Sequoyah Nuclear Plant

Updated

Final Safety Analysis Report

Amendment 30

TENNESSEE VALLEY AUTHORITY

Redacted
Version

EFFECTIVE PAGE LISTING

Page		Effective Amendment
1		26
2		24
3		27
4		18
	CHAPTER 1	
1-1		19
1-2		17
1-3		17
1.1-1		27
1.1-2		28
1.2-1		13
1.2-2		17
1.2-3		24
1.2-4		19
1.2-5		25
1.2-6		25
1.2-7		21
1.2-8		13
1.2-9		16
1.2-10		13
1.2-11		19
Figure 1.2.3-1		13
Figure 1.2.3-2		18
Figure 1.2.3-3		13
Figure 1.2.3-4		13
Figure 1.2.3-5		13
Figure 1.2.3-6		13
Figure 1.2.3-7		13
Figure 1.2.3-8		13
Figure 1.2.3-9		13
Figure 1.2.3-10		13
Figure 1.2.3-11		18
Figure 1.2.3-12		24
Figure 1.2.3-13		18
Figure 1.2.3-14		13
Figure 1.2.3-15		13
Figure 1.2.3-16		13
Figure 1.2.3-17		13
Figure 1.2.3-18		13
Figure 1.2.3-19		18
1.3-1		27
Table 1.3.1-1 (Sheet 1)		13
Table 1.3.1-1 (Sheet 2)		13
Table 1.3.1-1 (Sheet 3)		25
Table 1.3.1-1 (Sheet 4)		13
Table 1.3.1-1 (Sheet 5)		13

Note: The Effective Amendment designation indicates the affected page was either changed as a result of the Amendment or the page number was altered as a result of the Amendment.

EFFECTIVE PAGE LISTING

Page	Effective Amendment
Table 1.3.1-2 (Sheet 1)	24
Table 1.3.1-2 (Sheet 2)	24
Table 1.3.1-2 (Sheet 3)	13
Table 1.3.2-1 (Sheet 1)	24
Table 1.3.2-1 (Sheet 2)	13
Table 1.3.2-1 (Sheet 3)	13
Table 1.3.2-1 (Sheet 4)	17
Table 1.3.2-1 (Sheet 5)	13
Table 1.3.2-1 (Sheet 6)	13
Table 1.3.2-1 (Sheet 7)	13
Table 1.3.2-1 (Sheet 8)	13
Table 1.3.2-1 (Sheet 9)	18
1.4-1	24
1.5-1	13
1.5-2	13
1.5-3	13
1.5-4	13
1.5-5	13
1.5-6	13
1.5-7	13
1.5-8	13
1.5-9	13
1.5-10	13
1.5-11	13
1.5-12	13
1.5-13	13
1.5-14	13
1.6-1	17
Table 1.6.1-1 (Sheet 1)	13
Table 1.6.1-1 (Sheet 2)	13
Table 1.6.1-1 (Sheet 3)	13
Table 1.6.1-1 (Sheet 4)	13
Table 1.6.1-1 (Sheet 5)	13
Table 1.6.1-1 (Sheet 6)	13
Table 1.6.1-1 (Sheet 7)	13
Table 1.6.1-1 (Sheet 8)	13
Table 1.6.1-1 (Sheet 9)	13
Table 1.6.1-1 (Sheet 10)	13
Table 1.6.1-1 (Sheet 11)	13
Table 1.6.1-1 (Sheet 12)	24
Table 1.6.1-1 (Sheet 13)	24
1.7-1	17
1.7-2	13
1.7-3	13
1.7-4	28
1.7-5	26
1.7-6	27
1.7-7	24
1.7-8	24
1.7-9	24
1.7-10	13

EFFECTIVE PAGE LISTING

Page		Effective Amendment
1.7-11		13
1.8-1		13
	CHAPTER 2	
2-1		13
2-2		13
2-3		24
2-4		24
2-5		13
2-6		13
2-7		13
2-8		13
2-9		21
2-10		13
2-11		13
2-12		17
2-13		13
2-14		13
2-15		13
2-16		17
2-17		13
2-18		17
2-19		17
2-20		13
2-21		13
2.1-1		20
2.1-2		13
2.1-3		13
2.1-4		13
2.1-5		13
2.1-6		19
Table 2.1.1-1		1
Table 2.1.3-1		13
Table 2.1.3-2		13
Table 2.1.3-3		13
Table 2.1.3-4		13
Table 2.1.3-5		13
Table 2.1.3-6		13
Table 2.1.3-6a		13
Table 2.1.3-7		13
Table 2.1.3-8		13
Table 2.1.3-9		13
Table 2.1.3-10		13
Table 2.1.3-11		13
Table 2.1.3-12		13
Table 2.1.3-12a		13
Table 2.1.3-13		13
Table 2.1.3-14		13
Table 2.1.3-15		13
Table 2.1.3-16		13
Table 2.1.3-17		13
Table 2.1.3-18		13

EFFECTIVE PAGE LISTING

Page	Effective Amendment
Table 2.1.3-19	13
Table 2.1.3-20	21
Table 2.1.4-1	13
Table 2.1.4-2	13
Figure 2.1.1-1	13
Figure 2.1.1-2	13
Figure 2.1.1-3	Original
Figure 2.1.2-1	26
Figure 2.1.2-2	20
Figure 2.1.3-1	Original
Figure 2.1.4-1	Original
Figure 2.1.4-2	Original
2.2-1	13
2.2-2	13
2.2-3	13
2.2-4	16
2.2-5	13
2.2-6	13
2.2-7	16
2.2-8	13
2.2-9	26
Table 2.2.2-1	13
Table 2.2.2-1a	13
Table 2.2.2-1b	13
Table 2.2.3-1 (Sheet 1)	13
Table 2.2.3-1 (Sheet 2)	13
Table 2.2.3-2 (Sheet 1)	13
Table 2.2.3-2 (Sheet 2)	13
Table 2.2.3-3	13
2.3-1	13
2.3-2	18
2.3-3	21
2.3-4	18
2.3-5	18
2.3-6	18
2.3-7	15
2.3-8	24
2.3-9	23
2.3-10	24
2.3-11	23
2.3-12	28
2.3-13	20
2.3-14	13
2.3-15	13
2.3-16	21
2.3-17	21
2.3-18	23
2.3-19	23
Table 2.3.2-1	13
Table 2.3.2-2	13
Table 2.3.2-3	13

EFFECTIVE PAGE LISTING

Page	Effective Amendment
Table 2.3.2-4	13
Table 2.3.2-5	13
Table 2.3.2-6	13
Table 2.3.2-7	13
Table 2.3.2-8	13
Table 2.3.2-9	13
Table 2.3.2-10	13
Table 2.3.2-11	13
Table 2.3.2-12	13
Table 2.3.2-13	13
Table 2.3.2-14 (Sheet 1)	13
Table 2.3.2-14 (Sheet 2)	13
Table 2.3.2-15	13
Table 2.3.2-16	18
Table 2.3.2-17	13
Table 2.3.2-18	13
Table 2.3.2-19	13
Table 2.3.2-20	18
Table 2.3.2-21	13
Table 2.3.2-22	13
Table 2.3.2-23	13
Table 2.3.2-24	13
Table 2.3.2-25	13
Table 2.3.2-26	13
Table 2.3.2-27	13
Table 2.3.2-28	13
Table 2.3.2-29	13
Table 2.3.2-30	13
Table 2.3.2-31	13
Table 2.3.2-32	13
Table 2.3.2-33	13
Table 2.3.2-34	13
Table 2.3.2-35	13
Table 2.3.2-36	13
Table 2.3.2-37	13
Table 2.3.2-38	13
Table 2.3.2-39	13
Table 2.3.2-40	13
Table 2.3.2-41	13
Table 2.3.2-42	13
Table 2.3.2-43	13
Table 2.3.2-44	13
Table 2.3.2-45	13
Table 2.3.2-46	13
Table 2.3.2-47	13
Table 2.3.2-48	13
Table 2.3.2-49	13
Table 2.3.2-50	13
Table 2.3.2-51	13
Table 2.3.2-52	13
Table 2.3.2-53	13

EFFECTIVE PAGE LISTING

Page	Effective Amendment
Table 2.3.2-54	13
Table 2.3.2-55	13
Table 2.3.2-56	13
Table 2.3.2-57	13
Table 2.3.2-58	13
Table 2.3.4-1	13
Table 2.3.4-2	13
Table 2.3.4-3	13
Table 2.3.4-4	13
Table 2.3.4-5	13
Table 2.3.4-6	13
Table 2.3.4-7	13
Table 2.3.4-8	13
Table 2.3.4-9	13
Table 2.3.4-10	13
Table 2.3.4-11	13
Table 2.3.4-12	13
Table 2.3.4-13	13
Table 2.3.4-14	13
Figure 2.3.1-1	Original
Figure 2.3.1-2	Original
Figure 2.3.2-1	Original
Figure 2.3.2-2	Original
Figure 2.3.2-3	1
Figure 2.3.2-4	1
Figure 2.3.2-5	1
Figure 2.3.2-6	1
Figure 2.3.2-7	1
Figure 2.3.2-8	1
Figure 2.3.2-9	1
Figure 2.3.2-10	1
Figure 2.3.2-11	1
Figure 2.3.2-12	1
Figure 2.3.2-13	1
Figure 2.3.2-14	1
Figure 2.3.2-15	1
Figure 2.3.2-16	1
Figure 2.3.2-17	1
Figure 2.3.2-18	1
Figure 2.3.2-19	1
Figure 2.3.2-20	1
Figure 2.3.2-21	1
Figure 2.3.2-22	1
Figure 2.3.2-23 (Sheet 1)	Original
Figure 2.3.2-23 (Sheet 2)	Original
Figure 2.3.2-23 (Sheet 3)	Original
Figure 2.3.2-23 (Sheet 4)	Original
Figure 2.3.2-23 (Sheet 5)	Original
Figure 2.3.2-23 (Sheet 6)	Original
Figure 2.3.2-23 (Sheet 7)	Original
Figure 2.3.2-23 (Sheet 8)	Original

EFFECTIVE PAGE LISTING

Page	Effective Amendment
Figure 2.3.2-23 (Sheet 9)	Original
2.4-1	17
2.4-2	17
2.4-3	17
2.4-4	17
2.4-5	17
2.4-6	27
2.4-7	17
2.4-8	26
2.4-9	17
2.4-10	17
2.4-11	17
2.4-12	26
2.4-13	26
2.4-14	17
2.4-15	17
2.4-16	17
2.4-17	17
2.4-18	17
2.4-19	17
2.4-20	17
2.4-21	17
2.4-22	17
2.4-23	17
2.4-24	17
2.4-25	17
2.4-26	17
2.4-27	17
2.4-28	17
2.4-29	17
2.4-30	17
2.4-31	17
2.4-32	21
2.4-33	27
2.4-34	24
2.4-35	21
2.4-36	21
2.4-37	21
2.4-38	21
2.4-39	21
2.4-40	25
2.4-41	23
2.4-42	17
2.4-43	24
Table 2.4.1-1	17
Table 2.4.1-2	17
Table 2.4.1-3	17
Table 2.4.1-4	17
Table 2.4.1-5 (Sheet 1)	17
Table 2.4.1-5 (Sheet 2)	17
Table 2.4.3-1 (Sheet 1)	13

EFFECTIVE PAGE LISTING

Page	Effective Amendment
Table 2.4.3-1 (Sheet 2)	13
Table 2.4.3-2	13
Table 2.4.4-1	17
Table 2.4.13-1 (Sheet 1)	17
Table 2.4.13-1 (Sheet 2)	17
Table 2.4.13-1 (Sheet 3)	17
Table 2.4.13-2 (Sheet 1)	17
Table 2.4.13-2 (Sheet 2)	17
Table 2.4.13-2 (Sheet 3)	17
Table 2.4.13-2 (Sheet 4)	17
Figure 2.4.1-1	Original
Figure 2.4.1-2	17
Figure 2.4.1-3 (Sheet 1)	17
Figure 2.4.1-3 (Sheet 2)	17
Figure 2.4.1-3 (Sheet 3)	17
Figure 2.4.1-3 (Sheet 4)	17
Figure 2.4.1-3 (Sheet 5)	17
Figure 2.4.1-3 (Sheet 6)	17
Figure 2.4.1-3 (Sheet 7)	17
Figure 2.4.1-3 (Sheet 8)	17
Figure 2.4.1-3 (Sheet 9)	17
Figure 2.4.1-3 (Sheet 10)	17
Figure 2.4.1-3 (Sheet 11)	17
Figure 2.4.1-3 (Sheet 12)	17
Figure 2.4.1-3 (Sheet 13)	17
Figure 2.4.1-3 (Sheet 14)	17
Figure 2.4.2-1	17
Figure 2.4.3-1	17
Figure 2.4.3-2	17
Figure 2.4.3-3	17
Figure 2.4.3-4	17
Figure 2.4.3-5	17
Figure 2.4.3-6 (Sheet 1)	17
Figure 2.4.3-6 (Sheet 2)	17
Figure 2.4.3-6 (Sheet 3)	17
Figure 2.4.3-6 (Sheet 4)	17
Figure 2.4.3-6 (Sheet 5)	17
Figure 2.4.3-6 (Sheet 6)	17
Figure 2.4.3-6 (Sheet 7)	17
Figure 2.4.3-6 (Sheet 8)	17
Figure 2.4.3-6 (Sheet 9)	17
Figure 2.4.3-6 (Sheet 10)	17
Figure 2.4.3-6 (Sheet 11)	17
Figure 2.4.3-7	17
Figure 2.4.3-8	17
Figure 2.4.3-9	17
Figure 2.4.3-10	17
Figure 2.4.3-11	17
Figure 2.4.3-12	17
Figure 2.4.3-13a	26
Figure 2.4.3-14	Original

EFFECTIVE PAGE LISTING

Page	Effective Amendment
Figure 2.4.3-15	Original
Figure 2.4.3-16	Original
Figure 2.4.3-17	Original
Figure 2.4.4-1	6
Figure 2.4.4-2	17
Figure 2.4.4-3	17
Figure 2.4.4-4	Original
Figure 2.4.4-5	17
Figure 2.4.4-6	6
Figure 2.4.4-7	1
Figure 2.4.4-8	Original
Figure 2.4.4-9	Original
Figure 2.4.4-10	Original
Figure 2.4.4-11	17
Figure 2.4.4-12	Original
Figure 2.4.4-13	17
Figure 2.4.4-14	17
Figure 2.4.4-15	Original
Figure 2.4.4-16	Original
Figure 2.4.4-17	Original
Figure 2.4.4-18	Original
Figure 2.4.4-21	17
Figure 2.4.4-24	Original
Figure 2.4.4-25	17
Figure 2.4.4-26	Original
Figure 2.4.4-27	Original
Figure 2.4.4-28	Original
Figure 2.4.4-29	Original
Figure 2.4.4-30	17
Figure 2.4.4-31	Original
Figure 2.4.4-37	17
Figure 2.4.4-38	17
Figure 2.4.4-39	17
Figure 2.4.8-1	17
Figure 2.4.13-1	6
Figure 2.4.13-2	6
2.4A-i	13
2.4A-ii	13
2.4A-iii	17
2.4A-1	17
2.4A-2	27
2.4A-3	17
2.4A-4	21
2.4A-5	23
2.4A-6	17
2.4A-7	27
2.4A-8	13
2.4A-9	13
2.4A-10	17
2.4A-11	17
2.4A-12	17

EFFECTIVE PAGE LISTING

Page	Effective Amendment
2.4A-13	17
2.4A-14	17
2.4A-15	17
2.4A-16	24
Table 2.4A-2	17
Figure 2.4A-2	28
Figure 2.4A-3	28
Figure 2.4A-4	17
2.5-1	13
2.5-2	13
2.5-3	13
2.5-4	13
2.5-5	13
2.5-6	13
2.5-7	13
2.5-8	13
2.5-9	13
2.5-10	13
2.5-11	13
2.5-12	13
2.5-13	13
2.5-14	13
2.5-15	13
2.5-16	13
2.5-17	13
2.5-18	13
2.5-19	13
2.5-20	13
2.5-21	13
2.5-22	13
2.5-23	13
2.5-24	13
2.5-25	13
2.5-26	13
2.5-27	13
2.5-28	13
2.5-29	13
2.5-30	13
2.5-31	13
2.5-32	13
Table 2.5.1-1	13
Table 2.5.1-2 (Sheet 1)	13
Table 2.5.1-2 (Sheet 2)	13
Table 2.5.1-3	13
Table 2.5.1-4	13
Table 2.5.1-5	13
Table 2.5.1-6	13
Table 2.5.1-7	13
Table 2.5.1-8	13
Table 2.5.1-9	13
Table 2.5.1-10	13

EFFECTIVE PAGE LISTING

Page	Effective Amendment
Table 2.5.1-11 (Sheet 1)	13
Table 2.5.1-11 (Sheet 2)	13
Table 2.5.1-12	13
Table 2.5.1-13 (Sheet 1)	13
Table 2.5.1-13 (Sheet 2)	13
Table 2.5.1-14	13
Table 2.5.2-1 (Sheet 1)	13
Table 2.5.2-1 (Sheet 2)	13
Table 2.5.2-1 (Sheet 3)	13
Table 2.5.2-1 (Sheet 4)	13
Table 2.5.2-1 (Sheet 5)	13
Table 2.5.2-1 (Sheet 6)	13
Figure 2.5.1-1	Original
Figure 2.5.1-2	Original
Figure 2.5.1-3	Original
Figure 2.5.1-4	Original
Figure 2.5.1-5	Original
Figure 2.5.1-6	Original
Figure 2.5.1-7	Original
Figure 2.5.1-8	Original
Figure 2.5.1-9	Original
Figure 2.5.1-10	Original
Figure 2.5.1-11	Original
Figure 2.5.1-12	23
Figure 2.5.1-12a	13
Figure 2.5.1-12b	13
Figure 2.5.1-13	13
Figure 2.5.1-13a	13
Figure 2.5.1-14	Original
Figure 2.5.1-15	Original
Figure 2.5.2-1	Original
Figure 2.5.2-2	Original
Figure 2.5.2-3	Original
Figure 2.5.2-4	Original
Figure 2.5.2-5	Original
Figure 2.5.2-6	Original
Figure 2.5.2-7	Original
Figure 2.5.2-8	Original
Figure 2.5.2-9	Original
Figure 2.5.2-10	Original
Figure 2.5.2-11	Original
Figure 2.5.2-12	Original
Figure 2.5.2-13	Original
Figure 2.5.2-14	Original
Figure 2.5.5-1	Original
Figure 2.5.6-1	6
Figure 2.5.6-2	Original
2.6-1	13
Table 2.6-1	13
CHAPTER 3	
3-1	13

EFFECTIVE PAGE LISTING

Page	Effective Amendment
3-2	26
3-3	13
3-4	16
3-5	13
3-6	13
3-7	26
3-8	26
3-9	18
3-10	13
3-11	24
3-12	24
3-13	25
3-14	25
3-15	18
3-16	13
3-17	13
3-18	13
3-19	18
3-20	18
3-21	13
3-22	13
3.1-1	13
3.1-2	13
3.1-3	13
3.1-4	13
3.1-5	13
3.1-6	13
3.1-7	13
3.1-8	13
3.1-9	29
3.1-10	13
3.1-11	13
3.1-12	13
3.1-13	13
3.1-14	13
3.1-15	13
3.1-16	13
3.1-17	13
3.1-18	18
3.1-19	13
3.1-20	13
3.1-21	13
3.1-22	13
3.1-23	13
3.1-24	20
3.1-25	20
3.1-26	13
3.1-27	13
3.1-28	21
3.1-29	13
3.1-30	13

EFFECTIVE PAGE LISTING

Page	Effective Amendment
3.1-31	13
3.1-32	13
3.1-33	18
3.2-1	13
3.2-2	15
3.2-3	13
3.2-4	30
3.2-5	30
Table 3.2.1-1	26
Table 3.2.1-2 (Sheet 1)	26
Table 3.2.1-2 (Sheet 2)	13
Table 3.2.1-2 (Sheet 3)	13
Table 3.2.1-2 (Sheet 4)	23
Table 3.2.1-2 (Sheet 5)	26
Table 3.2.1-2 (Sheet 6)	13
Table 3.2.1-2 (Sheet 7)	13
Table 3.2.1-2 (Sheet 8)	13
Table 3.2.1-2 Notes (Sheet 9)	18
Table 3.2.1-2 Notes (Sheet 10)	19
Table 3.2.1-2 Notes (Sheet 11)	13
Table 3.2.1-3 (Sheet 1)	18
Table 3.2.1-3 (Sheet 2)	13
Table 3.2.1-3 (Sheet 3)	13
Table 3.2.1-3 (Sheet 4)	30
Table 3.2.1-3 (Sheet 5)	30
Table 3.2.2-1	13
Table 3.2.2-2 (Sheet 1)	13
Table 3.2.2-2 (Sheet 2)	13
Table 3.2.2-3 (Sheet 1)	13
Table 3.2.2-3 (Sheet 2)	13
Table 3.2.2-3 (Sheet 3)	19
3.3-1	21
3.3-2	26
3.3-3	25
3.3-4	13
Figure 3.3.2-1	Original
3.4-1	13
3.5-1	13
3.5-2	13
3.5-3	13
3.5-4	13
3.5-5	13
3.5-6	13
3.5-7	13
3.5-8	13
3.5-9	13
3.5-10	13
3.5-11	26
3.5-12	13
3.5-13	13
3.5-14	13

EFFECTIVE PAGE LISTING

Page	Effective Amendment
3.5-15	13
3.5-16	21
3.5-17	13
3.5-18	13
3.5-19	13
3.5-20	13
3.5-21	19
3.5-22	13
3.5-23	23
3.5-24	13
Table 3.5.1-1 (Sheet 1)	13
Table 3.5.1-1 (Sheet 2)	26
Table 3.5.2-1	25
Table 3.5.5-1	13
Table 3.5.5-2	26
Table 3.5.5-3 (Sheet 1)	13
Table 3.5.5-3 (Sheet 2)	13
Table 3.5.5-3 (Sheet 3)	13
Table 3.5.5-4	13
Table 3.5.5-5	13
Figure 3.5.2-1	6
Figure 3.5.2-2	Original
Figure 3.5.2-3	Original
Figure 3.5.4-1	Original
Figure 3.5.4-2	Original
Figure 3.5.4-3	Original
Figure 3.5.4-4	Original
3.6-1	29
3.6-2	13
3.6-3	13
3.6-4	13
3.6-5	13
3.6-6	13
3.6-7	13
3.6-8	13
3.6-9	18
3.6-10	13
3.6-11	13
3.6-12	13
3.6-13	13
3.6-14	13
3.6-15	13
3.6-16	13
3.6-17	13
3.6-18	18
3.6-19	24
3.6-20	13
3.6-21	13
3.6-22	13
3.6-23	30
3.6-24	13

EFFECTIVE PAGE LISTING

Page	Effective Amendment
3.6-25	24
Table 3.6.1-1 (Sheet 1)	21
Table 3.6.1-1 (Sheet 2)	21
Table 3.6.1-1 (Sheet 3)	21
Table 3.6.2-1	18
Table 3.6.7-1	18
Table 3.6.7-2	13
Table 3.6.7-3	13
Figure 3.6.1-1	13
Figure 3.6.2-1	18
Figure 3.6.4-2	Original
Figure 3.6.7-1	18
Figure 3.6.7-2	18
3.7-1	13
3.7-2	17
3.7-3	13
3.7-4	13
3.7-5	13
3.7-6	13
3.7-7	25
3.7-8	13
3.7-9	13
3.7-10	24
3.7-10a	18
3.7-11	13
3.7-12	13
3.7-13	13
3.7-14	13
3.7-15	13
3.7-16	13
3.7-17	13
3.7-18	13
3.7-19	13
3.7-20	13
3.7-21	13
3.7-22	13
3.7-23	26
3.7-24	18
3.7-25	13
3.7-26	18
3.7-27	17
3.7-28	13
3.7-29	25
3.7-29a	18
3.7-30	13
3.7-31	13
3.7-32	13
3.7-33	13
3.7-34	13
3.7-35	19
3.7-35a	19

EFFECTIVE PAGE LISTING

Page	Effective Amendment
3.7-36	16
3.7-37	16
3.7-38	16
3.7-39	16
3.7-40	22
3.7-41	13
3.7-42	26
Table 3.7.1-1	13
Table 3.7.1-2	13
Table 3.7.1-3 (Sheet 1)	13
Table 3.7.1-3 (Sheet 2)	13
Table 3.7.1-3A (Sheet 1)	13
Table 3.7.1-3A (Sheet 2)	13
Table 3.7.1-4	13
Table 3.7.1-5	13
Table 3.7.2-1	13
Table 3.7.2-2 (Sheet 1)	16
Table 3.7.2-2 (Sheet 2)	13
Table 3.7.2-6	13
Table 3.7.2-7	13
Table 3.7.2-10	13
Table 3.7.2-11	13
Table 3.7.2-12	13
Table 3.7.2-13	13
Table 3.7.2-14	25
Table 3.7.2-15	13
Table 3.7.2-16	13
Table 3.7.2-17	13
Table 3.7.2-18	13
Table 3.7.2-19	13
Table 3.7.2-20	13
Table 3.7.2-21	13
Table 3.7.2-22	13
Table 3.7.2-23	13
Table 3.7.2-24	13
Table 3.7.2-25	25
Table.3.7.2-26	13
Table 3.7.2-27	13
Table 3.7.2-28	13
Table 3.7.2-29	13
Table 3.7.2-30	13
Table 3.7.2-31	25
Table 3.7.2-32	13
Table 3.7.2-33	13
Table 3.7.2-34	25
Table 3.7.2-35	13
Table 3.7.2-36	13
Table 3.7.2-37	13
Table 3.7.2-38	13
Table 3.7.2-39	13
Table 3.7.2-40	13

EFFECTIVE PAGE LISTING

Page	Effective Amendment
Table 3.7.2-41	13
Table 3.7.2-42	13
Table 3.7.2-43	13
Table 3.7.2-44	13
Table 3.7.2-45	13
Figure 3.7.1-1	13
Figure 3.7.1-2	13
Figure 3.7.2-1	Original
Figure 3.7.2-2	Original
Figure 3.7.2-3	Original
Figure 3.7.2-4	Original
Figure 3.7.2-5	Original
Figure 3.7.2-6	Original
Figure 3.7.2-7	Original
Figure 3.7.2-8	Original
Figure 3.7.2-9	Original
Figure 3.7.2-10	Original
Figure 3.7.2-11	Original
Figure 3.7.2-12	Original
Figure 3.7.2-13	Original
Figure 3.7.2-14	Original
Figure 3.7.2-15	Original
Figure 3.7.2-16	Original
Figure 3.7.2-17	Original
Figure 3.7.2-18	Original
Figure 3.7.2-19	Original
Figure 3.7.2-20	Original
Figure 3.7.2-21	Original
Figure 3.7.2-22	Original
Figure 3.7.2-23	Original
Figure 3.7.2-24	Original
Figure 3.7.2-25	Original
Figure 3.7.2-26	Original
Figure 3.7.2-27	Original
Figure 3.7.2-28	Original
Figure 3.7.2-29	Original
Figure 3.7.2-30	Original
Figure 3.7.2-31	Original
Figure 3.7.2-32	Original
Figure 3.7.2-33	Original
Figure 3.7.2-34	Original
Figure 3.7.2-35	Original
Figure 3.7.2-36	Original
Figure 3.7.2-37	Original
Figure 3.7.2-38	Original
Figure 3.7.2-39	Original
Figure 3.7.2-40	Original
Figure 3.7.2-41	Original
Figure 3.7.2-42	Original
Figure 3.7.2-43	Original
Figure 3.7.2-44	Original

EFFECTIVE PAGE LISTING

Page	Effective Amendment
Figure 3.7.2-45	Original
Figure 3.7.2-46	Original
Figure 3.7.2-47	Original
Figure 3.7.2-48	6
Figure 3.7.2-49	Original
Figure 3.7.2-50	Original
Figure 3.7.2-51	Original
Figure 3.7.2-52	Original
Figure 3.7.2-53	Original
Figure 3.7.2-54	6
Figure 3.7.2-55	6
Figure 3.7.2-56	6
Figure 3.7.2-57	6
Figure 3.7.2-58	6
Figure 3.7.2-59	6
Figure 3.7.2-60	6
Figure 3.7.2-61	6
Figure 3.7.2-62	6
Figure 3.7.2-63	6
Figure 3.7.2-64	6
Figure 3.7.2-65	6
Figure 3.7.2-66	6
Figure 3.7.2-67	6
Figure 3.7.2-68	6
Figure 3.7.2-69	6
Figure 3.7.2-70	6
Figure 3.7.2-71	6
Figure 3.7.2-72	6
Figure 3.7.2-73	6
Figure 3.7.2-74	6
Figure 3.7.2-75	6
Figure 3.7.2-76	6
Figure 3.7.2-77	Original
Figure 3.7.2-78	Original
Figure 3.7.2-79	18
3.8-1	20
3.8-2	24
3.8-3	23
3.8-4	13
3.8-5	17
3.8-6	13
3.8-7	13
3.8-8	13
3.8-9	13
3.8-10	13
3.8-11	13
3.8-12	24
3.8-13	24
3.8-14	13
3.8-15	24
3.8-16	13

EFFECTIVE PAGE LISTING

Page	Effective Amendment
3.8-17	21
3.8-18	13
3.8-19	13
3.8-20	13
3.8-21	13
3.8-22	24
3.8-23	13
3.8-24	20
3.8-25	13
3.8-26	13
3.8-27	13
3.8-28	13
3.8-29	13
3.8-30	13
3.8-31	21
3.8-32	13
3.8-33	13
3.8-34	13
3.8-35	13
3.8-36	13
3.8-37	13
3.8-38	13
3.8-39	21
3.8-40	13
3.8-41	13
3.8-42	13
3.8-43	26
3.8-44	26
3.8-45	24
3.8-46	13
3.8-47	24
3.8-48	13
3.8-49	17
3.8-50	18
3.8-51	17
3.8-52	13
3.8-53	13
3.8-54	13
3.8-55	13
3.8-56	13
3.8-57	13
3.8-58	24
3.8-58a	18
3.8-59	13
3.8-60	13
3.8-61	13
3.8-62	13
3.8-63	13
3.8-64	13
3.8-65	16
3.8-66	13

EFFECTIVE PAGE LISTING

Page	Effective Amendment
3.8-67	13
3.8-68	13
3.8-69	13
3.8-70	13
3.8-71	13
3.8-72	18
3.8-73	13
3.8-74	13
3.8-75	19
3.8-76	13
3.8-77	23
3.8-78	13
3.8-79	23
3.8-80	26
3.8-81	13
3.8-82	13
3.8-83	13
3.8-84	13
3.8-85	13
3.8-86	13
3.8-87	13
3.8-88	19
3.8-89	13
3.8-90	13
3.8-91	13
3.8-92	13
3.8-93	13
3.8-94	13
3.8-95	13
3.8-96	13
3.8-97	13
3.8-98	13
3.8-99	13
3.8-100	13
3.8-101	13
3.8-102	13
3.8-103	13
3.8-104	13
3.8-105	13
3.8-106	13
3.8-107	23
3.8-108	28
3.8-109	13
3.8-110	13
3.8-111	28
3.8-112	19
3.8-113	19
3.8-114	13
Table 3.8.1-1	13
Table 3.8.1-2	13
Table 3.8.2-1 (Sheet 1)	13

EFFECTIVE PAGE LISTING

Page	Effective Amendment
Table 3.8.2-1 (Sheet 2)	13
Table 3.8.2-2 (Sheet 1)	13
Table 3.8.2-2 (Sheet 2)	13
Table 3.8.2-2 (Sheet 3)	13
Table 3.8.3-1	13
Table 3.8.3-2	13
Table 3.8.3-2A	24
Table 3.8.3-3	13
Table 3.8.3-4 (Sheet 1)	13
Table 3.8.3-4 (Sheet 2)	13
Table 3.8.3-4 (Sheet 3)	13
Table 3.8.3-5	13
Table 3.8.3-6	13
Table 3.8.3-7	13
Table 3.8.3-8	21
Table 3.8.3-9	13
Table 3.8.3-10 (Sheet 1)	13
Table 3.8.3-10 (Sheet 2)	13
Table 3.8.3-11	13
Table 3.8.4.1 (Sheet 1)	13
Table 3.8.4-1 (Sheet 2)	21
Table 3.8.4-1 (Sheet 3)	21
Table 3.8.4-1 (Sheet 4)	13
Table 3.8.4-1 (Sheet 5)	13
Table 3.8.4-2 (Sheet 1)	13
Table 3.8.4-2 (Sheet 2)	13
Table 3.8.4-2 (Sheet 3)	13
Table 3.8.4-3 (Sheet 1)	13
Table 3.8.4-3 (Sheet 2)	13
Table 3.8.4-4	13
Table 3.8.4-5	13
Table 3.8.4-6	13
Table 3.8.4-7	13
Table 3.8.4-8 (Sheet 1)	13
Table 3.8.4-8 (Sheet 2)	13
Table 3.8.4-9 (Sheet 1)	13
Table 3.8.4-9 (Sheet 2)	13
Table 3.8.4-10	13
Table 3.8.4-11	13
Table 3.8.4-12	13
Table 3.8.4-13	13
Table 3.8.4-14 (Sheet 1)	13
Table 3.8.4-14 (Sheet 2)	13
Table 3.8.4-15 (Sheet 1)	13
Table 3.8.4-15 (Sheet 2)	13
Table 3.8.4-16	13
Table 3.8.4-17 (Sheet 1)	13
Table 3.8.4-17 (Sheet 2)	13
Table 3.8.4-18	13
Table 3.8.6-1 (Sheet 1)	13
Table 3.8.6-1 (Sheet 2)	13

EFFECTIVE PAGE LISTING

Page	Effective Amendment
Figure 3.8.1-1	13
Figure 3.8.2-1	13
Figure 3.8.2-2	13
Figure 3.8.2-3	13
Figure 3.8.2-4	13
Figure 3.8.2-5	13
Figure 3.8.2-6	13
Figure 3.8.2-7	27
Figure 3.8.2-8	13
Figure 3.8.2-9	13
Figure 3.8.2-10	13
Figure 3.8.2-11	13
Figure 3.8.3-1	13
Figure 3.8.3-2	13
Figure 3.8.4-1	23
Figure 3.8.4-2	13
Figure 3.8.4-3	13
Figure 3.8.4-4	13
Figure 3.8.4-5	13
Figure 3.8.4-6	13
Figure 3.8.4-7	19
Figure 3.8.4-8	13
Figure 3.8.4-9	19
Figure 3.8.4-10	13
Figure 3.8.4-11	13
Figure 3.8.6-1	13
Figure 3.8.6-2	13
Figure 3.8.6-3	28
Figure 3.8.6-4	13
Figure 3.8.6-5	28
Figure 3.8.6-6	18
Figure 3.8.6-7	18
Figure 3.8.6-8	18
Figure 3.8.6-9	13
Figure 3.8.6-10	13
Figure 3.8.6-11	13
Figure 3.8.6-12	Original
3.8A-1	13
3.8A-2	13
Figure 3.8A-1	6
Figure 3.8A-2	6
3.8B-1	13
3.8B-2	13
3.8B-3	13
3.8B-4	13
3.8B-5	13
3.8B-6	13
3.8C-1	13
3.8C-2	13
Figure 3.8C-1	Original
Figure 3.8C-2	6

EFFECTIVE PAGE LISTING

Page	Effective Amendment
Figure 3.8C-3	6
Figure 3.8C-4	6
3.8D-1	13
3.8D-2	13
3.8D-3	13
Table 3.8D-1	13
Table 3.8D-2	13
Table 3.8D-3	13
Table 3.8D-4	13
Table 3.8D-5	13
Table 3.8D-6	13
Table 3.8D-7	13
Table 3.8D-8	13
Figure 3.8D-1	Original
Figure 3.8D-2	Original
3.8E-1	13
3.8E-2	13
3.8E-3	13
3.8E-4	13
3.8E-5	13
Figure 3.8E-1	Original
3.9-1	13
3.9-2	13
3.9-3	13
3.9-4	13
3.9-5	13
3.9-6	13
3.9-7	13
3.9-8	13
3.9-9	13
3.9-10	13
3.9-11	13
3.9-12	13
3.9-13	13
3.9-14	13
3.9-15	18
3.9-16	18
3.9-17	13
3.9-18	26
3.9-19	13
3.9-20	13
3.9-21	13
3.9-22	13
3.9-23	13
3.9-24	13
3.9-25	13
3.9-26	13
3.9-27	13
3.9-28	13
3.9-29	13
3.9-30	13

EFFECTIVE PAGE LISTING

Page	Effective Amendment
3.9-31	13
3.9-32	13
3.9-33	13
3.9-34	21
3.9-35	13
3.9-36	13
3.9-37	13
3.9-38	13
3.9-39	13
3.9-40	13
3.9-41	13
3.9-42	14
Table 3.9.2-1	26
Table 3.9.2-2	13
Table 3.9.2-3	22
Table 3.9.2-3a	22
Table 3.9.2-4 (Sheet 1)	13
Table 3.9.2-4 (Sheet 2)	13
Table 3.9.2-5 (Sheet 1)	14
Table 3.9.2-5 (Sheet 2)	14
Table 3.9.3-1	13
Figure 3.9.1-1	Original
Figure 3.9.1-2	Original
Figure 3.9.1-3	Original
Figure 3.9.1-4	Original
Figure 3.9.1-5 (Sheet 1)	Original
Figure 3.9.1-5 (Sheet 2)	Original
Figure 3.9.1-6	6
Figure 3.9.1-7	Original
Figure 3.9.1-8	18
Figure 3.9.2-1	10
3.10-1	13
3.10-2	13
3.10-3	13
3.10-4	13
3.10-5	13
3.10-6	13
3.10-7	13
3.10-8	13
3.10-9	13
Table 3.10.2-1	13
3.11-1	13
3.11-2	13
Table 3.11.1-1 (Sheet 1)	20
Table 3.11.1-1 (Sheet 2)	13
3.12-1	21
3.12-2	21
3.12-3	21
3.12-4	21
3.12-5	21
3.12-6	21

EFFECTIVE PAGE LISTING

Page		Effective Amendment
3.12-7		21
3.13-1		26
	CHAPTER 4	
4-1		24
4-2		13
4-3		24
4-4		17
4-5		13
4-6		13
4-7		13
4-8		13
4-9		16
4-10		24
4.1-1		28
4.1-2		18
4.1-3		13
Table 4.1-1 (Sheet 1)		13
Table 4.1-1 (Sheet 2)		13
Table 4.1-1 (Sheet 3)		30
Table 4.1-2 (Sheet 1)		13
Table 4.1-2 (Sheet 2)		13
Table 4.1-2 (Sheet 3)		13
Table 4.1-3		13
4.2-1		13
4.2-2		13
4.2-3		13
4.2-4		13
4.2-5		13
4.2-6		13
4.2-7		13
4.2-8		13
4.2-9		13
4.2-10		13
4.2-11		13
4.2-12		13
4.2-13		13
4.2-14		13
4.2-15		13
4.2-16		13
4.2-17		13
4.2-18		13
4.2-19		13
4.2-20		13
4.2-21		13
4.2-22		13
4.2-23		13
4.2-24		13
4.2-25		13
4.2-26		13
4.2-27		13
4.2-28		13

EFFECTIVE PAGE LISTING

Page	Effective Amendment
4.2-29	13
4.2-30	28
4.2-31	18
4.2-32	13
4.2-33	13
4.2-34	28
4.2-35	13
4.2-36	18
4.2-37	18
4.2-38	18
4.2-39	13
4.2-40	13
4.2-41	13
4.2-42	28
4.2-43	28
4.2-44	17
4.2-45	17
4.2-46	13
4.2-47	13
4.2-48	13
4.2-49	13
4.2-50	13
4.2-51	13
4.2-52	17
4.2-53	17
Table 4.2.2-1	13
Figure 4.2.1-1	6
Figure 4.2.1-2	Original
Figure 4.2.1-2A	8
Figure 4.2.1-3	Original
Notes on Figure 4.2.1-3	13
Figure 4.2.1-3A	8
Figure 4.2.1-4	Original
Figure 4.2.1-5	Original
Figure 4.2.1-6a	Original
Figure 4.2.1-6b	Original
Figure 4.2.1-7a	8
Figure 4.2.1-7B	8
Figure 4.2.1-7c	Original
Figure 4.2.1-8	Original
Figure 4.2.1-9	13
Figure 4.2.1-10	13
Figure 4.2.1-11	13
Figure 4.2.1-12	13
Figure 4.2.2-1	Original
Figure 4.2.2-2	Original
Figure 4.2.2-3	Original
Figure 4.2.2-4	Original
Figure 4.2.2-5	Original
Figure 4.2.3-1	17
Figure 4.2.3-2	Original

EFFECTIVE PAGE LISTING

Page	Effective Amendment
Figure 4.2.3-2A	Original
Figure 4.2.3-3	Original
Figure 4.2.3-3A	Original
Figure 4.2.3-3B	Original
Figure 4.2.3-3C	Original
Figure 4.2.3-4	Original
Figure 4.2.3-5a	10
Figure 4.2.3-5b	10
Figure 4.2.3-6	1
Figure 4.2.3-7	Original
Figure 4.2.3-8	Original
Figure 4.2.3-9	Original
Figure 4.2.3-10	Original
4.3-1	13
4.3-2	13
4.3-3	27
4.3-4	26
4.3-5	13
4.3-6	13
4.3-7	13
4.3-8	13
4.3-9	13
4.3-10	13
4.3-11	13
4.3-12	13
4.3-13	13
4.3-14	13
4.3-15	26
4.3-16	13
4.3-17	13
4.3-18	13
4.3-19	15
4.3-20	13
4.3-21	13
4.3-22	13
4.3-23	13
4.3-24	13
4.3-25	17
4.3-26	26
4.3-27	26
4.3-28	16
4.3-29	16
4.3-30	16
4.3-31	13
4.3-32	13
4.3-33	13
4.3-34	13
4.3-35	13
4.3-36	13
4.3-37	13
4.3-38	13

EFFECTIVE PAGE LISTING

Page	Effective Amendment
4.3-39	13
4.3-40	16
Table 4.3.2-1 (Sheet 1)	25
Table 4.3.2-1 (Sheet 2)	13
Table 4.3.2-2	13
Table 4.3.2-3	30
Table 4.3.2-4	13
Table 4.3.2-5	13
Table 4.3.2-6	13
Table 4.3.2-7	13
Table 4.3.2-8	13
Table 4.3.2-9	13
Table 4.3.2-10	13
Table 4.3.2-11	6
Figure 4.3.2-1	Original
Figure 4.3.2-2	Original
Figure 4.3.2-3	Original
Figure 4.3.2-4	Original
Figure 4.3.2-5	Original
Figure 4.3.2-6	10
Figure 4.3.2-7	10
Figure 4.3.2-8	10
Figure 4.3.2-9	6
Figure 4.3.2-10	10
Figure 4.3.2-11	10
Figure 4.3.2-12	Original
Figure 4.3.2-13	Original
Figure 4.3.2-14	Original
Figure 4.3.2-15	Original
Figure 4.3.2-16	Original
Figure 4.3.2-17	Original
Figure 4.3.2-18	Original
Figure 4.3.2-19	Original
Figure 4.3.2-20	Original
Figure 4.3.2-21	13
Figure 4.3.2-22	13
Figure 4.3.2-23	13
Figure 4.3.2-24	10
Figure 4.3.2-25	Original
Figure 4.3.2-26	Original
Figure 4.3.2-27	Original
Figure 4.3.2-28	Original
Figure 4.3.2-29	Original
Figure 4.3.2-30	Original
Figure 4.3.2-31	Original
Figure 4.3.2-32	Original
Figure 4.3.2-33	Original
Figure 4.3.2-34	Original
Figure 4.3.2-35	Original
Figure 4.3.2-36	30
Figure 4.3.2-37	Original

EFFECTIVE PAGE LISTING

Page	Effective Amendment
Figure 4.3.2-38	Original
Figure 4.3.2-39	Original
Figure 4.3.2-40	8
Figure 4.3.2-41	Original
Figure 4.3.2-42	Original
Figure 4.3.2-43	Original
Figure 4.3.2-44	Original
Figure 4.3.2-45	Original
Figure 4.3.2-46	Original
4.4-1	13
4.4-2	13
4.4-3	29
4.4-4	16
4.4-5	13
4.4-6	13
4.4-7	17
4.4-8	13
4.4-9	13
4.4-10	13
4.4-11	13
4.4-12	13
4.4-13	13
4.4-14	13
4.4-15	13
4.4-16	29
4.4-17	13
4.4-18	29
4.4-19	13
4.4-20	13
4.4-21	13
4.4-22	13
4.4-23	13
4.4-24	13
4.4-25	13
4.4-26	13
4.4-27	13
4.4-28	13
4.4-29	13
4.4-30	13
4.4-31	13
4.4-32	13
4.4-33	13
4.4-34	13
4.4-35	13
4.4-36	13
Table 4.4.2-1	13
Table 4.4.2-2	13
Table 4.4.2-3	13
Figure 4.4.2-3	Original
Figure 4.4.2-4	13
Figure 4.4.2-5	13

EFFECTIVE PAGE LISTING

Page	Effective Amendment
Figure 4.4.2-6	Original
Figure 4.4.2-7	10
Figure 4.4.2-8	10
Figure 4.4.2-9	10
Figure 4.4.2-10	Original
Figure 4.4.5-1	30
4.5-1	24
4.5-2	24
4.5-3	24
4.5-4	24
4.5-5	24
4.5-6	24
4.5-7	24
4.5-8	24
4.5-9	24
4.5-10	24
4.5-11	24
4.5-12	24
4.5-13	24
4.5-14	24
4.5-15	24
4.5-16	24
4.5-17	24
4.5-18	24
4.5-19	24
4.5-20	24
4.5-21	24
4.5-22	24
4.5-23	24
4.5-24	24
4.5-25	24
4.5-26	24
4.5-27	24
4.5-28	24
4.5-29	24
4.5-30	24
4.5-31	24
4.5-32	24
4.5-33	24
4.5-34	27
4.5-35	26
4.5-36	24
4.5-37	24
4.5-38	24
4.5-39	24
4.5-40	24
4.5-41	24
4.5-42	24
4.5-43	24
4.5-44	24
4.5-45	24

EFFECTIVE PAGE LISTING

Page	Effective Amendment
4.5-46	29
4.5-47	24
4.5-48	24
4.5-49	24
4.5-50	24
4.5-51	24
4.5-52	24
4.5-53	24
4.5-54	24
4.5-55	24
4.5-56	24
4.5-57	29
4.5-58	29
4.5-59	24
4.5-60	24
4.5-61	24
4.5-62	24
4.5-63	26
4.5-64	24
4.5-65	24
Table 4.5.1-1	24
Table 4.5.1-2	24
Table 4.5.1-3	13
Table 4.5.2-1	13
Table 4.5.2-2	25
Table 4.5.2-3	25
Table 4.5.3-1	24
Table 4.5.4.2-1 (Sheet 1)	29
Table 4.5.4.2-1 (Sheet 2)	29
Figure 4.5.2-1	16
Figure 4.5.2-2	13
Figure 4.5.2-3	13
Figure 4.5.2-4	13
Figure 4.5.2-5A	16
Figure 4.5.2-5B	16
Figure 4.5.2-6	16
Figure 4.5.2-7A	16
Figure 4.5.2-7B	16
Figure 4.5.2-8A	16
Figure 4.5.2-8B	16
Figure 4.5.2-9	13
Figure 4.5.2-10	13
Figure 4.5.2-11	13
Figure 4.5.2-12	13
Figure 4.5.2-13	13
Figure 4.5.2-14	13
Figure 4.5.2-15	16
Figure 4.5.2-16a	24
Figure 4.5.2-16b	24
Figure 4.5.2-17	24
Figure 4.5.2-18	24

EFFECTIVE PAGE LISTING

Page	Effective Amendment
Figure 4.5.2-19	24
Figure 4.5.2-20	24
Figure 4.5.2-21	24
Figure 4.5.2-22	24
Figure 4.5.2-23	24
Figure 4.5.2-24	24
Figure 4.5.2-25	24
Figure 4.5.2-26	24
Figure 4.5.2-27	24
Figure 4.5.4.2-7	24
Figure 4.5.4.2-8	24
Figure 4.5.4.2-9	24
CHAPTER 5	
5-1	18
5-2	18
5-3	25
5-4	18
5-5	26
5-6	13
5-7	25
5-8	18
5.1-1	18
5.1-2	24
5.1-3	13
5.1-4	20
5.1-4a	20
5.1-5	13
5.1-6	28
5.1-7	28
5.1-8	20
Table 5.1-1 (Sheet 1)	24
Table 5.1-1 (Sheet 2)	24
Figure 5.1-1	27
Figure 5.1-2	13
Figure 5.1-3	13
5.2-1	18
5.2-2	25
5.2-3	18
5.2-4	18
5.2-5	18
5.2-6	18
5.2-7	18
5.2-8	18
5.2-9	24
5.2-10	28
5.2-11	18
5.2-12	24
5.2-13	18
5.2-14	18
5.2-15	24
5.2-16	24

EFFECTIVE PAGE LISTING

Page	Effective Amendment
5.2-17	18
5.2-18	18
5.2-19	25
5.2-20	18
5.2-21	25
5.2-22	18
5.2-23	25
5.2-24	25
5.2-25	23
5.2-26	18
5.2-27	24
5.2-28	24
5.2-29	18
5.2-30	18
5.2-31	28
5.2-32	19
5.2-33	22
5.2-34	18
5.2-35	18
5.2-36	18
5.2-37	26
5.2-38	19
5.2-39	24
5.2-40	28
5.2-41	28
5.2-42	18
5.2-43	18
5.2-44	18
5.2-45	18
5.2-46	18
5.2-47	18
5.2-48	20
5.2-49	18
5.2-50	18
5.2-51	18
5.2-52	18
5.2-53	18
5.2-54	25
5.2-55	25
5.2-56	28
5.2-57	18
5.2-58	18
5.2-59	22
5.2-60	22
5.2-61	25
Table 5.2-1	13
Table 5.2.1-1 (Sheet 1)	26
Table 5.2.1-1 (Sheet 2)	26
Table 5.2.1-22	13
Table 5.2.1-23	13
Table 5.2.1-24	13

EFFECTIVE PAGE LISTING

Page	Effective Amendment
Table 5.2-2	13
Table 5.2.2-1	13
Table 5.2.2-2	13
Table 5.2-3 (Sheet 1)	13
Table 5.2-3 (Sheet 2)	13
Table 5.2.3-1 (Sheet 1)	24
Table 5.2.3-1 (Sheet 2)	24
Table 5.2.3-1 (Sheet 3)	24
Table 5.2.3-2 (Sheet 1)	30
Table 5.2.3-2 (Sheet 2)	13
Table 5.2.3-3	25
Table 5.2-4	25
Table 5.2.4-1	25
Table 5.2.4-2	25
Table 5.2.4-3	25
Table 5.2.4-4	13
Table 5.2.4-5	13
Table 5.2.4-6	13
Table 5.2.4-7	13
Table 5.2.4-8 (Sheet 1)	28
Table 5.2.4-8 (Sheet 2)	28
Table 5.2-5	18
Table 5.2.5-1	13
Figure 5.2.1-4	24
Figure 5.2.1-5	Original
Figure 5.2.1-6	24
Figure 5.2.1-8	Original
Figure 5.2.1-9	Original
Figure 5.2.1-10	Original
Figure 5.2.1-11	Original
Figure 5.2.1-12	Original
Figure 5.2.1-13	Original
Figure 5.2.1-14	18
Figure 5.2.1-15	Original
Figure 5.2.1-16	Original
Figure 5.2.6-1	Original
Figure 5.2.7-1	13
5.3-1	24
Figure 5.3.4-1	13
5.4-1	13
5.4-2	13
5.4-3	17
5.4-4	17
5.4-5	24
5.4-6	17
5.4-7	29
5.4-8	29
5.4-9	25
5.4-10	25
5.4-11	25
5.4-12	25

EFFECTIVE PAGE LISTING

Page	Effective Amendment
5.4-13	25
5.4-14	25
5.4-15	25
5.4-16	28
Table 5.4.2-1	13
Table 5.4.4-1	13
Figure 5.4.2-1	Original
Figure 5.4.3-1	Original
Figure 5.4.3-2	Original
Figure 5.4.3-3	29
5.5-1	18
5.5-2	18
5.5-3	25
5.5-4	18
5.5-5	24
5.5-6	18
5.5-7	25
5.5-8	18
5.5-9	24
5.5-10	24
5.5-11	24
5.5-12	25
5.5-13	25
5.5-14	25
5.5-15	25
5.5-16	18
5.5-17	18
5.5-18	18
5.5-19	18
5.5-20	18
5.5-21	18
5.5-22	27
5.5-23	18
5.5-24	18
5.5-25	25
5.5-25a	19
5.5-26	18
5.5-27	18
5.5-28	18
5.5-29	18
5.5-30	18
5.5-31	18
5.5-32	18
5.5-33	27
5.5-34	30
5.5-35	18
5.5-36	24
5.5-37	24
5.5-38	18
5.5-39	18
Table 5.5.1-1	16

EFFECTIVE PAGE LISTING

Page	Effective Amendment
Table 5.5.1-2	13
Table 5.5.2-1	24
Table 5.5.2-2	13
Table 5.5.3-1	13
Table 5.5.7-1	17
Table 5.5.7-2	16
Table 5.5.10-1	21
Table 5.5.10-2	13
Table 5.5.11-1	13
Table 5.5.12-1	18
Table 5.5.13-1	13
Figure 5.5.1-1	Original
Figure 5.5.1-2	Original
Figure 5.5.1-3	Original
Figure 5.5.2-1a	24
Figure 5.5.2-1b	24
Figure 5.5.7-1	13
Figure 5.5.7-2	22
Figure 5.5.10-1	Original
Figure 5.5.14-1	Original
Figure 5.5.14-2	24
Figure 5.5.14-3	Original
Figure 5.5.14-4	Original
Figure 5.5.14-5	24
5.6-1	28
5.6-2	13
5.6-3	28
5.6-4	28
5.6-5	28
5.6-6	28
CHAPTER 6	
6-1	29
6-2	20
6-3	13
6-4	15
6-5	13
6-6	18
6-7	21
6-8	20
6-9	13
6-10	13
6-11	13
6-12	14
6-13	14
6-14	14
6-15	20
6-16	13
6-17	13
6.1-1	30
6.1-2	29
6.2-1	17

EFFECTIVE PAGE LISTING

Page	Effective Amendment
6.2-2	13
6.2-3	13
6.2-4	13
6.2-5	30
6.2-6	14
6.2-7	27
6.2-8	13
6.2-9	13
6.2-10	13
6.2-11	13
6.2-12	13
6.2-13	25
6.2-14	13
6.2-15	13
6.2-16	13
6.2-17	25
6.2-18	18
6.2-19	18
6.2-20	18
6.2-21	24
6.2-22	24
6.2-22a	24
6.2-23	13
6.2-24	13
6.2-25	13
6.2-26	13
6.2-27	13
6.2-28	14
6.2-29	14
6.2-30	14
6.2-31	17
6.2-32	14
6.2-33	25
6.2-34	14
6.2-35	25
6.2-36	24
6.2-37	14
6.2-38	24
6.2-39	24
6.2-40	18
6.2-41	25
6.2-42	18
6.2-43	18
6.2-44	24
6.2-45	18
6.2-46	24
6.2-47	24
6.2-48	13
6.2-49	22
6.2-50	22
6.2-51	15

EFFECTIVE PAGE LISTING

Page	Effective Amendment
6.2-52	30
6.2-53	20
6.2-53a	21
6.2-54	13
6.2-55	13
6.2-56	30
6.2-57	21
6.2-58	23
6.2-59	21
6.2-60	13
6.2-61	16
6.2-62	13
6.2-63	13
6.2-64	19
6.2-65	30
6.2-66	13
6.2-67	13
6.2-68	13
6.2-69	13
6.2-70	26
6.2-71	13
6.2-72	13
6.2-73	13
6.2-74	13
6.2-75	13
6.2-76	23
6.2-77	13
6.2-78	18
6.2-79	13
6.2-80	13
6.2-81	13
6.2-82	24
6.2-83	13
6.2-84	28
6.2-85	28
6.2-86	28
6.2-87	30
6.2-88	16
6.2-89	20
6.2-90	29
6.2-91	29
6.2-92	20
6.2-93	21
6.2-94	20
6.2-95	26
6.2-96	26
6.2-97	20
6.2-98	20
6.2-99	20
6.2-100	20
6.2-101	20

EFFECTIVE PAGE LISTING

Page	Effective Amendment
6.2-102	30
Table 6.2.1-1 (Sheet 1)	18
Table 6.2.1-1 (Sheet 2)	13
Table 6.2.1-1 (Sheet 3)	13
Table 6.2.1-1 (Sheet 4)	13
Table 6.2.1-1 (Sheet 5)	16
Table 6.2.1-1 (Sheet 6)	14
Table 6.2.1-1 (Sheet 7)	26
Table 6.2.1-1 (Sheet 8)	15
Table 6.2.1-2	13
Table 6.2.1-3	13
Table 6.2.1-4	13
Table 6.2.1-5 (Sheet 1)	13
Table 6.2.1-5 (Sheet 2)	13
Table 6.2.1-6	14
Table 6.2.1-7	14
Table 6.2.1-8	18
Table 6.2.1-9	18
Table 6.2.1-10	18
Table 6.2.1-12	13
Table 6.2.1-13	14
Table 6.2.1-15	14
Table 6.2.1-16	14
Table 6.2.1-18	14
Table 6.2.1-21	18
Table 6.2.1-22	14
Table 6.2.1-23	14
Table 6.2.1-24	24
Table 6.2.1-25	13
Table 6.2.1-26 (Sheet 1)	13
Table 6.2.1-26 (Sheet 2)	13
Table 6.2.1-27	24
Table 6.2.1-28 (Sheet 1)	13
Table 6.2.1-28 (Sheet 2)	13
Table 6.2.1-28 (Sheet 3)	13
Table 6.2.1-29 (Sheet 1)	13
Table 6.2.1-29 (Sheet 2)	13
Table 6.2.1-29 (Sheet 3)	13
Table 6.2.1-29 (Sheet 4)	13
Table 6.2.1-29 (Sheet 5)	13
Table 6.2-1-30 (Sheet 1)	13
Table 6.2.1-30 (Sheet 2)	13
Table 6.2.1-31 (Sheet 1)	17
Table 6.2.1-31 (Sheet 2)	17
Table 6.2.1-32 (Sheet 1)	18
Table 6.2.1-32 (Sheet 2)	18
Table 6.2.1-32 (Sheet 3)	21
Table 6.2.1-33	24
Table 6.2.1-34	13
Table 6.2.1-35	13
Table 6.2.1-36	17

EFFECTIVE PAGE LISTING

Page	Effective Amendment
Table 6.2.1-37	13
Table 6.2.1-38	13
Table 6.2.1-39 (Sheet 1)	13
Table 6.2.1-39 (Sheet 2)	13
Table 6.2.1-40	25
Table 6.2.1-41 (Sheet 1)	13
Table 6.2.1-41 (Sheet 2)	13
Table 6.2.1-42 (Sheet 1)	13
Table 6.2.1-42 (Sheet 2)	13
Table 6.2.1-43	13
Table 6.2.1-44	13
Table 6.2.2-1	15
Table 6.2.2-2	21
Table 6.2.2-3	13
Table 6.2.3-1 (Sheet 1)	29
Table 6.2.3-1 (Sheet 2)	29
Table 6.2.3-2 (Sheet 1)	29
Table 6.2.3-2 (Sheet 2)	29
Table 6.2.4-1 (Sheet 1)	29
Table 6.2.4-1 (Sheet 2)	26
Table 6.2.4-1 (Sheet 3)	23
Table 6.2.4-1 (Sheet 4)	23
Table 6.2.4-1 (Sheet 5)	24
Table 6.2.4-1 (Sheet 6)	24
Table 6.2.4-1 (Sheet 7)	26
Table 6.2.4-1 (Sheet 8)	24
Table 6.2.4-1 (Sheet 9)	24
Table 6.2.4-1 (Sheet 10)	24
Table 6.2.4-1 (Sheet 11)	24
Table 6.2.4-1 (Sheet 12)	24
Table 6.2.4-1 (Sheet 13)	30
Table 6.2.4-1 (Sheet 14)	24
Table 6.2.4-1 (Sheet 15)	24
Table 6.2.6-1	26
Figure 6.2.1-1	13
Figure 6.2.1-2	Original
Figure 6.2.1-3	13
Figure 6.2.1-4	13
Figure 6.2.1-5	13
Figure 6.2.1-6	13
Figure 6.2.1-7	13
Figure 6.2.1-8	Original
Figure 6.2.1-9	Original
Figure 6.2.1-10	Original
Figure 6.2.1-11	Original
Figure 6.2.1-12	Original
Figure 6.2.1-13	Original
Figure 6.2.1-14	Original
Figure 6.2.1-15	18
Figure 6.2.1-16	18
Figure 6.2.1-17	18

EFFECTIVE PAGE LISTING

Page	Effective Amendment
Figure 6.2.1-18	18
Figure 6.2.1-19	18
Figure 6.2.1-22	13
Figure 6.2.1-23	13
Figure 6.2.1-24	Original
Figure 6.2.1-25	Original
Figure 6.2.1-26	Original
Figure 6.2.1-27	Original
Figure 6.2.1-28	Original
Figure 6.2.1-29	Original
Figure 6.2.1-30	Original
Figure 6.2.1-31	Original
Figure 6.2.1-32	Original
Figure 6.2.1-33	Original
Figure 6.2.1-34	Original
Figure 6.2.1-41	Original
Figure 6.2.1-42	Original
Figure 6.2.1-43	18
Figure 6.2.1-44	18
Figure 6.2.1-45	18
Figure 6.2.1-46	18
Figure 6.2.1-47	18
Figure 6.2.1-48	18
Figure 6.2.1-49	18
Figure 6.2.1-50	18
Figure 6.2.1-51	18
Figure 6.2.1-52	18
Figure 6.2.1-53	18
Figure 6.2.1-54	18
Figure 6.2.1-55	18
Figure 6.2.1-56	18
Figure 6.2.1-57	18
Figure 6.2.1-58	18
Figure 6.2.1-59	18
Figure 6.2.1-60	18
Figure 6.2.1-61	Original
Figure 6.2.1-62	Original
Figure 6.2.1-63	Original
Figure 6.2.1-63A	13
Figure 6.2.1-63B	13
Figure 6.2.1-63C	13
Figure 6.2.1-63D	13
Figure 6.2.1-63E	13
Figure 6.2.1-63F	13
Figure 6.2.1-64	8
Figure 6.2.1-65	8
Figure 6.2.1-66	8
Figure 6.2.1-67	8
Figure 6.2.1-68	8
Figure 6.2.1-69	8
Figure 6.2.1-70	Original

EFFECTIVE PAGE LISTING

Page	Effective Amendment
Figure 6.2.1-71	Original
Figure 6.2.1-72	Original
Figure 6.2.1-73	Original
Figure 6.2.1-74	Original
Figure 6.2.1-75	Original
Figure 6.2.1-76	Original
Figure 6.2.1-77	Original
Figure 6.2.1-78	Original
Figure 6.2.1-79	Original
Figure 6.2.1-80	Original
Figure 6.2.1-81	Original
Figure 6.2.1-82	Original
Figure 6.2.1-83	14
Figure 6.2.2-1	15
Figure 6.2.2-2	22
Figure 6.2.2-3	15
Figure 6.2.3-1	13
Figure 6.2.4-1	18
Figure 6.2.5A-l	1
Figure 6.2.5A-2	1
Figure 6.2.5A-3	1
Figure 6.2.5A-4	1
Figure 6.2.5A-5	1
Figure 6.2.5B-1	20
Figure 6.2.6-1	26
Figure 6.2.6-2	26
Figure 6.2.6-3	26
6.3-1	13
6.3-2	13
6.3-3	13
6.3-4	27
6.3-5	27
6.3-6	29
6.3-7	26
6.3-8	26
6.3-9	17
6.3-10	21
6.3-11	13
6.3-12	13
6.3-13	23
6.3-14	13
6.3-15	13
6.3-16	29
6.3-17	13
6.3-18	23
6.3-19	23
6.3-20	23
6.3-21	23
6.3-22	24
6.3-23	24
6.3-24	24

EFFECTIVE PAGE LISTING

Page	Effective Amendment
6.3-25	23
6.3-26	27
Table 6.3.2-1 (Sheet 1)	17
Table 6.3.2-1 (Sheet 2)	26
Table 6.3.2-1 (Sheet 3)	29
Table 6.3.2-2	16
Table 6.3.2-3	26
Table 6.3.2-4 (Sheet 1)	21
Table 6.3.2-4 (Sheet 2)	21
Table 6.3.2-4 (Sheet 3)	13
Table 6.3.2-5	27
Table 6.3.2-6	13
Table 6.3.2-7 (Sheet 1)	26
Table 6.3.2-7 (Sheet 2)	13
Table 6.3.2-7 (Sheet 3)	13
Table 6.3.2-8	13
Table 6.3.3-1	13
Figure 6.3.2-1	29
Figure 6.3.2-2	22
Figure 6.3.2-3	13
Figure 6.3.2-4	21
Figure 6.3.2-5	21
Figure 6.3.2-6	21
Figure 6.3.2-7	21
6.4-1	13
6.4-2	19
6.4-3	13
6.4-4	13
6.4-5	16
6.4-6	16
6.5-1	15
6.5-2	13
6.5-3	15
6.5-4	18
6.5-5	24
6.5-6	15
6.5-7	13
6.5-8	26
6.5-9	13
6.5-10	13
6.5-11	13
6.5-12	13
6.5-13	13
6.5-14	13
6.5-15	26
6.5-16	13
6.5-17	15
6.5-18	13
6.5-19	13
6.5-20	15
6.5-21	26

EFFECTIVE PAGE LISTING

Page	Effective Amendment
6.5-22	13
6.5-23	14
6.5-24	30
6.5-25	15
6.5-26	30
6.5-27	13
6.5-28	25
6.5-29	30
6.5-30	13
6.5-31	30
6.5-32	13
6.5-33	13
6.5-34	30
6.5-35	13
6.5-36	13
6.5-37	22
6.5-38	22
6.5-39	13
6.5-40	13
6.5-41	26
6.5-42	13
6.5-43	13
6.5-44	13
6.5-45	13
6.5-46	13
6.5-47	13
6.5-48	13
6.5-49	13
6.5-50	13
6.5-51	13
6.5-52	13
6.5-53	13
6.5-54	13
6.5-55	13
6.5-56	17
6.5-57	13
6.5-58	13
6.5-59	13
6.5-60	13
6.5-61	26
6.5-62	13
6.5-63	21
6.5-64	26
6.5-65	13
6.5-66	21
6.5-67	21
6.5-68	25
6.5-69	21
6.5-70	13
6.5-71	15
6.5-72	13

EFFECTIVE PAGE LISTING

Page	Effective Amendment
6.5-73	17
Table 6.5.2-1 (Sheet 1)	13
Table 6.5.2-1 (Sheet 2)	13
Table 6.5.2-2	13
Table 6.5.2-3	13
Table 6.5.3-1	13
Table 6.5.3-2	13
Table 6.5.3-3	13
Table 6.5.3-4	13
Table 6.5.3-5	13
Table 6.5.3-6	13
Table 6.5.3-7	13
Table 6.5.4-1	13
Table 6.5.4-2	13
Table 6.5.4-3	25
Table 6.5.4-4	15
Table 6.5.4-5	13
Table 6.5.4-6	13
Table 6.5.4-7	13
Table 6.5.4-8	13
Table 6.5.4-9	13
Table 6.5.4-10	13
Table 6.5.4-11	13
Table 6.5.4-12	13
Table 6.5.4-13	15
Table 6.5.4-14	15
Table 6.5.4-15	15
Table 6.5.4-16	15
Table 6.5.5-1	13
Table 6.5.6-1 (Sheet 1)	30
Table 6.5.6-1 (Sheet 2)	17
Table 6.5.9-1	13
Table 6.5.10-1 (Sheet 1)	13
Table 6.5.10-1 (Sheet 2)	13
Table 6.5.10-2 (Sheet 1)	13
Table 6.5.10-2 (Sheet 2)	13
Table 6.5.10-2 (Sheet 3)	13
Table 6.5.10-2 (Sheet 4)	13
Table 6.5.10-2 (Sheet 5)	13
Table 6.5.10-2 (Sheet 6)	13
Table 6.5.10-2 (Sheet 7)	13
Table 6.5.10-2 (Sheet 8)	13
Table 6.5.10-2 (Sheet 9)	13
Table 6.5.10-2 (Sheet 10)	13
Table 6.5.10-2 (Sheet 11)	13
Table 6.5.10-2 (Sheet 12)	13
Table 6.5.10-2 (Sheet 13)	13
Table 6.5.10-2 (Sheet 14)	13
Table 6.5.11-1	13
Table 6.5.11-2	13
Table 6.5.12-1	13

EFFECTIVE PAGE LISTING

Page	Effective Amendment
Table 6.5.15-1	Original
Figure 6.5.1-1	Original
Figure 6.5.1-2A	13
Figure 6.5.1-2B	13
Figure 6.5.1-3	Original
Figure 6.5.2-1	Original
Figure 6.5.2-2	Original
Figure 6.5.2-3	Original
Figure 6.5.3-1	6
Figure 6.5.3-2	Original
Figure 6.5.3-3	Original
Figure 6.5.3-4	Original
Figure 6.5.3-5	Original
Figure 6.5.4-1	Original
Figure 6.5.4-2	Original
Figure 6.5.6-1	13
Figure 6.5.7-1	Original
Figure 6.5.9-1	Original
Figure 6.5.9-2	13
Figure 6.5.9-3	Original
Figure 6.5.9-4	Original
Figure 6.5.9-5	Original
Figure 6.5.9-6	Original
Figure 6.5.9-7	6
Figure 6.5.10-1	Original
Figure 6.5.10-2	Original
Figure 6.5.10-3	Original
Figure 6.5.10-4	Original
Figure 6.5.10-5	Original
Figure 6.5.10-6	Original
Figure 6.5.10-7	Original
Figure 6.5.10-8	Original
Figure 6.5.10-9	Original
Figure 6.5.10-10	Original
Figure 6.5.10-11	Original
Figure 6.5.10-12	Original
Figure 6.5.10-13	Original
Figure 6.5.10-14	Original
Figure 6.5.10-15	Original
Figure 6.5.10-16	Original
Figure 6.5.11-1	6
Figure 6.5.12-1	Original
Figure 6.5.12-2	6
Figure 6.5.13-1	Original
Figure 6.5.15-1	15
Figure 6.5.15-2	Original
Figure 6.5.15-3	Original
Figure 6.5.15-4	Original
6.6-1	13
6.6-2	13
6.6-3	13

EFFECTIVE PAGE LISTING

Page	Effective Amendment
6.7-1	13
6.8-1	20
6.9-1	23
6.9-2	16
6A-1	13
6A-2	13
6A-3	13
6A-4	21
Figure 6A-1	13
CHAPTER 7	
7-1	30
7-2	28
7-3	28
7-4	28
7-5	13
7-6	13
7.1-1	28
7.1-2	13
7.1-3	13
7.1-4	13
7.1-5	28
7.1-6	13
7.1-7	30
7.1-8	30
7.1-9	26
7.1-10	26
7.1.10a	13
7.1-11	13
7.1-12	30
7.1-13	13
7.1-14	30
7.1-15	30
7.1-16	30
7.1-17	28
7.1-18	28
7.1-19	28
7.1-20	28
7.1-21	30
7.1-22	30
Figure 7.1.3-1	Original
Figure 7.1.3-2	Original
Figure 7.1.3-3	Original
Figure 7.1.3-4	Original
Figure 7.1.3-5	Original
Figure 7.1.4-1	28
7.2-1	13
7.2-2	13
7.2-3	13
7.2-4	13
7.2-5	13
7.2-6	13

EFFECTIVE PAGE LISTING

Page	Effective Amendment
7.2-7	13
7.2-8	13
7.2-9	30
7.2-10	13
7.2-11	13
7.2-12	13
7.2-13	16
7.2-14	30
7.2-15	26
7.2-16	24
7.2-17	13
7.2-18	13
7.2-19	28
7.2-20	28
7.2-21	28
7.2-22	28
7.2-23	28
7.2-24	29
7.2-25	28
7.2-26	28
7.2-27	28
7.2-28	28
7.2-29	28
7.2-30	28
7.2-31	28
7.2-32	28
7.2-33	28
Table 7.2.1-1 (Sheet 1)	13
Table 7.2.1-1 (Sheet 2)	30
Table 7.2.1-2	13
Table 7.2.1-3 (Sheet 1)	13
Table 7.2.1-3 (Sheet 2)	13
Table 7.2.1-3 (Sheet 3)	13
Table 7.2.1-4	13
Table 7.2.1-5 (Sheet 1)	13
Table 7.2.1-5 (Sheet 2)	13
Figure 7.2.1-1 (Sheet 1)	13
Figure 7.2.1-1 (Sheet 2)	13
Figure 7.2.1-1 (Sheet 3)	20
Figure 7.2.1-1 (Sheet 4)	13
Figure 7.2.1-1 (Sheet 5)	13
Figure 7.2.1-1 (Sheet 6)	13
Figure 7.2.1-1 (Sheet 7)	13
Figure 7.2.1-1 (Sheet 8)	13
Figure 7.2.1-1 (Sheet 9)	29
Figure 7.2.1-1 (Sheet 10)	28
Figure 7.2.1-1 (Sheet 11)	28
Figure 7.2.1-1 (Sheet 12)	28
Figure 7.2.1-1 (Sheet 13)	23
Figure 7.2.1-1 (Sheet 13A)	22
Figure 7.2.1-1 (Sheet 14)	23

EFFECTIVE PAGE LISTING

Page	Effective Amendment
Figure 7.2.1-1 (Sheet 14A)	22
Figure 7.2.1-1 (Sheet 15)	13
Figure 7.2.1-1 (Sheet 16)	23
Figure 7.2.1-1 (Sheet 17)	13
Figure 7.2.1-1 (Sheet 18)	13
Figure 7.2.1-1 (Sheet 19)	13
Figure 7.2.1-1 (Sheet 20)	13
Figure 7.2.1-2	Original
Figure 7.2.2-1	17
Figure 7.2.2-2	Original
7.3-1	13
7.3-2	13
7.3-3	13
7.3-4	13
7.3-5	13
7.3-6	13
7.3-7	13
7.3-8	13
7.3-9	13
7.3-10	13
7.3-11	13
7.3-12	13
7.3-13	13
7.3-14	13
7.3-15	28
7.3-16	13
Table 7.3.1-1	13
Table 7.3.1-2	13
Table 7.3.1-3	16
Table 7.3.1-4 (Sheet 1)	24
Table 7.3.1-4 (Sheet 2)	24
Table 7.3.1-4 (Sheet 3)	15
Table 7.3.1-4 (Sheet 4)	26
Table 7.3.1-4 (Sheet 5)	26
Table 7.3.2-1	13
7.4-1	13
7.4-2	20
7.4-3	13
7.4-4	13
7.4-5	13
7.5-1	13
7.5-2	13
7.5-3	13
7.5-4	15
7.5-5	15
7.5-6	15
7.5-7	30
7.5-8	13
Table 7.5-1	15
Table 7.5-2 (Sheet 1)	13
Table 7.5-2 (Sheet 2)	18

EFFECTIVE PAGE LISTING

Page	Effective Amendment
Table 7.5-2 (Sheet 3)	21
Table 7.5-2 (Sheet 4)	13
Table 7.5-2 (Sheet 5)	21
Table 7.5-2 (Sheet 6)	13
Table 7.5-2 (Sheet 7)	15
Table 7.5-2 (Sheet 8)	13
Table 7.5-2 (Sheet 9)	13
Table 7.5-2 (Sheet 10)	13
Table 7.5-2 (Sheet 11)	13
7.6-1	17
7.6-2	13
7.6-3	13
7.6-4	13
7.6-5	26
7.6-6	28
7.6-7	28
7.6-8	13
7.6-9	26
Figure 7.6.6-1	24
Figure 7.6.7-1	28
Figure 7.6.9-1 (Sheet 1)	6
Figure 7.6.9-1 (Sheet 2)	Original
Figure 7.6.9-1 (Sheet 3)	6
7.7-1	28
7.7-2	26
7.7-3	28
7.7-4	28
7.7-5	13
7.7-6	28
7.7-7	28
7.7-8	28
7.7-9	28
7.7-10	28
7.7-11	28
7.7-12	28
7.7-13	28
7.7-14	28
7.7-15	28
7.7-16	28
7.7-17	28
7.7-18	30
7.7-19	28
7.7-20	28
7.7-21	28
7.7-22	28
Table 7.7.1-1	30
Figure 7.7.1-1	28
Figure 7.7.1-2	28
Figure 7.7.1-3	Original
Figure 7.7.1-4	28
Figure 7.7.1-5	13

EFFECTIVE PAGE LISTING

Page	Effective Amendment
7A-1	13
7A-2	28
7A-3	13
7A-4	13
7A-5	13
Figure 7A-1	Original
Figure 7A-2	13
Figure 7A-3	13
Figure 7A-4	13
Figure 7A-5	13
Figure 7A-6	13
CHAPTER 8	
8-1	24
8-2	20
8-3	20
8-4	13
8-5	13
8.1-1	25
8.1-2	13
8.1-3	26
8.1-4	30
8.1-5	13
8.1-6	30
Table 8.1.2-1 (Sheet 1)	13
Table 8.1.2-1 (Sheet 2)	13
Figure 8.1.1-1	17
Figure 8.1.2-1	26
Figure 8.1.2-2	26
8.2-1	28
8.2-2	26
8.2-3	25
8.2-4	25
8.2-5	25
8.2-6	25
8.2-7	25
8.2-8	25
8.2-9	25
8.2-10	25
8.2-11	25
8.2-12	24
8.2-13	24
8.2-14	27
8.2-15	29
8.2-16	28
Table 8.2.1-1 (Sheet 1)	25
Table 8.2.1-1 (Sheet 2)	29
Table 8.2.1-1 (Sheet 3)	13
Table 8.2.1-1 (Sheet 4)	13
Table 8.2.1-1 (Sheet 5)	13
Figure 8.2.1-1	30
Figure 8.2.1-2	26

EFFECTIVE PAGE LISTING

Page	Effective Amendment
Figure 8.2.1-3	26
Figure 8.2.1-4	26
Figure 8.2.1-5	26
Figure 8.2.1-6	13
8.3-1	13
8.3-2	13
8.3-3	21
8.3-4	29
8.3-5	29
8.3-6	29
8.3-7	29
8.3-8	29
8.3-9	29
8.3-10	29
8.3-11	30
8.3-12	29
8.3-13	29
8.3-14	29
8.3-15	29
8.3-16	29
8.3-17	30
8.3-18	29
8.3-19	29
8.3-20	29
8.3-21	29
8.3-22	29
8.3-23	29
8.3-24	29
8.3-25	29
8.3-26	29
8.3-27	29
8.3-28	30
8.3-29	29
8.3-30	29
8.3-31	29
8.3-32	29
8.3-33	29
8.3-34	29
8.3-35	29
8.3-36	29
8.3-37	29
8.3-38	29
8.3-39	29
8.3-40	29
8.3-41	29
8.3-42	29
8.3-43	29
8.3-44	29
8.3-45	29
8.3-46	29
8.3-47	29

EFFECTIVE PAGE LISTING

Page	Effective Amendment
8.3-48	29
8.3-49	29
8.3-50	29
Table 8.3.1-1	21
Table 8.3.1-2	16
Table 8.3.1-3	13
Table 8.3.1-4	25
Table 8.3.1-5	13
Table 8.3.1-6	13
Table 8.3.1-7	13
Table 8.3.1-8	13
Table 8.3.1-9	13
Table 8.3.1-11	13
Table 8.3.2-1	13
Figure 8.3.1-1	29
Figure 8.3.1-2	28
Figure 8.3.1-3	28
Figure 8.3.1-4	13
Figure 8.3.1-5	24
Figure 8.3.1-6	29
Figure 8.3.1-7	17
Figure 8.3.1-8	19
Figure 8.3.1-9	30
Figure 8.3.1-10	17
Figure 8.3.1-11	30
Figure 8.3.1-12	30
Figure 8.3.1-13	30
Figure 8.3.1-14	26
Figure 8.3.1-15	19
Figure 8.3.1-16	30
Figure 8.3.1-17	23
Figure 8.3.1-18	13
Figure 8.3.1-19	13
Figure 8.3.1-20	13
Figure 8.3.1-21	18
Figure 8.3.1-22	13
Figure 8.3.2-1	27
CHAPTER 9	
9-1	19
9-2	19
9-3	19
9-4	19
9-5	19
9-6	24
9-7	25
9-8	16
9-9	16
9-10	21
9.1-1	28
9.1-2	24

EFFECTIVE PAGE LISTING

Page	Effective Amendment
9.1-3	18
9.1-4	18
9.1-5	18
9.1-6	18
9.1-7	18
9.1-8	20
9.1-9	18
9.1-10	18
9.1-11	18
9.1-12	18
9.1-13	18
9.1-14	19
9.1-15	19
9.1-16	19
9.1-17	19
9.1-18	18
9.1-19	18
9.1-20	18
9.1-21	30
9.1-22	19
9.1-23	27
9.1-24	27
9.1-25	28
9.1-26	27
Table 9.1.3-1 (Sheet 1)	13
Table 9.1.3-1 (Sheet 2)	13
Table 9.1.3-2 (Sheet 1)	20
Table 9.1.3-2 (Sheet 2)	13
Table 9.1.3-4	18
Table 9.1.5-1	19
Table 9.1.5-2	27
Figure 9.1.1-1	13
Figure 9.1.1-2	21
Figure 9.1.2-1	Original
Figure 9.1.2-2	13
Figure 9.1.3-1	13
Figure 9.1.3-2	13
Figure 9.1.4-1	15
Figure 9.1.4-3	Original
Figure 9.1.4-4	Original
Figure 9.1.4-5	13
Figure 9.1.4-6	13
Figure 9.1.4-7	18
Figure 9.1.4-8	Original
9.2-1	21
9.2-2	25
9.2-3	25
9.2-4	19
9.2-5	13
9.2-6	13

EFFECTIVE PAGE LISTING

Page	Effective Amendment
9.2-7	25
9.2-8	25
9.2-9	27
9.2-10	27
9.2-11	27
9.2-12	27
9.2-13	27
9.2-14	29
9.2-15	27
9.2-16	27
9.2-17	27
9.2-18	27
9.2-19	27
9.2-20	27
9.2-21	27
9.2-22	27
9.2-23	27
9.2-24	27
9.2-25	27
9.2-26	27
9.2-27	27
9.2-28	27
9.2-29	29
Table 9.2.1-1 (Sheet 1)	13
Table 9.2.1-1 (Sheet 2)	13
Table 9.2.1-2 (Sheet 1)	13
Table 9.2.1-2 (Sheet 2)	13
Table 9.2.2-1	13
Table 9.2.2-2	13
Table 9.2.7-1	13
Figure 9.2.1-1	17
Figure 9.2.1-2	25
Figure 9.2.1-3	25
Figure 9.2.1-4	22
Figure 9.2.1-5	13
Figure 9.2.1-6	13
Figure 9.2.1-7	13
Figure 9.2.2-1	24
Figure 9.2.2-2	24
Figure 9.2.2-3	18
Figure 9.2.2-3a	16
Figure 9.2.2-4	30
Figure 9.2.2-4a	30
Figure 9.2.2-5	24
Figure 9.2.2-6	13
Figure 9.2.3-1	13
Figure 9.2.3-2	16
Figure 9.2.7-1	21
Figure 9.2.7-2	25
Figure 9.2.7-3	27
Figure 9.2.7-4	27

EFFECTIVE PAGE LISTING

Page	Effective Amendment
9.3-1	16
9.3-2	19
9.3-2a	19
9.3-3	26
9.3-4	16
9.3-5	25
9.3-6	16
9.3-7	19
9.3-8	13
9.3-9	13
9.3-10	19
9.3-11	17
9.3-12	13
9.3-13	29
9.3-14	19
9.3-15	13
9.3-16	29
9.3-17	29
9.3-18	29
9.3-19	13
9.3-20	29
9.3-21	29
9.3-22	17
9.3-23	13
9.3-24	13
9.3-25	29
9.3-26	29
9.3-27	13
9.3-28	27
9.3-29	17
9.3-30	13
9.3-31	28
9.3-32	13
9.3-33	13
9.3-34	13
Table 9.3.1-1	27
Table 9.3.2-1 (Sheet 1)	17
Table 9.3.2-1 (Sheet 2)	16
Table 9.3.2-1 (Sheet 3)	16
Table 9.3.2-1 (Sheet 4)	13
Table 9.3.4-1	19
Table 9.3.4-2 (Sheet 1)	13
Table 9.3.4-2 (Sheet 2)	13
Table 9.3.4-2 (Sheet 3)	13
Table 9.3.4-2 (Sheet 4)	19
Table 9.3.4-2 (Sheet 5)	19
Table 9.3.4-2 (Sheet 6)	13
Figure 9.3.1-1	17
Figure 9.3.1-2	13
Figure 9.3.1-3	17
Figure 9.3.3-1	13

EFFECTIVE PAGE LISTING

Page	Effective Amendment
Figure 9.3.3-2	13
Figure 9.3.4-1	29
Figure 9.3.4-2	30
Figure 9.3.4-3	17
Figure 9.3.4-4	15
Figure 9.3.4-5	26
Figure 9.3.4-6	13
Figure 9.3.6-1	13
9.4-1	16
9.4-2	13
9.4-3	16
9.4-4	13
9.4-5	13
9.4-6	16
9.4-7	13
9.4-8	13
9.4-9	16
9.4-10	30
9.4-11	13
9.4-12	14
9.4-12a	14
9.4-13	27
9.4-14	27
9.4-15	13
9.4-16	13
9.4-17	13
9.4-18	19
9.4-19	26
9.4-20	21
9.4-21	15
9.4-22	13
9.4-23	19
9.4-24	22
9.4-25	18
9.4-26	21
9.4-27	18
9.4-28	28
9.4-29	18
9.4-30	25
Table 9.4.1-1 (Sheet 1)	16
Table 9.4.1-1 (Sheet 2)	16
Table 9.4.7-1	13
Figure 9.4.1-1	25
Figure 9.4.2-1	13
Figure 9.4.2-2	13
Figure 9.4.2-2a	13
Figure 9.4.2-3	17
Figure 9.4.2-4	16
Figure 9.4.2-5	16
Figure 9.4.5-1	30
Figure 9.4.7-1	18

EFFECTIVE PAGE LISTING

Page	Effective Amendment
Figure 9.4.10-1	13
9.5-1	26
9.5-2	13
9.5-3	26
9.5-4	26
9.5-5	26
9.5-6	26
9.5-7	13
9.5-8	26
9.5-9	13
9.5-10	13
9.5-11	24
9.5-12	13
9.5-13	13
9.5-14	17
9.5-15	24
Table 9.5.2-1	26
Table 9.5.10-1	15
Figure 9.5.4-1	26
Figure 9.5.5-1	13
Figure 9.5.6-1	29
CHAPTER 10	
10-1	13
10-2	13
10-3	13
10-4	13
10-5	17
10.1-1	17
Table 10.1-1 (Sheet 1)	28
Table 10.1-1 (Sheet 2)	13
Table 10.1-1 (Sheet 3)	25
Table 10.1-1 (Sheet 4)	13
Table 10.1-1 (Sheet 5)	26
Figure 10.1-1	13
Figure 10.1-2	18
Figure 10.1-3	24
10.2-1	24
10.2-2	30
10.2-3	13
10.2-4	19
10.2-5	19
10.2-6	18
10.2-7	13
10.2-8	13
10.2-9	25
10.2-10	13
10.2-11	13
10.2-12	13
10.2-13	13
10.2-14	13

EFFECTIVE PAGE LISTING

Page	Effective Amendment
10.2-15	13
10.2-16	18
Table 10.2.3-1	13
Table 10.2.3-2	13
Table 10.2.3-3 (Sheet 1)	13
Table 10.2.3-3 (Sheet 2)	13
Table 10.2.3-4	13
Table 10.2.3-5	13
Figure 10.2.3-1	Original
Figure 10.2.3-2	Original
Figure 10.2.3-3	Original
Figure 10.2.3-4	6
10.3-1	26
10.3-2	18
10.3-3	24
10.3-4	18
10.3-5	24
10.3-6	18
10.3-7	29
Table 10.3.2-1	14
Table 10.3.3-1	14
Figure 10.3.2-1	28
10.4-1	13
10.4-2	29
10.4-3	13
10.4-4	13
10.4-5	13
10.4-6	13
10.4-7	28
10.4-7a	28
10.4-8	13
10.4-9	21
10.4-10	27
10.4-11	13
10.4-12	13
10.4-13	16
10.4-14	15
10.4-15	17
10.4-16	13
10.4-17	23
10.4-18	22
10.4-19	22
10.4-20	22
10.4-21	13
10.4-22	19
10.4-23	14
10.4-24	13
10.4-25	13
10.4-26	26
10.4-27	24
10.4-28	14

EFFECTIVE PAGE LISTING

Page	Effective Amendment
10.4-29	25
10.4-30	25
10.4-31	25
10.4-32	26
10.4-33	13
10.4-34	17
10.4-35	25
10.4-36	25
10.4-37	26
10.4-38	25
10.4-39	24
10.4-40	13
10.4-41	20
10.4-42	20
10.4-43	13
10.4-44	13
10.4-45	25
10.4-46	25
10.4-47	28
10.4-48	19
10.4-49	19
Table 10.4.1-1	13
Table 10.4.7-1	26
Table 10.4.7-2	14
Table 10.4.7-3	13
Table 10.4.7-4 (Sheet 1)	13
Table 10.4.7-4 (Sheet 2)	25
Table 10.4.7-5	13
Table 10.4.7-6 (Sheet 1)	14
Table 10.4.7-6 (Sheet 2)	14
Table 10.4.7-6 (Sheet 3)	14
Table 10.4.7-6 (Sheet 4)	14
Table 10.4.8-1 (Sheet 1)	14
Table 10.4.8-1 (Sheet 2)	14
Figure 10.4.2-1	17
Figure 10.4.5-1	24
Figure 10.4.5-2	23
Figure 10.4.7-1	29
Figure 10.4.7-2	28
Figure 10.4.7-3	30
Figure 10.4.7-4	19
Figure 10.4.7-5	28
Figure 10.4.7-6	13
Figure 10.4.7-7	13
Figure 10.4.8-1	15
Figure 10.4.8-2	13
Figure 10.4.8-3	13
Figure 10.4.9-1	28
Figure 10.4.9-2	28
CHAPTER 11	
11-1	13

EFFECTIVE PAGE LISTING

Page	Effective Amendment
11-2	20
11-3	13
11-4	15
11-5	13
11.1-1	25
11.1-2	25
11.1-3	13
11.1-4	13
Table 11.1.1-1 (Sheet 1)	13
Table 11.1.1-1 (Sheet 2)	13
Table 11.1.1-2 (Sheet 1)	13
Table 11.1.1-2 (Sheet 2)	13
Table 11.1.1-3	13
Table 11.1.1-4	13
Table 11.1.1-5	13
Table 11.1.2-1	13
Table 11.1.2-2 (Sheet 1)	13
Table 11.1.2-2 (Sheet 2)	13
Table 11.1.2-2 (Sheet 3)	13
Table 11.1.2-3 (Sheet 1)	13
Table 11.1.2-3 (Sheet 2)	13
Table 11.1.2-4 (Sheet 1)	13
Table 11.1.2-4 (Sheet 2)	13
Table 11.1.2-4 (Sheet 3)	13
11.2-1	17
11.2-2	22
11.2-3	17
11.2-4	17
11.2-5	17
11.2-6	17
11.2-7	19
11.2-8	17
11.2-9	22
11.2-10	18
11.2-11	19
11.2-12	13
11.2-13	17
11.2-14	27
11.2-15	27
11.2-16	17
11.2-17	16
11.2-18	16
11.2-19	13
11.2-20	13
Table 11.2.2-1 (Sheet 1)	17
Table 11.2.2-1 (Sheet 2)	13
Table 11.2.2-2	13
Table 11.2.3-1 (Sheet 1)	13
Table 11.2.3-1 (Sheet 2)	13
Table 11.2.3-1 (Sheet 3)	17
Table 11.2.3-1 (Sheet 4)	28

EFFECTIVE PAGE LISTING

Page	Effective Amendment
Table 11.2.3-1 (Sheet 5)	13
Table 11.2.4-1	13
Table 11.2.9-1	13
Table 11.2.9-2	13
Figure 11.2.2-1	28
Figure 11.2.2-2	27
11.3-1	13
11.3-2	14
11.3-3	14
11.3-4	13
11.3-5	13
11.3-6	19
11.3-7	17
11.3-8	13
11.3-9	13
11.3-10	15
Table 11.3.2-1 (Sheet 1)	13
Table 11.3.2-1 (Sheet 2)	14
Table 11.3.2-1 (Sheet 3)	13
Table 11.3.2-1 (Sheet 4)	14
Table 11.3.2-2	15
Table 11.3.3-1	13
Table 11.3.6-1	15
Table 11.3.6-2 (Sheet 1)	15
Table 11.3.6-2 (Sheet 2)	15
Table 11.3.9-1	13
Table 11.3.9-2	13
Table 11.3.9-3	13
Table 11.3.9-4	15
Table 11.3.9-5	15
Figure 11.3.2-1	16
Figure 11.3.2-2	21
11.4-1	13
11.4-2	23
11.4-3	19
11.4-4	19
11.4-5	23
11.4-6	17
11.4-7	20
11.4-8	20
11.4-9	16
11.4-10	28
Table 11.4.2-1 (Sheet 1)	23
Table 11.4.2-1 (Sheet 2)	19
Table 11.4.2-2 (Sheet 1)	30
Table 11.4.2-2 (Sheet 2)	16
Table 11.4.2-2 (Sheet 3)	16
Table 11.4.2-3 (Sheet 1)	17
Table 11.4.2-3 (Sheet 2)	16
Table 11.4.2-3 (Sheet 3)	15
Table 11.4.2-3 (Sheet 4)	16

EFFECTIVE PAGE LISTING

Page	Effective Amendment
Table 11.4.2-3 (Sheet 5)	19
Table 11.4.2-3 (Sheet 6)	19
11.5-1	17
11.5-2	17
11.5-3	13
11.5-4	25
11.5-5	16
Table 11.5.2-1	13
11.6-1	13
11.6-2	13
11.6-3	13
11.6-4	13
11.6-5	17
Table 11.6.4-1	13
11A-1	13
11A-2	17
11A-3	17
11A-4	17
Table 11A-1	21
Table 11A-2	21
CHAPTER 12	
12-1	13
12-2	13
12-3	16
12.1-1	29
12.1-2	18
12.1-3	13
12.1-4	18
12.1-5	13
12.1-6	13
12.1-7	13
12.1-8	27
12.1-9	27
12.1-10	23
12.1-11	23
12.1-12	23
12.1-13	23
12.1-14	23
12.1-15	24
Table 12.1.2-1	26
Table 12.1.4-1	20
Table 12.1.6-1	13
12.2-1	13
12.2-2	13
12.2-3	13
12.2-4	16
12.2-5	26
12.2-6	13
Table 12.2.4-1	25
Table 12.2.4-2	25
Table 12.2.4-3	26

EFFECTIVE PAGE LISTING

Page	Effective Amendment
Table 12.2.6-1	13
12.3-1	26
12.3-2	24
12.4-1	13
Table 12.4.2-1	13
CHAPTER 13	
13-1	13
13-2	27
13.1-1	13
13.1-2	28
13.1-3	26
13.2-1	28
13.3-1	13
13.4-1	15
13.5-1	28
13.5-2	16
13.5-3	13
13.5-4	13
13.5-5	13
Figure 13.5.1-1	13
13.6-1	19
13.6-2	19
13.7-1	29
13.8-1	15
13.9-1	26
13.9-2	29
13.9-3	29
13.9-4	27
13.9-5	27
13.9-6	27
13.9-7	27
13.9-8	29
13.9-9	29
13.9-10	29
13.9-11	29
13.9-12	29
13.9-13	29
13.9-14	29
13.9-15	28
13.9-16	29
13.9-17	29
13.9-18	29
13.9-19	28
13.9-20	29
13.9-21	29
13.9-22	30
13.9-23	29
13.9-24	29
13.9-25	28
13.9-26	29
13.9-27	29

EFFECTIVE PAGE LISTING

Page	Effective Amendment
13.9-28	29
13.9-29	28
13.9-30	28
13.9-31	30
13.9-32	29
13.9-33	29
13.9-34	28
13.9-35	29
13.9-36	29
13.9-37	28
13.9-38	28
13.9-39	29
13.9-40	29
13.9-41	29
13.9-42	29
13.9-43	29
13.9-44	29
13.9-45	29
13.9-46	29
13.9-47	29
13.9-48	29
13.9-49	28
13.9-50	28
13.9-51	28
13.9-52	28
13.9-53	28
13.9-54	29
13.9-55	29
13.9-56	29
13.9-57	29
13.9-58	29
13.9-59	29
13.9-60	29
13.9-61	29
13.9-62	30
13.9-63	29
13.9-64	30
13.9-65	29
13.9-66	29
13.9-67	29
13.9-68	29
13.9-69	29
13.9-70	29
13.9-71	29
13.9-72	29
13.9-73	29
13.9-74	29
13.9-75	29
13.9-76	29
13.9-77	29
13.9-78	29

EFFECTIVE PAGE LISTING

Page	Effective Amendment
13.9-79	29
13.9-80	29
13.9-81	29
13.9-82	29
13.9-83	29
13.9-84	29
13.9-85	29
13.9-86	29
13.9-87	29
13.9-88	29
13.9-89	29
13.9-90	29
13.9-91	29
13.9-92	29
13.9-93	29
13.9-94	29
13.9-95	29
13.9-96	29
13.9-97	29
13.9-98	29
13.9-99	29
13.9-100	29
13.9-101	30
13.9-102	29
13.9-103	29
13.9-104	29
13.9-105	29
CHAPTER 14	
14-1	13
14.1-1	13
14.1-2	13
14.1-3	13
14.1-4	13
14.1-5	13
14.1-6	13
14.1-7	13
14.1-8	13
14.1-9	13
14.1-10	13
14.1-11	13
14.1-12	13
14.1-13	13
Table 14.1-1 (Sheet 1)	13
Table 14.1-1 (Sheet 2)	13
Table 14.1-1 (Sheet 3)	13
Table 14.1-1 (Sheet 4)	13
Table 14.1-1 (Sheet 5)	13
Table 14.1-1 (Sheet 6)	13
Table 14.1-1 (Sheet 7)	13
Table 14.1-1 (Sheet 8)	13
Table 14.1-1 (Sheet 9)	13

EFFECTIVE PAGE LISTING

Page	Effective Amendment
Table 14.1-1 (Sheet 10)	13
Table 14.1-1 (Sheet 11)	13
Table 14.1-1 (Sheet 12)	13
Table 14.1-1 (Sheet 13)	13
Table 14.1-1 (Sheet 14)	13
Table 14.1-1 (Sheet 15)	13
Table 14.1-1 (Sheet 16)	13
Table 14.1-1 (Sheet 17)	13
Table 14.1-1 (Sheet 18)	13
Table 14.1-1 (Sheet 19)	13
Table 14.1-1 (Sheet 20)	13
Table 14.1-1 (Sheet 21)	13
Table 14.1-1 (Sheet 22)	13
Table 14.1-1 (Sheet 23)	13
Table 14.1-1 (Sheet 24)	13
Table 14.1-1 (Sheet 25)	13
Table 14.1-1 (Sheet 26)	13
Table 14.1-1 (Sheet 27)	13
Table 14.1-1 (Sheet 28)	13
Table 14.1-1 (Sheet 29)	13
Table 14.1-1 (Sheet 30)	13
Table 14.1-1 (Sheet 31)	13
Table 14.1-1 (Sheet 32)	13
Table 14.1-1 (Sheet 33)	13
Table 14.1-1 (Sheet 34)	13
Table 14.1-1 (Sheet 35)	13
Table 14.1-1 (Sheet 36)	13
Table 14.1-1 (Sheet 37)	13
Table 14.1-1 (Sheet 38)	13
Table 14.1-1 (Sheet 39)	13
Table 14.1-1 (Sheet 40)	13
Table 14.1-1 (Sheet 41)	13
Table 14.1-1 (Sheet 42)	13
Table 14.1-1 (Sheet 43)	13
Table 14.1-1 (Sheet 44)	13
Table 14.1-1 (Sheet 45)	13
Table 14.1-1 (Sheet 46)	13
Table 14.1-1 (Sheet 47)	13
Table 14.1-1 (Sheet 48)	13
Table 14.1-1 (Sheet 49)	13
Table 14.1-1 (Sheet 50)	13
Table 14.1-1 (Sheet 51)	13
Table 14.1-1 (Sheet 52)	13
Table 14.1-1 (Sheet 53)	13
Table 14.1-1 (Sheet 54)	13
Table 14.1-1 (Sheet 55)	13
Table 14.1-1 (Sheet 56)	13
Table 14.1-1 (Sheet 57)	13
Table 14.1-1 (Sheet 58)	13
Table 14.1-1 (Sheet 59)	13
Table 14.1-1 (Sheet 60)	13

EFFECTIVE PAGE LISTING

Page	Effective Amendment
Table 14.1-1 (Sheet 61)	13
Table 14.1-1 (Sheet 62)	13
Table 14.1-1 (Sheet 63)	13
Table 14.1-1 (Sheet 64)	13
Table 14.1-1 (Sheet 65)	13
Table 14.1-1 (Sheet 66)	13
Table 14.1-1 (Sheet 67)	13
Table 14.1-1 (Sheet 68)	13
Table 14.1-1 (Sheet 69)	13
Table 14.1-1 (Sheet 70)	13
Table 14.1-1 (Sheet 71)	13
Table 14.1-1 (Sheet 72)	13
Table 14.1-1 (Sheet 73)	13
Table 14.1-1 (Sheet 74)	13
Table 14.1-1 (Sheet 75)	13
Table 14.1-1 (Sheet 76)	13
Table 14.1-1 (Sheet 77)	13
Table 14.1-1 (Sheet 78)	13
Table 14.1-1 (Sheet 79)	13
Table 14.1-1 (Sheet 80)	13
Table 14.1-1 (Sheet 81)	13
Table 14.1-1 (Sheet 82)	13
Table 14.1-1 (Sheet 83)	13
Table 14.1-1 (Sheet 84)	13
Table 14.1-1 (Sheet 85)	13
Table 14.1-1 (Sheet 86)	13
Table 14.1-1 (Sheet 87)	13
Table 14.1-1 (Sheet 88)	13
Table 14.1-1 (Sheet 89)	13
Table 14.1-1 (Sheet 90)	13
Table 14.1-1 (Sheet 91)	13
Table 14.1-1 (Sheet 92)	13
Table 14.1-2 (Sheet 1)	13
Table 14.1-2 (Sheet 2)	13
Table 14.1-2 (Sheet 3)	13
Table 14.1-2 (Sheet 4)	13
Table 14.1-2 (Sheet 5)	13
Table 14.1-2 (Sheet 6)	13
Table 14.1-2 (Sheet 7)	13
Table 14.1-2 (Sheet 8)	13
Table 14.1-2 (Sheet 9)	13
Table 14.1-2 (Sheet 10)	13
Table 14.1-2 (Sheet 11)	13
Table 14.1-2 (Sheet 12)	13
Table 14.1-2 (Sheet 13)	13
Table 14.1-2 (Sheet 14)	13
Table 14.1-2 (Sheet 15)	13
Table 14.1-3 (Sheet 1)	13
Table 14.1-3 (Sheet 2)	13
Table 14.1-3 (Sheet 3)	13
Table 14.1-3 (Sheet 4)	13

EFFECTIVE PAGE LISTING

Page	Effective Amendment
Table 14.1-3 (Sheet 5)	13
Table 14.1-3 (Sheet 6)	13
Table 14.1-3 (Sheet 7)	13
Table 14.1-3 (Sheet 8)	13
Table 14.1-3 (Sheet 9)	13
Table 14.1-3 (Sheet 10)	13
Table 14.1-3 (Sheet 11)	13
Table 14.1-3 (Sheet 12)	13
Table 14.1-3 (Sheet 13)	13
Table 14.1-3 (Sheet 14)	13
Figure 14.1-1	Original
Figure 14.1-2	Original
Figure 14.1-3	Original
Figure 14.1-4	Original
14.2-1	13
14.2-2	13
14.2-3	13
Figure 14.2.2-1	13
Figure 14.2.2-2	13
CHAPTER 15	
15-1	24
15-2	21
15-3	27
15-4	24
15-5	24
15-6	18
15-7	24
15-8	24
15-9	26
15-10	26
15-11	26
15-12	26
15-13	26
15-14	26
15-15	26
15-16	26
15-17	26
15-18	26
15-19	26
15-20	26
15-21	26
15.1-1	24
15.1-2	17
15.1-3	24
15.1-4	24
15.1-4a	24
15.1-5	17
15.1-5a	26
15.1-6	13
15.1-7	13
15.1-8	13

EFFECTIVE PAGE LISTING

Page	Effective Amendment
15.1-9	13
15.1-10	24
15.1-11	21
15.1-12	13
15.1-13	21
15.1-14	24
15.1-15	21
15.1-16	21
15.1-17	24
Table 15.1.2-1	17
Table 15.1.2-2 (Sheet 1)	24
Table 15.1.2-2 (Sheet 2)	26
Table 15.1.2-2 (Sheet 3)	21
Table 15.1.3-1 (Sheet 1)	17
Table 15.1.3-1 (Sheet 2)	17
Table 15.1.7-1	13
Table 15.1.7-2	13
Figure 15.1.3-1	24
Figure 15.1.3-2a	24
Figure 15.1.3-2b	26
Figure 15.1.3-2c	26
Figure 15.1.5-1	24
Figure 15.1.5-2	13
Figure 15.1.5-3	13
Figure 15.1.6-1	1
Figure 15.1.8-1	1
Figure 15.1.9-1	13
15.2-1	18
15.2-2	18
15.2-3	18
15.2-4	18
15.2-5	24
15.2-6	18
15.2-7	26
15.2-8	18
15.2-9	26
15.2-10	29
15.2-11	24
15.2-12	26
15.2-13	26
15.2-14	28
15.2-15	28
15.2-16	24
15.2-17	24
15.2-18	18
15.2-19	30
15.2-20	24
15.2-21	26
15.2-22	26
15.2-23	26
15.2-24	26

EFFECTIVE PAGE LISTING

Page	Effective Amendment
15.2-25	18
15.2-26	19
15.2-27	18
15.2-28	24
15.2-29	27
15.2-30	24
15.2-31	24
15.2-32	24
15.2-33	28
15.2-34	26
15.2-35	24
15.2-36	24
15.2-37	22
15.2-37a	22
15.2-38	24
15.2-39	25
15.2-40	21
15.2-41	24
15.2-42	24
Table 15.2-1 (Sheet 1)	26
Table 15.2-1 (Sheet 2)	13
Table 15.2-1 (Sheet 3)	24
Table 15.2-1 (Sheet 4)	26
Table 15.2-1 (Sheet 5)	15
Table 15.2-1 (Sheet 6)	27
Table 15.2-1 (Sheet 7)	26
Table 15.2-1 (Sheet 8)	24
Table 15.2.7-1	13
Table 15.2.7-2	25
Table 15.2.7-3	25
Figure 15.2.1-1	18
Figure 15.2.1-2a	24
Figure 15.2.1-2b	24
Figure 15.2.1-3a	26
Figure 15.2.1-3b	26
Figure 15.2.1-3c	26
Figure 15.2.2-1a	26
Figure 15.2.2-1b	26
Figure 15.2.2-2a	26
Figure 15.2.2-2b	26
Figure 15.2.2-3a	26
Figure 15.2.2-3b	26
Figure 15.2.2-4a	26
Figure 15.2.2-4b	26
Figure 15.2.2-5a	26
Figure 15.2.2-5b	26
Figure 15.2.2-6a	26
Figure 15.2.2-6b	26
Figure 15.2.2-7a	26
Figure 15.2.2-7b	26
Figure 15.2.3-1	Original

EFFECTIVE PAGE LISTING

Page	Effective Amendment
Figure 15.2.3-2	Original
Figure 15.2.4-1	Original
Figure 15.2.4-2	Original
Figure 15.2.4-3	Original
Figure 15.2.5-1	10
Figure 15.2.5-2aa	24
Figure 15.2.5-2ab	24
Figure 15.2.5-2ba	24
Figure 15.2.5-2bb	24
Figure 15.2.5-2c	10
Figure 15.2.5-3a	24
Figure 15.2.5-3b	26
Figure 15.2.5-3c	26
Figure 15.2.6-1	10
Figure 15.2.6-2	10
Figure 15.2.6-3	10
Figure 15.2.6-4	10
Figure 15.2.7-1a	26
Figure 15.2.7-1b	26
Figure 15.2.7-2a	26
Figure 15.2.7-2b	26
Figure 15.2.7-3a	26
Figure 15.2.7-3b	26
Figure 15.2.7-4a	26
Figure 15.2.7-4b	26
Figure 15.2.7-5a	26
Figure 15.2.7-5b	26
Figure 15.2.7-6a	26
Figure 15.2.7-6b	26
Figure 15.2.7-7	26
Figure 15.2.7-9	Original
Figure 15.2.7-10	Original
Figure 15.2.7-11	Original
Figure 15.2.7-12	Original
Figure 15.2.7-13	1
Figure 15.2.7-14	1
Figure 15.2.7-15	1
Figure 15.2.7-16	1
Figure 15.2.8-1a & Figure 15.2.8-1b	15
Figure 15.2.8-2a & Figure 15.2.8-2b	15
Figure 15.2.8-3a & Figure 15.2.8-3b	15
Figure 15.2.8-4a & Figure 15.2.8-4b	15
Figure 15.2.9-1a & Figure 15.2.9-1b	27
Figure 15.2.9-2a & Figure 15.2.9-2b	27
Figure 15.2.9-3a & Figure 15.2.9-3b	27
Figure 15.2.9-4a & Figure 15.2.9-4b	27
Figure 15.2.10-1	24
Figure 15.2.10-2a	24
Figure 15.2.10-2b	26
Figure 15.2.10-2c	26
Figure 15.2.10-3	24

EFFECTIVE PAGE LISTING

Page	Effective Amendment
Figure 15.2.10-4	24
Figure 15.2.10-5	24
Figure 15.2.11-1a	26
Figure 15.2.11-1b	26
Figure 15.2.11-1c	26
Figure 15.2.11-2	26
Figure 15.2.11-3a	26
Figure 15.2.11-3b	26
Figure 15.2.11-3c	26
Figure 15.2.11-4	26
Figure 15.2.11-5a	26
Figure 15.2.11-5b	26
Figure 15.2.11-5c	26
Figure 15.2.11-6	26
Figure 15.2.11-7a	26
Figure 15.2.11-7b	26
Figure 15.2.11-7c	26
Figure 15.2.11-8	26
Figure 15.2.12-1	Original
Figure 15.2.12-2	Original
Figure 15.2.12-3a	24
Figure 15.2.12-3b	24
Figure 15.2.13-1	Original
Figure 15.2.13-2	Original
Figure 15.2.13-3	Original
Figure 15.2.14-1	Original
Figure 15.2.14-2	Original
15.3-1	18
15.3-2	24
15.3-3	30
15.3-4	30
15.3-5	24
15.3-6	24
15.3-7	28
15.3-8	24
15.3-9	30
15.3-10	24
15.3-11	26
15.3-12	27
Table 15.3.1-1	24
Table 15.3.1-2	24
Table 15.3.4-1	24
Table 15.3.7-1	24
Figure 15.3.1-1	24
Figure 15.3.1-2	24
Figure 15.3.1-3	24
Figure 15.3.1-4	24
Figure 15.3.1-5	24
Figure 15.3.1-6	24
Figure 15.3.1-7	24
Figure 15.3.3-1	Original

EFFECTIVE PAGE LISTING

Page	Effective Amendment
Figure 15.3.3-2	Original
Figure 15.3.3-3	Original
Figure 15.3.3-4	Original
Figure 15.3.3-5	Original
Figure 15.3.4-1a	24
Figure 15.3.4-1b	24
Figure 15.3.4-2a	24
Figure 15.3.4-2b	26
Figure 15.3.4-2c	26
Figure 15.3.7-1a	24
Figure 15.3.7-1b	24
Figure 15.3.7-2a	24
Figure 15.3.7-2b	24
Figure 15.3.7-3a	24
Figure 15.3.7-3b	26
Figure 15.3.7-3c	26
15.4-1	24
15.4-2	24
15.4-3	21
15.4-4	24
15.4-5	24
15.4-6	24
15.4-7	24
15.4-8	25
15.4-9	24
15.4-10	24
15.4-11	21
15.4-12	21
15.4-13	23
15.4-14	24
15.4-15	24
15.4-16	24
15.4-17	24
15.4-18	24
15.4-19	24
15.4-20	21
15.4-21	21
15.4-22	21
15.4-23	24
15.4-24	21
15.4-25	25
15.4-26	21
15.4-27	28
15.4-28	21
15.4-29	26
15.4-30	21
15.4-31	21
15.4-32	24
15.4-33	21
15.4-34	21
15.4-35	24

EFFECTIVE PAGE LISTING

Page	Effective Amendment
15.4-36	24
Table 15.4.1-1 (Sheet 1)	21
Table 15.4.1-1 (Sheet 2)	24
Table 15.4.1-2	24
Table 15.4.1-2a	21
Table 15.4.1-3a	24
Table 15.4.1-3b	24
Table 15.4.1-4	24
Table 15.4.1-5	21
Table 15.4.1-9 (Sheet 1)	13
Table 15.4.1-9 (Sheet 2)	15
Table 15.4.1-9 (Sheet 3)	15
Table 15.4.1-12 (Sheet 1)	13
Table 15.4.1-12 (Sheet 2)	13
Table 15.4.1-12 (Sheet 3)	24
Table 15.4.2-1	24
Table 15.4.4-1	13
Table 15.4.6-1	13
Figure 15.4.1-1	24
Figure 15.4.1-2	24
Figure 15.4.1-3	24
Figure 15.4.1-4	24
Figure 15.4.1-6	24
Figure 15.4.1-7	24
Figure 15.4.1-9	24
Figure 15.4.1-10	24
Figure 15.4.1-11	24
Figure 15.4.1-14	24
Figure 15.4.1-15	24
Figure 15.4.1-16	24
Figure 15.4.1-17	24
Figure 15.4.1-18	24
Figure 15.4.1-19	24
Figure 15.4.1-20	24
Figure 15.4.1-21	24
Figure 15.4.1-22	24
Figure 15.4.2-1	13
Figure 15.4.2-2	13
Figure 15.4.2-3	13
Figure 15.4.2-4	13
Figure 15.4.2-5	13
Figure 15.4.2-6	13
Figure 15.4.2-7	13
Figure 15.4.2-8	13
Figure 15.4.2-9	13
Figure 15.4.2-10	13
Figure 15.4.2-11	13
Figure 15.4.2-12	13
Figure 15.4.2-13	13
Figure 15.4.2-14	13
Figure 15.4.2-15	13

EFFECTIVE PAGE LISTING

Page	Effective Amendment
Figure 15.4.2-16	13
Figure 15.4.2-17	13
Figure 15.4.2-18	13
Figure 15.4.2-19	13
Figure 15.4.2-20	13
Figure 15.4.2-21	13
Figure 15.4.2-22	13
Figure 15.4.2-23	13
Figure 15.4.2-24	13
Figure 15.4.2-25	13
Figure 15.4.2-26	13
Figure 15.4.2-27	13
Figure 15.4.2-28	13
Figure 15.4.2-29	13
Figure 15.4.2-30	13
Figure 15.4.2-31	13
Figure 15.4.2-32	13
Figure 15.4.2-33	13
Figure 15.4.2-34	13
Figure 15.4.2-35	24
Figure 15.4.2-36	24
Figure 15.4.2-37	24
Figure 15.4.2-38	24
Figure 15.4.2-39a & 15.4.2-39b	24
Figure 15.4.2-40a & 15.4.2-40b	24
Figure 15.4.2-41a & 15.4.2-41b	24
Figure 15.4.2-42a & 15.4.2-42b	24
Figure 15.4.4-1	13
Figure 15.4.4-2	13
Figure 15.4.4-3	13
Figure 15.4.4-4	13
Figure 15.4.4-5	13
Figure 15.4.6-1	10
Figure 15.4.6-2	10
Figure 15.4.6-3	10
Figure 15.4.6-4	10
15.5-1	18
15.5-2	24
15.5-3	24
15.5-4	30
15.5-5	18
15.5-6	24
15.5-7	30
15.5-8	30
15.5-9	18
15.5-10	21
15.5-11	21
15.5-12	18
15.5-13	27
15.5-14	21
15.5-15	21

EFFECTIVE PAGE LISTING

Page	Effective Amendment
15.5-16	21
15.5-17	18
15.5-18	18
15.5-19	18
15.5-20	24
15.5-21	25
15.5-22	25
15.5-23	18
15.5-24	26
15.5-25	26
15.5-26	26
15.5-27	25
15.5-28	25
Table 15.5.1-1	18
Table 15.5.2-1	18
Table 15.5.2-2	13
Table 15.5.3-1 (Sheet 1)	13
Table 15.5.3-1 (Sheet 2)	30
Table 15.5.3-2	13
Table 15.5.3-3	27
Table 15.5.3-3A	30
Table 15.5.3-4	30
Table 15.5.3-5	13
Table 15.5.3-6	18
Table 15.5.3-7	30
Table 15.5.3-8 (Sheet 1)	13
Table 15.5.3-8 (Sheet 2)	13
Table 15.5.4-1	18
Table 15.5.5-1 (Sheet 1)	20
Table 15.5.5-1 (Sheet 2)	18
Table 15.5.6-1 (Sheet 1)	26
Table 15.5.6-1 (Sheet 2)	26
Table 15.5.6-1 (Sheet 3)	26
Figure 15.5.1-1	10
Figure 15.5.1-2	10
Figure 15.5.1-3	10
Figure 15.5.3-1	Original
15A-1	18
15A-2	18
15A-3	18
15A-4	18
Table 15A-1	18
Table 15A-2	18
15B-1	13
15B-2	13
15B-3	13
15B-4	13
15B-5	13
15B-6	13
15B-7	13
Table 15B-1	13

EFFECTIVE PAGE LISTING

Page	Effective Amendment
Table 15B-2	13
Table 15B-3	13
Figure 15B-1	10
Figure 15B-2	Original
Figure 15B-3	10
Figure 15B-4	Original
Figure 15B-5	10
Figure 15B-6	10
Figure 15B-7	10
Figure 15B-8	10
Figure 15B-9	10
Figure 15B-10	10
Figure 15B-11	10
15C-1	13
15C-2	13
15C-3	13
15C-4	13
15C-5	13
15C-6	13
15C-7	13
Figure 15C-1	11
15D-1	18
15D-2	26
15D-3	26
Table 15D-1	26
Table 15D-2	18
Table 15D-3	18
CHAPTER 17	
17-1	13
17.1-1	18
17.2-1	19

SEQUOYAH NUCLEAR PLANT
FINAL SAFETY ANALYSIS REPORT UPDATE

LIST OF AMENDMENTS

Amendment Number	Date Submitted to NRC
Updated FSAR Submitted	April 14, 1983
Amendment 1	April 16, 1984
Amendment 2	April 11, 1985
Amendment 3	April 11, 1986
Amendment 4	April 20, 1987
Amendment 5	April 20, 1988
Amendment 6	April 14, 1989
Amendment 7	April 27, 1990
Amendment 8	April 15, 1991
Amendment 9	April 15, 1992
Amendment 10	April 14, 1994
Amendment 11	May 12, 1995
Amendment 12	December 6, 1996
Amendment 13	March 25, 1998
Amendment 14	May 4, 1998
Amendment 15	November 9, 1999
Amendment 16	May 10, 2001
Amendment 17	November 8, 2002
Amendment 18	May 28, 2004
Amendment 19	October 13, 2005
Amendment 20	June 12, 2007
Amendment 21	December 5, 2008
Amendment 22	May 24, 2010
Amendment 23	December 14, 2011
Amendment 24	July 3, 2013
Amendment 25	October 6, 2014
Amendment 26	June 10, 2016
Amendment 27	November 28, 2017
Amendment 28	June 5, 2019
Amendment 29	October 28, 2020
Amendment 30	April 28, 2022

TABLE OF CONTENTS

SECTION	TITLE	PAGE
1.0	INTRODUCTION AND GENERAL DESCRIPTION OF PLANT	
1.1	INTRODUCTION	1.1-1
1.2	GENERAL PLANT DESCRIPTION	1.2-1
1.3	COMPARISON TABLES	1.3-1
1.4	IDENTIFICATION OF AGENTS AND CONTRACTORS	1.4-1
1.5	REQUIREMENTS FOR FURTHER TECHNICAL INFORMATION	1.5-1
1.6	MATERIAL INCORPORATED BY REFERENCE	1.6-1
1.7	LIST OF ABBREVIATIONS	1.7-1
1.8	TECHNICAL QUALIFICATIONS OF APPLICANT (HISTORICAL)	1.8-1
2.0	SITE CHARACTERISTICS	
2.1	GEOGRAPHY AND DEMOGRAPHY	2.1-1
2.2	NEARBY INDUSTRIAL, TRANSPORTATION, AND MILITARY FACILITIES	2.2-1
2.3	METEOROLOGY	2.3-1
2.4	HYDROLOGIC ENGINEERING	2.4-1
APPENDIX 2.4A	FLOOD PROTECTION PLAN	2.4A-1
2.5	GEOLOGY AND SEISMOLOGY	2.5-1
2.6	CONCLUSIONS	2.6-1
3.0	DESIGN CRITERIA - STRUCTURES, COMPONENTS EQUIPMENT AND SYSTEMS	
3.1	CONFORMANCE WITH NRC GENERAL DESIGN CRITERIA	3.1-1
3.2	CLASSIFICATION OF STRUCTURES, SYSTEMS, AND COMPONENTS	3.2-1
3.3	WIND AND TORNADO LOADINGS	3.3-1
3.4	WATER LEVEL (FLOOD) DESIGN	3.4-1
3.5	MISSILE PROTECTION	3.5-1
3.6	PROTECTION AGAINST EFFECTS ASSOCIATED WITH THE POSTULATED RUPTURE OF PIPING	3.6-1
3.7	SEISMIC DESIGN	3.7-1
3.8	DESIGN OF CATEGORY I STRUCTURES	3.8-1
APPENDIX 3.8A	SHELL TEMPERATURE TRANSIENTS	3.8A-1
APPENDIX 3.8B	CONTAINMENT VESSEL PENETRATIONS	3.8B-1
APPENDIX 3.8C	CONTAINMENT ANCHORAGE	3.8C-1
APPENDIX 3.8D	COMPUTER PROGRAMS USED IN STRUCTURAL ANALYSIS	3.8D-1
APPENDIX 3.8E	DESIGN PROCEDURE FOR REINFORCED CONCRETE BLOCK WALLS	3.8E-1
3.9	MECHANICAL SYSTEMS AND COMPONENTS	3.9-1
3.10	SEISMIC DESIGN OF CATEGORY I INSTRUMENTATION AND ELECTRICAL EQUIPMENT	3.10-1
3.11	ENVIRONMENTAL DESIGN OF MECHANICAL AND ELECTRICAL EQUIPMENT	3.11-1
3.12	CONTROL OF HEAVY LOADS	3.12-1
3.13	FLEX RESPONSE SYSTEM	3.13-1

TABLE OF CONTENTS

SECTION	TITLE	PAGE
4.0	REACTOR	
4.1	SUMMARY DESCRIPTION	4.1-1
4.2	MECHANICAL DESIGN	4.2-1
4.3	NUCLEAR DESIGN	4.3-1
4.4	THERMAL AND HYDRAULIC DESIGN	4.4-1
4.5	REACTOR (HTP AND MARK-BW FUEL)	4.5-1
5.0	REACTOR COOLANT SYSTEM AND CONNECTED SYSTEMS	
5.1	SUMMARY DESCRIPTION	5.1-1
5.2	INTEGRITY OF THE REACTOR COOLANT SYSTEM BOUNDARY	5.2-1
5.3	THERMAL HYDRAULIC SYSTEM DESIGN	5.3-1
5.4	REACTOR VESSEL AND APPURTENANCES	5.4-1
5.5	COMPONENT AND SUBSYSTEM DESIGN	5.5-1
5.6	INSTRUMENTATION APPLICATION	5.6-1
6.0	ENGINEERED SAFETY FEATURES	
6.1	GENERAL	6.1-1
6.2	CONTAINMENT SYSTEMS	6.2-1
6.3	EMERGENCY CORE COOLING SYSTEM	6.3-1
6.4	HABITABILITY SYSTEMS	6.4-1
6.5	ICE CONDENSER SYSTEM	6.5-1
APPENDIX 6A	IODINE REMOVAL IN THE ICE CONDENSER SYSTEM	6A-1
6.6	AIR RETURN FANS	6.6-1
6.7	AUXILIARY FEEDWATER SYSTEM	6.7-1
6.8	PUMP AND VALVE INSERVICE TESTING PROGRAM	6.8-1
6.9	MOTOR-OPERATED VALVE PROGRAM - GENERIC LETTER 89-10	6.9-1
7.0	INSTRUMENTATION AND CONTROLS	
7.1	INTRODUCTION	7.1-1
7.2	REACTOR TRIP SYSTEM	7.2-1
7.3	ENGINEERED SAFETY FEATURES ACTUATION SYSTEM	7.3-1
7.4	SYSTEMS REQUIRED FOR SAFE SHUTDOWN	7.4-1
7.5	SAFETY-RELATED DISPLAY INSTRUMENTATION FOR POST ACCIDENT MONITORING (PAM)	7.5-1
7.6	ALL OTHER SYSTEMS REQUIRED FOR SAFETY	7.6-1
7.7	CONTROL SYSTEMS NOT REQUIRED FOR SAFETY	7.7-1
APPENDIX 7A	INSTRUMENTATION IDENTIFICATIONS AND SYMBOLS	7A-1

TABLE OF CONTENTS

SECTION	TITLE	PAGE
8.0	ELECTRIC POWER	
8.1	INTRODUCTION	8.1-1
8.2	OFFSITE POWER SYSTEM	8.2-1
8.3	ONSITE POWER SYSTEM	8.3-1
9.0	AUXILIARY SYSTEMS	
9.1	FUEL STORAGE AND HANDLING	9.1-1
9.2	WATER SYSTEMS	9.2-1
9.3	PROCESS AUXILIARIES	9.3-1
9.4	HEATING, VENTILATING, AND AIR CONDITIONING	9.4-1
9.5	OTHER AUXILIARY SYSTEMS	9.5-1
10.0	STEAM AND POWER CONVERSION SYSTEM	
10.1	SUMMARY DESCRIPTION	10.1-1
10.2	TURBINE GENERATOR	10.2-1
10.3	MAIN STEAM SUPPLY SYSTEM	10.3-1
10.4	OTHER FEATURES OF STEAM AND POWER CONVERSION SYSTEM	10.4-1
11.0	RADIOACTIVE WASTE MANAGEMENT	
11.1	SOURCE TERMS	11.1-1
11.2	LIQUID WASTE SYSTEMS	11.2-1
11.3	GASEOUS WASTE SYSTEMS	11.3-1
11.4	PROCESS AND EFFLUENT RADIOLOGICAL MONITORING SYSTEMS	11.4-1
11.5	SOLID WASTE MANAGEMENT SYSTEM	11.5-1
11.6	OFFSITE RADIOLOGICAL MOITORING PROGRAM	11.6-1
APPENDIX 11A	TRITIUM CONTROL	11A-1
12.0	RADIATION PROTECTION	
12.1	SHIELDING	12.1-1
12.2	VENTILATION	12.2-1
12.3	RADIOLOGICAL CONTROL PROGRAM	12.3-1
12.4	LEAKAGE REDUCTION PROGRAM	12.4-1
13.0	CONDUCT OF OPERATIONS	
13.1	ORGANIZATIONAL STRUCTURE	13.1-1
13.2	TRAINING PROGRAMS	13.2-1
13.3	EMERGENCY PLANNING	13.3-1
13.4	REVIEW AND AUDIT	13.4-1
13.5	SITE INSTRUCTIONS AND SECTION INSTRUCTION LETTERS	13.5-1
13.6	PLANT RECORDS	13.6-1
13.7	NUCLEAR SECURITY	13.7-1
13.8	TECHNICAL REQUIREMENTS MANUAL	13.8-1
13.9	LICENSE RENEWAL PROGRAM	13.9-1

TABLE OF CONTENTS

SECTION	TITLE	PAGE
14.0	INITIAL TESTS AND OPERATIONS	
14.1	TEST PROGRAM	14.1-1
14.2	AUGMENTATION OF PLANT STAFF FOR INITIAL TESTS AND OPERATIONS (HISTORICAL)	14.2-1
15.0	ACCIDENT ANALYSES	
15.1	CONDITION I - NORMAL OPERATION AND OPERATIONAL TRANSIENTS	15.1-1
15.2	CONDITION II - FAULTS OF MODERATE FREQUENCY	15.2-1
15.3	CONDITION III - INFREQUENT FAULTS	15.3-1
15.4	CONDITION IV - LIMITING FAULTS	15.4-1
15.5	ENVIRONMENTAL CONSEQUENCES OF ACCIDENTS	15.5-1
APPENDIX 15A	DOSE MODELS USED TO EVALUATE THE ENVIRONMENTAL CONSEQUENCES OF ACCIDENTS	15A-1
APPENDIX 15B	SENSITIVITY ANALYSIS OF LOCA DOSE CALCULATIONS (HISTORICAL INFORMATION)	15B-1
APPENDIX 15C	FUEL ROD MODEL DISCUSSION (HISTORICAL INFORMATION)	15C-1
APPENDIX 15D	PRIMARY COOLANT ACTIVITY MODEL USED TO EVALUATE THE RADIOLOGICAL CONSEQUENCES OF ACCIDENTS	15D-1
16.0	TECHNICAL SPECIFICATION (SEE SEPARATE DOCUMENT)	
17.0	QUALITY ASSURANCE	
17.1	A) QUALITY ASSURANCE DURING DESIGN AND CONSTRUCTION B) WESTINGHOUSE QUALITY ASSURANCE PROGRAM	17.1-1
17.2	QUALITY ASSURANCE PROGRAM FOR STATION OPERATION	17.2-1

TABLE OF CONTENTS

Section	Title	Page
1.0	INTRODUCTION AND GENERAL DESCRIPTION OF PLANT	
1.1	INTRODUCTION	1.1-1
1.1.1	LICENSING BASIS DOCUMENTS	1.1-1
1.1.2	PROGRAMMATIC COMMITMENTS	1.1-2
1.2	GENERAL PLANT DESCRIPTION	1.2-1
1.2.1	SITE CHARACTERISTICS	1.2-1
1.2.1.1	Location	1.2-1
1.2.1.2	Demography	1.2-1
1.2.1.3	Meteorology	1.2-1
1.2.1.4	Hydrology	1.2-1
1.2.1.5	Geology	1.2-1
1.2.1.6	Seismology	1.2-1
1.2.2	FACILITY DESCRIPTION	1.2-2
1.2.2.1	Design Criteria	1.2-2
1.2.2.2	Nuclear Steam Supply System	1.2-2
1.2.2.3	Control and Instrumentation	1.2-3
1.2.2.4	Fuel Handling System	1.2-4
1.2.2.5	Waste Processing System	1.2-4
1.2.2.6	Steam and Power Conversion System	1.2-5
1.2.2.7	Plant Electrical System	1.2-5
1.2.2.8	Cooling Water	1.2-6
1.2.2.9	Component Cooling System and Essential Raw Cooling Water	1.2-7
1.2.2.10	Chemical and Volume Control System	1.2-7
1.2.2.11	Sampling and Water Quality System	1.2-8
1.2.2.12	Ventilation	1.2-8
1.2.2.13	Fire Protection System	1.2-9
1.2.2.14	Compressed Air System	1.2-9
1.2.2.15	Engineered Safety Features	1.2-9
1.2.2.16	Shared Facilities and Equipment-Safety Related	1.2-10
1.2.3	GENERAL ARRANGEMENT OF MAJOR STRUCTURES AND EQUIPMENT	1.2-11
1.3	COMPARISON TABLES	1.3-1
1.3.1	COMPARISONS WITH SIMILAR FACILITY DESIGNS	1.3-1
1.3.2	COMPARISONS OF FINAL AND PRELIMINARY DESIGNS	1.3-1
1.4	IDENTIFICATION OF AGENTS AND CONTRACTORS	1.4-1
1.5	REQUIREMENTS FOR FURTHER TECHNICAL INFORMATION	1.5-1

1.5.1	PROGRAMS REQUIRED FOR PLANT OPERATION	1.5-1
1.5.2	PROGRAMS NOT REQUIRED FOR PLANT OPERATION	1.5-3
1.5.2.1	Burnable Poison Program	1.5-3
1.5.2.2	Fuel Development Program for Operation at High Power Densities	1.5-4
1.5.2.3	FLECHT (Full Length Emergency Core Cooling Heat Transfer Test)	1.5-4
1.5.2.4	Loss of Coolant Analysis Program	1.5-4
1.5.2.5	Reactor Vessel Thermal Shock	1.5-4
1.5.2.6	Blowdown Forces Program	1.5-5
1.5.3	17 x 17 FUEL ASSEMBLY VERIFICATION TEST	1.5-5
1.5.3.1	Rod Cluster Control Spider Tests	1.5-6
1.5.3.2	Grid Tests	1.5-6
1.5.3.3	Fuel Assembly Structural Tests	1.5-7
1.5.3.4	Guide Tube Tests	1.5-7
1.5.3.5	Prototype Assembly Tests	1.5-7
1.5.3.6	Departure from Nucleate Boiling	1.5-8
1.5.3.7	Incore Flow Mixing	1.5-8
1.5.4	INPILE FUEL DENSIFICATION	1.5-8
1.5.5	LOCA HEAT TRANSFER TESTS (17 x 17)	1.5-9
1.5.5.1	Blowdown Heat Transfer Testing	1.5-9
1.5.5.2	Results	1.5-11
1.5.5.3	Single Rod Burst Test (SRBT)	1.5-11
1.5.6	REFERENCES	1.5-12
1.6	MATERIAL INCORPORATED BY REFERENCE	1.6-1
1.6.1	TOPICAL REPORTS	1.6-1
1.7	LIST OF ABBREVIATIONS	1.7-1
1.7.1	ABBREVIATIONS OF ORGANIZATIONS	1.7-1
1.7.2	ABBREVIATIONS AND SYMBOLS	1.7-2
1.8	TECHNICAL QUALIFICATIONS OF APPLICANT (HISTORICAL)	1.8-1

LIST OF TABLES

Number	Title
1.3.1-1	Design Comparison (Excluding Secondary Cycle)
1.3.1-2	Design Comparison - Secondary Cycle
1.3.2-1	Major Design Changes Since Submittal of the PSAR
1.6.1-1	Westinghouse and Framatome Topical Reports Incorporated by Reference

LIST OF FIGURES

Number	Title
1.2.3-1	Equipment Plans - Roof Plans
1.2.3-2	Equipment Plan - EL 749.0 and Above
1.2.3-3	Equipment Plan - EL 734.0 and EL 732.0
1.2.3-4	Equipment Plan - EL 714.0 and EL 706.0
1.2.3-5	Equipment Plan - EL 690.0 and EL 685.0
1.2.3-6	Equipment Plan - EL 669.0 and EL 662.5
1.2.3-7	Equipment Plan - EL 727.5, EL 706.0, EL 653.0, and EL 643.0
1.2.3-8	Equipment - Plant Section
1.2.3-9	Equipment - Auxiliary Building Section
1.2.3-10	Equipment - Turbine Building Section
1.2.3-11	Equipment - Reactor Building
1.2.3-12	Equipment - Reactor Building
1.2.3-13	Equipment - Reactor Building
1.2.3-14	Equipment - ERCW Pumping Station
1.2.3-15	Equipment - ERCW Pumping Station
1.2.3-16	Equipment - ERCW Pumping Station
1.2.3-17	Equipment - Diesel Generator Building
1.2.3-18	Equipment - CCW Pumping Station
1.2.3-19	Equipment - CCW Pumping Station

1.0 INTRODUCTION AND GENERAL DESCRIPTION OF PLANT

1.1 INTRODUCTION

This Final Safety Analysis Report is in support of the Tennessee Valley Authority (TVA) facility operating licenses for a two-unit nuclear power plant located approximately 7.5 miles northeast of Chattanooga at the Sequoyah site in Hamilton County, Tennessee.

This facility has been designated the Sequoyah Nuclear Plant (SNP). The plant has been designed, built, and is operated by TVA. Each of the two identical units employs a Pressurized Water Reactor Nuclear Steam Supply System with four coolant loops furnished by Westinghouse Electric Corporation. These units are similar to those of the Watts Bar Nuclear Plant, and other plants reviewed by the U.S. Nuclear Regulatory Commission.

Each of the two reactor cores is rated at 3,455 MWt and, at this core power, each NSSS will operate at 3,467 MWt. The additional 12 MWt is due to the contribution of heat of the Primary Coolant System from nonreactor sources, primarily reactor coolant pump heat. Each of the reactor cores has an Engineered Safeguards design rating of approximately 3565 MWt and each NSSS 3577 MWt. The total generator output is approximately 1,199 MWe for the rated core power.

The containment for each of the reactors consists of a freestanding steel vessel with an ice condenser and separate reinforced concrete shield building. The ice condenser was designed by the Westinghouse Electric Corporation. The freestanding containment vessel was designed by Chicago Bridge & Iron (CBI).

Unit 1 began commercial operation in July 1, 1981. Unit 2 began commercial operation on June 1, 1982.

1.1.1 LICENSING BASIS DOCUMENTS

The following documents are typical documents submitted periodically to NRC. Implementation of changes to these documents without NRC approval may be controlled by regulation or the plant operating license. The following list provides references on the review and approval requirements for the listed documents.

DOCUMENT	REGULATORY OR REQUIREMENT
Updated Final Safety Analysis Report	10 CFR 50.59 10 CFR 50.71(e)
Technical Requirements Manual	Technical Requirement 6.0 10 CFR 50.59 10 CFR 50.36(c)(2)(ii)
Technical Specification Bases	10 CFR 50.59
Organizational Topical Report	10 CFR 50.71(e)
Quality Assurance Plan	10 CFR 50.54(a)(3)

DOCUMENT	REGULATORY OR REQUIREMENT
Fire Protection Report	Unit 1 License Condition 2.C.16 Unit 2 License Condition 2.C.13
Offsite Dose Calculation Manual	Technical Specification 5.5.1
Physical Security Plan	10 CFR 50.54(p)
Radiological Emergency Plan	10 CFR 50.54(q)
Core Operating Limits Report	Technical Specification 5.6.3
Pressure Temperature Limits Report	Technical Specification 5.6.4
Licensing Requirements for the Independent Storage of Spent Nuclear Fuel and High-Level Radioactive Waste	10 CFR 72
General License Issued	10 CFR 72.210
Conditions of General License Issued Under 10 CFR 72.210	10 CFR 72.212

1.1.2 PROGRAMMATIC COMMITMENTS

The following programmatic commitments are incorporated to ensure control under the licensing basis process.

Technical Specification Change (TSC 04-08)

TVA is using an industry database (e.g., the industry's Consolidated Data Entry [CDE] program, currently being developed and maintained by the Institute of Nuclear Power Operations) to send to the NRC the operating data (for each calendar month) that is described in Generic Letter 97-02, "Revised Contents of the Monthly Operating Report," by the last day of the month following the end of each calendar quarter. This regulatory commitment will be implemented to prevent any gaps in the monthly operating statistics and shutdown experience provided to the NRC (i.e., data for all months will be provided using one or both systems monthly operating reports and CDE).

1.2 GENERAL PLANT DESCRIPTION

1.2.1 Site Characteristics

1.2.1.1 Location

The plant site, consisting of approximately 525 acres, is located in southeastern Tennessee on the west shore of Chickamauga Lake approximately 7.5 miles northeast of Chattanooga.

1.2.1.2 Demography

The population density of the area surrounding the site is relatively low. The site consists of an owner controlled exclusion area. A low population zone surrounds the plant site.

1.2.1.3 Meteorology

Meteorological data has been collected since April 1971 at the site. Selected data has been used for the description of the local weather and for the calculation of the dispersion factors. In addition, data from stations within 75 miles of the site was used to calculate the regional climatology. The probability of a tornado occurrence at the site is estimated to be about once in 6,000 years. Despite this low probability, the design of plant Category I structures included consideration of the effects of tornadic winds.

1.2.1.4 Hydrology

The Design Basis Flood could exceed plant grade at the plant site. The plant grade has been established at approximately elevation 705 feet. The flood elevation includes wave runup on vertical surfaces resulting from an over water wind. The plant design considered the effects of this flood and the plant can be placed in a safe shutdown condition before the flood exceeds plant grade. The potential for floods resulting from seismically induced dam failure and/or dam failure permutations has been investigated. The results indicate that floods of this type will exceed plant grade, but to an elevation lower than the Design Basis Flood.

1.2.1.5 Geology

The controlling feature of the geologic structure at the site is the Kingston thrust fault which developed some 250 million years ago. The fault has been inactive for many millions of years and recurrence of movement is not expected. The fault crosses to the northwest of the site area; however, it was not involved directly in the foundation for any of the major plant structures.

1.2.1.6 Seismology

The seismic history of the southeastern United States indicates that there has been no significant seismic activity originating in the site area. The Safe Shutdown Earthquake (SSE) for the plant has been established as having a maximum horizontal acceleration of 0.18g and a simultaneous maximum vertical acceleration of 0.12g.

1.2.2 Facility Description

1.2.2.1 Design Criteria

The design criteria for the Sequoyah Nuclear Plant are discussed in Section 3.1.

1.2.2.2 Nuclear Steam Supply System

The Nuclear Steam Supply System consists of a reactor and four closed reactor coolant loops connected in parallel to the reactor vessel. Each loop contains a reactor coolant pump, a steam generator, loop piping, and instrumentation. The Nuclear Steam Supply System also contains an electrically heated pressurizer and certain auxiliary systems.

High pressure water circulates through the reactor core to remove the heat generated by the nuclear chain reaction. The heated water exits the reactor vessel and passes via the coolant loop piping to the steam generators. Here it gives up its heat to the feedwater to generate steam for the turbine generator. The cycle is completed when the water is pumped back to the reactor vessel.

The inherent design of the pressurized water, closed-cycle reactor minimizes the quantities of fission products released to the atmosphere. Three barriers exist between the fission product accumulation and the environment. These are the fuel cladding, the reactor vessel and coolant loops, and the reactor containment. The consequences of a breach of the fuel cladding are greatly reduced by the ability of the uranium dioxide lattice to retain fission products. Escape of fission products through fuel cladding defect would be contained within the pressure vessel, loops and auxiliary systems. Breach of these systems or equipment would release the fission products to the reactor containment where they would be retained. The reactor containment is designed to adequately retain these fission products under the most severe accident conditions, as analyzed in Chapter 15.

The reactor core, with its related Control and Protection System, is designed to function throughout its design lifetime without exceeding the acceptable fuel damage limits defined in Section 4.2. The core design, together with process and residual heat removal systems, provides for this capability under all expected conditions of normal operation with appropriate margins for uncertainties and anticipated transient situations, including, as examples, the effects of the loss of reactor coolant flow, turbine trips due to steam and power conversion system malfunctions, and loss of external electrical load.

The reactor core is a multi-region cycled core. The fuel rods are zirconium alloy tubes containing slightly enriched uranium dioxide fuel. The fuel assembly is a canless type with the basic assembly consisting of the Rod Cluster Control (RCC) guide thimbles welded to the top nozzle and mechanically fastened to the grids and bottom nozzle. The fuel rods are held by the spring clip grids in this assembly. The internals, consisting of the upper and lower core support structure, are designed to support, align, and guide the core components, direct the coolant flow to and from the core components, and to support and guide the in-core instrumentation. Dissolved boric acid is used as reactivity control device to minimize the use of RCC assemblies and assist in the control of power peaking.

Full length RCC assemblies and burnable poison rods are inserted into the guide thimbles of the fuel assemblies. The control rod drive mechanisms for the full length RCC assemblies are of the magnetic latch type. The latches are controlled by three magnetic coils. They are so designed that upon a loss of power to the coils, the RCC assembly is released and falls into the core by gravity to shut down the reactor.

Pressure in the system is controlled by the pressurizer, where system pressure is maintained through the use of electrical heaters and sprays. Steam can either be formed by the heaters, or condensed by a pressurizer spray to minimize pressure variations due to contraction and expansion of the coolant. Instrumentation used in the Reactor Coolant system is described in Chapter 7. Spring-loaded safety valves and power-operated relief valves for overpressure protection are connected to the pressurizer and discharge to the pressurizer relief tank, where the discharge steam is condensed and cooled by mixing with water.

The reactor coolant pumps are Westinghouse vertical, single-stage, mixed flow pumps of the shaft-seal type. The power supply system to the pumps is designed so that adequate coolant flow is maintained to cool the reactor core under all credible circumstances.

The original steam generators (OSG) were Westinghouse vertical U-tube units which contain Inconel tubes. Integral moisture separation equipment reduces the moisture content of the steam. The replacement steam generators (RSG) for Unit 1and Unit 2 are similar in design and are supplied by Westinghouse Electric Company, Combustion Engineering Nuclear Power LLC (CENP). The RSG's on Unit 1 were installed during the U1C12 RFO (March - May 2003). The RSG's on Unit 2 were installed during the U2C18 RFO (October - December 2012).

The reactor coolant piping and the pressure-containing and heat transfer surfaces in contact with reactor water are stainless steel clad except the steam generator tubes and fuel tubes, which are Inconel and zirconium alloy, respectively. Reactor core internals, including control rod drive shafts, are stainless steel.

Auxiliary system components are provided to charge the Reactor Coolant System and add makeup water, purify reactor coolant water, provide chemicals for corrosion inhibition and reactor control, cool system components, remove decay heat when the reactor is shut down, and provide for emergency coolant injection.

1.2.2.3 Control and Instrumentation

The reactor is controlled by temperature coefficients of reactivity, control rod clusters, and a soluble neutron absorber, boron, in the form of boric acid.

Instrumentation and controls are provided to monitor and maintain essential reactor facility operating variables such as neutron flux, primary coolant pressure, temperature, and control rod positions within prescribed operating ranges.

The non-neutronic process and containment instrumentation measures temperatures, pressure, flows, and levels in the Reactor Coolant system, steam systems, containment, and auxiliary systems. Process variables which are required on a continuous basis for the startup, power operation, and shutdown of the plant are monitored in a controlled access area. The quantity and types of process instrumentation provided are adequate for safe and orderly operation of all systems and processes over the full operating range of the plant.

Reactor protection is achieved by defining a region of power and coolant temperature conditions allowed by the principal tripping functions: the overpower delta temperature trip, the overtemperature delta temperature trip, and the nuclear overpower trip. The allowable operating region within these trip settings is designed to prevent any combination of power, temperatures, and pressure which would result in exceeding departure from nucleate boiling ratio limits. Additional tripping functions such as a high-pressurizer pressure trip, low-pressurizer pressure trip, high-pressurizer water-level trip, loss of coolant flow trip, steam generator low-low water-level trip, turbine trip, safety injection trip, nuclear source and intermediate range trips, neutron flux rate trips, and manual trip are provided to support the principal tripping functions for specific accident conditions and mechanical failures. Independent and redundant channels are combined in logic circuits which improve tripping reliability and minimize trips from spurious causes. Protection interlocks, initiation signals to the Safety Injection System, containment isolation signals, and turbine runback signals further assist in plant protection during operation.

1.2.2.4 Fuel Handling System

New fuel assemblies are removed one at a time from the shipping cask and stored dry in the fuel storage racks located in the fuel storage area or wet in the spent fuel pool. New fuel is delivered to the reactor vessel by placing a fuel assembly into the new fuel elevator, lowering it into the transfer canal, storing it in the spent fuel pit or taking it through the fuel transfer system and placing it in the core by the use of the manipulator crane. Spent fuel is removed from the reactor vessel by the manipulator crane and placed in the Fuel Transfer System. In the spent fuel pool, the fuel is removed from the Transfer System and placed in the storage racks. After a suitable decay period, the fuel may be removed from storage and loaded in a shipping cask for removal from the site or the spent fuel assemblies may be placed in interim storage at SQN Independent Spent Fuel Storage Installation (ISFSI) (Section 9.1.5).

Spent fuel is handled entirely under water from the time it leaves the reactor vessel until it is placed in a cask for shipment from the site or the spent fuel assemblies may be placed in interim storage at SQN Independent Spent Fuel Storage Installation (ISFSI) (Section 9.1.5). Underwater transfer of spent fuel provides an effective, economic and transparent shield, as well as a reliable cooling medium for removal of decay heat.

1.2.2.5 Waste Processing Systems

The Waste Processing System provides equipment necessary for controlled treatment, and preparation for retention or disposal of liquid, gaseous, and solid wastes produced as a result of reactor operation. The Liquid Waste System collects and processes reactor grade water, removes or concentrates radioactive constituents and processes them until suitable for release or shipment offsite. The Gaseous Waste Processing System functions to remove fission product gases from the reactor coolant. The system also collects the gases from

various tanks and processes. The waste processing systems, including both liquid and gas, are designed to ensure that the quantities of radioactive releases from the total plant to the surrounding environment will not exceed the 10 CFR 20 limits and are as low as practicable.

The solid waste management system functions to prepare slurries and solid radwaste for shipment or for temporary onsite storage in compliance with the requirements in 10 CFR 61, 10 CFR 71, and 49 CFR 170 through 178. Waste inputs are divided into two categories: dry active waste (DAW) and wet active waste (WAW). DAW is further divided into compactible and non-compactible wastes. WAW is primarily composed of two types of waste: evaporator concentrates and spent resins.

1.2.2.6 Steam and Power Conversion System

The Steam and Power Conversion System consists of a turbine-generator, main condenser, vacuum pumps, Turbine Seal System, Turbine Bypass System, hot well pumps, condensate booster pumps, main feed pumps, main feed pump turbines (MFPT), condenser-feedwater heater, feedwater heaters, heater drain pumps, and Condensate Storage System. The system is designed to convert the heat produced in the reactor to electrical energy through conversion of a portion of the energy contained in the steam supplied from the steam generators, to condense the turbine exhaust steam into water, and to return the water to the steam generator as feedwater.

Each turbine generator unit consists of a tandem arrangement of one double-flow high-pressure turbine and three double-flow low-pressure turbines driving a direct-coupled generator at 1800 RPM. The generator has a nameplate rating of 1,356,200 KVA at 0.9 PF with 75 psig hydrogen pressure. Each unit employs a horizontal, single pressure, triple shell, single pass surface condenser. Return to the steam generator is through three stages of feedwater pumping and seven stages of feedwater heating. Safety relief valves and power operated relief valves, as well as a turbine bypass to the condenser are provided in the steam lines.

1.2.2.7 Plant Electrical System

For Unit 1 and 2, the Plant Electric Power System consists of the main generator, the generator circuit breaker, the unit station service transformers, the common station service transformers, the main bank transformers, the diesel generators, the batteries, and the electric distribution system. The main generator supplies electrical power through isolated-phase buses to the main bank transformers and the unit station service transformers located adjacent to the Turbine Building. The primaries of the unit station service transformers are connected to the isolated-phase bus at a point between the generator circuit breaker terminals and the low-voltage connection of the main bank transformers. During normal operations the auxiliary power is typically supplied by unit power through the unit station service transformers. During startup and shutdown the auxiliary power is typically supplied by the 500-kV system through the main bank and unit station service transformers for Unit 1 and the 161-kV system through the main bank and unit station service transformers for Unit 2. During startup, shutdown, and normal operations auxiliary power may be supplied by the 161-kV system through the common station service transformers.

The standby onsite power is supplied by four diesel generators. The power to the 6.9-kV common boards is supplied by the 161-kV system through the common station service transformers.

The Plant Distribution System can receive AC power from either the Unit 1 or 2 nuclear power unit, the two independent preferred (offsite) power circuits, or the four diesel-generator standby (onsite) power sources and distribute it to safety-related and nonsafety-related loads as required. The two preferred circuits have access to the TVA transmission network which in turn has multiple interties with other transmission networks.

The safety-related loads for the plant are divided into two redundant groups. Each load group has access to each of the two preferred offsite sources. One load group with its two associated diesel generators can provide all safety functions in each unit. The electrical systems are described in Section 8.2 and 8.3.

The vital AC and DC Control and Instrument Power system consists of four 125V batteries, four battery chargers and eight 120V AC inverters with their respective safety-related loads. A spare 125V battery and spare chargers are available as needed. Each channel has a spare inverter which can be manually aligned to replace the Unit 1 or Unit 2 inverter. The 125V DC Distribution System is a safety-related system which receives power from four independent battery chargers and four 125V DC batteries and distributes it to safety-related loads of both units. The 120V AC Distribution System receives power from eight independent inverters and distributes it to the safety-related loads of both units. These systems are described in Section 8.3.

1.2.2.8 Cooling Water

The Condenser Circulating Water System provides cooling water to the main turbogenerator condensers and auxiliary cooling equipment. Water from this system may also be used to dilute and disperse low level radioactive liquid waste. For each unit, three pumps are provided in the intake pumping station located at the land end of the intake channel. Water flows into the intake channel under a skimmer wall from the river. Each pump has a separate suction well with individual traveling screens and discharges through a motor-operated butterfly valve into a common single square conduit tunnel which carries the cooling water to the condensers. Unit 1 was started up before completion of the separate, permanent ERCW pumping station. Unit 1 startup utilized the ERCW pumps in the Intake Pumping Station which houses the permanent condenser circulating water (CCW) pumps. The Main Cooling Towers and the permanent ERCW pumping station were completed prior to startup of Unit 2. The new ERCW station is located offshore in the lake, at the skimmer wall, and is capable of taking suction from the river channel on loss of the downstream dam.

Unit 1 operation before startup of unit 2 utilized once-through CCW and ERCW cooling, the discharge water passing through an embayment and a diffuser discharge system in the lake. The transition to the Main Cooling Towers and the permanent ERCW pumping station was made prior to startup of Unit 2.

With the Main Cooling Towers operable, the CCW System may be operated in any of three modes as follows:

1. Once-through as described above, with the discharge stream passing through the Cooling Tower supply pumping station.

2. Helper mode in which the main condenser discharge stream is pumped by the Cooling Tower supply pumps into one or both natural draft Cooling Towers where the heat load is dumped to the atmosphere. Seven pumps are provided. The cooled stream then passes through the holding pond and diffuser pipes as in the once-through mode.

3. Closed cycle, in which the discharge stream is returned from the Cooling Towers to the CCW intake pumping station forebay, from which it is recycled.

1.2.2.9 Component Cooling System & Essential Raw Cooling Water

The Component Cooling system (CCS) is the intermediate, closed-loop cooling water between various components handling Reactor Coolant system fluids, and the Essential Raw Cooling Water (ERCW). Two basic purposes of the CCS are:

1. To remove heat from the components and heat exchangers that are handling radioactive fluids.

2. To serve as a buffer against leakage from the nuclear systems to the ERCW and thus to the environment.

The CCS system is vital to plant operation. The system is designed as a safety system with components necessary for heat removal from other safety systems.

The ERCW system is the cooling water supply and discharge to the ultimate heat sink, the Tennessee River.

1.2.2.10 Chemical and Volume Control System

The Chemical and Volume Control System (CVCS) performs the following functions:

1. Fills the Reactor Coolant system (RCS).

2. Provides a source of high pressure water for pressurizing the RCS when cold.

3. Maintains the water level in the pressurizer when the RCS is hot.

4. Reduces the concentration of corrosion and fission products in the reactor coolant.

5. Adjusts the boric acid concentration of the reactor coolant for chemical shim control.

6. Provides high pressure seal water for the reactor coolant pump seals.

7. Provides a means of reactor coolant water chemistry control.

During power operation, a continuous feed-and-bleed stream is normally maintained to and from the RCS. Letdown water leaves the RCS and flows through the shell side of the regenerative heat exchanger where it gives up its heat to makeup water being returned to the RCS. The letdown water then flows through the orifices where its pressure is reduced, then through the letdown heat exchanger, followed by a second pressure reduction by a

low-pressure letdown valve. The letdown normally flows through a mixed bed demineralizer, where ionic impurities are removed, then flows either through the cation demineralizers or directly through the reactor coolant filter, and into the volume control tank via a spray nozzle. The vapor space in the volume control tank normally contains hydrogen which dissolves in the coolant. Fission gases can be removed from the system by venting of the volume control tank.

The charging pumps take the coolant from the volume control tank and send it along two parallel paths: (1) to the RCS through the tube side of the regenerative heat exchanger and (2) to the seals of the reactor coolant pumps. Some RCS seal water flows into the RCS and the remainder leaves the pumps as seal leakage. From the pumps, the leakage water goes to the seal water heat exchanger and then returns for another circuit. If the normal letdown and charging path through the regenerative heat exchanger is not operable, water injected into the RCS through the reactor coolant pump seals is returned via the excess letdown heat exchanger.

Surges from the RCS accumulate in the volume control tank unless a high water level in the tank causes flow to be diverted to the Hold Up Tanks.

Makeup to the CVCS comes from the following sources:

1. Demineralized and deaerated water supply, when the concentration of the dissolved neutron absorber is to be reduced.

2. Boric acid tank, when the concentration of dissolved neutron absorber is to be increased.

3. A blend of demineralized and deaerated water and concentrated boric acid to match or regulate the reactor coolant boron concentration for normal plant makeup.

4. Refueling water storage tank for emergency makeup of borated water.

5. Chemical mixing tank for small quantities of hydrazine for oxygen scavenging or lithium hydroxide for pH control.

1.2.2.11 Sampling and Water Quality System

The Sampling and Water Quality System provides the equipment necessary to provide required process samples for laboratory analysis. These analyses provide the essential chemical and radiochemical data required for the operation of the various process systems in each of the two units.

1.2.2.12 Ventilation

The internal environments of the various buildings of the plant are controlled within acceptable limits for safety, comfort, and equipment protection by several heating, cooling, and ventilating systems. Filtration is provided in exhaust systems as required to reduce contaminants.

Heating systems involve both electric and hot water systems while cooling utilizes fan coil units supplied with direct expansion, chilled water, or raw water coils.

Ventilation is, for the most part, by both supply and exhaust with central intakes and exhausts for proper treatment of the air.

Redundant equipment is provided for safety-related equipment.

1.2.2.13 Fire Protection System

The Fire Protection system will provide a reliable water and CO2 system to extinguish fires both inside and outside the buildings. The systems are designed to provide early detection and extinguishing of fires with an overall objective of minimizing fire hazards and limiting the consequences in the event of a fire. The Fire Protection System is discussed in the Fire Protection Report (see 9.5.1).

1.2.2.14 Compressed Air System

The Compressed Air System is common to both units and is divided into two subsystems: the station control and service air system, and the auxiliary control air system. The station control and service air system supplies compressed air for general plant service, instrumentation, testing, and control. The auxiliary air systems provide, as a minimum, sufficient air for an orderly plant shutdown, including Safe Shutdown Earthquake and Maximum Possible Flood. Only the auxiliary air systems are considered to be Engineered Safety Features. For detailed description see Subsection 9.3.1.

1.2.2.15 Engineered Safety Features

Several Engineered Safety Features have been incorporated into the plant design to reduce the consequences of a loss-of-coolant accident. One of these safety features is an Emergency Core Cooling System (ECCS) which automatically delivers borated water via the cold legs to the reactor core for continued cooling and for negative reactivity insertion following an accidental steam release. Another safety feature which has been included is the Ice Condenser Containment system. Basically, this system provides for very rapid absorption of the energy released from the Reactor Coolant System in the improbable event of a loss-of-coolant accident. The energy is absorbed by condensing steam in a low temperature heat sink, consisting of a suitable quantity of ice permanently stored inside the containment. The ice containment system markedly reduces the peak containment pressure that would otherwise result in the event of a loss-of-coolant accident. The peak pressure is reduced to an even lower value within a few minutes. The system also removes radioactive iodine from the containment atmosphere by the action of sodium tetraborate impregnated ice.

There are several other systems which help mitigate the consequences of a LOCA by aiding the systems mentioned above or by the performance of other specific functions. The first of these is the Containment Spray System which sprays cool water into the containment atmosphere to insure that the containment pressure limit is not exceeded. The air return

fans also aid in the operation of the Containment Spray System and the ice condenser by returning to the lower compartment air which is displaced through the ice condenser into the upper compartment. This system also limits hydrogen concentration by ensuring a flow of air in potentially stagnated regions. The containment isolation systems maintain containment integrity by isolating systems that pass through the containment as required. The radioactivity that may be released in the containment will be confined there by this system.

To help reduce radioactive nuclide releases to the atmosphere, this plant is provided with gas treatment systems. The Emergency Gas Treatment System and the Auxiliary Building Gas Treatment System establish and maintain the air pressure below atmospheric in the Shield Building annulus and the Auxiliary Building Secondary Containment Enclosure (ABSCE), respectively. These systems reduce the concentration of radioactive nuclides in the air released from the annulus and the ABSCE.

1.2.2.16 Shared Facilities and Equipment-Safety Related

Separate and similar systems and equipment are provided for each unit of the two unit Sequoyah Nuclear Plant when required. In certain instances, systems or some components of a system are shared by both units. A common control room and Auxiliary Building is provided with shared HVAC and air cleanup systems. Other principal components/systems which are shared are identified below.

System	Components Shared	Quantity Provided
Chemical and Volume	Boric Acid Tanks	3
Control System	Boric Acid Transfer Pumps	4
Component Cooling System	Pump	Total of 5, up to 3 shared
	Heat Exchangers	Total of 6- two are shared.
Spent Fuel Pit Cooling System	Spent Fuel Pit	1
	Spent Fuel Pit Pumps	3
	Spent Fuel Pit Filter	1
	Spent Fuel Pit Heat Exchanger	2
	Refueling Water Purification Pumps	2
	Refueling Water Filters	2
Waste Disposal System	A common Waste Disposal System is used for the two units. Each containment structure has its own reactor coolant drain tank and containment sump and each is serviced by two reactor coolant drain tank pumps. All other waste disposal equipment is sized to or contracted to adequately serve two units and common Auxiliary and Service Building.	

System	Components Shared	Quantity Provided
Emergency Gas Treatment Systems and Air Cleanup Systems	Portions of the Air Cleanup Subsystem of the Gas Treatment Systems shared components include ducting, air purification filter and absorbers, fans and flow control dampers.	
Essential Raw Cooling Water System	The water supply and distribution system is essentially common to both units.	
Standby AC power System	The Standby AC Power System supplies power to both units.	
Vital 125V DC Control Power System	Four 125V Vital Batteries and Boards, each supply two static inverters of the Vital 120V AC Control Power system on each unit. Each channel has a spare inverter which can be manually aligned to replace the Unit 1 or Unit 2 Inverter. A spare vital battery is also provided as needed.	
Offsite Power System (Preferred Power Supply)	The offsite power grid serves as the preferred power supply for both units.	

1.2.3 General Arrangement of Major Structures and Equipment

The major structures are two Reactor Buildings, a Turbine Building, Auxiliary Building, a Control Building, a Service and Office Building, a Diesel Generator Building, an Intake Pumping Station, ERCW Pumping Station, two natural draft Cooling Towers, and an Independent Spent Fuel Storage Installation (ISFSI) (Section 9.1.5). The arrangement of these structures is shown in Figure 2.1.2-1. Plant arrangement plans and cross sections are presented in Figures 1.2.3-1 through 1.2.3-19.

Security-Related Information - Figure 1.2.3-1 Withhold Under 10 CFR 2.390

Security-Related Information - Figure 1.2.3-2 Withhold Under 10 CFR 2.390

Security-Related Information - Figure 1.2.3-3 Withhold Under 10 CFR 2.390

Security-Related Information - Figure 1.2.3-4 Withhold Under 10 CFR 2.390

Security-Related Information - Figure 1.2.3-5 Withhold Under 10 CFR 2.390

Security-Related Information - Figure 1.2.3-6 Withhold Under 10 CFR 2.390

Security-Related Information - Figure 1.2.3-7 Withhold Under 10 CFR 2.390

Security-Related Information - Figure 1.2.3-8 Withhold Under 10 CFR 2.390

Security-Related Information - Figure 1.2.3-9 Withhold Under 10 CFR 2.390

Security-Related Information - Figure 1.2.3-10 Withhold Under 10 CFR 2.390

Security-Related Information - Figure 1.2.3-11 Withhold Under 10 CFR 2.390

Security-Related Information - Figure 1.2.3-12 Withhold Under 10 CFR 2.390

Security-Related Information - Figure 1.2.3-13 Withhold Under 10 CFR 2.390

Security-Related Information - Figure 1.2.3-14 Withhold Under 10 CFR 2.390

Security-Related Information - Figure 1.2.3-15 Withhold Under 10 CFR 2.390

Security-Related Information - Figure 1.2.3-16 Withhold Under 10 CFR 2.390

Security-Related Information - Figure 1.2.3-17 Withhold Under 10 CFR 2.390

Security-Related Information - Figure 1.2.3-18 Withhold Under 10 CFR 2.390

Security-Related Information - Figure 1.2.3-19 Withhold Under 10 CFR 2.390

1.3 COMPARISON TABLES

When originally submitted the following information was valid.

1.3.1 Comparisons With Similar Facility Designs

Table 1.3.1-1 presents a design comparison of the Sequoyah Nuclear Steam Supply System design with that of Donald C. Cook Units 1 and 2 and Trojan. Table 1.3.1-2 presents a detailed design comparison of the Sequoyah Nuclear Plant Secondary Cycle with that of Diablo Canyon, D. C. Cook and Zion.

1.3.2 Comparison of Final and Preliminary Designs

Table 1.3.2-1 lists the significant design changes that have been made since the submittal of the Preliminary Safety Analysis Report.

TABLE 1.3.1-1 (Sheet 1)

DESIGN COMPARISON (EXCLUDING SECONDARY CYCLE)

Sequoyah Nuclear Plant Units 1 and 2 - Comparison with Donald C. Cook Units 1 and 2 and Trojan

CHAPTER NUMBER	CHAPTER TITLE SYSTEM/COMPONENT	REFERENCES (FSAR)	SIGNIFICANT SIMILARITIES	SIGNIFICANT DIFFERENCES
3.0	Steel Containment System	Section 3.8.2	D. C. Cook Units 1 & 2	The use of freestanding steel primary containment vessel.
4.0	Reactor Fuel	Section 4.2.1	Trojan	None.
	Reactor Vessel Internals	Section 4.2.2	D. C. Cook Units 1 & 2, Trojan	D. C. Cook Units 1 and 2 and Sequoyah Units 1 and 2 have thermal shields. Trojans has neutron pads. Sequoyah upper internals have been modified to incorporate UHI.
	Reactivity Control System	Section 4.2.3	D. C. Cook Units 1 & 2, Trojan	None.
	Nuclear Design	Section 4.3	D. C. Cook Units 1 & 2, Trojan	None.
	Thermal-Hydraulic Design	Section 4.4	D. C. Cook Units 1 & 2, Trojan	The total primary heat output and coolant temperatures are higher for Sequoyah and Trojan than for the D. C. Cook Plant.

TABLE 1.3.1-1 (Sheet 2)

DESIGN COMPARISON (EXCLUDING SECONDARY CYCLE)

Sequoyah Nuclear Plant Units 1 and 2 - Comparison with Donald C. Cook Units 1 and 2 and Trojan

CHAPTER NUMBER	CHAPTER TITLE SYSTEM/COMPONENT	REFERENCES (FSAR)	SIGNIFICANT SIMILARITIES	SIGNIFICANT DIFFERENCES
5.0	Reactor Coolant System and Connected Systems, Integrity of the Reactor Coolant System Boundary	Sections 5.1, 5.2	D. C. Cook Units 1 & 2, Trojan	The following have been added or changed: - New requirements for fracture toughness testing, - New means of determining heat-up and cool-down rates.
	Reactor Vessel and Appurtenances*	Section 5.4	D. C. Cook Units 1 & 2, Trojan	None.
	Reactor Coolant Pumps*	Section 5.5.1	D. C. Cook Units 1 & 2, Trojan	None.
	Steam Generators*	Section 5.5.2	D. C. Cook Units 1 & 2, Trojan	None.
	Reactor Coolant Piping*	Section 5.5.3	D. C. Cook Units 1 & 2, Trojan	None.
	Residual Heat Removal System	Section 5.5.7	D. C. Cook Units 1 & 2, Trojan	None.
	Pressurizer*	Section 5.5.10	D. C. Cook Units 1 & 2, Trojan	None.

*All components designed and manufactured to Code edition in effect at date of purchase order.

TABLE 1.3.1-1 (Sheet 3)

DESIGN COMPARISON (EXCLUDING SECONDARY CYCLE)

Sequoyah Nuclear Plant Units 1 and 2 - Comparison with Donald C. Cook Units 1 and 2 and Trojan

CHAPTER NUMBER	CHAPTER TITLE SYSTEM/COMPONENT	REFERENCES (FSAR)	SIGNIFICANT SIMILARITIES	SIGNIFICANT DIFFERENCES
6.0	Engineered Safety Features			
	Emergency Core Cooling System	Section 6.3	D. C. Cook Units 1 & 2, Trojan	None
	Ice Condenser System	Section 6.5	D. C. Cook Units 1 & 2	Trojan does not use an ice condenser.
7.0	Instrumentation & Controls			
	Reactor Trip System	Section 7.2	System functions are similar to D. C. Cook Units 1 and 2, Trojan	None
	Engineered Safety Features Actuation System	Section 7.3	Systems functions are similar to D. C. Cook Units 1 and 2, Trojan	None.
	Systems Required for Safe Shutdown	Section 7.4	System functions are similar to D. C. Cook Units 1 and 2, Trojan	None.
	Safety-Related Display Instrumen-tation	Section 7.5	Parametric display is similar to that of D. C. Cook Units 1 & 2, Trojan	Actual physical configuration may differ due to customer design philosophy.

TABLE 1.3.1-1 (Sheet 4)

DESIGN COMPARISON (EXCLUDING SECONDARY CYCLE)

Sequoyah Nuclear Plant Units 1 and 2 - Comparison with Donald C. Cook Units 1 and 2 and Trojan

CHAPTER NUMBER	CHAPTER TITLE SYSTEM/COMPONENT	REFERENCES (FSAR)	SIGNIFICANT SIMILARITIES	SIGNIFICANT DIFFERENCES
	All Other Systems Required for Safety	Section 7.6	Operational functions are similar to D. C. Cook Units 1 & 2, Trojan	None.
	Control Systems not required for Safety	Section 7.7	Operational functions are similar to D. C. Cook Units 1 & 2, Trojan	The Sequoyah Nuclear Plant has approximately 50-percent load rejection capability while that of the D. C. Cook Plant is 100 percent. The rod position indication for the Sequoyah Nuclear Plant and the D. C. Cook Plant is an analog system; Trojan's RPI is a digital system.
9.0	Auxiliary Systems			
	Chemical and Volume Control System	Section 9.3.4	D. C. Cook Units 1 & 2, Trojan	The Sequoyah Nuclear Plant does not have deboration demineralizers.

TABLE 1.3.1-1 (Sheet 5)

DESIGN COMPARISON (EXCLUDING SECONDARY CYCLE)

Sequoyah Nuclear Plant Units 1 and 2 - Comparison with Donald C. Cook Units 1 and 2 and Trojan

CHAPTER NUMBER	CHAPTER TITLE SYSTEM/COMPONENT	REFERENCES (FSAR)	SIGNIFICANT SIMILARITIES	SIGNIFICANT DIFFERENCES
11.0	Radioactive Waste Management			
	Source Terms	Section 11.1	D. C. Cook Units 1 & 2, Trojan	Differences are based upon plant operational influences.
	Liquid Waste Systems	Section 11.2	Performance characteristics similar to D. C. Cook Units 1 & 2, Trojan	The Sequoyah Nuclear Plant has a dissimilar segregated liquid drain system.
	Gaseous Waste Systems	Section 11.3	D. C. Cook Units 1 and 2, Trojan	None.
	Process and Effluent Radiological Monitoring Systems	Section 11.4	Functionally similar to D. C. Cook Units 1 and 2, Trojan	None.
15.0	Accident Analysis	Chapter 15	Similar to D. C. Cook Units 1 and 2, Trojan	The Accident Analysis sections have been updated. New sections have been added, e.g., single RCA withdrawal, accidental despressurization of the RCS, computer code descriptions, etc.

TABLE 1.3.1-2 (Sheet 1)

DESIGN COMPARISON - SECONDARY CYCLE

Feature	Referenced FSAR Section	Sequoyah Nuclear Plant	Diablo Canyon	D. C. Cook	Zion
Turbine Generator					
Net Generator Output (kW)	10.1, 10.2	1,183,192	*1,026,000; **1,122,000	1,100,000	1,050,000
Turbine Cycle Heat Rate (Btu/kW-Hr)	10.1	9,871	*10,075; 10,033	*10,208; **10,232	***
Type/LSB Length	10.2	TC6F/44	TC6F/44	*TC6F/43; **TC6F/52	TC6F/44
Cylinders (No.)	10.2	1 H.P.-3 L.P.	1 H.P.-3 L.P.	1 H.P.-3 L.P.	1 H.P.-3 L.P.
Steam Conditions at Throttle Valve					
Flow (lb/hr)	10.2	14,420,210	*13,934,600; **14,239,300	14,120,000	13,989,300
Pressure (psia)	10.2	861.9	725	728	690
Temperature (°F)	10.2	526.9	507	507.5	501.5
Moisture Content (%)	10.1, 10.2	0.21	*.65; **.53	NA	.25
Turbine Cycle Arrangement					
Steam Reheat Stages (No.)	10.1	2	2	1	1
Feedwater Heating Stages (No.)	10.1, 10.4.7, 10.4.9	7	6	6	6

TABLE 1.3.1-2 (Sheet 2)

DESIGN COMPARISON - SECONDARY CYCLE

Feature	Referenced FSAR Section	Sequoyah Nuclear Plant	Diablo Canyon	D. C. Cook	Zion
Strings of Feedwater Heaters (No.)	10.1, 10.4.7, 10.4.9	3	3	3 Lowest Pressure; 2 All Others	3
Heaters in Condenser Neck (No.)	10.4.1	3		0	1
Heater Drain System (Type)	10.4.9	All Drains Pumped Forward	High Pressure Pumped Forward; Low Pressure Cascaded	High Pressure Pumped Forward: Low Pressure Cascaded	High Pressure Pumped Forward: Low Pressure Cascaded
Hotwell Pumps (No.)	10.1, 10.4.7	3	3	3	4
Condensate Booster Pumps (No.)	10.1, 10.4.7	3	3	3	4
Heater Drain Pumps (No.)	10.1, 10.4.9	3 H.P.-2 L.P.	3	3	3
Main Feed Pumps (No. and Type)	10.1, 10.4.7	2 - Turbine Driven	2 - Turbine Driven	2 - Turbine Driven	2 - Turbine Driven
Main Steam Bypass Capacity (%)	10.4.4	40%	40%	85%	40%
Final Feedwater Temperature	10.1	435.7	*432.1; **432.9	*434.8; **430.5	NA

TABLE 1.3.1-2 (Sheet 3)

DESIGN COMPARISON - SECONDARY CYCLE

Feature	Referenced FSAR Section	Sequoyah Nuclear Plant	Diablo Canyon	D. C. Cook	Zion
Condenser					
Type	10.1, 10.4.1	Single Pressure	Single Pressure	Single Pressure	Single Pressure
Number of Shells	10.1, 10.4.1	3	2	3	3
Design Back Pressure (In. Hg Abs)	10.1, 10.4.1	2	1.5	*1.71; **1.41	1.5
Total Condenser Duty (Btu/Hr)	10.1, 10.4.1	7.829×10^9	7.6×10^9 (Approx)	2.5×10^9 (Approx)	7.18×10^9 (Approx)

*Unit 1
**Unit 2
***Commonwealth Edison will not release these heat rates.

TABLE 1.3.2-1 (Sheet 1)

MAJOR DESIGN CHANGES SINCE SUBMITTAL OF THE PSAR

System	Reference Section	Changes
Containment	3.8.2	The steel containment was modified as a result of analyses to include stiffeners in both the vertical and horizonal directions.
Fuel	4.2.1	The reactors will be fueled with 17 x 17 fuel assemblies in lieu of 15 x 15 fuel assemblies.
Reactor Internals	4.2.2	The reactor internals have been modified to accept 17 x 17 fuel assemblies.
Reactor	5.0 5.5.15	The Unit 1 and Unit 2 Steam Generators have been replaced. A Reactor Vessel Head Vent System has been provided.
Containment Ice Condenser	6.2	Design of the following has been modified: (1) Ice Baskets (2) Lower inlet door and hinges (3) Lower support structure (4) Lattice Frames (5) Lattice frame support columns (6) Wall panels (7) Intermediate deck doors (8) Top deck doors (9) Air handling unit supports (10) Top deck beams (11) Ice Condenser crane, crane rail, and supports (12) Stud material and diameter in containment, end walls, and crane wall (13) Number of air handling units (14) Number of refrigeration packages and associated hardware The following have been deleted: (1) Floor air-cooling duct (2) Access platform to lower inlet doors

TABLE 1.3.2-1 (Sheet 2)

MAJOR DESIGN CHANGES SINCE SUBMITTAL OF THE PSAR

System	Reference Section	Changes
Containment (Cont.)		The following have been added: (1) Ice basket tie-down (2) Lattice frame tangential-tie-member (3) Closer spacing of lattice frames (4) Lower inlet door arrester (5) Turning vanes on lower support structure and floor (6) Jet impingement plate (7) Foam concrete in floor (8) Glycol cooling of floor (9) Defrosting capability of wall panels and floor (10) Floor support columns (11) Wall panel cradle (12) Rounded entrance to lower doors
Containment		Carbon absorbers added to containment purge exhaust.
		The pressure vessels of the containment spray heat exchangers will conform to ASME Boiler and Pressure Vessel Code, Section VIII.
	6.2.5	Electric recombiners for post LOCA hydrogen control have been added.
	6.2.4	A Reactor Vessel Level Indicating System has been provided.
	6.2.6	A containment vacuum relief system has been added to limit pressure differential across the steel containment vessel.

TABLE 1.3.2-1 (Sheet 3)

MAJOR DESIGN CHANGES SINCE SUBMITTAL OF THE PSAR

System	Reference Section	Changes
Emergency core cooling System	6.3	Safety injection pumps will normally inject into the four cold legs of the reactor coolant system but provision for injection into the hot legs has been retained. An UHI Accumulator System was added and the Reactor head and internals modified. The UHI system was later deleted.
Cables	7.1.2, 8.3.1.2	Tray loading has been modified to 30 percent of the cross-section area for low-voltage power trays (except when a single layer of cables are used) and to 60 percent for control and instrument cables trays to reflect current design practices (unless evaluated as a design criteria exception).
Instrument & Controls	7.1	The process protection system has been replaced by a Westinghouse Eagle 21 System. The Main Control Room has undergone a Control Room Design Review and layout modifications.
Reactor trip system	7.2	Protection system logic design has been changed from relay to solid state.
Engineered safety features	7.3	Increased online testability has been provided for the Engineered Safety Features.
Onsite AC power	8.3.1	A fourth diesel generator has been added to the plant. The capacity of each diesel generator has been increased.
Onsite DC power	8.3.2	The two 250-volt battery systems have been replaced by four 125-volt battery systems shared between the two nuclear generating units to achieve greater diversity of the onsite dc power supplies. A fifth vital battery has been added as a spare.

TABLE 1.3.2-1 (Sheet 4)

MAJOR DESIGN CHANGES SINCE SUBMITTAL OF THE PSAR

System	Reference Section	Changes
Component cooling	9.2.1	During normal full power operation with maximum spent fuel pit cooling available, two CCS pumps and one heat exchanger pair may be required for the unit assigned the spent fuel pit load and one CCS pump and heat exchanger pair for the other unit. It was indicated in the PSAR that two pumps and one heat exchanger were capable of serving all operating components in both units, but that two pumps and heat exchangers would normally be operated. Two CCS pumps and one heat exchanger pair and not three CCS pumps and two heat exchanger pairs may be required to remove the residual and sensible heat load plus the aligned component loads for minimum cooldown rate. However, unit cooldown operations design allows assignment of a pump and heat exchanger pair to each train of the safeguards systems thereby increasing cooldown capability. Normal alignment of the CCS has been changed to assure two independent trains of cooling. Automatic actuation has been added to start any standby pumps on the normally operating headers to help assure a continuous supply of cooling water to all loads. The following equipment is no longer served by the CCS: (1) Reactor coolant pump bearing coolers (2) Reactor vessel supports (3) Safety injection pump oil coolers (4) Charging pump oil coolers

TABLE 1.3.2-1 (Sheet 5)

MAJOR DESIGN CHANGES SINCE SUBMITTAL OF THE PSAR

System	Reference Section	Changes
Component Cooling (cont)	9.2.1 (cont)	The following equipment is served by the CCS: (1) Reactor coolant pump thermal barriers and motor oil coolers (2) Residual heat removal pump seal water heat exchangers (3) Safety injection pump mechanical seal coolers (4) Charging pumps mechanical seal coolers (5) Waste gas compressors The water temperature detectors have been repositioned to the outlet of each heat exchanger pair or heat exchanger group and to the main return headers to the CCS pumps. Radiation monitors have been provided at each CCS heat exchanger pair outlet. Four booster pumps (two per unit) have been included to provide the additional head necessary to overcome the high head loss through the RCS thermal barriers. A seal collection station has been provided to collect seal leakage from the CCS pumps. The three shell and tube CCS HTXs have been replaced by six plate heat exchangers.

TABLE 1.3.2-1 (Sheet 6)

MAJOR DESIGN CHANGES SINCE SUBMITTAL OF THE PSAR

System	Reference Section	Changes
Spent fuel storage pool	9.1.2	The pool in the Auxiliary Building has been modified by the addition of a concrete wall separating the cask set down area from the fuel area to protect the spent fuel from an accidental drop of the cask. The storage capacity of the spent fuel pool has increased.
	9.1.3	The volume of the pool has been modified.
Essential raw	9.2.2	A new ERCW pump station has been provided. The AERCW system has been deleted.
		The auxiliary charging pumps and auxiliary letdown heat exchangers are no longer served by the ERCW system.
		The reactor coolant pump motor coolers and the control rod drive motor coolers are additional equipment served by the ERCW system.
		Sodium hypochlorite can be injected into the ERCW system in the pumping station ERCW pump compartment to control Asiatic clams.
Demineralized	9.2.3	A new makeup water treatment was provided and a Contractor supplied source of makeup water can be provided.
Auxiliary control air	9.3.1	Credit is now taken for auxiliary air system as a safety feature.

TABLE 1.3.2-1 (Sheet 7)

MAJOR DESIGN CHANGES SINCE SUBMITTAL OF THE PSAR

System	Reference Section	Changes
Heating, ventilation, and air conditioning	9.4.1	Two redundant emergency cleanup air supply fans have been provided to recirculate a portion of the main control room air through the HEPA-charcoal filter trains during control room isolation.
		A capability to isolate major sections of the Auxiliary Building during emergencies and keep it at a slight negative pressure is provided.
	9.4.7	An annulus vacuum control subsystem was included in the emergency gas treatment system to continuously maintain the Shield Building annulus space at a negative pressure during plant operation.
Fire Protection	9.5.1	$C0_2$ storage has been moved outside the Control Building.
Post Accident Sampling Facility	9.5.10	A post accident sampling facility has been provided.
Main steam supply	10.3	32” OD piping has been used instead of the 33” ID indicated in the PSAR.
Main condenser evacuation	10.4.2	An optional HEPA filter-charcoal adsorber system was provided to restrict radioactive effluents to a level as low as practicable.
Condenser circulating water	10.4.5	Cooling towers and a cooling tower supply pumping station have been provided.

TABLE 1.3.2-1 (Sheet 8)

MAJOR DESIGN CHANGES SINCE SUBMITTAL OF THE PSAR

System	Reference Section	Changes
Condensate-feedwater	10.4.7	Bypass feedwater regulator valves have been included to provide additional feedwater stability during startup conditions. A motor-operated feedwater isolation valve in the piping to each steam generator was included to provide redundant valve closure in feedwater isolation signal. This system has been modified to provide the capability of restoring 85 percent of the feedwater flow to the steam generators within 20 seconds after the loss of a main feed pump by: (1) Increasing rated speed of drive turbine, and (2) Starting all auxiliary feedwater pumps. The main feed pump turbine condenser cooling is performed by the condensate instead of the raw water as indicated in the PSAR. Secondary side heat exchanger components have undergone a copper reduction program.
Auxiliary Feedwater Systems	10.4.8	A steam driven turbine auxiliary feedwater pump system has been added to each unit. Redundant and independent isolation valves have been added to guard against a loss of auxiliary feedwater during a major accident.

TABLE 1.3.2-1 (Sheet 9)

MAJOR DESIGN CHANGES SINCE SUBMITTAL OF THE PSAR

System	Reference Section	Changes
Heater, drains, and vents	10.4.9	The Unit Main Turbine Generator will receive a signal to run the unit back to approximately 78% (Unit 2) and 76.6% (Unit 1) if: load (a) either No. 3 Heater Drain Tank bypass valve is open, (b) the main turbine generator is loaded to greater than 83%, (Unit 2) and 81.6% (Unit 1) and (c) after receiving a delayed indication of low flow from the discharge header of the No. 3 Heater Drain Tank Pumps. Additional logic has been provided to close level control valve at No. 3 heater drain pump discharge on loss of one drain pump to protect the remaining operating pumps when required.
Waste disposal	11.2	The drains have been segregated into tritiated and non-tritiated systems.
	11.3	Holdup time for the gaseous waste system has been increased to 60 days.
	11.2	Provisions have been made to supply nitrogen to the steam generators when they are drained to inert them. A mobile waste system is provided as needed to process radwaste.

1.4 IDENTIFICATION OF AGENTS AND CONTRACTORS

The Westinghouse Electric Corporation contracted the design and fabrication of NSSS components at the Sequoyah Nuclear Plant including the two reactors. In addition, they supplied the initial fuel loading. TVA has also contracted with Framatome for replacement core fuel starting with the Cycle 9 reloads for both units. TVA contracted with Westinghouse Electric Company, Combustion Engineering Nuclear Power LLC for the design and fabrication of replacement steam generators (RSG) on Unit 1and Unit 2. Removal and installation construction work associated with the Unit 1 RSG's was performed by Bechtel. Removal and installation construction work associated with the Unit 2 RSG's was performed by SGT LLC. TVA's Nuclear Engineering Group (formerly the Division of Engineering Design (EN DES) in the Office of Engineering Design and Construction) had the responsibility for the design of the remainder of the plant plus additional design changes as they became necessary. TVA's Nuclear Construction Group (formerly the Division of Construction in the Office of Engineering Design and Construction) had the responsibility for construction of the plant. TVA Nuclear has the responsibility for operating the plant.

TVA utilizes consultants, as necessary, to perform selected design work and to obtain specialized services. Weston Geophysical Engineering, Inc., was contracted to assist in soil foundation dynamic analyses. Engineering Data Systems, Inc., of San Francisco, assisted in seismic analysis of piping. Chicago Bridge and Iron Company, Chicago, Illinois, was contracted to design and construct the free standing steel containments for both units. Certification of material used for containment flexible seals to withstand extreme radiation and temperature conditions was done by the Presray Corporation, Pawling, New York.

1.5 REQUIREMENTS FOR FURTHER TECHNICAL INFORMATION

The design of the Sequoyah Nuclear Plant is based upon proven concepts which have been developed and successfully applied to the design of pressurized water reactor systems.

The term "research and development" as used in this section is the same as that used by the Commission in Section 50.2 of 10 CFR Part 50 as follows:

(n) "Research and development" means (1) theoretical analysis, exploration or experimentation; or (2) the extension of investigative findings and theories of a scientific nature into practical application for experimental and demonstration purposes including the experimental production and testing of models, devices, equipment, materials and processes."

The research and development discussed in the FSAR is to confirm the engineering and design values normally used to complete equipment and system designs. It does not involve the creation of new concepts or ideas.

The technical information generated by these research and development programs are used either to demonstrate the safety of the design and more sharply define margins of conservatism, or to lead to design improvements.

Each research and development program is briefly summarized for identification and its relationship to the Sequoyah Nuclear Plant is discussed. Detailed discussions of each program are available in a more expanded summary form in the references incorporated throughout this section.

Information regarding the Mark-BW fuel assembly is provided in the referenced Topical Reports in Section 1.6 and the text in Chapter 4.5.

1.5.1 Programs Required for Plant Operation

In the PSAR, the following programs were identified as required for plant design and operation:

1. Core Stability Evaluation (Item 1 in Reference 1)

The purpose of this program was to establish means for the detection and control of potential xenon oscillations and for the shaping of the axial power distribution for improved core performance. The research and development portions of this program have been completed, as discussed below.

The development program for power distribution control is divided into four general areas, namely:

a. Confirmation of the capability of the out-of-core detector system to indicate axial and diametrical gross core power distributions sufficiently to permit control of xenon oscillations within specified operating limits.

b. Development of a control system utilizing the out-of-core detector system for axial power shaping (such a system is used in the Robert Emmett Ginna, Indian Point Unit 2, and all subsequent Westinghouse reactors).

c. Verification, during startup tests of other Westinghouse reactors, that the control system specified in Item b can control the core power distribution.

d. Verification that adequate margin exist to operate the Sequoyah Nuclear Plant at the licensed power rating by measurements taken during prior operation of other Westinghouse reactors.

Items a and b of this program have been completed satisfactorily. Items c and d were evaluated on Westinghouse reactors going into operation prior to the Sequoyah Nuclear Plant. These include Donald C. Cook Units 1 and 2 (Docket Nos. 50-315 and 50-316), Zion Units No. 1 and 2 (Docket Nos. 50-295 and 50-304) and Trojan (Docket No. 50-344).

Safe operation at the design power level experimentally demonstrated, at the time of Sequoyah's initial startup, that the actual power shapes at full power are no worse than those used in the calculation of core integrity. The analytical model used to predict these power shapes has been justified by these and earlier measurements.

2. Fuel Rod Burst Program (Item 2 in Reference 1)

The original rod burst program, a study of the performance of Zircaloy cladding under simulated loss-of-coolant accident (LOCA) conditions, has been completed. It has supplied empirical data from which the effect of geometry distortion on the ability of the emergency core cooling system (ECCS) to meet the LOCA design criteria has been determined using present analytical design techniques.

The program included burst and quench tests on single rods and burst tests on rod bundles. As a result of single rod tests, specific design limits have been established on peak clad temperature and allowable maximum metal-water reaction to assure effective core cooling. The multi-rod burst tests demonstrated that even when rod-to-rod contact does occur after burst, the remaining flow area is always sufficient to ensure adequate core cooling.

The single rod burst test program for the 17 x 17 fuel pin array is discussed in Section 1.5.5.3.

3. Ice Condenser Containment Program (Item 4 in Reference 1)

In order to confirm the functional adequacy and the structural integrity of the designed ice condenser components, an extensive test program was performed. This program confirmed the prototype design, and was validated by additional confirmatory tests on selected production components.

A summary of the completed test program is presented below, the results of which are reported in the indicated References.

Title	Reference
ICE BASKET TESTS	
Static Load Test of Ice Basket	2, 8, 10
Failure Load Test of Ice Basket	2
Dynamic Load Test of Ice Basket	2
Ice Fallout from Seismic Loading	9
Stress Analysis Report	8
WALL PANEL TESTS	
Wall Panel Leak Test	2
Wall Panel Radial Load Test	2
Wall Panel Shear Test	2
LATTICE FRAME TESTS	
Lattice Frame Load-Deflection Test	2
LOWER INLET DOOR TESTS	
Lower Inlet Door Dynamic Load Test	3
Lower Inlet Door Heat Transfer and Leak Rate Test	4
Lower Inlet Door Shock Absorber Dynamic Tests	5, 6
TOP DECK DOOR TESTS	
Dynamic Load Tests	4, 6
INTERMEDIATE DOOR TESTS	
Intermediate Door Dynamic Test	5
PERFORMANCE TESTS	
Full Scale Section Test	7, 11, 12, 14
ICE TECHNOLOGY	
Iodine Removal Effectiveness	13

1.5.2 Programs Not Required for Plant Operation

Other areas of research and development, as outlined below, are those which give added confirmation that the designs are conservative.

1.5.2.1 Burnable Poison Program (Item 7 in Reference 1)

Burnable poison rod program is complete. The burnable poison rods are borosilicate glass encased in stainless steel tubes. The fixed rods are used in the first core to reduce the concentration of boric acid poison in the moderator, thereby ensuring that the moderator coefficient of reactivity is always negative at operating temperature.

1.5.2.2 Fuel Development Program for Operation at High Power Densities (Item 8 in Reference 1)

To demonstrate satisfactory operation of fuel at high burnup and power densities, and to define design margins, a program was designed to test fuel in both the Saxton and Zorita reactors. The Saxton loose-lattice irradiation program was designed to demonstrate fuel performance at conditions significantly in excess of PWR design limits, and would establish power burnup limits for the fuel. The Zorita reactor is the first PWR with a Zircaloy core to operate at similar core conditions as the current design units. Because of the timely manner in which fuel can be irradiated in Zorita, four fuel assemblies are being tested there to demonstrate satisfactory operation of the fuel in a commercial PWR environment.

Sustained successful operation of special Zorita fuel rods at peak design power levels, in excess of those planned for the Sequoyah Nuclear Plant, will increase assurance that the fuel has adequate performance margins to accommodate transient overpower operation.

The Saxton Loose Lattice Irradiation and Saxton Parametric Irradiation subprograms have been completed. It is concluded that the loose lattice program has satisfactorily completed the test objective. The work of the loose lattice assemblies was partly performed under USAEC Contract AT (11-1)-3044 and has been reported on a quarterly basis (Reference 15); a fuel materials performance report has been published (Reference 16).

1.5.2.3 FLECHT (Full Length Emergency Core Cooling Heat Transfer Test)
(Item 12 in Reference 1)

The objective of the FLECHT program was to obtain experimental reflooding heat transfer data under simulated loss-of-coolant accident conditions for use in evaluating the heat transfer capabilities of pressurized water reactor emergency core cooling systems. The test results verified the ability of a bottom flooding ECCS design to terminate the temperature increase during a LOCA. The LOCA evaluation presented in this application utilizes the results of the FLECHT Program for the analysis of the reflooding phase of the accident.

1.5.2.4 Loss of Coolant Analysis Program (Item 14 in Reference 1)

This program has been completed with the results of the Flashing Heat Transfer Program (Item 13 in Reference 1) being incorporated in the core thermal design codes used in the LOCA analysis presented in this application.

The loss of coolant analysis program was established to integrate, as appropriate, the more realistic heat transfer models obtained from experimental and analytical development programs into the core thermal design codes used to evaluate the loss-of-coolant accident.

1.5.2.5 Reactor Vessel Thermal Shock (Item 16 in Reference 1)

The effects of safety injection water on the integrity of the reactor vessel following a postulated loss-of-coolant accident, has been analyzed using data on fracture toughness of heavy section steel both at beginning of plant life and after irradiation corresponding to approximately 40 years of equivalent plant life. The results show that under the postulated accident conditions, the integrity of the reactor vessel is maintained.

Fracture toughness data are obtained from a Westinghouse experimental program which is associated with the Heavy Section Steel Technology (HSST) Program at ORNL and from Euratom programs. Since results of the analyses are dependent on the fracture toughness of irradiated steel, efforts are continuing to obtain additional confirmatory data. Data on two-inch thick specimens became available in 1970 from the HSST Program. Their data indicated a strong temperature dependence with a rapid increase in toughness at approximately NDT. For results obtained in the HSST Program, the HSST Semiannual Progress Report, issued by the Oak Ridge National Laboratory (quarterly, beginning in 1974), should be consulted.

1.5.2.6 Blowdown Forces Program (Item 15 in Reference 1)

The objective of the Blowdown Forces Program was to develop a digital computer program for the calculation of pressure, velocity, and force transients in the Reactor Coolant System during a loss-of-coolant accident, and to utilize this code in the calculation of blowdown forces on the fuel assemblies and reactor internals to ensure that the stress and deflection criteria used in the design of these components are met.

Westinghouse has completed the development of BLODWN-2, an improved digital computer program for the calculation of local fluid pressure, flow and density transients in the Primary Coolant System during a loss of coolant accident.

Extensive comparisons have been made between BLODWN-2 and test data. Agreement between code predictions and data has been good.

Analyses using the BLODWN-2 Program to evaluate the effects of Blowdown Forces are presented in Section 3.9 of the Sequoyah FSAR. It was concluded from the analysis that the design of this reactor meets the established design criteria. The validity of the BLODWN-2 Code has been demonstrated, therefore the program is considered to be complete.

1.5.3 17 x 17 Fuel Assembly Verification Tests (Item 23 in Reference 1)

A comprehensive test program for the 17 x 17 assembly has been successfully completed by Westinghouse. Reference 1 contains a summary discussion of the program.

Some of the verification work described herein was conducted using 17 x 17 assemblies of seven grid design whereas the selected 17 x 17 assembly design has eight grids. Tabulated below are those 17 x 17 tests which utilized a seven grid geometry and the effect of adding an eighth grid.

Test	Parameter	Effect
Fuel Assembly Structural Test	Axial Stiffness	Negligible effect at blowdown Structural Test impact forces (Reference 17)
	Lateral Impact	Additional grid shares impact load (Reference 17)

Test	Parameter	Effect
Prototype Assembly Test	Pressure Drop	The margin between 7 grid design ΔP and D loop results (Reference 18) is adequate to cover the additional ΔP resulting from the additional grid (< 5% increase in ΔP).
	Lift Force	The margin between 7 grid design lift force and D loop results (Reference 18) is adequate to cover the additional lift force resulting from the additional grid.
	Rod Vibration	Decreased span length results in improved vibration characteristics and reduced rod wear.
Departure from Nucleate Boiling	DNB Correlation	Addition of a grid increases mixing which increases DNB margin
Incore Flow Mixing	TDC	TDC increases as grid spacing decreases (Reference 19)

The above tabulation shows that (1) additional design changes are not required (e.g. no new fuel assembly holddown spring) due to the addition of a grid and (2) seven grid test information can be used to assess the adequacy of the eight grid design. Additional testing to specifically investigate the eight grid assembly is not required.

1.5.3.1 Rod Cluster Control Spider Tests

The 17 x 17 rod cluster control (RCC) spider is conceptually similar to, but geometrically different from the 15 x 15 spider. The 17 x 17 spider supports 24 rodlets (the 15 x 15 design supports 20) with no vane supporting more than two rodlets (same as the 15 x 15 design). The RCC spider tests verified the structural adequacy of the design.

The RCC Spider tests have been completed. A vertical static load test approximately seven times the design dynamic load did not result in spider vane to hub joint failure. A spider was tested to 2.8 x 106 steps without failure. The spider loading was 110% of the design value for 1.8 x 106 cycles and 220% of the design loading for 1 x 106 cycles. Design load is 3600 pounds compression and 1800 pounds tension. The spring test resulted in negligible preload loss.

1.5.3.2 Grid Tests

The 17 x 17 grid is conceptually similar but geometrically different from the 15 x 15 "R" grid. The purpose of the grid tests is to verify the structural adequacy of the grid design.

The grid tests have been completed. Test results are in agreement with pretest design values. The test results, along with fuel assembly structural test results, were factored into the seismic analysis (Reference 17).

1.5.3.3 Fuel Assembly Structural Tests

The 17 x 17 fuel assembly tests were performed to determine mechanical strength and properties. The fuel assembly parameters obtained were as follows: lateral and axial stiffness, impact and internal structural damping coefficients, vibrational characteristics and the lateral and axial impact response for postulated accident loads. The parameters obtained from the lateral dynamic tests are used for seismic analysis, while those obtained from the axial tests are incorporated in the loss-of-coolant (blowdown) accident analysis.

There is a general axial test buckling criterion which does not allow local buckling of components which could preclude control rod insertion during an accident. The fuel assembly overall buckling and component local buckling is checked during the axial static and dynamic tests. The lateral displacement associated with the fuel assembly overall (beam type) buckling is constrained by the reactor internals and therefore does not reduce the fuel assembly ultimate strength. Local component buckling was not experienced during either the static or dynamic tests for loads well in excess of the design values. The general acceptance was not violated. These tests were completed at the Westinghouse Engineering Mechanics Laboratory. A general description of the test procedure, including a description of use of the parameters as related to seismic and blowdown is presented in Reference 17.

1.5.3.4 Guide Tube Tests

To verify the structural adequacy of the guide tubes, an extensive series of tests were conducted to determine guide tube deflection with simulated blowdown forces comparable to those expected during a loss-of-coolant accident and to determine the maximum acceptable deflection which assures insertion of a control rod by free fall. Additional tests were conducted to determine fatigue strength, displacement as a function of strain and the natural frequencies of the guide tubes for use in dynamic analyses. Refer to References 19 and 20 for a discussion of these tests.

1.5.3.5 Prototype Assembly Tests

The purpose of these tests was to demonstrate that the 17 x 17 fuel assembly and control rod hardware designs will perform as predicted. Two prototype assemblies were sequentially tested in order to obtain the required experimental data. A single set of control rod hardware, including driveline, was used in the tests. The fuel assemblies were subjected to flow and system conditions covering those most likely to occur in a plant during normal operation as well as during a pump overspeed transient. Seismic testing is not included in the test sequence.

These tests were used to verify the integrated fuel assembly and RCC performance in several areas. Data obtained included pressures and pressure drops throughout the system, hydraulic loadings on the fuel assembly and drive line, control rod drop time and stall velocity, fuel rod vibration and control rod, drive line, guide tube, and guide thimble wear during a lifetime of operation.

The D-Loop testing has been completed. The results of the testing are given in Reference 18.

1.5.3.6 Departure from Nucleate Boiling (DNB)

The effect of the 17 x 17 fuel assembly geometry on the DNB heat flux has been determined experimentally and has been incorporated in a modified spacer factor for use with the W-3 correlation. The effect of cold-wall thimble cells in the 17 x 17 geometry has also been quantified.

A similar program was conducted to quantify the DNB performance of the R-type mixing vane grid as developed for the 15 x 15 fuel assembly design (References 21 and 22). The results of that program were used to develop a modified spacer factor which quantifies the power capability associated with the use of the R mixing vane grid as well as the change in power capability due to the axial spacing of the grids. The modified spacer factor, along with the W-3 correlation with the cold-wall factor, was shown to be applicable to cold-wall thimble cells in the 15 x 15 geometry (Reference 22).

The program has been completed and the results are reported in Reference 23.

1.5.3.7 Incore Flow Mixing

In the thermal-hydraulic design of a reactor core, the effect of mixing or turbulent energy transfer within the hot assembly is evaluated using the THINC code. The rate of turbulent energy transfer is formulated in the THINC analysis in terms of a thermal diffusion coefficient (TDC).

A program (Reference 19) to determine the proper value of TDC for the R grid vane, as used in the 15 x 15 fuel assembly design, has been completed and showed that a design value of 0.038 (for 26 inch spacing) can be used for TDC. These results also showed that TDC was independent of Reynold's number, mass velocity, pressure, and quality over the ranges tested.

A similar TDC experimental program employed a geometry typical of the 17 x 17 fuel assembly to determine the effects of the geometry on mixing and to determine an appropriate value for TDC. A uniform axial heat flux was used. There is no analytical reason to expect that the mixing coefficient would be affected by a non-uniform axial heat flux. The THINC computer code considers the mixing in each increment along the heated length and within that increment the heat flux is considered uniform. The tests reported by Cadek (Reference 24) indicate that there was no difference, within experimental accuracy, between a test section with a uniform flux (Pitt) and one half of a cosine flux (Columbia). The heat flux will vary between the simulated fuel rods in the test section to create a thermal gradient in the radial direction. Using different flow rates and inlet temperatures, the TDC for the 17 x 17 geometry will be determined.

The TDC tests are completed and the results are reported in Reference 25.

1.5.4 Inpile Fuel Densification (Item 22 in Reference 1)

Operating experience with uranium dioxide fuel has indicated that the fuel may densify under irradiation, to a greater density than that to which it was manufactured. This densification can lead to shorter active fuel length stacks, increased initial rod-to-clad radial gaps, and pellet-to-

pellet axial gaps. The shorter fuel stack length gives rise to a small increase in overall, average linear power density (kW/ft). Increased radial gap dimensions result in reduced gap conductance and lead to higher pellet temperatures. Axial gaps give rise to local power peaking due to decreased neutron absorption.

Westinghouse fuel densification research was directed toward producing fuel with a structure which minimizes inpile densification (hereafter called stable fuel). The objective of the program was to define material characteristics and manufacturing processes which lead to stable fuel. Stable fuel is defined as fuel whose densification is small. Residual effects of densification were evaluated on a model developed by this program. A more detailed description of the program and results is presented in Reference 26.

1.5.5 LOCA Heat Transfer Tests (17 x 17)

Extensive experimental programs have been completed to determine the thermal hydraulic characteristics of 15 x 15 fuel assemblies, and to obtain experimental heat transfer data under simulated loss-of-coolant accident conditions.

Complementary experimental programs were completed with a simulated 17 x 17 assembly to determine its behavior under similar loss-of-coolant accident (LOCA) conditions.

Results from the 17 x 17 programs were compared with data from the 15 x 15 assembly test programs and were used to confirm predictions made by correlations and codes based on the 15 x 15 test results. Refer to Reference 27 for a more detailed discussion of these results.

1.5.5.1 Blowdown Heat Transfer Testing (Formerly Titled Delayed Departure From Nucleate Boiling)

The NRC Acceptance Criteria for Emergency Core Cooling Systems for Light-Water Power Reactor was issued in Section 50.4. of 10 CFR 50 on December 28, 1973. It defines the basis and conservative assumptions to be used in the evaluation of the performance of Emergency Core Cooling Systems (ECCS). Westinghouse believes that some of the conservatism of the criteria is associated with the manner in which transient DNB phenomena are treated in the evaluation models. Transient critical heat flux data presented at the 1972 specialists meeting of the Committee on Reactor Safety Technology (CREST) indicated that the time to DNB can be delayed under transient conditions. To demonstrate the conservatism of the ECCS evaluation models, Westinghouse initiated a program to experimentally simulate the blowdown phase of a LOCA. This testing is part of the Electric Power Research Institute (EPRI) sponsored Blowdown Heat Transfer Program, which was started early in 1976. Testing was completed in 1979. A DNB correlation will be developed by Westinghouse from these test results for use in the ECCS analyses.

Objective

The objective of the Blowdown Heat Transfer Test was to determine the time that DNB occurs under LOCA conditions. This information will be used to confirm the existing, or develop a new Westinghouse transient DNB correlation. The steady state DNB data obtained from 15 x 15 and 17 x 17 test programs can be used to assure that the geometrical differences between the two fuel arrays can be correctly treated in the transient correlations.

Program

The program was divided into two phases. The Phase I tests started from steady state conditions, with sufficient power to maintain nucleate boiling throughout the bundle, controlled ramps of decreasing test section pressure or flow initiated DNB. By applying a series of controlled conditions, investigation of the DNB was studied over a range of qualities and flows, and at pressures relevant to a PWR blowdown.

Phase I provided separate-effects data for heat transfer correlation development.

Typical parameters used for Phase I testing are shown below.

Parameters	Nominal Value
Initial Steady State Conditions	
Pressure	1250 to 2250 psia
Test section mass velocity	1.12 to 2.5 x 10^6 lb/hr-ft^2
Core inlet temperature	550 to 600°F
Maximum heat flux	306,000 to 531,000 Btu/hr-ft^2
Transient Ramp Conditions	
Pressure decrease depressurization from 2250 psia	0 to 350 psi/sec and subcooled
Flow decrease	0 to 100 percent/sec
Inlet enthalpy	Constant

Phase II simulates PWR behavior during a LOCA to permit definition of the time delay associated with onset of DNB. Tests in this phase covered the large double-ended guillotine cold leg break. All tests in Phase II were also started after establishment of typical steady state operating conditions. The fluid transient was then initiated, and the rod power decay was programmed in such a manner as to simulate the actual heat input of fuel rods. The test was terminated when the heater rod temperatures reach a predetermined limit.

Typical parameters used for Phase II testing are shown below.

Parameter	Nominal Value
Initial Steady State Conditions	
Pressure	2250 psia
Test section mass velocity	2.5×10^6 lb/hr-ft^2
Inlet coolant temperature	545°F
Maximum heat flux	531,000 Btu/hr-ft^2
Transient Conditions	
Simulated break	Double-ended cold leg guillotine breaks

Test Description

The experimental program was conducted in the J-Loop at the Westinghouse Forest Hills Facility with a full length 5 x 5 rod bundle simulating a section of a 15 x 15 assembly to determine DNB occurrence under LOCA conditions.

The heater rod bundles used in this program were internally-heated rods, capable of a maximum power of 18.8 kW/ft, with a total power of 135 kW (for extended periods) over the 12-foot heated length of the rod. Heat was generated internally by means of a varying cross-sectional resistor which approximates a chopped cosine power distribution. Each rod was adequately instrumented with a total of 12 clad thermocouples.

1.5.5.2 Results

The experiments in the DDNB Facility resulted in cladding temperature and fluid properties measured as a function of time throughout the blowdown range from 0 to 20 seconds.

Facility modifications and installation of the initial test bundle were completed. A series of shakedown tests in the J-Loop were performed. These tests provided data for instrumentation calibration and check-out, and provided information regarding facility control and performance. Initial program tests were performed during the first half of 1975. Under the sponsorship of EPRI, testing was reinitiated during 1976 on the same test bundle. The testing was terminated in November and plans were made for a new test bundle and further testing during 1978-1979. These tests were completed in December of 1979. A DNB correlation will be developed from these test results for use in Westinghouse ECCS analyses.

1.5.5.3 Single Rod Burst Test (SRBT)

The single rod burst test results were used to quantify the maximum assembly flow blockage which is assumed in LOCA analyses.

The single rod burst test program for the 17 x 17 fuel assembly rods consisted of testing specimens, at the two internal pressures and the three heating rates listed below in a steam atmosphere.

Heating Rate (725°F to 1940°F)	Internal Pressure psi
5°F/sec	1200, 1800
25°F/sec	1200, 1800
100°F/sec	1200, 1800

All specimens were then heated 5°F/sec from 1940°F to about 2300°F, held for a short time and then cooled 5°F/sec to 1200°F.

Metallography was done on specimens to determine the degree of wall thinning and the extent of oxygen embrittlement.

In addition, tests were run on 15 x 15 fuel assembly rods to insure reproducibility of the 1972 single rod burst test results.

The single rod burst tests are complete. The tests showed that the LOCA behavior of 17 x 17 clad in comparison to that of 15 x 15 clad exhibited no significant differences in failure ductility. Because of the results and the geometric scaling, the flow blockage as determined by 15 x 15 MRBT simulation can be used for 17 x 17 fuel geometry.

1.5.6 References

1. "Topical Report - Safety Related Research and Development for Westinghouse Pressurized Water Reactors - Program Summaries - Winter 1977 - Summer 1978" WCAP-8768, Rev. 2.

2. "Test Plans and Results for the Ice Condenser System," WCAP-8110, April 16, 1973.

3. "Test Plans and Results for the Ice Condenser System," WCAP-8110, Supplement 1, April 30, 1973.

4. "Test Plans and Results for the Ice Condenser System," WCAP-8110, Supplement 2, June 19, 1973.

5. "Test Plans and Results for the Ice Condenser System," WCAP-8110, Supplement 3, July 18, 1973.

6. "Test Plans and Results for the Ice Condenser System," WCAP-8110, Supplement 4, October 1, 1973.

7. "Test Plans and Results for the Ice Condenser System," WCAP-8110, Supplement 7, May 1974.

8. "Test Plans and Results for the Ice Condenser System-Stress and Structural Analysis and Testing of Ice Baskets," WCAP-8110, Supplement 8, May 1974.

9. "Test Plans and Results for the Ice Condenser System-Ice Fallout from Seismic Testing of Fused Ice Baskets," WCAP-8110, Supplement 9, May 1974.

10. "Test Plans and Results for the Ice Condenser System-Static Testing of Production Ice Baskets," WCAP-8110, Supplement 10, September 1974.

11. "Test Plans and Results for the Ice Condenser System-Ice Condenser Full-Scale Section Test at the Walz Mill FAcility," WCAP-8110, Supplement 6, May 1974.

12. "R. Salvatori (Approved), "Ice Condenser Containment Pressure Transient Analysis Method," WCAP-8078, March, 1973.

13. D. D. Malinowsky, "Iodine Removal in the Ice Condenser System," WCAP-7426, March 1970.

14. Final Report Ice Condenser Full-Scale Section Tests at the Waltz Mill Facility WCAP-8282 Prop. including Addenda.

15. The WCAP-3385 Series (specifically, 3385-18, -20, and -22 through -37) Reports Data from the Saxton Reactor.

16. W. R. Smalley, "Evaluation of Saxton Core II Fuel Materials Performance," WCAP-3385-57, July 1974.

17. L. Gesinski, D. Chiang, and S. Nakazato, "Safety Analysis of the 17x17 Fuel Assembly for Combined Seismic and Loss-of-Coolant Accident," WCAP-8288, December 1973.

18. E. E. De Mario and S. Nakazato, "Hydraulic Flow Test of the 17x17 Fuel Assembly," WCAP-8279, February 1974.

19. F. F. Cadek, F. E. Motley, and D. P. Dominicis, "Effect of Axial Spacing on Interchannel Thermal Mixing with R Mixing Vane Grid," WCAP-7941-L, June 1972 (Westinghouse Proprietary); and WCAP-7959, October 1972.

20. Cooper, F. W., Jr., "17 x 17 Driveline Component Tests - Phase IB, II, III, D-Loop Drop and Deflection," WCAP-8446 (Proprietary) and WCAP-8449 (Non-Proprietary), December 1974.

21. F. E. Motley and F. F. Cadek, "DNB Results for New Mixing Vane Grid (R), "WCAP-7695-L, July 1972 (Westinghouse Proprietary) and WCAP-7958, October 1972.

22. F. E. Motley and F. F. Cadek, "DNB Test Results for R Grids with Thimble Cold Wall Cells," WCAP-7695-L, Addendum 1, October 1972 (Westinghouse Proprietary) and WCAP-7958, Addendum 1, October 1972.

23. K. W. Hill, F. E. Motley, F. F. Cadek, and A. H. Wenzel, "Effect of 17x17 Fuel Assembly Geometry on DNB," WCAP-8297, March 1974.

24. F. F. Cadek, "Interchannel Thermal Mixing with Mixing Vane Grids," WCAP-7667-L, May 1971 (Westinghouse Proprietary) and WCAP-7775, September 1971.

25. F. E. Motley, A. H. Wenzel, and F. F. Cadek, "The Effect of 17x17 Fuel Assembly Geometry on Interchannel Thermal Mixing," WCAP-8299, March 1974.

26. "Safety-Related Research and Development for Westinghouse Pressurizer Water Reactors, Program Summaries, Fall 1974," WCAP-8485, March 1975.

27. "Westinghouse ECCS Evaluation Model - October 1975 Version," WCAP-8622 (Proprietary) and WCAP-8623 (Non-Proprietary), November 1975.

1.6 MATERIAL INCORPORATED BY REFERENCE

1.6.1 Topical Reports

Table 1.6.1-1 lists those Westinghouse topical reports (WCAPs) and Framatome Topical Reports BAWs) referenced throughout the Sequoyah FSAR. These WCAPs and BAWs provide information additional to that provided in the FSAR and have been filed separately with the NRC in support of this and other applications.

Table 1.6.1-1 (Sheet 1)

Westinghouse Topical Reports Incorporated by Reference

WCAP Number	Title	Date	Section(s) Referenced	NRC Review Status
8768, Rev.2	"Topical Report - Safety Related Research and Development for Westinghouse - Program Summaries"	Winter 1977 Summer 1978	1.5	
8110	"Test Plans and Results for the Ice Condenser System"	April 6, 1973	1.5, 6.5	A
8110, Supplement 1	"Test Plans and Results for the Ice Condenser System"	April 30, 1973	1.5, 6.5	A
8110, Supplement 2	"Test Plans and Results for the Ice Condenser System"	June 19, 1973	1.5, 6.5	A
8110, Supplement 3	"Test Plans and Results for the Ice Condenser System"	July 18, 1973	1.5, 6.5	A
8110, Supplement 4	"Test Plans and Results for the Ice Condenser System"	October 1, 1973	1.5, 6.5	A
8110, Supplement 7	"Test Plans and Results for the Ice Condenser System"	May 1974	1.5, 6.5	A
8110, Supplement 8	"Test Plans and Results for the Ice Condenser System - Stress and Structural Analysis and Testing of Ice Baskets"	May 1974	1.5, 6.5	A
8110, Supplement 9	"Test Plans and Results for the Ice Condenser System - Ice Fallout from Seismic Testing of Fused Ice Baskets"	May 1974	1.5, 6.5	A
8110, Supplement 10	"Test Plans and Results for the Ice Condenser System - Static Testing of Production Ice Baskets"	September 1974	1.5, 6.5	A

Table 1.6.1-1 (Sheet 2)

Westinghouse Topical Reports Incorporated by Reference

WCAP Number	Title	Date	Section(s) Referenced	NRC Review Status
8110, Supplement 6	"Test Plans and Results for the Ice Condenser System - Ice Condenser"	May 1974	1.5	A
8078	"Ice Condenser Containment Pressure Transient Analysis Method"	March 1973	1.5, 6.2	A
7426	"Iodine Removal in the Ice Condenser System"	March 1970	1.5, 15.5, APX6A	A
8282 (Prop. incl. Addenda) (Prop.)	"Final Report Ice Condenser Full-Scale Section Tests at Waltz Mill Facility"	May 1974	1.5, 6.5	A
3385 Series (specif. 3385-18, 20 and 22 through 37)	"Reports Data from Saxton Reactor"	--	1.5	0
3385-57	"Evaluation of Saxton Core II Fuel Materials Performance"	July 1974	1.5	0
8288	"Safety Analysis of the 17x17 Fuel Assembly for Combined Seismic and Loss-of-Coolant Accident"	December 1973	1.5	A
8279	"Hydraulic Flow Test of the 17x17 Fuel Assembly"	February 1974	1.5	A
7941-L (Prop.) 7959 (Non-Prop.)	"Effect of Axial Spacing on Interchannel Thermal Mixing with R Mixing Vane Grid"	June 1972 October 1972	1.5	A
8446 (Prop.) 8449 (Non-Prop.)	"17x17 Driveline Component Tests - Phase IB, II, III, D-Loop Drop and Deflection"	December 1974	1.5	A

Table 1.6.1-1 (Sheet 3)

Westinghouse Topical Reports Incorporated by Reference

WCAP Number	Title	Date	Section(s) Referenced	NRC Review Status
7695-L (Prop.) 7958 (Non-Prop.)	"DNB Results for New Mixing Vane Grid (R)"	October 1972	1.5	A
7695-L, Addendum 1 (Prop.) 7958, Addendum 1 (Non-Prop.)	"DNB Test Results for R Grids with Thimble Cold Wall Cells"	October 1972	1.5	A
8297	"Effect of 17x17 Fuel Assembly Geometry on DNB"	March 1974	1.5	A
7667-L (Prop.) 7775 (Non-Prop.)	"Interchannel Thermal Mixing with Mixing Vane Grids"	May 1971 September 1971	1.5	A
8299	"The Effect of 17x17 Fuel Assembly Geometry on Interchannel Thermal Mixing"	March 1974	1.5	A
8485	"Safety-Related Research and Development for Westinghouse Pressurizer Water Reactors, Program Summaries, Fall 1974"	March 1974	1.5	
8622 (Prop.) 8623 (Non-Prop.)	"Westinghouse ECCS Evaluation Model - October Version"	November 1975	1.5	A
7822	"Indian Point Unit No. 2 Internals Mechanical Analysis for Blowdown Excitation"	December 1971	3.9	
7920	"Indian Point Unit No. 2 Primary Loop Vibration Test Program"	--	3.9	

Table 1.6.1-1 (Sheet 4)

Westinghouse Topical Reports Incorporated by Reference

WCAP Number	Title	Date	Section(s) Referenced	NRC Review Status
8373	"Qualification of Westinghouse Seismic Testing Procedure for Electrical Equipment Tested Prior to May 1974"	--	3.9	
7558	"Seismic Vibration Testing with Sine Beats"	October 1971	3.9	
8516 (Prop.) 8517 (Non-Prop.)	"UHI Plant Internals Vibration Measurement Program and Pre- and Post- Hot Functional Examinations"	March 1975	3.9	A A
9645 (Prop.) 9646 (Non-Prop.)	"Verification of Upper Head Injection Reactor Vessel Internals for Pre-Operational Tests on Sequoyah 1 Power Plant"	March 1981	3.9	
7422	"Westinghouse PWR Core Behavior Following a Loss-of-Coolant Accident"	September 1971	3.9	
7950	"Fuel Assembly Safety Analysis for Combined Seismic and Loss-of-Coolant Accident"	July 1972	3.9	A
7422	"Westinghouse PWR Core Behavior Following a Loss-of-Coolant Accident"	September 1971	3.9	
7918, Rev. 1	"Description of the BLODWN-2 Computer Code"	October 1970	3.9	
7401	"Loss-of-Coolant Accident Analysis: Comparison Between BLODEEN-2 Code Results and Test Data"	Number 1969	3.9	
7817	"Seismic Test of Electrical and Control Equipment"	December 1971	3.10	

Table 1.6.1-1 (Sheet 5)

Westinghouse Topical Reports Incorporated by Reference

WCAP Number	Title	Date	Section(s) Referenced	NRC Review Status
7817, Supplement 1	"Seismic Testing of Electrical and Control Equipment"	December 1971	3.10	
7817, Supplement 2	"Seismic Testing of Electrical and Control Equipment"	January 1971	3.10	
7817, Supplement 3	"Seismic Testing of Electrical and Control Equipment"	January 1971	3.10	
7774, Volume 1	"Enrironmental Testing of Engineered Safety Features Related Equipment (NSSS-Standard Scope)"	August 1971	6.3	
8301 (Prop.) 8305 (Non-Prop.)	"LOCTA-IV Program: Loss-of-Coolant Transient Analysis"	June 1974	15.3, 15.4	
7422-L (Prop.) 7422 (Non-Prop.)	"Westinghouse PWR Core Behavior Following a Loss-of-Coolant Accident"	January 1970 August 1971	15.4	
8219	"Fuel Densification Experimental Results and Model for Reactor Application"	October 1973	15.4	
7750	"A Comprehensive Space-Time Dependent Analysis of Loss-of Coolant (Satan 4 Digital Code)"	August 1971	15.4, 5.2	
7665	"PWR FLECHT (Full Length Emergency Core Heat Transfer), Final Report"	April 1971	15.4	
7437-L (Prop.) 7835 (Non-Prop.)	"LOCTA-R2 Program" Loss-of-Coolant Transient Analysis"	January 1970 January 1972	15.4	

Table 1.6.1-1 (Sheet 6)

Westinghouse Topical Reports Incorporated by Reference

WCAP Number	Title	Date	Section(s) Referenced	NRC Review Status
7909	"MARVEL - A Digital Computer Code for Transient Analysis of A Multiloop PWR System"	June 1972	15.4, 15.1	
7969	"Calculation of Flow Coastdown after Loss of Reactor Coolant Pump (PHOENIX Code)"	September 1972	15.4	
7907	"LOFTRAN Code Description"	June 1972	15.4, 15.1	
7306	"Reactor Protection System Diversity in Westinghouse Pressurized Water Reactors"	April 1969	15.4,7.1,7.2	
7588, Rev. 1	"An Evaluation of the Rod Ejection Accident in Westinghouse Pressurized Water Reactors Using Special Kinetics Method"	December 1971	15.4, 15.5	A
7979	"TWINKLE - A Multi-Dimensional neutron Kinetics Computer Code"	November 1972	15.4, 15.1	A
8339 (Prop.)	"Westinghouse ECCS Evaluation Model - Summary"	June 1974	15.4	
8339 (Non-Prop.)		July 1974	15.4	A
8302 (Prop.)	"SATAN-VI Program: Comprehensive Space-Time Dependent Analysis of Loss-of-Coolant"	June 1974	15.4	A
8306 (Non-Prop.)		June 1974	15.4	A
8170 (Prop.)	"Calculational Model for Core Reflooding After a Loss-of-Coolant Accident (WREFLOOD CASE)"	June 1974	15.4	A
8171 (Non-Prop.)		June 1974	15.4	A

Table 1.6.1-1 (Sheet 7)

Westinghouse Topical Reports Incorporated by Reference

WCAP Number	Title	Date	Section(s) Referenced	NRC Review Status
8354, Supplement 1 (Prop.)	"Long Term Ice Condenser Containment LOTIC Code Supplement 1"	July 1974	15.4	A
8355, (Non-Prop.)		May 1975	15.4	A
9220 (Prop.)	"Westinghouse ECCS Evaluation Model February 1978 Version"	February 1978	15.4	
9221 (Non-Prop.)		February 1978	15.4	
7372	"Control of the Hydrogen Concentration Following a Loss-of-Coolant Accident by Containment Venting for the H. B. Robinson Plant"	November 1969	15.4	A
8370, Rev. 7A	"Quality Assurance Plan Westinghouse Nuclear Energy Systems Divisions"	February 1975	17.1B	A
8370, Rev. 8A	"Westinghouse Water Reactor Divisions Quality Assurance Plan"	September 1977	17.1B	A
8370, Rev. 8A	"Westinghouse Water Reactor Divisions Quality Assurance Plan"	October 1979	17.1B	
7800, Rev. 5	"Nuclear Fuel Division Quality Assurance Program Plan"	December 1977	17.1B	
7800, Rev. 5	"Nuclear Fuel Division Quality Assurance Program Plan"	December 1977	17.1B	
8336 (Prop.)	"Ice Condenser System Lower Inlet Door Shock Absorber Test Plans and Results"	May 1974		A
8110, Supplement 5 (Non-Prop.)		May 1974	6.5	A

Table 1.6.1-1 (Sheet 8)

Westinghouse Topical Reports Incorporated by Reference

WCAP Number	Title	Date	Section(s) Referenced	NRC Review Status
8304 (Prop.)	"Stress and Structural Analysis and Testing of Ice Baskets"	May 1974	6.5	A
8110, Supplement 9-A	"Ice Fallout From Seismic Testing of Fused Ice Basket"	May 1974	6.5	
9725	"Westinghouse Technical Support Complex"	June 1980	7.8	
8200, Rev. 2 (Prop.)	"WFLASH-4 FORTRAN-IV Computer Program for Simulation of Transients in a Multi-Loop PWR"			A
8261, Rev. 1 (Non-Prop)		August 1974	15.3	A
8219	"Fuel Densification Experimental Results and Model for Reactor Application"	October 1973	15.3	A
7835	"LOCTRA-R2 Program Loss-of-Coolant Transient Analysis"	January 1972	15.3	
7213 (Prop.)	"The TURTLE 24.0 Diffusion Depletion Code"	June 1968	15.1	A
7758 (Non-Prop.)		September 1971	15.3	A
3296-26	"LEOPARD - A Spectrum Dependent Non-Spatial Depletion Code for the IBM-7094"	September 1963	15.3, 15.4, 15.1	
7969	"Calculation of Flow Coastdown after Loss of Reactor Coolant Pump (PHOENIX Code)"	September 1972	15.3, 15.1	
7907	"LOFTRAN Code Description"	June 1972	15.3	
7908	"FACTRAN, A Fortran-IV Code for Thermal Transients in UO_2 Fuel Rods"	June 1972	15.3, 15.1	

Table 1.6.1-1 (Sheet 9)

Westinghouse Topical Reports Incorporated by Reference

WCAP Number	Title	Date	Section(s) Referenced	NRC Review Status
8479, Rev. 2 (Prop.) 8480, Rev. 2 (Non-Prop.)	"Westinghouse Emergency Core Cooling System Evaluation Model Application to Plants Equipped with Upper Head Injection"	January 1975	15.3, 15.4	
7894	"Long Term Transient Analysis Program for PWRs (BLKOUT Code)"	June 1972	15.1	
7980	"WIT-6 Reactor Transient Analysis Computer Program Description"	November 1972	15.1	A
7756	"Power Distribution in the R. E. Ginna PWR"	October 1971	7.7	A
7571	"Rod Position Monitoring"	April 1971	7.7	A
7778	"Solid State Rod Control System, Full Length"	December 1971	7.7	
7769, Rev. 1	"Overpressure Protection for Westinghouse Pressurized Water Reactors"	June 1972	5.2	
7706	"An Evaluation of Solid State Logic Reactor Protection in Anticipated Transients"	September 1971	7.1,7.2,7.3	
7862	"Isolation Tests - Process Instrumentation Isolation Amplifier - Westinghouse Computer and Instrumentation Division"	September 1972	7.2	A
7705	"Engineered Safeguards Final Device or Activator Testing"	February 1973	7.3	
7924	"Basis for Heatup and Cooldown Limit Curves"	August 1972	5.2	A

Table 1.6.1-1 (Sheet 10)

Westinghouse Topical Reports Incorporated by Reference

WCAP Number	Title	Date	Section(s) Referenced	NRC Review Status
7488-L (Prop.)	"Solid State Logic Protection System Description"	March 1971	7.2, 7.3	A
7672	"Solid State Logic Protection System Description"	May 1971	7.1,7.2,7.3	A
7380-L (Prop.)	"Nuclear Instrumentation System"	January 1971	7.2, 7.7	
7506-L (Prop.)	"Nuclear Instrumentation System Isolation Amplifier"	October 1970	7.2, 7.7	A
7819	"Nuclear Instrumentation System Isolation Amplifier"	January 1972	7.2	A
7744 (Vol. I & II)	"Environmental Testing of Engineered Safety Features Related Equipment"	Sept. 1971 (I) Jan. 1972 (II)	3.11, 6.3 7.3	
7607	"In-Core Instrumentation (Flux-Mapping System and Thermocouples)"	July 1971	7.7	
7921	"Damping Valves of Nuclear Power Plant Components"	November 1972	3.7	A
7671	"Process Instrumentation for Westinghouse Nuclear Steam Supply Systems"	May 1971	5.2,7.2,7.3	
8004	"Topical Report - Safety Related Research and Development for Westinghouse Pressurized Water Reactor Program Summaries"	Fall 1972	1.5	
8077 (Prop.)	"Ice Condenser Containment Pressure Transient Analysis Method"	March 1973	6.2	A

Table 1.6.1-1 (Sheet 11)

Westinghouse Topical Reports Incorporated by Reference

WCAP Number	Title	Date	Section(s) Referenced	NRC Review Status
8185 (Vol. 1 & 2)	"Reference Core Report 17x17"	December 1973	4.0, 15.1, 15.2, 15.3 15.4	
7861	"Methods of Determining the Probability of a Turbine Missile Hitting a Particular Plant Region"	February 1972	10.2	
7623	"Heavy Section Steel Technology Program Technical Report No. 13 - Dynamic Fracture Toughness Properties of Heavy Section Steel"	December 1970	5.2	
*7503, Rev. 1	"Determination of Design Pipe Breaks for the Westinghouse Reactor Coolant System	February 1972	5.2	
5890	"Ultimate Strength Criteria to Ensure No Loss-of-Function of Piping and Vessels Under Earthquake Loading"	1969	5.2	
7820, Supplement 2	"Electric Hydrogen Recombiner for PWR Containments, Equipment Qualification Report"	November 1973	3.11	

Table 1.6.1-1 (Sheet 12)
(Continued)

AREVA Topical Reports Incorporated by Reference

BAW Number	Title	Date	Section(s) Referenced	NRC Review Status
BAW-1419	PEEL - A Transport Code for Special Depletion	May 1978	4.5	Approved
BAW-10054P Rev. 2	Fuel Densification Report	May 1973	4.5	Approved
BAW-10084P-A Rev. 3	Program to Determine In-Reactor Performance of B&W Fuels - Cladding Creep Collapse	July 1995	4.5	Approved
BAW-10096A, Rev. 4	B&W NPGD Quality Assurance Program for the Nuclear Steam System and Nuclear Steam Core Product Lines	March 1982	4.5	Approved
BAW-10115A	NULIF - Neutron Spectrum Generator, Few-Group Constant Calculator and Fuel Depletion Code	February 1972	4.5	Approved
BAW-10133P Rev. 1	Mark C Fuel Assembly LOCA-Seismic Analysis	May 1979	4.5	Approved
BAW-10147P-A Rev. 1	Fuel Rod Bowing in Babcock & Wilcox Fuel Designs	May 1983	4.5	Approved
BAW-10156-A Rev. 1	-LYNXT- Core Transient Thermal-Hydraulic Program	August 1993	4.5	Approved
BAW-10159P-A	BWCMV Correlation of Critical Heat Flux in Mixing Vane Grid Fuel Assemblies	July 1990	4.5	Approved
BAW-10162P-A	TAC03 - Fuel Pin Thermal Analysis Computer Code	October 1989	4.5	Approved
BAW-10163P-A	Core Operating Limits Methodology for Westinghouse Designed PWRs	June 1989	4.5	Approved

Table 1.6.1-1 (Sheet 13)
(Continued)

AREVA Topical Reports Incorporated by Reference

BAW Number	Title	Date	Section(s) Referenced	NRC Review Status
BAW-10168A Rev. 3	B&W LOCA Evaluation Model for Recirculating Steam Generator Plants	November 1993	4.5	Approved
BAW-10170P-A	Statistical Core Design For Mixing Vane Cores	December 1988	4.5	Approved
BAW-10172P-A Rev. 1	Mark-BW Mechanical Design Report	December 1989	4.5	Approved
BAW-10180-A Rev. 1	NEMO - Nodal Expansion Method Optimized	March 1993	4.5	Approved
BAW-10183P-A	Fuel Rod Gas Pressure Criterion (FRGPC)	July 1995	4.5	Approved
BAW-10184P-A	GDTACO - Urania-Gadolinia Thermal Analysis Code	February 1995	4.5	Approved
BAW-10186P-A	Extended Burnup Evaluation	June 2003	4.5	Approved
BAW-10189P	CHF Testing and Analysis of the Mark-BW Fuel Assembly Design	August 1993	4.5	Approved
BAW-10199P	The BWU Critical Heat Flux Correlations	December 1994	4.5	Approved
BAW-10220P	Mark-BW Fuel Assembly Application for Sequoyah Nuclear Units 1 and 2	March 1996	4.5	Submitted
BAW-10227P-A Rev. 1	Evaluation of Advanced Cladding and Structural Material (M5) in PWR Reactor Fuel	June 2003	4.5, 11A	Approved
BAW-10231P-A Rev. 1	COPERNIC Fuel Rod Design Computer Code	January 2004	4.5	Approved

1.7 LIST OF ABBREVIATIONS

1.7.1 Abbreviations of Organizations

AACC	American Association for Contamination Control
ACI	American Concrete Institute
AEC	Atomic Energy Commission
AISC	American Institute of Steel Construction
AMRA	Air Moving and Conditioning Association
ANS	American Nuclear Society
ANSI	American National Standards Institute
ARC	Alliance Research Center
ARI	Air Conditioning and Refrigeration Institute
ASCE	American Society of Civil Engineers
ASHRAE	American Society of Heating, Refrigeration, and Air Conditioning Engineers
ASME	American Society of Mechanical Engineers
ASTM	American Society for Testing Materials
AWS	American Welding Society
AWWA	American Water Works Association
BAW	Framatome Cogema Fuels Topical Reports
BWFC	Babcock and Wilcox Fuels Company
BWNT	Babcock and Wilcox Nuclear Technologies
CE	Civil Engineering of NE
CTI	Cooling Tower Institute
DOT	Department of Transportation
EEB	Electrical Engineering Branch of NE
EDS	Engineering Data Systems
FRA	Framatome
HEI	Heat Exchange Institute
ICRP	International Commission on Radiological Protection
IEEE	Institute of Electrical and Electronics Engineers
INEL	Idaho National Engineering Laboratories
IPCEA	Insulated Power Cable Engineers Association
MIT	Massachusetts Institute of Technology
MTB	Mechanical Technology Branch of NE
NBS	National Bureau of Standards
NE	Nuclear Engineering of NP
NED	Nuclear Equipment Division of Westinghouse
NEMA	National Electric Manufacturers' Association
NES	Nuclear Energy Systems of Westinghouse
NFD	Nuclear Fuel Division of Westinghouse
NFI	Nuclear Fuel Industries
NFPA	National Fire Protection Association
NT	Nuclear Technology of NE
NOAA	National Oceanic and Atmospheric Administration
NP	Nuclear Power

NRC	Nuclear Regulatory Commission
NSD	Nuclear Service Division of Westinghouse
NSF	National Science Foundation
NSRB	Nuclear Safety Review Board
ORNL	Oak Ridge National Laboratory
PD	Pensacola Division of Westinghouse
PORC	Plant Operations Review Committee
PWR-SD	Pressurized Water Reactor Systems Division of Westinghouse
RGE	Rochester Gas and Electric Company
SAMA	Scientific Apparatus Makers Association
SMACNA	Sheet Metal and Air Conditioning Contractors National Association, Inc.
SMD	Specialty Metals Division of Westinghouse
SNEC	Saxon Nuclear Experimental Corporation
SQN	Sequoyah Nuclear Plant
TD	Tampa Division of Westinghouse
TEMA	Tubular Exchange Manufactures Association
TVA	Tennessee Valley Authority
UEM	Union Electricia Madrilina
USACE	United States Army Corps of Engineers
USAS	United States of American Standard
USGS	United States Geological Survey
USWB	United States Weather Bureau
VAA	Volunteer Army Ammunition
WRC	Welding Research Council
W	Westinghouse Electric Corporation

1.7.2 Abbreviations and Symbols

A-Auto	Accident-Automatic
AUX BLDG	Auxiliary Building
ABGTS	Auxiliary Building Gas Treatment System
ABI	Auxiliary Building Isolation
ABN	Abnormal
ac	Alternating Current
A/C	Air Conditioning
ACC	Accumulator
ACR	Auxiliary Control Room
ACS	Auxiliary Charging System
ADS	Automatic Dispatch System
AERCW	Auxiliary Essential Raw Cooling Water
AFD	Axial Flux Difference
AFW	Auxiliary Feedwater
AHU	Air Handling Unit
ALM	Alarm
ALT	Alternate/Alteration
AMB	Ambient
A	Ampere
AMT	Auxiliary Make-up Tank
ANAL	Analysis
ANALZ	Analyzer
AO	Axial Offset
AP-Auto	Accident, Process-Automatic
APDMS	Axial Power Distribution Monitoring System
API	Atecedent Precipitation Index
AT	Accumulator Tank

ATM	Atmosphere
AUO	Assistant Unit Operator
AUTO	Automatic
AUX	Auxiliary
AVG	Average
AWG	American Wire Gage
AZ	Azimuth
B_{eff}	Effective Delayed Neutron Fraction
BAL	Balance
BAT	Boric Acid Tank
BTRY	Battery
BLDG	Building
BLWDN	Blow Down
BLK	Block
BO	Blackout
BOL	Beginning of Life
BRG	Bearing
BKR	Breaker
BPRA	Burnable Poison Rod Assembly
BTD	Bearing Thrust Trip Device
BTU	British Thermal Unit
BTUH	British Thermal Unit per Hour
BWG	Birmingham Wire Gage
BWR	Boiling Water Reactor
C	Centigrade
CAL	Caloric
CAV	Cavity
CB	Control Board
CC	Cubic Centimeters
CCHX	Component Cooling Heat Exchanger
CCP	Centrifugal Charging Pump
CCS	Component Cooling System
CCSDT	Component Cooling Pump Seal Drain Tank
CCST	Component Cooling Surge Tank
CCW	Condenser Circulating Water
CDT	Chemical Drain Tank
CECC	Central Emergency Control Center
CFM	Cubic Feet per Minute
CLFM	Centerline Fuel Melt
CFS	Cubic Feet per Second
CHEM	Chemical
CHF	Critical Heat Flux
CIRC	Circular
CKV	Check Valve
CMPNT	Component
CNDS	Condensate
CNFP	Commercial Nuclear Fuel Plant
CNTM	Containment
COL	Column
COLR	Core Operating Limits Report
CONT	Control/Controller

COMM	Communication
CONC	Concentration
COND	Condenser
CONN	Connect/Connection
CPM	Count per Minute
CPU	Central Processing Unit
CRDL	Control Rod Driveline
CRDM	Control Rod Drive Mechanism
CS	Containment Sump
CSP	Containment Spray Pump
CSSTR	Common Station Service Transformer
CSTG	Casting
CT	Control Transformer
CV	Control Valve
CVCS	Chemical & Volume Control System
CVN	Charpy V-Notch
CWA	Cask Work Area
CWS	Chilled Water Supply
CYL	Cylinder
DB	Dry Bulb
DBA	Design Basis Accident
DBF	Design Basis Flood
dc	Direct Current
DCB	Diesel Control Board
DCS	Distributed Control System
DNB	Departure from Nucleate Boiling
DECON	Decontamination
DEG	Degree
DEMIN	Demineralizer
DEPT	Department
DES	Design
DET	Detector
DF	Decontamination Factor
DISCH	Discharge
DISTR	Distribution
DNB	Departure from Nucleate Boiling
DNBR	Departure from Nucleate Boiling Ratio
DOP	Dioctye Phthalate Test
dp	Differential Pressure
DR	Drain
DSL	Diesel
DWG	Drawing
ECC	Emergency Core Cooling
ECCS	Emergency Core Cooling System
EEP	Environs Emergency Plan
EFL	Effluent
EGTS	Emergency Gas-Treatment System
E-H	Electro Hydraulic Control System
EHC	Electrohydraulic Control System
E/I	Voltage to Current
EJCTR	Ejector
EL	Elevation
ELEC	Electric

ELEM	Elementary/Element
EMD	Electromechanical Device
EMERG	Emergency
EMF	Electro-mechanical Force
EOC	End of Cycle
EOL	End of Life
E/P	Voltage to Pneumatic
EQUIP	Equipment
ERCW	Essential Raw Cooling Water
ERCWS	Essential Raw Cooling Water System
ESF	Engineered Safety Features
EST	Estimation
EVAP	Evaporator
EXCH	Exchange
EXH	Exhaust
EXT	External
EXT STW	Extraction Steam
F	Farenheit
FCV	Flow Control Valve
FD	Feed
FDCT	Floor Drain Collector Tank
FESB	FLEX Equipment Storage Building
FL	Floor
FLD	Field
FLTR	Filter
FLX	Flexible
FPM	Feet per Minute
FPS	Feet per Second
FS	Flow Switch
FSAR	Final Safety Analysis Report/Updated Final Safety Analysis Report
FT	Feet
FW	Feedwater
GA	Gauge
GAL	Gallon
GCB	Generator Circuit Breaker
GDC	General Design Criteria
GDT	Gas Decay Tank
GEF	General Exhaust Fan
GEN	Generator
GEN	General
GND	Ground
GNN	Generator End
GOV	Governor
GPD	Gallons per Day
GPM	Gallons per Minute
GSF	General Supply Fan
GTCC	Greater Than Class C
GVN	Governor End
GWPS	Gaseous Waste Processing System
H_2	Hydrogen
HCF	Hot Channel Factor
HD	Head
HDR	Header
HEPA	High Efficiency Particulate Air

HGR	Hanger
HI-STORM 100	Holtec International Storage and Transfer Operation Reinforced Module
HI-STORM FW	Holtec International Storage Module Flood and Wind
HI-TRAC	Holtec International Transfer Cask
HOR	Horizontal
hp	Horsepower
HP	High Pressure
HPFP	High Pressure Fire Protection System
HR	Hour
HRZ	Horizontal
HS	Hand Switch
HSDT	Hot Shower Drain Tank
HSG	Housing
HTR	Heater
HVAC	Heating, Ventilating and Air Conditioning
HYDR	Hydraulic
HYDRO	Hydrostatic
HZ	Hertz
ICC	Inspection Control Card
I/E	Current to Voltage
I/I	Current to Current
IMP	Impeller
IN	Inch
INDR	Indicator
INFO	Information
INJ	Injection
INOP	Inoperative
INSP	Inspection
INST	Instructions
I/O	Input/Output
I/P	Current to Pneumatic
ISFSI	Independent Spent Fuel Storage Installation

ISOL	Isolation
JB	Junction Box
JCT	Junction
K	Kip
KIP	1000 Pounds
kJ	Kilojoules
kV	Kilovolt
kVA	Kilovolt Ampere
kW	Kilowatt
kWH	Kilowatt Hours
LAB	Laboratory
LB	Pounds
LCO	Limiting Conditions for Operation
LCV	Level Control Valves
LHR	Linear Heat Rate
LLC	Limited Liability Company
LOCA	Loss of Coolant Accident
LP	Low Pressure
LPT	Low Profile Transporter
LPZ	Low Population Zone
LS	Limit Switch
LSS	Lower Support Structure
LTDN	Letdown
LWPS	Liquid Waste Processing System
MAN	Manual
MAP	Maximum Allowable Peak
Mark-BW	Mark-BW fuel
MCC	Motor Control Center
MCR	Main Control Room
MECH	Mechanical
MFPT	Main Feedwater Pump Turbine
MFRR	Manufacturer
MISC	Miscellaneous
MK NO	Mark Number
MOV	Motor Operated Valve
MPC	Multi-Purpose Canister
mR	Millirem
MSR	Moisture Separator Reheater
MKUP	Makeup
MULT	Multiple
MV	Millivolt
MVA	Megavoltamperes
MW	Megawatt
MWH	Megawatt-Hour
MWT	Megawatt Thermal
N_2	Nitrogen
NDT	Nondestructive Testing
NDTT	Nil Ductility Transition Temperature
NIM	Nuclear Instrumentation Module
NIS	Nuclear Instrumentation System
NOM	Nominal

NOR	Normal
NQAM	Nuclear Quality Assurance Manual
NPSH	Net Positive Suction Head
NSSS	Nuclear Steam Supply System
NUC	Nuclear
NVT	Fast Neutron Exposure (No. x Velocity x Time)
O_2	Oxygen
OD	Outside Diameter
OPER	Operator
ORF	Orifice
OSC	Oscillograph
OSGSF	Old Steam Generator Storage Facility
OSG	Original Steam Generators
P-AUTO	Process-Automatic
PAX	Private Automatic Exchange
PCB	Power Circuit Breaker
PCI	Pellet Cladding Interaction
PD	Positive Displacement
PDIS	Pressure Differential Indicating Switch
PDS	Pressure Differential Switch
PF	Power Factor
pH	Measure of Acidity and Basicity
PIE	Post Irradiation Exam
PLT	Plant
PMF	Probable Maximum Flood
PMP	Pump
PMWS	Primary Makeup Water System
PNEU	Pneumatic
PNL	Panel
POSN	Position
PPM	Parts Per Million
PRESS	Pressure
PRI	Primary
PROC	Procedure
PROP	Proportional
PROT	Protection
PRT	Pressurizer Relief Tank
PZR	Pressurizer
PS	Pressure Switch
PSAR	Preliminary Safety Analysis Report
PSCC	Power System Control Center
PSIA	Pounds Per Square Inch, Absolute
PSIG	Pounds Per Square Inch, Gauge
P Signal	High Containment Pressure Signal
PT	Point
PW	Primary Water
PWR	Pressurized Water Reactor
Px	Power Supply
PWR Sply	Power Supply

QA	Quality Assurance
QC	Quality Control
QTY	Quantity
QUAL	Quality
RAD	Radiation
RAD DET	Radiation Detector
RADWASTE	Radioactive Waste
RC	Reactor Coolant
RCC	Rod Cluster Control
RCCA	Rod Cluster Control Assembly
RCDT	Reactor Coolant Drain Tank
RCL	Reactor Coolant Loop
RCP	Reactor Coolant Pumps
RCPB	Reactor Coolant Pressure Boundary
RCS	Reactor Coolant System
RCW	Raw Cooling Water
REAC	Reactor
RECIP	Reciprocating
RECIRC	Recirculation
REF	Reference
REG	Regular
REGEN	Regenerative
REP	Radiological Emergency Plan
RSVR	Reservoir
REV	Revision
RHR	Residual Heat Removal
RHRP	Residual Heat Removal Pump
R/HR	Rem Per Hour
RM	Radiation Monitor
RMS	Radiation Monitoring System
RO	Reactor Operator
RPS	Reactor Protection System
RSG	Replacement Steam Generators
RTNDT	Reference Temperature Ni1 Ductility Frans
RTD	Resistance Temperature Detector
RW	Raw Water
RWMS	Reactor Water Makeup System
RWST	Refueling Water Storage Tank
RV	Reactor Vent
SAC	Service Air Compressor
SAF	Safety
SCD	Statistical Core Design
SCFM	Standard Cubic Feet Per Minute
SCL	Scale
SFP	Spent Fuel Pit
SFPCS	Spent Fuel Pit Cooling System
SG	Steam Generator
SGT	Steam Generating Team
SD	Shutdown

SDL	Statistical Design Limit
SI	Safety Injection
SIP	Safety Injection Pump
SIS	Safety Injection System
SKIM	Skimmer
SLV	Sleeve
SM	Shift Manager
SMPL	Sampling
SQN	Sequoyah Nuclear Plant
SOL	Solenoid
SP	Set Point
SP GR	Specific Gravity
SRO	Senior Reactor Operator
SRST	Spent Resin Storage Tank
SS	Stainless Steel
SSE	Safe Shutdown Earthquake
S Signal	Safety Injection System Signal
SSPS	Solid State Protection System
STBY	Standby
STD	Standard
STM	Steam
STM GEN	Steam Generator
STP	Standard Temperature and Pressure
SUCT	Suction
SW	Switch
SWG	Switch Gear
SWP	Screen Wash Pump
SYS	System
TC	Thermocouple
TD	(removing existing TD, not used) Theoretical Density
TDC	Thermal Diffusion Coefficient
TDCT	Tritiated Drain Collector Tank
TEMP	Temperature
TFTR	Transportable Flow Test Rig
THERM	Thermal
THERMO	Thermostat
TIG	Tungsten Inert Gas
TK	Tank
TR	Transmitter-Receiver
TRANS	Transfer/Transformer
TRM	Tennessee River Mile
TURB	Turbine
TWR	Tower
UHI	Upper Head Injection
UO	Unit Operator
UPSTR	Upstream
US	Unit Supervisor

USST	Unit Station Service Transformer
UV	Undervoltage
V	Volts
Vac	Volts - ac
Vdc	Volts - dc
VAC	Vacuum
VCT	Volume Control Tank
VEL	Velocity
VENT	Ventilation
VERT	Vertical
VISC	Viscosity
VLV	Valve
E/I	Voltage to Current
VOL	Volume
WDS	Waste Disposal System
E/P	Voltage to Pneumatic
WGS	Waste Gas System
WPS	Waste Processing System
WT	Weight
WTR	Water
WTS	Waste Treatment System
XMTR	Transmitter
XS	Transformer Switch
ZS	Position Switch

1.8 TECHNICAL QUALIFICATIONS OF APPLICANT (HISTORICAL)

The TVA power system is one of the largest in the United States with hydro, fossil and nuclear generating capability. TVA is primarily a wholesaler of power, operating generating plants, and transmission facilities, but no retail distribution systems. The TVA transmission system contains over 17,000 miles of lines. TVA supplies power over an area of about 80,000 square miles in parts of seven southeastern states, containing more than 2.3 million residential, farm, commercial and industrial customers.

The Tennessee Valley Authority has been engaged in the business of designing, constructing, and operating large power-producing hydro and steam units for over 50 years. TVA's technical qualifications to construct and operate Sequoyah units 1 and 2 are evidenced by the skills and experience gained over many years in the power business. This experience is supplemented by the skills and experience of TVA's consultants and its contractors in assisting in the design, construction, and operation of the Sequoyah Nuclear Plant.

TVA acts as its own engineer-constructor and as such has pioneered in erecting large generating units. Examples are the 1,150 megawatt electric (MWe) unit placed in operation at the Paradise Steam Plant; the 1,300 MWe units in operation at the Cumberland Steam Plant; the three 1,100 MWe units at the Browns Ferry Nuclear Plant; and one 1,170 MWe unit at the Watts Bar Nuclear Plant. A total of over 67 individual steam generating units have been designed, constructed, and placed in operation by TVA in the past 35 years.

TVA has an experienced, competent nuclear plant design organization, including a large number of engineers with many years of steam plant experience in the design and construction of large steam plants, including the design of the Browns Ferry (completed), Sequoyah (completed), and Watts Bar (Unit 1 completed), and Watts Bar Unit 2 and Bellefonte Nuclear Plants which are now in a deferred status. Hartsville, Phipps Bend, and Yellow Creek Nuclear Plants have been canceled.

Much of TVA's experience has been gained from early and continuing participation in nuclear power studies. In 1946, TVA took part in the Daniels Power Pile Study at Oak Ridge and the work of the Parker Committee, which surveyed prospects of nuclear power application. In 1953, TVA started developing a nuclear power staff and began a more detailed study of possible uses of nuclear power on its system.

In 1960, TVA agreed to operate the Experimental Gas-Cooled Reactor for the Atomic Energy Commission at Oak Ridge, Tennessee and developed a technical and operating staff. Many of these trained and experienced people were assigned to TVA engineering and operating organizations were directly involved in the planning, design, construction, and operation of the Sequoyah Nuclear Plant.

TABLE OF CONTENTS

Section	Title	Page
2.0	SITE CHARACTERISTICS	
2.1	GEOGRAPHY AND DEMOGRAPHY	2.1-1
2.1.1	SITE LOCATION	2.1-1
2.1.2	SITE DESCRIPTION	2.1-1
2.1.2.1	Exclusion Area Control	2.1-1
2.1.2.2	Boundaries for Establishing Effluent Release Limits	2.1-2
2.1.2.3	The Restricted Area	2.1-2
2.1.3	POPULATION AND POPULATION DISTRIBUTION	2.1-2
2.1.3.1	Population Within Ten Miles	2.1-2
2.1.3.2	Population Within 50 Miles	2.1-3
2.1.3.3	Low Population Zone	2.1-3
2.1.3.4	Transient Population	2.1-3
2.1.3.5	Population Center	2.1-4
2.1.3.6	Public Facilities and Institutions	2.1-4
2.1.4	USES OF ADJACENT LANDS AND WATERS	2.1-4
2.2	NEARBY INDUSTRIAL, TRANSPORTATION, AND MILITARY FACILITIES	2.2-1
2.2.1	LOCATION AND ROUTES	2.2-1
2.2.2	DESCRIPTION OF PRODUCTS	2.2-1
2.2.3	EVALUATIONS	2.2-2
2.2.3.1	Evaluation of Explosion Hazards from Nearby Transportation Routes	2.2-2
2.2.3.2	Evaluation of Barge Impact with the ERCW Intake Structure	2.2-4
2.2.3.3	Evaluation of Hazards from Air Traffic	2.2-7
2.2.3.4	Evaluation of the Accidental Release of Toxic Gases from Onsite Storage Facilities	2.2-7
2.2.3.5	Evaluation of the Accidental Release of Toxic Gases from Offsite Storage Facilities	2.2-7
2.2.3.6	Evaluation of the Upstream Release of Corrosive Liquids or Oils on the ERCW Intake Structure	2.2-8
2.2.3.7	Evaluation of the Potential for Damage to Equipment or Structures Important to Reactor Safety in the Event of the Collapse of Cooling Towers	2.2-8

TABLE OF CONTENTS

Section	Title	Page
2.2.3.8	Evaluation of a Release on the Tennessee River of Toxic or Flammable Materials on Plant Safety Features and Control Room Habitability	2.2-8
2.2.3.9	Evaluation of Potential Fire and Smoke Hazard from Onsite Oil Storage Facilities	2.2-9
2.2.4	FOREST FIRES	2.2-9
2.2.5	REFERENCES	2.2-9
2.3	METEOROLOGY	2.3-1
2.3.1	REGIONAL METEOROLOGY	2.3-1
2.3.1.1	Data Sources	2.3-1
2.3.1.2	General Climate	2.3-1
2.3.1.3	Severe Weather	2.3-2
2.3.2	LOCAL METEOROLOGY	2.3-3
2.3.2.1	Data Sources	2.3-4
2.3.2.2	Normal and Extreme Values of Meteorological Parameters	2.3-4
2.3.2.3	Potential Influence of the Plant and Its Facilities on Local Meteorology	2.3-7
2.3.2.4	Topographical Description	2.3-7
2.3.3	ON-SITE METEOROLOGICAL MEASUREMENT PROGRAM	2.3-8
2.3.3.1	Siting and Description of Instruments	2.3-8
2.3.3.2	Data Acquisition System	2.3-9
2.3.3.3	Data Recording and Display	2.3-10
2.3.3.4	Equipment Servicing, Maintenance and Calibration	2.3-11
2.3.3.5	Operational Meteorological Program	2.3-11
2.3.4	SHORT-TERM (ACCIDENT) DIFFUSION ESTIMATES	2.3-12
2.3.4.1	Objective	2.3-12
2.3.4.2	Calculations	2.3-12
2.3.5	LONG-TERM (ROUTINE) DIFFUSION ESTIMATES	2.3-16
2.3.5.1	Objective	2.3-16
2.3.5.2	Calculations	2.3-16
2.3.6	REFERENCES	2.3-17

TABLE OF CONTENTS

Section	Title	Page
2.4	HYDROLOGIC ENGINEERING	2.4-1
2.4.1	HYDROLOGIC DESCRIPTION	2.4-1
2.4.1.1	Site and Facilities	2.4-1
2.4.1.2	Hydrosphere	2.4-1
2.4.2	FLOODS	2.4-5
2.4.2.1	Flood History (Historical)	2.4-5
2.4.2.2	Flood Design Considerations	2.4-5
2.4.3	PROBABLE MAXIMUM FLOOD (PMF) ON STREAMS AND RIVERS	2.4-7
2.4.3.1	Probable Maximum Precipitation	2.4-7
2.4.3.2	Precipitation Losses	2.4-8
2.4.3.3	Runoff Model	2.4-9
2.4.3.4	Probable Maximum Flood Flow	2.4-11
2.4.3.5	Water Level Determinations	2.4-12
2.4.3.6	Coincident Wind Wave Activity	2.4-13
2.4.4	POTENTIAL DAM FAILURES (SEISMICALLY AND OTHERWISE INDUCED)	2.4-15
2.4.4.1	Reservoir Description	2.4-15
2.4.4.2	Dam Failure Permutations	2.4-15
2.4.4.3	Unsteady Flow Analysis of Potential Dam Failures	2.4-30
2.4.4.4	Water Level at Plant Site	2.4-31
2.4.5	PROBABLE MAXIMUM SURGE AND SEICHE FLOODING (HISTORICAL INFORMATION)	2.4-31
2.4.6	PROBABLE MAXIMUM TSUNAMI FLOODING (HISTORICAL INFORMATION)	2.4-31
2.4.7	ICE FLOODING AND LANDSLIDES (HISTORICAL INFORMATION)	2.4-31
2.4.8	COOLING WATER CANALS AND RESERVOIRS	2.4-31
2.4.8.1	Canals	2.4-31
2.4.8.2	Reservoirs (Historical Information)	2.4-31
2.4.9	CHANNEL DIVERSIONS (HISTORICAL INFORMATION)	2.4-32
2.4.10	FLOODING PROTECTION REQUIREMENTS	2.4-32
2.4.11	LOW WATER CONSIDERATIONS	2.4-32
2.4.11.1	Low Flow in Rivers and Streams	2.4-32
2.4.11.2	Low Water Resulting from Surges, Seiches, or Tsunamis	2.4-33

TABLE OF CONTENTS

Section	Title	Page
2.4.11.3	Historical Low Water	2.4-33
2.4.11.4	Future Control	2.4-33
2.4.11.5	Plant Requirements	2.4-34
2.4.11.6	Heat Sink Dependability Requirements	2.4-34
2.4.12	ENVIRONMENTAL ACCEPTANCE OF EFFLUENTS	2.4-35
2.4.13	GROUNDWATER (HISTORICAL INFORMATION)	2.4-39
2.4.13.1	Description and Onsite Use	2.4-39
2.4.13.2	Sources	2.4-39
2.4.13.3	Accident Effects	2.4-40
2.4.13.4	Monitoring or Safeguard Requirements	2.4-41
2.4.13.5	Conclusions	2.4-41
2.4.14	TECHNICAL SPECIFICATIONS AND EMERGENCY OPERATIONS REQUIREMENTS	2.4-42
2.4.15	REFERENCES	2.4-42
Appendix 2.4A	FLOOD PROTECTION PLAN	2.4A-i
2.5	GEOLOGY AND SEISMOLOGY	2.5-1
2.5.1	BASIC GEOLOGIC AND SEISMIC DATA	2.5-1
2.5.1.1	Site Location and Scope of Exploration	2.5-1
2.5.1.2	Physiography	2.5-1
2.5.1.3	Geologic History	2.5-1
2.5.1.4	Stratigraphy	2.5-2
2.5.1.5	Structure	2.5-2
2.5.1.6	Groundwater	2.5-5
2.5.1.7	Physical Character of the Rocks	2.5-5
2.5.1.8	Foundation Conditions	2.5-6
2.5.1.9	Physical Characteristics of the Soils	2.5-8
2.5.1.10	Detailed Safety-Related Criteria and Computed Factors of Safety for the Materials Underlying the Foundations for Category I Structures	2.5-9
2.5.1.11	Compaction Criteria for Engineered Backfill	2.5-10
2.5.2	VIBRATORY GROUND MOTION	2.5-12
2.5.2.1	Regional Tectonics	2.5-12
2.5.2.2	Site Area Tectonics	2.5-15
2.5.2.3	Seismic History	2.5-15
2.5.2.4	Site Seismic Evaluation	2.5-20
2.5.3	SURFACE FAULTING	2.5-22

TABLE OF CONTENTS

Section	Title	Page
2.5.4	STABILITY OF SURFACE MATERIALS	2.5-22
2.5.4.1	Subsidence	2.5-22
2.5.4.2	Zones of Deformed or Weak Materials	2.5-23
2.5.4.3	Bedrock Stresses	2.5-23
2.5.5	STABILITY OF SUBSURFACE MATERIALS	2.5-23
2.5.5.1	Excavations and Backfill	2.5-23
2.5.5.2	Liquefaction Potential	2.5-23
2.5.5.3	Static Analysis	2.5-23
2.5.6	SLOPE STABILITY	2.5-25
2.5.6.1	Slope Characteristics	2.5-25
2.5.6.2	Design Criteria And Analysis	2.5-26
2.5.6.3	Compaction Specifications	2.5-27
2.5.7	REFERENCES	2.5-27
2.6	CONCLUSIONS	2.6-1

LIST OF TABLES

Number	Title
2.1.1-1	Coordinates of Unit 1 Reactor Building Centerline
2.1.2-1	Deleted
2.1.2-2	Deleted
2.1.3-1	1970 Population Distribution Within Ten Miles of Site
2.1.3-2	1980 Population Distribution Within Ten Miles of Site
2.1.3-3	1985 Population Distribution Within Ten Miles of Site
2.1.3-4	1990 Population Distribution Within Ten Miles of Site
2.1.3-5	2000 Population Distribution Within Ten Miles of Site
2.1.3-6	2010 Population Distribution Within Ten Miles of Site
2.1.3-6a	2020 Population Distribution Within Ten Miles of Site
2.1.3-7	1970 Population Distribution Within Fifty Miles of Site
2.1.3-8	1980 Population Distribution Within Fifty Miles of Site
2.1.3-9	1985 Population Distribution Within Fifty Miles of Site
2.1.3-10	1990 Population Distribution Within Fifty Miles of Site
2.1.3-11	2000 Population Distribution Within Fifty Miles of Site
2.1.3-12	2010 Population Distribution Within Fifty Miles of Site
2.1.3-12a	2020 Population Distribution Within Fifty Miles of Site
2.1.3-13	1970 Estimated Peak Hour Recreation Visits Within Ten Miles of Site
2.1.3-14	1980 Estimated Peak Hour Recreation Visits Within Ten Miles of Site
2.1.3-15	1985 Estimated Peak Hour Recreation Visits Within Ten Miles of Site
2.1.3-16	1990 Estimated Peak Hour Recreation Visits With Ten Miles of Site
2.1.3-17	2000 Estimated Peak Hour Recreation Visits Within Ten Miles of Site
2.1.3-18	2010 Estimated Peak Hour Recreation Visits Within Ten Miles of Site
2.1.3-19	2020 Estimated Peak Hour Recreation Visits Within Ten Miles of Site

LIST OF TABLES

Number	Title
2.1.3-20	Educational Institutions in Vicinity of Sequoyah Nuclear Plant 1990-2020
2.1.4-1	Farm Oriented Land Use
2.1.4-2	Crops Harvested
2.2.2-1	Hazardous River Traffic that Passes Sequoyah Nuclear Plant, 1980-1990 (Tons) - U.S. Army Corps of Engineers Data
2.2.2-1a	Hazardous River Traffic that Passes Sequoyah Nuclear Plant 1990 (TVA Survey)
2.2.2-1b	Volunteer Army Ammunition Plant Storage and Transportation of Munitions
2.2.3-1	Barge Freight Traffic Passing Sequoyah Nuclear Plant Site Tennessee River Mile 484.5
2.2.3-2	Tennessee River Traffic Passing Sequoyah Nuclear Plant
2.2.3-3	Gasoline Barge Receipts at Port at Knoxville (In Net Tons)
2.3.2-1	Joint Percentage Frequencies of Wind Speed by Direction Disregarding Stability Class - January 1, 1972 - December 31, 1975
2.3.2-2	Joint Percentage Frequencies of Wind Speed by Direction Disregarding Stability Class - January (72-75)
2.3.2-3	Joint Percentage Frequencies of Wind Speed by Direction Disregarding Stability Class - February (72-75)
2.3.2-4	Joint Percentage Frequencies of Wind Speed by Direction Disregarding Stability Class - March (72-75)
2.3.2-5	Joint Percentage Frequencies of Wind Speed by Direction Disregarding Stability Class - April (72-75)
2.3.2-6	Joint Percentage Frequencies of Wind Speed by Direction Disregarding Stability Class - May (72-75)
2.3.2-7	Joint Percentage Frequencies of Wind Speed by Direction Disregarding Stability Class - June (72-75)
2.3.2-8	Joint Percentage Frequencies of Wind Speed by Direction Disregarding Stability Class - July (72-75)
2.3.2-9	Joint Percentage Frequencies of Wind Speed by Direction Disregarding Stability Class - August (72-75)

LIST OF TABLES

Number	Title
2.3.2-10	Joint Percentage Frequencies of Wind Speed by Direction Disregarding Stability Class - September (72-75)
2.3.2-11	Joint Percentage Frequencies of Wind Speed by Direction Disregarding Stability Class - October (72-75)
2.3.2-12	Joint Percentage Frequencies of Wind Speed by Direction Disregarding Stability Class - November (72-75)
2.3.2-13	Joint Percentage Frequencies of Wind Speed by Direction Disregarding Stability Class - December (72-75)
2.3.2-14	Wind Direction Persistence Data; Disregarding Stability; Sequoyah Nuclear Plant January 1, 1972 - December 31, 1975
2.3.2-15	Temperature; Sequoyah Nuclear Plant; April 2, 1971-March 31, 1972
2.3.2-16	Temperature; Chattanooga, Tennessee
2.3.2-17	Absolute Humidity; Sequoyah Nuclear Plant; April 2, 1971 - March 31, 1972
2.3.2-18	Relative Humidity; Sequoyah Nuclear Plant; April 2, 1971 - March 31, 1972
2.3.2-19	Precipitation; Friendship School, Tennessee; 1948 - 1967
2.3.2-20	Snowfall; Chattanooga, Tennessee
2.3.2-21	Heavy Fog; Chattanooga, Tennessee
2.3.2-22	Percent Occurrence of Atmospheric Stability; Sequoyah Nuclear Plant; January 1, 1972 - December 31, 1975
2.3.2-23	Joint Percentage Frequencies of Wind Speed by Wind Direction for Stability Class A - January 1, 1972 - December 31, 1975
2.3.2-24	Joint Percentage Frequencies of Wind Speed by Wind Direction for Stability Class B - January 1, 1972 - December 31,1975
2.3.2-25	Joint Percentage Frequencies of Wind Speed by Wind Direction for Stability Class C - January 1, 1972 - December 31, 1975

LIST OF TABLES

Number	Title
2.3.2-26	Joint Percentage Frequencies of Wind Speed by Wind Direction for Stability Class D - January 1, 1972 - December 31, 1975
2.3.2-27	Joint Percentage Frequencies of Wind Speed by Wind Direction for Stability Class E - January 1, 1972 - December 31, 1975
2.3.2-28	Joint Percentage Frequencies of Wind Speed by Wind Direction for Stability Class F - January 1, 1972 - December 31, 1975
2.3.2-29	Joint Percentage Frequencies of Wind Speed by Wind Direction for Stability Class G - January 1, 1972 - December 31, 1975
2.3.2-30	Percent of Observations in Each Stability Class Hourly Average and End of Hour Temperature Differences (ΔT) (May 1975 - April 1976)
2.3.2-31	Joint Percentage Frequencies of Wind Direction and Wind speed for Different Stability Classes, Stability Class A (May 1975 - April 1976)
2.3.2-32	Joint Percentage Frequencies of Wind Direction and Wind Speed for Different Stability Classes, Stability Class A (May 1975 - April 1976)
2.3.2-33	Joint Percentage Frequencies of Wind Direction and Wind Speed for Different Stability Classes, Stability Class B (May 1975 - April 1976)
2.3.2-34	Joint Percentage Frequencies of Wind Direction and Wind Speed for Different Stability Classes, Stability Class B (May 1975 - April 1976)
2.3.2-35	Joint Percentage Frequencies of Wind Direction and wind Speed for Different Stability Classes, Stability Class C (May 1975 - April 1976)
2.3.2-36	Joint Percentage Frequencies of Wind Direction and Wind Speed for Different Stability Classes, Stability Class C (May 1975 - April 1976)
2.3.2-37	Joint Percentage Frequencies of Wind Direction and Wind Speed for Different Stability Classes, Stability Class D (May 1975 - April 1976)
2.3.2-38	Joint Percentage Frequencies of Wind Direction and Wind Speed for Different Stability Classes, Stability Class D (May 1975 - April 1976)
2.3.2-39	Joint Percentage Frequencies of Wind Direction and Wind Speed for Different Stability Classes, Stability Class E (May 1975 - April 1976)
2.3.2-40	Joint Percentage Frequencies of Wind Direction and Wind Speed for Different Stability Classes, Stability Class E (May 1975 - April 1976)
2.3.2-41	Joint Percentage Frequencies of Wind Direction and Wind Speed for Different Stability Classes, Stability Class F (May 1975 - April 1976)

LIST OF TABLES

Number	Title
2.3.2-42	Joint Percentage Frequencies of Wind Direction and Wind Speed for Different Stability Classes, Stability Class F (May 1975 - April 1976)
2.3.2-43	Joint Percentage Frequencies of Wind Direction and Wind Speed for Different Stability Classes, Stability Class G (May 1975 - April 1976)
2.3.2-44	Joint Percentage Frequencies of Wind Direction and Wind Speed for Different Stability Classes, Stability Class G (May 1975 - April 1976)
2.3.2-45	Joint Percentage Frequencies of Wind Direction and Wind Speed for Different Stability Classes, Stability Class A (May 1975 - April 1976)
2.3.2-46	Joint Percentage Frequencies of Wind Direction and Wind Speed for Different Stability Classes, Stability Class A (May 1975 - April 1976)
2.3.2-47	Joint Percentage Frequencies of Wind Direction and Wind Speed for Different Stability Classes, Stability Class B (May 1975 - April 1976)
2.3.2-48	Joint Percentage Frequencies of Wind Direction and Wind Speed for Different Stability Classes, Stability Class B (May 1975 - April 1976)
2.3.2-49	Joint Percentage Frequencies of Wind Direction and Wind Speed for Different Stability Classes, Stability Class C (May 1975 - April 1976)
2.3.2-50	Joint Percentage Frequencies of Wind Direction and Wind Speed for Different Stability Classes, Stability Class C (May 1975 - April 1976)
2.3.2-51	Joint Percentage Frequencies of Wind Direction and Wind Speed for Different Stability Classes, Stability Class D (May 1975 - April 1976)
2.3.2-52	Joint Percentage Frequencies of Wind Direction and Wind Speed for Different Stability Classes, Stability Class D (May 1975 - April 1976)
2.3.2-53	Joint Percentage Frequencies of Wind Direction and Wind Speed for Different Stability Classes, Stability Class E (May 1975 - April 1976)
2.3.2-54	Joint Percentage Frequencies of Wind Direction and Wind Speed for Different Stability Classes, Stability Class E (May 1975 - April 1976)
2.3.2-55	Joint Percentage Frequencies of Wind Direction and Wind Speed for Different Stability Classes, Stability Class F (May 1975 - April 1976)
2.3.2-56	Joint Percentage Frequencies of Wind Direction and Wind Speed for Different Stability Classes, Stability Class F (May 1975 - April 1976)
2.3.2-57	Joint Percentage Frequencies of Wind Direction and Wind Speed for Different Stability Classes, Stability Class G (May 1975 - April 1976)

LIST OF TABLES

Number	Title
2.3.2-58	Joint Percentage Frequencies of Wind Direction and Wind Speed for Different Stability Classes, Stability Class G (May 1975 - April 1976)
2.3.4-1	Distances from Release Zones or Points to Exclusion Area Boundary
2.3.4-2	Atmospheric Dispersion Factors Frequency Distribution; Calculated 1-Hour-Average Atmospheric Dispersion Factors at Exclusion Area Boundary Due to Ground-Level Releases from Release Zone 1
2.3.4-3	Atmospheric Dispersion Factors Frequency Distribution; Calculated 1-Hour-Average Atmospheric Dispersion Factors at Exclusion Area Boundary Due to Ground-Level Releases from Release Zone 2
2.3.4-4	Atmospheric Dispersion Factors Frequency Distribution; Calculated 1-Hour-Average Atmospheric Dispersion Factors at Exclusion Area Boundary Due to Ground-Level Releases from Release Zone 3
2.3.4-5	Atmospheric Dispersion Factors Frequency Distribution; Calculated 1-Hour-Average Atmospheric Dispersion Factors at 556 Meters (Minimum Exclusion Area Boundary Distance) Due to Ground-Level Releases from Release Zone 1
2.3.4-6	Atmospheric Dispersion Factors Frequency Distribution; Calculated 1-Hour-Average Atmospheric Dispersion Factors at 600 Meters (Minimum Exclusion Area Boundary Distance) Due to Ground-Level Releases from Release Zone 2
2.3.4-7	Atmospheric Dispersion Factors Frequency Distribution; Calculated 1-Hour-Average Atmospheric Dispersion Factors at 509 Meters (Minimum Exclusion Area Boundary Distance) Due to Ground-Level Releases from Release Zone 3
2.3.4-8	Atmospheric Dispersion Factors Frequency Distribution; Calculated 1-Hour-Average Atmospheric Dispersion Factors at Outer Boundary of Low Population Zone Due to Ground-Level Releases from a Location Representative of Release Zone 1, Release Zone 2, and Release Zone 3
2.3.4-9	Atmospheric Dispersion Factors Frequency Distribution; Calculated 8-Hour-Average Atmospheric Dispersion Factors at Outer Boundary of Low Population Zone Due to Ground-Level Releases from a Location Representative of Release Zone 1, Release Zone 2, and Release Zone 3
2.3.4-10	Atmospheric Dispersion Factors Frequency Distribution; Calculated 16-Hour-Average Atmospheric Dispersion Factors at Outer Boundary of Low Population Zone Due to Ground-Level Releases from a Location Representative of Release Zone 1, Release Zone 2, and Release Zone 3

LIST OF TABLES

Number	Title
2.3.4-11	Atmospheric Dispersion Factors Frequency Distribution; Calculated 3-Day-Average Atmospheric Dispersion Factors at Outer Boundary of Low Population Zone Due to Ground-Level Releases from a Location Representative of Release Zone 1, Release Zone 2, and Release Zone 3
2.3.4-12	Atmospheric Dilution Factors Frequency Distribution; Calculated 26-Day-Average Atmospheric Dilution Factors at Outer Boundary of Low Population Zone Due to ground-Level Releases from a Location Representative of Release Zone 1, Release Zone 2, and Release Zone 3
2.3.4-13	Fifth Percentile Atmospheric Dispersion Factors (c/Q's) for Comparative Data - Hourly Average and End of Hour Temperature Differences (ΔT)
2.3.4-14	Average Annual Dispersion Factors, c/Q (s/m^3), Downwind Distance (miles)
2.4.1-1	Facts about Major TVA Dams and Reservoirs
2.4.1-2	Facts about Non-TVA Dam and Reservoir Projects
2.4.1-3	Flood Detention Capacity - TVA Projects above Sequoyah Nuclear Plant
2.4.1-4	Public and Industrial Surface Water Supplies Withdrawn from the 98.6 Mile Reach of the Tennessee River Between Dayton, Tennessee, and Meade Corporation, Stevenson, Alabama
2.4.1-5	Dam Safety Modification Status (Hydrologic)
2.4.3-1	Probable Maximum Storm Rainfall and Precipitation Excess
2.4.3-2	Unit Hydrograph Data
2.4.4-1	Floods from Postulated Seismic Failure of Upstream Dams
2.4.13-1	Well and Spring Inventory Within 2-Mile Radius of Sequoyah Nuclear Plant Site
2.4.13-2	Groundwater Supplies Within 20-Mile Radius of the Plant Site
2.5.1-1	Summary of In Situ Up-Hole Dynamic Testing Reactor Foundation Area
2.5.1-2	Summary of In Situ Cross-Hole Dynamic Testing Reactor Foundation Area
2.5.1-3	Equation for Dynamic Modulus of Elasticity
2.5.1-4	Summary of Grouting
2.5.1-5	Static and Dynamic Rock-Bearing Capacities for Rock Supported Category I Structures

LIST OF TABLES

Number	Title
2.5.1-6	Soil-Bearing Capacities and Factors of Safety for Soil Supported Category I Structures
2.5.1-7	Summary of Earthfill Test Data - Density
2.5.1-8	Summary of Earthfill Test Data - Moisture Content
2.5.1-9	Sequoyah Nuclear Plant - Summary of In-Situ Soil Down-Hole - Dynamic Testing Diesel Generator Building
2.5.1-10	Sequoyah Nuclear Plant - Onsite Storage Facility Dynamic Soil Test Array SD-1
2.5.1-11	Sequoyah Nuclear Plant - Onsite Test Facility Dynamic Soil Test Array SD-3
2.5.1-12	Sequoyah Nuclear Plant - ERCW Pipeline In-Situ Down-Hole Soil Dynamics
2.5.1-13	Sequoyah Nuclear Plant - Additional Diesel Generator Building
2.5.1-14	Sequoyah Nuclear Plant - Primary Refueling Water Tanks Seismic Refraction Survey In-Situ Elastic Properties
2.5.2-1	Historical Earthquake Listing - 200 Mi. Radius Around - 85.1 W Longitude - 35.2 N Latitude, February 17, 1982
2.6-1	Sequoyah Nuclear Plant Site Characteristics

LIST OF FIGURES

Number	Title
2.1.1-1	Location of Sequoyah Nuclear Plant Site
2.1.1-2	Features Within 50 Miles
2.1.1-3	Features Within 10 Miles
2.1.2-1	General Site Plan
2.1.2-2	Site Boundary
2.1.3-1	Low Population Zone
2.1.4-1	Land Use in Plant Vicinity
2.1.4-2	Forest Types and Cover - Bradley and Hamilton Counties
2.3.1-1	Normal Sea Level Pressure Distribution over North America and the North Atlantic Ocean
2.3.1-2	Total Number of Forecast Days of High Meteorological Potential for Air Pollution in a 5 Year Period
2.3.2-1	Environmental Data Station Location
2.3.2-2	Climatological Data Sources
2.3.2-3	Wind Rose, 10 M Wind, All Stability Classes January 1, 1972 - December 31, 1975
2.3.2-4	Wind Rose, 10 M Wind, All Stability Classes January (72-75)
2.3.2-5	Wind Rose, 10 M Wind, All Stability Classes February (72-75)
2.3.2-6	Wind Rose, 10 M Wind, All Stability Classes March (72-75)
2.3.2-7	Wind Rose, 10 M Wind, All Stability Classes April (72-75)
2.3.2-8	Wind Rose, 10 M Wind, All Stability Classes May (72-75)
2.3.2-9	Wind Rose, 10 M Wind, All Stability Classes June (72-75)
2.3.2-10	Wind Rose, 10 M Wind, All Stability Classes July (72-75)
2.3.2-11	Wind Rose, 10 M Wind, All Stability Classes August (72-75)
2.3.2-12	Wind Rose, 10 M Wind, All Stability Classes September (72-75)

LIST OF FIGURES

Number	Title
2.3.2-13	Wind Rose, 10 M Wind, All Stability Classes October (72-75)
2.3.2-14	Wind Rose, 10 M Wind, All Stability Classes November (72-75)
2.3.2-15	Wind Rose, 10 M Wind, All Stability Classes December (72-75)
2.3.2-16	10 M Wind, 9 and 46 M Temp - Stability Class A January 1, 1972 - December 31, 1975
2.3.2-17	Wind Rose 10 M Wind, 9 and 46 M Temp - Stability Class B January 1, 1972 - December 31, 1975
2.3.2-18	Wind Rose 10 Wind, 9 and 46 M Temp - Stability Class C January 1, 1972 - December 31, 1975
2.3.2-19	Wind Rose 10 M Wind, 9 and 46 M Temp - Stability Class D January 1, 1972 - December 31, 1975
2.3.2-20	Wind Rose 10 M Wind, 9 and 46 M Temp - Stability Class E January 1, 1972 - December 31, 1975
2.3.2-21	Wind Rose 10 M Wind, 9 and 46 M Temp - Stability Class F January 1, 1972 - December 31, 1975
2.3.2-22	Wind Rose 10 M Wind, 9 and 46 M Temp - Stability Class G January 1, 1972 - December 31, 1975
2.3.2-23	Topography - Within 5 mile Radius (9 sheets)
2.4.1-1	Topographic Map, Plant Vicinity
2.4.1-2	Tennessee River Basin Mean Annual Precipitation, 30-yr Period, 1935 - 1964
2.4.1-3	Multiple - Purpose Reservoir Operations Chickamauga Project (14 sheets)
2.4.2-1	Flood Distribution Diagram, Chattanooga, TN
2.4.3-1	Probable Maximum March Isohyets (21,400-sq mi downstream), 1st 6 hours (in.)
2.4.3-2	Probable Maximum March Isohyets (7980 sq mi), 1st 6 hrs (in.)
2.4.3-3	Rainfall-Time Distribution, Adopted Standard Mass Curve

LIST OF FIGURES

Number	Title
2.4.3-4	72-Hr March Probable Maximum Storm Depths (in)
2.4.3-5	Hydrologic Model Unit Areas
2.4.3-6	6 Hour Unit Hydrographs (11 sheets)
2.4.3-7	1973 Flood - Chickamauga Reservoir Unsteady Flow Model Verification
2.4.3-8	Steady State Model Verification, Watts Bar Dam Tailwater Rating Curve
2.4.3-9	Hydrologic Model Verification 1973 Flood
2.4.3-10	Hydrologic Model Verification 1963 Flood
2.4.3-11	Sequoyah Nuclear Plant Probable Maximum Flood Discharge
2.4.3-12	Sequoyah Nuclear Plant Probable Maximum Flood Elevation
2.4.3-13a	General Grading for Site Drainage
2.4.3-14	ERCW Pump Station Location
2.4.3-15	Sequoyah Nuclear Plant NNW Wind Wave Fetch
2.4.3-16	Sequoyah Nuclear Plant NE Wind Wave Fetch
2.4.3-17	Topography Surrounding Diesel Generator Bldg and Cooling Towers
2.4.4-1	Watts Bar Dam Powerhouse & Spillway Results of Analysis for Operating Basis Earthquake
2.4.4-3	Spillway Gate Positions for 25 Year Flood 1/2 Probable Maximum Flood

LIST OF FIGURES

Number	Title
2.4.4-4	Powerhouse and Spillway Fort Loudoun Dam Results of Analysis for 1/2 SSE
2.4.4-5	Embankment Fort Loudoun Dam Results of Analysis for 1/2 SSE
2.4.4-6	Nonoverflow and Spillway Tellico Dam Results of Analysis Operating Basis Earthquake
2.4.4-7	Embankment Tellico Dam Results of Analysis for 1/2 SSE
2.4.4-8	Spillway and Nonoverflow Norris Dam Results of Analysis for 1/2 SSE
2.4.4-9	Norris Dam Analysis for 1/2 SSE and 1/2 Maximum Possible Flood
2.4.4-10	Spillway and Nonoverflow Cherokee Dam Results of Analysis for 1/2 SSE
2.4.4-11	Embankment Cherokee Dam Results of Analysis for 1/2 SSE
2.4.4-12	Cherokee Dam Assumed Condition of Dam After Failure - 1/2 SSE and 1/2 Maximum Possible Flood
2.4.4-13	Spillway and Overflow Douglas Dam Results of Analysis for 1/2 SSE
2.4.4-14	Saddle Dam No. 1 Douglas Dam Results of Analysis for 1/2 SSE
2.4.4-15	Douglas Dam Assumed Condition of Dam After Failure - 1/2 SSE and 1/2 Maximum Possible Flood

LIST OF FIGURES

Number	Title
2.4.4-16	Fontana Dam - Assumed Condition of Dam After 1/2 SEE and 1/2 Maximum Possible Flood
2.4.4-17	Fontana Project - Concrete Strengthening of Blks 33, 34, and 35
2.4.4-18	1/2 SSE with Epicenter Within Area Shown
2.4.4-21	Seismic Flood Analysis Fontana Plus Hiwassee System in 1/2 SSE - Sequoyah Plant
2.4.4-22	Deleted by Amendment 6
2.4.4-23	Deleted by Amendment 6
2.4.4-24	Spillway Fort Loudoun Dam Results of Analysis for SSE
2.4.4-25	Embankment Fort Loudoun Dam Results of Analysis for SSE
2.4.4-26	Fort Loudoun Dam Assumed Condition of Dam After Failure - SSE Combined With 25 Year Flood
2.4.4-27	Tellico Dam - Tellico Project Assumed Condition of Dam After Failure - SSE Combined with 25 Year Flood
2.4.4-28	SSE Plus 25 Year Flood, Judged Condition of Dam After Failure, Norris Dam
2.4.4-29	SSE With Epicenter in North Knoxville Vicinity
2.4.4-30	Flood Hydrographs
2.4.4-31	SSE With Epicenter in West Knoxville Vicinity

LIST OF FIGURES

Number	Title
2.4.4-37	General Plan, Elevation and Sections, Watts Bar
2.4.4-38	Topographic Map, General Area - Watts Bar Dam
2.4.4-39	Location, Plan and Section - Watts Bar
2.4.8-1	Grading Plan Intake Channel
2.4.13-1	Location of Wells and Springs Within 2 Mile Radius
2.4.13-2	Sequoyah Nuclear Plant Site Monitoring Well Locations and Generalized Water-Table Map
2.4A-5	Douglas PMF Failure Wave at Sequoyah Plant
2.5.1-1	Physiographic Map of Plant Area
2.5.1-2	Geologic and Tectonic Map of Plant Area
2.5.1-3	Geologic Investigations Geologic Map of Plant Site
2.5.1-4	Valley and Ridge Providence Seismic Reflection Profile
2.5.1-5	Geologic Sections W-30+00 through W-36+100

LIST OF FIGURES

Number	Title
2.5.1-6	Geologic Sections W-38+00, A-A and B-B
2.5.1-7	Geologic Sections N-68+00 through W-74+00
2.5.1-8	Geologic Sections N-76+00 through N-80+00
2.5.1-9	Foundation Treatment First Stage Grouting
2.5.1-10	Foundation Treatment Second Stage Grouting
2.5.1-11	Reactor Buildings No. 1 and 2 Area, Looking South
2.5.1-12	Excavation and Backfill - Category I Structures
2.5.1-12a	Excavation and Backfill - Category I Structures
2.5.1-12b	Excavation and Backfill - Category I Structures
2.5.1-13	Essential Soil Investigations In-Situ
2.5.1-13a	Essential Soil Investigations In-Situ
2.5.1-14	Standard Proctor Compaction Borrow Area
2.5.1-15	Standard Proctor Compaction Borrow Area
2.5.2-1	Location of Earthquake Epicenters
2.5.2-2	Map Showing the Extent of Earthquake Disturbances in the New Madrid Area in 1811-12
2.5.2-3	Isoseismals of the Charleston Earthquake
2.5.2-4	East Tennessee Earthquake of April 17, 1913
2.5.2-5	Earthquake of February 21, 1916
2.5.2-6	The Alabama Earthquake of October 18, 1916
2.5.2-7	Southern Appalachian Earthquake of October 1924
2.5.2-8	Appalachian Earthquake of November 2, 1928
2.5.2-9	Chattanooga Earthquake October 19, 1940

LIST OF FIGURES

Number	Title
2.5.2-10	East Tennessee Earthquake of July 13, 1969
2.5.2-11	Comparison of Response Spectra for Safe Shutdown Earthquake, ½% Damping
2.5.2-12	Comparison of Response Spectra for Safe Shutdown Earthquake, 1% Damping
2.5.2-13	Comparison of Response Spectra for Safe Shutdown Earthquake, 2% Damping
2.5.2-14	Comparison of Response Spectra for Safe Shutdown Earthquake, 5% Damping
2.5.5-1	Sequoyah Nuclear Plant - Diesel Generator Building - Time Settlement Curves
2.5.6-1	Diesel Generator Bldg - Sequoyah Nuclear Plant
2.5.6-2	Section of Forebay and Intake Slope Sequoyah Nuclear Plant Pumping Station

2.0 SITE CHARACTERISTICS

Chapter 2 provides information on the Sequoyah Nuclear Plant site, its environs and environment, and presents the results of studies that have been made to evaluate the physical characteristics of the site which influence the safety-related design bases of the plant.

The minimum exclusion and low population zone distances as defined by 10 CFR Part 100 are approximately 1825 feet and three miles respectively. The population center distance which is the distance to the nearest corporate limit of the city of Chattanooga, Tennessee, is approximately 7.5 miles southwest.

2.1 GEOGRAPHY AND DEMOGRAPHY

2.1.1 Site Location

The Sequoyah Nuclear Plant is located on a site near the geographical center of Hamilton County, Tennessee, on a peninsula on the western shore of Chickamauga Lake at Tennessee River mile (TRM) 484.5. The coordinates of the plant site are given in Table 2.1.1-1. Figure 2.1.1-1 shows the site in relation to other TVA projects. The Sequoyah site is approximately 7.5 miles northeast of the nearest city limit of Chattanooga, Tennessee, 14 miles west-northwest of Cleveland, Tennessee, and approximately 31 miles south-southwest of TVA's Watts Bar Nuclear Plant. Refer to Figure 2.1.1-2 for the regional features within 50 miles of the site.

2.1.2 Site Description

The Sequoyah Nuclear Plant site comprises approximately 525 acres (land above normal pool elevation of 683.0 ft MSL) which are owned, including mineral rights, by the United States and in the custody of TVA. A general plan of the plant layout is shown in Figure 2.1.2-1. The distance from the reactor building (containment) to the nearest point on the boundary of the exclusion area (minimum exclusion area distance) is approximately 1825 feet (556 meters). The site boundary is considered to be the boundary of the exclusion area.

2.1.2.1 Exclusion Area Control

There are no residences, commercial operations, or public recreational areas within the Sequoyah Nuclear Plant exclusion area boundary shown in Figure 2.1.2-2. The Sequoyah Training Center is within the TVA exclusion area and outside the security barrier. No public railroads or major highways penetrate the exclusion area boundary. Two rural county roads, Igou Ferry and Stonesage, penetrate the western boundary of TVA property and run adjacent to it for a short distance before leaving the site. Igou Ferry Road connects with Hixson Pike which follows the western shore of Chickamauga Lake and joins state route 153 just north of Chickamauga Dam. The plant access road crosses Igou Ferry Road at the exclusion area boundary and eventually connects with US Highway 27 near Soddy-Daisy, Tennessee. TVA has absolute authority for the exclusion of personnel and property within the exclusion area which includes marking of the

boundaries per 10 CFR 73. The control of personnel access to the exclusion area during emergencies is discussed in the Radiological Emergency Plan for the Sequoyah Nuclear Plant.

2.1.2.2 Boundaries for Establishing Effluent Release Limits

The effluent boundary (or unrestricted area boundary) is shown in Figure 2.1.2-2. The boundary of the Unrestricted Area (as defined in 10 CFR 20) is the same as the site boundary, but does not include the area over bodies of water. In accordance with the SQN Technical Specifications, limits for gaseous effluent releases are established for areas at or beyond the unrestricted area boundary using the methodology of the Offsite Dose Calculation Manual (ODCM). The distances from the plant to these areas are listed in Table 11.3.9-1 consistent with the ODCM. Routine releases of radioactivity meet the requirements of 10 CFR 20 and 10 CFR 50, Appendix I.

2.1.2.3 The Restricted Area

An area inside the exclusion area boundary is designated as the Restricted Area (as defined in 10 CFR 20). Access to this area is controlled for the purpose of protection of individuals from exposure to radiation and radioactive materials. The restricted area boundary can be adjusted, or temporary restricted areas established, as necessary, for the purpose of radiation protection.

2.1.3 Population and Population Distribution

Present and projected population information is contained in this section. Population data for 1985 are based on the Provisional Estimates of the Population of Counties, July 1, 1985. Population data for 1990 are based on the "1990 Census of Population" for Tennessee, North Carolina, Georgia, and Alabama. Projected population data are based on "County Projection to 2040" by the Regional Economic Analysis Division, Bureau of Economic Analysis, U.S. Department of Commerce, 1992. The allocation of county population into the various segments was based on a count of dwelling units from 1985 low-level aerial photography within ten miles of the site and census and 1:250,000 topographic maps for the remaining area.

2.1.3.1 Population Within 10 Miles

Population is distributed rather unevenly within 10 miles of the Sequoyah Nuclear Plant site. Over 50 percent of the 1990 population was in only seven sectors of the 5- to 10-mile range. These sectors are from S to and including NW (going clockwise around the compass). This concentration is a reflection of suburban Chattanooga and the town of Soddy-Daisy. Resident population in the remaining area is sparse and scattered with the exception of the 4-5 WSW annular segment. This pattern is projected to continue in the future with 55 percent of the total 2020 population being contained in this same portion of the 10-mile area. In addition, the 3-4 WSW annular segment is also projected for significant growth. The 0-10 mile population distributions for 1970 through 2020 are given in Tables 2.1.3-1 through 2.1.3-6a and are keyed to the various distances and directions shown on Figure 2.1.1-3.

2.1.3.2 Population Within 50 Miles

Although the site is located in southeastern Tennessee, the area within a 50-mile radius of the site encompasses portions of northwestern Georgia, northeastern Alabama, and a small portion of southwestern North Carolina.

The largest population concentration within 50 miles of the site is the city of Chattanooga, with a 1990 population of 152,466. The northernmost limits of the urbanization around Chattanooga are approximately four miles west-southwest of the plant site. Four smaller population centers (population of 10,000 to 50,000) are scattered around the area. The closest is Cleveland, Tennessee, about 13 miles east-southeast of the plant site with 1990 population of 30,354. In the 30- to 40-mile range are Dalton, Georgia, to the south-southeast (1990 population 21,761) and Athens, Tennessee, to the east-northeast (1990 population 12,054). McMinnville, Tennessee, with a 1990 population of 11,194, is 50 miles northwest of the plant site. In addition, the town of Soddy-Daisy (1990 pop. 8400) is located approximately 6 miles from the site. Development throughout the rest of the region consists primarily of smaller towns dispersed throughout low density rural development. Most of them serve as small retail or service centers for the surrounding farms, although a number are developing an industrial base. Tables 2.1.3-7 through 2.1.3-12a show the 0-50 mile population distributions for the year 1970 through 2020 for various distances and directions shown on Figure 2.1.1-2.

2.1.3.3 Low Population Zone

The low population zone distance as defined in 10 CFR Part 100 has been chosen to be three miles (4,828 meters). The population of this area (2,005 in 1970) and the population density (71 people per square mile in 1970) are both low. In addition, this area is of such size that in the unlikely event of a serious accident there is a reasonable probability that appropriate measures could be taken to protect the health and safety of the residents. Specific provisions for the protection of this area were considered in the development of the Sequoyah Nuclear Plant site emergency plan. The present and projected population figures for this area are included in Tables 2.1.3-1 through 2.1.3-6. Features of the area within the low population zone distances are shown on Figure 2.1.3-1.

2.1.3.4 Transient Population

Transient population within 10 miles of the plant is made up primarily of visitors to the various recreation facilities along the shoreline of the Chickamauga Reservoir. Figure 2.1.1-3 shows the location of the three primary public recreation facilities: Harrison Bay and Booker T. Washington State Parks and the Chester Frost County Park. In addition, there are many commercial marinas, group camps, and cottage developments as well as small formal and informal public access areas along the reservoir shoreline.

Peak hour attendance at these facilities was estimated by the TVA Recreation Resources Branch and is shown in Tables 2.1.3-11 through 2.1.3-16 for various distances and direction. The attendance at the major facilities is distributed to various segments according to where specific activities are located within the total park.

The transient population on the site is very limited. The Sequoyah Energy Connection is less than one mile southwest of the plant and it accommodates visitor groups of up to about 75. This visitation is not reflected in Tables 2.1.3-13 through 2.1.3-19.

2.1.3.5 Population Center

The nearest population center (as defined in 10 CFR Part 100) is Chattanooga, Tennessee, located as described previously.

2.1.3.6 Public Facilities and Institutions

Schools are the only public institutions containing significant population concentrations within 10 miles of the site. Their names, locations, and the 1990, 1993, 1997, and projected enrollments are contained in Table 2.1.3-20. To project enrollments, TVA consulted with the Hamilton County and Bradley County school officials.

2.1.4 Uses of Adjacent Lands and Waters

Land use in the vicinity of the proposed plant site can be examined best by dividing the area into four parts (see Figure 2.1.4-1): (1) the area west of Chickamauga Reservoir and north of the plant; (2) the area west of Chickamauga Reservoir, north of the city of Chattanooga, and southwest of the plant; (3) the area east of Chickamauga Reservoir and southeast of Harrison Bay and the Volunteer Army Ammunition Plant (VAA Plant); and (4) the area east of Chickamauga Reservoir and northeast of Harrison Bay and the VAA Plant.

Area No. 1

With the exception of the community of Soddy-Daisy, the area west of Chickamauga Reservoir and north of the site is sparsely settled. Development consists of scattered dwellings with some associated small-scale farming. Public access areas, campgrounds, boat docks, and an occasional small residential subdivision have been developed along the reservoir shoreline in scattered locations. The Soddy, Possum, and Sale Creek embayments are especially popular with fishermen and family boaters.

U.S. Highway 27 parallels the reservoir approximately five miles to the west. Soddy-Daisy, with a 1985 population of 8,400, is located along this highway about six miles from the plant.

This area is projected to experience a number of changes by the year 2010. One that was recently completed is the upgrade of U.S. 27 into a major north-south highway connecting northern Hamilton County with downtown Chattanooga. It has replaced the old two lane road and reduced commuting time significantly. Much more residential development is forecast for this area because of that, but not to the point that population densities will be significant. Contributing to the projected development are two other proposals. First is the provision of sewer to part of the area, which would increase both the rate and density of growth. Second is a proposed east-west road crossing the lake just north of the Sale Creek embayment. It would connect Cleveland with highways in Sequatchie County. If built, it would stimulate development along its route and a major concentration of commercial and high-density residential at its

intersection with U.S. 27 if the proposed sewers are built. Another significant proposed land use is an industrial park between the nuclear plant and Hixson Pike. It too is dependent on the provision of sewers. It would likely house light manufacturing plants.

Area No. 2

The area west of Chickamauga Reservoir between the Chattanooga city limits and the site has experienced considerable residential growth in the last few years. The area is characterized by considerable vacant land interspersed with high quality residential subdivisions. Much of the new residential development is concentrated between the Hixson and Dallas Hills communities and along the reservoir shoreline. Public recreation facilities are dominated by the 280-acre Chester Frost County Park (formerly Hamilton County Park) receiving over 250,000 visits annually. North Chickamauga Creek in the 9-10 mile range has been designated as a "greenway" with the development of trails and day use facilities near the mouth of the creek underway. Residential development is expected to advance steadily in this general area in the future because of the improvement to U.S. 27 discussed in Area 1. In summary, this area is considered a growth area in Hamilton County. As the population projections indicate, increases are expected throughout the area. In the past the tendency has been to concentrate along the reservoir shoreline. This trend is expected to continue; but, as the shoreline becomes developed, growth is expected to take place in the form of infilling throughout the entire area utilizing the now vacant land.

Area No. 3

Until 1977, when explosives production ceased, the VAA Plant had been a significant barrier to growth in this area because of environmental problems. Since then, residential development has picked up in the area, especially in the vicinity of the lake. There is also substantial commercial and light industrial use along State Highways 58 and 153. This pattern of growth is expected to continue within the natural limitation of the area, which is primarily poor soil for septic tank drain fields. In addition, a significant portion of the VAA site is being marketed for use as an industrial park, which should also increase the development in this area. Sewers are projected for this area, which would increase the rate and density of residential development. The primary recreation feature is the Booker T. Washington State Park, which had 393,000 visits in 1987.

Area No. 4

As in Area No. 3, much of this area also has been affected in the past by the VAA Plant, with residential development picking up in recent years. However, the basic character of the area is rural, with the exception of the Harrison Bay State Park in the two- to five-mile range along the eastern shoreline. In addition to numerous farms, there are scattered private cottages and houses in the vicinity of the park. Public campsites are also located at Skull Island and Grasshopper Creek Park.

From 7 to 10 miles in the vicinity of the city of Cleveland, residential subdivisions have concentrated along existing roads. Also, Interstate 75 is causing readjustments in development through the area.

At present, Area No. 4 is not a growth area for Chattanooga and sewers are not projected for most of the area. Therefore, due to the hilly terrain and poor soils for drain fields, future residential development is expected to be very low density. However, industrial development at the VAA plant, as mentioned previously, may have an impact in this area.

Hamilton and Bradley Counties, Tennessee, fall within a 10-mile radius of the Sequoyah site, having a total land area of approximately 555,000 acres with 159,359 acres of this in farms or about 29 percent of the total land area. On the 1,367 farms in this area, 87,465 acres were found to be used as cropland. A breakdown of the farm oriented land use for each county is given in Table 2.1.4-1. Table 2.1.4-2 tabulates yield and associated land area for various harvested crops. As of 11-1-88, the number of dairy cows within a 5-mile radius of the plant site was 69. In general, the land adjacent to the plant site is suitable dairying land. A land use census is conducted annually by TVA to locate the nearest milk producing animals. In 1988 all animals were cows.

A 1980 U.S. Forest Service survey of Tennessee indicates that approximately 51 percent of the land area in Bradley and Hamilton counties is forested and 49 percent is non-forested. These two counties contain 96,600 and 202,710 acres of forest respectively. Growing stock volume in the counties is estimated to be 335.3 million cubic feet, with 51.8 percent softwood and 48.2 percent hardwoods. The general extent and type of forest cover is shown in Figure 2.1.4-2.

Chickamauga Reservoir is one of a series of TVA multipurpose reservoirs located on the mainstream of the Tennessee River. The primary project uses are for flood control, navigation and hydropower generation, although extensive secondary uses including industrial and public water supply, commercial and sport fishing, recreation, and disposal of treated wastewater have also developed.

Chickamauga Reservoir, which extends from Chickamauga Dam (TRM 471.0) to Watts Bar Dam (TRM 529.9), has been classified by the Tennessee Division of Water Pollution Control for the following uses: municipal water supply, industrial water supply, fish and aquatic life, recreation, irrigation, livestock watering and wildlife, and navigation. The reservoir receives extensive use for these purposes.

The historic water quality and aquatic ecology conditions of Chickamauga Reservoir were described in the final Environmental Statement for Sequoyah Nuclear Plant Units 1 and 2, TVA, February 13, 1974. On July 26, 1974 TVA submitted a Standard Form C Application to the Environmental Protection Agency (EPA) for a National Pollutant Discharge Elimination System permit (NPDES) for the nonradiological discharges from Sequoyah Nuclear Plant. On June 4, 1979, TVA received NPDES permit No. TN0026450 from the EPA for the nonradiological component of the discharges from Sequoyah Nuclear Plant. This permit is updated as required to maintain permits for nonradiological discharges from Sequoyah Nuclear Plant. The permit includes appropriate provisions for the implementation and reporting of instream preoperational and operational monitoring programs in Chickamauga Reservoir with respect to water quality and aquatic ecology. As required by the permit, copies of these reports are also submitted to NRC. The reports of instream monitoring programs submitted under the NPDES permit, both past and future, contain updating information on the water quality and aquatic ecology of Chickamauga Reservoir. A separate updating and reporting of the aquatic conditions of Chickamauga Reservoir outside of the established framework of the NPDES permit requirements is neither planned or warranted in the FSAR.

TABLE 2.1.1-1

SEQUOYAH NUCLEAR PLANT

Coordinates of Unit 1 Reactor Building Centerline

Latitude 35° 13' 35.65"N
Longitude 85° 05' 28.17"W

Universal Transverse Mercator

N 3,899,640.62
E 673,718.24

Revised by Amendment 1

TABLE 2.1.3-1

1970 POPULATION DISTRIBUTION WITHIN TEN MILES OF SITE

		Miles from Site					
Direction	Total	0-1	1-2	2-3	3-4	4-5	5-10
N	890	-	15	50	10	5	810
NNE	545	-	-	60	85	45	355
NE	390	-	-	-	45	30	315
ENE	650	-	15	-	100	130	405
E	540	-	25	20	85	70	340
ESE	1,225	10	65	65	135	80	870
SE	965	5	190	25	85	85	575
SSE	1,275	-	35	115	335	105	685
S	2,570	-	80	5	190	265	1,030
SSW	3,425	-	55	55	205	115	2,995
SW	2,535	-	-	45	175	45	2,270
WSW	6,475	5	65	335	650	615	4,805
W	3,430	5	35	115	275	200	2,800
WNW	3,030	-	25	145	405	285	2,170
NW	3,965	10	40	185	210	200	3,320
NNW	1,235	10	80	15	40	145	945
Total	32,145	45	725	1,235	3,030	2,420	24,690

TABLE 2.1.3-2

1980 POPULATION DISTRIBUTION WITHIN TEN MILES OF SITE

		Miles from Site					
Direction	Total	0-1	1-2	2-3	3-4	4-5	5-10
N	730	-	15	40	10	5	660
NNE	440	-	-	50	65	40	285
NE	315	-	-	-	40	25	250
ENE	555	-	15	-	80	105	355
E	505	-	20	15	70	55	345
ESE	1,195	10	50	50	110	65	910
SE	900	5	155	20	70	70	580
SSE	1,045	-	25	95	270	85	570
S	1,275	-	65	5	155	215	835
SSW	2,785	-	45	45	170	95	2,430
SW	2,860	-	-	40	140	35	2,645
WSW	6,785	5	50	270	530	500	5,430
W	3,845	5	30	95	220	180	3,315
WNW	3,385	-	20	120	325	375	2,545
NW	4,930	10	35	150	165	220	4,350
NNW	1,160	10	60	10	35	160	885
Total	32,710	45	585	1,005	2,455	2,230	26,390

TABLE 2.1.3-3

1985 POPULATION DISTRIBUTION WITHIN TEN MILES OF SITE

		Miles from Site					
Direction	Total	0-1	1-2	2-3	3-4	4-5	5-10
N	2,045	20	41	175	76	62	1,671
NNE	870	0	30	73	136	62	573
NE	746	0	0	67	67	54	558
ENE	1,114	0	11	24	172	210	697
E	1,186	0	70	11	191	137	777
ESE	2,084	0	118	113	194	137	1,522
SE	1,186	0	129	272	118	152	1,165
SSE	3,171	0	73	320	500	430	1,848
S	3,494	0	67	143	229	547	2,508
SSW	5,878	0	32	81	288	116	5,361
SW	6,575	0	10	236	435	122	5,772
WSW	13,676	20	146	495	866	1,113	11,036
W	4,397	10	20	180	506	530	3,151
WNW	3,462	10	30	281	461	461	2,219
NW	3,142	50	80	225	438	259	2,090
NNW	2,038	10	202	80	71	171	1,504
Total	55,714	120	1,059	2,776	4,744	4,563	42,452

TABLE 2.1.3-4

1990 POPULATION DISTRIBUTION WITHIN TEN MILES OF SITE

		Miles from Site					
Direction	Total	0-1	1-2	2-3	3-4	4-5	5-10
N	2,195	28	52	212	85	65	1,753
NNE	1,036	0	36	88	160	75	677
NE	901	0	0	81	82	65	673
ENE	1,419	0	13	29	209	255	913
E	1,485	0	85	13	232	166	989
ESE	2,754	0	143	137	235	166	2,073
SE	2,469	0	157	329	143	187	1,653
SSE	3,719	0	88	388	607	516	2,120
S	3,658	0	82	173	277	663	2,463
SSW	7,471	0	39	98	349	140	6,845
SW	6,517	0	12	323	475	141	5,566
WSW	15,895	24	208	697	1,341	1,435	12,190
W	5,245	8	32	259	739	771	3,436
WNW	4,205	4	35	413	640	539	2,574
NW	3,802	67	118	318	625	312	2,362
NNW	2,460	4	290	114	74	214	1,764
Total	65,231	135	1,390	3,672	6,273	5,710	48,051

TABLE 2.1.3-5

2000 POPULATION DISTRIBUTION WITHIN TEN MILES OF SITE

		Miles from Site					
Direction	Total	0-1	1-2	2-3	3-4	4-5	5-10
N	2,289	29	54	221	89	68	1,828
NNE	1,080	0	38	92	167	78	706
NE	940	0	0	84	86	68	702
ENE	1,480	0	14	30	218	266	952
E	1,549	0	89	14	242	173	1,031
ESE	2,872	0	149	143	245	173	2,162
SE	2,575	0	164	343	149	195	1,724
SSE	3,878	0	92	405	633	538	2,211
S	3,814	0	86	180	289	691	2,568
SSW	7,791	0	41	102	364	146	7,138
SW	6,796	0	13	337	495	147	5,804
WSW	16,575	25	217	727	1,398	1,496	12,711
W	5,469	8	33	270	771	804	3,583
WNW	4,385	4	36	431	667	562	2,684
NW	3,965	70	123	332	652	325	2,463
NNW	2,565	4	302	119	77	223	1,839
Total	68,021	141	1,449	3,829	6,541	5,954	50,106

TABLE 2.1.3-6

2010 POPULATION DISTRIBUTION WITHIN TEN MILES OF SITE

		Miles from Site					
Direction	Total	0-1	1-2	2-3	3-4	4-5	5-10
N	2,360	30	56	228	91	70	1,885
NNE	1,114	0	39	95	172	81	728
NE	969	0	0	87	88	70	724
ENE	1,526	0	14	31	225	274	982
E	1,597	0	91	14	249	179	1,064
ESE	2,962	0	154	147	253	179	2,229
SE	2,655	0	169	354	154	201	1,778
SSE	3,999	0	95	417	653	555	2,280
S	3,934	0	88	186	298	713	2,649
SSW	8,034	0	42	105	375	151	7,361
SW	7,008	0	13	347	511	152	5,985
WSW	17,093	26	224	750	1,442	1,543	13,109
W	5,640	9	34	279	795	829	3,695
WNW	4,522	4	38	444	688	580	2,768
NW	4,089	72	127	342	672	336	2,540
NNW	2,645	4	312	123	80	230	1,897
Total	70,147	145	1,495	3,949	6,746	6,140	51,672

TABLE 2.1.3-6a

2010 POPULATION DISTRIBUTION WITHIN TEN MILES OF SITE

		Miles from Site					
Direction	Total	0-1	1-2	2-3	3-4	4-5	5-10
N	2,418	31	57	234	94	72	1,931
NNE	1,141	0	40	97	176	83	746
NE	993	0	0	89	90	72	741
ENE	1,563	0	14	32	230	281	1,006
E	1,636	0	94	14	256	183	1,090
ESE	3,034	0	158	151	259	183	2,284
SE	2,720	0	173	362	158	206	1,821
SSE	4,097	0	97	427	669	568	2,335
S	4,030	0	90	191	305	730	2,713
SSW	8,230	0	43	108	384	154	7,541
SW	7,179	0	13	356	523	155	6,132
WSW	17,511	26	229	768	1,477	1,581	13,429
W	5,778	9	35	285	814	849	3,785
WNW	4,632	4	39	455	705	594	2,836
NW	4,188	74	130	350	689	344	2,602
NNW	2,710	4	319	126	82	236	1,943
Total	71,861	149	1,531	4,045	6,911	6,290	52,935

TABLE 2.1.3-7

1970 POPULATION DISTRIBUTION WITHIN FIFTY MILES OF SITE

Direction	Total	Miles from Site 0-10	10-20	20-30	30-40	40-50
N	14,550	890	3,425	1,860	2,570	5,805
NNE	19,970	545	6,055	3,915	4,685	4,770
NE	22,025	390	1,210	2,830	7,600	9,995
ENE	41,510	650	3,770	5,425	21,405	10,260
E	19,690	540	9,995	3,285	1,835	4,035
ESE	43,600	1,225	26,685	3,250	1,055	11,385
SE	13,265	965	4,960	3,135	1,845	2,360
SSE	48,495	1,275	6,075	8,590	29,210	3,345
S	47,810	1,570	9,840	9,785	19,000	7,615
SSW	137,590	3,425	79,150	34,630	13,825	6,560
SW	146,185	2,535	104,960	25,950	7,495	5,245
WSW	48,275	6,475	19,655	4,455	9,345	8,345
W	17,075	3,430	1,490	4,660	3,785	3,710
WNW	14,545	3,030	2,390	3,135	4,080	1,910
NW	14,320	3,965	980	1,365	725	7,285
NNW	10,110	1,235	540	2,780	1,545	4,010
Total	659,015	32,145	281,180	119,050	130,005	96,635

TABLE 2.1.3-8

1980 POPULATION DISTRIBUTION WITHIN FIFTY MILES OF SITE

		Miles from Site				
Direction	Total	0-10	10-20	20-30	30-40	40-50
N	15,605	730	3,560	2,030	2,535	6,750
NNE	20,805	440	6,485	4,120	4,705	5,055
NE	23,270	315	1,230	2,860	7,615	11,250
ENE	46,035	555	3,900	6,200	24,740	10,640
E	21,920	505	11,930	3,380	2,005	4,100
ESE	51,760	1,195	34,815	3,350	1,075	11,325
SE	15,040	900	6,835	3,140	1,795	2,370
SSE	56,420	1,045	6,840	9,005	36,080	3,450
S	51,060	1,275	9,565	9,895	22,290	8,035
SSW	156,825	2,785	90,575	42,330	14,695	6,440
SW	162,260	2,860	115,955	29,725	8,655	5,065
WSW	54,975	6,785	23,310	4,595	11,440	8,845
W	17,480	3,845	1,470	4,820	3,705	3,640
WNW	14,875	3,385	2,645	3,160	3,835	1,850
NW	17,880	4,930	1,050	1,460	765	9,675
NNW	10,060	1,160	510	2,725	1,555	4,110
Total	736,270	32,710	320,675	132,795	147,490	102,600

TABLE 2.1.3-9

1985 POPULATION DISTRIBUTION WITHIN FIFTY MILES OF SITE

		Miles from Site				
Direction	Total	0-10	10-20	20-30	30-40	40-50
N	21,308	2,045	4,922	3,190	2,310	8,841
NNE	31,222	870	9,507	4,365	7,350	9,130
NE	29,466	746	2,175	5,524	5,573	15,448
ENE	52,493	1,114	3,942	4,881	26,393	16,163
E	29,712	1,186	14,581	5,761	4,534	3,650
ESE	60,518	2,084	39,948	4,272	1,745	12,469
SE	27,161	1,836	4,977	4,548	12,881	2,919
SSE	63,290	3,171	10,711	7,829	31,660	9,920
S	70,268	3,494	20,067	18,800	17,723	10,184
SSW	159,215	5,878	84,597	42,513	16,248	9,979
SW	143,916	6,575	98,057	20,998	8,179	10,108
WSW	63,676	13,676	24,026	3,551	13,269	9,155
W	23,283	4,397	1,355	5,560	4,963	7,008
WNW	20,291	3,462	4,915	4,070	5,688	2,156
NW	21,140	3,142	1,230	1,490	1,096	14,182
NNW	12,847	2,038	445	2,910	2,515	4,939
Total	829,804	55,714	325,453	140,260	162,127	146,250

TABLE 2.1.3-10

1990 POPULATION DISTRIBUTION WITHIN FIFTY MILES OF SITE

		Miles from Site				
Direction	Total	0-10	10-20	20-30	30-40	40-50
N	21,471	2,195	4,390	2,665	2,641	9,580
NNE	31,190	1,036	9,280	4,399	7,206	9,269
NE	29,749	901	2,390	5,916	5,308	15,234
ENE	55,722	1,419	7,461	4,897	25,698	16,247
E	33,376	1,485	18,584	5,296	4,526	3,485
ESE	53,443	2,754	32,802	4,305	1,734	11,848
SE	23,655	2,469	5,659	6,099	3,970	5,458
SSE	76,949	3,719	10,496	10,471	41,756	10,507
S	93,648	3,658	38,376	21,859	20,136	9,619
SSW	163,242	7,472	87,613	40,958	16,818	10,381
SW	98,030	6,515	55,198	17,609	8,997	9,711
WSW	85,592	15,889	44,979	3,524	13,109	8,092
W	25,078	5,247	2,616	5,546	5,059	6,611
WNW	19,124	4,204	3,611	3,445	5,677	2,188
NW	22,599	3,802	1,801	2,015	1,164	13,817
NNW	14,273	2,460	839	3,055	2,646	5,274
Total	847,142	65,225	326,093	142,060	166,445	147,318

TABLE 2.1.3-11

2000 POPULATION DISTRIBUTION WITHIN FIFTY MILES OF SITE

		Miles from Site				
Direction	Total	0-10	10-20	20-30	30-40	40-50
N	23,320	2,201	4,954	2,856	2,860	10,450
NNE	34,058	1,036	10,595	4,679	7,667	10,081
NE	31,899	902	2,668	6,265	5,634	16,430
ENE	60,379	1,421	8,578	5,245	27,527	17,607
E	36,433	1,485	20,674	5,688	4,846	3,740
ESE	58,292	2,754	36,514	4,626	1,842	12,556
SE	26,081	2,469	6,314	6,775	4,414	6,108
SSE	85,780	3,719	11,818	11,774	46,792	11,678
S	103,675	3,658	42,248	24,566	22,584	10,618
SSW	178,503	7,472	96,253	45,246	18,356	11,176
SW	106,520	6,839	60,896	19,168	9,589	10,028
WSW	92,896	17,190	49,314	3,870	14,280	8,242
W	27,248	5,715	2,885	6,088	5,426	7,134
WNW	20,522	4,500	3,917	3,699	6,034	2,372
NW	24,507	4,144	1,960	2,176	1,222	15,004
NNW	15,114	2,515	966	3,286	2,802	5,546
Total	925,225	68,021	360,554	156,007	181,874	158,769

TABLE 2.1.3-12

2010 POPULATION DISTRIBUTION WITHIN FIFTY MILES OF SITE

		Miles from Site				
Direction	Total	0-10	10-20	20-30	30-40	40-50
N	24,711	2,206	5,385	3,009	3,028	11,082
NNE	36,232	1,036	11,600	4,893	8,022	10,681
NE	33,460	903	2,859	6,495	5,855	17,349
ENE	63,886	1,422	9,431	5,499	28,862	18,672
E	38,743	1,485	22,276	5,972	5,080	3,930
ESE	61,927	2,754	39,360	4,859	1,918	13,036
SE	27,870	2,469	6,817	7,270	4,729	6,585
SSE	92,224	3,719	12,806	12,726	50,436	12,537
S	111,202	3,658	45,208	26,632	24,354	11,350
SSW	189,612	7,472	102,822	48,274	19,331	11,713
SW	112,822	7,086	65,232	20,223	9,973	10,308
WSW	98,545	18,178	52,615	4,139	15,197	8,415
W	28,884	6,071	3,089	6,509	5,698	7,517
WNW	21,522	4,726	4,126	3,875	6,288	2,508
NW	25,933	4,405	2,074	2,295	1,261	15,899
NNW	15,780	2,557	1,064	3,475	2,925	5,759
Total	983,353	70,147	386,764	166,147	192,954	167,341

TABLE 2.1.3-12a

2020 POPULATION DISTRIBUTION WITHIN FIFTY MILES OF SITE

		Miles from Site				
Direction	Total	0-10	10-20	20-30	30-40	40-50
N	25,824	2,210	5,737	3,119	3,154	11,605
NNE	38,021	1,036	12,425	5,073	8,318	11,170
NE	34,872	904	3,050	6,738	6,077	18,103
ENE	66,776	1,424	10,096	5,719	30,013	19,524
E	40,611	1,485	23,516	6,229	5,286	4,094
ESE	64,776	2,754	41,562	5,071	1,991	13,398
SE	29,079	2,469	7,206	7,596	4,910	6,898
SSE	96,099	3,719	13,494	13,290	52,566	13,030
S	116,275	3,658	47,531	27,909	25,402	11,775
SSW	197,551	7,472	107,951	50,169	19,934	12,025
SW	117,867	7,284	68,724	20,954	10,250	10,654
WSW	103,157	18,975	55,273	4,337	15,894	8,678
W	30,194	6,358	3,249	6,820	5,914	7,852
WNW	22,333	4,908	4,292	4,020	6,499	2,614
NW	27,075	4,615	2,162	2,383	1,311	16,605
NNW	16,353	2,591	1,140	3,602	3,034	5,987
Total	1,026,862	71,861	407,408	173,028	200,554	174,010

TABLE 2.1.3-13

1970 ESTIMATED PEAK HOUR RECREATION VISITS WITHIN TEN MILES OF SITE

Direction	Total	Miles from Site 0-1	1-2	2-3	3-4	4-5	5-10
N	465	0	0	35	30	20	380
NNE	270	0	0	110	10	20	130
NE	20	0	20	0	0	0	0
ENE	130	0	130	0	0	0	0
E	30	0	30	0	0	0	0
ESE	10	5	10	0	0	0	0
SE	15	0	15	0	0	0	0
SSE	475	0	35	0	0	210	230
S	755	10	105	0	0	10	630
SSW	1,210	0	10	160	210	280	550
SW	1,655	0	50	155	305	870	275
WSW	10	0	0	0	10	0	0
W	0	0	0	0	0	0	0
WNW	0	0	0	0	0	0	0
NW	0	0	0	0	0	0	0
NNW	195	0	0	0	40	155	0
Total	5,240	10	405	460	605	1,565	2,195

TABLE 2.1.3-14

1980 ESTIMATED PEAK HOUR RECREATION VISITS WITHIN TEN MILES OF SITE

		Miles from Site					
Direction	Total	0-1	1-2	2-3	3-4	4-5	5-10
N	593	0	0	43	40	25	485
NNE	346	0	0	140	13	25	168
NE	25	0	25	0	0	0	0
ENE	165	0	165	0	0	0	0
E	40	0	40	0	0	0	0
ESE	15	0	15	0	0	0	0
SE	20	0	20	0	0	0	0
SSE	608	0	45	0	0	270	293
S	964	13	135	0	0	13	803
SSW	1,541	0	13	205	270	358	695
SW	2,124	0	65	201	390	1,118	350
WSW	13	0	0	0	13	0	0
W	330	330	0	0	0	0	0
WNW	0	0	0	0	0	0	0
NW	0	0	0	0	0	0	0
NNW	249	0	0	0	51	198	0
Total	7033	343	523	589	777	2,007	2,794

TABLE 2.1.3-15

1985 ESTIMATED PEAK HOUR RECREATION VISITS WITHIN TEN MILES OF SITE

		Miles from Site					
Direction	Total	0-1	1-2	2-3	3-4	4-5	5-10
N	453	0	0	0	0	35	418
NNE	217	0	0	3	0	3	211
NE	87	0	87	0	0	0	0
ENE	5	0	5	0	0	0	0
E	45	0	45	0	0	0	0
ESE	0	0	0	0	0	0	0
SE	124	0	124	0	0	0	0
SSE	8	0	0	0	0	0	8
S	731	0	73	0	0	328	330
SSW	2,502	0	147	206	276	213	1,660
SW	1,918	0	38	5	237	935	703
WSW	265	0	0	265	0	0	0
W	0	0	0	0	0	0	0
WNW	0	0	0	0	0	0	0
NW	4	0	0	0	0	4	0
NNW	269	0	0	45	98	126	0
Total	6,628	0	519	524	611	1,644	3,330

TABLE 2.1.3-16

1990 ESTIMATED PEAK HOUR RECREATION VISITS WITHIN TEN MILES OF SITE

		Miles from Site					
Direction	Total	0-1	1-2	2-3	3-4	4-5	5-10
N	1,439	0	0	0	0	80	1,359
NNE	150	0	0	75	0	75	0
NE	412	0	412	0	0	0	0
ENE	87	0	87	0	0	0	0
E	46	0	46	0	0	0	0
ESE	0	0	0	0	0	0	0
SE	128	0	128	0	0	0	0
SSE	87	0	0	0	0	0	87
S	749	0	75	0	0	336	338
SSW	4,066	0	151	212	1,375	219	2,109
SW	3,637	0	468	512	243	1,140	1,274
WSW	272	0	0	272	0	0	0
W	0	0	0	0	0	0	0
WNW	0	0	0	0	0	0	0
NW	87	0	0	0	0	87	0
NNW	277	0	0	46	101	130	0
Total	11,437	0	1,367	1,117	1,719	2,067	5,167

TABLE 2.1.3-17

2000 ESTIMATED PEAK HOUR RECREATION VISITS WITHIN TEN MILES OF SITE

		Miles from Site					
Direction	Total	0-1	1-2	2-3	3-4	4-5	5-10
N	1,571	0	0	0	0	87	1,484
NNE	401	0	0	82	0	82	237
NE	450	0	450	0	0	0	0
ENE	95	0	95	0	0	0	0
E	50	0	50	0	0	0	0
ESE	0	0	0	0	0	0	0
SE	140	0	140	0	0	0	0
SSE	95	0	0	0	0	0	95
S	818	0	82	0	0	367	369
SSW	4,441	0	165	232	1,502	239	2,303
SW	3,971	0	511	559	265	1,245	1,391
WSW	297	0	0	297	0	0	0
W	0	0	0	0	0	0	0
WNW	0	0	0	0	0	0	0
NW	95	0	0	0	0	95	0
NNW	302	0	0	50	110	142	0
Total	12,726	0	1,493	1,220	1,877	2,257	5,879

TABLE 2.1.3-18

2010 ESTIMATED PEAK HOUR RECREATION VISITS WITHIN TEN MILES OF SITE

		Miles from Site					
Direction	Total	0-1	1-2	2-3	3-4	4-5	5-10
N	1,672	0	0	0	0	93	1,579
NNE	426	0	0	87	0	87	252
NE	479	0	479	0	0	0	0
ENE	101	0	101	0	0	0	0
E	53	0	53	0	0	0	0
ESE	0	0	0	0	0	0	0
SE	149	0	149	0	0	0	0
SSE	101	0	0	0	0	0	101
S	870	0	87	0	0	390	393
SSW	4,725	0	176	247	1,598	254	2,450
SW	4,226	0	544	595	282	1,325	1,480
WSW	316	0	0	316	0	0	0
W	0	0	0	0	0	0	0
WNW	0	0	0	0	0	0	0
NW	101	0	0	0	0	101	0
NNW	321	0	0	53	117	151	0
Total	13,540	0	1,589	1,298	1,997	2,401	6,255

TABLE 2.1.3-19

2020 ESTIMATED PEAK HOUR RECREATION VISITS WITHIN TEN MILES OF SITES

Direction	Total	Miles from Site 0-1	1-2	2-3	3-4	4-5	5-10
N	1,752	0	0	0	0	97	1,655
NNE	446	0	0	91	0	91	264
NE	502	0	502	0	0	0	0
ENE	106	0	106	0	0	0	0
E	56	0	56	0	0	0	0
ESE	0	0	0	0	0	0	0
SE	156	0	156	0	0	0	0
SSE	106	0	0	0	0	0	106
S	912	0	91	0	0	409	412
SSW	4,954	0	184	259	1,675	267	2,569
SW	4,431	0	570	624	296	1,389	1,552
WSW	331	0	0	331	0	0	0
W	0	0	0	0	0	0	0
WNW	0	0	0	0	0	0	0
NW	0	0	0	0	0	5	0
NNW	179	0	0	56	123	152	0
Total	13,931	0	1,665	1,361	2,094	2,253	6,558

TABLE 2.1.3-20

EDUCATIONAL INSTITUTIONS IN VICINITY OF SEQUOYAH NUCLEAR PLANT
1990-2020

School	Location	1990	1993	1997	2000	2010	2020
Harrison Bay Vocational School	3-4 SE	473	400	401	434	462	485
McConnel Elementary School	3-4 WSW	836	895	751	855	909	954
Loftis Middle School	3-4 WSW			839	910	1000	1100
John Allen Elementary School	3-4 W	227	309	368	390	400	420
Snowhill Elementary School	4-5 SE	831	655	651	650	650	650
Big Ridge Elementary School	4-5 SW	851	720	569	600	700	800
Soddy-Daisy Elementary School	4-5 W	756	640	400	413	439	461
Soddy-Daisy High School	4-5 W	1580	1510	1607	1687	1800	2000
Daisy Elementary	4-5 W	----	176	509	560	610	700
Sequoyah Vocational Center	4-5 W	600	600	635	650	700	770
McDonald Elementary School (Bradley County)	5-10 SE	175	161	Closed	----	----	----
Ooltewah High School	5-10 SSE	1561	1450	1569	1710	1880	2000
Wallace A. Smith Elementary School	5-10 S	496	614	670	695	770	847
Brown Junior High School	5-10 SSW	755	814	433	486	550	605
Central High School	5-10 SSW	1218	1046	1077	1176	1252	1313
Harrison Elementary School	5-10 SSW	809	563	583	866	922	967
Hixson High School	5-10 SW	1323	895	1130	1384	1473	1544
Falling Water Elementary School	5-10 WSW	259	220	326	330	340	357
Ganns-Middle Valley School	5-10 WSW	780	622	449	500	600	720
Mowbray Elementary School	5-10 WNW	98	74	Closed	----	----	----
Soddy-Daisy Middle School*	5-10 WNW	808	825	1607	1700	1870	2000
Soddy Elementary School	5-10 W	573	535	400	440	484	540
	Total:	15,009	13,724	14,974	16,416	17,811	19,233

*Name change--formerly Soddy-Daisy Junior High School

TABLES 2.1.4-1

FARM ORIENTED LAND USE

LAND AND LAND IN FARMS

County	Approximate Land in Area	Land in Farms	Proportion in Farms
	----------Ac----------		-----pct----
Bradley	210,000	94,364	45.0
Hamilton	345,000	64,995	18.8

NUMBER AND AVERAGE SIZE OF FARM

County	All Farms	Average Size of Farm
	--no.--	----Ac----
Bradley	754	125
Hamilton	613	106

LAND IN FARMS ACCORDING TO USE

County	Cropland	Woodland Including Woodland Pasture	All Other Land	Irrigated Land
	----------Ac----------			
Bradley	53,488	28,497	12,379	633
Hamilton	33,977	23,364	7,654	1,021

CROPLAND

County	Harvested Cropland	Cropland Used for Pasture	All Other Cropland
	----------Ac----------		
Bradley	20,477	31,382	1,629
Hamilton	13,159	18,919	1,919

Source: 1982 Census of Agriculture

TABLES 2.1.4-2

CROPS HARVESTED

	Bradley County		Hamilton County	
	Yield	Acres	Yield	Acres
Field corn bu/Ac	77	1,482	71	1,057
Sorghum bu/Ac	-	-	63	45
Wheat bu/Ac	37	896	26	1,414
All other small grain	N/A	291	N/A	-
Soybeans bu/Ac	34	1,005	22	2,026
Hay tons/Ac	1.8	15,661	1.6	8,596
Cotton bales/Ac	-	-	-	-
Peanuts lbs/Ac	-	-	-	-
Tobacco lbs/Ac	1,826	81	1,885	7
Vegetable, sweet corn, or melon	N/A	50	N/A	87
Irish and sweet potatoes	N/A	5	N/A	5
Berries	N/A	10	N/A	-
Land in orchards	N/A	311	N/A	147
Other crops	N/A	685	N/A	-

Source: 1982 Census of Agriculture

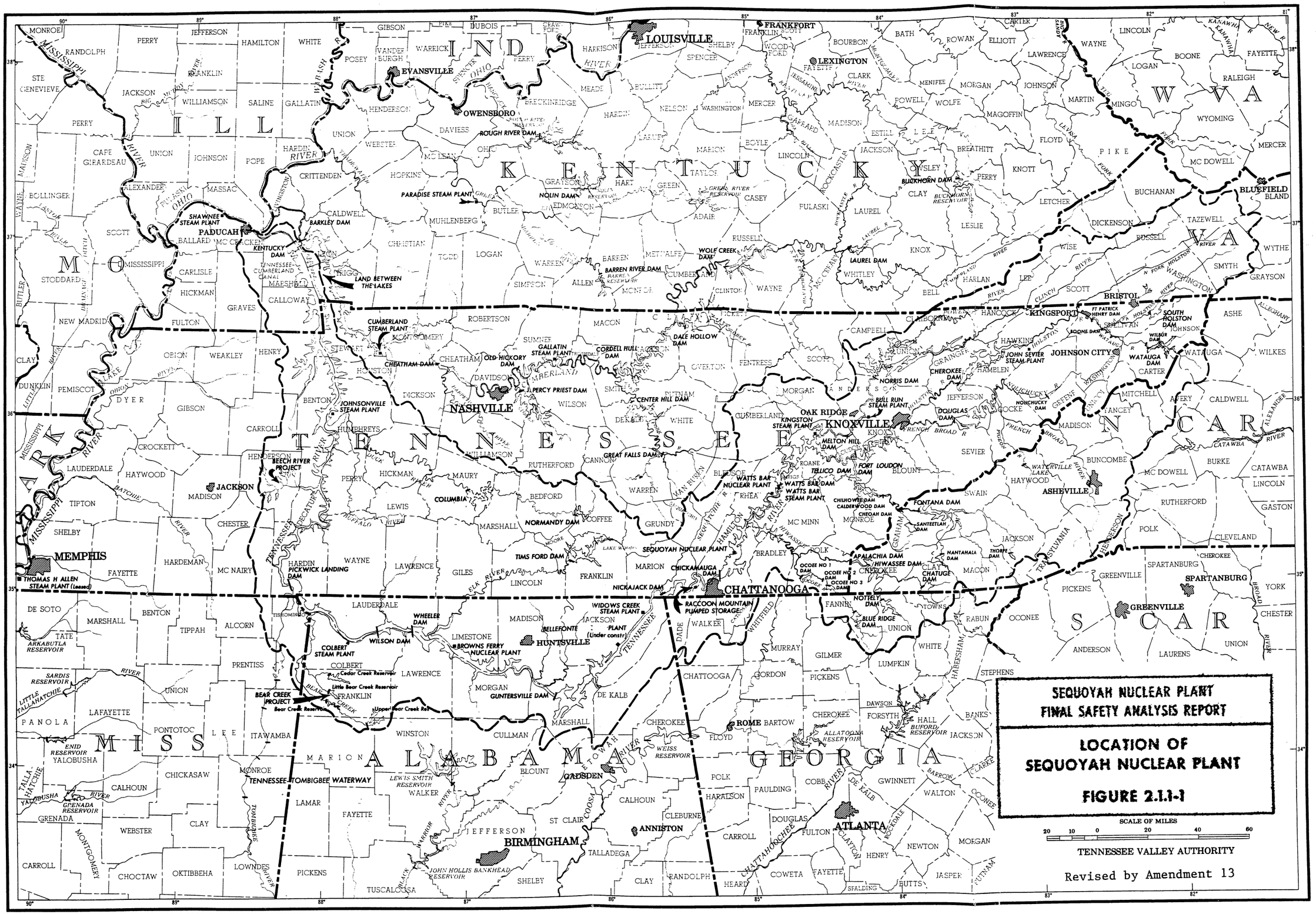

BASE MAP MATERIALS PREPARED BY AND AVAILABLE FROM MAPPING SERVICES BRANCH.

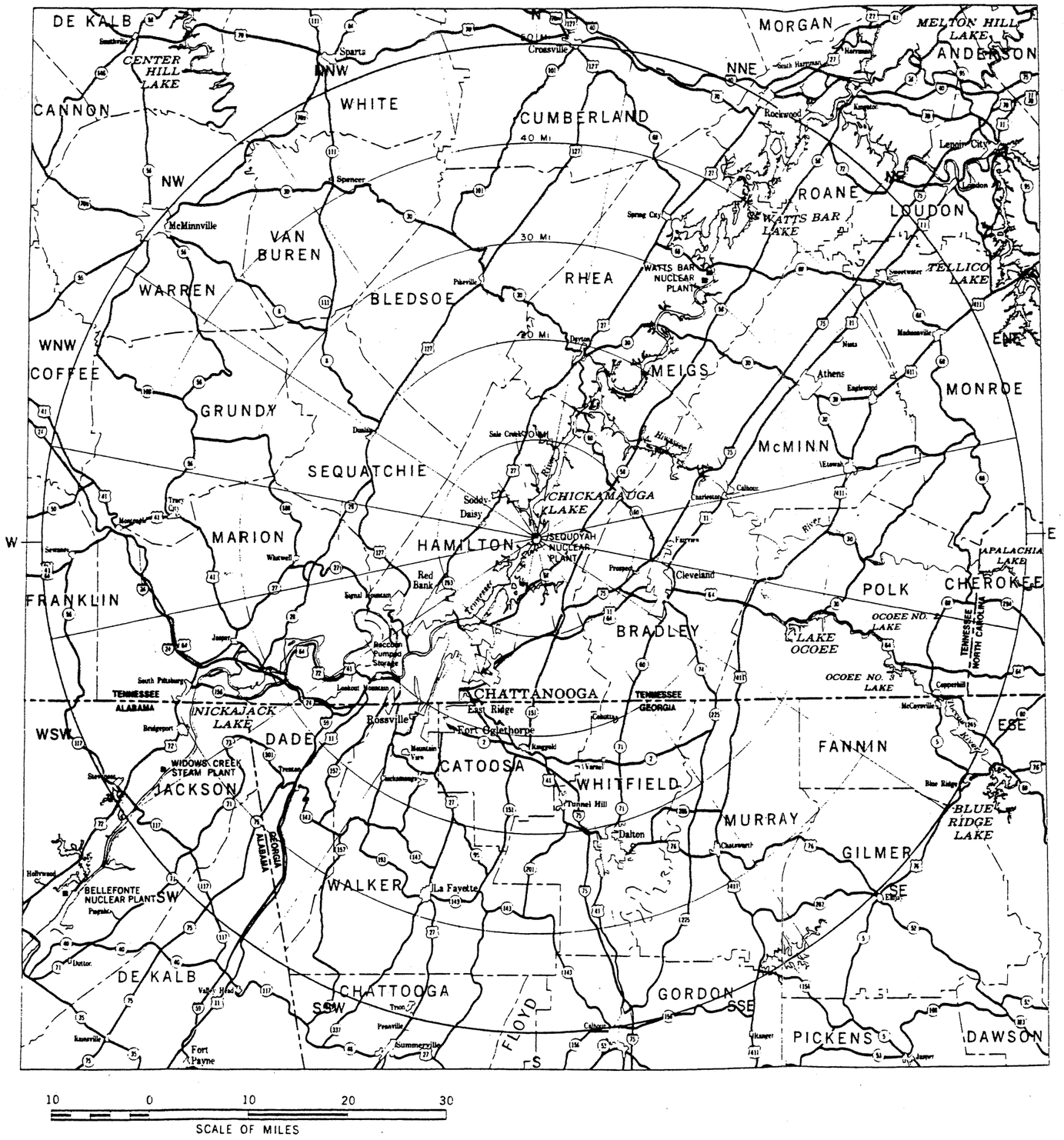

SEQUOYAH NUCLEAR PLANT
FINAL SAFETY ANALYSIS REPORT

FEATURES WITHIN 50 MILES
FIGURE 2.1.1-2

1 0 1 2 3 4

SCALE OF MILES

SEQUOYAH NUCLEAR PLANT
FINAL SAFETY ANALYSIS REPORT

FEATURES WITHIN 10 MILES
FIGURE 2.1.1-3

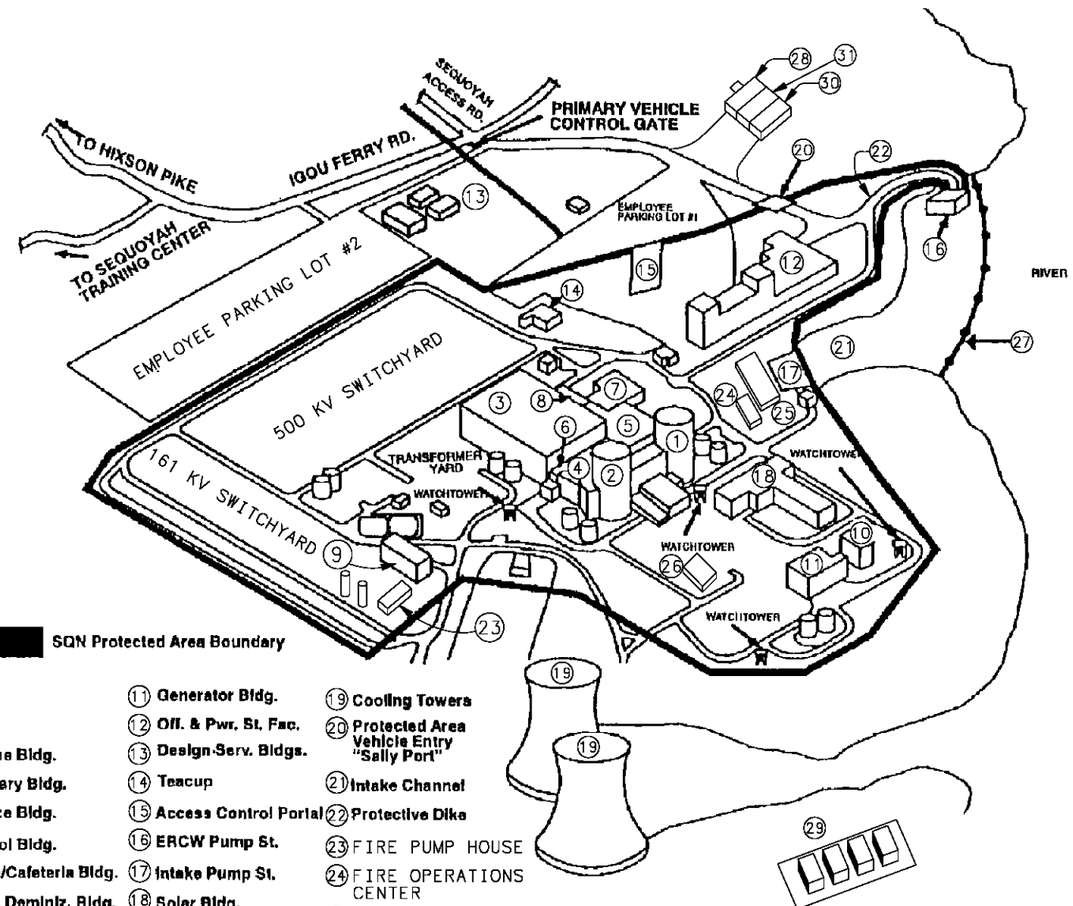

SQN Protected Area Boundary

1. Unit 1
2. Unit 2
3. Turbine Bldg.
4. Auxiliary Bldg.
5. Service Bldg.
6. Control Bldg.
7. Office/Cafeteria Bldg.
8. Cond. Deminiz. Bldg.
9. Make-Up Wtr.
10. Add. Diesel Gen. Bldg
11. Generator Bldg.
12. Off. & Pwr. St. Fac.
13. Design-Serv. Bldgs.
14. Teacup
15. Access Control Portal
16. ERCW Pump St.
17. Intake Pump St.
18. Solar Bldg.
19. Cooling Towers
20. Protected Area Vehicle Entry "Sally Port"
21. Intake Channel
22. Protective Dike
23. FIRE PUMP HOUSE
24. FIRE OPERATIONS CENTER
25. MULTI-PURPOSE BUILDING
26. INDEPENDENT SPENT FUEL STORAGE INSTALLATION (ISFSI)
27. SKIMMER WALL
28. UNIT 1 OLD STEAM GENERATOR STORAGE FACILITY (OSGSF)
29. LOW LEVEL RAD WASTE FACILITY
30. UNIT 2 OLD STEAM GENERATOR STORAGE FACILITY (OSGSF)
31. FLEX EQUIPMENT STORAGE BUILDING (FESB)

SEQUOYAH NUCLEAR PLANT
FINAL SAFETY
ANALYSIS REPORT

FIGURE 2.1.2-1
GENERAL SITE PLAN

(REVISED BY AMENDMENT 26)

CAD MAINTAINED DRAWING

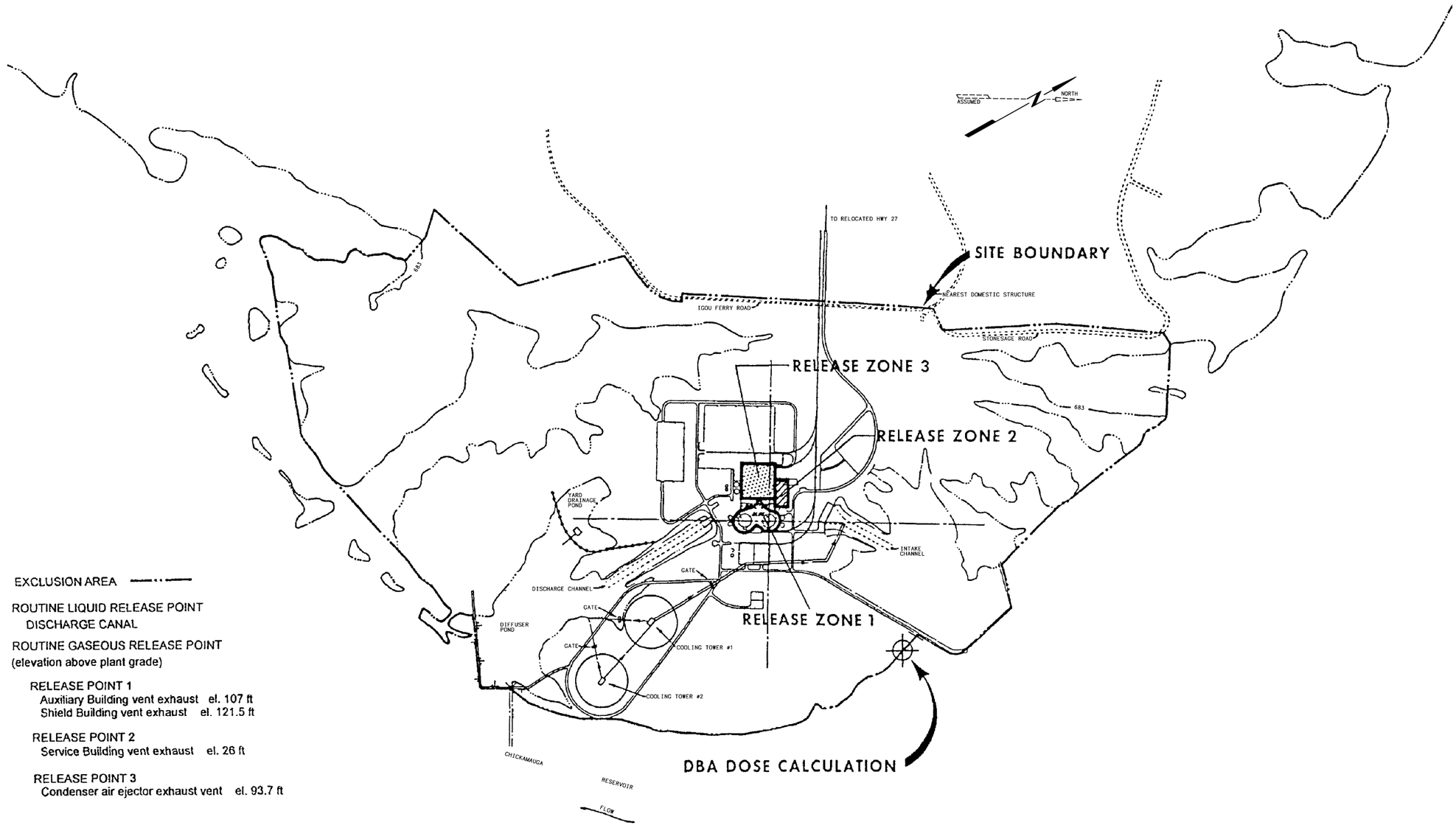

EXCLUSION AREA

ROUTINE LIQUID RELEASE POINT
DISCHARGE CANAL

ROUTINE GASEOUS RELEASE POINT
(elevation above plant grade)

RELEASE POINT 1
Auxiliary Building vent exhaust el. 107 ft
Shield Building vent exhaust el. 121.5 ft

RELEASE POINT 2
Service Building vent exhaust el. 26 ft

RELEASE POINT 3
Condenser air ejector exhaust vent el. 93.7 ft

SEQUOYAH NUCLEAR PLANT
FINAL SAFETY
ANALYSIS REPORT

FIGURE 2.1.2-2
SITE BOUNDARY

(REVISED BY AMENDMENT 20)

CAD MAINTAINED DRAWING

Best Available Historical Image

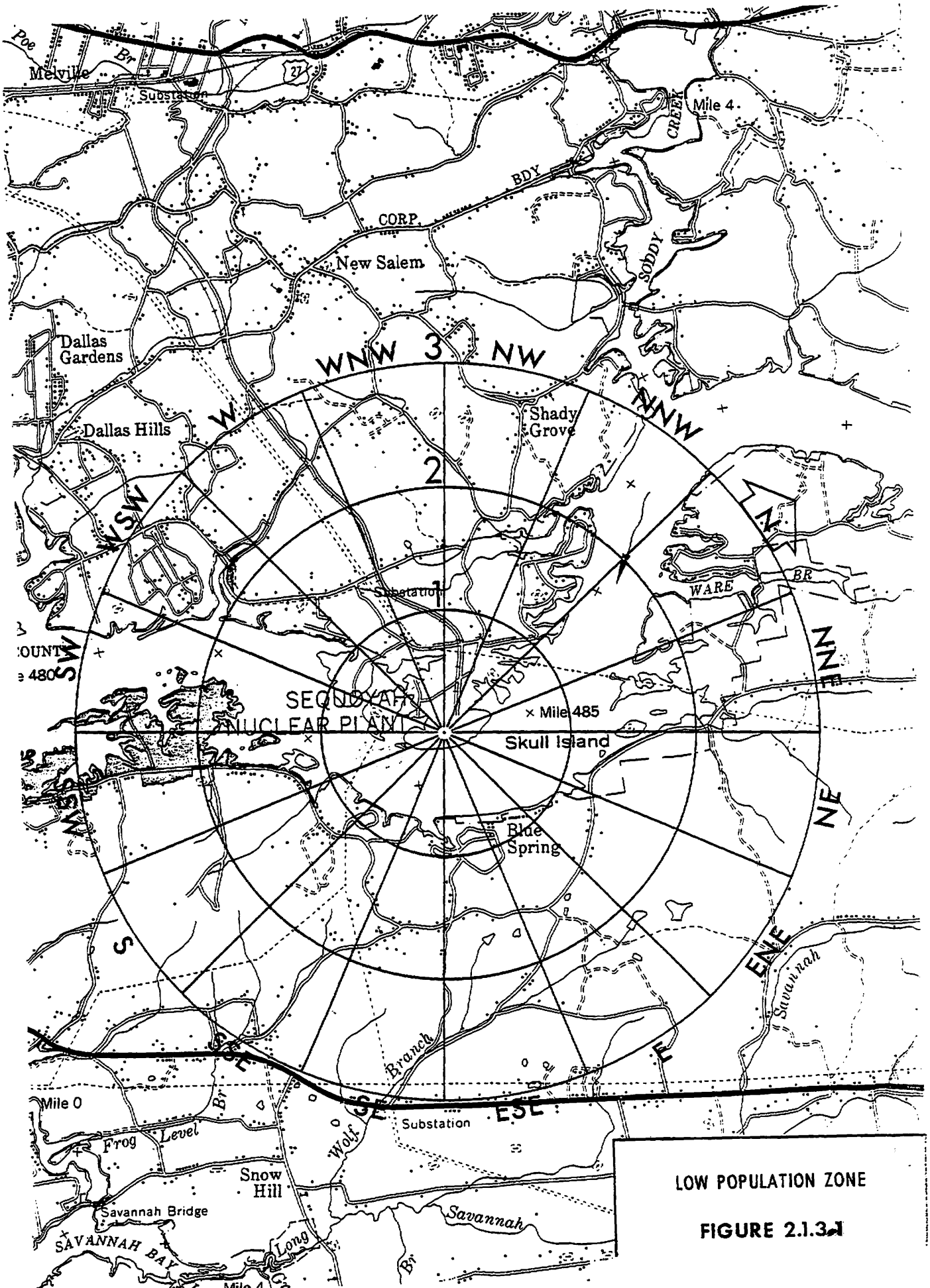

LOW POPULATION ZONE

FIGURE 2.1.3-1

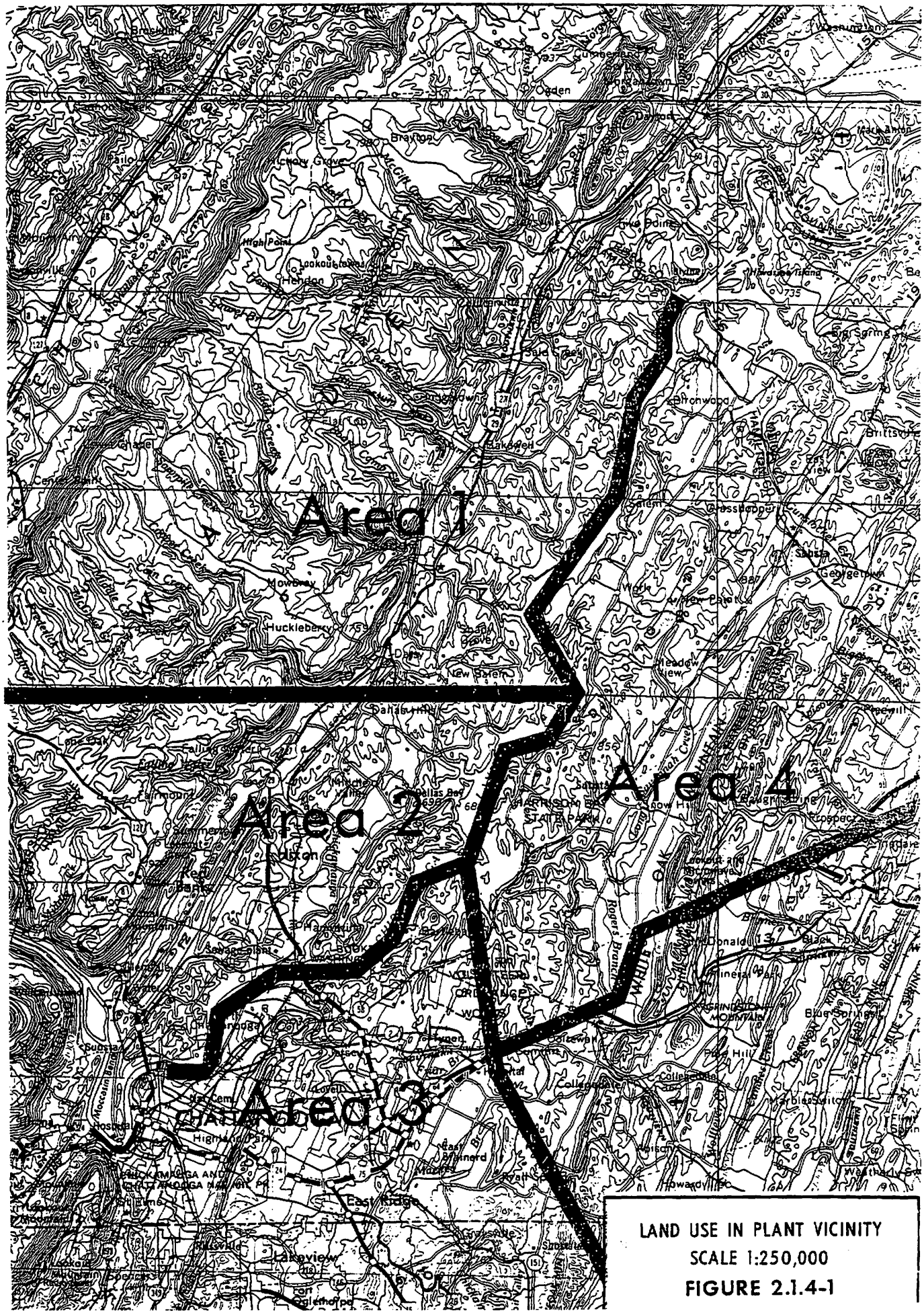

LAND USE IN PLANT VICINITY
SCALE 1:250,000
FIGURE 2.1.4-1

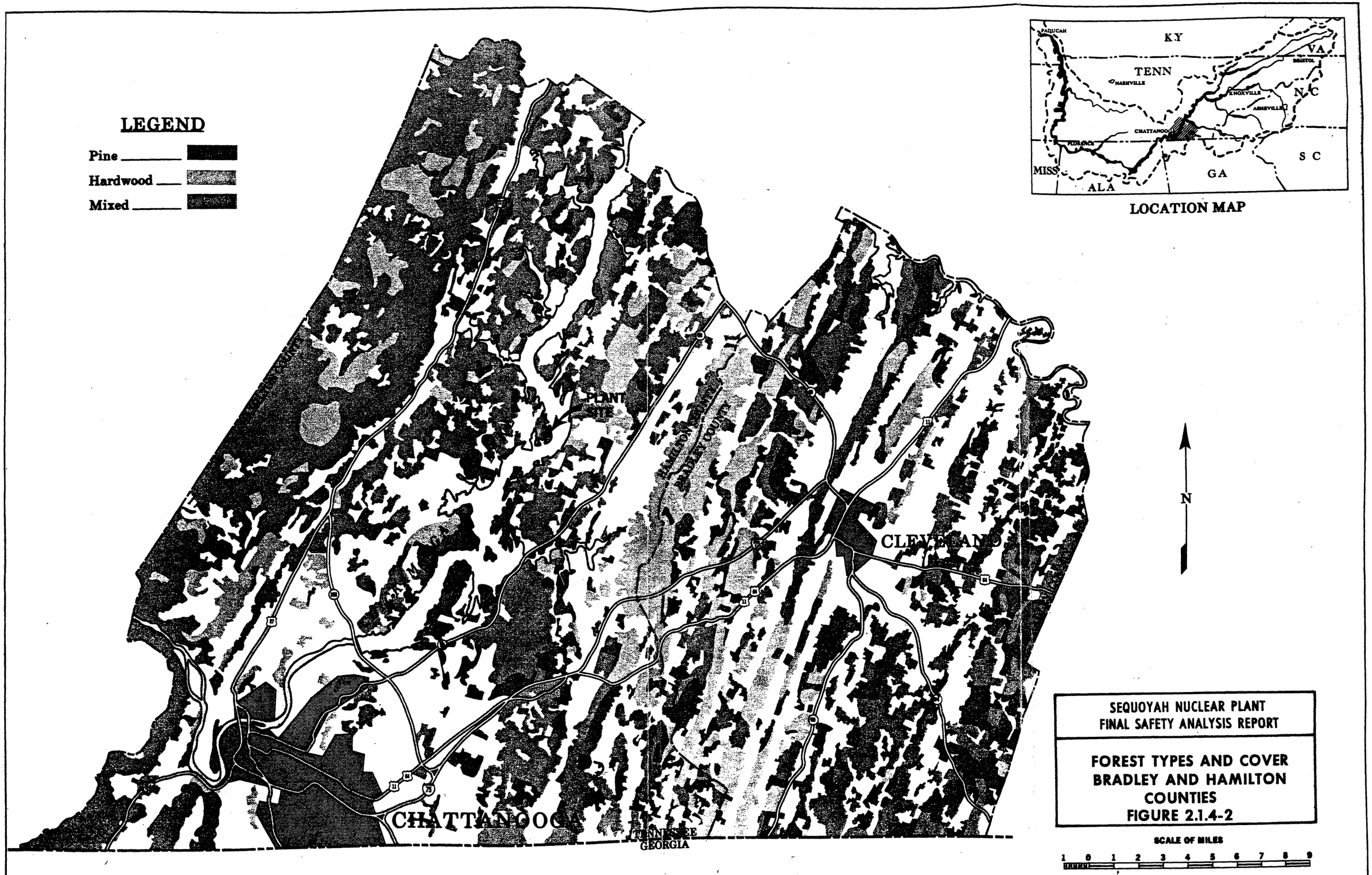

SEQUOYAH NUCLEAR PLANT
FINAL SAFETY ANALYSIS REPORT

FOREST TYPES AND COVER
BRADLEY AND HAMILTON
COUNTIES
FIGURE 2.1.4-2

2.2 NEARBY INDUSTRIAL, TRANSPORTATION, AND MILITARY FACILITIES

There are no industrial or military facilities within five miles of the Sequoyah Nuclear Plant site which would potentially pose a hazard to the safe operation of the plant. A discussion of the highway network in the vicinity of the plant site is contained in Section 2.1. Facilities of interest beyond five miles include the Volunteer Army Ammunition (VAA) Plant and the Dallas Bay Sky Park. Also, Federal Airway V333 passes directly over the site, and Chickamauga Lake is a commercially navigable waterway. The Chattanooga Airport is located approximately 14.5 miles from the plant site. These are the only facilities of potential significance to the safe operation of the plant, and based on the evaluations set forth below, these activities will pose no hazard.

2.2.1 Location and Routes

Chickamauga Lake is a navigable waterway used by both commercial and recreational traffic. Through a series of locks and dams, commercial traffic can travel from Knoxville, upstream of the site to the mouth of the Tennessee River at the Ohio River.

The Dallas Bay Sky Park is a general aviation airport located about 5.5 miles WSW of the plant. The Chattanooga Airport is a full-service commercial airport located about 14.5 miles SSW of the plant.

The nearest boundary of the VAA Plant is about eight miles from the plant site. Figure 2.1.1-3 shows this relationship. The plant is in a stand-by mode and has not produced explosives since 1977. It is not expected to resume production unless there would be a national emergency. However, a small amount of munitions is stored on the site and shipped to and from the site by truck. There are no specific restrictions on the routes to be taken by trucks that would keep them away from the nuclear plant. Barges have never been used for shipping and they are not expected to be used in the future. Rail cars have been used in the past for explosives when the plant was in production but are not expected to be used in the future unless production resumes. (The nearest mainline railroad is about five and one-half miles west of the nuclear plant.) Also, the VAA plant currently contracts its facility to Raytheon Company, which utilizes the plant for final assembly of two air-to-ground missiles: The IR Maverick Missile and the SM-2 Standard Missile. The missiles are shipped to and from the site by truck. Trucks leaving the VAA follow Bonnie Oaks Drive to I-75 and proceed either North or South. West bound shipments exit onto I-24 West.

2.2.2 Description of Products

Up to 44 training operations per day take place at the Dallas Bay Sky Park with an average of about 25. Many of them involve low-altitude maneuvers in the general vicinity of the plant.

Air traffic on or near Federal Airway V333 on the most recent peak traffic day at the Chattanooga Airport was 42. This includes both IFR (Instrument Flight Rules) and VFR (Visual Flight Rules) flights. They ranged in altitude from 2,000 to 15,000 feet. The type of aircraft which utilize Federal Airway V333 include: Cessna 152; Cessna 425; BA-31; DC-9; MD-80; Boeing 727; K-10; F-28; C-130; SW-3; BE-100; BE-200; and BE-90.

The data were for an 18 hour period on July 21, 1992, and reflect the peak traffic for the area of responsibility of the airport, not necessarily V333. Traffic during the six undocumented hours is likely to be very small.

Air traffic at the Chattanooga Airport averages about 140 incoming flights per day. Under certain wind conditions, an estimated 35 - 40 percent will make an approach that takes them over or near the plant at an elevation of about 2500 feet above the ground.

The SM-2 Standard Missile contains 285 pounds net explosive weight and is transported 18 to a truck. The IR Maverick Missile contains 362 pounds net explosive weight and is shipped 36 to a truck. The small munitions are stored in two magazines each designed to store 500,000 pounds of TNT. Table 2.2.2-1b shows the type of munitions stored on site; the typical amount stored on site; and the typical amount transported by truck. There is no set schedule for the shipment of the munitions.

Table 2.2.2-1 shows the total amount of certain hazardous materials shipped past the Sequoyah Nuclear Plant from 1982 to 1992 on a yearly basis based on Corps of Engineers lock data. The product listed as gasoline on the table is actually RU250. In addition, data on chlorine shipments became available starting in 1990. Table 2.2.2-1a contains 1990 shipping data from a TVA survey of dock operators.

Based on 1992 shipping data, chlorine is shipped at a rate of about one 1,100 ton barge every ten days; RU250 (gasoline) is no longer shipped; residual fuel oil is shipped at a rate of one three-barge tow every three months with about 1,500 tons per barge; and asphalt is shipped at a rate of about three barges per month with two 1,500-ton barges and one 3,000-ton barge. Variations in total yearly shipments occur by adjusting any or all of the three variables--shipping frequency, number of barges per tow, and barge size.

2.2.3 Evaluations

2.2.3.1 Evaluation of Explosion Hazards from Nearby Transportation Routes

As indicated in Tables 2.2.3-1 and 2.2.3-2, certain hazardous materials are transported by river barge past the Sequoyah Nuclear Plant site. In addition, explosive materials are also transported over nearby railroad lines. Therefore, these materials were evaluated for their potential to damage the safety related structures of the plant. The materials include TNT, gasoline, liquid natural gas (LNG) and unspecified fertilizers.

Table 1736 of AMCH-385-224 requires that 500,000 lb of TNT (maximum transported by rail) be stored at least 5,400 feet from any unbarricaded, inhabited building and that 400,000 lb of TNT be stored at least 2,550 feet from such building. These distances are much less than the nearest railroad (29,000 feet) or highway (39,000 feet) to Sequoyah over which large amounts of explosives can be transported. Thus, there is no potential for damage to the Sequoyah plant due to the transport of TNT from or storage of TNT at the VAA Plant.

Table 2.2.3-3 indicates the amount of gasoline shipped past the Sequoyah site over the past 15 years. The gasoline supply for Knoxville is provided by pipeline. As of 1974 with the pipeline in

full operation no future gasoline barge shipments past the Sequoyah site are expected except in case of an emergency. The potential for damage to the Sequoyah plant from a gasoline barge explosion is considered to be negligible.

In response to concerns raised by the ACRS, the possibility of a barge explosion in the vicinity of the new ERCW pumping station has been reviewed. Our response is as follows:

(1) The ACRS identified liquid natural gas (LNG) as a substance to be considered in an exploding barge scenario. From our review of the barge shipments past Sequoyah for calendar year 1978, there were no shipments of LNG on the Tennessee River. It should be noted that barge shipments of LNG past Sequoyah are not likely since natural gas transportation is handled almost entirely by pipeline in this region. Therefore, we do not consider the potential for an exploding LNG barge near the new ERCW pumping station to be a credible event.

(2) As indicated in Table 2.2.3-2, there were, in calendar year 1978, shipments of unspecified fertilizers past the Sequoyah Nuclear Plant. Hence, the possibility of an accidental explosion must be considered.

In 1966, the U.S. Bureau of Mines issued a study entitled "Explosion Hazards of Ammonium Nitrate Under Fire Exposure," which examined the deflagration and detonation hazards associated with Ammonium Nitrate (AN). The study indicates:

(a) Ordinary fertilizer-grade AN requires strong overpressures to initiate detonation within the mixture.

(b) AN and AN-fuel mixtures were exposed to fire with no transition from deflagration to detonation being observed.

(c) A combination of fire and overpressure results in transition to detonation. However, in free-flowing beds of AN and AN-fuel mixtures, pressures as high as 8000 lb/in^2 did not generate detonation. Only in experiments where the AN was not allowed to flow freely was transition to detonation observed in the AN-fuel mixture at pressures above 1000 lb/in^2, but not with pure AN.

(d) It was found that hot AN (under fire exposure) readily detonated when impacted with a high velocity projectile or shock wave. Explosions in storage and shipments of AN have apparently resulted only when nearby explosions or structure collapse have occurred concurrent with fire in the AN.

(e) Gas detonations have been shown incapable of initiating detonation in AN mixtures. In general, fertilizers shipped on the Tennessee River employ diatomaceous earth and kaolin clay for anticaking dusts rather than using oil sealant, thus detonations are possible only in cargoes where fire and missiles or external detonation are present. Most bulk fertilizers with earth or clay mixtures will not burn without mixing a considerable amount of paper or flammable material into the fertilizer.

Based on the insensitivity to detonation exhibited by most common fertilizers, the unlikely sequence of events required for detonation must include: Barge collision, fire in the fertilizer cargo, and concurrent detonation or missile-inducing event. Therefore, given the low probability of a barge collision and the low percentage of fertilizer shipments on the Tennessee River, it is concluded that, because of the very low probabilities associated with the event, no hazard exists to the intake pumping station from the transportation of fertilizers by barge on the Tennessee River system.

2.2.3.2 Evaluation of Barge Impact with the ERCW Intake Structure

The collision of a tow with the ERCW intake pumping station is considered to be an unlikely event. The intake structure is protected by location from collision with river traffic heading downstream for water surfaces up to elevation 705, which is 22 feet above maximum normal pool level and 15 feet above a flood condition equivalent to one-half the probable maximum flood. The probability per year of a collision with a drifting barge heading downstream is conservatively estimated to be 4.4×10^{-8}. The probability of a collision involving a tow heading upstream has been determined to be 1.6×10^{-5}/year. These probabilities were calculated using the event tree techniques (Reference 1) as described below and are believed to be conservative.

Collision With River Traffic Heading Downstream

1. Probability of reaching or exceeding flood level 705. Because of the existence of an upstream protective dike with a top elevation of 700.0 as shown in Figure 2.1.2-1 the flood level has to be 705.0 or higher in order for a river vessel to go over the top of the dike and subsequently collide with the intake structure. The probability of a water surface reaching or exceeding flood level 705 is 4×10^{-6} in any given year.

2. Probability of random hit. The probability that a barge drifts, on a collision course, toward the intake structure depends on the relative sizes of river width and intake structure. Probability of random hit equals structure size divided by river width: $P=67/6000 = 1.1 \times 10^{-2}$. The width of the river at the plant site, based on a flood level of 705, was estimated conservatively from Figure 2.4.1-1. The length of the upstream exterior wall of the intake structure was used as the structure size in the computation.

3. Other considerations.

   a. Mechanics of river flow. The Sequoyah Nuclear Plant is located on the convex bank of the river. According to flow theory and actual observations made on various rivers (Reference 2), surface-drifting subjects will never be able to reach the vicinity of the intake structure. Water particles in a bend have a "transverse circulation"; particles near the surface move toward the concave bank and those at the bottom move toward the convex bank. Since the transverse circulation of water particles and the direction of the bend are related by the laws of fluid dynamics, the reversal of the direction of the transverse circulation is a condition almost impossible to exist.

   b. Correlation between flood occurrence and river vessel release. Occurrence of a flood does not necessarily result in the release of a river vessel, and for any given level the probability of release is always less than one.

c. Probability of river vessel arrival. Even if a certain flood level were reached and a river vessel were released, the river vessel might not be able to arrive at the immediate upstream station of the intake structure due to the fluctuation of the flood level and the irregularity of the bank formation.

If only the probability of reaching flood level 705 and the probability of random hit are accounted for, the collision probability is then the product of the probabilities of the two individual events, yielding a probability of 4.4×10^{-8} collisions/year.

This procedure is conservative because the consideration of river flow mechanics and chance of release and arrival of river vessel are not included in the computation. Therefore, river traffic-intake structure collision at the Sequoyah Nuclear Plant site is considered to be incredible.

Collision With River Traffic Heading Upstream

Tow operators on the Tennessee River have been required to be licensed by the U.S. Coast Guard since 1972. A requirement for this license is that they must abide by the Western Rivers Rules of the Road. These rules provide that only tows having radar may proceed during inclement weather while those not having radar must tie up. The U.S. Coast Guard has stated that the type of shoreline and mooring cells in the vicinity of Sequoyah Nuclear Plant afford excellent weather protection. The plant is located between Tennessee River Mile (TRM) 484 and 485; first class safety harbors are located near TRM 483 and 489. The Coast Guard has further stated that the present channel markings are more than sufficient for a prudent navigator. The pumping station is well outside the navigation channel (approximately 300 feet from the boundary) and a daymarker and light is located on the far side of the channel directly opposite the plant to guide upstream traffic away from the plant.

Sequoyah Nuclear Plant is located on the convex bank of a bend in the Tennessee River Channel. Upstream tows attempting to cut short the navigation of the bend would have a difficult angle of approach to the pumping station. As addressed in the discussion for traffic heading downstream, tows losing power in the bend and drifting will drift toward the shoreline opposite the intake structure.

The probability of 1.6×10^{-5} collisions/year was obtained using the following information. The calculation is believed to be conservative.

1. Data available for the years 1945-1979 was searched for barge groundings on the Chickamauga Reservoir. Of the 10 groundings found, 7 were not applicable because of grounding during inclement weather before 1972 or because of intentional grounding caused by loss of power. A range of 40.35 miles (40.35 x 5280 x 2 feet) of shoreline and a total of 19,674 tows during these years were involved. This yields a probability of grounding per tow per foot of shoreline on the reservoir of 3.6×10^{-10}.

2. The target length of the intake structure susceptibility was conservatively taken as 200 feet. (The intake structure is 118 feet by 67 feet.) The average number of tows heading upstream past the intake structure during 1974 to 1979 was approximately 225 per year. The number of tows on the Chickamauga Reservoir reached a peak in 1970, but has been

roughly uniform during 1974 to 1979 and is believed to be a good indication of the expected number of tows for the next several years. The probability is therefore calculated as 3.6×10^{-10} groundings per tow per foot of shoreline x 200 feet of shoreline x 225 tows per year = 1.6×10^{-5} collisions/year.

An evaluation of the navigation capabilities and requirements for navigation through this section of the river, mile 484 to 485, was conducted. This evaluation provides a strong qualitative rationale that the expected rate of occurrence of an upstream barge impact on the ERCW pumping station is very unlikely compared to the random probability of a tow grounding.

TVA is confident that the real expected rate of occurrence of barge impact on the ERCW is far less than the calculated value of 1.6×10^{-5} events per year. TVA's understanding of the inadequately documented events has led to the belief that the calculated random probability of hitting a portside bank (tow traveling upstream) at the Sequoyah river location is conservative. The rationale for this belief is discussed below.

Discussions with the U.S. Coast Guard revealed the following information about the potential for a barge tow to accidentally collide (direct impact or otherwise) with the ERCW pumping station.

The certified barge tug pilot primarily navigates in the traditional "river-pilot" manner, which is by (1) experience, (2) line of sight to landmarks, (3) U.S. Corps of Engineers chart (updated annually), and (4) the Coast Guard Western Rules of the Road. However, the modern (1981) river tug pilot is generally equipped with depth finders (sonar fathomometers), range finding radars, electronics to define water and wind vectors, 2-way radio, and electronic status indication of operational systems. The development and upgrade of modern navigational aids, as well as a more reliable propulsion system, ensures an increasingly accurate, effective navigation of the river by barge pilots.

In all weather, the position, without electronic aids, is known to less than 200 feet, and with navigational electronics, to less than 50 feet. On Chickamauga Reservoir, in the traverse by the Sequoyah Nuclear Plant, the position is very well defined because there are buoys every 0.2 mile on the port and starboard sides (a total of 14); there are five navigation lights; the river and riverbank topography is unusually distinctive; and there are distinctive landmarks (the Sequoyah cooling towers and power transmission lines). The radar equipped boat uses the transmission lines as the primary position locator. A river pilot going upstream by Sequoyah will choose to go on the starboard side because of courtesy (Western Rules of the Road) and because of the need to efficiently and safely navigate an "s" curve through this traverse.

The upstream barge is surprisingly maneuverable. A barge can make a 180° change in course without emergency measures in about twice the length of tow (i.e., within 400 to 800 feet). An upstream barge can make a 90° controlled turn in less than 0.2 mile under typical conditions, i.e., current (2-1/2 knots), wind (10 knots), and power (single screw). If a tug loses propulsion in upstream traverse, he still has effective steerage for 1/4-1/2 mile (approximately 3-6 minutes, worst case). The pilot can make emergency stops by slipping an anchor or a spud. An upstream barge can easily be piloted to hit a target area 90° to port or starboard within 25 feet under bad conditions and within 5 feet under good conditions. Therefore, a certified river pilot, even in extremis (defined as 'must take emergency measures to avoid trouble or to ground his

tow'), can and would avoid the ERCW. The ERCW is a significant structure, which is well marked and lighted as a navigation hazard. In extremis, a pilot will select the best course of action from an economic and safety standpoint. And, in a traverse by the Sequoyah ERCW, he will most likely attempt a grounding on an underwater shoal to his starboard side (the Denny Bluff Shoal).

The river barge pilot is a U.S. Coast Guard certified pilot, whose license is renewed annually and who has periodic physical and proficiency examinations. If a pilot is suspected of malfeasance, a suspension and relocation proceeding is conducted. No cases of malfeasance or of reported drunkenness have occurred on the north Tennessee River in the last five years.

2.2.3.3 Evaluation of Hazards from Air Traffic

Traffic along Federal Airway V333 is so slight and passes at such an altitude (4000 feet minimum) so as to pose no hazard.

2.2.3.4 Evaluation of the Accidental Release of Toxic Gases from Onsite Storage Facilities

Main control room habitability during a postulated hazardous chemical release at or near the plant has been evaluated (reference 3). This evaluation utilizes the approach outlined in Regulatory Guide 1.78 and concludes that the main control room habitability is not jeopardized by accidental release of chemicals stored on site. In addition, plant procedures maintain a list of these hazardous materials, their storage facilities, and quantities they are stored in.

2.2.3.5 Evaluation of the Accidental Release of Toxic Gases from Offsite Storage Facilities

There are no industrial or military facilities where large quantities of toxic chemicals could be stored within a 5-mile radius of the plant.

2.2.3.6 Evaluation of the Upstream Release of Corrosive Liquids or Oils on the ERCW Intake Structure

Protection of the ERCW intake structure from corrosive liquids or oils, released upstream of the plant site, is provided by the mechanics of river flow. The intake structure is located on the inside convex bank of the river bend downstream of a dike rising to an elevation of approximately 700 feet (MSL). The dike coupled with the mechanics of river flow protects the structure. According to flow theory and actual observations made on various rivers, water particles in a bend have a "transverse circulation"; particles near the surface move toward the concave bank and those at the bottom move toward the convex bank. Hence, for normal river levels, the released material would be swept around the intake structure. In the event of liquids or oils reaching the intake structure, no significant effect should occur. Pumps take suction approximately 50 feet below the minimum normal water level and approximately 13 feet below the level anticipated in the event of downstream dam failure. Any oils or fluids which did enter the pumps would be highly diluted and in such a state would have a minimum effect on system piping losses and heat exchanger capabilities.

2.2.3.7 Evaluation of the Potential for Damage to Equipment or Structures Important to Reactor Safety in the Event of the Collapse of Cooling Towers

As shown in Figure 2.1.2-1, the natural draft cooling towers are located a distance away from safety-related structures at least equal to the height of the towers above grade. Therefore, if the towers collapse, the function of the safety-related structures will not be impaired. Missiles resulting from flying debris will also not impair the safety-related structures as discussed in Chapter 3.

2.2.3.8 Evaluation of a Release on the Tennessee River of Toxic or Flammable Materials on Plant Safety Features and Control Room Habitability

The shipping on the Tennessee River consists mainly of fuel oils, wood products and minerals. Chemicals represent only a minor percentage of the barge shipping by the Sequoyah Nuclear Plant. A list of the commodities shipped passed the Sequoyah Nuclear Plant in 1972 is presented in Table 2.2.3-1. On the average, seven tows per week consisting of three barges passed the Sequoyah site. Of the dangerous cargo traffic, one tow per week consisting of two barges passed the Sequoyah site on the average.

The release of flammable or toxic materials on the river in the vicinity of the plant will have no effect on the plant safety features.

The ERCW intake pumping station is protected against fire by virtue of design. Pump suction is taken from the bottom of the channel. All pumps and essential cables and instruments are protected from fire by being enclosed within concrete walls. Even if fuel oil from a spill should reach the intake pumping station, the oil would not have significant effect on the water intake system or the systems it serves. Entry of oil in the intake structure is unlikely since oil will float on water. Any oil that did enter the pumps would be highly diluted and in such a state would have a minor effect on system piping losses and heat exchanger capabilities.

In the event of a release of dense smoke from combustion of flammable liquids in the direction of the control room, personnel in the MCR can manually initiate a CRI which will isolate the control room when a hazardous smoke concentration level is detected. (See sections 6.4 and 9.4.) The Control Room Air Cleanup System has high efficiency particulate filters and charcoal absorbers. A portion of the control room air recirculation flow is also passed through filters. Thus, the concentration of smoke will be maintained at a very low level. In addition, self-contained breathing apparatus will also be available.

2.2.3.9 Evaluation of Potential Fire and Smoke Hazard from Onsite Fuel Oil Storage Facilities

The onsite storage facilities for diesel fuel oil are described in detail in Sections 9.5.4.1 and 9.5.4.2. The maximum amount of fuel oil stored at the plant is (1) 68,000 gallons in each of four storage tanks within the diesel generator building, (2) Two 550-gallon "day" tanks are also located within each diesel generator room. (3) Two storage tanks with a capacity of 71,000 gallons each are located south-southeast of the diesel generator building and (4) two 2,900 gallon FLEX diesel generator Day Tanks are located in the Additional Diesel Generator Building. The storage sites are approximately 260 and 300 meters from the control building, respectively.

The oil storage tanks in the diesel generator building (DGB) are embedded in a concrete substructure of a Class I seismic building. The storage tanks and diesel generators are separated by thick concrete walls. Fire protection for the DGB is described in the fire protection report (see 9.5.1).

A postulated fire involving the oil storage facilities which are located south-southeast of the diesel generator building should have no consequences other than the effects of dense smoke. These tanks are separated from other facilities and are surrounded by a high dike.

Additional fuel oil storage tanks have been added to support Diverse and Flexible Coping Strategies (FLEX) operations. These include: (1) Two 185-gallon “day” tanks for the two 225-kVA diesel generators located on the Auxiliary Building roof (elevation 763.0), and (2) One 9,495-gallon fuel oil storage tank located in the yard south of the Auxiliary Building. Each diesel generator (including day tank) has fire suppression and detection. The fuel oil storage tank is a double wall UL2085 Fireguard tank and because it is located more than 50 feet from a critical building, fire detection and suppression are not required (NFPA 30). The Auxiliary Building roof and Control and Auxiliary Building walls which could be exposed to fire from either of these sources are all credited as 3-hour fire barriers.

An evaluation of the hazard to personnel in the control room from a release of dense smoke is given in Section 6.4.1.2.

2.2.4 Forest Fires

Further clearing has taken place since the time of plant construction. For the most part, the ground has been cleared for two thousand feet around the plant buildings. There are no wooded areas close enough to present a hazard from forest fires.

2.2.5 References

1. Atomic Energy Commission, WASH-1400-D, Reactor Safety Study: An Assessment of Accident Risks in U.S. Commercial Nuclear Power Plants, 1974.

2. Kondrat’ev, N. E., River Flow and River Channel Formation, Technical Services, U. S. Department of Commerce, 1959.

3. TIC-ECS-27, "Main Control Room Habitability During Hazardous Chemical Releases at or Near the Plant."

SQN

TABLE 2.2.2-1

HAZARDOUS RIVER TRAFFIC
THAT PASSES SEQUOYAH NUCLEAR PLANT
1982 - 1992 (TONS)
U.S. ARMY CORPS OF ENGINEERS DATA

COMMODITY	1982	1983	1984	1985	1986	1987	1988	1989	1990	1991	1992
2871 Nitrogenous Fertilizer	2,982	20,260	12,417	20,958	19,867	12,1234	11,636	7,591	8,988	NA	NA
56216 Urea Fertilizers	NA	NA	NA	NA	NA	NA	NA	NA	8,988	35,569	24,657
2911 Gasoline	0	0	0	0	3,287*	0	0	0	0	0	0
2914 Distilate Fuel Oil	0	3,325	2,762	0	0	0	0	0	0	0	0
2915 Residual Fuel Oil	14,223	0	31,008	43,469	21,849	0	25,487	13,375	16,205	NA	NA
33440 Fuel Oils NEC	NA	NA	NA	NA	NA	NA	NA	NA	16,205	9,105	26,582
2819 Basic Chems NEC	20,295	0	6,036	4,778	2,906	2,588	3,132	0	46,200	NA	NA
52210 Carbon	NA	NA	NA	NA	NA	NA	NA	NA	0	0	2,869
52224 Chlorine	NA	NA	NA	NA	NA	NA	NA	NA	46,200	34,100	38,500
TOTAL	37,500	23,585	52,223	69,205	47,909	14,722	40,255	20,966	71,393	77,774	92,608

NA More detailed and specific commodity codes became available in 1990. Duplicate entries are found in 1990 because the old commodity and the new were identical.

* The actual product was RU250.

T222-01.doc

Table 2.2.2-1a

Hazardous River Traffic
That Passes Sequoyah Nuclear Plant

Calendar Year 1990
(TVA Survey Data)

Asphalt-	Five barges/month, two at 3,000 tons/barge and three at 1,500 tons/barge
Caustic Soda-	One barge/month, 1,400 tons/barge
Chlorine-	One barge every eight days, 1,100 tons/barge
Phosphate-	One barge every two months, 1,500 tons/barge
Potash-	One barge every two months, 1,500 tons/barge
Residual Fuel Oil-	Three barges every two months, 1,500 tons/barge
Sulfate Potash-	One barge every four months, 1,500 tons/barge
Urea-	Six barges per year (three in spring, three in fall), 1,500 tons/barge

Table 2.2.2-1b

Volunteer Army Ammunition Plant
Storage and Transport of Munitions

Type of Munitions	Quantity (per case)	Typical Amount Stored on Site (cases)*	Typical Amount Shipped (cases)
7.62 mm (machine gun)	800 rounds	60	15
5.56 mm (machine gun)	1,680 rounds	30	9
9 mm (pistol)	2000 rounds	4	4
Hand held aluminum flares	20	2	2

* All munitions stored in a magazine designed to store 500,000 pounds of TNT.

TABLE 2.2.3-1 (Sheet 1)

BARGE FREIGHT TRAFFIC PASSING SEQUOYAH NUCLEAR PLANT SITE
TENNESSEE RIVER MILE 484.5

Calendar Year 1972

Commodity	Net Tons	Classed As
Wheat	14,516	--
Manganese Ores and Concentrates	20,773	--
Nonferrous Metal Ores	32,110	--
Coal and Lignite	260,959	--
Limestone	826	--
Sand, Gravel, Crushed Rock	9,990	--
Nonmetallic Minerals, nec	38,364	--
Molasses	7,848	--
Pulpwood	234,017	--
Newsprint	89,383	--
Paper and Paperboard	2,912	--
Pulp, Paper, nec	751	--
Caustic Soda, Liquid,*	3,557	Corrosive Liquid
Basic Chemicals and Products,* nec	26,471	Inflammable Compressed
Miscellaneous Chemical Products*	7,650	Noninflammable Compressed Gas
Gasoline*	126,378	Inflammable Liquid
Kerosene*	879	Combustible Liquid
Distillate Fuel Oil*	2,330	Combustible Liquid

TABLE 2.2.3-1 (Sheet 2)
(Continued)

BARGE FREIGHT TRAFFIC PASSING SEQUOYAH NUCLEAR PLANT SITE
TENNESSEE RIVER MILE 484.5

Calendar Year 1972

Commodity	Net Tons	Classed As
Residual Fuel Oil*	22,520	Combustible Liquid
Asphalt Tar and Pitches*	104,696	Hazardous
Lime	3,469	--
Misc. Nonmetallic Mineral Product	255	--
Slag	1,595	--
Iron and Steel Ingots	621	--
Iron and Steel Bars, Angles, etc.	1,379	--
Iron and Steel Plates and Sheets	2,395	--
Ferroalloys a/*	10,235	Hazardous
Primary Iron and Steel Products, nec	864	--
Copper	8,496	--
Aluminum, Unworked	5,545	--
Machinery, except Electrical	1,854	--
Electrical Machinery	300	--
Nonferrous Metal Scrap	1,554	--
TOTAL	1,045,492	

nec - not elsewhere classified

*Considered dangerous cargo as set forth in Code of Federal Regulations, Title 46, Parts 146 to 149, revised as of January 1, 1969, pp. 24-27.

a/ If ferrochrome, ferromanganese, or ferrosilicon.

Source: Corps of Engineers, Department of the Army.

TABLE 2.2.3-2 (Sheet 1)

TENNESSEE RIVER TRAFFIC PASSING SEQUOYAH NUCLEAR PLANT

(Tennessee River Mile 484.5)

Calendar Year 1978

Code	Commodity	Net Tons
0107	Wheat	2,773
1011	Iron Ore	14,390
1061	Manganese Ore	152,043
1121	Coal	182,021
1411	Limestone	2,800
1491	Salt	146,036
2062	Molasses	7,985
2415	Pulpwood	317,407
2611	Pulp	32,039
2621	Newsprint	20,882
2631	Paper and Paperboard	7,141
2810	Caustic Soda	7,811
2819	Basic Chemicals, NEC	42,174
	* (Methyl Methacrylate)	(37,137)
2871	Nitrogenous Chemical Fertilizers	4,825
2879	Fertilizers and Materials, NEC	10,491
*2915	Residual Fuel Oil	132,681
*2918	Asphalt, Tar and Pitches	151,379
2920	Coke	14,640

TABLE 2.2.3-2 (Sheet 2)
(Continued)

TENNESSEE RIVER TRAFFIC PASSING SEQUOYAH NUCLEAR PLANT

(Tennessee River Mile 484.5)

Calendar Year 1978

Code	Commodity	Net Tons
3291	Miscellaneous Nonmetallic Minerals	346
3312	Slag	2,918
3314	Iron and Steel Ingots	1,186
3315	Iron and Steel Bars	1,504
3316	Iron and Steel Plates	3,473
3318	Ferroalloys	2,800
3319	Primary Iron and Steel	35
3411	Fabricated Metal Products	125
3511	Machinery	575
3611	Electrical Machinery	150
3711	Motor Vehicles	235
3791	Miscellaneous Transportation Equipment	125
	TOTAL	1,262,990

Source: Corps of Engineers, Department of the Army

*Flammable liquids as classified in the "Code of Federal Regulations"

TABLE 2.2.3-3

Gasoline Barge Receipts at Port at Knoxville (In Net Tons)

Year	Net Tons
1960	219,452
1961	143,453
1962	203,625
1963	228,264*
1964	11,084
1965	16,773
1966	2,390
1967	45,079
1968	14,005
1969	36,831
1970	27,361
1971	157,743
1972	126,378
1973	36,506
1974	0**

* Pipeline completed 12/63

** TVA estimate

Source: "Waterbore Commerce of United States Part II"
Department of Army Corp. of Engineers

2.3 METEOROLOGY

2.3.1 Regional Meteorology

2.3.1.1 Data Sources

References used in describing the regional meteorology were the (1) general surface windflow patterns shown by the normal sea level pressure distribution (annual, February, July, and October) for North America and the North Atlantic Ocean--from the U.S. Atomic Energy Commission, ORO-99, A Meteorological Survey of the Oak Ridge Area, Weather Bureau, Oak Ridge, Tennessee, November 1953; (2) wind storm and thunderstorm occurrence--from (a) Local Climatological Data, "Annual Summary with Comparative Data," Chattanooga, Tennessee, U.S. Department of Commerce, NOAA, National Climatic Center, 1979, and (b) Severe Local Storm Occurrences, 1955-1967, ESSA Technical Memorandum WSTM FCST 12, U.S. Department of Commerce, Weather Bureau (now NWS), Silver Spring, Maryland, September l969; (3) tornado occurrence--from (a) "Tornado Occurrences in Tennessee, 1916-1964," John V. Vaiksnoras, State Climatologist, U.S. Department of Commerce, Weather Bureau, Nashville, Tennessee, May 5, 1965, (b) "Tornado Probabilities," H. C. S. Thom, Monthly Weather Review, Volume 91, Nos. 10-12, 1963, (c) discussion with John Vaiksnoras, State Climatologist for Tennessee, Nashville, Tennessee, August 3, 1972, (d) "Tornadoes of the United States," Snowden D. Flora, University of Alabama, November 1953, and (e) National Severe Storms Forecast Center tornado data, 1987 (4) air pollution potential--from Mixing Heights, Wind Speeds, and Potential for Urban Air Pollution Throughout the Contiguous United States, George C. Holzworth, Division of Meteorology, Environmental Protection Agency, Preliminary Document, May 10, 1971; and (5) precipitation--from (a) Precipitation in the Tennessee River Basin, TVA, Division of Water Control Planning, Hydraulic Data Branch, period of record 35 years (1935-1969), (b) Local Climatological Data, "Annual Summary with Comparative Data," Chattanooga, Tennessee, U.S. Department of Commerce, NOAA, National Climatic Center, 1979, (c) U.S. Army, Domestic Area Section, Glaze - Its Meteorology and Climatology, Geographical Distribution, and Economic Effects, Technical Report EP-105, Quartermaster Research and Engineering Center, Natick, Massachusetts, March 1959, and (d) Ostby, Frederick (Employee of U.S. Department of Commerce, NOAA, NWS, National Severe Storms Forecast Center, Kansas City, Missouri), telephone conversation with TVA meteorologist, Norris Nielsen, September 14, 1973.

2.3.1.2 General Climate

The Sequoyah site is in the eastern Tennessee portion of the Southern Appalachian region which is dominated much of the year by the Azores-Bermuda anticyclonic circulation shown in the annual normal sea level pressure distribution (Figure 2.3.1-1). [1] This circulation over the southeastern United States is most pronounced in the fall and is accompanied by extended periods of fair weather and widespread atmospheric stagnation. [2] In winter, the normal circulation pattern becomes diffuse as the eastward moving migratory high and low pressure systems, associated with the midlatitude westerly current, bring alternating cold and warm air masses into the area with resultant changes in wind direction, wind speed, atmospheric stability, precipitation, and other meteorological elements. In summer, the migratory systems are less frequent and less intense, and the area is under the dominance of the western edge of the Azores-Bermuda anticyclone with a warm moist air influx from the Atlantic Ocean and the Gulf of Mexico.

The terrain features of the region have some effect on the general climate. With the mountain ridge and valley terrain aligned northeast-southwest over eastern Tennessee, there is a definite bimodal upvalley-downvalley windflow in the lower 500 to 1000 feet during much of the year. The high Cumberland Plateau terrain, 1500 to 1800 feet above the valley elevation, tends to moderate many of the migratory storms which move from the west across the region. A detectable lake breeze circulation resulting from discontinuities in differential surface heating between land and water is not expected because of the relatively narrow width of the Tennessee River as it flows southwestward through the valley area.

2.3.1.3 Severe Weather

Wind storms may occur several times a year, particularly during winter, spring, and summer with winds exceeding 35 mph and on occasion exceeding 60 mph. The records show the highest wind speed recorded in Chattanooga was 82 mph in March 1947. [3] The highest hourly wind speed recorded at the Sequoyah meteorological facility during the first year of operation, April 2, 1971 -March 31, 1972, was 40 mph. High wind may accompany moderate-to-strong cold frontal passages about 20 to 30 times a year with the maximum frequency in March and April.

High wind may accompany thunderstorms, which occur on about 55 days a year with a maximum frequency in July [3]. The distribution of average monthly thunderstorm occurrences recorded during 1931-1979 at the Chattanooga National Weather Service Office is as follows:

Jan.	Feb.	Mar.	Apr.	May	June	July	Aug.	Sep.	Oct.	Nov.	Dec.	Annual
1	2	4	5	7	l0	11	9	4	1	1	1	56

Severe storm data for 1955-1967 [4] show l0 occurrences of hail 3/4 inch or greater in diameter, 20 occurrences of wind storms with speeds of 50 knots or greater, and 15 occurrences of tornadoes in the one degree latitude-longitude square containing the site. If these severe storm occurrences are assumed to be exclusive of one another, it can be assumed that about 45 severe thunderstorms occurred in the one degree square in this 13-year period. The annual occurrence for the square would be about 3.5. A smaller annual occurrence would be expected for the immediate site area, which is much smaller than the one degree square for which these statistics apply.

The probability of tornado occurrence is extremely low. Statistics show that during the 49-year period, 1916-1964, no tornadoes were reported in Hamilton County, where the Sequoyah site is located. [5] During the 1965-1986 period, three tornadoes were reported in the county. [18] During 1987-October 2002, seven tornadoes were reported in the county. [24] During 1955-1967, a total of 15 tornadoes was recorded for the one degree latitude-longitude square containing the site, for an annual occurrence of 1.15. [4] Using the principles of geometric probability described by H. C. S. Thom, [6] his frequency data for that 1-degree square, and a tornado path size of 0.284 mi^2, [7] the probability of a tornado striking any point in the plant site area is $4.4 \times 1O^{-5}$.

The National Severe Storms Forecast Center in Kansas City, Missouri calculated the tornado return probability for the Sequoyah site based on tornado occurrences within a 30 nautical mile (nm) radius during 1950-1986.[18] A circle of 30 nm radius has an area comparable to a one

degree latitude-longitude square. Based on the 29 tornado occurrences with path size estimates in the 37-year period, the return probability is 1.635×10^{-4} and the mean return interval is 6,115 years. The annual tornado occurrence in the 30nm radius circle was 0.84 (based on 31 tornadoes reported) during that period. During the subsequent period spanning 1987 through October 2002, 23 tornadoes were reported in the same circle. [24] Thus, for the period spanning 1950 through October 2002, 54 tornadoes occurred for an annual occurrence of 1.02. Given the typically small path size of these tornadoes, the return probability and return interval given above should still be representative.

Tornadoes in the eastern Tennessee area generally move northeasterly and cover an average surface path five miles long and one hundred yards wide. [7] Winds of 150 to 200 mph are common in the whirl and are estimated to occasionally reach 300 mph. [7,8]

Days of high air pollution potential, shown in Figure 2.3.1-2, have been depicted by G. C. Holzworth, who presents an expected frequency of high meteorological potential for air pollution. [9] Over a five-year period, his data show that there were about thirty days, or about six days annually, that such conditions could have affected the site area, with most of the days occurring in the fall.

The highest monthly average rainfall near the site area occurs during the winter and early spring months, with March usually having the greatest amount. [10] The maximum 24-hour rainfall reported near the plant site was 7.56 inches in August. High precipitation is also observed in July when air mass thunderstorm activity is common. Minimum precipitation occurs normally in October.

The occurrence of snow, freezing rain, and ice storms in the mid-winter period is not uncommon. During 1931-1995, the maximum total monthly snowfall recorded at Chattanooga was 20.0 inches in March 1993. [25] The average annual snowfall for this period was 4.4 inches. The best estimate of the 100-year recurrence snowfall from a single storm is 14.5 inches which fell during a period from December 4, 1886 through December 6, 1886. [19] The maximum amount on the ground at any one time was 19 inches. This March 1993 24-hour storm was the maximum that occurred in 118 years of record at Chattanooga, Tennessee. No greater single storm or monthly amounts were observed in the southeastern Tennessee area around the plant site through July 2002. [26] The record depth of snow is below the maximum that the safety-related structures can withstand. Assuming the 20-inch snowfall was the depth on top of above ground structures, this equates to a snow load of 14.6 pounds per square foot compared to the design snow load of 20 pounds per square foot. Design criteria for the roofs of safety-related structures is given in Section 3.8. From 1917-18 to 1924-25, there were about three observations of ice storms heavy enough to damage telephone and telegraph lines in the Sequoyah site area. [ll] At least three and perhaps as many as six glaze storms occurred in the general area of the site from 1925-26 to 1952-53. There were about four glaze storms with ice thickness 1/4-inch or more during the period 1928-29 to 1936-37. Also, from 1939 to 1948, freezing rain or drizzle of a trace (0.01 inch) or more occurred on about two days a year.

Hail storms of significant intensity (hailstones 3/4 inch or more in diameter) would likely never occur in the plant area. [7] The probability of occurrence of such a storm can be calculated using Thom's tornado probability equation. [6] With a mean hail path area of two $mi.^2$ (1/2 mi. by 4 mi.) [12], an annual occurrence (of hail 3/4 inch or more in diameter) of 0.77 [4], and an area of 3887 $mi.^2$ for the one degree latitude-longitude square containing the site [6], the probability is calculated to be 3.96×10^{-4}.

Lightning strike density in the vicinity of the plant has been computed to be an average of about 8 ground strikes per square kilometer per year. [27] These are defined as cloud to ground strokes of lightning.

2.3.2 Local Meteorology

2.3.2.1 Data Sources

Most of the data used in this meteorological description were collected at the onsite meteorological facility (Environmental Data Station) in the four-year period from January 1, 1972 through December 31, 1975. Location of this facility with respect to the Sequoyah Nuclear Plant is shown in Figure 2.3.2-1.

A one-year period (May 1, 1975 - April 30, 1976) of wind and temperature data was used for comparison of stability classifications based on hourly-average vertical temperature difference (WT) values with those based on end-of-hour WT values. This comparison was done to determine any effects on the stability class frequency distribution and the joint wind speed and wind direction frequency distributions by stability class resulting from the change in temperature recording procedure from an end-of-hour reading to an hourly-average value.

Because of the limited period of onsite data, long-term fog and snowfall trends as well as supplementary temperature information were obtained from data records for the National Weather Service Office at Lovell Field, Chattanooga, located 14.5 miles south-southwest of the site (Figure 2.3.2-2). Precipitation data were obtained from a 20-year record from the TVA rain gauge station 685, Friendship School, Tennessee, located about 2.5 miles north-northeast of the plant site.

2.3.2.2 Normal and Extreme Values of Meteorological Parameters

With the limited period of onsite data, it is not reasonable to discuss normal and extreme values of meteorological parameters measured onsite; instead, the data should point toward representative mean values of the local meteorological parameters. Therefore, normal and extreme values of parameters measured offsite should be more representative of long-term regional climate, although local site influences may not be reflected.

Wind Direction

Data from the 33-foot wind instruments at the permanent meteorological facility for the January 1972 - December 1975 period represent reasonably well the expected wind conditions in the plant site area. The annual and monthly patterns (Tables 2.3.2-1 through 2.3.2-13 and Figures 2.3.2-3 through 2.3.2-15) show the predominant directions from the northeast and southwest quadrants which reflect the orographic channeling effects of the northeast-southwest aligned valley-ridge terrain.

For most of the months, but especially for the cooler months of the year, there is a weak secondary maximum of wind frequency from the northwest quadrant. This is most likely associated with post cold frontal winds, which are most likely during the optimum seasons (winter and early spring) for frequent migratory low pressure systems.

Wind Direction Persistence

The wind direction persistence1 analysis (based on the 33-foot (10-meter) data) shown in Table 2.3.2-14, gives the persistence for periods two hours or more from the given wind directions. The greatest persistence was from the north-northeast, which included the maximum of 33

hours. Persistence of 24 hours or more occurred with winds from the southwest, north, and northeast. The analysis shows that the occurrence of persistence periods lasting three hours or more is about 59 percent. For 12 hours or more, the occurrence is about four percent.

Wind Speed

The seasonal and annual occurrences of wind speed at the 33-foot tower level for all wind directions are shown in Tables 2.3.2-1 through 2.3.2-13 and Figures 2.3.2-3 through 2.3.2-15. The preponderance of winds from the northeast within the 0.6 to 3.4 mph wind speed range is most likely attributable to the anticyclonic circulation that dominates the eastern Tennessee region in the late summer and fall. Also, the identification of wind speeds less than 3.5 mph with stable anticyclonic flow is reflected in the high frequency of occurrence of this range in late summer and early fall--a period during which stable anticyclonic conditions are most common. On the other hand, these low wind speeds occur least often in winter and early spring--a period frequented by the passage of migratory low pressure systems.

Wind speeds 7.5 mph and greater occurred most frequently with upvalley winds (from the southwest). These wind speeds occurred very infrequently with winds from the east-northeast, east, east-southeast, and southeast. The predominance of strong winds from the southwest may be attributable to the channeling of the southerly and southwesterly flow preceding the passage of cold fronts through the area. Winds greater than 7.5 mph were more frequent from November through April, with a maximum of about 32 percent in April; they occurred least often in July and August.

[1] Persistent wind is defined in this analysis as a continuous wind from one of the 22-1/2 degree sectors (e.g., north-northeast) except that the persistence is not considered to be interrupted if the wind departs from the sector for one hour and then returns, or if there are up to two hours of missing data followed by a continuation of the same directional persistence.

Temperature

A summary of the first year (April 2, 1971 - March 31, 1972) of onsite temperature data from the meteorological facility is shown in Table 2.3.2-15. The average annual temperature was 59.7°F with the range of monthly averages from 40.1°F in February to 75.5°F in August. The extreme maximum and minimum were 96.3°F and 2.9°F in June and January, respectively. Onsite temperature data compare reasonably well with the normal temperature records from the Chattanooga National Weather Service Office (Weather Bureau) shown in Table 2.3.2-16, although extremes of temperature from the one year of onsite data are somewhat conservative as compared to extremes for Chattanooga. [3] [25]

Atmospheric Water Vapor

The first year of onsite temperature and dew point data were used to compute mean and extreme values of absolute and relative humidity shown in Tables 2.3.2-17 and 2.3.2-18. The average annual absolute humidity was 9.7 g/m^3 with the range of monthly averages from 16.2 g/m^3 in June to 4.2 g/m^3 in February. The extreme maximum was 22.3 g/m^3 in June and the extreme minimum was 1 g/m^3 in February.

The average annual relative humidity was 66.5 percent with the range of monthly averages from 50.6 percent in April to 78.4 percent in October and December. The extreme maximum was 100 percent in March, June, September, November, and December, and the extreme minimum was 17 percent in April.

Precipitation

Precipitation patterns, based on a 20-year period (1948-1967) of data collection at the TVA rain gauge station 685, 2.5 miles north-northeast of the plant site, are shown in Table 2.3.2-19. [10] The data show that there was an average of 117 days annually with 0.01 inch or more of precipitation. The average monthly precipitation was 4.81 inches, with the maximum monthly average 6.76 inches occurring in March and the minimum monthly average 2.86 inches occurring in October. The extreme monthly maximum and minimum were 16.58 inches in November and 0.09 inch in October, respectively. This station was discontinued after 1972, but examination of records for 1968-1972 showed no changes in extremes. [28] Also, the extreme maximum and minimum values in Table 2.3.2-19 have not been exceeded at the Chattanooga airport station during the 1940-2002 period. [25]

Snowfall does not occur often in the Sequoyah site area. Chattanooga snowfall data in Table 2.3.2-20 are considered representative. [25] The average annual snowfall was 4.4 inches and occurred mostly in December through March. The maximum 24-hour snowfall reported at Chattanooga was 20.0 inches in March 1993; the next highest was 10.2 inches in January 1988.

Fog

No observations of the frequency and intensity of fogs have been made in the site area. However, Chattanooga National Weather Service records (Table 2.3.2-21) indicate that heavy fogs (visibility of 1/4 mile or less) occurred on an average of 36 days annually with a maximum average monthly frequency of six days in October and a minimum average monthly frequency of two days from February through July. [3]

Atmospheric Stability

At the present time, atmospheric stability is calculated from the difference between the hourly-average temperature values from two levels. Prior to January 8, 1975, the temperature difference was calculated by a high speed digital computer that was programmed to convert the difference between the ambient temperature sensor resistances at any two instrument levels to a temperature difference value (WT). Before January 8, 1975, both temperature and temperature difference data were obtained from end-of-hour readings.

Four years (January 1, 1972 - December 31, 1975) of onsite temperature difference data from the 33- and 150-foot (9- and 46-meter) tower levels of the permanent meteorological facility were categorized into seven atmospheric stability groups (Pasquill classes A through G). Table 2.3.2-22 shows that the Pasquill stability classes E, F, and G occurred about 72 percent of the time. The most stable class, G, occurred about seven percent of the time. The total occurrence of the least stable classes, A, B, and C, was about eight percent, while the neutral stability class, D, occurred about 20 percent of the time.

Joint percentage frequencies of wind direction and wind speed for the Pasquill stability classes A through G are summarized in Tables 2.3.2-23 through 2.3.2-29 and Figures 2.3.2-16 through 2.3.2-22. The most critical conditions, class G and wind speeds less than 3.5 mph (Table 2.3.2-29, Figure 2.3.2-22), occurred less than six percent of the time. Stability category G is most often associated with downvalley winds (from the north-northeast and northeast), with a secondary maximum associated upvalley winds (from the southwest and south-southwest). Annual frequencies for classes E and F (Tables 2.3.2-27 and 2.3.2-28) show respective frequencies of about 17 and 15 percent for wind speeds less than 3.5 mph.

Using the same type of instrumentation, the capability for calculating hourly average ΔT values (based on hourly-average temperature values) was established in January 1975. A special adjustment of the computer program developed for this purpose was made to also obtain instantaneous, end-of-hour ΔT values for comparison with the hourly-average values.

Table 2.3.2-30 provides the frequencies for hourly-average and end-of-hour stability classes (Pasquill A-G), and Tables 2.3.2-31 through 2.3.2-58 provide joint frequencies of wind direction and wind speed by stability class, each for hourly-average and end-of-hour ΔT values. Summaries based on hourly-average and end-of-hour ΔT values are presented for 33- to 150-foot ΔT and 33-foot wind direction and wind speed data, and for 33- to 300-foot ΔT and 300-foot wind direction and wind speed data. The same wind direction and wind speed data were used with the hourly-average and the end-of-hour ΔT data.

2.3.2.3 Potential Influence of the Plant and its Facilities on Local Meteorology

The presence and operation of the Sequoyah Nuclear Plant should have no noticeable effects on the local meteorology, with the exception of a slight increase in frequency, duration, and intensity of steam fogs forming at the river surface due to heated water releases through the diffusers. These fogs develop as a result of elevation of the dew point by the addition of moisture to the air from the water surface. Once this shallow fog moves on shore, the moisture source is cut off and the fog dissipates. Thus, the increased fogging should be confined within the boundaries of the Chickamauga Reservoir and should not affect long-term fog patterns in the surrounding area. This phenomenon has been observed frequently over the extended river and reservoir system within the Tennessee Valley Region.

Based on previous experience with natural-draft cooling tower operation at the TVA Paradise Steam Plant, no adverse impact on the local meteorology is expected from the operation of supplemental natural-draft cooling towers at the Sequoyah Plant. Some minor effects may include increased atmospheric moisture, decreased solar radiation, and increased concentrations of aerosols related to the drift. However, the significance of these effects would be very difficult or impossible to measure.

2.3.2.4 Topographical Description

The principal effect of the topography in the Sequoyah area on the diffusion of effluent releases is one of confinement to the downwind sectors of predominant wind. Figure 2.3.2-23, sheets 1-9, shows the topographic features within five miles and topographic cross sections in the 16 compass sectors. Annually, the majority of the releases of radioactive effluent would be

dispersed within the northeasterly and southwesterly quadrants from the plant as a result of the upvalley-downvalley low-level wind. Therefore, relative ground-level concentrations would be expected to be higher in these sectors, particularly during periods of low wind and stable conditions. Also, with the relatively flat and undulating valley floor, there should be minimal discontinuity of the general low-level wind pattern from terrain roughness or irregularity. Furthermore, differences in the ambient thermal or stability structure in the area from differential surface heating between land and water should not cause significant alterations to the wind and stability patterns in the plant area. On rare occasions, slight buildup of effluent concentration could occur in the Cumberland escarpment area, about 15 miles to the northwest, where some geographically induced impingement or entrapment of the effluent might be expected.

2.3.3 On-Site Meteorological Measurement Program

2.3.3.1 Siting and Description of Instruments

The Sequoyah meteorological facility consists of a 91-meter (300 foot) instrumented tower for wind and temperature measurements, a separate 10-meter (33 foot) tower for dewpoint measurements, a ground-based instrument for rainfall measurements, and an Environmental Data Station (EDS), which houses the data collection and recording equipment. A system of lightning and surge protection circuitry with proper grounding is included in the facility design. This facility is located approximately 0.74 miles (1.2 kilometers) southwest of the Reactor Building and about 50 feet (15 meters) above plant grade (Figure 2.3.2-1).

Rainfall is monitored from a rain gauge located approximately 55 feet from the tower. Data collected include: (1) wind speed and direction at 10, 46, and 91 meters (33, 150, and 300 feet), (2) temperature at 10, 46, and 91 meters; (3) dewpoint at 10 meters; and (4) rainfall at 1 meter (3 feet). More exact measurements heights for wind and temperature sensors are given in EDS Manual [Reference 20]. Elsewhere in this document, temperature and wind sensor heights are given as 10, 46, and 91 meters. Collection of onsite meteorological data at the Sequoyah Nuclear Plant commenced in April 1971 with measurements of wind speed and wind direction at 10 meter and 91 meters, temperature at 1, 10, 46, and 91 meters; and dewpoint and rainfall at 1 meter. Measurements of 46 meter wind speed/direction and 10 meter dewpoint began on August 6, 1976. Measurement of 1 meter dewpoint ended on January 9, 1979. Measurement of 1 meter temperature ended on January 10, 1979. The dewpoint sensor was moved to a separate tower on June 7, 1994.

Instrument Description

A description of the meteorological sensors follows. More detailed sensor specifications are included in the EDS manual. Replacement sensors, which may be of a different manufacturer or model, will satisfy Regulatory Guide 1.23 (Revision 1). [Reference 13]

SENSOR	HEIGHT (meters)	DESCRIPTION
Wind Direction and Wind Speed	10, 46, and 91	Ultrasonic Wind Sensor.

SENSOR	HEIGHT (meters)	DESCRIPTION
Temperature	10, 46, and 91	Platinum wire resistance temperature detector (RTD) with aspirated radiation shield.
Dewpoint	10	Capacitive Humidity Sensor.
Rainfall	1	Tipping bucket rain gauge.

2.3.3.2 Data Acquisition System

The data acquisition system is located at the EDS and consists of meteorological sensors, a computer (with peripherals), and various interface devices. These devices send meteorological data to the plant, to the Central Emergency Control Center (CECC), and to enable callup for data validation and archiving offsite.

System Accuracies

The meteorological data collection system is designed and replacement components are chosen to meet or exceed specifications for accuracy identified in NRC Regulatory Guide 1.23, Revision 1.

The meteorological data collection satisfies the R.G. 1.23 accuracy requirements. A detailed listing of error sources for each parameter is included in the EDS manual.

2.3.3.3 Data Recording and Display

The data acquisition is under control of the computer program. The output of each meteorological sensor is scanned periodically, scaled, and the data values are stored.

Meteorological sensor outputs (except rainfall) are measured every five seconds (720 per hour). Rainfall is measured continuously as it occurs. Software data processing routines within the computer accumulate output and perform data calculations to generate 15-minute and hourly averages of wind speed and temperature, 15-minute and hourly vector wind speed and direction, 15-minute and hourly total precipitation, hourly average of dewpoint, and hourly horizontal wind direction sigmas. Vector wind speed and direction are calculated along with arithmetic average wind speed.

Selected data each 15 minutes and all data each hour are stored for remote data access.

Data sent to the plant computer systems every minute includes 10, 46, and 91 meter values for wind speed, wind direction, and temperature.

Data sent to the Central Emergency Control Center (CECC) computer in Chattanooga every 15 minutes includes 91-, 46-, and 10-meter wind direction, wind speed, and temperature values. These data are available from the CECC computer to other TVA and State emergency centers in support of the Radiological Emergency Plan (REP), including the Technical Support Center at Sequoyah. Remote access of meteorological data by the NRC is available through the CECC computer.

Data are sent from the EDS to an offsite computer for validation, reporting, and archiving.

2.3.3.4 Equipment Servicing, Maintenance, and Calibration

The meteorological equipment at EDS is kept in proper operating condition by staff that are trained and qualified for necessary tasks.

Most equipment is calibrated or replaced at least every six months of service. The methods for maintaining a calibrated status for the components of the meteorological data collection system (sensors, recorders, electronics, DVM, data logger, etc.) include field checks, field calibration, and/or replacement by a laboratory calibrated component. More frequent calibration intervals for individual components may be conducted, on the basis of the operational history of the component type. Detailed procedures are used and are referenced in the EDS Manual.

2.3.3.5 Operational Meteorological Program

The operational phase of the meteorological program includes those procedures and responsibilities related to activities beginning with the initial fuel loading and continuing through the life of the plant. This phase of the meteorological data collection program will be continuous without major interruptions. The meteorological program has been developed to be consistent with guidance given in NRC Regulatory Guide 1.23 (Revision 1) and the reporting procedure in Regulatory Guide 1.21 (Revision 1). [Reference 14] The basic objective is to maintain data collection performance to assure at least 90 percent joint recoverability and availability of data needed for assessing the relative concentrations and doses resulting from accidental or routine releases.

The restoration of the data collection capability of the meteorological facility in the event of equipment failure or malfunction will be accomplished by replacement or repair of affected equipment. A stock of spare parts and equipment is maintained to minimize and shorten the periods of outages. Equipment malfunctions or outages are detected by maintenance personnel during routine or special checks. Equipment outages that affect the data transmitted to the plant can be detected by review of data displays in the reactor control room. Also, checks of data availability to the emergency centers are performed each work day. When an outage of one or more of the critical data items occurs, the appropriate maintenance personnel will be notified.

In the event that the onsite meteorological facility is rendered nonfunctional, or there is an outage of communications or data access systems; there is no fully representative offsite source of meteorological data for identification of atmospheric dispersion conditions. Therefore; TVA has prepared objective backup procedures to provide estimates for missing or garbled data. These procedures incorporate available onsite data (for a partial loss of data), offsite data, and conditional climatology. The CECC meteorologist will apply the appropriate backup procedures.

2.3.4 Short-Term (Accident) Diffusion Estimates

2.3.4.1 Objective

Two sets of atmospheric dilution factors (X/Q values) are currently used for accident releases modeled as ground level releases from the Sequoyah Nuclear Plant for specified time intervals and distances. The first set is based on one year (April 2, 1971 through March 31, 1972) of data from the Sequoyah permanent meteorological facility. Part of this set was used in the design accident dose calculations and is shown in Table 15A-2. The latest and most widely used set is based on four years (January 1972 through December 1975) of data (Tables 2.3.2-23 through 2.3.2-29). This data was used in Chapter 11.

2.3.4.2 Calculations

Two mathematical models were used in estimating atmospheric dilution factors during postulated reactor accidents - one for the 1-hour and 8-hour (0-8 hours) averaging periods and the other for the 16-hour (8-24 hours), 3-day (1-4 days), and 26-day (4-30 days) averaging periods. Calculations with the two models utilize hourly values of wind direction, wind speed, and atmospheric stability (Pasquill classes A through G).

Nomenclature

A = minimum cross-sectional area of the Reactor Building (m^2)

c = an empirical constant used in defining the magnitude of the building wake (dimensionless)

Q = source strength or effluent release rate (curies/sec)

u = mean horizontal wind speed at 10 meters (m/sec)

x = distance from effluent release point to point at which X/Q values are computed (m)

⦸ = 3.1416

σ_y = Pasquill horizontal crosswind plume standard deviation (m)

σ_z = Pasquill vertical plume standard deviation (m)

x = ground-level concentration (curies/m^3)

Model for the 1-Hour and 8-Hour Averaging Periods

Atmospheric dilution factors were calculated for the 1-hour and 8-hour averaging periods using a Gaussian centerline building wake diffusion equation discussed in NRC Regulatory Guide 1.4 (Revision 2) [15] and Slade [16]:

$$X / Q = \frac{1}{(\eta \sigma_Y \sigma_Z + cA)\bar{u}} \qquad (1)$$

where cA is a building wake factor.

Model for Averaging Periods Greater than 8 Hours

Atmospheric dilution factors were calculated for the 16-hour, 3-day, and 26-day averaging periods using a Gaussian sector average building wake diffusion equation presented in NRC Regulatory Guide 1.4 (Revision 2):

$$X / Q = \frac{2.032}{\sigma_Z \bar{xu}} \qquad (2)$$

For this model, it is assumed that sufficient time elapses to allow the plume to meander and uniformly spread across the 22-1/2-degree downwind sector.

Locations for Which Atmospheric Dilution Factors Were Calculated and Effluent Release Zones

Atmospheric dilution factors were calculated for two location categories: (1) exclusion area boundary, and (2) outer boundary of the Low Population Zone (LPZ). The effluent release zones for the Sequoyah Plant were defined for three locations (see Figure 2.1.2.-2): (1) Release Zone 1, the Auxiliary Building vent exhaust and the Shield Building vent exhaust; (2) Release Zone 2, the radioactive chemical hood exhaust; and (3) Release Zone 3, the condenser air ejector exhaust.

Atmospheric Dilution Factors for the Exclusion Area Boundary

Each release zone was considered individually in calculating atmospheric dilution factors at the exclusion area boundary. The distances from each effluent release zone to the intersections of the 16 compass-point directional sectors with the exclusion area boundary are shown in Table 2.3.4-1.

The hourly average wind speed and atmospheric stability were obtained for a given hour in the January 1972 - December 1975 data period. These data were used with equation (I) to calculate an atmospheric dilution factor corresponding to the exclusion area boundary distance for a particular release zone. This procedure was repeated for each release zone as frequently as there was valid hourly meteorological information available during the 48-month period. These calculations resulted in a list of hourly values for each of the three release zones which were tabulated into cumulative frequency distributions and are shown in Tables 2.3.4-2, 2.3.4-3, and 2.3.4-4 corresponding to Release Zones 1, 2, and 3, respectively. The 5th and 50th percentile and average values of the atmospheric dilution factors for each release zone were also computed and follow:

One-Hour Atmospheric Dilution Factors

At Exclusion Area Boundary (sec/m^3)

Release Zone	5th Percentile	50th Percentile	Average
1	0.859×10^{-3}	0.163×10^{-3}	0.269×10^{-3}
2	0.795×10^{-3}	0.145×10^{-3}	0.243×10^{-3}
3	0.892×10^{-3}	0.164×10^{-3}	0.279×10^{-3}

A more conservative approach consisted of using the above procedure except selecting the shortest distance from each release zone to the exclusion area boundary and calculating the atmospheric dilution factor for all directions using this fixed distance. The minimum distances as shown in Table 2.3.4-1 are 556 meters, 600 meters, and 509 meters for Release Zones 1, 2, and 3, respectively. The calculations resulted in a list of hourly values for each of the three release zones. These values were tabulated into cumulative frequency distributions as shown in Tables 2.3.4-5, 2.3.4-6, and 2.3.4-7, corresponding to Release Zones 1, 2, and 3, respectively. The 5th and 50th percentile and average atmospheric dilution factors follow:

One-Hour Atmospheric Dilution Factors

At Exclusion Area Boundary (sec/m^3)

Release Zone	5th Percentile	50th Percentile	Average
1	0.147×10^{-2}	0.234×10^{-3}	0.396×10^{-3}
2	0.130×10^{-2}	0.215×10^{-3}	0.365×10^{-3}
3	0.162×10^{-2}	0.258×10^{-3}	0.435×10^{-3}

Atmospheric Dilution Factors for Outer Boundary of the LPZ

Atmospheric dilution factors for the outer boundary of the LPZ were calculated by considering a single source or release zone that was assumed to be representative of the three actual release zones. Unlike the calculations for the actual exclusion area boundary in which distances changed with direction, the distance of 4828 meters was used for all calculations for the outer boundary of the LPZ. These values were calculated for averaging times of 1 hour, 8 hours, 16 hours, 3 days, and 26 days. All 1-hour average values were obtained by use of equation (1) and the hourly meteorological observations. The cumulative frequency distribution of these values is listed in Table 2.3.4-8. The 5th and 50th percentile and average values are also shown.

For a given sector, the 8-hour average atmospheric dilution factor was obtained by averaging the hourly values. For a given 8-hour period, sixteen 8-hour averages were obtained--one for each compass-point sector. The average value selected to represent the given 8-hour period was the maximum of the sixteen. There were 35,057 8-hour periods from January 1, 1972 through December 31, 1975 where consecutive 8-hour periods overlapped for seven hours. An atmospheric dilution factor was not calculated for an 8-hour period unless there were at least four hours of valid meteorological observations during the period. After the values were computed for the valid 8-hour periods, they were summarized into the cumulative frequency distribution shown in Table 2.3.4-9. The average and 5th and 50th percentile statistics were also computed.

All other averages (the 16-hour, 3-day, and 26-day averages) were treated in a fashion analogous to the 8-hour average except that equation (2) was used to calculate the atmospheric dilution factors. Tables 2.3.4-10, 2.3.4-11, and 2.3.4-12 summarize the cumulative frequency distributions of the values for the corresponding l6-hour, 3-day, and 26-day averaging periods, respectively. The 5th and 50th percentile and average values for each averaging period are included in the following table:

Atmospheric Dilution Factor at Outer Boundary of LPZ (sec/m^3)

Averaging Time	5th Percentile	50th Percentile	Average
1-hour	0.139×10^{-3}	0.142×10^{-4}	0.319×10^{-4}
8-hour	0.539×10^{-4}	0.980×10^{-5}	0.169×10^{-4}
16-hour	0.717×10^{-5}	0.236×10^{-5}	0.299×10^{-5}
3-day	0.434×10^{-5}	0.176×10^{-5}	0.201×10^{-5}
26-day	0.271×10^{-5}	0.153×10^{-5}	0.148×10^{-5}

Data from the one-year period (May 1, 1975 through April 30, 1976) were used to compare atmospheric dilution factors obtained from stability classes determined from end-of-hour

temperature measurements and those determined from hourly average temperature measurements. These data (Tables 2.3.2-31 through 2.3.2-44) include wind direction and wind speed at 33 feet (10 meters) above ground and temperature difference between the elevations of 33 and 150 feet (46 meters).

Table 2.3.4-13 compares atmospheric dilution factors based on (1) hourly-average ΔT data and (2) end-of-hour ΔT data. The values presented for comparison are fifth percentile values for 1-hour and 8-hour periods at the minimum exclusion area boundary distance of 556 meters and for 8-hour, 16-hour, 3-day, and 26-day periods at the LPZ distance of 4828 meters.

It is apparent from examination of the data tables that the differences between atmospheric dilution factors obtained from the data set containing hourly-average ΔT and those obtained from the data set containing end-of-hour ΔT are not significant. The joint frequencies of wind direction and wind speed by atmospheric stability class for 33- to 300-foot ΔT and 300-foot wind data show even closer agreement than those based on 33- to 150-foot ΔT and 33-foot wind data. Therefore, any calculations based on end-of-hour 33- to 300- foot ΔT, or even 150- to 300-foot ΔT, could be expected to be at least as representative of those based on hourly-average ΔT as those for 33- to 150-foot ΔT and 33-foot wind data presented in Table 2.3.4-13.

2.3.5 Long-Term (Routine) Diffusion Estimates

2.3.5.1 Objective

In this section, calculated average annual atmospheric dispersion factors (X/Q values) are reported at specified distances for routine releases from the Sequoyah Nuclear Plant. A dispersion equation is applied which accounts for initial dilution of gaseous effluents in the building wake. Joint frequency distributions of wind direction and speed by atmospheric stability class based on onsite meteorological data collected during the period of January 1972 through December 1975 are used in the calculations. Joint frequency distributions are presented in Tables 2.3.2-23 through 2.3.2-29.

2.3.5.2 Calculations

Average annual atmospheric dispersion factors are calculated for locations along 16 radial lines corresponding to the major compass points drawn from the center of the nuclear plant complex. Calculations in each of the 16 sectors are made for the site boundary and for the distances 1, 2, 3, 4, 5, 10, 15, 20, 30, 40, and 50 miles. Three effluent release zones are designated for calculating atmospheric dispersion factors at the site boundary (see Figure 2.1.2-2). These are as follows:

Release Zone 1 - Auxiliary Building vent exhaust and Shield Building vent exhaust.

Release Zone 2 - Radioactive chemical hood exhaust.

Release Zone 3 - Condenser air ejector exhaust.

In calculating the average annual atmospheric dispersion factors for the selected distances between 1 and 50 miles, it is assumed that gaseous effluents are released from a single point (the three release zones are not considered in these calculations). The distances to the unrestricted area boundary from this point are shown in Table 11.3.9-1.

Atmospheric dispersion calculations are based on a building wake model described by Davidson [16,17]. The average annual atmospheric dispersion factor at any point of interest x is given by:

wind speeds stability types

$$\frac{X}{Q_o} = \left(\frac{2}{\pi}\right)^{1/2} \frac{1}{W} \sum i \sum j \frac{f_{i_j}}{(\Sigma_z)_j \, U_i}, \ \mathrm{SEC}/m^3$$

where

W = 2p x/16, the sector width at downwind distances x, m,

u_i = wind speed i, m/s,

f_{ij}= frequency with which wind speed u_i occurs in the sector of interest during atmospheric stability class j,

$$(\Sigma_z)_j = \left((\sigma_z)_j^2 + \frac{cA}{\pi}\right)^{1/2}$$

the vertical standard deviation of the plume (modified for the effect of building wake dilution) at the distance x for stability class j, m,

$(\sigma_z)_j$ = Pasquill vertical standard deviation of the plume at the distance x for stability class j, m,

c = parameter that relates the cross-sectional area of a building to the size of the turbulent wake caused by the building,

A = minimum Reactor Building cross-sectional area, m^2.

In the expression for (σ_z), c is assumed to be 0.5 and A is assumed to be 1,800 m^2. Table 2.3.4-14 lists average annual atmospheric dispersion factors for the Sequoyah site.

2.3.6 References

1. U.S. Atomic Energy Commission, A Meteorological Survey of the Oak Ridge Area, ORO-99, Weather Bureau, Oak Ridge, Tennessee November 1953, page 377.

2. U.S. Atomic Energy Commission, A Meteorological Survey of the Oak Ridge Area, ORO-99, Weather Bureau, Oak Ridge, Tennessee,
November 1953, page 192.

3. Local Climatological Data, "Annual Summary With Comparative Data," Chattanooga, Tennessee, U.S. Department of Commerce, NOAA, National Climatic Center, Asheville, North Carolina, 1979.

4. Severe Local Storm Occurrences, 1955-1967, ESSA Technical Memorandum WSTM FCST 12, U.S. Department of Commerce, Weather Bureau (now NWS), Silver Spring, Maryland, September 1969.

5. "Tornado Occurrences in Tennessee, 1916-1964," John V. Vaiksnoras, U.S. Department of Commerce, Weather Bureau, Nashville, Tennessee, May 5, 1965.

6. "Tornado Probabilities," H. C. S. Thom, Monthly Weather Review, Volume 91, Nos. 10-12, 1963, pp. 730-736.

7. Discussion with John Vaiksnoras, State Climatologist for Tennessee, Nashville, Tennessee, August 3, 1972.

8. "Tornadoes of the United States," Snowden D. Flora, University of Oklahoma Press, November 1953.

9. Mixing Heights, Wind Speeds, and Potential for Urban Air Pollution Throughout the Contiguous United States, George C. Holzworth, Division of Meteorology, Environmental Protection Agency, Preliminary Document, May 10, 1971.

10. Precipitation in the Tennessee River Basin, Tennessee Valley Authority, Division of Water Control Planning, Hydraulic Data Branch, period of record 35 Years (1935-1969).

11. Glaze - Its Meteorology and Climatology, Geographical Distribution, and Economic Effects, Technical Report EP-105, U.S. Army, Domestic Area Section, Quartermaster Research and Engineering Center, Environmental Protection Research Division, Natick, Massachusetts, March 1959.

12. Ostby, Frederick, employee of U.S. Department of Commerce, NOAA, NWS, National Severe Storms Forecast Center, Kansas City, Missouri, telephone conversation with TVA meteorologist, Norris Nielsen, September 14, 1973.

13. U.S. Nuclear Regulatory Commission, Regulatory Guide 1.23, Revision 1, “Meteorological Monitoring Programs for Nuclear Power Plants,” Washington, D.C., March 2007.

14. Regulatory Guide 1.21, Revision 1, "Measuring, Evaluating, and Reporting Radioactivity in Solid Wastes and Releases of Radioactive Materials in Liquid and Gaseous Effluents from Light-Water-Cooled Nuclear Power Plants," U.S. Atomic Energy Commission, Washington, D.C., June 1974.

15. Regulatory Guide 1.4, Revision 2, "Assumptions Used for Evaluating the Potential Radiological Consequences of a Loss of Coolant Accident for Pressurized Water Reactors," U.S. Atomic Energy Commission, Washington, D.C., June 1974.

16. Meteorology and Atomic Energy, D. H. Slade, ed., USAEC Report, TID-24190, July 1968.

17. Atmospheric Diffusion Experiments with SF_6 Tracer Gas at Three Mile Island Nuclear Station Under Low Wind Speed Inversion Conditions, Pickard, Lowe, and Associates, Inc., The Research Corporation of New England, General Public Utilities Service Corporation, January 1972.

18. Tornado data for the Sequoyah Nuclear Plant site prepared by the National Severe Storms Forecast Center, Kansas City, Missouri, November 1987.

19. "Extremes of Snowfall: United States and Canada," Weatherwise, Published for American Meteorological Society by Weatherwise, Inc., December 1970.

20. Sequoyah Nuclear Plant Environmental Data Station Manual, Tennessee Valley Authority.

21. Deleted by Amend 15

22. Deleted by Amend 15

23. Deleted by Amend 23.

24. Storm Data, U.S. Department of Commerce, NOAA, National Climatic Data Center, Asheville, North Carolina, Volume 29, Number 1 through Volume 44, Number 10, January 1987 - October 2002.

25. Local Climatological Data, “Annual Summary with Comparative Data,” Chattanooga, Tennessee, U.S. Department of Commerce, NOAA, National Climatic Data Center, Asheville, North Carolina, 2002.

26. Climatological Data, Tennessee, U.S. Department of Commerce, NOAA, National Climatic Data Center, Asheville, North Carolina, Volumes 101-107, July (Number 7) Issues, 1996 - 2002.

27. Lighting Strike Density for the Contiguous United States From Thunderstorm Duration Records, NUREG/CR-3759, prepared by NOAA’s National Severe Storms Laboratory, Norman, Oklahoma, for Division of Health, Siting, and Waste Management, Office of Nuclear Regulatory Research, U.S. Nuclear Regulatory Commission, Washington, D.C., May 1984.

28. Precipitation in the Tennessee River Basin, Tennessee Valley Authority, Division of Water Control Planning, Hydraulic Data Branch, 1968 - 1972.

TABLE 2.3.2-1

JOINT PERCENTAGE FREQUENCIES OF WIND SPEED BY DIRECTION

DISREGARDING STABILITY CLASS

SEQUOYAH NUCLEAR PLANT

JAN 1, 72 - DEC 31, 75

WIND DIRECTION	WIND SPEED (MPH) 0.6-1.4	1.5-3.4	3.5-5.4	5.5-7.4	7.5-12.4	12.5-18.4	18.5-24.4	>=24.5	Total
N	0.51	3.20	1.63	0.67	0.58	0.0	0.0	0.0	6.59
NNE	0.82	8.30	5.05	2.46	2.18	0.11	0.0	0.0	18.92
NE	0.48	3.86	2.59	1.01	0.83	0.06	0.0	0.0	8.83
ENE	0.42	1.58	0.39	0.09	0.0	0.01	0.0	0.0	2.49
E	0.50	0.80	0.11	0.03	0.02	0.01	0.0	0.0	1.47
ESE	0.33	0.45	0.07	0.02	0.01	0.02	0.0	0.0	0.90
SE	0.34	0.82	0.19	0.01	0.02	0.0	0.0	0.0	1.38
SSE	0.41	1.36	0.55	0.23	0.36	0.06	0.02	0.0	2.99
S	0.47	2.89	2.49	1.58	1.53	0.14	0.0	0.0	9.10
SSW	0.29	3.79	4.91	3.44	2.84	0.24	0.0	0.0	15.51
SW	0.30	3.55	4.79	3.02	1.93	0.20	0.02	0.0	13.81
WSW	0.24	1.68	1.19	0.66	0.69	0.16	0.02	0.0	4.64
W	0.21	0.78	0.47	0.35	0.44	0.06	0.01	0.0	2.32
WNW	0.27	0.70	0.36	0.34	0.51	0.03	0.0	0.0	2.21
NW	0.18	0.93	0.63	0.74	0.83	0.07	0.0	0.0	3.38
NNW	0.27	1.55	1.23	0.93	0.99	0.04	0.0	0.0	5.01
SUBTOTAL	6.04	36.24	26.65	15.58	13.76	1.21	0.07	0.0	99.55

TOTAL HOURS OF VALID WIND OBSERVATIONS 32338
TOTAL HOURS OF OBSERVATIONS 35064
RECOVERABILITY PERCENTAGE 92.2
TOTAL HOURS CALM 140 = 0.43 percent

ALL COLUMNS AND CALM TOTAL 100 PERCENT OF JOINT VALID OBSERVATIONS

METEOROLOGICAL FACILITY located 1.2 km southwest of Sequoyah Nuclear Plant
WIND SPEED AND DIRECTION MEASURED AT THE 9.73 METER LEVEL

MEAN WIND SPEED = 4.6 MPH

TABLE 2.3.2-2

JOINT PERCENTAGE FREQUENCIES OF WIND SPEED BY DIRECTION

DISREGARDING STABILITY CLASS

SEQUOYAH NUCLEAR PLANT

JANUARY (72-75)

WIND DIRECTION	WIND SPEED (MPH) 0.6-1.4	1.5-3.4	3.5-5.4	5.5-7.4	7.5-12.4	12.5-18.4	18.5-24.4	>=24.5	Total
N	0.61	2.27	1.29	0.68	1.21	0.0	0.0	0.0	6.06
NNE	1.59	5.04	5.04	2.46	2.20	0.04	0.0	0.0	16.37
NE	0.68	4.81	2.77	0.95	2.27	0.27	0.0	0.0	11.75
ENE	0.34	1.25	0.30	0.11	0.0	0.0	0.0	0.0	2.00
E	0.45	0.87	0.15	0.27	0.04	0.0	0.0	0.0	1.78
ESE	0.38	0.49	0.0	0.0	0.0	0.0	0.0	0.0	0.87
SE	0.27	0.38	0.0	0.0	0.0	0.0	0.0	0.0	0.65
SSE	0.42	0.64	0.27	0.04	0.19	0.11	0.23	0.0	1.90
S	0.27	1.89	1.17	0.98	1.74	0.11	0.0	0.0	6.16
SSW	0.30	3.07	4.02	3.67	5.15	0.42	0.0	0.0	16.63
SW	0.30	3.45	5.49	3.45	2.65	0.68	0.0	0.0	16.02
WSW	0.30	2.01	1.55	0.87	1.29	0.42	0.0	0.0	6.44
W	0.15	0.83	0.42	0.45	0.42	0.0	0.0	0.0	2.27
WNW	0.11	0.42	0.30	0.08	0.38	0.04	0.0	0.0	1.33
NW	0.30	0.45	0.61	0.49	0.53	0.0	0.0	0.0	2.38
NNW	0.49	1.10	1.06	1.25	2.39	0.04	0.0	0.0	6.33
SUBTOTAL	6.96	28.97	24.44	15.75	20.46	2.13	0.23	0.0	98.94

TOTAL HOURS OF VALID WIND OBSERVATIONS 2640
TOTAL HOURS OF OBSERVATIONS 2976
RECOVERABILITY PERCENTAGE 88.7
TOTAL HOURS CALM 28 = 1.1 percent

ALL COLUMNS AND CALM TOTAL 100 PERCENT OF JOINT VALID OBSERVATIONS

METEOROLOGICAL FACILITY located 1.2 km southwest of Sequoyah Nuclear Plant
WIND SPEED AND DIRECTION MEASURED AT THE 9.73 METER LEVEL

MEAN WIND SPEED = 5.2 MPH

TABLE 2.3.2-3

JOINT PERCENTAGE FREQUENCIES OF WIND SPEED BY DIRECTION

DISREGARDING STABILITY CLASS

SEQUOYAH NUCLEAR PLANT

FEBRUARY (72-75)

WIND DIRECTION	WIND SPEED (MPH) 0.6-1.4	1.5-3.4	3.5-5.4	5.5-7.4	7.5-12.4	12.5-18.4	18.5-24.4	>=24.5	Total
N	0.20	2.19	1.75	1.04	0.92	0.04	0.0	0.0	6.14
NNE	0.68	5.77	4.22	1.99	3.07	0.44	0.0	0.0	16.17
NE	0.48	4.62	2.91	0.96	1.15	0.36	0.0	0.0	10.48
ENE	0.48	2.35	0.52	0.28	0.04	0.08	0.0	0.0	3.75
E	0.56	0.80	0.20	0.12	0.16	0.08	0.0	0.0	1.92
ESE	0.28	0.56	0.12	0.12	0.12	0.28	0.0	0.0	1.48
SE	0.24	0.44	0.16	0.12	0.28	0.04	0.0	0.0	1.28
SSE	0.32	0.60	0.36	0.20	0.56	0.12	0.04	0.0	2.20
S	0.32	1.71	1.63	0.80	0.92	0.08	0.0	0.0	5.46
SSW	0.16	2.79	4.10	2.67	3.42	0.24	0.0	0.0	13.38
SW	0.28	3.07	4.54	3.82	2.99	0.56	0.0	0.0	15.26
WSW	0.20	1.83	1.55	1.12	0.60	0.12	0.0	0.0	5.42
W	0.12	0.60	0.44	0.64	0.76	0.04	0.0	0.0	2.60
WNW	0.28	0.44	0.52	0.76	1.27	0.04	0.0	0.0	3.31
NW	0.04	0.64	0.72	1.67	1.83	0.16	0.04	0.0	5.10
NNW	0.0	1.00	1.51	1.43	1.59	0.16	0.04	0.0	5.73
SUBTOTAL	4.64	29.41	25.25	17.74	19.68	2.84	0.12	0.0	99.68

TOTAL HOURS OF VALID WIND OBSERVATIONS 2511
TOTAL HOURS OF OBSERVATIONS 2712
RECOVERABILITY PERCENTAGE 92.6
TOTAL HOURS CALM 10 = 0.40 percent

ALL COLUMNS AND CALM TOTAL 100 PERCENT OF JOINT VALID OBSERVATIONS

METEOROLOGICAL FACILITY located 1.2 km southwest of Sequoyah Nuclear Plant
WIND SPEED AND DIRECTION MEASURED AT THE 9.73 METER LEVEL

MEAN WIND SPEED = 5.3 MPH

TABLE 2.3.2-4

JOINT PERCENTAGE FREQUENCIES OF WIND SPEED BY DIRECTION

DISREGARDING STABILITY CLASS

SEQUOYAH NUCLEAR PLANT

MARCH (72-75)

WIND DIRECTION	0.6-1.4	1.5-3.4	3.5-5.4	WIND SPEED (MPH) 5.5-7.4	7.5-12.4	12.5-18.4	18.5-24.4	>=24.5	Total
N	0.18	2.09	1.70	0.85	0.57	0.0	0.0	0.0	5.39
NNE	0.39	5.87	4.85	1.95	2.94	0.14	0.0	0.0	16.14
NE	0.25	3.64	2.76	0.99	0.32	0.04	0.0	0.0	8.00
ENE	0.18	2.05	0.50	0.07	0.0	0.0	0.0	0.0	2.80
E	0.28	0.67	0.11	0.0	0.0	0.0	0.0	0.0	1.06
ESE	0.14	0.28	0.14	0.04	0.0	0.0	0.0	0.0	0.60
SE	0.18	0.32	0.18	0.0	0.0	0.0	0.0	0.0	0.68
SSE	0.25	0.67	0.46	0.42	0.67	0.07	0.04	0.0	2.54
S	0.42	1.45	1.27	1.49	3.89	0.42	0.0	0.0	8.94
SSW	0.21	2.58	3.93	3.61	5.80	0.88	0.0	0.0	17.01
SW	0.21	2.55	5.20	2.69	1.73	0.35	0.0	0.0	12.73
WSW	0.18	1.59	1.38	0.64	0.85	0.35	0.11	0.0	5.10
W	0.14	0.71	0.74	0.28	1.42	0.28	0.14	0.0	3.71
WNW	0.04	0.50	0.35	0.71	1.31	0.11	0.04	0.0	3.06
NW	0.04	0.88	0.64	1.45	2.16	0.21	0.0	0.0	5.38
NNW	0.21	1.13	1.95	1.63	1.70	0.18	0.0	0.0	6.80
SUBTOTAL	3.30	26.98	26.16	16.82	23.36	3.03	0.29	0.0	99.94

TOTAL HOURS OF VALID WIND OBSERVATIONS 2826
TOTAL HOURS OF OBSERVATIONS 2976
RECOVERABILITY PERCENTAGE 95.0
TOTAL HOURS CALM 2 = 0.07 percent

ALL COLUMNS AND CALM TOTAL 100 PERCENT OF JOINT VALID OBSERVATIONS

METEOROLOGICAL FACILITY located 1.2 km southwest of Sequoyah Nuclear Plant
WIND SPEED AND DIRECTION MEASURED AT THE 9.73 METER LEVEL

MEAN WIND SPEED = 5.7 MPH

TABLE 2.3.2-5

JOINT PERCENTAGE FREQUENCIES OF WIND SPEED BY DIRECTION

DISREGARDING STABILITY CLASS

SEQUOYAH NUCLEAR PLANT

APRIL (72-75)

WIND DIRECTION	WIND SPEED (MPH) 0.6-1.4	1.5-3.4	3.5-5.4	5.5-7.4	7.5-12.4	12.5-18.4	18.5-24.4	>=24.5	Total
N	0.04	1.34	0.81	0.81	1.00	0.0	0.0	0.0	4.00
NNE	0.19	4.99	3.30	2.19	1.69	0.08	0.0	0.0	12.44
NE	0.12	4.41	2.49	1.69	2.26	0.04	0.0	0.0	11.01
ENE	0.19	1.53	0.19	0.12	0.0	0.0	0.0	0.0	2.03
E	0.15	0.73	0.12	0.0	0.0	0.0	0.0	0.0	1.00
ESE	0.23	0.12	0.12	0.0	0.0	0.0	0.0	0.0	0.47
SE	0.08	0.46	0.23	0.0	0.0	0.0	0.0	0.0	0.77
SSE	0.35	1.04	0.27	0.58	1.53	0.23	0.0	0.0	4.00
S	0.46	1.50	1.38	2.46	3.03	0.46	0.0	0.0	9.29
SSW	0.27	2.95	4.22	3.38	5.45	0.07	0.0	0.0	17.34
SW	0.15	2.23	4.87	3.68	5.87	0.46	0.15	0.0	17.41
WSW	0.04	1.61	1.34	0.92	1.65	0.73	0.12	0.0	6.41
W	0.04	0.31	0.42	0.61	0.69	0.31	0.0	0.0	2.38
WNW	0.08	0.54	0.73	0.50	1.27	0.12	0.0	0.0	3.24
NW	0.12	0.46	0.73	0.96	1.42	0.23	0.0	0.0	3.92
NNW	0.0	0.54	0.77	1.11	1.73	0.08	0.0	0.0	4.23
SUBTOTAL	2.51	24.76	21.99	19.01	27.59	3.81	0.27	0.0	99.94

TOTAL HOURS OF VALID WIND OBSERVATIONS 2606
TOTAL HOURS OF OBSERVATIONS 2880
RECOVERABILITY PERCENTAGE 90.5
TOTAL HOURS CALM 3 = 0.12 percent

ALL COLUMNS AND CALM TOTAL 100 PERCENT OF JOINT VALID OBSERVATIONS

METEOROLOGICAL FACILITY located 1.2 km southwest of Sequoyah Nuclear Plant
WIND SPEED AND DIRECTION MEASURED AT THE 9.73 METER LEVEL

MEAN WIND SPEED = 6.0 MPH

TABLE 2.3.2-6

JOINT PERCENTAGE FREQUENCIES OF WIND SPEED BY DIRECTION

DISREGARDING STABILITY CLASS

SEQUOYAH NUCLEAR PLANT

MAY (72-75)

WIND DIRECTION	WIND SPEED (MPH) 0.6-1.4	1.5-3.4	3.5-5.4	5.5-7.4	7.5-12.4	12.5-18.4	18.5-24.4	>=24.5	Total
N	0.45	3.18	1.89	0.63	0.24	0.0	0.0	0.0	6.39
NNE	0.77	8.00	4.75	2.58	1.19	0.08	0.0	0.0	17.29
NE	0.52	3.35	2.79	1.29	0.56	0.04	0.0	0.0	8.51
ENE	0.31	1.75	0.66	0.03	0.0	0.0	0.0	0.0	2.75
E	0.49	1.36	0.21	0.0	0.0	0.0	0.0	0.0	2.06
ESE	0.52	0.52	0.07	0.0	0.0	0.0	0.0	0.0	1.11
SE	0.36	1.12	0.24	0.0	0.0	0.0	0.0	0.0	1.74
SSE	0.52	2.10	0.66	0.14	0.14	0.03	0.0	0.0	3.59
S	0.42	3.25	3.35	2.34	2.03	0.21	0.0	0.0	11.60
SSW	0.31	4.83	6.53	3.39	2.58	0.10	0.0	0.0	17.80
SW	0.10	4.40	4.02	2.27	1.22	0.10	0.03	0.0	12.14
WSW	0.17	1.50	1.12	0.49	0.42	0.03	0.0	0.0	3.73
W	0.31	0.66	0.45	0.21	0.07	0.0	0.0	0.0	1.70
WNW	0.31	0.63	0.24	0.21	0.14	0.0	0.0	0.0	1.53
NW	0.24	0.98	0.73	0.49	0.77	0.03	0.0	0.0	3.24
NNW	0.14	1.47	1.05	0.52	0.94	0.03	0.0	0.0	4.15
SUBTOTAL	5.96	39.16	28.76	14.59	10.30	0.53	0.03	0.0	99.33

TOTAL HOURS OF VALID WIND OBSERVATIONS 2863
TOTAL HOURS OF OBSERVATIONS 2976
RECOVERABILITY PERCENTAGE 96.2
TOTAL HOURS CALM 16 = 0.56 percent

ALL COLUMNS AND CALM TOTAL 100 PERCENT OF JOINT VALID OBSERVATIONS

METEOROLOGICAL FACILITY located 1.2 km southwest of Sequoyah Nuclear Plant
WIND SPEED AND DIRECTION MEASURED AT THE 9.73 METER LEVEL

MEAN WIND SPEED = 4.3 MPH

TABLE 2.3.2-7

JOINT PERCENTAGE FREQUENCIES OF WIND SPEED BY DIRECTION

DISREGARDING STABILITY CLASS

SEQUOYAH NUCLEAR PLANT

JUNE (72-75)

WIND DIRECTION	0.6-1.4	1.5-3.4	3.5-5.4	WIND SPEED (MPH) 5.5-7.4	7.5-12.4	12.5-18.4	18.5-24.4	>=24.5	Total
N	0.55	3.19	1.46	0.24	0.0	0.0	0.0	0.0	5.44
NNE	1.26	7.60	3.94	2.36	1.06	0.04	0.0	0.0	16.26
NE	0.43	2.28	1.69	0.24	0.0	0.0	0.0	0.0	4.64
ENE	0.63	1.85	0.63	0.31	0.0	0.0	0.0	0.0	3.42
E	0.55	0.47	0.12	0.0	0.0	0.0	0.0	0.0	1.14
ESE	0.43	0.59	0.04	0.0	0.0	0.0	0.0	0.0	1.06
SE	0.39	1.38	0.12	0.0	0.0	0.0	0.0	0.0	1.89
SSE	0.43	1.46	1.14	0.16	0.16	0.0	0.0	0.0	3.35
S	0.71	4.05	3.78	2.44	1.18	0.04	0.0	0.0	12.20
SSW	0.35	5.75	6.26	4.76	1.42	0.04	0.0	0.0	18.58
SW	0.47	4.92	5.94	3.11	1.14	0.0	0.0	0.04	15.62
WSW	0.35	1.57	1.06	0.67	0.51	0.0	0.0	0.0	4.16
W	0.43	1.02	0.43	0.39	0.39	0.0	0.0	0.0	2.66
WNW	0.47	0.83	0.24	0.24	0.16	0.0	0.0	0.0	1.94
NW	0.08	0.67	0.83	0.67	1.02	0.0	0.0	0.0	3.27
NNW	0.39	1.34	1.26	0.51	0.31	0.0	0.0	0.0	3.81
SUBTOTAL	7.92	38.97	28.94	16.10	7.35	0.12	0.0	0.04	99.44

TOTAL HOURS OF VALID WIND OBSERVATIONS 2541
TOTAL HOURS OF OBSERVATIONS 2880
RECOVERABILITY PERCENTAGE 88.2
TOTAL HOURS CALM 14 = 0.55 percent

ALL COLUMNS AND CALM TOTAL 100 PERCENT OF JOINT VALID OBSERVATIONS

METEOROLOGICAL FACILITY located 1.2 km southwest of Sequoyah Nuclear Plant
WIND SPEED AND DIRECTION MEASURED AT THE 9.73 METER LEVEL

MEAN WIND SPEED = 4.0 MPH

TABLE 2.3.2-8

JOINT PERCENTAGE FREQUENCIES OF WIND SPEED BY DIRECTION

DISREGARDING STABILITY CLASS

SEQUOYAH NUCLEAR PLANT

JULY (72-75)

WIND DIRECTION	WIND SPEED (MPH) 0.6-1.4	1.5-3.4	3.5-5.4	5.5-7.4	7.5-12.4	12.5-18.4	18.5-24.4	>=24.5	Total
N	0.25	4.46	1.55	0.18	0.07	0.0	0.0	0.0	6.51
NNE	0.68	9.72	4.50	1.76	0.50	0.0	0.0	0.0	17.16
NE	0.18	1.62	1.98	0.68	0.0	0.0	0.0	0.0	4.46
ENE	0.25	1.44	0.43	0.07	0.0	0.0	0.0	0.0	2.19
E	0.47	0.79	0.0	0.0	0.0	0.0	0.0	0.0	1.26
ESE	0.22	0.68	0.07	0.0	0.0	0.0	0.0	0.0	0.97
SE	0.43	1.73	0.47	0.0	0.0	0.0	0.0	0.0	2.63
SSE	0.40	2.20	0.90	0.25	0.11	0.0	0.0	0.0	3.86
S	0.79	5.11	3.92	0.97	0.40	0.0	0.0	0.0	11.19
SSW	0.40	5.94	8.32	4.43	0.86	0.0	0.0	0.0	19.95
SW	0.29	4.86	5.83	3.38	1.12	0.0	0.0	0.0	15.48
WSW	0.40	1.94	0.90	0.29	0.04	0.0	0.0	0.0	3.57
W	0.25	1.26	0.32	0.18	0.0	0.0	0.0	0.0	2.01
WNW	0.32	1.26	0.43	0.25	0.07	0.0	0.0	0.0	2.33
NW	0.25	1.98	0.65	0.22	0.0	0.0	0.0	0.0	3.10
NNW	0.22	2.38	0.54	0.18	0.0	0.0	0.0	0.0	3.32
SUBTOTAL	5.80	47.37	30.81	12.84	3.17	0.0	0.0	0.04	99.99

TOTAL HOURS OF VALID WIND OBSERVATIONS 2778
TOTAL HOURS OF OBSERVATIONS 2976
RECOVERABILITY PERCENTAGE 93.3
TOTAL HOURS CALM 0 = 0.00 percent

ALL COLUMNS AND CALM TOTAL 100 PERCENT OF JOINT VALID OBSERVATIONS

METEOROLOGICAL FACILITY located 1.2 km southwest of Sequoyah Nuclear Plant
WIND SPEED AND DIRECTION MEASURED AT THE 9.73 METER LEVEL

MEAN WIND SPEED = 3.7 MPH

TABLE 2.3.2-9

JOINT PERCENTAGE FREQUENCIES OF WIND SPEED BY DIRECTION

DISREGARDING STABILITY CLASS

SEQUOYAH NUCLEAR PLANT

AUGUST (72-75)

WIND DIRECTION	WIND SPEED (MPH) 0.6-1.4	1.5-3.4	3.5-5.4	5.5-7.4	7.5-12.4	12.5-18.4	18.5-24.4	>=24.5	Total
N	0.45	5.35	1.40	0.35	0.03	0.0	0.0	0.0	7.58
NNE	1.08	12.81	5.39	2.27	0.59	0.0	0.0	0.0	22.14
NE	0.42	2.97	2.27	0.21	0.17	0.0	0.0	0.0	6.04
ENE	0.59	1.47	0.35	0.03	0.0	0.0	0.0	0.0	2.44
E	0.56	0.77	0.07	0.0	0.0	0.0	0.0	0.0	1.40
ESE	0.35	0.38	0.0	0.0	0.0	0.0	0.0	0.0	0.73
SE	0.21	1.33	0.14	0.0	0.0	0.0	0.0	0.0	1.68
SSE	0.35	1.92	0.84	0.10	0.14	0.0	0.0	0.0	3.35
S	0.42	3.92	4.02	2.52	0.45	0.0	0.0	0.0	11.33
SSW	0.17	4.83	6.33	3.95	0.94	0.0	0.0	0.0	16.22
SW	0.42	4.58	3.81	3.29	0.87	0.0	0.0	0.0	12.97
WSW	0.31	2.03	1.01	0.21	0.14	0.0	0.0	0.0	3.70
W	0.31	0.87	0.24	0.10	0.0	0.0	0.0	0.0	1.52
WNW	0.56	0.98	0.21	0.0	0.0	0.0	0.0	0.0	1.75
NW	0.28	1.22	0.35	0.35	0.03	0.0	0.0	0.0	2.23
NNW	0.38	2.62	1.29	0.42	0.03	0.0	0.0	0.0	4.74
SUBTOTAL	6.86	48.05	27.72	13.80	3.39	0.0	0.0	0.0	99.82

TOTAL HOURS OF VALID WIND OBSERVATIONS 2858
TOTAL HOURS OF OBSERVATIONS 2976
RECOVERABILITY PERCENTAGE 96.0
TOTAL HOURS CALM 1 = 0.03 percent

ALL COLUMNS AND CALM TOTAL 100 PERCENT OF JOINT VALID OBSERVATIONS

METEOROLOGICAL FACILITY located 1.2 km southwest of Sequoyah Nuclear Plant
WIND SPEED AND DIRECTION MEASURED AT THE 9.73 METER LEVEL

MEAN WIND SPEED = 3.6 MPH

TABLE 2.3.2-10

JOINT PERCENTAGE FREQUENCIES OF WIND SPEED BY DIRECTION

DISREGARDING STABILITY CLASS

SEQUOYAH NUCLEAR PLANT

SEPT. (72-75)

WIND DIRECTION	WIND SPEED (MPH) 0.6-1.4	1.5-3.4	3.5-5.4	5.5-7.4	7.5-12.4	12.5-18.4	18.5-24.4	>=24.5	Total
N	0.99	5.27	1.99	0.77	0.52	0.0	0.0	0.0	9.54
NNE	0.92	12.04	6.15	2.98	3.98	0.07	0.04	0.0	26.18
NE	0.52	3.50	2.25	0.70	0.33	0.04	0.0	0.0	7.34
ENE	0.44	1.10	0.33	0.0	0.0	0.0	0.0	0.0	1.87
E	0.85	0.85	0.15	0.04	0.0	0.0	0.0	0.0	1.89
ESE	0.44	0.44	0.11	0.04	0.0	0.0	0.0	0.0	1.03
SE	0.70	1.25	0.33	0.0	0.0	0.0	0.0	0.0	2.28
SSE	0.48	1.77	0.63	0.04	0.07	0.0	0.0	0.0	2.99
S	0.63	3.83	3.53	1.66	1.07	0.0	0.0	0.0	10.72
SSW	0.29	3.35	4.71	2.84	0.74	0.0	0.0	0.0	11.93
SW	0.33	2.69	4.31	1.91	0.66	0.0	0.0	0.0	9.90
WSW	0.44	1.55	0.63	0.22	0.0	0.0	0.0	0.0	2.84
W	0.29	0.81	0.29	0.0	0.04	0.0	0.0	0.0	1.43
WNW	0.63	0.88	0.18	0.07	0.04	0.0	0.0	0.0	1.80
NW	0.33	1.33	0.22	0.26	0.11	0.0	0.0	0.0	2.25
NNW	0.37	2.25	1.88	0.74	0.37	0.0	0.0	0.0	5.61
SUBTOTAL	8.65	42.91	27.69	12.27	7.93	0.11	0.04	0.0	99.60

TOTAL HOURS OF VALID WIND OBSERVATIONS 2716
TOTAL HOURS OF OBSERVATIONS 2880
RECOVERABILITY PERCENTAGE 94.3
TOTAL HOURS CALM 12 = 0.44 percent

ALL COLUMNS AND CALM TOTAL 100 PERCENT OF JOINT VALID OBSERVATIONS

METEOROLOGICAL FACILITY located 1.2 km southwest of Sequoyah Nuclear Plant
WIND SPEED AND DIRECTION MEASURED AT THE 9.73 METER LEVEL

MEAN WIND SPEED = 3.9 MPH

TABLE 2.3.2-11

JOINT PERCENTAGE FREQUENCIES OF WIND SPEED BY DIRECTION

DISREGARDING STABILITY CLASS

SEQUOYAH NUCLEAR PLANT

OCTOBER (72-75)

WIND DIRECTION	WIND SPEED (MPH) 0.6-1.4	1.5-3.4	3.5-5.4	5.5-7.4	7.5-12.4	12.5-18.4	18.5-24.4	>=24.5	Total
N	1.69	4.31	2.06	0.71	0.45	0.0	0.0	0.0	9.22
NNE	1.20	11.55	6.90	3.30	3.83	0.26	0.0	0.0	27.04
NE	1.01	5.63	2.81	1.05	0.34	0.0	0.0	0.0	10.84
ENE	0.75	1.91	0.15	0.0	0.0	0.0	0.0	0.0	2.81
E	0.71	0.98	0.04	0.0	0.0	0.0	0.0	0.0	1.73
ESE	0.49	0.45	0.0	0.0	0.0	0.0	0.0	0.0	0.94
SE	0.79	0.53	0.08	0.0	0.0	0.0	0.0	0.0	1.40
SSE	0.86	1.28	0.34	0.30	0.15	0.0	0.0	0.0	2.93
S	0.34	3.49	2.10	0.75	0.34	0.0	0.0	0.0	7.02
SSW	0.41	3.86	2.63	1.50	0.56	0.0	0.0	0.0	8.96
SW	0.41	3.75	4.09	2.21	0.60	0.0	0.0	0.0	11.06
WSW	0.23	1.95	1.28	0.83	0.49	0.0	0.0	0.0	4.78
W	0.19	1.13	0.60	0.41	0.15	0.0	0.0	0.0	2.48
WNW	0.34	0.60	0.23	0.34	0.04	0.0	0.0	0.0	1.55
NW	0.23	0.49	0.56	0.56	0.11	0.0	0.0	0.0	1.95
NNW	0.56	1.58	0.90	0.71	0.30	0.0	0.0	0.0	4.05
SUBTOTAL	10.21	43.49	24.77	12.67	7.36	0.26	0.0	0.0	98.76

TOTAL HOURS OF VALID WIND OBSERVATIONS 2666
TOTAL HOURS OF OBSERVATIONS 2976
RECOVERABILITY PERCENTAGE 89.6
TOTAL HOURS CALM 34 = 1.28 percent

ALL COLUMNS AND CALM TOTAL 100 PERCENT OF JOINT VALID OBSERVATIONS

METEOROLOGICAL FACILITY located 1.2 km southwest of Sequoyah Nuclear Plant
WIND SPEED AND DIRECTION MEASURED AT THE 9.73 METER LEVEL

MEAN WIND SPEED = 3.9 MPH

TABLE 2.3.2-12

JOINT PERCENTAGE FREQUENCIES OF WIND SPEED BY DIRECTION

DISREGARDING STABILITY CLASS

SEQUOYAH NUCLEAR PLANT

NOVEMBER (72-75)

WIND DIRECTION	WIND SPEED (MPH) 0.6-1.4	1.5-3.4	3.5-5.4	5.5-7.4	7.5-12.4	12.5-18.4	18.5-24.4	>=24.5	Total
N	0.48	2.85	2.15	0.85	0.37	0.0	0.0	0.0	6.70
NNE	0.70	8.66	6.77	3.18	2.81	0.22	0.0	0.0	22.34
NE	0.55	5.11	3.44	1.44	1.41	0.07	0.0	0.0	12.02
ENE	0.44	1.07	0.48	0.04	0.0	0.0	0.0	0.0	2.03
E	0.55	0.78	0.18	0.0	0.0	0.0	0.0	0.0	1.51
ESE	0.33	0.26	0.18	0.0	0.0	0.0	0.0	0.0	0.77
SE	0.22	0.26	0.18	0.0	0.0	0.0	0.0	0.0	0.66
SSE	0.30	0.92	0.37	0.18	0.41	0.15	0.0	0.0	2.33
S	0.37	1.92	1.70	1.70	1.78	0.22	0.0	0.0	7.69
SSW	0.33	2.07	3.29	3.74	3.70	0.07	0.0	0.0	13.20
SW	0.37	2.48	4.29	2.85	2.00	0.07	0.0	0.0	12.06
WSW	0.11	1.15	1.48	0.78	0.92	0.07	0.0	0.0	4.51
W	0.11	0.33	0.67	0.48	0.67	0.0	0.0	0.0	2.26
WNW	0.04	0.44	0.26	0.26	0.92	0.04	0.0	0.0	1.96
NW	0.07	0.81	1.04	0.92	1.04	0.15	0.0	0.0	4.03
NNW	0.26	1.52	1.29	1.18	0.96	0.0	0.0	0.0	5.21
SUBTOTAL	5.23	30.63	27.77	17.60	16.99	1.06	0.0	0.0	99.28

TOTAL HOURS OF VALID WIND OBSERVATIONS 2703
TOTAL HOURS OF OBSERVATIONS 2880
RECOVERABILITY PERCENTAGE 93.9
TOTAL HOURS CALM 18 = 0.67 percent

ALL COLUMNS AND CALM TOTAL 100 PERCENT OF JOINT VALID OBSERVATIONS

METEOROLOGICAL FACILITY located 1.2 km southwest of Sequoyah Nuclear Plant
WIND SPEED AND DIRECTION MEASURED AT THE 9.73 METER LEVEL

MEAN WIND SPEED = 4.9 MPH

TABLE 2.3.2-13

JOINT PERCENTAGE FREQUENCIES OF WIND SPEED BY DIRECTION

DISREGARDING STABILITY CLASS

SEQUOYAH NUCLEAR PLANT

DECEMBER (72-75)

WIND DIRECTION	WIND SPEED (MPH) 0.6-1.4	1.5-3.4	3.5-5.4	5.5-7.4	7.5-12.4	12.5-18.4	18.5-24.4	>=24.5	Total
N	0.23	1.56	1.44	1.03	1.63	0.0	0.0	0.0	5.89
NNE	0.42	7.00	4.64	2.47	2.47	0.04	0.0	0.0	17.04
NE	0.57	4.56	2.89	2.02	1.25	0.0	0.0	0.0	11.29
ENE	0.42	1.25	0.11	0.08	0.0	0.0	0.0	0.0	1.86
E	0.34	0.49	0.0	0.0	0.0	0.0	0.0	0.0	0.83
ESE	0.15	0.57	0.04	0.0	0.0	0.0	0.0	0.0	0.76
SE	0.23	0.57	0.11	0.0	0.0	0.0	0.0	0.0	0.91
SSE	0.27	0.60	0.30	0.30	0.19	0.0	0.0	0.0	2.66
S	0.49	2.43	1.83	0.80	1.52	0.11	0.0	0.0	7.18
SSW	0.30	3.23	4.30	3.27	3.54	0.11	0.0	0.0	14.75
SW	0.27	3.57	5.21	3.73	2.62	0.27	0.0	0.0	15.67
WSW	0.08	1.41	1.03	0.99	1.52	0.27	0.0	0.0	5.30
W	0.11	0.76	0.57	0.46	0.72	0.11	0.0	0.0	2.73
WNW	0.04	0.87	0.68	0.68	0.61	0.0	0.0	0.0	2.88
NW	0.15	1.10	0.57	0.91	0.99	0.08	0.0	0.04	3.84
NNW	0.23	1.52	1.29	1.56	1.67	0.04	0.0	0.0	6.31
SUBTOTAL	4.30	32.49	25.01	18.30	18.73	1.03	0.0	0.04	99.90

TOTAL HOURS OF VALID WIND OBSERVATIONS 2630
TOTAL HOURS OF OBSERVATIONS 2952
RECOVERABILITY PERCENTAGE 89.1
TOTAL HOURS CALM 2 = 0.08 percent

ALL COLUMNS AND CALM TOTAL 100 PERCENT OF JOINT VALID OBSERVATIONS

METEOROLOGICAL FACILITY located 1.2 km southwest of Sequoyah Nuclear Plant
WIND SPEED AND DIRECTION MEASURED AT THE 9.73 METER LEVEL

MEAN WIND SPEED = 5.1 MPH

TABLE 2.3.2-14 (Sheet 1)

WIND DIRECTION PERSISTENCE DATA
DISREGARDING STABILITY
SEQUOYAH NUCLEAR PLANT
JAN 1, 72 - DEC 31, 75

LOST RECORD(%)= 7.77

PERSISTENCE (HOURS)	WIND DIRECTION N	NNE	NE	ENE	E	ESE	SE	SSE	S	SSW	SW	WSW	W	WNW	NW	NNW	CALM	ACC. TOTAL	ACC. TOTAL	FREQUENCY
2	190	277	205	82	39	18	38	86	253	333	360	123	62	58	94	138	14	2370	5804	100.00
3	99	163	106	23	10	10	9	33	107	187	179	45	21	26	38	54	9	1119	3434	59.17
4	47	135	66	11	3	0	5	11	80	120	128	33	17	10	20	25	1	712	2315	39.89
5	20	89	33	6	2	1	3	3	43	77	87	21	8	10	17	22	2	444	1603	27.62
6	10	65	27	3	1	0	0	0	29	57	53	11	3	1	9	15	1	285	1159	19.97
7	13	45	14	1	1	0	0	5	20	51	43	6	1	3	7	14	0	224	874	15.06
8	9	40	18	0	0	0	0	4	8	29	18	3	4	1	5	10	0	149	650	11.20
9	6	36	10	1	0	0	0	1	8	25	15	3	1	1	2	8	0	117	501	8.63
10	3	32	8	0	0	0	0	0	6	16	10	0	0	0	3	3	0	81	384	6.62
11	0	29	7	1	0	0	0	0	4	10	5	1	1	0	3	2	0	63	303	5.22
12	0	17	8	1	0	0	0	0	5	12	5	2	0	0	2	2	0	54	240	4.14
13	3	16	1	0	0	0	0	0	2	11	6	0	0	0	0	0	0	39	186	3.20
14	0	15	3	0	0	0	0	0	3	6	7	0	0	0	0	1	0	35	147	2.53
15	0	9	2	0	0	0	0	0	1	4	3	0	1	0	0	1	0	20	112	1.93
16	0	6	3	0	0	0	0	0	0	3	4	0	0	0	1	1	0	18	92	1.59
17	0	11	3	0	0	0	0	0	1	2	1	0	0	0	2	0	0	20	74	1.27
18	0	8	0	0	0	0	0	0	0	3	1	0	0	1	0	0	0	13	54	0.93
19	0	5	1	0	0	0	0	0	1	1	1	0	0	0	0	1	0	10	41	0.71
20	0	3	1	0	0	0	0	0	0	3	0	1	0	0	0	0	0	8	31	0.53
21	0	2	0	0	0	0	0	0	1	1	0	0	0	0	0	0	0	4	23	0.40
22	0	0	0	0	0	0	0	0	0	0	0	0	0	0	0	0	0	0	19	0.33
23	0	1	1	0	0	0	0	0	0	0	0	0	0	0	0	0	0	2	19	0.33
24	0	1	0	0	0	0	0	0	0	0	0	0	0	0	0	0	0	1	17	0.29
25	0	2	1	0	0	0	0	0	0	0	1	0	0	0	0	0	0	4	16	0.28
26	0	1	1	0	0	0	0	0	0	0	0	0	0	0	0	0	0	2	12	0.21
27	0	0	0	0	0	0	0	0	0	0	0	0	0	0	0	0	0	0	10	0.17
28	0	1	0	0	0	0	0	0	0	0	0	0	0	0	0	0	0	1	10	0.17
29	1	1	0	0	0	0	0	0	0	0	0	0	0	0	0	0	0	2	9	0.16
30	0	1	0	0	0	0	0	0	0	0	0	0	0	0	0	0	0	1	7	0.12
31	0	2	0	0	0	0	0	0	0	0	0	0	0	0	0	0	0	2	6	0.10
32	0	2	0	0	0	0	0	0	0	0	1	0	0	0	0	0	0	3	4	0.07
>32	0	1	0	0	0	0	0	0	0	0	0	0	0	0	0	0	0	1	1	0.02
TOTAL	401	1015	519	129	56	29	55	143	572	951	928	249	119	111	203	297	27	5804		

TABLE 2.3.2-14 (Sheet 2)
(Continued)

WIND DIRECTION PERSISTENCE DATA

DISREGARDING STABILITY

SEQUOYAH NUCLEAR PLANT

JAN 1, 72 - DEC 31, 75

LOST RECORD(%)= 7.77

PERSISTENCE (HOURS)	WIND DIRECTION N	NNE	NE	ENE	E	ESE	SE	SSE	S	SSW	SW	WSW	W	WNW	NW	NNW	CALM
MAXIMUM PERSISTENCE (HOURS)	29	33	26	12	7	5	5	9	12	21	32	20	15	18	17	19	6
50.0%	3	4	3	2	2	2	2	2	3	3	3	3	2	2	3	3	2
80.0%	4	8	6	3	3	3	3	3	5	6	5	4	4	4	5	5	3
90.0%	6	12	8	5	4	3	4	4	7	9	7	6	5	5	7	7	5
99.0%	10	25	17	11	7	5	5	8	14	17	15	12	11	9	16	15	6
99.9%	29	32	26	12	7	5	5	9	21	21	32	20	15	18	17	17	6

METEOROLOGICAL FACILITY located 1.2 km southwest of Sequoyah Nuclear Plant
WIND SPEED AND DIRECTION MEASURED AT THE 9.73 METER LEVEL

NOTE: Persistent wind is defined in this analysis as a wind blowing continuously from one of the named 22-1/2° sectors (i.e., north-northwest) except that it is not considered to be interrupted if it departs from that sector for one hour and then returns, or if there are up to two hours of missing data followed by a continued directional persistence.

Table 2.3.2-15

TEMPERATURE*

Sequoyah Nuclear Plant
April 2, 1971-March 31, 1972

Month	Avg. Temp. °F	Avg. Max. Temp. °F	Avg. Min. Temp. °F	Extreme Max Temp. °F	Extreme Min. Temp. °F
Dec.	49.0	56.2	42.3	72.0	23.3
Jan.	42.7	52.2	33.5	71.3	2.9
Feb.	40.1	49.7	30.8	74.8	15.2
Winter	43.9	52.7	35.5	74.8	2.9
Mar.	48.7	59.3	38.6	75.8	26.4
Apr.	59.2	72.8	45.9	86.0	33.1
May	64.6	75.8	54.2	84.9	38.2
Spring	57.5	69.3	46.2	86.0	26.4
June	75.4	86.7	66.6	96.3	55.3
July	75.4	83.4	68.7	90.8	61.8
August	75.5	86.1	68.0	91.4	59.7
Summer	75.4	85.4	67.7	96.3	55.3
Sept.	72.4	82.8	63.6	95.1	53.4
Oct.	64.7	74.9	57.3	87.0	43.1
Nov.	48.8	58.8	41.0	78.0	29.2
Fall	61.9	72.1	53.9	95.1	29.2
Annual	59.7	69.8	50.8	96.3	2.9

*Temperature instrument 4 feet above ground.

Table 2.3.2-16

TEMPERATURE[a,d]

(Chattanooga, Tennessee)

Month		Avg. Temp.[b] °F	Avg. Max. Temp.[b] °F	Avg. Min. Temp.[b] °F	Extreme Max.[c] Temp. °F	Extreme Min.[c] Temp. °F
Dec.		41.2	50.9	31.4	78	-2
Jan.		40.2	49.9	30.5	78	-10
Feb.		42.9	53.4	32.3	79	1
	Winter	41.4	51.4	--	--	--
Mar.		49.8	61.2	38.4	87	8
Apr.		60.5	72.9	48.1	93	25
May.		68.5	81.0	56.0	99	34
	Spring	59.6	71.7	--	--	--
June		76.0	87.5	64.5	104	41
July		78.8	89.5	68.1	106	51
Aug.		78.0	89.0	67.0	105	50
	Summer	77.6	88.7	--	--	--
Sept.		71.9	83.4	60.4	102	36
Oct.		60.8	73.5	48.1	94	22
Nov.		48.9	60.7	37.1	84	4
	Fall	60.5	72.5	--	--	--
	Annual	59.8	71.1	48.5	106	-10

a. Local Climatological Data, "Annual Summary with Comparative Data," Chattanooga, Tennessee, U.S. Department of Commerce, NOAA, National Climatic Center, Asheville, N.C., 1979.
b. Based on record for 1941-1970.
c. Period of record 63 years, through 2002.
d. Local Climatological Data, “Annual Summary With Comparative Data, “Chattanooga, Tennessee, U.S. Department of Commerce, NOAA, National Climatic Data Center, Asheville, M.C., 2002.

SQN

Table 2.3.2-17

ABSOLUTE HUMIDITY*

Sequoyah Nuclear Plant

April 2, 1971-March 31, 1972

Month		Avg. A. H. g/m^3	Avg. Max. A. H. g/m^3	Avg. Min. A. H. g/m^3	Extreme Max. A. H. g/m^3	Extreme Min. A. H. g/m^3
Dec.		7.6	9.3	6.0	15.8	1.2
Jan.		5.4	7.1	3.8	15.4	1.1
Feb.		4.2	5.2	2.7	12.2	1.0
	Winter	5.7	7.2	4.2	15.8	1.0
Mar.		5.9	8.0	4.3	12.7	1.5
Apr.		6.3	7.8	5.0	12.2	2.7
May		9.6	11.7	7.8	17.3	3.3
	Spring	7.3	9.2	5.7	17.3	1.5
June		16.2	18.7	14.2	22.3	9.9
July		14.1	15.8	12.6	18.5	10.0
Aug.		13.9	15.9	12.2	19.6	8.7
	Summer	14.7	16.8	13.0	22.3	8.7
Sept.		14.6	17.2	12.0	21.8	8.0
Oct.		12.4	14.7	10.3	19.6	5.6
Nov.		6.4	8.4	5.2	18.2	2.1
	Fall	11.1	13.4	9.2	21.8	2.1
	Annual	9.7	11.7	8.0	22.3	1.0

*Computed from dry bulb and dew point temperature measurements 4 feet above ground.

SQN

Table 2.3.2-18

RELATIVE HUMIDITY*

Sequoyah Nuclear Plant

April 2, 1971-March 31, 1972

Month		Avg. R. H. (percent)	Avg. Max. R. H. (percent)	Avg. Min. R. H. (percent)	Extreme Max. R. H. (percent)	Extreme Min. R. H. (percent)
Dec.		78.4	89.6	62.6	100.0	34.8
Jan.		65.0	79.9	50.1	93.9	22.5
Feb.		59.8	74.2	43.5	95.3	22.1
	Winter	67.7	81.2	52.1	100.0	22.1
Mar.		63.8	83.4	43.4	100.0	21.9
Apr.		50.6	75.8	26.8	86.6	17.0
May		62.2	82.5	40.9	95.1	18.4
	Spring	58.9	80.5	37.0	100.0	17.0
June		74.4	90.1	51.3	100.0	34.5
July		64.3	73.7	51.6	78.8	37.2
Aug.		63.3	72.7	47.2	85.3	33.8
	Summer	67.3	78.8	50.0	100.0	33.8
Sept.		73.1	84.0	53.2	100.0	32.1
Oct.		78.4	89.0	61.7	99.3	37.8
Nov.		65.3	79.6	50.4	100.0	28.0
	Fall	72.2	84.2	55.1	100.0	28.0
	Annual	66.5	81.2	48.6	100.0	17.0

*Computed from dry bulb and dew point temperature measurements 4 feet above ground.

SQN

Table 2.3.2-19

PRECIPITATION*

(Friendship School, Tennessee)
1948-1967

Month	Days with 0.01 Inch or More	Monthly Average (inches)	Extreme Monthly Max. (inches)	Extreme Monthly Min. (inches)	Max. In 24 Hrs. (inches)
Dec.	10	5.40	12.15	0.82	3.02
Jan.	12	5.99	13.61	2.35	3.88
Feb.	11	5.82	11.41	2.43	3.08
Winter	33	17.21			
Mar.	12	6.76	15.22	2.60	6.08
Apr.	10	4.70	10.88	1.18	2.62
May	9	3.87	7.53	1.41	2.75
Spring	31	15.33			
June	9	4.16	7.20	0.59	2.60
July	11	5.34	11.31	0.74	2.98
Aug.	10	3.91	8.01	1.90	7.56
Summer	30	13.41			
Sept.	7	4.02	15.40	0.83	4.27
Oct.	7	2.86	9.63	0.09	2.24
Nov.	9	4.86	16.58	0.95	3.21
Fall	23	11.74			
Annual	117	57.69			

*TVA Raingage Station 685, Friendship School, Tennessee, located about 2-1/2 miles north-northeast of Sequoyah Landing site; period of record 20 years since station activation April 30, 1948.

Table 2.3.2-20

SNOWFALL[a,b]

(Chattanooga, Tennessee)

Month	Mean Total	Maximum Total	Maximum Total in 24 Hours
Jan.	1.8	10.2	10.2
Feb.	1.2	10.4	8.7
Mar.	0.7	20.0	20.0
Apr.	0.1	2.8	2.8
May	T	T	T
June	T	T	T
July	0	0	0
Aug.	0	0	0
Sept.	0	0	0
Oct.	T	T	T
Nov.	0.1	2.8	2.8
Dec.	0.6	9.1	8.9
Annual	4.4		

a. Local Climatological Data, "Annual Summary With Comparative Data," Chattanooga, Tennessee, U.S. Department of Commerce, NOAA, National Climatic Data Center, Asheville, N.C., 2002.

b. Period of record, 1931-1996.

Table 2.3.2-21

HEAVY FOG

(Chattanooga, Tennessee)

Month		Mean No. of Days With Heavy Fog[c]
Dec.		3
Jan.		3
Feb.		2
	Winter	8
Mar.		2
Apr.		2
May		2
	Spring	6
June		2
July		2
Aug.		3
	Summer	7
Sept.		4
Oct.		6
Nov.		4
	Fall	14
	Annual	36

a. Local Climatological Data, "Annual Summary With Comparative Data," Chattanooga, Tennessee, U.S. Department of Commerce, NOAA, National Climatic Center, Asheville, N.C., 1979.

b. Heavy fog is defined as fog reducing the visibility to 1/4 mile or less.

c. Period of record 49 years, through 1979. Rounding to whole days results in one-day difference between the sum of the monthly averages and the annual average.

Table 2.3.2-22

PERCENT OCCURRENCE OF ATMOSPHERIC STABILITY*

Sequoyah Nuclear Plant

January 1, 1972 - December 31, 1975

Pasquill Stability Class	Vertical Temperature Difference (Δ T)**	Percent Occurrence**
A	$\Delta T \leq -1.9^{\circ}C/100$ m	2.91
B	$-1.9 < \Delta T \leq -1.7^{\circ}C/100$ m	1.24
C	$-1.7 < \Delta T \leq -1.5^{\circ}C/100$ m	3.78
D	$-1.5 < \Delta T \leq -0.5^{\circ}C/100$ m	19.91
E	$-0.5 < \Delta T \leq 1.5^{\circ}C/100$ m	44.36
F	$1.5 < \Delta T \leq 4.0^{\circ}C/100$ m	20.79
G	$\Delta T > 4.0^{\circ}C/100$ m	6.93
Total		99.92

*Temperature instruments 9 and 46 meters above ground.

**Valid ΔT = 91.33 percent of total hours in period; percent occurrences are percentages of valid ΔT occurrences.

TABLE 2.3.2-23

JOINT PERCENTAGE FREQUENCIES OF WIND SPEED BY WIND DIRECTION FOR

STABILITY CLASS A (DELTA T<=-1.9 C/100 M)

SEQUOYAH NUCLEAR PLANT

JAN 1, 72 - DEC 31, 75

WIND DIRECTION	WIND SPEED(MPH) 0.6-1.4	1.5-3.4	3.5-5.4	5.5-7.4	7.5-12.4	12.5-18.4	18.5-24.4	>=24.5	TOTAL
N	0.01	0.01	0.03	0.04	0.04	0.0	0.0	0.0	0.13
NNE	0.0	0.04	0.19	0.20	0.16	0.01	0.0	0.0	0.60
NE	0.0	0.08	0.20	0.15	0.13	0.0	0.0	0.0	0.56
ENE	0.0	0.03	0.03	0.01	0.0	0.0	0.0	0.0	0.07
E	0.0	0.01	0.0	0.0	0.0	0.0	0.0	0.0	0.01
ESE	0.0	0.01	0.01	0.0	0.0	0.01	0.0	0.0	0.03
SE	0 0	0.01	0.02	0.0	0.0	0.0	0.0	0.0	0.03
SSE	0.0	0.01	0.03	0.02	0.02	0.01	0.0	0.0	0.09
S	0.0	0.01	0.04	0.06	0.05	0.01	0.0	0.0	0.17
SSW	0.0	0.01	0.09	0.18	0.16	0.01	0.0	0.0	0.45
SW	0.0	0.04	0.12	0.10	0.09	0.02	0.0	0.0	0.37
WSW	0.0	0.02	0.03	0.03	0.02	0.02	0.0	0.0	0.12
W	0.0	0.01	0.0	0.01	0.02	0.0	0.0	0.0	0.04
WNW	0.0	0.0	0.0	0.0	0.01	0.01	0.0	0.0	0.02
NW	0.0	0.01	0.01	0.01	0.05	0.01	0.0	0.0	0.09
NNW	0.0	0.01	0.0	0.02	0.08	0.01	0.0	0.0	0.12
SUBTOTAL	0.01	0.31	0.80	0.83	0.83	0.12	0.0	0.0	2.90

TOTAL HOURS OF VALID STABILITY OBSERVATIONS 32723
TOTAL HOURS OF STABILITY CLASS A 958
TOTAL HOURS OF VALID WIND DIRECTION-WIND SPEED-STABILITY CLASS A 934
TOTAL HOURS CALM 4 = 0.01 percent

ALL COLUMNS AND CALM TOTAL 100 PERCENT OF JOINT VALID OBSERVATIONS

METEOROLOGICAL FACILITY located 1.2 km southwest of Sequoyah Nuclear Plant
STABILITY BASED ON LAPSE RATE MEASURED BETWEEN 9.25 and 45.99 meters
WIND SPEED AND DIRECTION MEASURED AT THE 9.73 METER LEVEL
MEAN WIND SPEED = 6.5 MPH

TABLE 2.3.2-24

JOINT PERCENTAGE FREQUENCIES OF WIND SPEED BY WIND DIRECTION FOR

STABILITY CLASS B (-1.9< DELTA T<=-1.7 C/100 M)

SEQUOYAH NUCLEAR PLANT

JAN 1, 72 - DEC 31, 75

WIND DIRECTION	WIND SPEED(MPH) 0.6-1.4	1.5-3.4	3.5-5.4	5.5-7.4	7.5-12.4	12.5-18.4	18.5-24.4	>=24.5	TOTAL
N	0.0	0.01	0.0	0.01	0.03	0.0	0.0	0.0	0.05
NNE	0.0	0.02	0.10	0.10	0.08	0.0	0.0	0.0	0.30
NE	0.0	0.03	0.12	0.04	0.02	0.0	0.0	0.0	0.21
ENE	0.0	0.01	0.02	0.0	0.0	0.0	0.0	0.0	0.03
E	0.0	0.01	0.0	0.0	0.0	0.0	0.0	0.0	0.01
ESE	0.0	0.0	0.0	0.0	0.0	0.0	0.0	0.0	0.0
SE	0 0	0.01	0.01	0.0	0.0	0.0	0.0	0.0	0.02
SSE	0.0	0.01	0.01	0.0	0.01	0.0	0.0	0.0	0.03
S	0.0	0.03	0.01	0.03	0.03	0.0	0.0	0.0	0.10
SSW	0.0	0.01	0.03	0.07	0.09	0.0	0.0	0.0	0.20
SW	0.0	0.01	0.06	0.06	0.05	0.0	0.0	0.0	0.18
WSW	0.0	0.0	0.01	0.0	0.01	0.0	0.0	0.0	0.02
W	0.0	0.0	0.0	0.0	0.0	0.0	0.0	0.0	0.0
WNW	0.0	0.0	0.01	0.0	0.02	0.0	0.0	0.0	0.03
NW	0.0	0.0	0.0	0.0	0.03	0.0	0.0	0.0	0.03
NNW	0.0	0.0	0.0	0.01	0.02	0.0	0.0	0.0	0.03
SUBTOTAL	0.0	0.15	0.38	0.32	0.39	0.0	0.0	0.0	1.24

TOTAL HOURS OF VALID STABILITY OBSERVATIONS	32723
TOTAL HOURS OF STABILITY CLASS B	416
TOTAL HOURS OF VALID WIND DIRECTION-WIND SPEED-STABILITY CLASS B	411
TOTAL HOURS CALM	1 < 0.01 percent

ALL COLUMNS AND CALM TOTAL 100 PERCENT OF JOINT VALID OBSERVATIONS

METEOROLOGICAL FACILITY located 1.2 km southwest of Sequoyah Nuclear Plant
STABILITY BASED ON LAPSE RATE MEASURED BETWEEN 9.25 and 45.99 meters
WIND SPEED AND DIRECTION MEASURED AT THE 9.73 METER LEVEL
MEAN WIND SPEED = 6.4 MPH

TABLE 2.3.2-25

JOINT PERCENTAGE FREQUENCIES OF WIND SPEED BY WIND DIRECTION FOR

STABILITY CLASS C (-1.7< DELTA T<=-1.5 C/100 M)

SEQUOYAH NUCLEAR PLANT

JAN 1, 72 - DEC 31, 75

WIND DIRECTION	WIND SPEED(MPH) 0.6-1.4	1.5-3.4	3.5-5.4	5.5-7.4	7.5-12.4	12.5-18.4	18.5-24.4	>=24.5	TOTAL
N	0.0	0.01	0.03	0.03	0.02	0.0	0.0	0.0	0.09
NNE	0.0	0.08	0.25	0.21	0.22	0.0	0.0	0.0	0.76
NE	0.0	0.10	0.31	0.09	0.07	0.0	0.0	0.0	0.57
ENE	0.0	0.05	0.03	0.01	0.0	0.0	0.0	0.0	0.09
E	0.0	0.02	0.02	0.0	0.0	0.0	0.0	0.0	0.04
ESE	0.0	0.01	0.01	0.01	0.0	0.0	0.0	0.0	0.03
SE	0 0	0.01	0.01	0.0	0.0	0.0	0.0	0.0	0.02
SSE	0.0	0.02	0.04	0.0	0.03	0.0	0.0	0.0	0.09
S	0.0	0.04	0.07	0.09	0.07	0.02	0.0	0.0	0.29
SSW	0.0	0.04	0.16	0.27	0.24	0.04	0.0	0.0	0.75
SW	0.0	0.05	0.13	0.20	0.12	0.02	0.0	0.0	0.52
WSW	0.0	0.02	0.02	0.05	0.03	0.01	0.01	0.0	0.14
W	0.0	0.01	0.01	0.01	0.02	0.01	0.0	0.0	0.06
WNW	0.0	0.0	0.01	0.02	0.02	0.0	0.0	0.0	0.05
NW	0.01	0.0	0.0	0.02	0.05	0.01	0.0	0.0	0.09
NNW	0.0	0.01	0.04	0.03	0.09	0.01	0.0	0.0	0.18
SUBTOTAL	0.01	0.47	1.14	1.04	0.98	0.12	0.01	0.0	3.77

TOTAL HOURS OF VALID STABILITY OBSERVATIONS	32723
TOTAL HOURS OF STABILITY CLASS C	1237
TOTAL HOURS OF VALID WIND DIRECTION-WIND SPEED-STABILITY CLASS C	1214
TOTAL HOURS CALM	2 = 0.01 percent

ALL COLUMNS AND CALM TOTAL 100 PERCENT OF JOINT VALID OBSERVATIONS

METEOROLOGICAL FACILITY located 1.2 km southwest of Sequoyah Nuclear Plant
STABILITY BASED ON LAPSE RATE MEASURED BETWEEN 9.25 and 45.99 meters
WIND SPEED AND DIRECTION MEASURED AT THE 9.73 METER LEVEL
MEAN WIND SPEED = 6.3 MPH

TABLE 2.3.2-26

JOINT PERCENTAGE FREQUENCIES OF WIND SPEED BY WIND DIRECTION FOR

STABILITY CLASS D (-1.5< DELTA T<=-0.5 C/100 M)

SEQUOYAH NUCLEAR PLANT

JAN 1, 72 - DEC 31, 75

WIND DIRECTION	WIND SPEED(MPH) 0.6-1.4	1.5-3.4	3.5-5.4	5.5-7.4	7.5-12.4	12.5-18.4	18.5-24.4	>=24.5	TOTAL
N	0.01	0.24	0.22	0.16	0.17	0.0	0.0	0.0	0.80
NNE	0.06	0.73	1.03	0.84	0.78	0.07	0.0	0.0	3.51
NE	0.02	0.76	0.88	0.42	0.42	0.05	0.0	0.0	2.55
ENE	0.01	0.21	0.11	0.03	0.0	0.0	0.0	0.0	0.36
E	0.01	0.12	0.03	0.02	0.01	0.0	0.0	0.0	0.19
ESE	0.01	0.06	0.02	0.0	0.0	0.0	0.0	0.0	0.09
SE	0.0	0.12	0.08	0.0	0.0	0.0	0.0	0.0	0.20
SSE	0.0	0.15	0.15	0.05	0.06	0.01	0.01	0.0	0.43
S	0.01	0.31	0.53	0.38	0.25	0.02	0.0	0.0	1.50
SSW	0.01	0.44	1.25	0.95	0.70	0.07	0.0	0.0	3.42
SW	0.01	0.47	1.17	1.03	0.52	0.03	0.01	0.0	3.24
WSW	0.0	0.22	0.34	0.18	0.21	0.07	0.01	0.0	1.03
W	0.01	0.06	0.08	0.10	0.19	0.02	0.01	0.0	0.47
WNW	0.01	0.06	0.05	0.11	0.18	0.01	0.0	0.0	0.42
NW	0.0	0.08	0.08	0.22	0.31	0.03	0.0	0.0	0.72
NNW	0.01	0.15	0.14	0.25	0.36	0.02	0.0	0.0	0.93
SUBTOTAL	0.18	4.18	6.16	4.74	4.16	0.40	0.04	0.0	19.86

TOTAL HOURS OF VALID STABILITY OBSERVATIONS	32723
TOTAL HOURS OF STABILITY CLASS D	6567
TOTAL HOURS OF VALID WIND DIRECTION-WIND SPEED-STABILITY CLASS D	6345
TOTAL HOURS CALM	16 = 0.05 percent

ALL COLUMNS AND CALM TOTAL 100 PERCENT OF JOINT VALID OBSERVATIONS

METEOROLOGICAL FACILITY located 1.2 km southwest of Sequoyah Nuclear Plant
STABILITY BASED ON LAPSE RATE MEASURED BETWEEN 9.25 and 45.99 meters
WIND SPEED AND DIRECTION MEASURED AT THE 9.73 METER LEVEL
MEAN WIND SPEED = 5.8 MPH

TABLE 2.3.2-27

JOINT PERCENTAGE FREQUENCIES OF WIND SPEED BY WIND DIRECTION FOR

STABILITY CLASS E (-0.5< DELTA T<=1.5 C/100 M)

SEQUOYAH NUCLEAR PLANT

JAN 1, 72 - DEC 31, 75

WIND DIRECTION	WIND SPEED(MPH) 0.6-1.4	1.5-3.4	3.5-5.4	5.5-7.4	7.5-12.4	12.5-18.4	18.5-24.4	>=24.5	TOTAL
N	0.23	1.26	0.83	0.39	0.27	0.0	0.0	0.0	2.98
NNE	0.31	2.83	2.46	1.07	0.92	0.03	0.0	0.0	7.62
NE	0.15	1.03	0.71	0.31	0.18	0.01	0.0	0.0	2.39
ENE	0.12	0.48	0.16	0.04	0.0	0.0	0.0	0.0	0.80
E	0.14	0.24	0.05	0.01	0.01	0.0	0.0	0.0	0.45
ESE	0.09	0.11	0.01	0.01	0.01	0.01	0.0	0.0	0.24
SE	0.10	0.37	0.06	0.01	0.01	0.0	0.0	0.0	0.55
SSE	0.11	0.58	0.24	0.13	0.23	0.04	0.02	0.0	1.35
S	0.17	1.33	1.49	0.91	1.05	0.08	0.0	0.0	5.03
SSW	0.10	1.67	2.32	1.67	1.45	0.11	0.0	0.0	7.32
SW	0.17	1.59	2.07	1.30	0.99	0.10	0.0	0.0	6.22
WSW	0.13	0.87	0.55	0.35	0.40	0.06	0.0	0.0	2.36
W	0.10	0.42	0.28	0.21	0.22	0.03	0.0	0.0	1.26
WNW	0.14	0.37	0.22	0.19	0.27	0.02	0.0	0.0	1.21
NW	0.10	0.50	0.37	0.43	0.38	0.02	0.0	0.0	1.80
NNW	0.15	0.80	0.68	0.57	0.40	0.01	0.0	0.0	2.61
SUBTOTAL	2.31	14.45	12.50	7.60	6.79	0.52	0.02	0.0	44.19

TOTAL HOURS OF VALID STABILITY OBSERVATIONS	32723
TOTAL HOURS OF STABILITY CLASS E	14624
TOTAL HOURS OF VALID WIND DIRECTION-WIND SPEED-STABILITY CLASS E	14146
TOTAL HOURS CALM	54 = 0.17 percent

ALL COLUMNS AND CALM TOTAL 100 PERCENT OF JOINT VALID OBSERVATIONS

METEOROLOGICAL FACILITY located 1.2 km southwest of Sequoyah Nuclear Plant
STABILITY BASED ON LAPSE RATE MEASURED BETWEEN 9.25 and 45.99 meters
WIND SPEED AND DIRECTION MEASURED AT THE 9.73 METER LEVEL
MEAN WIND SPEED = 4.8 MPH

TABLE 2.3.2-28

JOINT PERCENTAGE FREQUENCIES OF WIND SPEED BY WIND DIRECTION FOR

STABILITY CLASS F (1.5< DELTA T<=4.0 C/100 M)

SEQUOYAH NUCLEAR PLANT

JAN 1, 72 - DEC 31, 75

WIND DIRECTION	WIND SPEED(MPH) 0.6-1.4	1.5-3.4	3.5-5.4	5.5-7.4	7.5-12.4	12.5-18.4	18.5-24.4	>=24.5	TOTAL
N	0.22	1.42	0.45	0.04	0.0	0.0	0.0	0.0	2.13
NNE	0.35	3.69	0.86	0.05	0.0	0.0	0.0	0.0	4.95
NE	0.22	1.19	0.29	0.01	0.0	0.0	0.0	0.0	1.71
ENE	0.16	0.41	0.03	0.0	0.0	0.0	0.0	0.0	0.60
E	0.22	0.23	0.0	0.0	0.0	0.0	0.0	0.0	0.45
ESE	0.13	0.19	0.02	0.0	0.0	0.0	0.0	0.0	0.34
SE	0.15	0.24	0.02	0.0	0.0	0.0	0.0	0.0	0.41
SSE	0.16	0.38	0.07	0.03	0.01	0.0	0.0	0.0	0.65
S	0.18	0.80	0.30	0.10	0.06	0.0	0.0	0.0	1.44
SSW	0.13	1.15	0.73	0.26	0.12	0.0	0.0	0.0	2.39
SW	0.10	1.03	0.87	0.29	0.13	0.0	0.0	0.0	2.42
WSW	0.09	0.47	0.20	0.04	0.01	0.0	0.0	0.0	0.81
W	0.07	0.20	0.07	0.01	0.0	0.0	0.0	0.0	0.35
WNW	0.10	0.24	0.07	0.01	0.0	0.0	0.0	0.0	0.42
NW	0.05	0.30	0.15	0.06	0.01	0.0	0.0	0.0	0.57
NNW	0.09	0.53	0.35	0.05	0.01	0.0	0.0	0.0	1.03
SUBTOTAL	2.42	12.47	4.48	0.95	0.35	0.0	0.0	0.0	20.67

TOTAL HOURS OF VALID STABILITY OBSERVATIONS	32723
TOTAL HOURS OF STABILITY CLASS F	6718
TOTAL HOURS OF VALID WIND DIRECTION-WIND SPEED-STABILITY CLASS F	6637
TOTAL HOURS CALM	39 = 0.12 percent

ALL COLUMNS AND CALM TOTAL 100 PERCENT OF JOINT VALID OBSERVATIONS

METEOROLOGICAL FACILITY located 1.2 km southwest of Sequoyah Nuclear Plant
STABILITY BASED ON LAPSE RATE MEASURED BETWEEN 9.25 and 45.99 meters
WIND SPEED AND DIRECTION MEASURED AT THE 9.73 METER LEVEL
MEAN WIND SPEED = 3.0 MPH

TABLE 2.3.2-29

JOINT PERCENTAGE FREQUENCIES OF WIND SPEED BY WIND DIRECTION FOR

STABILITY CLASS G (DELTA T > 4.0 C/100 M)

SEQUOYAH NUCLEAR PLANT

JAN 1, 72 - DEC 31, 75

WIND DIRECTION	WIND SPEED(MPH) 0.6-1.4	1.5-3.4	3.5-5.4	5.5-7.4	7.5-12.4	12.5-18.4	18.5-24.4	>=24.5	TOTAL
N	0.05	0.28	0.08	0.0	0.0	0.0	0.0	0.0	0.41
NNE	0.10	0.95	0.19	0.0	0.0	0.0	0.0	0.0	1.24
NE	0.08	0.70	0.11	0.0	0.0	0.0	0.0	0.0	0.89
ENE	0.13	0.40	0.02	0.0	0.0	0.0	0.0	0.0	0.55
E	0.12	0.17	0.01	0.0	0.0	0.0	0.0	0.0	0.30
ESE	0.10	0.07	0.0	0.0	0.0	0.0	0.0	0.0	0.17
SE	0.09	0.07	0.0	0.0	0.0	0.0	0.0	0.0	0.16
SSE	0.15	0.20	0.0	0.0	0.0	0.0	0.0	0.0	0.35
S	0.09	0.37	0.04	0.01	0.0	0.0	0.0	0.0	0.51
SSW	0.06	0.45	0.30	0.02	0.01	0.0	0.0	0.0	0.84
SW	0.03	0.40	0.40	0.04	0.0	0.0	0.0	0.0	0.87
WSW	0.01	0.10	0.06	0.0	0.0	0.0	0.0	0.0	0.17
W	0.03	0.08	0.02	0.0	0.0	0.0	0.0	0.0	0.13
WNW	0.01	0.03	0.01	0.0	0.01	0.0	0.0	0.0	0.06
NW	0.01	0.05	0.03	0.0	0.0	0.0	0.0	0.0	0.09
NNW	0.02	0.08	0.03	0.0	0.0	0.0	0.0	0.0	0.13
SUBTOTAL	1.08	4.40	1.30	0.07	0.02	0.0	0.0	0.0	6.87

TOTAL HOURS OF VALID STABILITY OBSERVATIONS 32723
TOTAL HOURS OF STABILITY CLASS G 2203
TOTAL HOURS OF VALID WIND DIRECTION-WIND SPEED-STABILITY CLASS G 2202
TOTAL HOURS CALM 18 = 0.06 percent

ALL COLUMNS AND CALM TOTAL 100 PERCENT OF JOINT VALID OBSERVATIONS

METEOROLOGICAL FACILITY located 1.2 km southwest of Sequoyah Nuclear Plant
STABILITY BASED ON LAPSE RATE MEASURED BETWEEN 9.25 and 45.99 meters
WIND SPEED AND DIRECTION MEASURED AT THE 9.73 METER LEVEL
MEAN WIND SPEED = 2.5 MPH

Table 2.3.2-30

Sequoyah Nuclear Plant -

Percent of Observations in Each Stability Class -

Hourly-Average and End-of-Hour Temperature Differences (ΔT)

(May 1975-April 1976)

	150' - 33' ΔT Vs. 33' Wind Data		300' - 33' ΔT Vs. 300' Wind Data	
Stability Class	Hourly-Average	End-of-Hour	Hourly-Average	End-of-Hour
A	1.73	3.23	0.14	0.62
B	3.20	2.96	0.89	1.12
C	2.25	2.26	2.37	2.61
D	19.24	18.00	33.55	32.63
E	41.97	42.48	41.17	41.21
F	21.56	20.22	15.06	14.80
G	9.96	10.89	6.71	6.92
Joint Recovery Rate (Wind Direction, Wind Speed, and ΔT)	97.4%	97.4%	97.1%	97.1%
Number of Hours of Inversion ΔT	4979	4898	3808	3705
Total Hours of Valid ΔT	8620	8621	8589	8590
Percent Frequency of Hours of Inversion ΔT (Inversion/Total x 100)	57.8%	56.8%	44.3%	43.1%

TABLE 2.3.2-31

JOINT PERCENTAGE FREQUENCIES OF WIND DIRECTION AND WIND SPEED
FOR DIFFERENT STABILITY CLASSES*

STABILITY CLASS A
DELTA T<=-1.9 DEG. C/100M
SEQUOYAH NUCLEAR PLANT METEOROLOGICAL FACILITY
MAY 1, 1975 - APRIL 30, 1976

WIND DIRECTION	WIND SPEED (MPH) 0.6-1.4	1.5-3.4	3.5-5.4	5.5-7.4	7.5-12.4	12.5-18.4	18.5-24.4	>=24.5	TOTAL
N	0.0	0.0	0.01	0.08	0.06	0.0	0.0	0.0	0.15
NNE	0.0	0.02	0.14	0.27	0.23	0.0	0.0	0.0	0.66
NE	0.0	0.01	0.20	0.21	0.09	0.0	0.0	0.0	0.51
ENE	0.0	0.0	0.06	0.0	0.0	0.0	0.0	0.0	0.06
E	0.0	0.0	0.01	0.0	0.0	0.0	0.0	0.0	0.01
ESE	0.0	0.0	0.0	0.0	0.0	0.0	0.0	0.0	0.0
SE	0.0	0.01	0.01	0.0	0.0	0.0	0.0	0.0	0.02
SSE	0.0	0.01	0.02	0.01	0.02	0.0	0.0	0.0	0.06
S	0.0	0.0	0.0	0.0	0.04	0.0	0.0	0.0	0.04
SSW	0.0	0.0	0.0	0.01	0.05	0.02	0.0	0.0	0.08
SW	0.0	0.0	0.01	0.01	0.01	0.04	0.0	0.0	0.07
WSW	0.0	0.0	0.01	0.01	0.0	0.0	0.0	0.0	0.02
W	0.0	0.0	0.0	0.01	0.0	0.0	0.0	0.0	0.01
WNW	0.0	0.0	0.0	0.0	0.0	0.0	0.0	0.0	0.0
NW	0.0	0.0	0.0	0.0	0.01	0.0	0.0	0.0	0.01
NNW	0.0	0.0	0.0	0.01	0.02	0.0	0.0	0.0	0.03
SUBTOTAL	0.0	0.05	0.47	0.62	0.53	0.06	0.0	0.0	1.73

CALM = 0.0

154 STABILITY CLASS A OCCURRENCES OUT OF TOTAL 8620 VALID TEMPERATURE DIFFERENCE READINGS
151 VALID WIND DIRECTION - WIND SPEED READINGS OUT OF TOTAL 154 STABILITY CLASS A OCCURRENCES
ALL COLUMNS AND CALM TOTAL 100 PERCENT OF NET VALID READINGS

*METEOROLOGICAL FACILITY LOCATED .74 MILES SW OF SEQUOYAH NUCLEAR PLANT
TEMPERATURE INSTRUMENTS 33 AND 150 FEET ABOVE GROUND
WIND INSTRUMENTS 33 FEET ABOVE GROUND
"HOURLY AVERAGE TEMPERATURE"

TABLE 2.3.2-32

JOINT PERCENTAGE FREQUENCIES OF WIND DIRECTION AND WIND SPEED
FOR DIFFERENT STABILITY CLASSES*

STABILITY CLASS A
DELTA T<=-1.9 DEG. C/100M
SEQUOYAH NUCLEAR PLANT METEOROLOGICAL FACILITY
MAY 1, 75 - APRIL 30, 76

WIND	WIND SPEED (MPH)								
DIRECTION	0.6-1.4	1.5-3.4	3.5-5.4	5.5-7.4	7.5-12.4	12.5-18.4	18.5-24.4	>=24.5	TOTAL
N	0.0	0.02	0.02	0.09	0.05	0.0	0.0	0.0	0.18
NNE	0.0	0.07	0.26	0.19	0.28	0.01	0.0	0.0	0.81
NE	0.0	0.09	0.27	0.20	0.13	0.0	0.0	0.0	0.69
ENE	0.0	0.06	0.09	0.0	0.0	0.0	0.0	0.0	0.15
E	0.0	0.05	0.05	0.0	0.0	0.0	0.0	0.0	0.10
ESE	0.0	0.01	0.01	0.0	0.0	0.0	0.0	0.0	0.02
SE	0.0	0.02	0.04	0.0	0.0	0.0	0.0	0.0	0.06
SSE	0.0	0.02	0.04	0.0	0.02	0.0	0.0	0.0	0.08
S	0.0	0.04	0.02	0.09	0.04	0.0	0.0	0.0	0.19
SSW	0.0	0.0	0.06	0.08	0.15	0.04	0.0	0.0	0.33
SW	0.0	0.02	0.11	0.13	0.05	0.02	0.0	0.0	0.33
WSW	0.0	0.0	0.0	0.02	0.0	0.0	0.0	0.0	0.02
W	0.0	0.0	0.01	0.0	0.0	0.0	0.0	0.0	0.01
WNW	0.01	0.0	0.0	0.0	0.05	0.0	0.0	0.0	0.06
NW	0.0	0.0	0.0	0.01	0.12	0.0	0.0	0.0	0.13
NNW	0.0	0.0	0.02	0.01	0.04	0.0	0.0	0.0	0.07
SUBTOTAL	0.01	0.40	1.00	0.82	0.93	0.07	0.0	0.0	3.23

CALM = 0.0

279 STABILITY CLASS A OCCURRENCES OUT OF TOTAL 8621 VALID TEMPERATURE DIFFERENCE READINGS

276 VALID WIND DIRECTION - WIND SPEED READINGS OUT OF TOTAL 279 STABILITY CLASS A OCCURRENCES

ALL COLUMNS AND CALM TOTAL 100 PERCENT OF NET VALID READINGS

*METEOROLOGICAL FACILITY LOCATED .74 MILES SW OF SEQUOYAH NUCLEAR PLANT
TEMPERATURE INSTRUMENTS 33 AND 150 FEET ABOVE GROUND
WIND INSTRUMENTS 33 FEET ABOVE GROUND
"END OF HOUR TEMPERATURE READINGS"

TABLE 2.3.2-33

JOINT PERCENTAGE FREQUENCIES OF WIND DIRECTION AND WIND SPEED
FOR DIFFERENT STABILITY CLASSES*

STABILITY CLASS B
-1.9< DELTA T< =-1.7 DEG. C/100M
SEQUOYAH NUCLEAR PLANT METEOROLOGICAL FACILITY
MAY 1, 75 - APRIL 30, 76

WIND DIRECTION	WIND SPEED (MPH) 0.6-1.4	1.5-3.4	3.5-5.4	5.5-7.4	7.5-12.4	12.5-18.4	18.5-24.4	>=24.5	TOTAL
N	0.0	0.0	0.02	0.04	0.07	0.01	0.0	0.0	0.14
NNE	0.0	0.08	0.29	0.15	0.20	0.0	0.0	0.0	0.72
NE	0.0	0.09	0.32	0.08	0.09	0.01	0.0	0.0	0.59
ENE	0.0	0.04	0.04	0.0	0.0	0.0	0.0	0.0	0.08
E	0.0	0.02	0.01	0.0	0.0	0.0	0.0	0.0	0.03
ESE	0.0	0.02	0.02	0.0	0.0	0.0	0.0	0.0	0.04
SE	0.0	0.02	0.04	0.0	0.0	0.0	0.0	0.0	0.06
SSE	0.0	0.02	0.01	0.01	0.01	0.0	0.0	0.0	0.05
S	0.0	0.0	0.02	0.08	0.04	0.0	0.0	0.0	0.14
SSW	0.0	0.02	0.13	0.09	0.28	0.07	0.0	0.0	0.59
SW	0.0	0.04	0.05	0.08	0.05	0.01	0.0	0.0	0.23
WSW	0.0	0.0	0.0	0.02	0.01	0.0	0.0	0.0	0.03
W	0.0	0.0	0.0	0.01	0.05	0.0	0.0	0.0	0.08
WNW	0.0	0.0	0.01	0.01	0.04	0.0	0.0	0.0	0.06
NW	0.0	0.0	0.0	0.02	0.12	0.0	0.0	0.0	0.14
NNW	0.0	0.02	0.02	0.05	0.15	0.0	0.0	0.0	0.24
SUBTOTAL	0.0	0.37	0.98	0.64	1.11	0.10	0.0	0.0	3.20

CALM = 0.0

277 STABILITY CLASS B OCCURRENCES OUT OF TOTAL 8620 VALID TEMPERATURE DIFFERENCE READINGS

276 VALID WIND DIRECTION - WIND SPEED READINGS OUT OF TOTAL 277 STABILITY CLASS B OCCURRENCES

ALL COLUMNS AND CALM TOTAL 100 PERCENT OF NET VALID READINGS

*METEOROLOGICAL FACILITY LOCATED .74 MILES SW OF SEQUOYAH NUCLEAR PLANT
TEMPERATURE INSTRUMENTS 33 AND 150 FEET ABOVE GROUND
WIND INSTRUMENTS 33 FEET ABOVE GROUND
"HOURLY AVERAGE TEMPERATURE"

TABLE 2.3.2-34

JOINT PERCENTAGE FREQUENCIES OF WIND DIRECTION AND WIND SPEED
FOR DIFFERENT STABILITY CLASSES*

STABILITY CLASS B
-1.9< DELTA T<=-1.7 DEG. C/100M
SEQUOYAH NUCLEAR PLANT METEOROLOGICAL FACILITY
MAY 1, 75 - APRIL 30, 76

WIND	WIND SPEED (MPH)								
DIRECTION	0.6-1.4	1.5-3.4	3.5-5.4	5.5-7.4	7.5-12.4	12.5-18.4	18.5-24.4	>=24.5	TOTAL
N	0.0	0.0	0.02	0.0	0.06	0.0	0.0	0.0	0.08
NNE	0.0	0.08	0.13	0.16	0.12	0.0	0.0	0.0	0.49
NE	0.0	0.15	0.28	0.07	0.08	0.0	0.0	0.0	0.58
ENE	0.0	0.01	0.02	0.0	0.0	0.0	0.0	0.0	0.03
E	0.0	0.02	0.0	0.0	0.0	0.0	0.0	0.0	0.02
ESE	0.0	0.0	0.01	0.0	0.0	0.0	0.0	0.0	0.01
SE	0.0	0.02	0.02	0.0	0.0	0.0	0.0	0.0	0.04
SSE	0.0	0.01	0.06	0.0	0.01	0.0	0.0	0.0	0.08
S	0.0	0.0	0.08	0.09	0.01	0.0	0.0	0.0	0.18
SSW	0.0	0.02	0.15	0.15	0.29	0.01	0.0	0.0	0.62
SW	0.0	0.01	0.11	0.18	0.13	0.01	0.0	0.0	0.44
WSW	0.0	0.0	0.02	0.04	0.0	0.01	0.0	0.0	0.07
W	0.0	0.0	0.0	0.02	0.01	0.0	0.0	0.0	0.03
WNW	0.0	0.0	0.0	0.01	0.04	0.0	0.0	0.0	0.05
NW	0.0	0.0	0.0	0.01	0.14	0.0	0.0	0.0	0.05
NNW	0.0	0.0	0.0	0.06	0.13	0.0	0.0	0.0	0.19
SUBTOTAL	0.0	0.32	0.90	0.79	0.92	0.03	0.0	0.0	2.96

CALM = 0.0

258 STABILITY CLASS B OCCURRENCES OUT OF TOTAL 8621 VALID TEMPERATURE DIFFERENCE READINGS

256 VALID WIND DIRECTION - WIND SPEED READINGS OUT OF TOTAL 258 STABILITY CLASS B OCCURRENCES

ALL COLUMNS AND CALM TOTAL 100 PERCENT OF NET VALID READINGS

*METEOROLOGICAL FACILITY LOCATED .74 MILES SW OF SEQUOYAH NUCLEAR PLANT
TEMPERATURE INSTRUMENTS 33 AND 150 FEET ABOVE GROUND
WIND INSTRUMENTS 33 FEET ABOVE GROUND
"END OF HOUR TEMPERATURE READINGS"

TABLE 2.3.2-35

JOINT PERCENTAGE FREQUENCIES OF WIND DIRECTION AND WIND SPEED
FOR DIFFERENT STABILITY CLASSES*

STABILITY CLASS C
-1.7<DELTA T<=-1.5 DEG. C/100M
SEQUOYAH NUCLEAR PLANT METEOROLOGICAL FACILITY
MAY 1, 75 - APRIL 30, 76

WIND	WIND SPEED (MPH)								
DIRECTION	0.6-1.4	1.5-3.4	3.5-5.4	5.5-7.4	7.5-12.4	12.5-18.4	18.5-24.4	>=24.5	TOTAL
N	0.0	0.01	0.02	0.02	0.02	0.0	0.0	0.0	0.07
NNE	0.0	0.02	0.07	0.09	0.05	0.01	0.0	0.0	0.24
NE	0.0	0.09	0.12	0.05	0.04	0.0	0.0	0.0	0.30
ENE	0.0	0.05	0.05	0.0	0.0	0.0	0.0	0.0	0.10
E	0.0	0.04	0.02	0.0	0.0	0.0	0.0	0.0	0.06
ESE	0.0	0.0	0.01	0.0	0.0	0.0	0.0	0.0	0.01
SE	0.0	0.0	0.01	0.0	0.0	0.0	0.0	0.0	0.01
SSE	0.0	0.02	0.07	0.01	0.0	0.0	0.0	0.0	0.10
S	0.0	0.02	0.02	0.05	0.04	0.01	0.0	0.0	0.14
SSW	0.0	0.0	0.12	0.16	0.20	0.01	0.0	0.0	0.49
SW	0.0	0.0	0.09	0.15	0.16	0.0	0.0	0.0	0.40
WSW	0.0	0.0	0.0	0.01	0.02	0.01	0.0	0.0	0.04
W	0.0	0.0	0.02	0.01	0.01	0.0	0.0	0.0	0.04
WNW	0.0	0.0	0.04	0.01	0.04	0.0	0.0	0.0	0.09
NW	0.0	0.0	0.0	0.0	0.08	0.0	0.0	0.0	0.08
NNW	0.0	0.0	0.0	0.01	0.07	0.0	0.0	0.0	0.08
SUBTOTAL	0.0	0.25	0.66	0.57	0.73	0.04	0.0	0.0	2.25

CALM = 0.0

196 STABILITY CLASS C OCCURRENCES OUT OF TOTAL 8620 VALID TEMPERATURE DIFFERENCE READINGS

195 VALID WIND DIRECTION - WIND SPEED READINGS OUT OF TOTAL 196 STABILITY CLASS C OCCURRENCES

ALL COLUMNS AND CALM TOTAL 100 PERCENT OF NET VALID READINGS

*METEOROLOGICAL FACILITY LOCATED .74 MILES SW OF SEQUOYAH NUCLEAR PLANT
TEMPERATURE INSTRUMENTS 33 AND 150 FEET ABOVE GROUND
WIND INSTRUMENTS 33 FEET ABOVE GROUND
"HOURLY AVERAGE TEMPERATURE"

TABLE 2.3.2-36

JOINT PERCENTAGE FREQUENCIES OF WIND DIRECTION AND WIND SPEED
FOR DIFFERENT STABILITY CLASSES*

STABILITY CLASS C
-1.7< DELTA T<=-1.5 DEG. C/100M
SEQUOYAH NUCLEAR PLANT METEOROLOGICAL FACILITY
MAY 1, 75 - APRIL 30, 76

WIND	WIND SPEED (MPH)								
DIRECTION	0.6-1.4	1.5-3.4	3.5-5.4	5.5-7.4	7.5-12.4	12.5-18.4	18.5-24.4	>=24.5	TOTAL
N	0.0	0.01	0.04	0.01	0.02	0.0	0.0	0.0	0.08
NNE	0.0	0.05	0.14	0.22	0.08	0.01	0.0	0.0	0.50
NE	0.0	0.09	0.15	0.09	0.05	0.01	0.0	0.0	0.39
ENE	0.0	0.02	0.0	0.0	0.0	0.0	0.0	0.0	0.02
E	0.0	0.01	0.01	0.0	0.0	0.0	0.0	0.0	0.02
ESE	0.0	0.01	0.0	0.0	0.0	0.0	0.0	0.0	0.01
SE	0.0	0.0	0.0	0.0	0.0	0.0	0.0	0.0	0.0
SSE	0.0	0.02	0.01	0.01	0.0	0.0	0.0	0.0	0.04
S	0.0	0.01	0.06	0.06	0.02	0.0	0.0	0.0	0.15
SSW	0.0	0.02	0.12	0.19	0.09	0.01	0.0	0.0	0.43
SW	0.0	0.04	0.08	0.11	0.06	0.0	0.0	0.0	0.29
WSW	0.0	0.04	0.05	0.01	0.04	0.0	0.0	0.0	0.14
W	0.0	0.0	0.0	0.0	0.0	0.0	0.0	0.0	0.0
WNW	0.0	0.0	0.0	0.01	0.02	0.0	0.0	0.0	0.03
NW	0.0	0.0	0.01	0.01	0.07	0.0	0.0	0.0	0.09
NNW	0.0	0.01	0.01	0.0	0.05	0.0	0.0	0.0	0.07
SUBTOTAL	0.0	0.33	0.68	0.72	0.50	0.03	0.0	0.0	2.26

CALM = 0.0

196 STABILITY CLASS C OCCURRENCES OUT OF TOTAL 8621 VALID TEMPERATURE DIFFERENCE READINGS

195 VALID WIND DIRECTION - WIND SPEED READINGS OUT OF TOTAL 196 STABILITY CLASS C OCCURRENCES

ALL COLUMNS AND CALM TOTAL 100 PERCENT OF NET VALID READINGS

*METEOROLOGICAL FACILITY LOCATED .74 MILES SW OF SEQUOYAH NUCLEAR PLANT
TEMPERATURE INSTRUMENTS 33 AND 150 FEET ABOVE GROUND
WIND INSTRUMENTS 33 FEET ABOVE GROUND
"END OF HOUR TEMPERATURE READINGS"

TABLE 2.3.2-37

JOINT PERCENTAGE FREQUENCIES OF WIND DIRECTION AND WIND SPEED
FOR DIFFERENT STABILITY CLASSES*

STABILITY CLASS D
-1.5< DELTA T<=-0.5 DEG. C/100M
SEQUOYAH NUCLEAR PLANT METEOROLOGICAL FACILITY
MAY 1, 75 - APRIL 30, 76

WIND DIRECTION	WIND SPEED (MPH) 0.6-1.4	1.5-3.4	3.5-5.4	5.5-7.4	7.5-12.4	12.5-18.4	18.5-24.4	>=24.5	TOTAL
N	0.0	0.18	0.29	0.21	0.27	0.0	0.0	0.0	0.95
NNE	0.0	0.51	0.81	0.64	0.40	0.05	0.0	0.0	2.41
NE	0.0	0.88	0.68	0.26	0.19	0.0	0.0	0.0	2.01
ENE	0.0	0.23	0.08	0.0	0.0	0.0	0.0	0.0	0.31
E	0.0	0.15	0.04	0.0	0.0	0.0	0.0	0.0	0.19
ESE	0.0	0.08	0.02	0.0	0.0	0.0	0.0	0.0	0.10
SE	0.0	0.13	0.07	0.0	0.0	0.0	0.0	0.0	0.20
SSE	0.0	0.22	0.25	0.09	0.05	0.0	0.0	0.0	0.61
S	0.0	0.28	0.85	0.64	0.16	0.02	0.0	0.0	1.95
SSW	0.0	0.42	1.31	1.09	0.86	0.01	0.0	0.0	3.69
SW	0.01	0.48	1.52	1.59	0.39	0.0	0.0	0.0	3.99
WSW	0.0	0.18	0.30	0.19	0.22	0.01	0.0	0.0	0.90
W	0.0	0.06	0.14	0.05	0.05	0.0	0.0	0.0	0.30
WNW	0.0	0.04	0.01	0.09	0.18	0.0	0.0	0.0	0.32
NW	0.0	0.06	0.09	0.12	0.15	0.0	0.0	0.0	0.42
NNW	0.0	0.05	0.12	0.21	0.50	0.01	0.0	0.0	0.89
SUBTOTAL	0.01	3.95	6.58	5.18	3.42	0.10	0.0	0.0	19.24

CALM = 0.0

1656 STABILITY CLASS D OCCURRENCES OUT OF TOTAL 8620 VALID TEMPERATURE DIFFERENCE READINGS

1645 VALID WIND DIRECTION - WIND SPEED READINGS OUT OF TOTAL 1656 STABILITY CLASS D OCCURRENCES

ALL COLUMNS AND CALM TOTAL 100 PERCENT OF NET VALID READINGS

*METEOROLOGICAL FACILITY LOCATED .74 MILES SW OF SEQUOYAH NUCLEAR PLANT
TEMPERATURE INSTRUMENTS 33 AND 150 FEET ABOVE GROUND
WIND INSTRUMENTS 33 FEET ABOVE GROUND
"HOURLY AVERAGE TEMPERATURE"

TABLE 2.3.2-38

JOINT PERCENTAGE FREQUENCIES OF WIND DIRECTION AND WIND SPEED
FOR DIFFERENT STABILITY CLASSES*

STABILITY CLASS D
-1.5< DELTA T< =-0.5 DEG. C/100M
SEQUOYAH NUCLEAR PLANT METEOROLOGICAL FACILITY
MAY 1, 75 - APRIL 30, 76

WIND DIRECTION	WIND SPEED (MPH) 0.6-1.4	1.5-3.4	3.5-5.4	5.5-7.4	7.5-12.4	12.5-18.4	18.5-24.4	>=24.5	TOTAL
N	0.0	0.19	0.26	0.23	0.32	0.01	0.0	0.0	1.01
NNE	0.02	0.74	0.98	0.55	0.40	0.05	0.0	0.0	2.74
NE	0.0	0.67	0.55	0.22	0.15	0.0	0.0	0.0	1.59
ENE	0.01	0.27	0.11	0.0	0.0	0.0	0.0	0.0	0.39
E	0.0	0.13	0.06	0.0	0.0	0.0	0.0	0.0	0.19
ESE	0.0	0.06	0.02	0.0	0.0	0.0	0.0	0.0	0.06
SE	0.0	0.13	0.07	0.0	0.0	0.0	0.0	0.0	0.20
SSE	0.01	0.18	0.21	0.12	0.05	0.0	0.0	0.0	0.57
S	0.0	0.32	0.76	0.42	0.19	0.02	0.0	0.0	1.71
SSW	0.0	0.49	1.22	0.78	0.74	0.06	0.0	0.0	3.29
SW	0.01	0.40	1.29	1.26	0.33	0.04	0.0	0.0	3.33
WSW	0.0	0.16	0.26	0.18	0.21	0.0	0.0	0.0	0.81
W	0.0	0.07	0.12	0.09	0.08	0.0	0.0	0.0	0.36
WNW	0.0	0.06	0.07	0.08	0.16	0.0	0.0	0.0	0.37
NW	0.0	0.11	0.08	0.07	0.15	0.0	0.0	0.0	0.41
NNW	0.0	0.09	0.13	0.20	0.53	0.0	0.0	0.0	0.95
SUBTOTAL	0.05	4.07	6.19	4.20	3.31	0.18	0.0	0.0	18.00

CALM = 0.0

1548 STABILITY CLASS D OCCURRENCES OUT OF TOTAL 8621 VALID TEMPERATURE DIFFERENCE READINGS

1536 VALID WIND DIRECTION - WIND SPEED READINGS OUT OF TOTAL 1548 STABILITY CLASS D OCCURRENCES

ALL COLUMNS AND CALM TOTAL 100 PERCENT OF NET VALID READINGS

*METEOROLOGICAL FACILITY LOCATED .74 MILES SW OF SEQUOYAH NUCLEAR PLANT
TEMPERATURE INSTRUMENTS 33 AND 150 FEET ABOVE GROUND
WIND INSTRUMENTS 33 FEET ABOVE GROUND
"END OF HOUR TEMPERATURE READINGS"

TABLE 2.3.2-39

JOINT PERCENTAGE FREQUENCIES OF WIND DIRECTION AND WIND SPEED
FOR DIFFERENT STABILITY CLASSES*

STABILITY CLASS E
-0.5< DELTA T<= 1.5 DEG. C/100M
SEQUOYAH NUCLEAR PLANT METEOROLOGICAL FACILITY
MAY 1, 75 - APRIL 30, 76

WIND	WIND SPEED (MPH)								
DIRECTION	0.6-1.4	1.5-3.4	3.5-5.4	5.5-7.4	7.5-12.4	12.5-18.4	18.5-24.4	>=24.5	TOTAL
N	0.08	1.25	0.99	0.76	0.58	0.01	0.0	0.0	3.67
NNE	0.08	2.40	2.31	1.05	1.20	0.05	0.01	0.0	7.10
NE	0.04	0.78	0.49	0.20	0.12	0.01	0.0	0.0	1.64
ENE	0.11	0.53	0.11	0.01	0.0	0.0	0.0	0.0	0.76
E	0.06	0.32	0.07	0.0	0.0	0.0	0.0	0.0	0.45
ESE	0.04	0.15	0.01	0.0	0.0	0.0	0.0	0.0	0.20
SE	0.08	0.51	0.05	0.0	0.0	0.0	0.0	0.0	0.64
SSE	0.02	0.83	0.22	0.20	0.28	0.02	0.0	0.0	1.57
S	0.04	1.51	1.71	0.81	1.90	0.07	0.0	0.0	5.04
SSW	0.06	1.89	2.26	1.65	1.13	0.05	0.0	0.0	7.04
SW	0.04	1.37	1.86	0.99	0.49	0.07	0.0	0.0	4.82
WSW	0.02	0.78	0.50	0.20	0.27	0.02	0.0	0.0	1.79
W	0.02	0.55	0.30	0.16	0.07	0.01	0.0	0.0	1.11
WNW	0.04	0.36	0.16	0.12	0.11	0.0	0.0	0.0	0.79
NW	0.09	0.71	0.46	0.51	0.34	0.04	0.0	0.0	2.15
NNW	0.07	0.86	0.79	0.84	0.63	0.0	0.0	0.0	3.19
SUBTOTAL	0.89	14.80	12.29	7.50	6.12	0.35	0.01	0.0	41.96

CALM = 0.01

3630 STABILITY CLASS E OCCURRENCES OUT OF TOTAL 8620 VALID TEMPERATURE DIFFERENCE READINGS

3592 VALID WIND DIRECTION - WIND SPEED READINGS OUT OF TOTAL 3630 STABILITY CLASS E OCCURRENCES

ALL COLUMNS AND CALM TOTAL 100 PERCENT OF NET VALID READINGS

*METEOROLOGICAL FACILITY LOCATED .74 MILES SW OF SEQUOYAH NUCLEAR PLANT
TEMPERATURE INSTRUMENTS 33 AND 150 FEET ABOVE GROUND
WIND INSTRUMENTS 33 FEET ABOVE GROUND
"HOURLY AVERAGE TEMPERATURE"

TABLE 2.3.2-40

JOINT PERCENTAGE FREQUENCIES OF WIND DIRECTION AND WIND SPEED
FOR DIFFERENT STABILITY CLASSES*

STABILITY CLASS E
-0.5< DELTA T<= 1.5 DEG. C/100M
SEQUOYAH NUCLEAR PLANT METEOROLOGICAL FACILITY
MAY 1, 75 - APRIL 30, 76

WIND	WIND SPEED (MPH)								
DIRECTION	0.6-1.4	1.5-3.4	3.5-5.4	5.5-7.4	7.5-12.4	12.5-18.4	18.5-24.4	>=24.5	TOTAL
N	0.11	1.34	1.04	0.76	0.55	0.01	0.0	0.0	3.81
NNE	0.06	2.52	2.09	1.08	1.16	0.04	0.01	0.0	7.02
NE	0.06	0.91	0.54	0.20	0.12	0.01	0.0	0.0	1.84
ENE	0.08	0.43	0.12	0.01	0.0	0.0	0.0	0.0	0.64
E	0.06	0.33	0.01	0.0	0.0	0.0	0.0	0.0	0.40
ESE	0.05	0.19	0.01	0.0	0.0	0.0	0.0	0.0	0.25
SE	0.12	0.47	0.05	0.0	0.0	0.0	0.0	0.0	0.64
SSE	0.04	0.02	0.27	0.20	0.25	0.02	0.0	0.0	1.60
S	0.02	1.48	1.66	0.86	0.92	0.07	0.0	0.0	5.01
SSW	0.08	1.81	2.33	1.79	1.25	0.05	0.0	0.0	7.31
SW	0.04	1.39	1.90	1.19	0.53	0.05	0.0	0.01	5.11
WSW	0.04	0.71	0.50	0.19	0.27	0.04	0.0	0.0	1.75
W	0.02	0.51	0.34	0.13	0.08	0.01	0.0	0.0	1.09
WNW	0.06	0.37	0.15	0.13	0.09	0.0	0.0	0.0	0.80
NW	0.09	0.65	0.46	0.51	0.33	0.04	0.0	0.0	2.08
NNW	0.08	0.85	0.68	0.85	0.64	0.01	0.0	0.0	3.11
SUBTOTAL	1.01	14.84	12.15	7.90	6.19	0.35	0.01	0.01	42.46

CALM = 0.02

3667 STABILITY CLASS E OCCURRENCES OUT OF TOTAL 8621 VALID TEMPERATURE DIFFERENCE READINGS

3634 VALID WIND DIRECTION - WIND SPEED READINGS OUT OF TOTAL 3667 STABILITY CLASS E OCCURRENCES

ALL COLUMNS AND CALM TOTAL 100 PERCENT OF NET VALID READINGS

*METEOROLOGICAL FACILITY LOCATED .74 MILES SW OF SEQUOYAH NUCLEAR PLANT
TEMPERATURE INSTRUMENTS 33 AND 150 FEET ABOVE GROUND
WIND INSTRUMENTS 33 FEET ABOVE GROUND
"END OF HOUR TEMPERATURE READINGS"

TABLE 2.3.2-41

JOINT PERCENTAGE FREQUENCIES OF WIND DIRECTION AND WIND SPEED
FOR DIFFERENT STABILITY CLASSES*

STABILITY CLASS F
1.5< DELTA T<= 4.0 DEG. C/100M
SEQUOYAH NUCLEAR PLANT METEOROLOGICAL FACILITY
MAY 1, 75 - APRIL 30, 76

WIND	WIND SPEED (MPH)								
DIRECTION	0.6-1.4	1.5-3.4	3.5-5.4	5.5-7.4	7.5-12.4	12.5-18.4	18.5-24.4	>=24.5	TOTAL
N	0.09	1.88	0.53	0.05	0.01	0.0	0.0	0.0	2.56
NNE	0.16	4.06	1.09	0.02	0.0	0.0	0.0	0.0	5.33
NE	0.07	0.90	0.18	0.04	0.0	0.0	0.0	0.0	1.19
ENE	0.06	0.36	0.05	0.0	0.0	0.0	0.0	0.0	0.47
E	0.12	0.30	0.0	0.0	0.0	0.0	0.0	0.0	0.42
ESE	0.09	0.26	0.0	0.0	0.0	0.0	0.0	0.0	0.35
SE	0.15	0.37	0.02	0.0	0.0	0.0	0.0	0.0	0.54
SSE	0.25	0.67	0.07	0.06	0.01	0.0	0.0	0.0	1.06
S	0.11	0.91	0.44	0.05	0.02	0.0	0.0	0.0	1.53
SSW	0.12	1.39	0.74	0.34	0.09	0.0	0.0	0.0	2.68
SW	0.02	1.10	0.60	0.20	0.05	0.0	0.0	0.0	1.97
WSW	0.08	0.47	0.11	0.02	0.0	0.0	0.0	0.0	0.68
W	0.06	0.21	0.05	0.04	0.0	0.0	0.0	0.0	0.36
WNW	0.14	0.27	0.05	0.01	0.01	0.0	0.0	0.0	0.48
NW	0.02	0.42	0.21	0.07	0.01	0.0	0.0	0.0	0.73
NNW	0.07	0.72	0.34	0.05	0.01	0.0	0.0	0.0	1.19
SUBTOTAL	1.61	14.29	4.48	0.95	0.21	0.0	0.0	0.0	21.54

CALM = 0.02

1852 STABILITY CLASS F OCCURRENCES OUT OF TOTAL 8620 VALID TEMPERATURE DIFFERENCE READINGS

1843 VALID WIND DIRECTION - WIND SPEED READINGS OUT OF TOTAL 1852 STABILITY CLASS F OCCURRENCES

ALL COLUMNS AND CALM TOTAL 100 PERCENT OF NET VALID READINGS

*METEOROLOGICAL FACILITY LOCATED .74 MILES SW OF SEQUOYAH NUCLEAR PLANT
TEMPERATURE INSTRUMENTS 33 AND 150 FEET ABOVE GROUND
WIND INSTRUMENTS 33 FEET ABOVE GROUND
"HOURLY AVERAGE TEMPERATURE"

TABLE 2.3.2-42

JOINT PERCENTAGE FREQUENCIES OF WIND DIRECTION AND WIND SPEED
FOR DIFFERENT STABILITY CLASSES*

STABILITY CLASS F
1.5< DELTA T<= 4.0 DEG. C/100M
SEQUOYAH NUCLEAR PLANT METEOROLOGICAL FACILITY
MAY 1, 75 - APRIL 30, 76

WIND DIRECTION	WIND SPEED (MPH) 0.6-1.4	1.5-3.4	3.5-5.4	5.5-7.4	7.5-12.4	12.5-18.4	18.5-24.4	>=24.5	TOTAL
N	0.07	1.59	0.42	0.07	0.02	0.0	0.0	0.0	2.17
NNE	0.20	3.58	1.19	0.04	0.05	0.0	0.0	0.0	5.06
NE	0.06	0.71	0.22	0.05	0.0	0.0	0.0	0.0	1.04
ENE	0.07	0.35	0.02	0.0	0.0	0.0	0.0	0.0	0.44
E	0.13	0.27	0.02	0.0	0.0	0.0	0.0	0.0	0.42
ESE	0.12	0.23	0.02	0.0	0.0	0.0	0.0	0.0	0.37
SE	0.12	0.34	0.01	0.0	0.0	0.0	0.0	0.0	0.47
SSE	0.16	0.68	0.06	0.05	0.05	0.0	0.0	0.0	1.00
S	0.12	0.89	0.43	0.08	0.02	0.01	0.0	0.0	1.55
SSW	0.08	1.36	0.63	0.35	0.09	0.0	0.0	0.0	2.51
SW	0.01	1.02	0.68	0.15	0.06	0.0	0.0	0.0	1.92
WSW	0.07	0.50	0.09	0.02	0.01	0.0	0.0	0.0	0.69
W	0.08	0.19	0.05	0.04	0.0	0.0	0.0	0.0	0.34
WNW	0.07	0.20	0.06	0.01	0.0	0.0	0.0	0.0	0.34
NW	0.01	0.41	0.19	0.11	0.01	0.0	0.0	0.0	0.73
NNW	0.06	0.67	0.39	0.04	0.0	0.0	0.0	0.0	1.16
SUBTOTAL	1.41	12.99	4.48	1.01	0.31	0.01	0.0	0.0	20.21

CALM = 0.01

1739 STABILITY CLASS F OCCURRENCES OUT OF TOTAL 8621 VALID TEMPERATURE DIFFERENCE READINGS

1728 VALID WIND DIRECTION - WIND SPEED READINGS OUT OF TOTAL 1739 STABILITY CLASS F OCCURRENCES

ALL COLUMNS AND CALM TOTAL 100 PERCENT OF NET VALID READINGS

*METEOROLOGICAL FACILITY LOCATED .74 MILES SW OF SEQUOYAH NUCLEAR PLANT
TEMPERATURE INSTRUMENTS 33 AND 150 FEET ABOVE GROUND
WIND INSTRUMENTS 33 FEET ABOVE GROUND
"END OF HOUR TEMPERATURE READINGS"

TABLE 2.3.2-43

JOINT PERCENTAGE FREQUENCIES OF WIND DIRECTION AND WIND SPEED
FOR DIFFERENT STABILITY CLASSES*

STABILITY CLASS G
DELTA T > 4.0 DEG. C/100M
SEQUOYAH NUCLEAR PLANT METEOROLOGICAL FACILITY
MAY 1, 75 - APRIL 30, 76

WIND DIRECTION	WIND SPEED (MPH) 0.6-1.4	1.5-3.4	3.5-5.4	5.5-7.4	7.5-12.4	12.5-18.4	18.5-24.4	>=24.5	TOTAL
N	0.06	0.41	0.13	0.01	0.0	0.0	0.0	0.0	0.61
NNE	0.07	1.75	0.50	0.02	0.0	0.0	0.0	0.0	2.34
NE	0.12	0.72	0.11	0.01	0.0	0.0	0.0	0.0	0.96
ENE	0.15	0.48	0.0	0.0	0.0	0.0	0.0	0.0	0.63
E	0.21	0.29	0.0	0.0	0.0	0.0	0.0	0.0	0.50
ESE	0.19	0.11	0.02	0.0	0.0	0.0	0.0	0.0	0.32
SE	0.07	0.12	0.0	0.0	0.0	0.0	0.0	0.0	0.19
SSE	0.09	0.40	0.0	0.0	0.0	0.0	0.0	0.0	0.49
S	0.09	0.71	0.05	0.0	0.0	0.0	0.0	0.0	0.85
SSW	0.02	0.98	0.51	0.0	0.0	0.0	0.0	0.0	1.51
SW	0.02	0.44	0.56	0.04	0.0	0.0	0.0	0.0	1.06
WSW	0.01	0.12	0.02	0.0	0.0	0.0	0.0	0.0	0.15
W	0.02	0.04	0.01	0.0	0.0	0.0	0.0	0.0	0.07
WNW	0.02	0.06	0.01	0.0	0.01	0.0	0.0	0.0	0.10
NW	0.0	0.06	0.01	0.01	0.0	0.0	0.0	0.0	0.08
NNW	0.0	0.08	0.0	0.0	0.0	0.0	0.0	0.0	0.08
SUBTOTAL	1.14	6.77	1.93	0.09	0.01	0.0	0.0	0.0	9.94

CALM = 0.02

855 STABILITY CLASS G OCCURRENCES OUT OF TOTAL 8620 VALID TEMPERATURE DIFFERENCE READINGS

855 VALID WIND DIRECTION - WIND SPEED READINGS OUT OF TOTAL 855 STABILITY CLASS G OCCURRENCES

ALL COLUMNS AND CALM TOTAL 100 PERCENT OF NET VALID READINGS

*METEOROLOGICAL FACILITY LOCATED .74 MILES SW OF SEQUOYAH NUCLEAR PLANT
TEMPERATURE INSTRUMENTS 33 AND 150 FEET ABOVE GROUND
WIND INSTRUMENTS 33 FEET ABOVE GROUND
"HOURLY AVERAGE TEMPERATURE"

TABLE 2.3.2-44

JOINT PERCENTAGE FREQUENCIES OF WIND DIRECTION AND WIND SPEED
FOR DIFFERENT STABILITY CLASSES*

STABILITY CLASS G
DELTA T > 4.0 DEG. C/100M
SEQUOYAH NUCLEAR PLANT METEOROLOGICAL FACILITY
MAY 1, 75 - APRIL 30, 76

WIND	WIND SPEED (MPH)								
DIRECTION	0.6-1.4	1.5-3.4	3.5-5.4	5.5-7.4	7.5-12.4	12.5-18.4	18.5-24.4	>=24.5	TOTAL
N	0.08	0.56	0.20	0.0	0.0	0.0	0.0	0.0	0.82
NNE	0.04	1.73	0.42	0.01	0.0	0.0	0.0	0.0	2.20
NE	0.11	0.85	0.08	0.01	0.0	0.0	0.0	0.0	1.05
ENE	0.15	0.54	0.01	0.0	0.0	0.0	0.0	0.0	0.70
E	0.20	0.32	0.0	0.0	0.0	0.0	0.0	0.0	0.52
ESE	0.15	0.12	0.01	0.0	0.0	0.0	0.0	0.0	0.28
SE	0.07	0.20	0.01	0.0	0.0	0.0	0.0	0.0	0.28
SSE	0.15	0.44	0.01	0.01	0.0	0.0	0.0	0.0	0.61
S	0.09	0.69	0.08	0.0	0.0	0.0	0.0	0.0	0.86
SSW	0.04	1.00	0.56	0.01	0.0	0.0	0.0	0.0	1.61
SW	0.04	0.55	0.55	0.05	0.0	0.0	0.0	0.0	1.19
WSW	0.01	0.13	0.02	0.0	0.0	0.0	0.0	0.0	0.16
W	0.02	0.08	0.01	0.0	0.0	0.0	0.0	0.0	0.11
WNW	0.06	0.09	0.0	0.0	0.01	0.0	0.0	0.0	0.16
NW	0.0	0.08	0.04	0.01	0.0	0.0	0.0	0.0	0.13
NNW	0.0	0.12	0.05	0.01	0.01	0.0	0.0	0.0	0.19
SUBTOTAL	1.19	7.50	2.05	0.11	0.02	0.0	0.0	0.0	10.87

CALM = 0.02

934 STABILITY CLASS G OCCURRENCES OUT OF TOTAL 8621 VALID TEMPERATURE DIFFERENCE READINGS

933 VALID WIND DIRECTION - WIND SPEED READINGS OUT OF TOTAL 934 STABILITY CLASS G OCCURRENCES

ALL COLUMNS AND CALM TOTAL 100 PERCENT OF NET VALID READINGS

*METEOROLOGICAL FACILITY LOCATED .74 MILES SW OF SEQUOYAH NUCLEAR PLANT
TEMPERATURE INSTRUMENTS 33 AND 150 FEET ABOVE GROUND
WIND INSTRUMENTS 33 FEET ABOVE GROUND
"END OF HOUR TEMPERATURE READINGS"

TABLE 2.3.2-45

JOINT PERCENTAGE FREQUENCIES OF WIND DIRECTION AND WIND SPEED
FOR DIFFERENT STABILITY CLASSES*

STABILITY CLASS A
DELTA T<=-1.9 DEG. C/100M
SEQUOYAH NUCLEAR PLANT METEOROLOGICAL FACILITY
MAY 1, 75 - APRIL 30, 76

WIND	WIND SPEED (MPH)								
DIRECTION	0.6-1.4	1.5-3.4	3.5-5.4	5.5-7.4	7.5-12.4	12.5-18.4	18.5-24.4	>=24.5	TOTAL
N	0.0	0.0	0.0	0.0	0.02	0.0	0.0	0.0	0.02
NNE	0.0	0.0	0.0	0.0	0.0	0.04	0.0	0.0	0.04
NE	0.0	0.0	0.0	0.0	0.02	0.01	0.0	0.0	0.03
ENE	0.0	0.0	0.0	0.0	0.02	0.0	0.0	0.0	0.02
E	0.0	0.0	0.0	0.0	0.0	0.0	0.0	0.0	0.0
ESE	0.0	0.0	0.0	0.0	0.0	0.0	0.0	0.0	0.0
SE	0.0	0.0	0.0	0.0	0.0	0.0	0.0	0.0	0.0
SSE	0.0	0.0	0.0	0.0	0.0	0.0	0.0	0.0	0.0
S	0.0	0.0	0.0	0.0	0.0	0.01	0.0	0.0	0.01
SSW	0.0	0.0	0.0	0.0	0.0	0.0	0.0	0.0	0.0
SW	0.0	0.0	0.0	0.0	0.0	0.0	0.0	0.0	0.0
WSW	0.0	0.0	0.0	0.0	0.01	0.0	0.0	0.0	0.01
W	0.0	0.0	0.0	0.0	0.0	0.0	0.0	0.0	0.0
WNW	0.0	0.0	0.0	0.0	0.0	0.0	0.0	0.0	0.0
NW	0.0	0.0	0.0	0.0	0.0	0.0	0.0	0.0	0.0
NNW	0.0	0.0	0.0	0.0	0.0	0.01	0.0	0.0	0.01
SUBTOTAL	0.0	0.0	0.0	0.0	0.07	0.07	0.0	0.0	0.14

CALM = 0.0

13 STABILITY CLASS A OCCURRENCES OUT OF TOTAL 8589 VALID TEMPERATURE DIFFERENCE READINGS

13 VALID WIND DIRECTION - WIND SPEED READINGS OUT OF TOTAL 13 STABILITY CLASS A OCCURRENCES

ALL COLUMNS AND CALM TOTAL 100 PERCENT OF NET VALID READINGS

*METEOROLOGICAL FACILITY LOCATED .74 MILES SW OF SEQUOYAH NUCLEAR PLANT
TEMPERATURE INSTRUMENTS 33 AND 300 FEET ABOVE GROUND
WIND INSTRUMENTS 300 FEET ABOVE GROUND
"HOURLY AVERAGE TEMPERATURE"

TABLE 2.3.2-46

JOINT PERCENTAGE FREQUENCIES OF WIND DIRECTION AND WIND SPEED
FOR DIFFERENT STABILITY CLASSES*

STABILITY CLASS A
DELTA T<=-1.9 DEG. C/100M
SEQUOYAH NUCLEAR PLANT METEOROLOGICAL FACILITY
MAY 1, 75 - APRIL 30, 76

WIND	WIND SPEED (MPH)								
DIRECTION	0.6-1.4	1.5-3.4	3.5-5.4	5.5-7.4	7.5-12.4	12.5-18.4	18.5-24.4	>=24.5	TOTAL
N	0.0	0.0	0.0	0.0	0.01	0.02	0.0	0.0	0.03
NNE	0.0	0.0	0.0	0.0	0.06	0.04	0.0	0.0	0.10
NE	0.0	0.0	0.01	0.0	0.06	0.04	0.0	0.0	0.11
ENE	0.0	0.0	0.01	0.0	0.06	0.0	0.0	0.0	0.07
E	0.0	0.0	0.01	0.0	0.0	0.0	0.0	0.0	0.01
ESE	0.0	0.0	0.0	0.0	0.0	0.0	0.0	0.0	0.0
SE	0.0	0.0	0.02	0.0	0.0	0.0	0.0	0.0	0.02
SSE	0.0	0.0	0.0	0.01	0.0	0.0	0.0	0.0	0.01
S	0.0	0.0	0.0	0.0	0.0	0.0	0.0	0.0	0.0
SSW	0.0	0.0	0.0	0.0	0.05	0.0	0.01	0.0	0.06
SW	0.0	0.01	0.0	0.01	0.02	0.01	0.0	0.0	0.05
WSW	0.01	0.0	0.0	0.01	0.04	0.0	0.0	0.0	0.06
W	0.0	0.0	0.0	0.0	0.0	0.0	0.0	0.0	0.0
WNW	0.0	0.0	0.0	0.0	0.0	0.02	0.0	0.0	0.02
NW	0.0	0.0	0.0	0.0	0.01	0.01	0.0	0.0	0.02
NNW	0.0	0.0	0.0	0.0	0.04	0.01	0.01	0.0	0.06
SUBTOTAL	0.01	0.01	0.05	0.03	0.35	0.15	0.02	0.0	0.62

CALM = 0.0

54 STABILITY CLASS A OCCURRENCES OUT OF TOTAL 8590 VALID TEMPERATURE DIFFERENCE READINGS

54 VALID WIND DIRECTION - WIND SPEED READINGS OUT OF TOTAL 54 STABILITY CLASS A OCCURRENCES

ALL COLUMNS AND CALM TOTAL 100 PERCENT OF NET VALID READINGS

*METEOROLOGICAL FACILITY LOCATED .74 MILES SW OF SEQUOYAH NUCLEAR PLANT
TEMPERATURE INSTRUMENTS 33 AND 300 FEET ABOVE GROUND
WIND INSTRUMENTS 300 FEET ABOVE GROUND
"END OF HOUR TEMPERATURE READINGS"

TABLE 2.3.2-47

JOINT PERCENTAGE FREQUENCIES OF WIND DIRECTION AND WIND SPEED
FOR DIFFERENT STABILITY CLASSES*

STABILITY CLASS B
-1.9< DELTA T<=-1.7 DEG. C/100M
SEQUOYAH NUCLEAR PLANT METEOROLOGICAL FACILITY
MAY 1, 75 - APRIL 30, 76

WIND	WIND SPEED (MPH)								
DIRECTION	0.6-1.4	1.5-3.4	3.5-5.4	5.5-7.4	7.5-12.4	12.5-18.4	18.5-24.4	>=24.5	TOTAL
N	0.0	0.0	0.0	0.01	0.05	0.06	0.0	0.0	0.12
NNE	0.0	0.0	0.0	0.0	0.15	0.02	0.01	0.0	0.18
NE	0.0	0.0	0.0	0.02	0.11	0.07	0.0	0.0	0.20
ENE	0.0	0.0	0.0	0.01	0.02	0.0	0.0	0.0	0.03
E	0.0	0.0	0.0	0.0	0.0	0.0	0.0	0.0	0.0
ESE	0.0	0.0	0.02	0.01	0.0	0.0	0.0	0.0	0.03
SE	0.0	0.0	0.01	0.0	0.0	0.0	0.0	0.0	0.01
SSE	0.0	0.0	0.0	0.0	0.0	0.0	0.0	0.0	0.0
S	0.0	0.0	0.0	0.0	0.0	0.02	0.0	0.0	0.02
SSW	0.0	0.0	0.0	0.0	0.02	0.05	0.01	0.0	0.08
SW	0.0	0.0	0.0	0.0	0.01	0.02	0.0	0.0	0.03
WSW	0.0	0.0	0.0	0.0	0.0	0.0	0.0	0.04	0.04
W	0.0	0.0	0.0	0.0	0.0	0.0	0.0	0.0	0.0
WNW	0.0	0.0	0.0	0.0	0.0	0.0	0.0	0.0	0.0
NW	0.0	0.0	0.0	0.0	0.01	0.04	0.0	0.0	0.05
NNW	0.0	0.0	0.0	0.0	0.05	0.04	0.01	0.0	0.10
SUBTOTAL	0.0	0.0	0.03	0.05	0.42	0.32	0.03	0.04	0.89

CALM = 0.0

78 STABILITY CLASS B OCCURRENCES OUT OF TOTAL 8589 VALID TEMPERATURE DIFFERENCE READINGS

77 VALID WIND DIRECTION - WIND SPEED READINGS OUT OF TOTAL 78 STABILITY CLASS B OCCURRENCES

ALL COLUMNS AND CALM TOTAL 100 PERCENT OF NET VALID READINGS

*METEOROLOGICAL FACILITY LOCATED .74 MILES SW OF SEQUOYAH NUCLEAR PLANT
TEMPERATURE INSTRUMENTS 33 AND 300 FEET ABOVE GROUND
WIND INSTRUMENTS 300 FEET ABOVE GROUND
"HOURLY AVERAGE TEMPERATURE"

TABLE 2.3.2-48

JOINT PERCENTAGE FREQUENCIES OF WIND DIRECTION AND WIND SPEED
FOR DIFFERENT STABILITY CLASSES*

STABILITY CLASS B
-1.9 < DELTA T<=-1.7 DEG. C/100M
SEQUOYAH NUCLEAR PLANT METEOROLOGICAL FACILITY
MAY 1, 75 - APRIL 30, 76

WIND	WIND SPEED (MPH)								
DIRECTION	0.6-1.4	1.5-3.4	3.5-5.4	5.5-7.4	7.5-12.4	12.5-18.4	18.5-24.4	>=24.5	TOTAL
N	0.0	0.0	0.0	0.0	0.05	0.02	0.0	0.0	0.07
NNE	0.0	0.0	0.01	0.0	0.11	0.02	0.02	0.0	0.16
NE	0.0	0.0	0.02	0.04	0.08	0.06	0.0	0.0	0.20
ENE	0.0	0.0	0.02	0.01	0.0	0.0	0.0	0.0	0.03
E	0.0	0.0	0.0	0.0	0.0	0.0	0.0	0.0	0.0
ESE	0.0	0.0	0.01	0.01	0.0	0.0	0.0	0.0	0.02
SE	0.0	0.0	0.02	0.0	0.0	0.0	0.0	0.0	0.02
SSE	0.0	0.0	0.0	0.0	0.0	0.0	0.0	0.0	0.0
S	0.0	0.0	0.0	0.01	0.01	0.02	0.01	0.0	0.05
SSW	0.0	0.0	0.0	0.02	0.07	0.14	0.0	0.01	0.24
SW	0.0	0.0	0.0	0.04	0.07	0.08	0.0	0.0	0.19
WSW	0.0	0.0	0.01	0.0	0.0	0.0	0.0	0.02	0.03
W	0.0	0.0	0.0	0.0	0.01	0.0	0.0	0.0	0.01
WNW	0.0	0.0	0.0	0.0	0.0	0.02	0.0	0.0	0.02
NW	0.0	0.0	0.0	0.0	0.01	0.04	0.0	0.0	0.05
NNW	0.0	0.0	0.0	0.0	0.02	0.01	0.0	0.0	0.03
SUBTOTAL	0.0	0.0	0.09	0.13	0.43	0.41	0.03	0.03	1.12

CALM = 0.0

100 STABILITY CLASS B OCCURRENCES OUT OF TOTAL 8590 VALID TEMPERATURE DIFFERENCE READINGS

99 VALID WIND DIRECTION - WIND SPEED READINGS OUT OF TOTAL 100 STABILITY CLASS B OCCURRENCES

ALL COLUMNS AND CALM TOTAL 100 PERCENT OF NET VALID READINGS
*METEOROLOGICAL FACILITY LOCATED .74 MILES SW OF SEQUOYAH NUCLEAR PLANT
TEMPERATURE INSTRUMENTS 33 AND 300 FEET ABOVE GROUND
WIND INSTRUMENTS 300 FEET ABOVE GROUND
"END OF HOUR TEMPERATURE READINGS"

TABLE 2.3.2-49

JOINT PERCENTAGE FREQUENCIES OF WIND DIRECTION AND WIND SPEED
FOR DIFFERENT STABILITY CLASSES*

STABILITY CLASS C
-1.7 < DELTA T<=-1.5 DEG. C/100M
SEQUOYAH NUCLEAR PLANT METEOROLOGICAL FACILITY
MAY 1, 75 - APRIL 30, 76

WIND	WIND SPEED (MPH)								
DIRECTION	0.6-1.4	1.5-3.4	3.5-5.4	5.5-7.4	7.5-12.4	12.5-18.4	18.5-24.4	>=24.5	TOTAL
N	0.0	0.0	0.0	0.01	0.09	0.08	0.06	0.0	0.24
NNE	0.0	0.0	0.05	0.02	0.18	0.09	0.01	0.0	0.35
NE	0.0	0.01	0.02	0.02	0.22	0.16	0.02	0.0	0.45
ENE	0.0	0.01	0.04	0.02	0.02	0.0	0.0	0.0	0.09
E	0.0	0.01	0.01	0.0	0.0	0.0	0.0	0.0	0.02
ESE	0.0	0.0	0.0	0.02	0.0	0.0	0.0	0.0	0.02
SE	0.0	0.0	0.02	0.0	0.0	0.0	0.0	0.0	0.02
SSE	0.0	0.0	0.01	0.01	0.0	0.0	0.0	0.0	0.02
S	0.0	0.0	0.0	0.0	0.04	0.01	0.01	0.01	0.07
SSW	0.0	0.0	0.0	0.01	0.14	0.21	0.04	0.02	0.42
SW	0.0	0.0	0.0	0.02	0.13	0.14	0.01	0.0	0.30
WSW	0.0	0.0	0.0	0.0	0.02	0.0	0.01	0.0	0.03
W	0.0	0.0	0.0	0.0	0.02	0.01	0.0	0.0	0.03
WNW	0.0	0.0	0.0	0.0	0.01	0.05	0.0	0.0	0.06
NW	0.0	0.0	0.0	0.0	0.06	0.08	0.01	0.0	0.15
NNW	0.0	0.01	0.0	0.0	0.02	0.07	0.0	0.0	0.10
SUBTOTAL	0.0	0.04	0.15	0.13	0.95	0.90	0.17	0.03	2.37

CALM = 0.0

208 STABILITY CLASS C OCCURRENCES OUT OF TOTAL 8589 VALID TEMPERATURE DIFFERENCE READINGS

208 VALID WIND DIRECTION - WIND SPEED READINGS OUT OF TOTAL 208 STABILITY CLASS C OCCURRENCES

ALL COLUMNS AND CALM TOTAL 100 PERCENT OF NET VALID READINGS

*METEOROLOGICAL FACILITY LOCATED .74 MILES SW OF SEQUOYAH NUCLEAR PLANT
TEMPERATURE INSTRUMENTS 33 AND 300 FEET ABOVE GROUND
WIND INSTRUMENTS 300 FEET ABOVE GROUND
"HOURLY AVERAGE TEMPERATURE"

TABLE 2.3.2-50

JOINT PERCENTAGE FREQUENCIES OF WIND DIRECTION AND WIND SPEED
FOR DIFFERENT STABILITY CLASSES*

STABILITY CLASS C
-1.7< DELTA T<= -1.5 DEG. C/100M
SEQUOYAH NUCLEAR PLANT METEOROLOGICAL FACILITY
MAY 1, 75 - APRIL 30, 76

WIND	WIND SPEED (MPH)								
DIRECTION	0.6-1.4	1.5-3.4	3.5-5.4	5.5-7.4	7.5-12.4	12.5-18.4	18.5-24.4	>=24.5	TOTAL
N	0.0	0.0	0.0	0.04	0.12	0.06	0.04	0.0	0.26
NNE	0.0	0.01	0.05	0.04	0.23	0.12	0.0	0.0	0.45
NE	0.0	0.05	0.01	0.07	0.11	0.14	0.04	0.0	0.42
ENE	0.0	0.0	0.01	0.01	0.0	0.0	0.01	0.0	0.03
E	0.0	0.0	0.05	0.01	0.0	0.0	0.0	0.0	0.06
ESE	0.0	0.01	0.01	0.02	0.0	0.0	0.0	0.0	0.04
SE	0.0	0.0	0.02	0.01	0.0	0.01	0.0	0.0	0.04
SSE	0.0	0.01	0.0	0.02	0.02	0.0	0.0	0.0	0.05
S	0.0	0.0	0.0	0.0	0.02	0.01	0.0	0.0	0.03
SSW	0.0	0.02	0.01	0.05	0.13	0.15	0.01	0.01	0.38
SW	0.0	0.0	0.06	0.09	0.22	0.06	0.0	0.0	0.43
WSW	0.0	0.0	0.01	0.02	0.07	0.0	0.01	0.01	0.12
W	0.0	0.02	0.0	0.01	0.0	0.01	0.0	0.0	0.04
WNW	0.0	0.0	0.0	0.0	0.0	0.05	0.0	0.0	0.05
NW	0.0	0.0	0.0	0.0	0.0	0.06	0.01	0.0	0.07
NNW	0.0	0.0	0.0	0.0	0.02	0.12	0.0	0.0	0.14
SUBTOTAL	0.0	0.12	0.23	0.39	0.94	0.79	0.12	0.02	2.61

CALM = 0.0

225 STABILITY CLASS C OCCURRENCES OUT OF TOTAL 8590 VALID TEMPERATURE DIFFERENCE READINGS

225 VALID WIND DIRECTION - WIND SPEED READINGS OUT OF TOTAL 225 STABILITY CLASS C OCCURRENCES

ALL COLUMNS AND CALM TOTAL 100 PERCENT OF NET VALID READINGS

*METEOROLOGICAL FACILITY LOCATED .74 MILES SW OF SEQUOYAH NUCLEAR PLANT
TEMPERATURE INSTRUMENTS 33 AND 300 FEET ABOVE GROUND
WIND INSTRUMENTS 300 FEET ABOVE GROUND
"END OF HOUR TEMPERATURE READINGS"

TABLE 2.3.2-51

JOINT PERCENTAGE FREQUENCIES OF WIND DIRECTION AND WIND SPEED
FOR DIFFERENT STABILITY CLASSES*

STABILITY CLASS D
-1.5< DELTA T<=-0.5 DEG. C/100M
SEQUOYAH NUCLEAR PLANT METEOROLOGICAL FACILITY
MAY 1, 75 - APRIL 30, 76

WIND	WIND SPEED (MPH)								
DIRECTION	0.6-1.4	1.5-3.4	3.5-5.4	5.5-7.4	7.5-12.4	12.5-18.4	18.5-24.4	>=24.5	TOTAL
N	0.01	0.13	0.25	0.22	0.68	0.96	0.29	0.01	2.55
NNE	0.0	0.29	0.55	0.74	1.63	0.84	0.14	0.0	4.19
NE	0.0	0.50	0.60	0.56	0.90	0.55	0.09	0.0	3.20
ENE	0.0	0.32	0.38	0.20	0.19	0.01	0.11	0.0	1.21
E	0.0	0.21	0.25	0.08	0.05	0.02	0.01	0.0	0.62
ESE	0.0	0.18	0.12	0.05	0.04	0.0	0.0	0.0	0.39
SE	0.0	0.12	0.33	0.04	0.02	0.01	0.0	0.0	0.52
SSE	0.0	0.18	0.27	0.14	0.11	0.12	0.0	0.0	0.82
S	0.0	0.38	0.36	0.28	0.45	0.46	0.22	0.04	2.19
SSW	0.0	0.34	0.93	0.81	1.91	1.00	0.21	0.05	5.25
SW	0.01	0.25	1.34	1.29	2.06	0.46	0.08	0.04	5.53
WSW	0.0	0.22	0.59	0.49	0.54	0.26	0.07	0.0	2.17
W	0.01	0.16	0.11	0.09	0.25	0.21	0.07	0.02	0.92
WNW	0.0	0.04	0.05	0.05	0.28	0.25	0.05	0.0	0.72
NW	0.0	0.04	0.09	0.08	0.47	0.64	0.13	0.04	1.49
NNW	0.0	0.05	0.08	0.12	0.63	0.70	0.20	0.0	1.78
SUBTOTAL	0.03	3.41	6.30	5.24	10.21	6.49	1.67	0.20	33.55

CALM = 0.0

2873 STABILITY CLASS D OCCURRENCES OUT OF TOTAL 8589 VALID TEMPERATURE DIFFERENCE READINGS

2857 VALID WIND DIRECTION - WIND SPEED READINGS OUT OF TOTAL 2873 STABILITY CLASS D OCCURRENCES

ALL COLUMNS AND CALM TOTAL 100 PERCENT OF NET VALID READINGS

*METEOROLOGICAL FACILITY LOCATED .74 MILES SW OF SEQUOYAH NUCLEAR PLANT
TEMPERATURE INSTRUMENTS 33 AND 300 FEET ABOVE GROUND
WIND INSTRUMENTS 300 FEET ABOVE GROUND
"HOURLY AVERAGE TEMPERATURE"

TABLE 2.3.2-52

JOINT PERCENTAGE FREQUENCIES OF WIND DIRECTION AND WIND SPEED
FOR DIFFERENT STABILITY CLASSES*

STABILITY CLASS D
-1.5< DELTA T<=-0.5 DEG. C/100M
SEQUOYAH NUCLEAR PLANT METEOROLOGICAL FACILITY
MAY 1, 75 - APRIL 30, 76

WIND DIRECTION	WIND SPEED (MPH) 0.6-1.4	1.5-3.4	3.5-5.4	5.5-7.4	7.5-12.4	12.5-18.4	18.5-24.4	>=24.5	TOTAL
N	0.01	0.09	0.23	0.20	0.61	1.02	0.32	0.01	2.49
NNE	0.0	0.30	0.61	0.75	1.63	0.88	0.20	0.0	4.37
NE	0.0	0.48	0.56	0.57	1.05	0.57	0.11	0.0	3.34
ENE	0.0	0.30	0.38	0.22	0.16	0.01	0.07	0.0	1.14
E	0.0	0.23	0.19	0.07	0.05	0.02	0.01	0.0	0.57
ESE	0.01	0.18	0.12	0.06	0.04	0.0	0.0	0.0	0.41
SE	0.0	0.13	0.27	0.01	0.01	0.0	0.0	0.0	0.42
SSE	0.0	0.18	0.27	0.09	0.08	0.08	0.0	0.0	0.70
S	0.0	0.41	0.34	0.28	0.36	0.47	0.20	0.04	2.10
SSW	0.0	0.27	1.00	0.74	1.79	1.04	0.21	0.05	5.10
SW	0.0	0.26	1.30	1.14	1.88	0.46	0.08	0.05	5.17
WSW	0.0	0.16	0.57	0.46	0.42	0.25	0.08	0.0	1.94
W	0.01	0.12	0.12	0.08	0.27	0.22	0.08	0.02	0.92
WNW	0.0	0.05	0.05	0.05	0.30	0.19	0.05	0.0	0.69
NW	0.0	0.06	0.07	0.08	0.49	0.64	0.11	0.02	1.47
NNW	0.0	0.07	0.05	0.13	0.66	0.69	0.20	0.0	1.80
SUBTOTAL	0.03	3.29	6.13	4.93	9.80	6.54	1.72	0.19	32.63

CALM = 0.0

2800 STABILITY CLASS D OCCURRENCES OUT OF TOTAL 8590 VALID TEMPERATURE DIFFERENCE READINGS

2785 VALID WIND DIRECTION - WIND SPEED READINGS OUT OF TOTAL 2800 STABILITY CLASS D OCCURRENCES

ALL COLUMNS AND CALM TOTAL 100 PERCENT OF NET VALID READINGS

*METEOROLOGICAL FACILITY LOCATED .74 MILES SW OF SEQUOYAH NUCLEAR PLANT
TEMPERATURE INSTRUMENTS 33 AND 300 FEET ABOVE GROUND
WIND INSTRUMENTS 300 FEET ABOVE GROUND
"END OF HOUR TEMPERATURE READINGS"

TABLE 2.3.2-53

JOINT PERCENTAGE FREQUENCIES OF WIND DIRECTION AND WIND SPEED
FOR DIFFERENT STABILITY CLASSES*

STABILITY CLASS E
-0.5< DELTA T<= 1.5 DEG. C/100M
SEQUOYAH NUCLEAR PLANT METEOROLOGICAL FACILITY
MAY 1, 75 - APRIL 30, 76

WIND	WIND SPEED (MPH)								
DIRECTION	0.6-1.4	1.5-3.4	3.5-5.4	5.5-7.4	7.5-12.4	12.5-18.4	18.5-24.4	>=24.5	TOTAL
N	0.06	0.23	0.22	0.27	0.89	0.70	0.13	0.0	2.50
NNE	0.0	0.41	0.84	0.89	2.11	1.10	0.22	0.04	5.61
NE	0.01	0.46	0.67	0.73	1.10	0.27	0.18	0.02	3.44
ENE	0.01	0.33	0.29	0.08	0.18	0.06	0.0	0.0	0.95
E	0.01	0.14	0.14	0.08	0.11	0.02	0.0	0.0	0.50
ESE	0.02	0.23	0.06	0.07	0.0	0.01	0.0	0.0	0.39
SE	0.01	0.21	0.12	0.06	0.05	0.02	0.0	0.0	0.47
SSE	0.02	0.27	0.14	0.11	0.35	0.23	0.07	0.0	1.19
S	0.02	0.47	0.36	0.39	0.96	1.15	0.39	0.12	3.86
SSW	0.04	0.41	1.30	1.29	2.93	2.41	0.49	0.07	8.94
SW	0.01	0.43	1.11	1.27	2.20	0.71	0.25	0.05	6.03
WSW	0.05	0.38	0.52	0.46	0.75	0.20	0.05	0.0	2.41
W	0.02	0.13	0.15	0.25	0.25	0.15	0.04	0.0	0.99
WNW	0.01	0.18	0.09	0.09	0.30	0.08	0.0	0.0	1.75
NW	0.0	0.14	0.18	0.15	0.52	0.35	0.09	0.0	1.43
NNW	0.0	0.26	0.16	0.16	0.76	0.35	0.02	0.0	1.71
SUBTOTAL	0.29	4.68	6.35	6.35	13.46	7.81	1.93	0.30	41.17

CALM = 0.0

3542 STABILITY CLASS E OCCURRENCES OUT OF TOTAL 8589 VALID TEMPERATURE DIFFERENCE READINGS

3515 VALID WIND DIRECTION - WIND SPEED READINGS OUT OF TOTAL 3542 STABILITY CLASS E OCCURRENCES

ALL COLUMNS AND CALM TOTAL 100 PERCENT OF NET VALID READINGS

*METEOROLOGICAL FACILITY LOCATED .74 MILES SW OF SEQUOYAH NUCLEAR PLANT
TEMPERATURE INSTRUMENTS 33 AND 300 FEET ABOVE GROUND
WIND INSTRUMENTS 300 FEET ABOVE GROUND
"HOURLY AVERAGE TEMPERATURE"

TABLE 2.3.2-54

JOINT PERCENTAGE FREQUENCIES OF WIND DIRECTION AND WIND SPEED
FOR DIFFERENT STABILITY CLASSES*

STABILITY CLASS E
-0.5< DELTA T<= 1.5 DEG. C/100M
SEQUOYAH NUCLEAR PLANT METEOROLOGICAL FACILITY
MAY 1, 75 - APRIL 30, 76

WIND DIRECTION	WIND SPEED (MPH) 0.6-1.4	1.5-3.4	3.5-5.4	5.5-7.4	7.5-12.4	12.5-18.4	18.5-24.4	>=24.5	TOTAL
N	0.05	0.32	0.23	0.33	0.93	0.68	0.13	0.0	2.67
NNE	0.0	0.39	0.76	0.82	2.16	1.04	0.16	0.04	5.37
NE	0.01	0.49	0.66	0.68	1.01	0.26	0.15	0.02	3.28
ENE	0.01	0.32	0.27	0.06	0.20	0.09	0.02	0.0	0.97
E	0.0	0.13	0.16	0.07	0.09	0.02	0.0	0.0	0.47
ESE	0.01	0.22	0.06	0.06	0.0	0.01	0.0	0.0	0.36
SE	0.01	0.20	0.13	0.06	0.06	0.04	0.0	0.0	0.50
SSE	0.02	0.27	0.12	0.13	0.33	0.28	0.07	0.0	1.22
S	0.01	0.41	0.38	0.38	1.00	1.13	0.41	0.13	3.85
SSW	0.04	0.45	1.24	1.31	2.99	2.39	0.50	0.07	8.99
SW	0.02	0.42	1.10	1.38	2.25	0.74	0.25	0.05	6.21
WSW	0.05	0.43	0.48	0.56	0.76	0.21	0.04	0.0	2.53
W	0.01	0.15	0.16	0.22	0.26	0.13	0.02	0.0	0.95
WNW	0.01	0.14	0.07	0.08	0.28	0.11	0.0	0.0	0.69
NW	0.0	0.12	0.20	0.15	0.53	0.35	0.12	0.01	1.48
NNW	0.0	0.26	0.19	0.16	0.71	0.33	0.02	0.0	1.67
SUBTOTAL	0.25	4.72	6.21	6.45	13.56	7.81	1.89	0.32	41.21

CALM = 0.0

3542 STABILITY CLASS E OCCURRENCES OUT OF TOTAL 8590 VALID TEMPERATURE DIFFERENCE READINGS

3516 VALID WIND DIRECTION - WIND SPEED READINGS OUT OF TOTAL 3542 STABILITY CLASS E OCCURRENCES

ALL COLUMNS AND CALM TOTAL 100 PERCENT OF NET VALID READINGS

*METEOROLOGICAL FACILITY LOCATED .74 MILES SW OF SEQUOYAH NUCLEAR PLANT
TEMPERATURE INSTRUMENTS 33 AND 300 FEET ABOVE GROUND
WIND INSTRUMENTS 300 FEET ABOVE GROUND
"END OF HOUR TEMPERATURE READINGS"

TABLE 2.3.2-55

JOINT PERCENTAGE FREQUENCIES OF WIND DIRECTION AND WIND SPEED
FOR DIFFERENT STABILITY CLASSES*

STABILITY CLASS F
1.5< DELTA T<= 4.0 DEG. C/100M
SEQUOYAH NUCLEAR PLANT METEOROLOGICAL FACILITY
MAY 1, 75 - APRIL 30, 76

WIND DIRECTION	WIND SPEED (MPH) 0.6-1.4	1.5-3.4	3.5-5.4	5.5-7.4	7.5-12.4	12.5-18.4	18.5-24.4	>=24.5	TOTAL
N	0.0	0.19	0.15	0.30	0.49	0.13	0.0	0.0	1.26
NNE	0.01	0.21	0.40	0.50	1.24	0.36	0.01	0.0	2.73
NE	0.0	0.18	0.42	0.41	0.23	0.0	0.0	0.0	1.24
ENE	0.01	0.06	0.09	0.08	0.06	0.06	0.0	0.0	0.36
E	0.01	0.05	0.05	0.02	0.01	0.0	0.0	0.0	0.14
ESE	0.0	0.02	0.05	0.0	0.0	0.0	0.0	0.0	0.07
SE	0.0	0.06	0.02	0.04	0.01	0.02	0.0	0.0	0.15
SSE	0.0	0.13	0.12	0.01	0.14	0.09	0.0	0.0	0.49
S	0.0	0.25	0.19	0.12	0.61	0.19	0.0	0.0	1.36
SSW	0.01	0.20	0.29	0.40	1.20	0.35	0.01	0.0	2.46
SW	0.01	0.22	0.53	0.64	0.79	0.09	0.0	0.0	2.28
WSW	0.01	0.20	0.27	0.42	0.26	0.04	0.0	0.0	1.20
W	0.02	0.07	0.11	0.13	0.20	0.01	0.0	0.0	0.54
WNW	0.01	0.07	0.01	0.02	0.01	0.02	0.0	0.0	0.14
NW	0.0	0.06	0.05	0.05	0.02	0.02	0.0	0.0	0.20
NNW	0.01	0.12	0.09	0.08	0.11	0.02	0.0	0.01	0.44
SUBTOTAL	0.10	2.09	2.84	3.22	5.38	1.40	0.02	0.01	15.06

CALM = 0.0

1294 STABILITY CLASS F OCCURRENCES OUT OF TOTAL 8589 VALID TEMPERATURE DIFFERENCE READINGS
1288 VALID WIND DIRECTION - WIND SPEED READINGS OUT OF TOTAL 1294 STABILITY CLASS F OCCURRENCES
ALL COLUMNS AND CALM TOTAL 100 PERCENT OF NET VALID READINGS

*METEOROLOGICAL FACILITY LOCATED .74 MILES SW OF SEQUOYAH NUCLEAR PLANT
TEMPERATURE INSTRUMENTS 33 AND 300 FEET ABOVE GROUND
WIND INSTRUMENTS 300 FEET ABOVE GROUND
"HOURLY AVERAGE TEMPERATURE"

TABLE 2.3.2-56

JOINT PERCENTAGE FREQUENCIES OF WIND DIRECTION AND WIND SPEED
FOR DIFFERENT STABILITY CLASSES*

STABILITY CLASS F
1.5< DELTA T< = 4.0 DEG. C/100M
SEQUOYAH NUCLEAR PLANT METEOROLOGICAL FACILITY
MAY 1, 75 - APRIL 30, 76

WIND DIRECTION	WIND SPEED (MPH) 0.6-1.4	1.5-3.4	3.5-5.4	5.5-7.4	7.5-12.4	12.5-18.4	18.5-24.4	>=24.5	TOTAL
N	0.02	0.14	0.14	0.28	0.48	0.12	0.0	0.0	1.18
NNE	0.01	0.20	0.42	0.53	1.09	0.39	0.01	0.0	2.65
NE	0.0	0.11	0.43	0.39	0.28	0.0	0.0	0.0	1.21
ENE	0.01	0.11	0.11	0.06	0.07	0.02	0.0	0.0	0.38
E	0.02	0.05	0.04	0.04	0.02	0.0	0.0	0.0	0.17
ESE	0.0	0.02	0.02	0.0	0.0	0.0	0.0	0.0	0.04
SE	0.0	0.08	0.04	0.05	0.01	0.01	0.0	0.0	0.19
SSE	0.0	0.12	0.13	0.02	0.16	0.07	0.0	0.0	0.50
S	0.01	0.29	0.20	0.13	0.63	0.21	0.01	0.0	1.48
SSW	0.01	0.23	0.26	0.41	1.13	0.29	0.02	0.0	2.35
SW	0.01	0.21	0.52	0.54	0.74	0.11	0.01	0.0	2.14
WSW	0.0	0.19	0.30	0.30	0.26	0.04	0.0	0.0	1.09
W	0.02	0.08	0.09	0.12	0.18	0.02	0.0	0.0	0.51
WNW	0.01	0.09	0.04	0.04	0.02	0.01	0.0	0.0	0.21
NW	0.0	0.07	0.05	0.02	0.05	0.04	0.0	0.0	0.23
NNW	0.02	0.12	0.11	0.05	0.12	0.04	0.0	0.01	0.47
SUBTOTAL	0.14	2.11	2.90	2.98	5.24	1.37	0.05	0.01	14.80

CALM = 0.0

1270 STABILITY CLASS F OCCURRENCES OUT OF TOTAL 8590 VALID TEMPERATURE DIFFERENCE READINGS

1262 VALID WIND DIRECTION - WIND SPEED READINGS OUT OF TOTAL 1270 STABILITY CLASS F OCCURRENCES

ALL COLUMNS AND CALM TOTAL 100 PERCENT OF NET VALID READINGS

*METEOROLOGICAL FACILITY LOCATED .74 MILES SW OF SEQUOYAH NUCLEAR PLANT
TEMPERATURE INSTRUMENTS 33 AND 300 FEET ABOVE GROUND
WIND INSTRUMENTS 300 FEET ABOVE GROUND
"END OF HOUR TEMPERATURE READINGS"

TABLE 2.3.2-57

JOINT PERCENTAGE FREQUENCIES OF WIND DIRECTION AND WIND SPEED
FOR DIFFERENT STABILITY CLASSES*

STABILITY CLASS G
DELTA T > 4.0 DEG. C/100M
SEQUOYAH NUCLEAR PLANT METEOROLOGICAL FACILITY
MAY 1, 75 - APRIL 30, 76

WIND DIRECTION	WIND SPEED (MPH) 0.6-1.4	1.5-3.4	3.5-5.4	5.5-7.4	7.5-12.4	12.5-18.4	18.5-24.4	>=24.5	TOTAL
N	0.02	0.04	0.06	0.15	0.28	0.01	0.0	0.0	0.56
NNE	0.0	0.06	0.11	0.25	0.29	0.14	0.0	0.0	0.85
NE	0.01	0.07	0.05	0.05	0.01	0.0	0.0	0.0	0.19
ENE	0.0	0.06	0.02	0.01	0.01	0.0	0.0	0.0	0.10
E	0.0	0.04	0.01	0.01	0.0	0.0	0.0	0.0	0.06
ESE	0.01	0.07	0.0	0.0	0.0	0.0	0.0	0.0	0.08
SE	0.01	0.09	0.02	0.02	0.0	0.01	0.0	0.0	0.15
SSE	0.01	0.02	0.02	0.08	0.0	0.0	0.0	0.0	0.13
S	0.01	0.16	0.21	0.13	0.33	0.01	0.01	0.0	0.86
SSW	0.01	0.22	0.25	0.32	0.73	0.21	0.0	0.0	1.74
SW	0.0	0.11	0.19	0.21	0.45	0.07	0.0	0.0	1.03
WSW	0.0	0.11	0.08	0.06	0.02	0.0	0.0	0.0	0.27
W	0.01	0.08	0.06	0.01	0.05	0.0	0.0	0.0	0.21
WNW	0.01	0.07	0.06	0.02	0.0	0.0	0.01	0.0	0.17
NW	0.0	0.04	0.01	0.01	0.01	0.0	0.0	0.0	0.07
NNW	0.02	0.09	0.04	0.05	0.04	0.0	0.0	0.0	0.24
SUBTOTAL	0.12	1.33	1.19	1.38	2.22	0.45	0.02	0.0	6.71

CALM = 0.0

581 STABILITY CLASS G OCCURRENCES OUT OF TOTAL 8589 VALID TEMPERATURE DIFFERENCE READINGS

574 VALID WIND DIRECTION - WIND SPEED READINGS OUT OF TOTAL 581 STABILITY CLASS G OCCURRENCES

ALL COLUMNS AND CALM TOTAL 100 PERCENT OF NET VALID READINGS

*METEOROLOGICAL FACILITY LOCATED .74 MILES SW OF SEQUOYAH NUCLEAR PLANT
TEMPERATURE INSTRUMENTS 33 AND 300 FEET ABOVE GROUND
WIND INSTRUMENTS 300 FEET ABOVE GROUND
"HOURLY AVERAGE TEMPERATURE"

TABLE 2.3.2-58

JOINT PERCENTAGE FREQUENCIES OF WIND DIRECTION AND WIND SPEED
FOR DIFFERENT STABILITY CLASSES*

STABILITY CLASS G
DELTA T > 4.0 DEG. C/100M
SEQUOYAH NUCLEAR PLANT METEOROLOGICAL FACILITY
MAY 1, 75 - APRIL 30, 76

WIND	WIND SPEED (MPH)								
DIRECTION	0.6-1.4	1.5-3.4	3.5-5.4	5.5-7.4	7.5-12.4	12.5-18.4	18.5-24.4	>=24.5	TOTAL
N	0.01	0.04	0.07	0.13	0.30	0.02	0.0	0.0	0.57
NNE	0.0	0.07	0.09	0.27	0.32	0.12	0.0	0.0	0.87
NE	0.01	0.09	0.05	0.05	0.02	0.0	0.0	0.0	0.22
ENE	0.0	0.04	0.02	0.05	0.01	0.0	0.0	0.0	0.12
E	0.0	0.04	0.01	0.01	0.0	0.0	0.0	0.0	0.06
ESE	0.01	0.07	0.02	0.0	0.0	0.0	0.0	0.0	0.10
SE	0.01	0.07	0.02	0.02	0.0	0.01	0.0	0.0	0.13
SSE	0.01	0.02	0.05	0.07	0.0	0.01	0.0	0.0	0.16
S	0.01	0.14	0.22	0.12	0.36	0.01	0.0	0.0	0.86
SSW	0.01	0.19	0.26	0.30	0.74	0.22	0.0	0.0	1.72
SW	0.0	0.12	0.20	0.23	0.47	0.05	0.0	0.0	1.07
WSW	0.0	0.12	0.07	0.07	0.06	0.0	0.0	0.0	0.32
W	0.02	0.07	0.05	0.05	0.05	0.0	0.0	0.0	0.24
WNW	0.01	0.07	0.06	0.02	0.0	0.0	0.01	0.0	0.17
NW	0.0	0.02	0.01	0.04	0.0	0.0	0.0	0.0	0.07
NNW	0.01	0.08	0.04	0.07	0.04	0.0	0.0	0.0	0.24
SUBTOTAL	0.11	1.25	1.24	1.50	2.37	0.44	0.01	0.0	6.92

CALM = 0.0

599 STABILITY CLASS G OCCURRENCES OUT OF TOTAL 8590 VALID TEMPERATURE DIFFERENCE READINGS

592 VALID WIND DIRECTION - WIND SPEED READINGS OUT OF TOTAL 599 STABILITY CLASS G OCCURRENCES

ALL COLUMNS AND CALM TOTAL 100 PERCENT OF NET VALID READINGS

*METEOROLOGICAL FACILITY LOCATED .74 MILES SW OF SEQUOYAH NUCLEAR PLANT
TEMPERATURE INSTRUMENTS 33 AND 300 FEET ABOVE GROUND
WIND INSTRUMENTS 300 FEET ABOVE GROUND
"END OF HOUR TEMPERATURE READINGS"

TABLE 2.3.4-1

DISTANCES FROM RELEASE ZONES OR POINTS TO EXCLUSION AREA BOUNDARY

Sequoyah Nuclear Plant

Sector	Distance From Release Zone 1[a] (Meters)	Distance From Release Zone 2[b] (Meters)	Distance From Release Zone 3[c] (Meters)
N	945	899	899
NNE	732	732	732
NE	701	863	701
ENE	556	600	556
E	564	604	564
ESE	610	692	610
SE	640	811	640
SSE	701	899	701
S	869	1049	869
SSW	983	1125	975
SW	1280	1372	1256
WSW	914	936	823
W	671	823	524
WNW	655	619	509
NW	663	637	524
NNW	732	710	771

a. Release Zone 1 - Auxiliary building vent exhaust and shield building vent exhaust.

b. Release Zone 2 - Radioactive chemical hood exhaust.

c. Release Zone 3 - Condenser air ejector exhaust.

TABLE 2.3.4-2

ATMOSPHERIC DISPERSION FACTORS FREQUENCY DISTRIBUTION

CALCULATED 1-HOUR-AVERAGE ATMOSPHERIC DISPERSION FACTORS
AT EXCLUSION AREA BOUNDARY DUE TO GROUND-LEVEL RELEASES FROM RELEASE ZONE 1*

SEQUOYAH NUCLEAR PLANT

(BASED ON DATA COLLECTED AT THE METEOROLOGICAL STATION FROM JAN 1, 1972 THROUGH DEC 31, 1975)

ATMOSPHERIC DISPERSION FACTORS (SEC/M3)	FREQUENCY (NO. OF OBSERVATIONS)	PERCENT	CUMULATIVE PERCENT
0.900E-02 - 0.999E-02	1	0.00	0.00
0.800E-02 - 0.899E-02	2	0.01	0.01
0.700E-02 - 0.799E-02	2	0.01	0.02
0.600E-02 - 0.699E-02	8	0.03	0.04
0.500E-02 - 0.599E-02	3	0.01	0.05
0.400E-02 - 0.499E-02	30	0.09	0.14
0.300E-02 - 0.399E-02	39	0.12	0.27
0.200E-02 - 0.299E-02	120	0.38	0.64
0.100E-02 - 0.199E-02	906	2.84	3.48
0.900E-03 - 0.999E-03	324	1.02	4.50
0.800E-03 - 0.899E-03	390	1.22	5.72
0.700E-03 - 0.799E-03	545	1.71	7.43
0.600E-03 - 0.699E-03	834	2.62	10.05
0.500E-03 - 0.599E-03	1198	3.76	13.80
0.400E-03 - 0.499E-03	1867	5.85	19.66
0.300E-03 - 0.399E-03	2782	8.72	28.38
0.200E-03 - 0.299E-03	3966	12.44	40.82
0.100E-03 - 0.199E-03	7864	24.66	65.48
0.900E-04 - 0.999E-04	1272	3.99	69.47
0.800E-04 - 0.899E-04	1236	3.88	73.34
0.700E-04 - 0.799E-04	1471	4.61	77.96
0.600E-04 - 0.699E-04	1415	4.44	82.40
0.500E-04 - 0.599E-04	1234	3.87	86.26
0.400E-04 - 0.499E-04	1050	3.29	89.56
0.300E-04 - 0.399E-04	750	2.35	91.91
0.200E-04 - 0.299E-04	661	2.07	93.98
0.100E-04 - 0.199E-04	673	2.11	96.09
0.900E-05 - 0.999E-05	52	0.16	96.26
0.800E-05 - 0.899E-05	61	0.19	96.45
0.700E-05 - 0.799E-05	72	0.23	96.67
0.600E-05 - 0.699E-05	60	0.19	96.86
0.500E-05 - 0.599E-05	69	0.22	97.08
0.400E-05 - 0.499E-05	106	0.33	97.41
0.300E-05 - 0.399E-05	122	0.38	97.79
0.200E-05 - 0.299E-05	187	0.59	98.38
0.100E-05 - 0.199E-05	239	0.75	99.13
<= 0.999E-06	278	0.87	100.00
TOTALS	31889	100.00	

PERCENT OF THE POSSIBLE 35064 HOURLY OBSERVATIONS WHICH WERE VALID = 90.95
5TH PERCENTILE= 0.859E-03 SEC/M3, 50TH PERCENTILE= 0.163E-03 SEC/M3, AVERAGE= 0.269E-03 SEC/M3
TEMPERATURE INSTRUMENTS LOCATED 46 AND 9 METERS ABOVE GROUND
WIND INSTRUMENTS LOCATED 10 METERS ABOVE GROUND
*Release Zone 1 - Auxiliary building vent exhaust and shield building vent.

TABLE 2.3.4-3

ATMOSPHERIC DISPERSION FACTORS FREQUENCY DISTRIBUTION

CALCULATED 1-HOUR-AVERAGE ATMOSPHERIC DISPERSION FACTORS
AT EXCLUSION AREA BOUNDARY DUE TO GROUND-LEVEL RELEASES FROM RELEASE ZONE 2*

SEQUOYAH NUCLEAR PLANT

(BASED ON DATA COLLECTED AT THE METEOROLOGICAL STATION FROM JAN 1, 1972 THROUGH DEC 31, 1975)

ATMOSPHERIC DISPERSION FACTORS (SEC/M3)	FREQUENCY (NO. OF OBSERVATIONS)	PERCENT	CUMULATIVE PERCENT
0.800E-02 - 0.899E-02	1	0.00	0.00
0.700E-02 - 0.799E-02	2	0.01	0.01
0.600E-02 - 0.699E-02	7	0.02	0.03
0.500E-02 - 0.599E-02	5	0.02	0.05
0.400E-02 - 0.499E-02	18	0.06	0.10
0.300E-02 - 0.399E-02	26	0.08	0.19
0.200E-02 - 0.299E-02	126	0.40	0.58
0.100E-02 - 0.199E-02	766	2.40	2.98
0.900E-03 - 0.999E-03	245	0.77	3.75
0.800E-03 - 0.899E-03	373	1.17	4.92
0.700E-03 - 0.799E-03	470	1.47	6.39
0.600E-03 - 0.699E-03	710	2.23	8.62
0.500E-03 - 0.599E-03	939	2.94	11.57
0.400E-03 - 0.499E-03	1641	5.15	16.71
0.300E-03 - 0.399E-03	2643	8.23	24.94
0.200E-03 - 0.299E-03	3878	12.16	37.10
0.100E-03 - 0.199E-03	7483	23.47	60.56
0.900E-04 - 0.999E-04	1295	4.06	64.62
0.800E-04 - 0.899E-04	1336	4.19	68.81
0.700E-04 - 0.799E-04	1490	4.67	73.49
0.600E-04 - 0.699E-04	1547	4.85	78.34
0.500E-04 - 0.599E-04	1565	4.91	83.24
0.400E-04 - 0.499E-04	1360	4.26	87.51
0.300E-04 - 0.399E-04	1010	3.17	90.68
0.200E-04 - 0.299E-04	817	2.56	93.24
0.100E-04 - 0.199E-04	778	2.44	95.68
0.900E-05 - 0.999E-05	62	0.19	95.87
0.800E-05 - 0.899E-05	76	0.24	96.11
0.700E-05 - 0.799E-05	67	0.21	96.32
0.600E-05 - 0.699E-05	74	0.23	96.55
0.500E-05 - 0.599E-05	75	0.24	96.79
0.400E-05 - 0.499E-05	70	0.22	97.01
0.300E-05 - 0.399E-05	129	0.40	97.41
0.200E-05 - 0.299E-05	184	0.58	97.99
0.100E-05 - 0.199E-05	219	0.69	98.68
<= 0.999E-06	422	1.32	100.00
TOTALS	31889	100.00	

PERCENT OF THE POSSIBLE 35064 HOURLY OBSERVATIONS WHICH WERE VALID = 90.95
5TH PERCENTILE= 0.795E-03 SEC/M3, 50TH PERCENTILE= 0.145E-03 SEC/M3, AVERAGE= 0.243E-03 SEC/M3
TEMPERATURE INSTRUMENTS LOCATED 46 AND 9 METERS ABOVE GROUND
WIND INSTRUMENTS LOCATED 10 METERS ABOVE GROUND
*Release Zone 2 - Radioactive chemical hood exhaust.

TABLE 2.3.4-4

ATMOSPHERIC DISPERSION FACTORS FREQUENCY DISTRIBUTION

CALCULATED 1-HOUR-AVERAGE ATMOSPHERIC DISPERSION FACTORS
AT EXCLUSION AREA BOUNDARY DUE TO GROUND-LEVEL RELEASES FROM RELEASE ZONE 3*

SEQUOYAH NUCLEAR PLANT

(BASED ON DATA COLLECTED AT THE METEOROLOGICAL STATION FROM JAN 1, 1972 THROUGH DEC 31, 1975)

ATMOSPHERIC DISPERSION FACTORS (SEC/M3)	FREQUENCY (NO. OF OBSERVATIONS)	PERCENT	CUMULATIVE PERCENT
0.100E-01 - 0.199E-01	1	0.00	0.00
0.900E-02 - 0.999E-02	1	0.00	0.01
0.800E-02 - 0.899E-02	2	0.01	0.01
0.700E-02 - 0.799E-02	1	0.00	0.02
0.600E-02 - 0.699E-02	5	0.02	0.03
0.500E-02 - 0.599E-02	19	0.06	0.09
0.400E-02 - 0.499E-02	26	0.08	0.17
0.300E-02 - 0.399E-02	63	0.20	0.37
0.200E-02 - 0.299E-02	176	0.55	0.92
0.100E-02 - 0.199E-02	972	3.05	3.97
0.900E-03 - 0.999E-03	294	0.92	4.89
0.800E-03 - 0.899E-03	421	1.32	6.21
0.700E-03 - 0.799E-03	524	1.64	7.86
0.600E-03 - 0.699E-03	849	2.66	10.52
0.500E-03 - 0.599E-03	1194	3.74	14.26
0.400E-03 - 0.499E-03	1819	5.70	19.97
0.300E-03 - 0.399E-03	2806	8.80	28.77
0.200E-03 - 0.299E-03	3981	12.48	41.25
0.100E-03 - 0.199E-03	7836	24.57	65.82
0.900E-04 - 0.999E-04	1253	3.93	69.75
0.800E-04 - 0.899E-04	1221	3.83	73.58
0.700E-04 - 0.799E-04	1449	4.54	78.12
0.600E-04 - 0.699E-04	1415	4.44	82.56
0.500E-04 - 0.599E-04	1222	3.83	86.39
0.400E-04 - 0.499E-04	1051	3.30	89.69
0.300E-04 - 0.399E-04	705	2.21	91.90
0.200E-04 - 0.299E-04	665	2.09	93.99
0.100E-04 - 0.199E-04	683	2.14	96.13
0.900E-05 - 0.999E-05	54	0.17	96.30
0.800E-05 - 0.899E-05	62	0.19	96.49
0.700E-05 - 0.799E-05	58	0.18	96.67
0.600E-05 - 0.699E-05	69	0.22	96.89
0.500E-05 - 0.599E-05	58	0.18	96.07
0.400E-05 - 0.499E-05	102	0.32	97.39
0.300E-05 - 0.399E-05	131	0.41	97.80
0.200E-05 - 0.299E-05	196	0.61	98.42
0.100E-05 - 0.199E-05	238	0.75	99.16
<= 0.999E-06	267	0.84	100.00
TOTALS	31889	100.00	

PERCENT OF THE POSSIBLE 35064 HOURLY OBSERVATIONS WHICH WERE VALID = 90.95
5TH PERCENTILE= 0.892E-03 SEC/M3, 50TH PERCENTILE= 0.164E-03 SEC/M3, AVERAGE= 0.279E-03 SEC/M3
TEMPERATURE INSTRUMENTS LOCATED 46 AND 9 METERS ABOVE GROUND
WIND INSTRUMENTS LOCATED 10 METERS ABOVE GROUND
*Release Zone 3 - Condenser air ejector exhaust.

TABLE 2.3.4-5

ATMOSPHERIC DISPERSION FACTORS FREQUENCY DISTRIBUTION

CALCULATED 1-HOUR-AVERAGE ATMOSPHERIC DISPERSION FACTORS
AT 556 METERS (MINIMUM EXCLUSIVE AREA BOUNDARY DISTANCE) DUE TO GROUND-LEVEL RELEASES FROM
RELEASE ZONE 1*

SEQUOYAH NUCLEAR PLANT

(BASED ON DATA COLLECTED AT THE METEOROLOGICAL STATION FROM JAN 1, 1972 THROUGH DEC 31, 1975)

ATMOSPHERIC DISPERSION FACTORS (SEC/M3)	FREQUENCY (NO. OF OBSERVATIONS)	PERCENT	CUMULATIVE PERCENT
0.900E-02 - 0.999E-02	18	0.06	0.06
0.400E-02 - 0.499E-02	82	0.26	0.31
0.300E_02 - 0.399E-02	103	0.32	0.64
0.200E-02 - 0.299E-02	346	1.09	1.72
0.100E-02 - 0.199E-02	1963	6.16	7.88
0.900E-03 - 0.999E-03	649	2.04	9.91
0.800E-03 - 0.899E-03	700	2.20	12.11
0.700E-03 - 0.799E-03	810	2.54	14.65
0.600E-03 - 0.699E-03	1319	4.14	18.78
0.500E-03 - 0.599E-03	1514	4.75	23.53
0.400E-03 - 0.499E-03	2327	7.30	30.83
0.300E-03 - 0.399E-03	3063	9.61	40.43
0.200E-03 - 0.299E-03	4622	14.49	54.93
0.100E-03 - 0.199E-03	8358	26.21	81.14
0.900E-04 - 0.999E-04	1050	3.29	84.43
0.800E-04 - 0.899E-04	835	2.62	87.05
0.700E-04 - 0.799E-04	748	2.35	89.39
0.600E-04 - 0.699E-04	643	2.02	91.41
0.500E-04 - 0.599E-04	483	1.51	92.93
0.400E-04 - 0.499E-04	359	1.13	94.05
0.300E-04 - 0.399E-04	381	1.19	95.25
0.200E-04 - 0.299E-04	357	1.12	96.37
0.100E-04 - 0.199E-04	397	1.24	97.61
0.900E-05 - 0.999E-05	55	0.17	97.78
0.800E-05 - 0.899E-05	87	0.27	98.06
0.700E-05 - 0.799E-05	91	0.29	98.34
0.600E-05 - 0.699E-05	130	0.41	98.75
0.500E-05 - 0.599E-05	166	0.52	99.27
0.400E-05 - 0.499E-05	132	0.41	99.68
0.300E-05 - 0.399E-05	84	0.26	99.95
0.200E-05 - 0.299E-05	16	0.05	100.00
0.100E-05 - 0.199E-05	1	0.00	100.00
<= 0.999E-06	0	0.00	100.00
TOTALS	31889	100.00	

PERCENT OF THE POSSIBLE 35064 HOURLY OBSERVATIONS WHICH WERE VALID = 90.95
5TH PERCENTILE= 0.147E-02 SEC/M3, 50TH PERCENTILE= 0.234E-03 SEC/M3, AVERAGE= 0.396E-03 SEC/M3
TEMPERATURE INSTRUMENTS LOCATED 46 AND 9 METERS ABOVE GROUND
WIND INSTRUMENTS LOCATED 10 METERS ABOVE GROUND
*Release Zone 1 - Auxiliary building vent exhaust and shield building vent.

TABLE 2.3.4-6

ATMOSPHERIC DISPERSION FACTORS FREQUENCY DISTRIBUTION

CALCULATED 1-HOUR-AVERAGE ATMOSPHERIC DISPERSION FACTORS
AT 600 METERS (MINIMUM EXCLUSION AREA BOUNDARY DISTANCE) DUE TO GROUND-LEVEL RELEASES FROM
RELEASE ZONE 2*

SEQUOYAH NUCLEAR PLANT

(BASED ON DATA COLLECTED AT THE METEOROLOGICAL STATION FROM JAN 1, 1972 THROUGH DEC 31, 1975)

ATMOSPHERIC DISPERSION FACTORS (SEC/M3)	FREQUENCY (NO. OF OBSERVATIONS)	PERCENT	CUMULATIVE PERCENT
0.800E-02 - 0.899E-02	18	0.06	0.06
0.400E-02 - 0.499E-02	59	0.19	0.24
0.300E-02 - 0.399E-02	50	0.16	0.40
0.200E-02 - 0.299E-02	261	0.82	1.22
0.100E-02 - 0.199E-02	1715	5.38	6.59
0.900E-03 - 0.999E-03	566	1.77	8.37
0.800E-03 - 0.899E-03	621	1.95	10.32
0.700E-03 - 0.799E-03	842	2.64	12.96
0.600E-03 - 0.699E-03	1143	3.58	16.54
0.500E-03 - 0.599E-03	1574	4.94	21.48
0.400E-03 - 0.499E-03	2424	7.60	29.08
0.300E-03 - 0.399E-03	2915	9.14	38.22
0.200E-03 - 0.299E-03	4422	13.87	52.09
0.100E-03 - 0.199E-03	8359	26.21	78.30
0.900E-04 - 0.999E-04	1067	3.35	81.65
0.800E-04 - 0.899E-04	1054	3.31	84.95
0.700E-04 - 0.799E-04	944	2.96	87.91
0.600E-04 - 0.699E-04	707	2.22	90.13
0.500E-04 - 0.599E-04	655	2.05	92.18
0.400E-04 - 0.499E-04	417	1.31	93.49
0.300E-04 - 0.399E-04	391	1.23	94.72
0.200E-04 - 0.299E-04	427	1.34	96.05
0.100E-04 - 0.199E-04	381	1.19	97.25
0.900E-05 - 0.999E-05	64	0.20	97.45
0.800E-05 - 0.899E-05	68	0.21	97.66
0.700E-05 - 0.799E-05	87	0.27	97.94
0.600E-05 - 0.699E-05	102	0.32	98.26
0.500E-05 - 0.599E-05	157	0.49	98.75
0.400E-05 - 0.499E-05	202	0.63	99.38
0.300E-05 - 0.399E-05	137	0.43	99.81
0.200E-05 - 0.299E-05	57	0.18	99.99
0.100E-05 - 0.199E-05	3	0.01	100.00
<= 0.999E-06	0	0.0	100.00
TOTALS	31889	100.00	

PERCENT OF THE POSSIBLE 35064 HOURLY OBSERVATIONS WHICH WERE VALID = 90.95
5TH PERCENTILE= 0.130E-02 SEC/M3, 50TH PERCENTILE= 0.215E-03 SEC/M3, AVERAGE= 0.365E-03 SEC/M3
TEMPERATURE INSTRUMENTS LOCATED 46 AND 9 METERS ABOVE GROUND
WIND INSTRUMENTS LOCATED 10 METERS ABOVE GROUND
*Release Zone 2 - Radioactive chemical hood exhaust.

TABLE 2.3.4-7

ATMOSPHERIC DISPERSION FACTORS FREQUENCY DISTRIBUTION

CALCULATED 1-HOUR-AVERAGE ATMOSPHERIC DISPERSION FACTORS
AT 509 METERS (MINIMUM EXCLUSION AREA BOUNDARY DISTANCE) DUE TO GROUND-LEVEL RELEASES FROM
RELEASE ZONE 3*

SEQUOYAH NUCLEAR PLANT

(BASED ON DATA COLLECTED AT THE METEOROLOGICAL STATION FROM JAN 1, 1972 THROUGH DEC 31, 1975)

ATMOSPHERIC DISPERSION FACTORS (SEC/M3)	FREQUENCY (NO. OF OBSERVATIONS)	PERCENT	CUMULATIVE PERCENT
80.100E-01 - 0.199E-01	18	0.06	0.06
0.500E-02 - 0.599E-02	59	0.19	0.24
0.400E-02 - 0.499E-02	50	0.16	0.40
0.300E-02 - 0.399E-02	160	0.50	0.90
0.200E-02 - 0.299E-02	429	1.35	2.25
0.100E-02 - 0.199E-02	2329	7.30	9.55
0.900E-03 - 0.999E-03	421	1.32	10.87
0.800E-03 - 0.899E-03	830	2.60	13.47
0.700E-03 - 0.799E-03	816	2.56	16.03
0.600E-03 - 0.699E-03	1324	4.15	20.18
0.500E-03 - 0.599E-03	1914	6.00	26.18
0.400E-03 - 0.499E-03	2466	7.73	33.92
0.300E-03 - 0.399E-03	3004	9.42	43.34
0.200E-03 - 0.299E-03	5067	15.89	59.23
0.100E-03 - 0.199E-03	7962	24.97	84.20
0.900E-04 - 0.999E-04	821	2.57	86.77
0.800E-04 - 0.899E-04	709	2.22	88.99
0.700E-04 - 0.799E-04	596	1.87	90.86
0.600E-04 - 0.699E-04	533	1.67	92.53
0.500E-04 - 0.599E-04	341	1.07	93.60
0.400E-04 - 0.499E-04	351	1.10	94.70
0.300E-04 - 0.399E-04	339	1.06	95.77
0.200E-04 - 0.299E-04	283	0.89	96.65
0.100E-04 - 0.199E-04	437	1.37	98.02
0.900E-05 - 0.999E-05	74	0.23	98.26
0.800E-05 - 0.899E-05	102	0.32	98.58
0.700E-05 - 0.799E-05	123	0.39	98.96
0.600E-05 - 0.699E-05	126	0.40	99.36
0.500E-05 - 0.599E-05	101	0.32	99.67
0.400E-05 - 0.499E-05	73	0.23	99.90
0.300E-05 - 0.399E-05	28	0.09	99.99
0.200E-05 - 0.299E-05	2	0.01	100.00
0.100E-05 - 0.199E-05	1	0.00	100.00
<= 0.999E-06	0	0.0	100.00
TOTALS	31889	100.00	

PERCENT OF THE POSSIBLE 35064 HOURLY OBSERVATIONS WHICH WERE VALID = 90.95
5TH PERCENTILE= 0.162E-02 SEC/M3, 50TH PERCENTILE= 0.258E-03 SEC/M3, AVERAGE= 0.435E-03 SEC/M3
TEMPERATURE INSTRUMENTS LOCATED 46 AND 9 METERS ABOVE GROUND
WIND INSTRUMENTS LOCATED 10 METERS ABOVE GROUND
*Release Zone 3 - Condenser air ejector exhaust.

TABLE 2.3.4-8

ATMOSPHERIC DISPERSION FACTORS FREQUENCY DISTRIBUTION

CALCULATED 1-HOUR-AVERAGE ATMOSPHERIC DISPERSION FACTORS
AT OUTER BOUNDARY OF LOW POPULATION ZONE DUE TO GROUND-LEVEL RELEASES FROM A LOCATION REPRESENTATIVE OF
RELEASE ZONE 1, RELEASE ZONE 2, AND RELEASE ZONE 3

SEQUOYAH NUCLEAR PLANT

(BASED ON DATA COLLECTED AT THE METEOROLOGICAL STATION FROM JAN 1, 1972 THROUGH DEC 31, 1975)

ATMOSPHERIC DISPERSION FACTORS (SEC/M3)	FREQUENCY (NO. OF OBSERVATIONS)	PERCENT	CUMULATIVE PERCENT
0.100E-02 - 0.199E-02	18	0.06	0.06
0.500E-03 - 0.599E-03	20	0.06	0.12
0.400E-03 - 0.499E-03	62	0.19	0.31
0.300E-03 - 0.399E-03	91	0.29	0.60
0.200E-03 - 0.299E-03	342	1.07	1.67
0.100E-03 - 0.199E-03	1734	5.44	7.11
0.900E-04 - 0.999E-04	338	1.06	8.17
0.800E-04 - 0.899E-04	575	1.80	9.97
0.700E-04 - 0.799E-04	602	1.89	11.86
0.600E-04 - 0.699E-04	968	3.04	14.90
0.500E-04 - 0.599E-04	1059	3.32	18.22
0.400E-04 - 0.499E-04	1754	5.50	23.72
0.300E-04 - 0.399E-04	1799	5.64	29.36
0.200E-04 - 0.299E-04	2793	8.76	38.12
0.100E-04 - 0.199E-04	6560	20.57	58.69
0.900E-05 - 0.999E-05	1118	3.51	62.19
0.800E-05 - 0.899E-05	1438	4.51	66.70
0.700E-05 - 0.799E-05	1413	4.43	71.13
0.600E-05 - 0.699E-05	1518	4.76	75.89
0.500E-05 - 0.599E-05	1618	5.07	80.97
0.400E-05 - 0.499E-05	1485	4.66	85.63
0.300E-05 - 0.399E-05	1196	3.75	89.38
0.200E-05 - 0.299E-05	887	2.78	92.16
0.100E-05 - 0.199E-05	654	2.05	94.21
<= 0.999E-06	1847	5.79	100.00
TOTALS	31889	100.00	

PERCENT OF THE POSSIBLE 35064 HOURLY OBSERVATIONS WHICH WERE VALID = 90.95
5TH PERCENTILE= 0.139E-03 SEC/M3, 50TH PERCENTILE= 0.142E-04 SEC/M3, AVERAGE= 0.319E-04 SEC/M3
TEMPERATURE INSTRUMENTS LOCATED 46 AND 9 METERS ABOVE GROUND
WIND INSTRUMENTS LOCATED 10 METERS ABOVE GROUND

TABLE 2.3.4-9

ATMOSPHERIC DISPERSION FACTORS FREQUENCY DISTRIBUTION

CALCULATED 8-HOUR-AVERAGE ATMOSPHERIC DISPERSION FACTORS
AT OUTER BOUNDARY OF LOW POPULATION ZONE DUE TO GROUND-LEVEL RELEASES FROM A LOCATION REPRESENTATIVE OF
RELEASE ZONE 1, RELEASE ZONE 2, AND RELEASE ZONE 3

SEQUOYAH NUCLEAR PLANT

(BASED ON DATA COLLECTED AT THE METEOROLOGICAL STATION FROM JAN 1, 1972 THROUGH DEC 31, 1975)

ATMOSPHERIC DISPERSION FACTORS (SEC/M3)	FREQUENCY (NO. OF OBSERVATIONS)	PERCENT	CUMULATIVE PERCENT
0.300E-03 - 0.399E-03	8	0.03	0.03
0.200E-03 - 0.299E-03	32	0.12	0.15
0.100E-03 - 0.199E-03	203	0.76	0.91
0.900E-04 - 0.999E-04	71	0.27	1.17
0.800E-04 - 0.899E-04	126	0.47	1.65
0.700E-04 - 0.799E-04	182	0.68	2.23
0.600E-04 - 0.699E-04	380	1.42	3.75
0.500E-04 - 0.599E-04	545	2.04	5.79
0.400E-04 - 0.499E-04	881	3.29	9.08
0.300E-04 - 0.399E-04	1723	6.44	15.52
0.200E-04 - 0.299E-04	2944	11.01	26.53
0.100E-04 - 0.199E-04	6078	22.73	49.27
0.900E-05 - 0.999E-05	985	3.68	52.95
0.800E-05 - 0.899E-05	1124	4.20	57.15
0.700E-05 - 0.799E-05	1377	5.15	62.30
0.600E-05 - 0.699E-05	1475	5.52	67.82
0.500E-05 - 0.599E-05	1767	6.61	74.43
0.400E-05 - 0.499E-05	1926	7.20	81.63
0.300E-05 - 0.399E-05	2031	7.60	89.23
0.200E-05 - 0.299E-05	1726	6.45	95.68
0.100E-05 - 0.199E-05	960	3.59	99.27
0.900E-06 - 0.999E-06	39	0.15	99.42
0.800E-06 - 0.899E-06	46	0.17	99.59
0.700E-06 - 0.799E-06	29	0.11	99.70
0.600E-06 - 0.699E-06	29	0.11	99.81
0.500E-06 - 0.599E-06	18	0.07	99.87
0.400E-06 - 0.499E-06	11	0.04	99.91
0.300E-06 - 0.399E-06	11	0.04	99.95
0.200E-06 - 0.299E-06	3	0.01	99.97
0.100E-06 - 0.199E-06	2	0.01	99.97
<= 0.999E-06	7	0.03	100.00
TOTALS	26739	100.00	

PERCENT OF THE POSSIBLE 35057 8-HOUR OBSERVATIONS WHICH WERE VALID = 76.27
5TH PERCENTILE= 0.539E-04 SEC/M3, 50TH PERCENTILE= 0.980E-05 SEC/M3, AVERAGE= 0.169E-04 SEC/M3
TEMPERATURE INSTRUMENTS LOCATED 46 AND 9 METERS ABOVE GROUND
WIND INSTRUMENTS LOCATED 10 METERS ABOVE GROUND

TABLE 2.3.4-10

ATMOSPHERIC DISPERSION FACTORS FREQUENCY DISTRIBUTION

CALCULATED 16-HOUR-AVERAGE ATMOSPHERIC DISPERSION FACTORS
AT OUTER BOUNDARY OF LOW POPULATION ZONE DUE TO GROUND-LEVEL RELEASES FROM A LOCATION REPRESENTATIVE OF
RELEASE ZONE 1, RELEASE ZONE 2, AND RELEASE ZONE 3

SEQUOYAH NUCLEAR PLANT

(BASED ON DATA COLLECTED AT THE METEOROLOGICAL STATION FROM JAN 1, 1972 THROUGH DEC 31, 1975)

ATMOSPHERIC DISPERSION FACTORS (SEC/M3)	FREQUENCY (NO. OF OBSERVATIONS)	PERCENT	CUMULATIVE PERCENT
0.300E-04 - 0.399E-04	26	0.09	0.09
0.200E-04 - 0.299E-04	61	0.22	0.32
0.100E-04 - 0.199E-04	439	1.60	1.92
0.900E-05 - 0.999E-05	151	0.55	2.47
0.800E-05 - 0.899E-05	272	0.99	3.46
0.700E-05 - 0.799E-05	513	1.87	5.33
0.600E-05 - 0.699E-05	842	3.07	8.39
0.500E-05 - 0.599E-05	1313	4.78	13.18
0.400E-05 - 0.499E-05	2167	7.89	21.07
0.300E-05 - 0.399E-05	3694	13.46	34.53
0.200E-05 - 0.299E-05	6680	24.34	58.86
0.100E-05 - 0.199E-05	9097	33.14	92.00
0.900E-06 - 0.999E-06	619	2.26	94.26
0.800E-06 - 0.899E-06	573	2.09	96.35
0.700E-06 - 0.799E-06	388	1.41	97.76
0.600E-06 - 0.699E-06	286	1.04	98.80
0.500E-06 - 0.599E-06	161	0.59	99.39
0.400E-06 - 0.499E-06	99	0.36	99.75
0.300E-06 - 0.399E-06	61	0.22	99.97
0.200E-06 - 0.299E-06	8	0.03	100.00
<= 0.999E-07	0	0.0	100.00
TOTALS	27450	100.00	

PERCENT OF THE POSSIBLE 35049 16-HOUR OBSERVATIONS WHICH WERE VALID = 78.32
5TH PERCENTILE= 0.717E-05 SEC/M3, 50TH PERCENTILE= 0.236E-05 SEC/M3, AVERAGE= 0.299E-05 SEC/M3
TEMPERATURE INSTRUMENTS LOCATED 46 AND 9 METERS ABOVE GROUND
WIND INSTRUMENTS LOCATED 10 METERS ABOVE GROUND

TABLE 2.3.4-11

ATMOSPHERIC DISPERSION FACTORS FREQUENCY DISTRIBUTION
CALCULATED 3-DAY-AVERAGE ATMOSPHERIC DISPERSION FACTORS
AT OUTER BOUNDARY OF LOW POPULATION ZONE DUE TO GROUND-LEVEL RELEASES FROM A LOCATION REPRESENTATIVE OF
RELEASE ZONE 1, RELEASE ZONE 2, AND RELEASE ZONE 3

SEQUOYAH NUCLEAR PLANT

(BASED ON DATA COLLECTED AT THE METEOROLOGICAL STATION FROM JAN 1, 1972 THROUGH DEC 31, 1975)

ATMOSPHERIC DISPERSION FACTORS (SEC/M3)	FREQUENCY (NO. OF OBSERVATIONS)	PERCENT	CUMULATIVE PERCENT
0.100E-04 - 0.199E-04	33	0.13	0.13
0.900E-05 - 0.999E-05	2	0.01	0.14
0.800E-05 - 0.899E-05	65	0.26	0.40
0.700E-05 - 0.799E-05	104	0.42	0.82
0.600E-05 - 0.699E-05	112	0.45	1.27
0.500E-05 - 0.599E-05	366	1.47	2.75
0.400E-05 - 0.499E-05	850	3.42	6.17
0.300E-05 - 0.399E-05	1883	7.59	13.76
0.200E-05 - 0.299E-05	6107	24.61	38.37
0.100E-05 - 0.199E-05	12251	49.36	87.73
0.900E-06 - 0.999E-06	1157	4.66	92.39
0.800E-06 - 0.899E-06	836	3.37	95.76
0.700E-06 - 0.799E-06	512	2.06	97.82
0.600E-06 - 0.699E-06	229	0.92	98.75
0.500E-06 - 0.599E-06	168	0.68	99.42
0.400E-06 - 0.499E-06	124	0.50	99.92
0.300E-06 - 0.399E-06	19	0.08	100.00
<= 0.999E-07	0	0.0	100.00
TOTALS	24818	100.00	

PERCENT OF THE POSSIBLE 34993 3-DAY OBSERVATIONS WHICH WERE VALID = 70.92
5TH PERCENTILE= 0.434E-05 SEC/M3, 50TH PERCENTILE= 0.176E-05 SEC/M3, AVERAGE= 0.201E-05 SEC/M3
TEMPERATURE INSTRUMENTS LOCATED 46 AND 9 METERS ABOVE GROUND
WIND INSTRUMENTS LOCATED 10 METERS ABOVE GROUND

SQN

TABLE 2.3.4-12

ATMOSPHERIC DISPERSION FACTORS FREQUENCY DISTRIBUTION
CALCULATED 26-DAY-AVERAGE ATMOSPHERIC DISPERSION FACTORS
AT OUTER BOUNDARY OF LOW POPULATION ZONE DUE TO GROUND-LEVEL RELEASES FROM A LOCATION REPRESENTATIVE OF
RELEASE ZONE 1, RELEASE ZONE 2, AND RELEASE ZONE 3

SEQUOYAH NUCLEAR PLANT

(BASED ON DATA COLLECTED AT THE METEOROLOGICAL STATION FROM JAN 1, 1972 THROUGH DEC 31, 1975)

ATMOSPHERIC DISPERSION FACTORS (SEC/M3)	FREQUENCY (NO. OF OBSERVATIONS)	PERCENT	CUMULATIVE PERCENT
0.300E-05 - 0.399E-05	354	1.61	1.61
0.200E-05 - 0.299E-05	2554	11.60	13.20
0.100E-05 - 0.199E-05	17288	78.50	91.71
0.900E-06 - 0.999E-06	1390	6.31	98.02
0.800E-06 - 0.899E-06	363	1.65	99.67
0.700E-06 - 0.799E-06	73	0.33	100.00
<= 0.999E-07	0	0.0	100.00
TOTALS	22022	100.00	

PERCENT OF THE POSSIBLE 34441 26-DAY OBERSERVATIONS WHICH WERE VALID = 63.94
5TH PERCENTILE = 0.271E-05 SEC/M3, 50TH PERCENTILE= 0.153E-05 SEC/M3, AVERAGE= 0.148E-05 SEC/M3
TEMPERATURE INSTRUMENTS LOCATED 46 AND 9 METERS ABOVE GROUND
WIND INSTRUMENTS LOCATED 10 METERS ABOVE GROUND

Table 2.3.4-13

Sequoyah Nuclear Plant -

Fifth Percentile Atmospheric Dispersion Factors (χ/Q's) for Comparative Data -

Hourly-Average and End-of-Hour Temperature Differences (ΔT)

(May 1975-April 1976)*

Minimum Exclusion Boundary Distance (556 meters)

Period	Hour-Average ΔT	End-of-Hour ΔT
1-hour	0.978×10^{-3}	0.985×10^{-3}
8-hour	0.392×10^{-3}	0.389×10^{-3}

Low Population Zone (LPZ) Distance (4828 meters)

Period	Hour-Average ΔT	End-of-Hour ΔT
8-hour	0.494×10^{-4}	0.484×10^{-4}
16-hour	0.613×10^{-5}	0.612×10^{-5}
3-day	0.360×10^{-5}	0.351×10^{-5}
26-day	0.267×10^{-5}	0.254×10^{-5}

*Wind direction and wind speed measured at 33 feet above ground. Temperature measured at 33 and 150 feet above ground.

TABLE 2.3.4-14

SEQUOYAH NUCLEAR PLANT

AVERAGE ANNUAL DISPERSION FACTORS,[1] χ/Q, (s/m^3)

Downwind Distances (miles)

Sector	1	2	3	4	5	10	15	20	30	40	50
N	0.2386E-05	0.8903E-06	0.4990E-06	0.3318E-06	0.2423E-06	0.9330E-07	0.5432E-07	0.3733E-07	0.2231E-07	0.1563E-07	0.1193E-07
NNE	0.3358E-05	0.1246E-05	0.6963E-06	0.4621E-06	0.3370E-06	0.1292E-06	0.7507E-07	0.5151E-07	0.3071E-07	0.2149E-07	0.1638E-07
NE	0.3160E-05	0.1169E-05	0.6523E-06	0.4325E-06	0.3152E-06	0.1207E-06	0.7003E-07	0.4803E-07	0.2861E-07	0.2001E-07	0.1625E-07
ENE	0.1324E-05	0.4874E-06	0.2713E-06	0.1796E-06	0.1309E-06	0.4998E-07	0.2899E-07	0.1988E-07	0.1184E-07	0.8283E-08	0.6314E-08
E	0.6960E-06	0.2585E-06	0.1446E-06	0.9600E-07	0.7007E-07	0.2691E-07	0.1565E-07	0.1075E-07	0.6423E-08	0.4499E-08	0.3434E-08
ESE	0.7180E-06	0.2661E-06	0.1486E-06	0.9861E-07	0.7194E-07	0.2760E-07	0.1605E-07	0.1103E-07	0.6585E-08	0.4613E-08	0.3521E-08
SE	0.8539E-06	0.3141E-06	0.1748E-06	0.1158E-06	0.8432E-07	0.3221E-07	0.1869E-07	0.1282E-07	0.7638E-08	0.5343E-08	0.4073E-08
SSE	0.1301E-05	0.4778E-06	0.2656E-06	0.1757E-06	0.1279E-06	0.4883E-07	0.2832E-07	0.1942E-07	0.1157E-07	0.8098E-08	0.6175E-08
S	0.2338E-05	0.8796E-06	0.4945E-06	0.3294E-06	0.2410E-06	0.9313E-07	0.5434E-07	0.3741E-07	0.2241E-07	0.1573E-07	0.1202E-07
SSW	0.5847E-05	0.2192E-05	0.1231E-05	0.8188E-06	0.5983E-06	0.2304E-06	0.1343E-06	0.9237E-07	0.5521E-07	0.3870E-07	0.2955E-07
SW	0.2629E-05	0.9936E-06	0.5602E-06	0.3736E-06	0.2735E-06	0.1057E-06	0.6163E-07	0.4238E-07	0.2534E-07	0.1776E-07	0.1356E-07
WSW	0.1264E-05	0.4918E-06	0.2811E-06	0.1891E-06	0.1393E-06	0.5467E-07	0.3212E-07	0.2220E-07	0.1336E-07	0.9408E-08	0.7207E-08
W	0.1031E-05	0.4016E-06	0.2296E-06	0.1544E-06	0.1137E-06	0.4464E-07	0.2623E-07	0.1814E-07	0.1092E-07	0.7692E-08	0.5894E-08
WNW	0.6277E-06	0.2446E-06	0.1398E-06	0.9406E-07	0.6927E-07	0.2720E-07	0.1599E-07	0.1105E-07	0.6658E-08	0.4690E-08	0.3594E-08
NW	0.7777E-06	0.2973E-06	0.1684E-06	0.1127E-06	0.8273E-07	0.3221E-07	0.1886E-07	0.1301E-07	0.7811E-08	0.5492E-08	0.4203E-08
NNW	0.1316E-05	0.5079E-06	0.2893E-06	0.1942E-06	0.1428E-06	0.5588E-07	0.3278E-07	0.2264E-07	0.1361E-07	0.9581E-08	0.7337E-08

1. Based on data collected at the meteorological station from January 1, 1972 through December 31, 1975.

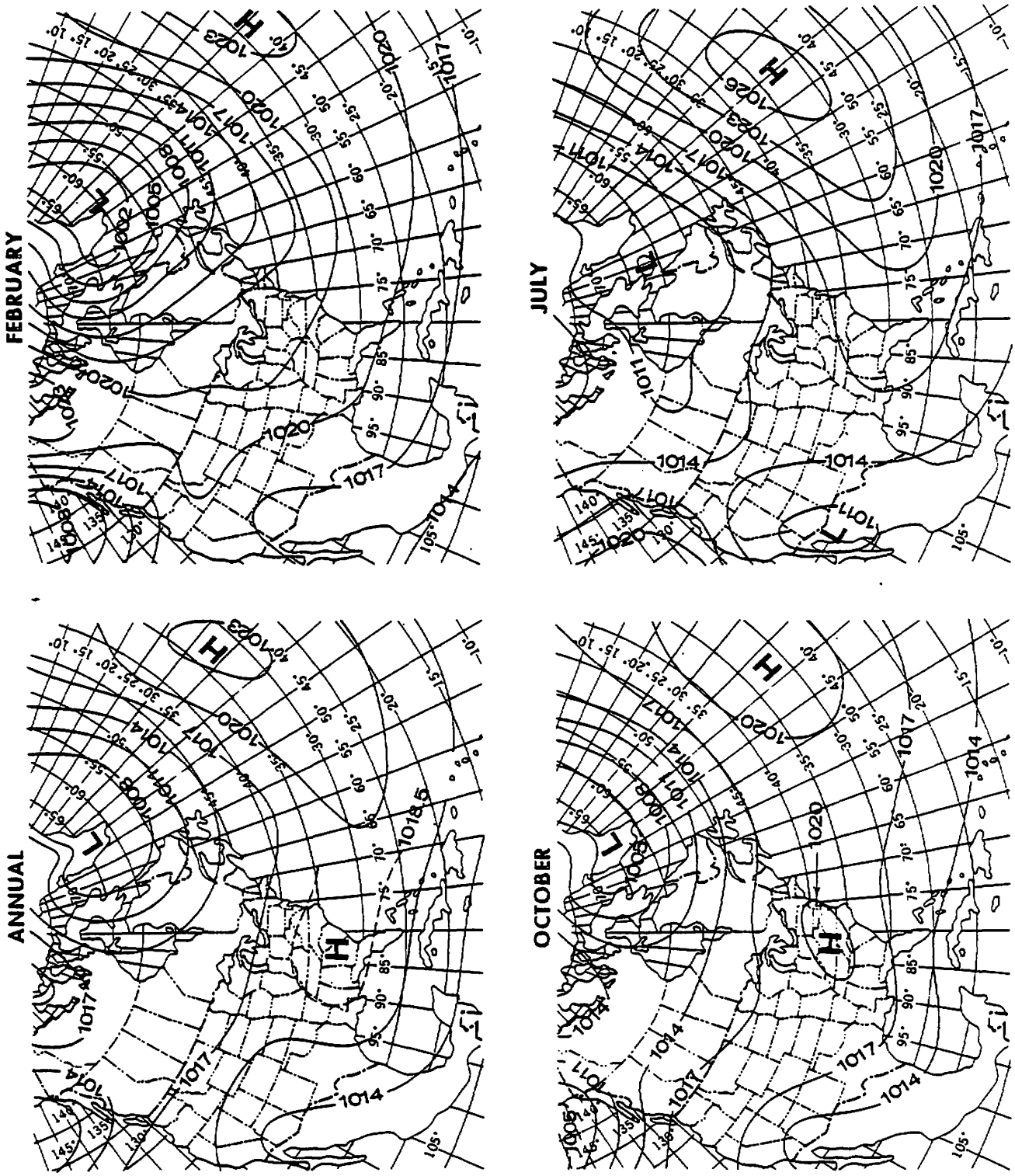

SEQUOYAH NUCLEAR PLANT
FINAL SAFETY ANALYSIS REPORT

Figure 2.3.1-1

Normal Sea Level Pressure Distribution Over North America and the North Atlantic Ocean

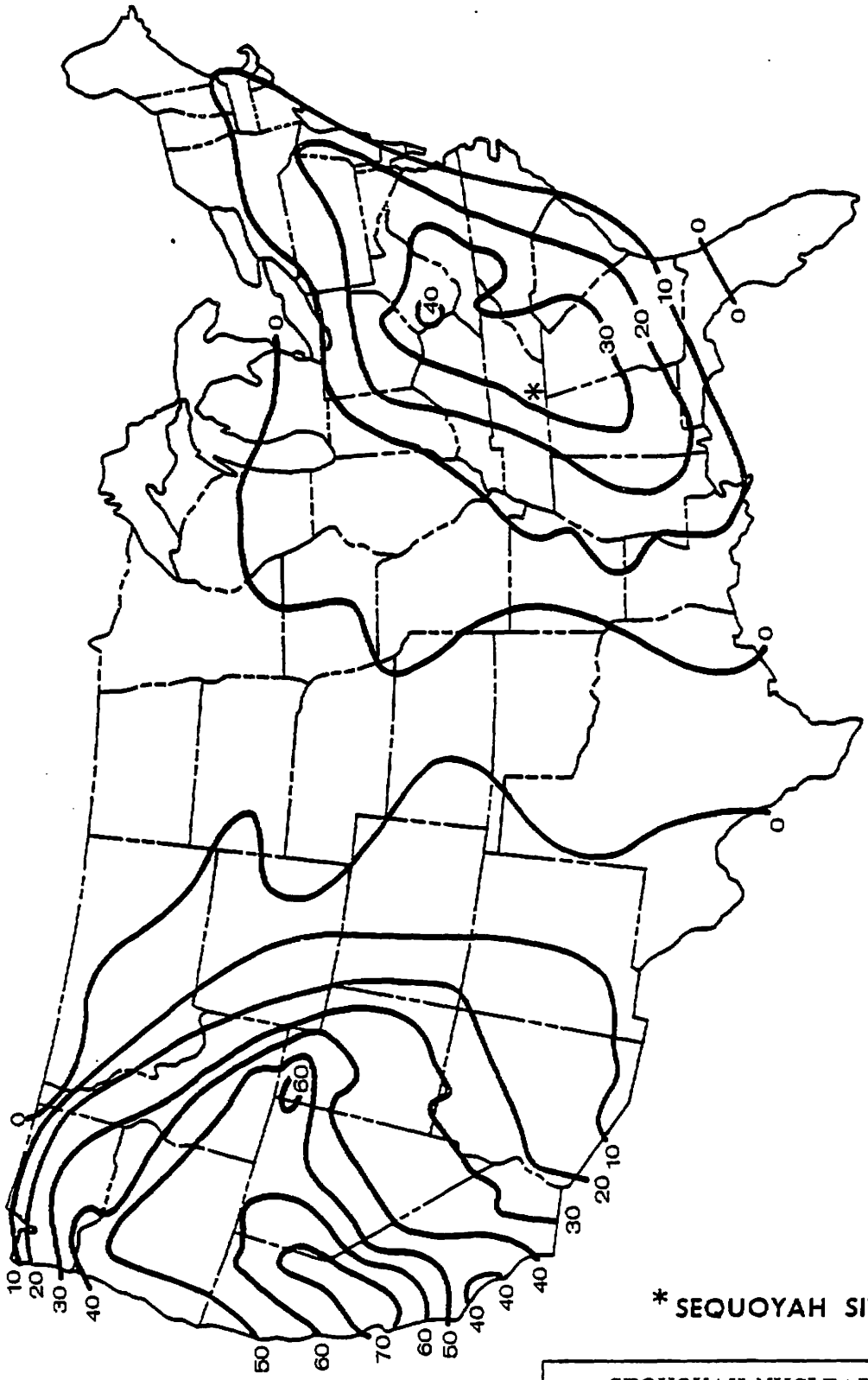

* SEQUOYAH SITE

SEQUOYAH NUCLEAR PLANT
FINAL SAFETY ANALYSIS REPORT

Figure 2.3.1-2

Total Number of Forecast-Days of High Meteorological Potential for Air Pollution in a 5 Year Period

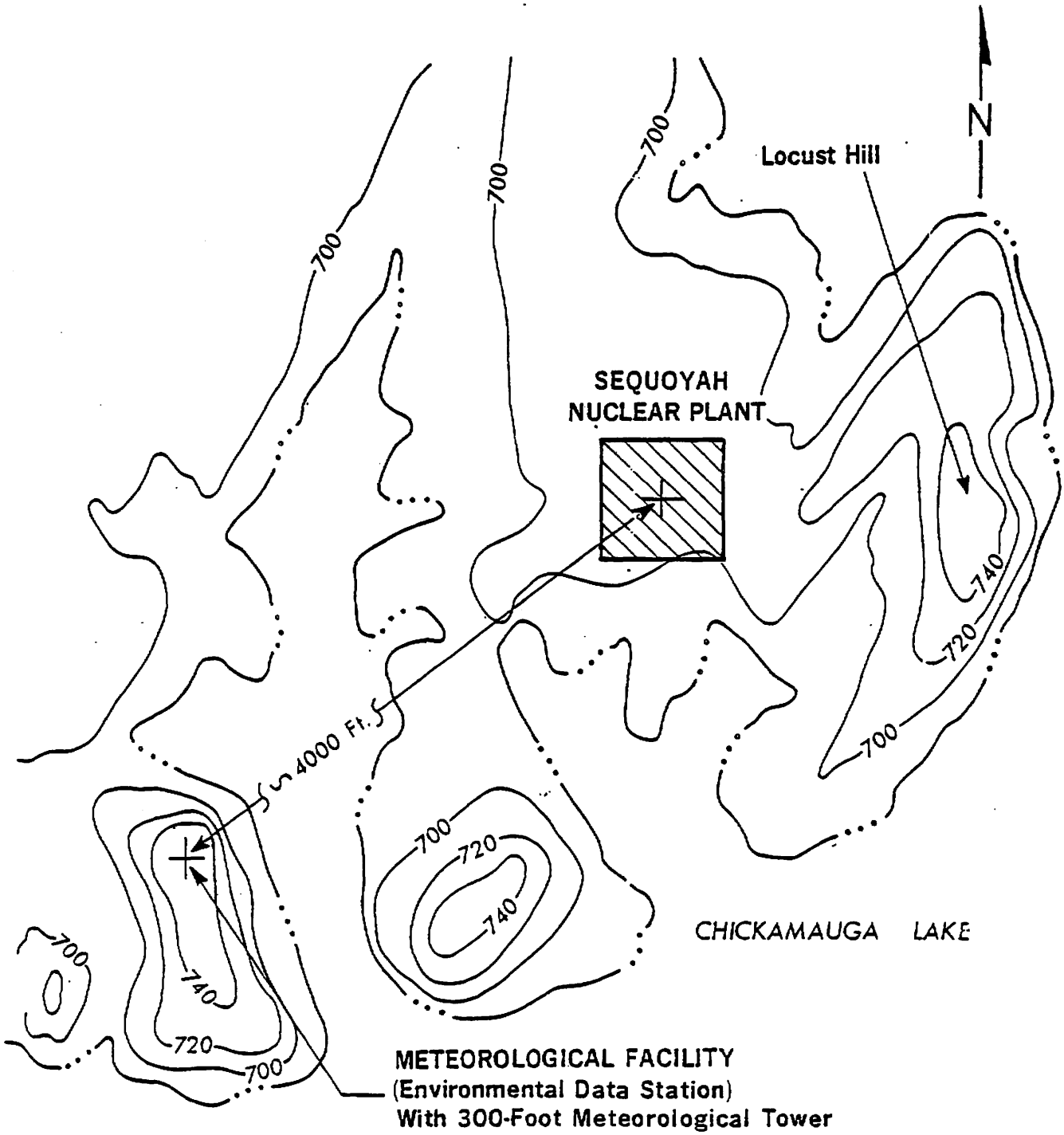

SEQUOYAH NUCLEAR PLANT
FINAL SAFETY ANALYSIS REPORT

Figure 2.3.2-1

Environmental Data Station Location

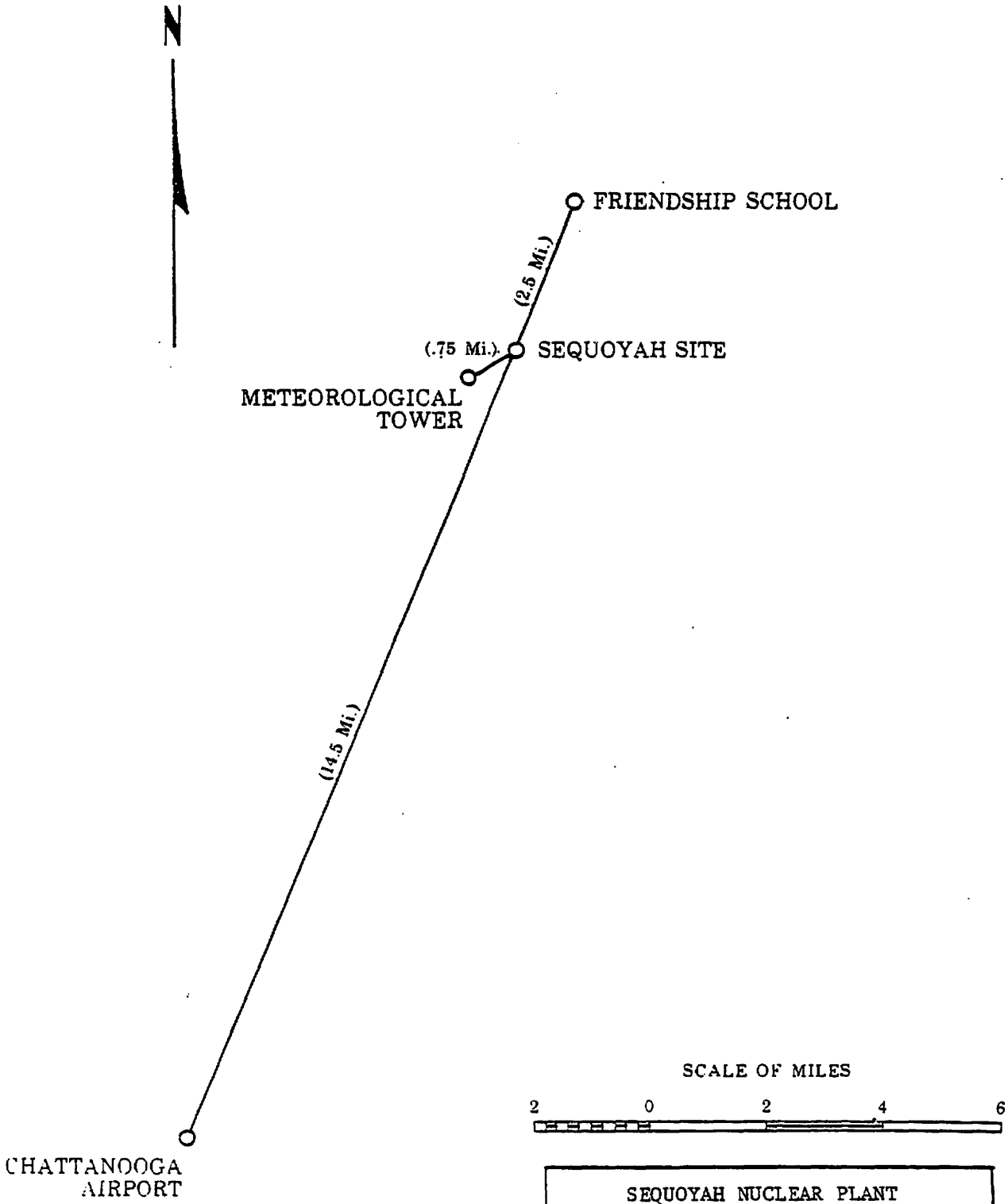

SEQUOYAH NUCLEAR PLANT
FINAL SAFETY ANALYSIS REPORT

Figure 2.3.2-2

Climatological Data Sources

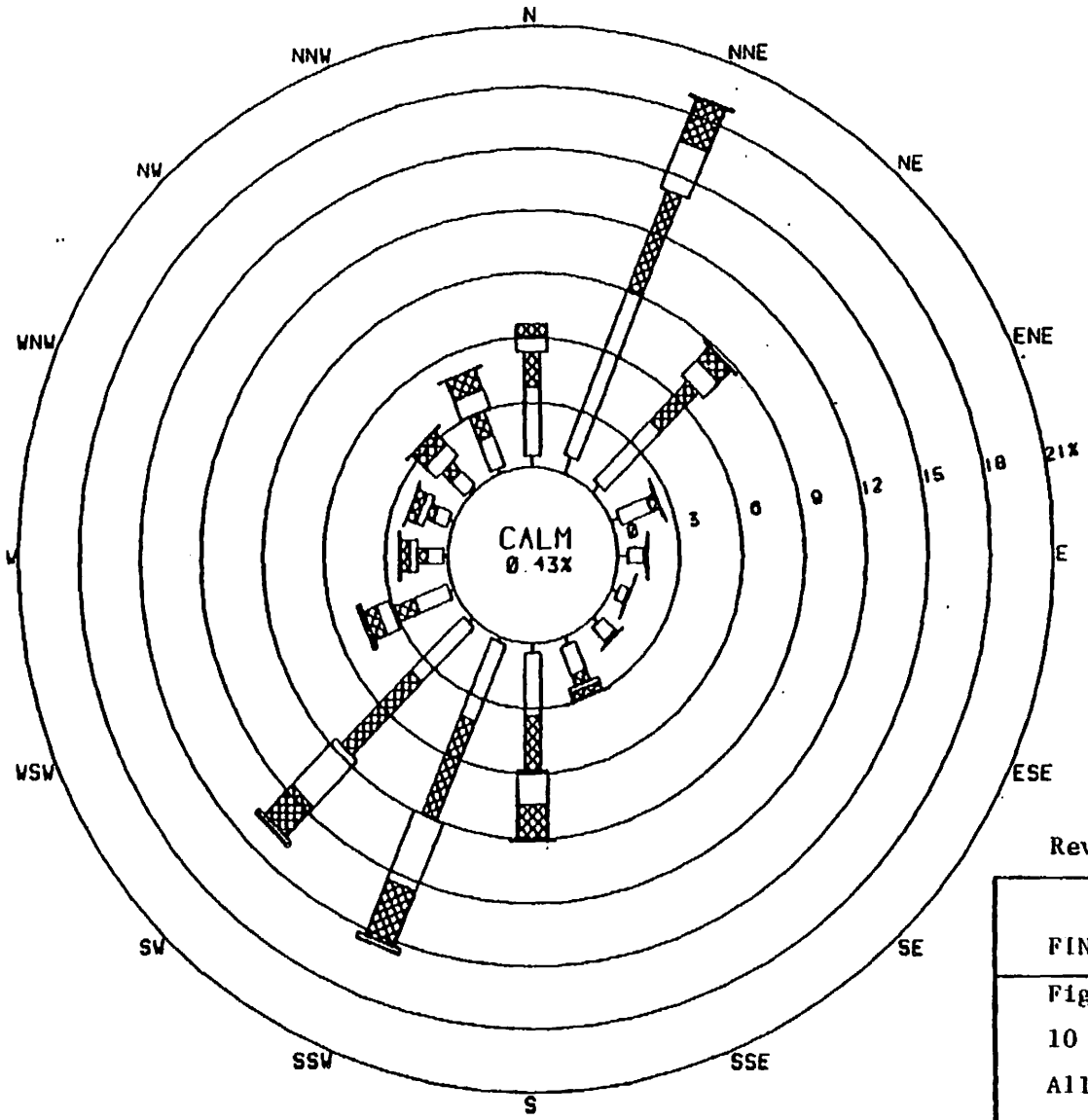

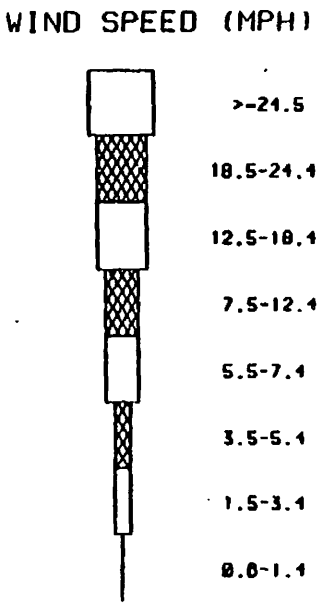

Revised by Amendment 1

SEQUOYAH NUCLEAR PLANT FINAL SAFETY ANALYSIS REPORT
Figure 2.3.2-3 Wind Rose 10 M Wind All Stability Classes January 1, 72 - Dec 31, 75

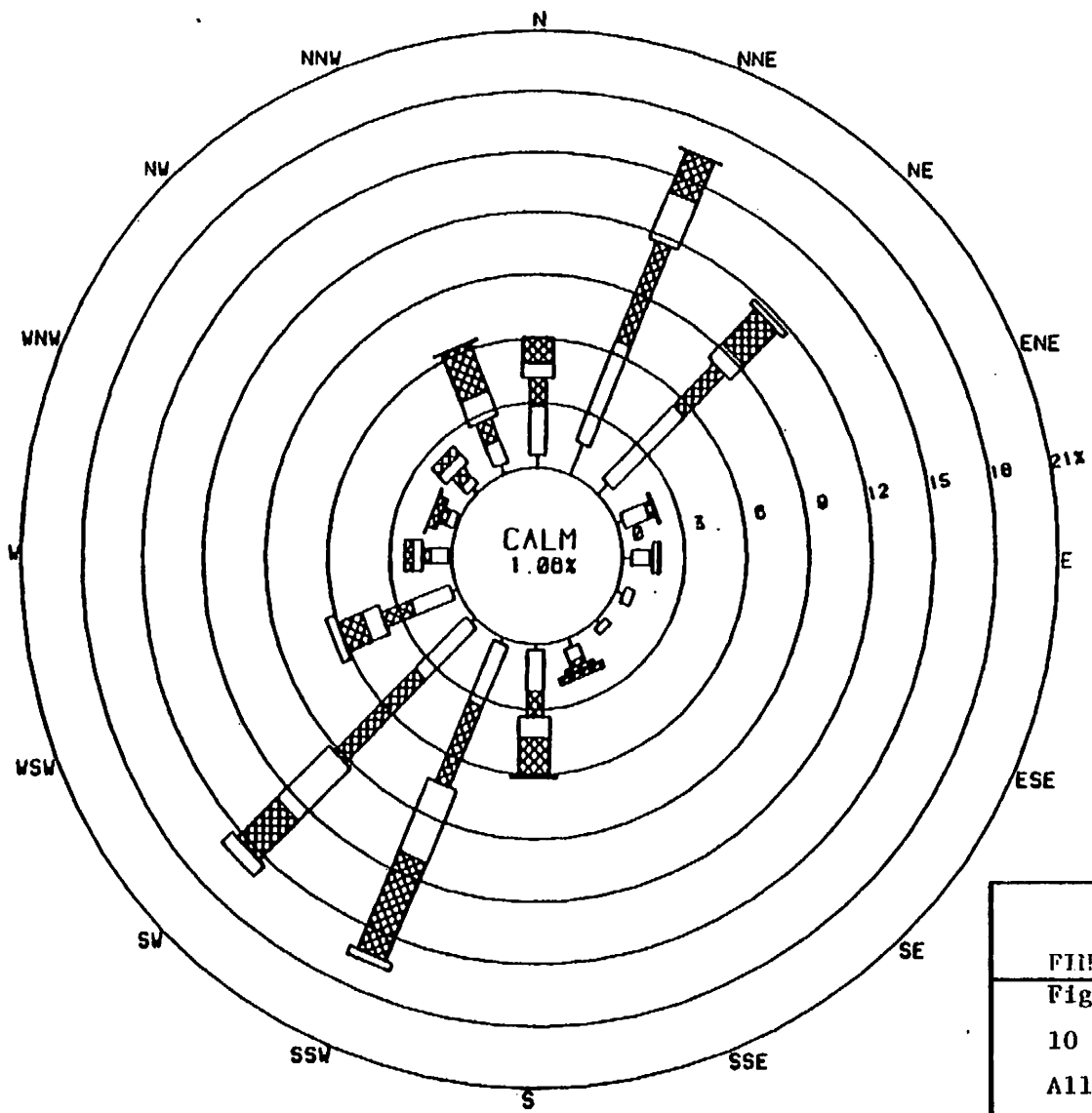

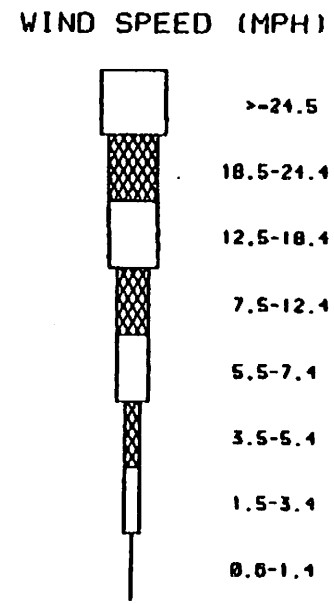

Revised by Amendment 1

SEQUOYAH NUCLEAR PLANT
FINAL SAFETY ANALYSIS REPORT

Figure 2.3.2-4 Wind Rose

10 M Wind

All Stability Classes

January (72-75)

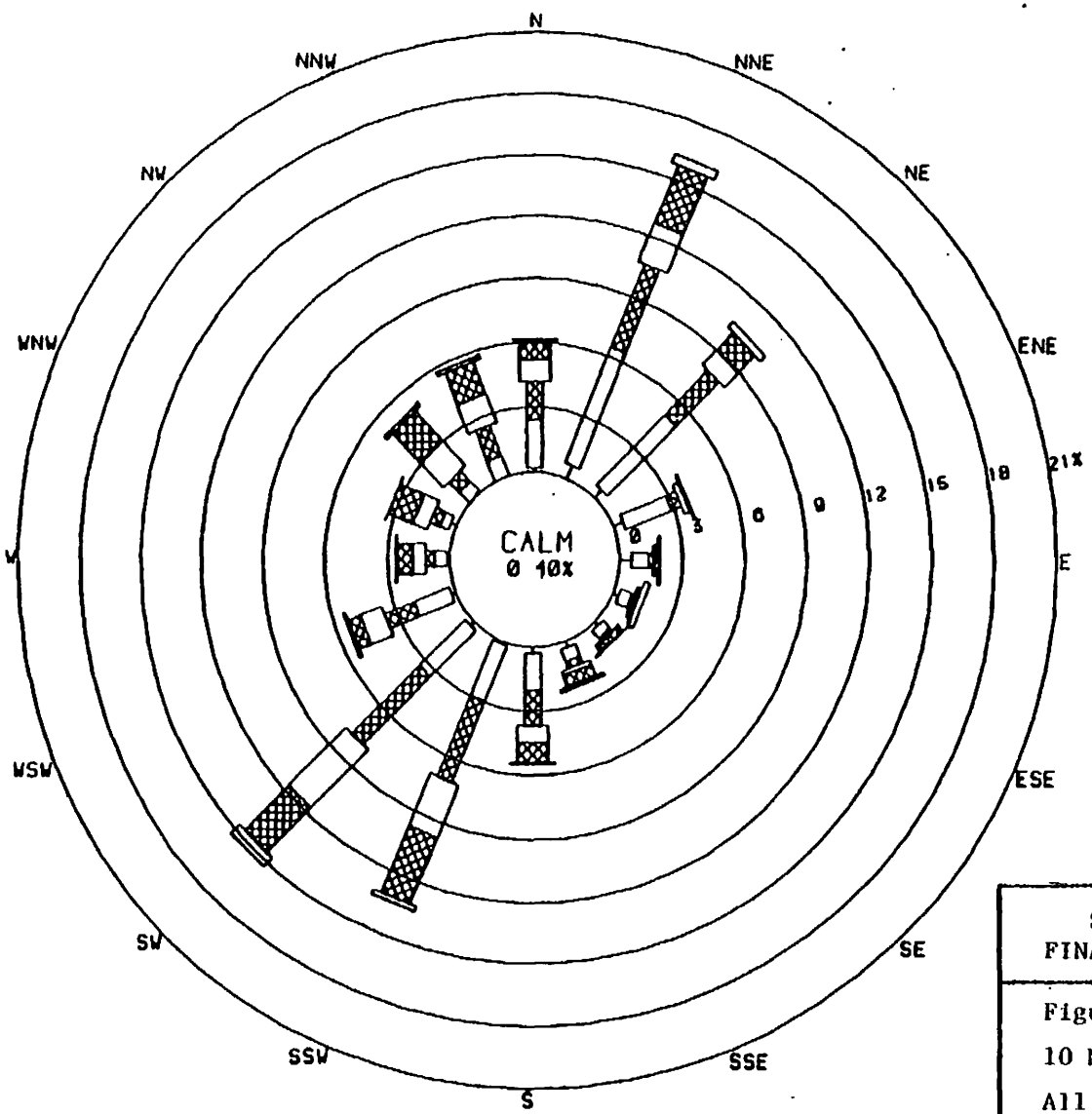

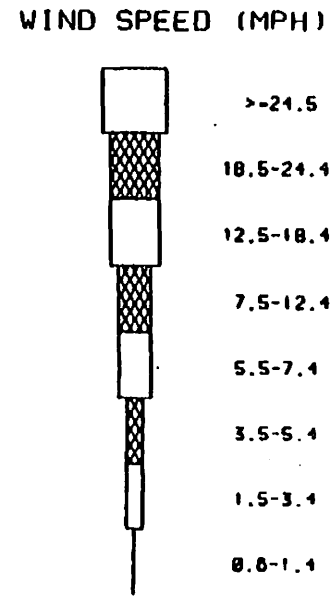

Revised by Amendment 1

SEQUOYAH NUCLEAR PLANT FINAL SAFETY ANALYSIS REPORT
Figure 2.3.2-5 Wind Rose 10 M Wind All Stability Classes February (72-75)

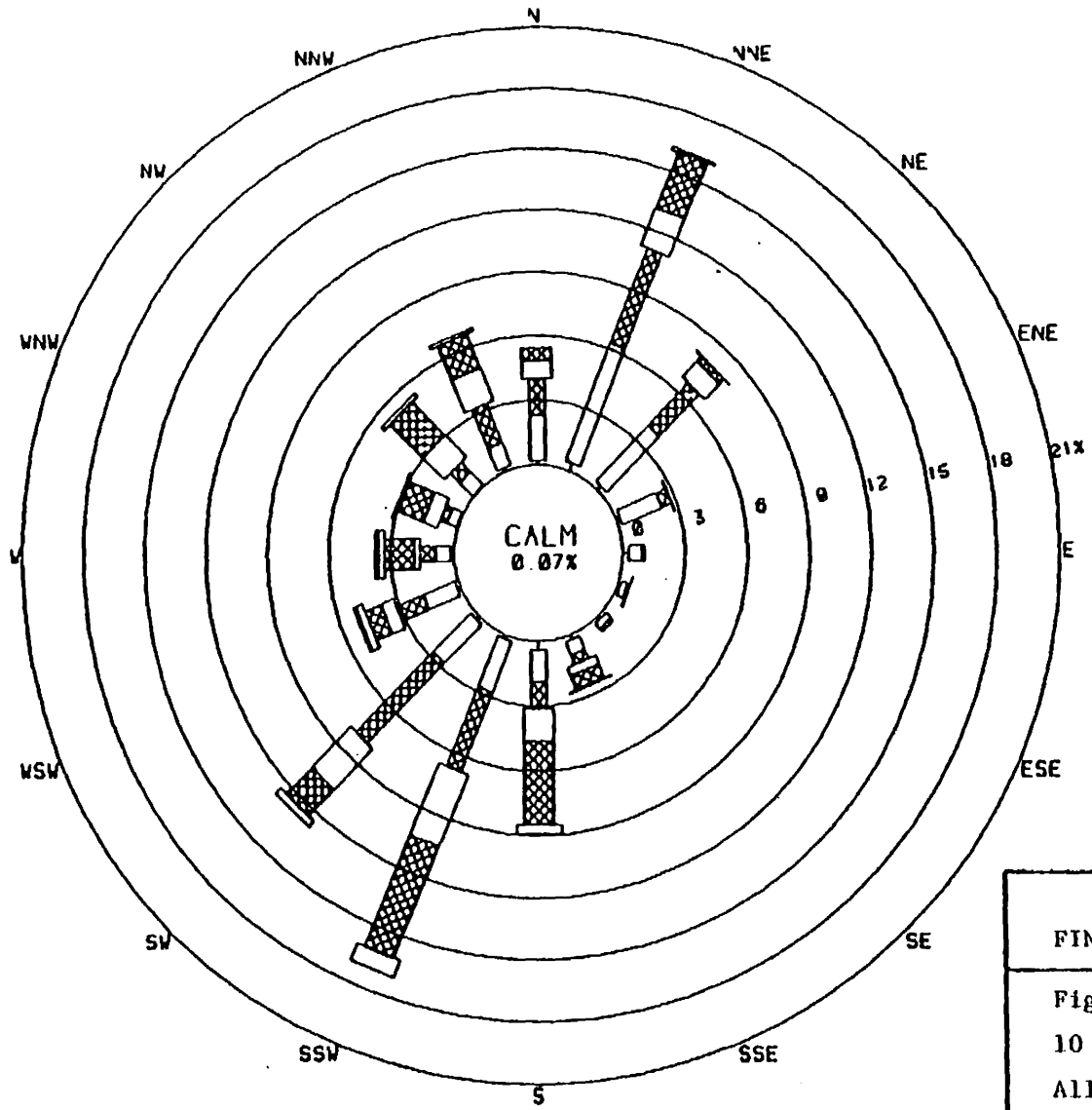

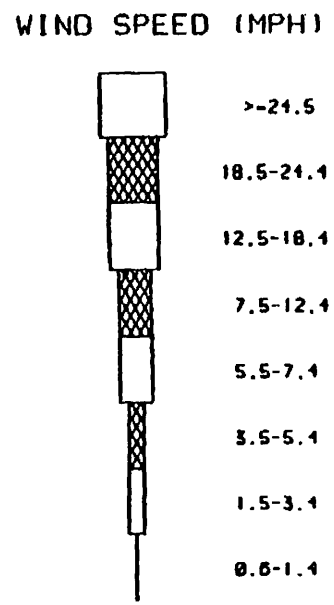

Revised by Amendment 1

SEQUOYAH NUCLEAR PLANT
FINAL SAFETY ANALYSIS REPORT

Figure 2.3.2-6 Wind Rose
10 M Wind
All Stability Classes
March (72-75)

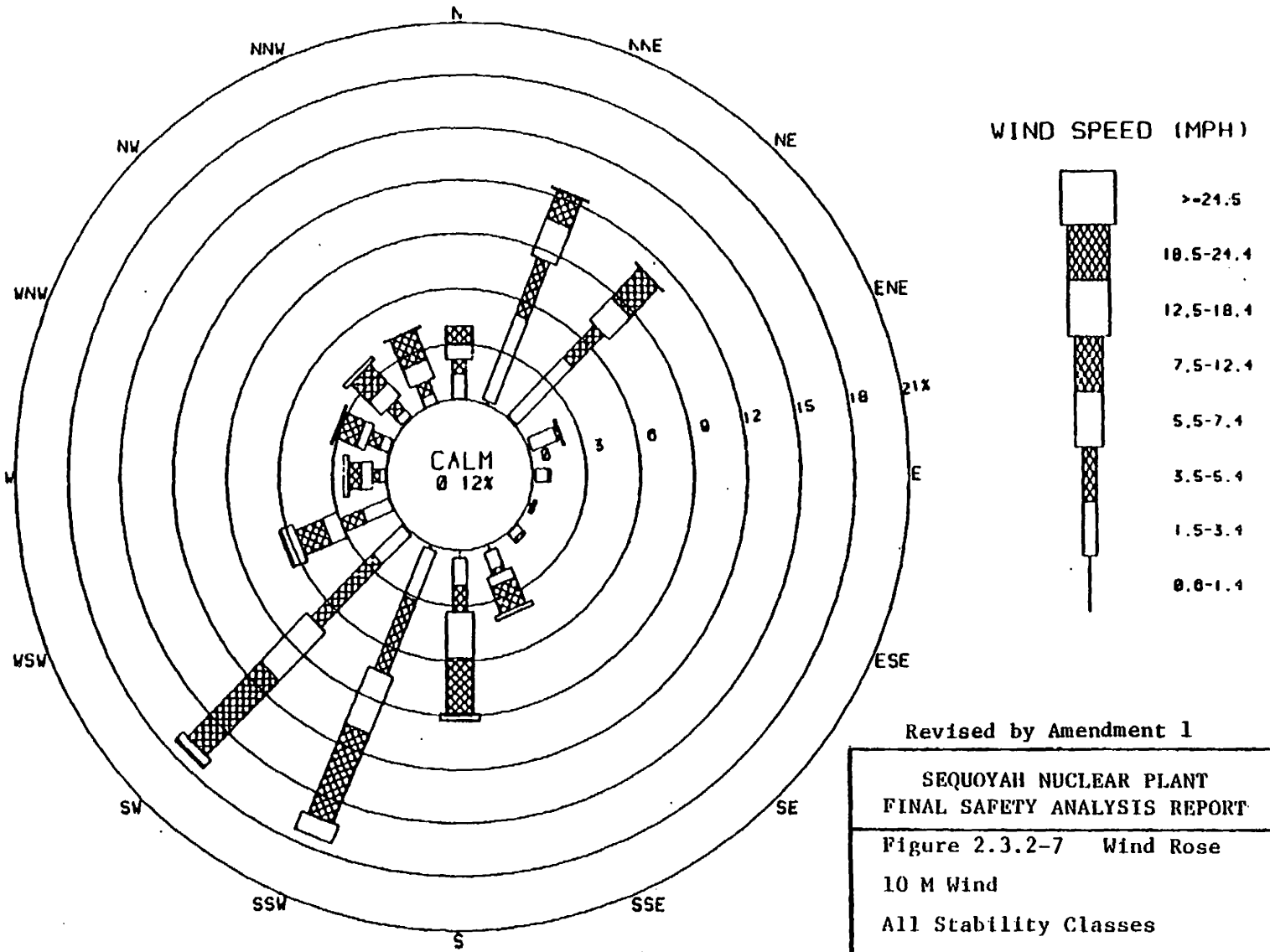

Revised by Amendment 1

SEQUOYAH NUCLEAR PLANT FINAL SAFETY ANALYSIS REPORT
Figure 2.3.2-7 Wind Rose 10 M Wind All Stability Classes April (72-75)

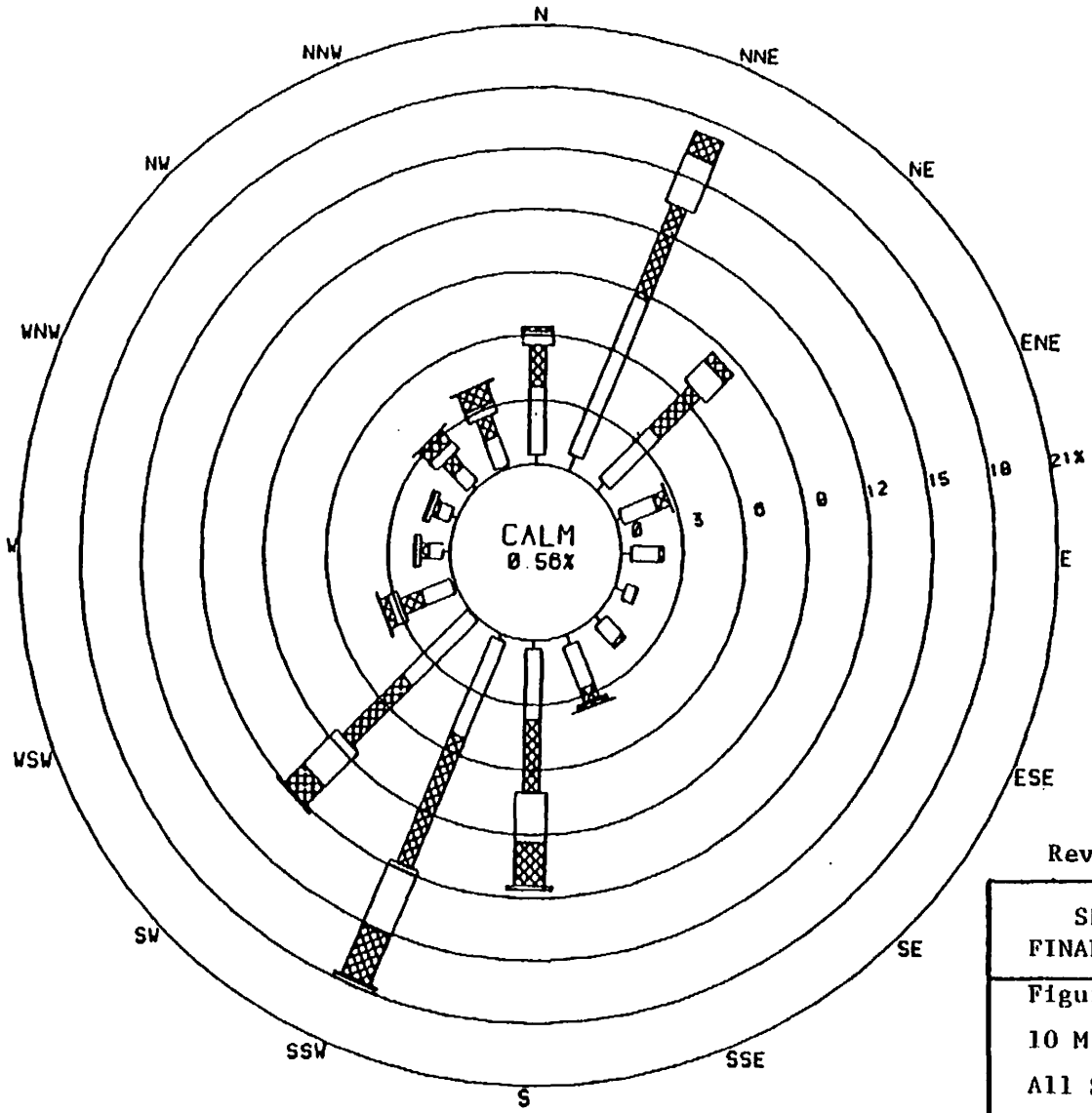

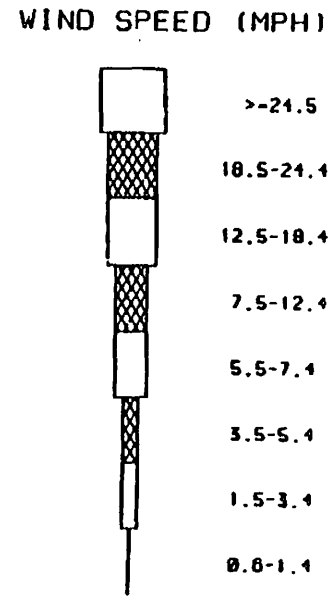

Revised by Amendment 1

SEQUOYAH NUCLEAR PLANT FINAL SAFETY ANALYSIS REPORT
Figure 2.3.2-8 Wind Rose 10 M Wind All Stability Classes May (72-75)

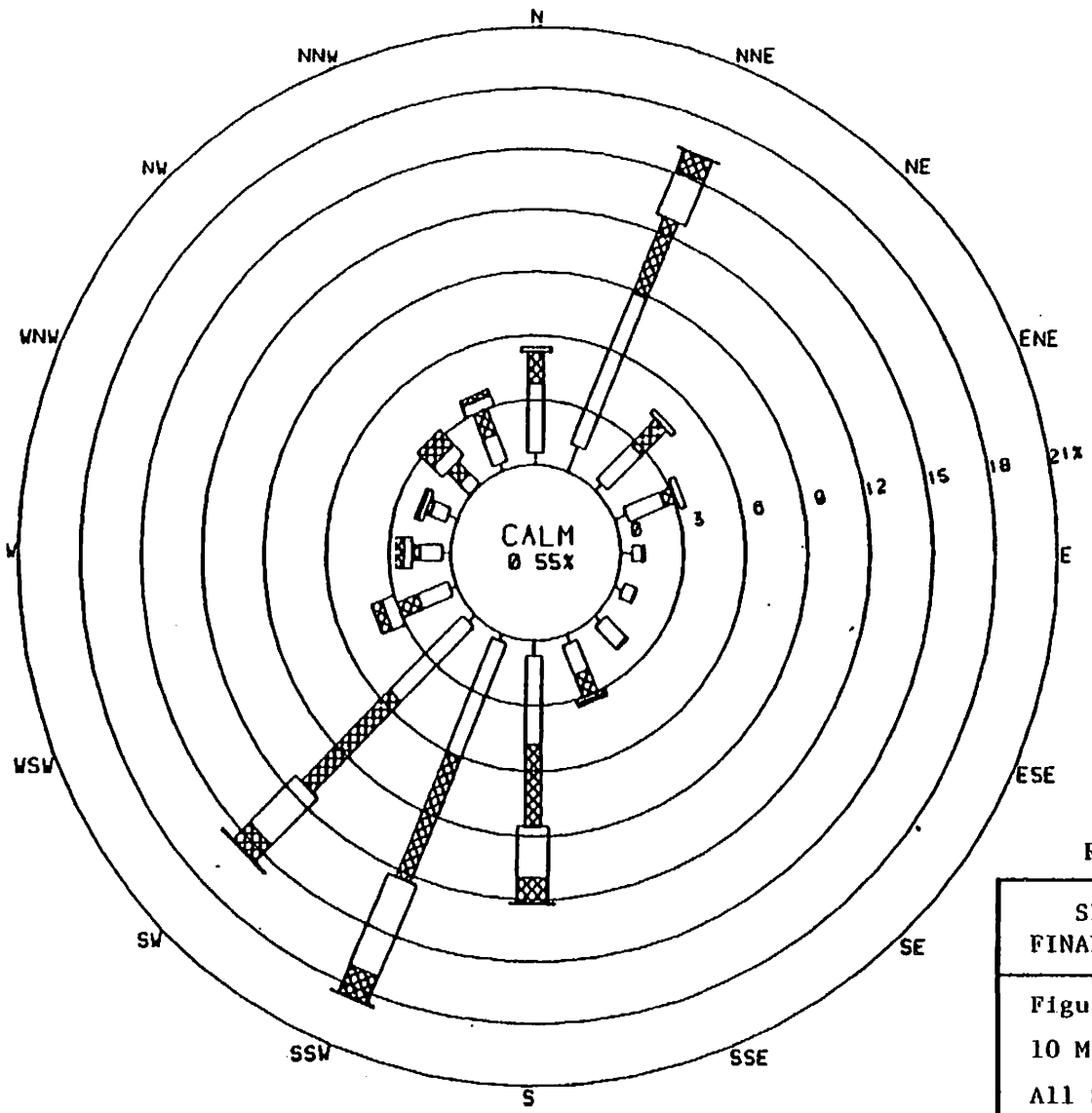

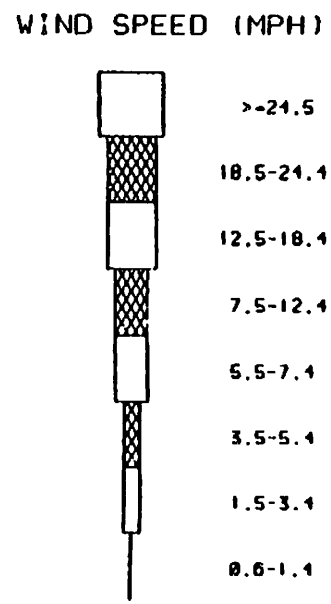

Revised by Amendment 1

SEQUOYAH NUCLEAR PLANT FINAL SAFETY ANALYSIS REPORT
Figure 2.3.2-9 Wind Rose 10 M Wind All Stability Classes June (72-75)

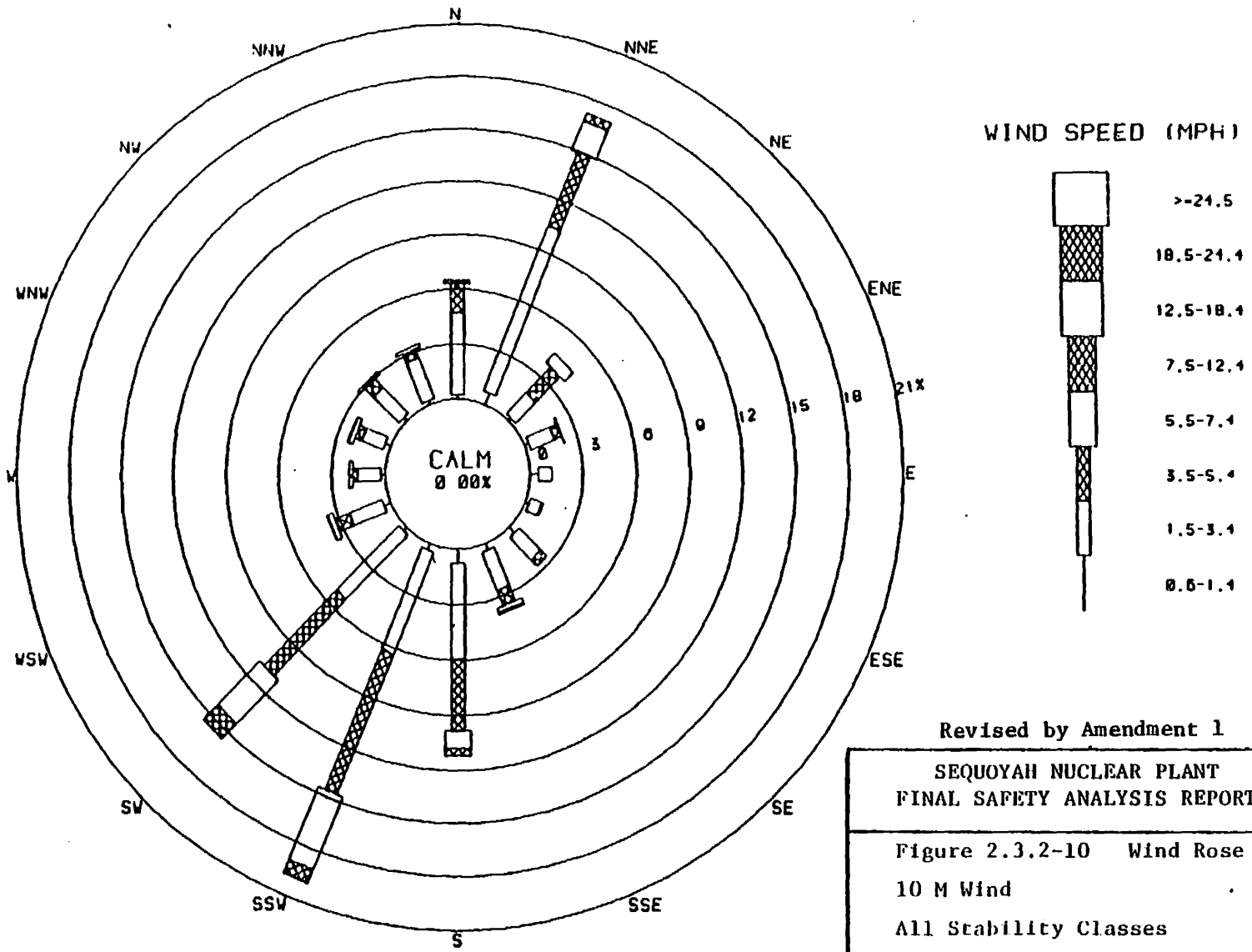

Revised by Amendment 1

SEQUOYAH NUCLEAR PLANT FINAL SAFETY ANALYSIS REPORT
Figure 2.3.2-10 Wind Rose 10 M Wind All Stability Classes July (72-75)

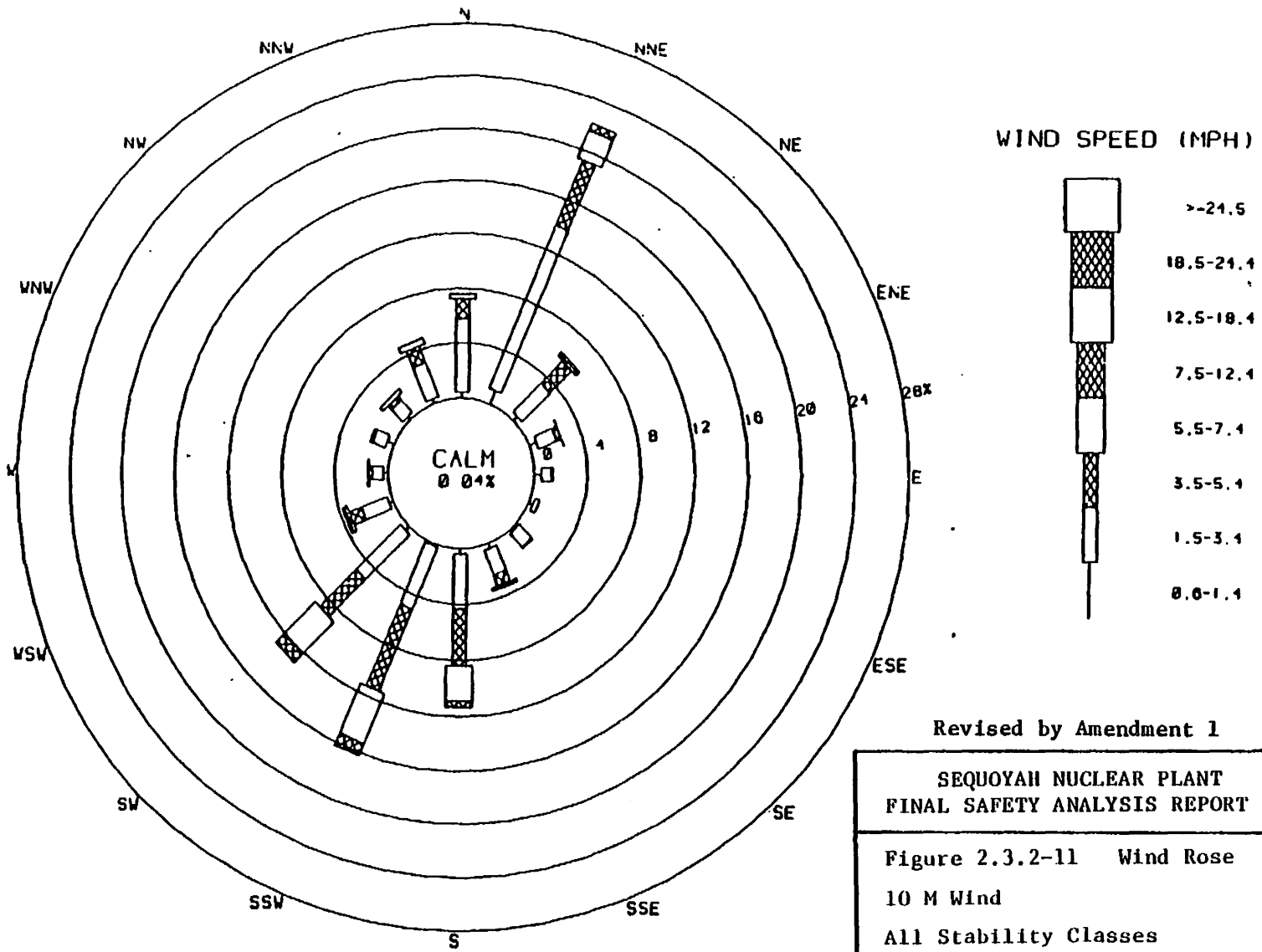

Revised by Amendment 1

SEQUOYAH NUCLEAR PLANT FINAL SAFETY ANALYSIS REPORT
Figure 2.3.2-11 Wind Rose 10 M Wind All Stability Classes August (72-75)

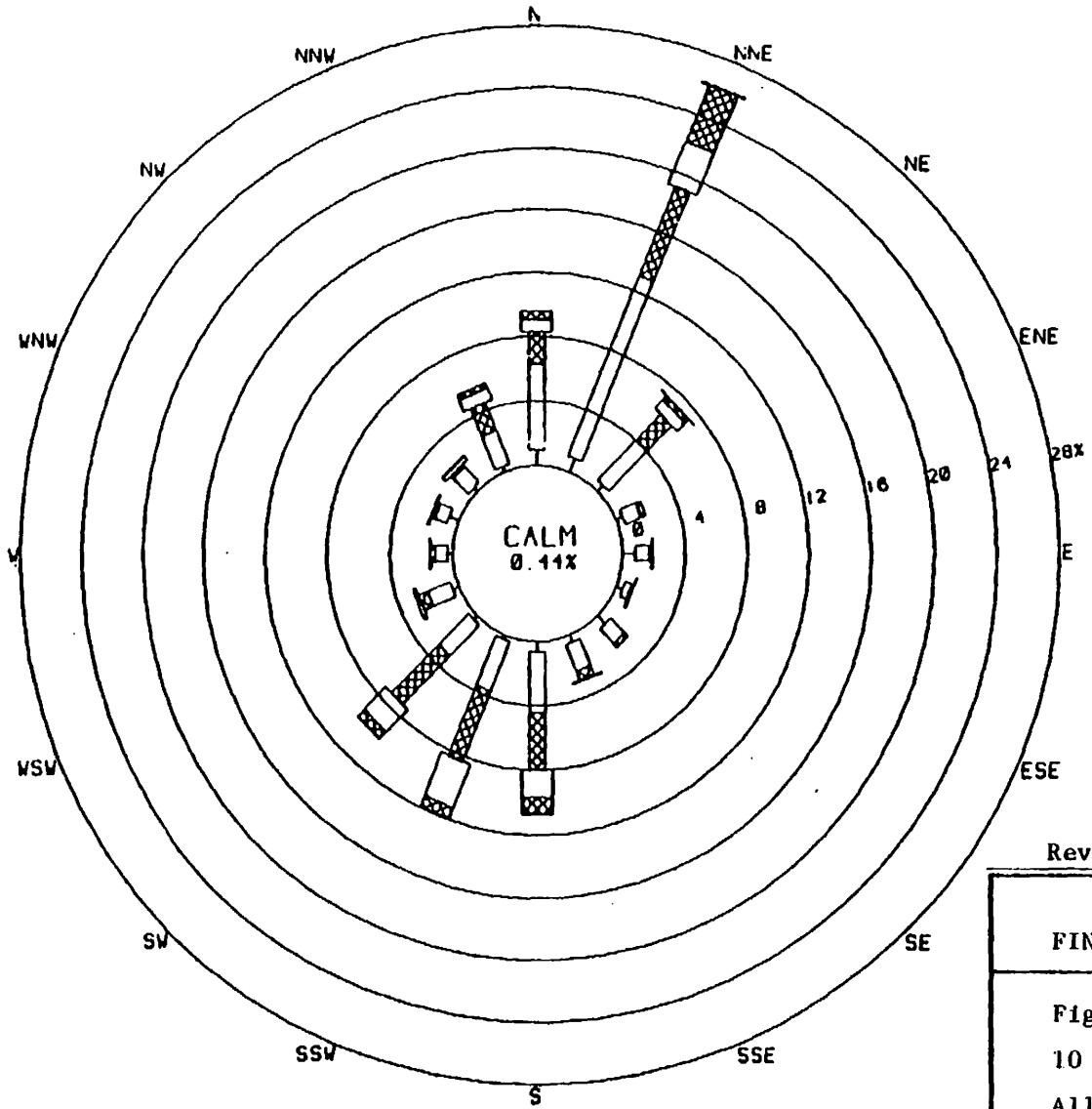

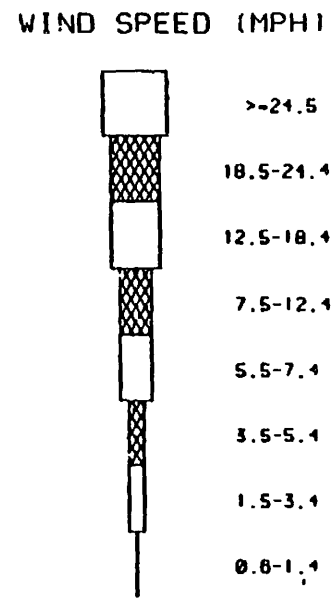

Revised by Amendment 1

SEQUOYAH NUCLEAR PLANT FINAL SAFETY ANALYSIS REPORT
Figure 2.3.2-12 Wind Rose 10 M Wind All Stability Classes Sept. (72-75)

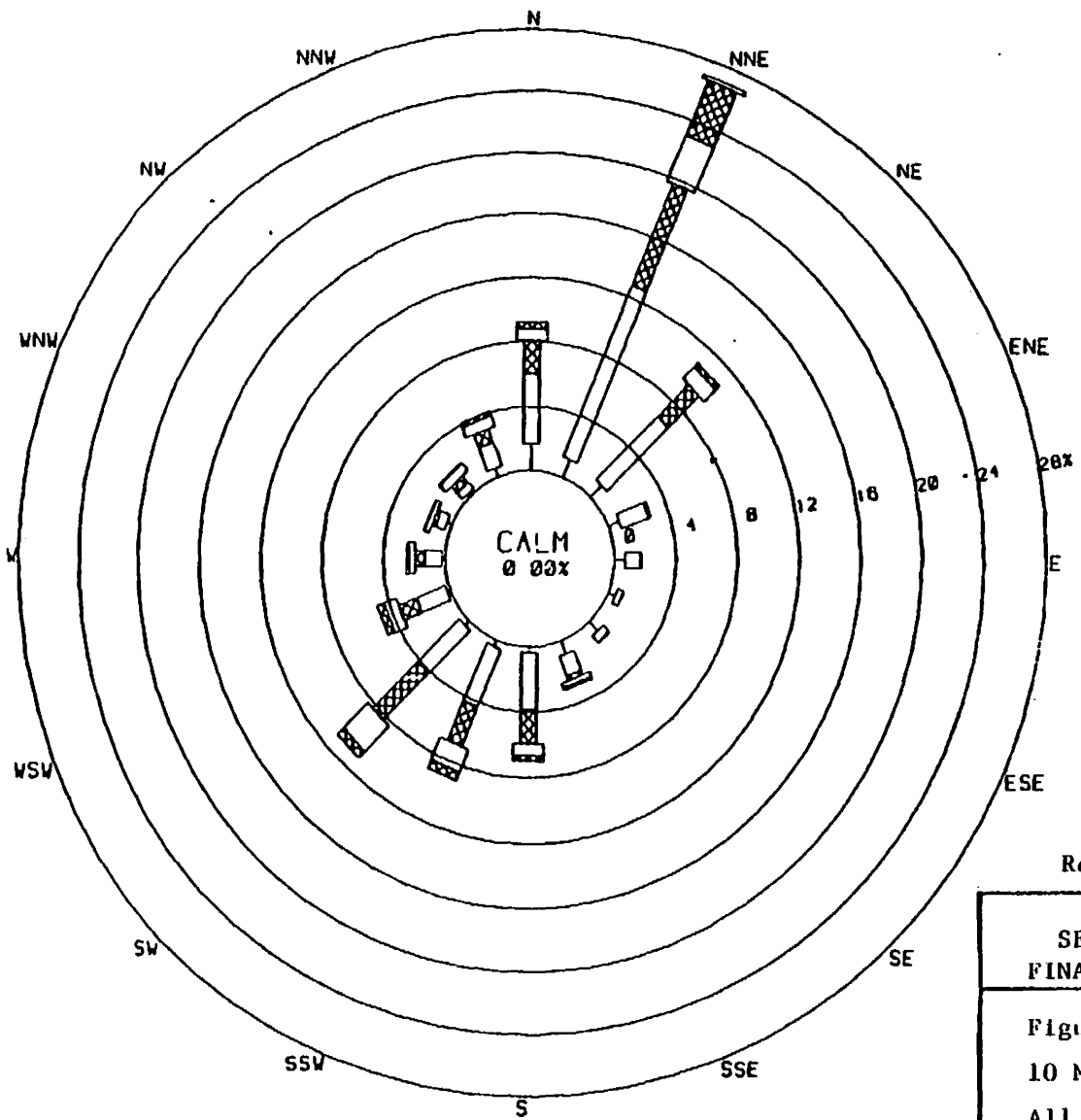

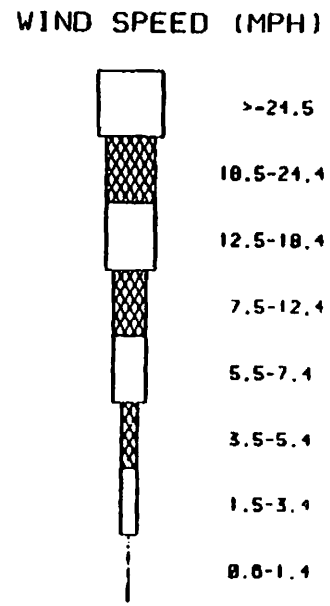

Revised by Amendment 1

SEQUOYAH NUCLEAR PLANT
FINAL SAFETY ANALYSIS REPORT

Figure 2.3.2-13 Wind Rose
10 M Wind
All Stability Classes
October (72-75)

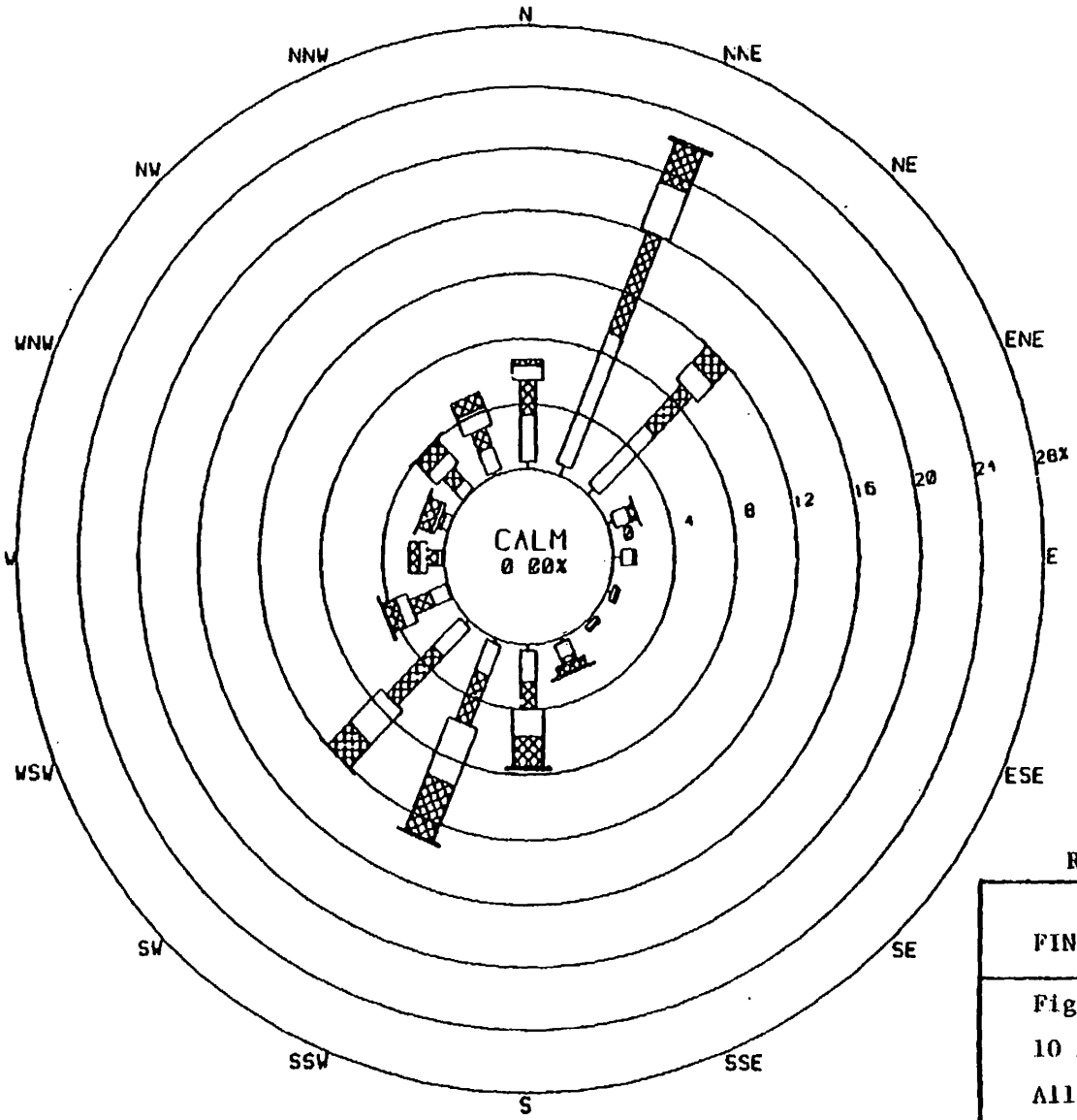

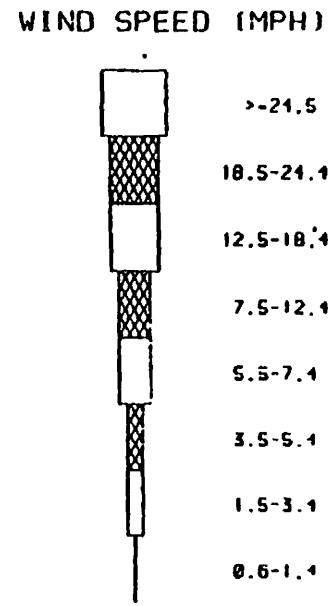

Revised by Amendment 1

SEQUOYAH NUCLEAR PLANT FINAL SAFETY ANALYSIS REPORT
Figure 2.3.2-14 10 M Wind All Stability Classes November (72-75)

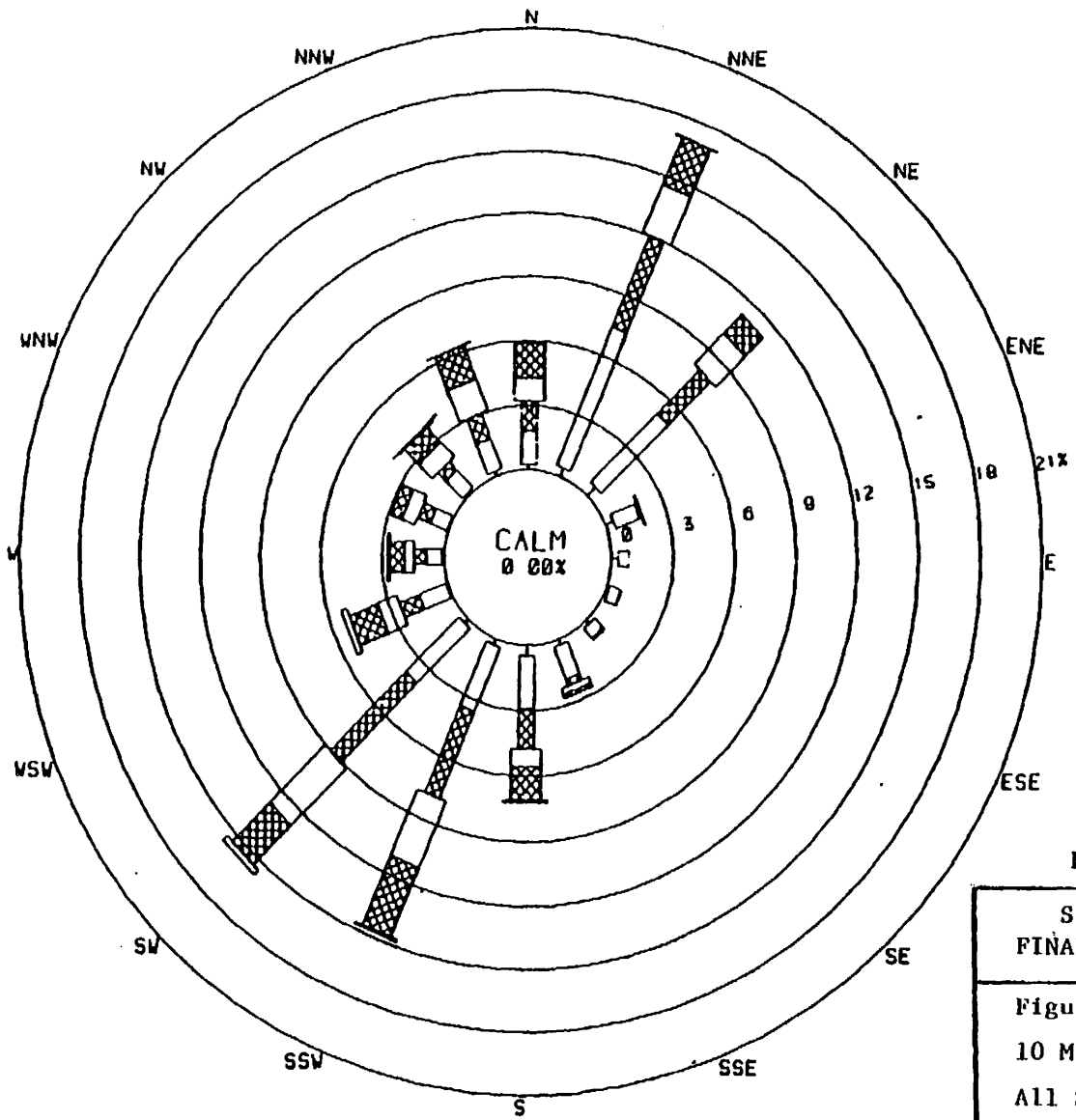

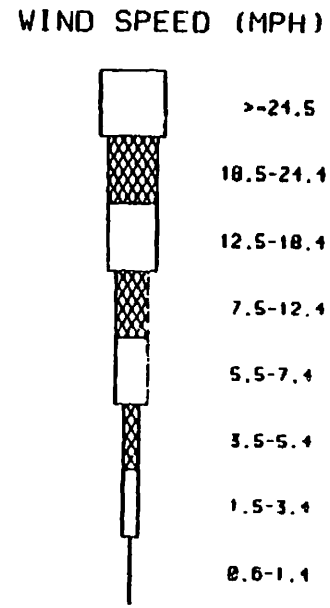

Revised by Amendment 1

SEQUOYAH NUCLEAR PLANT FINAL SAFETY ANALYSIS REPORT
Figure 2.3.2-15 10 M Wind All Stability Classes December (72-75)

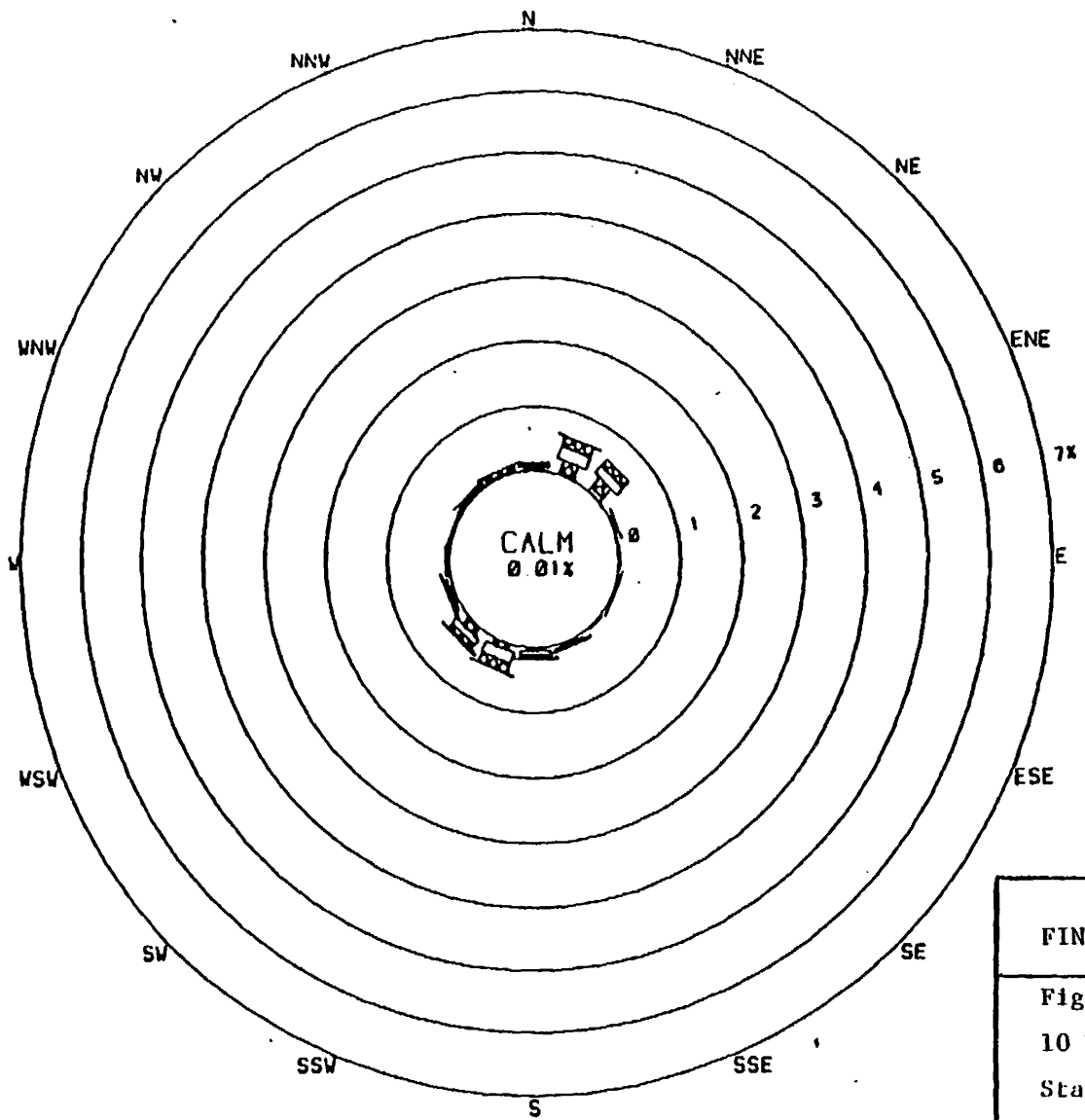

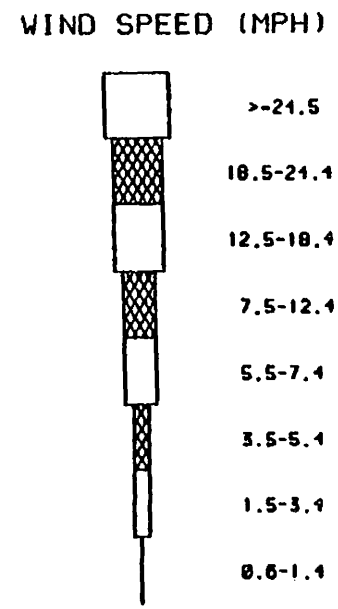

Revised by Amendment 1

SEQUOYAH NUCLEAR PLANT FINAL SAFETY ANALYSIS REPORT
Figure 2.3.2-16 10 M Wind, 9 & 46 M Temp Stability Class A Jan 1, 72 - Dec 31, 75

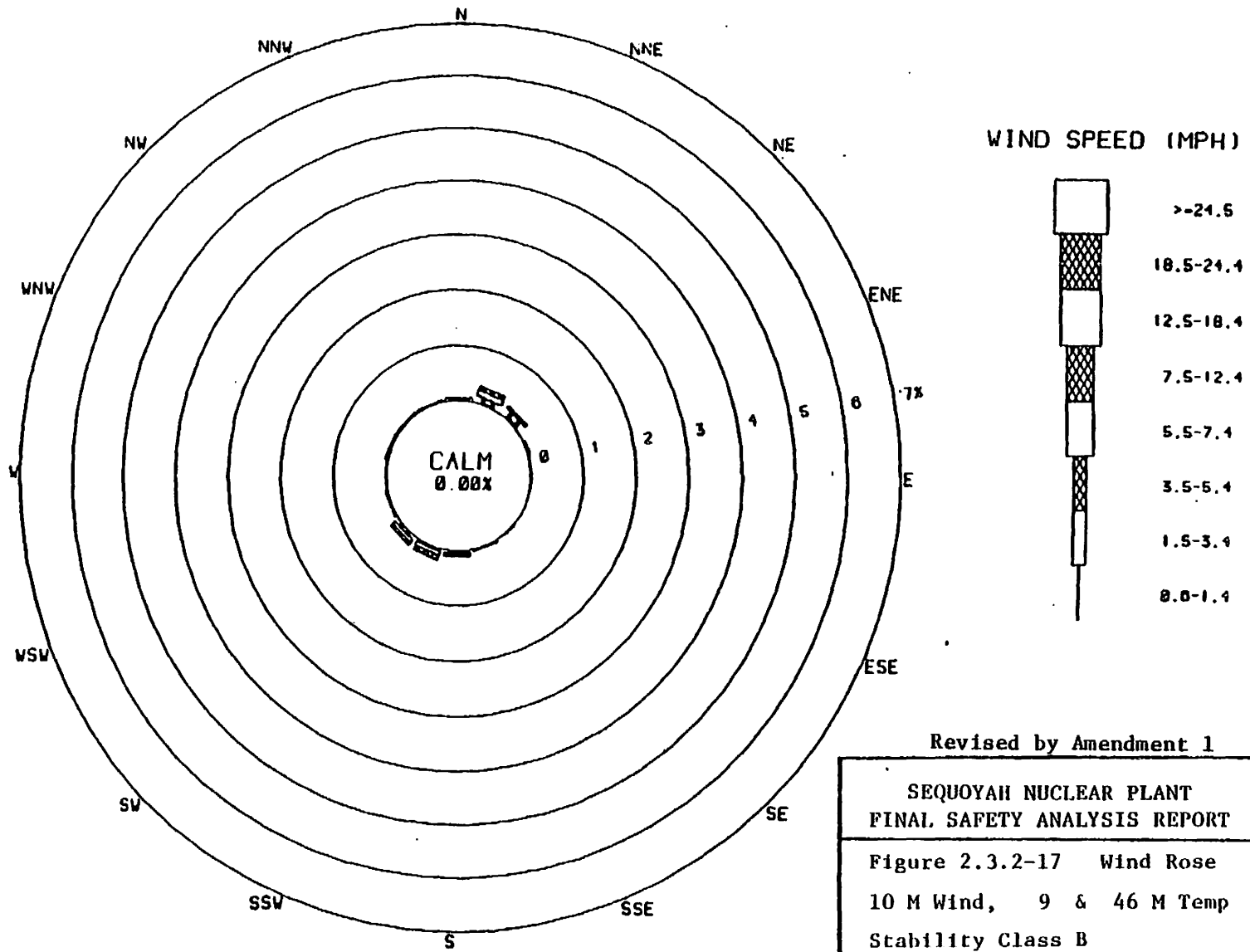

Revised by Amendment 1

SEQUOYAH NUCLEAR PLANT FINAL SAFETY ANALYSIS REPORT
Figure 2.3.2-17 Wind Rose 10 M Wind, 9 & 46 M Temp Stability Class B Jan 1, 72 - Dec 31, 75

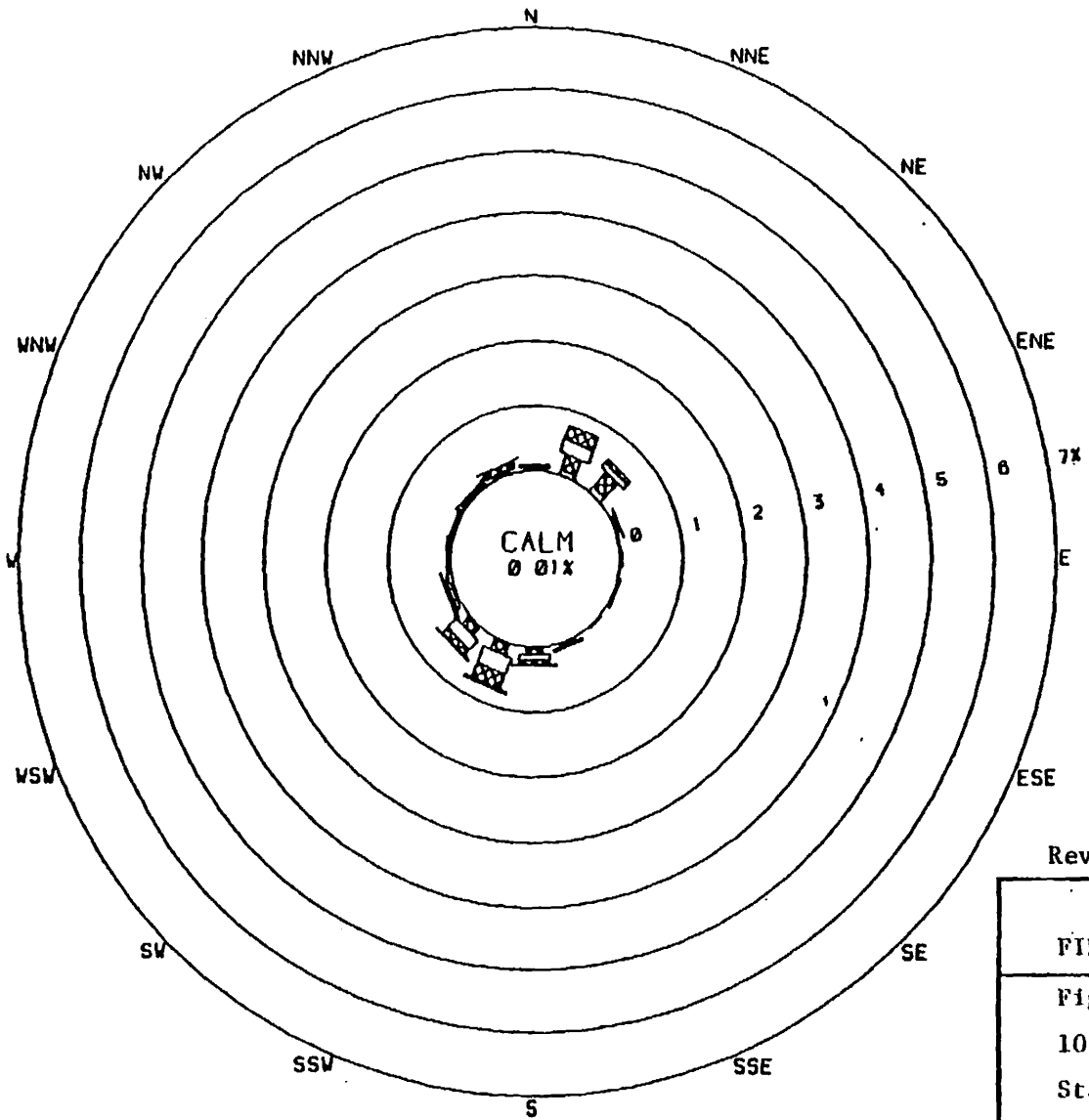

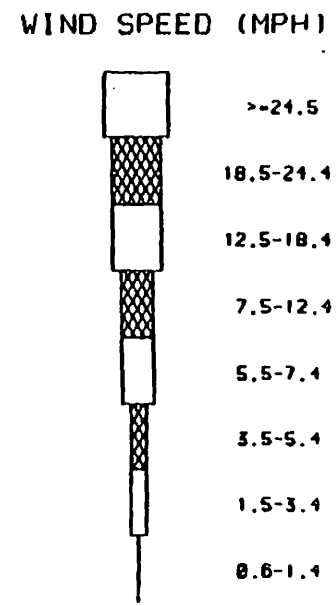

Revised by Amendment 1

SEQUOYAH NUCLEAR PLANT FINAL SAFETY ANALYSIS REPORT
Figure 2.3.2-18 Wind Rose 10 M Wind, 9 & 46 M Temp Stability Class C Jan 1, 72 - Dec 31, 75

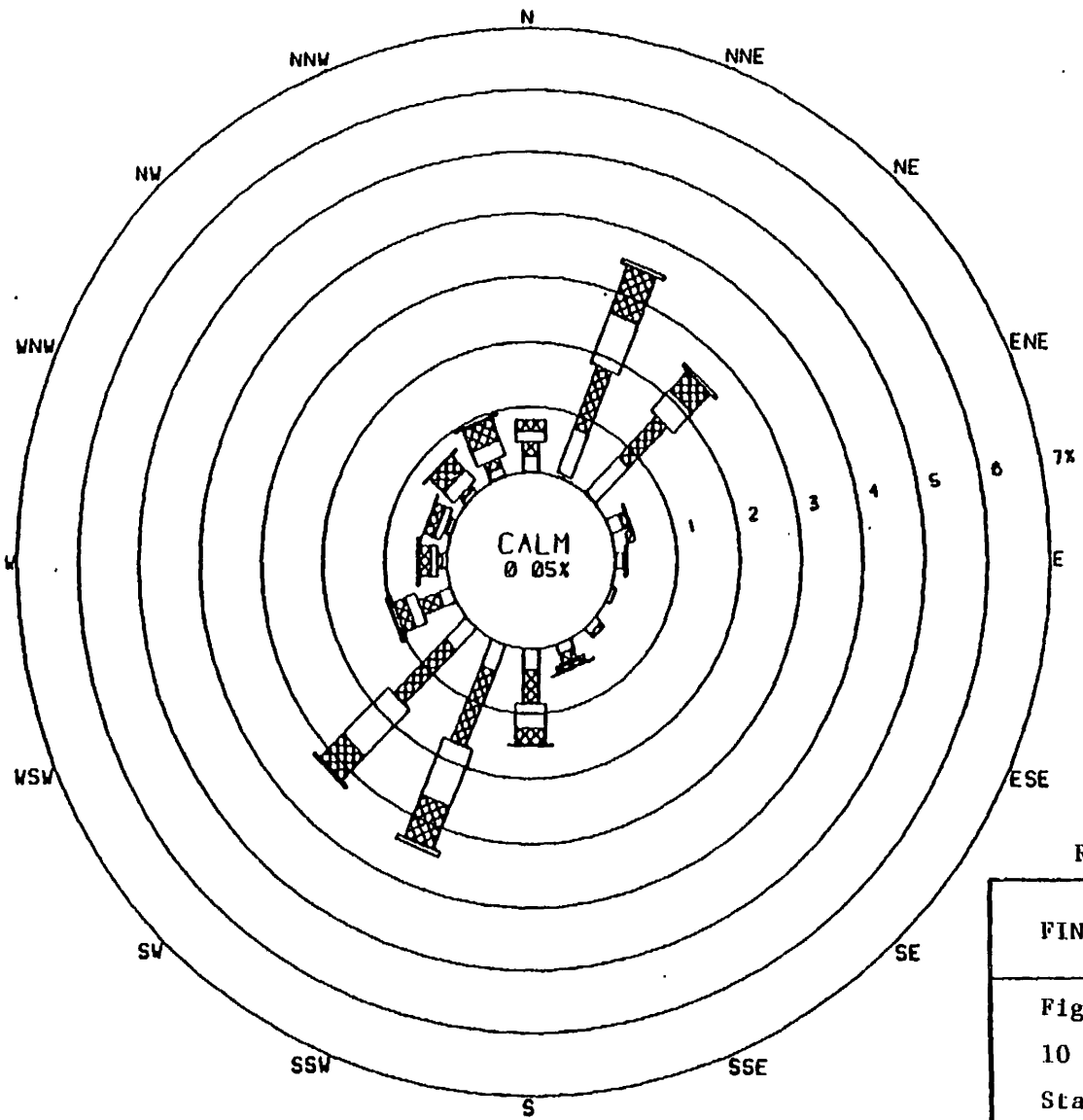

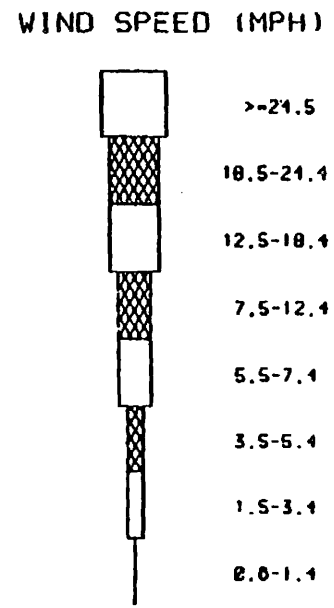

Revised by Amendment 1

SEQUOYAH NUCLEAR PLANT FINAL SAFETY ANALYSIS REPORT
Figure 2.3.2-19 Wind Rose 10 M Wind, 9 & 46 M Temp Stability Class D Jan 1, 72 - Dec 31, 75

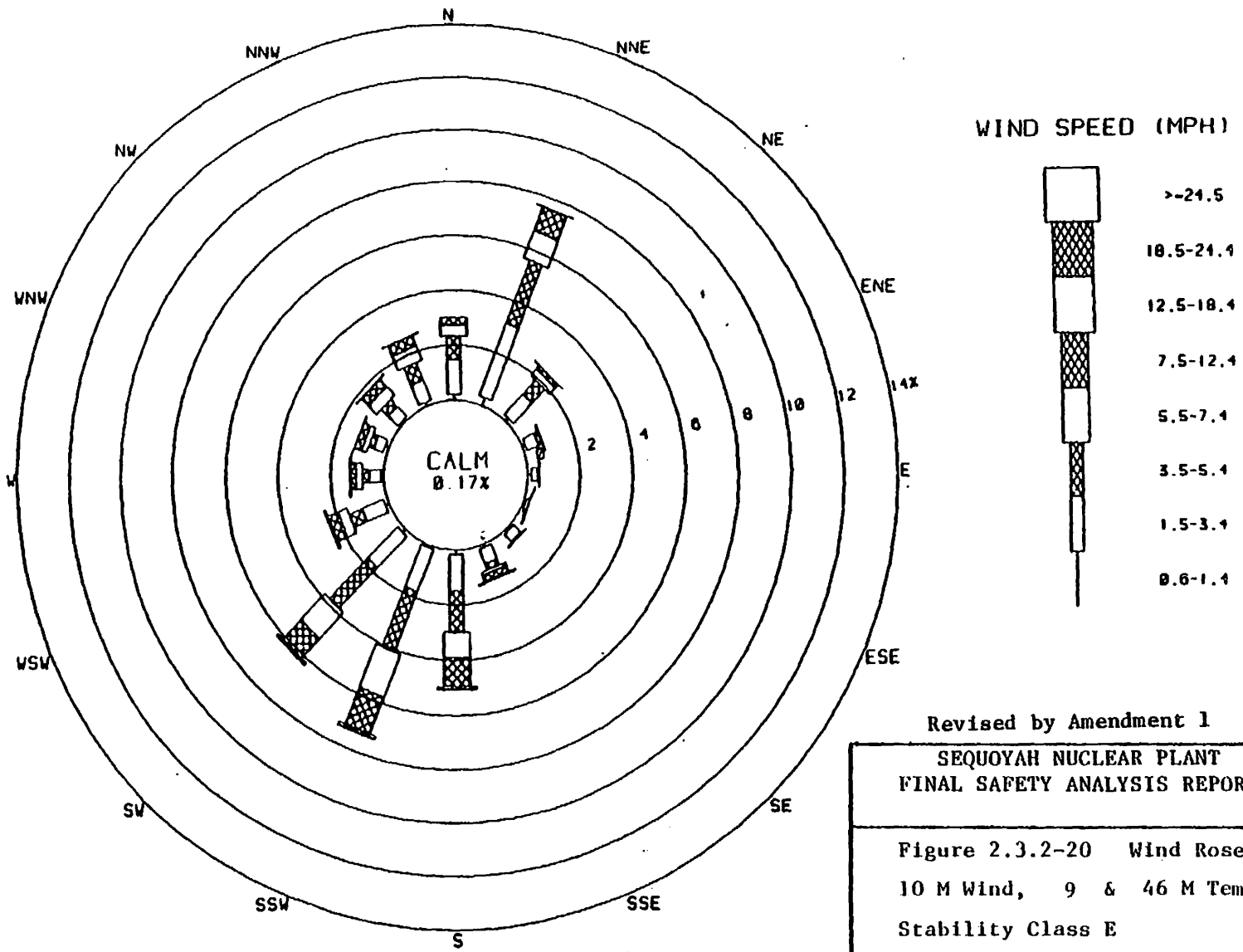

Revised by Amendment 1

SEQUOYAH NUCLEAR PLANT FINAL SAFETY ANALYSIS REPORT
Figure 2.3.2-20 Wind Rose 10 M Wind, 9 & 46 M Temp Stability Class E Jan 1, 72 - Dec 31, 75

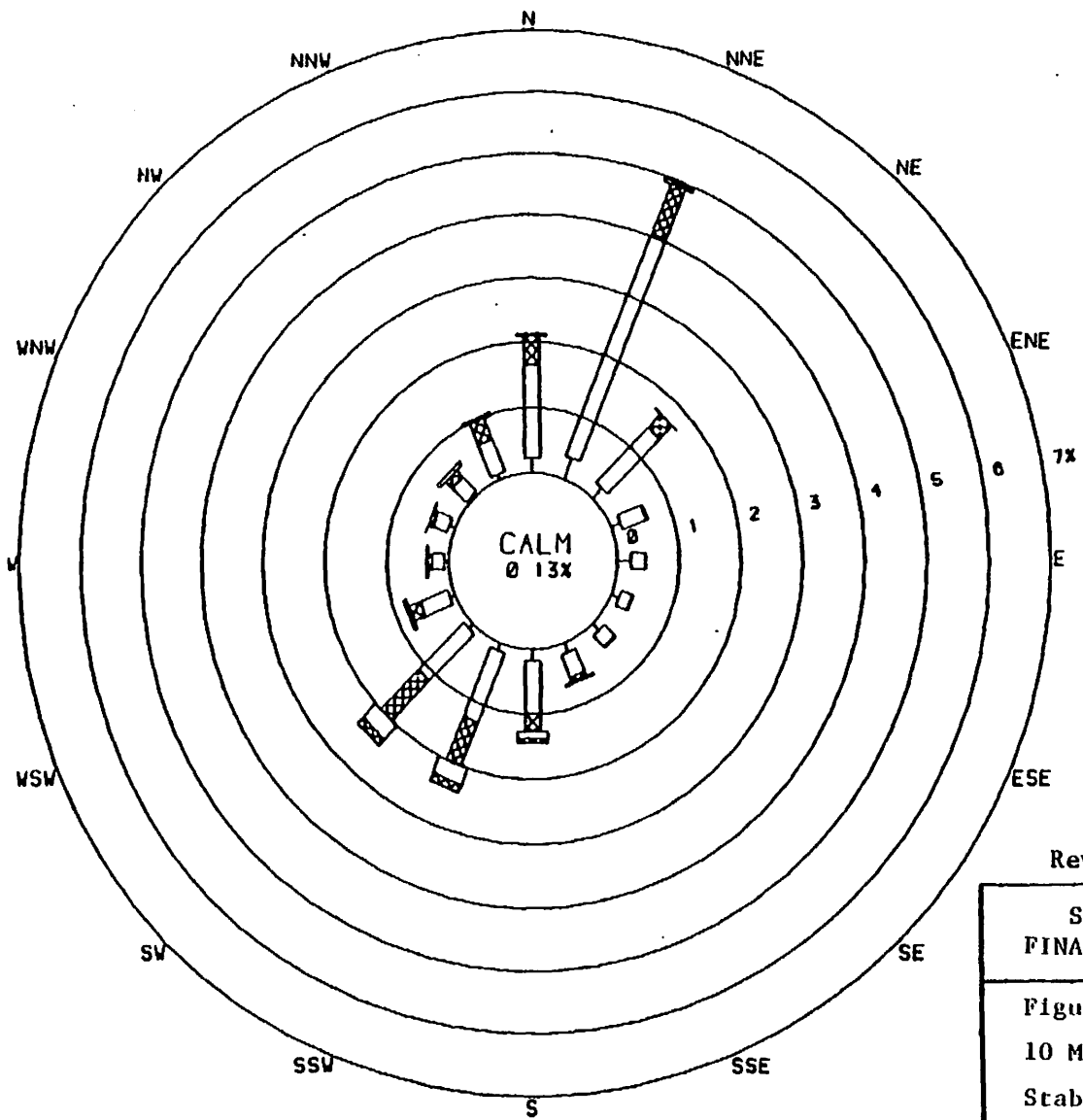

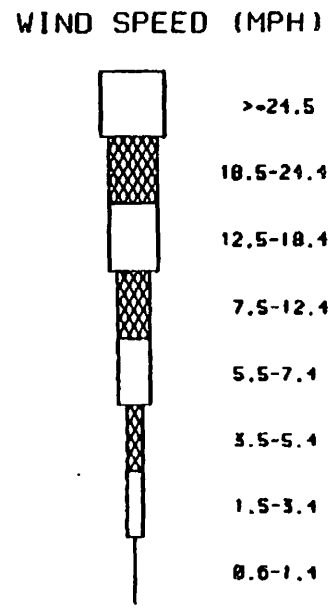

Revised by Amendment 1

SEQUOYAH NUCLEAR PLANT FINAL SAFETY ANALYSIS REPORT
Figure 2.3.2-21 Wind Rose 10 M Wind, 9 & 46 M Temp Stability Class F Jan 1, 72 - Dec 31, 75

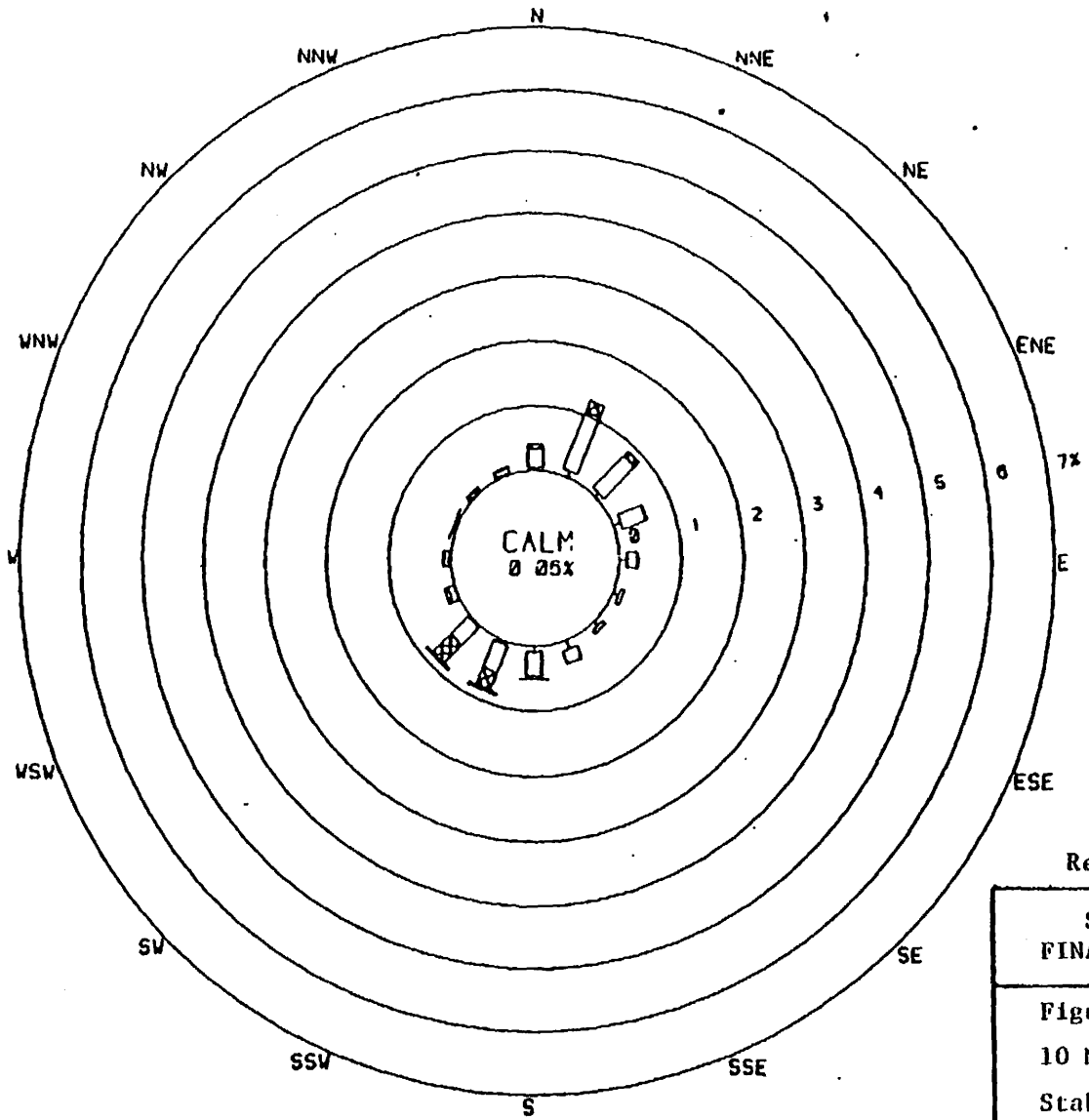

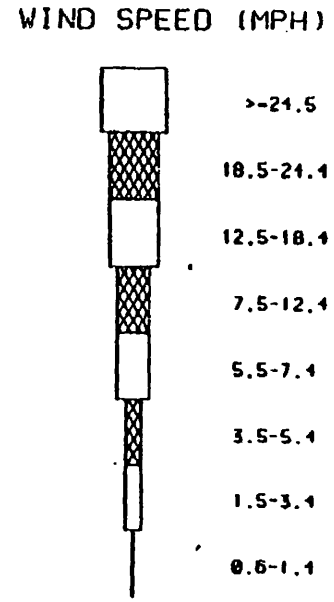

Revised by Amendment 1

SEQUOYAH NUCLEAR PLANT FINAL SAFETY ANALYSIS REPORT
Figure 2.3.2-22 Wind Rose 10 M Wind, 9 & 46 M Temp Stability Class G Jan 1, 72 - Dec 31, 75

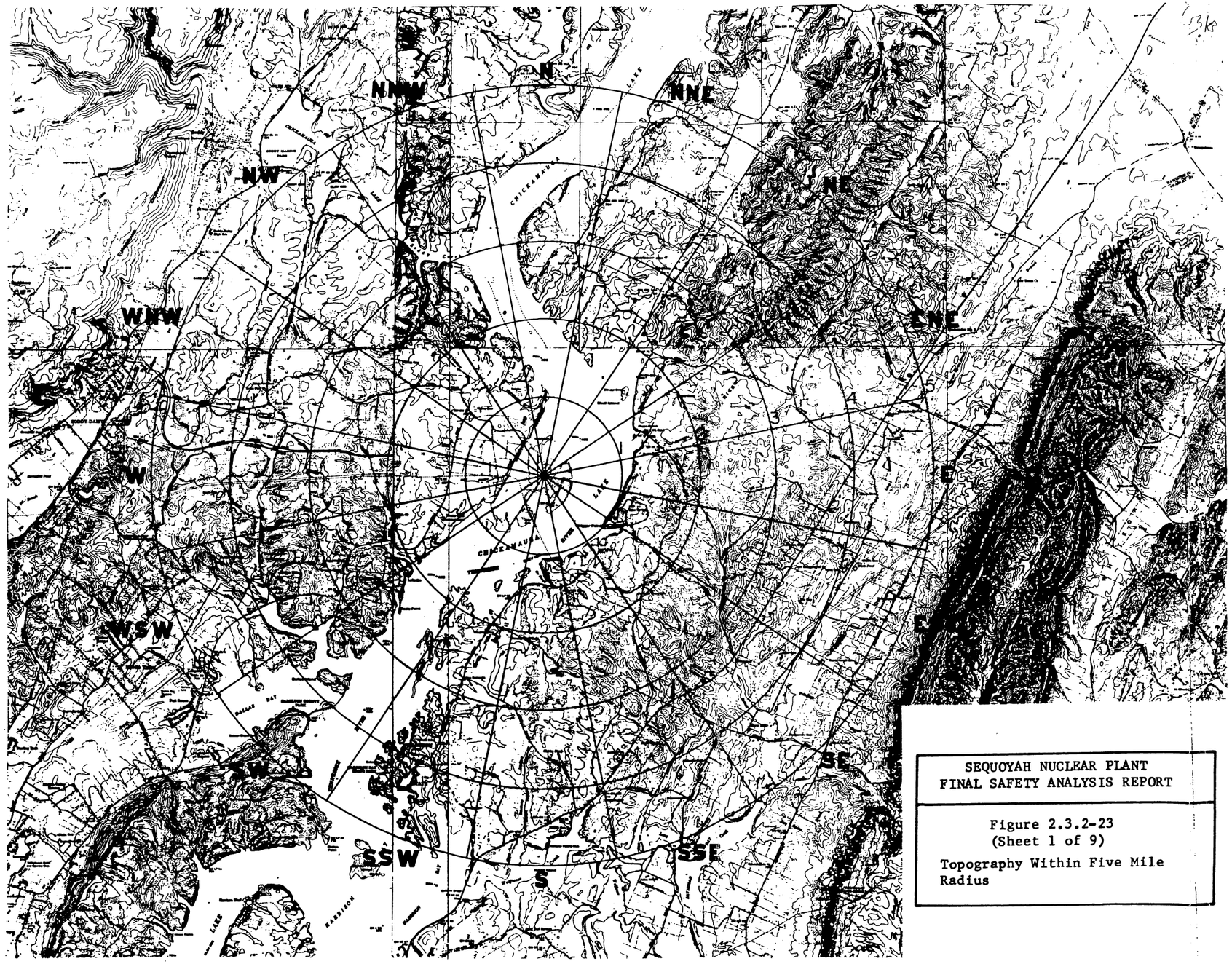

SEQUOYAH NUCLEAR PLANT
FINAL SAFETY ANALYSIS REPORT

Figure 2.3.2-23
(Sheet 1 of 9)

Topography Within Five Mile Radius

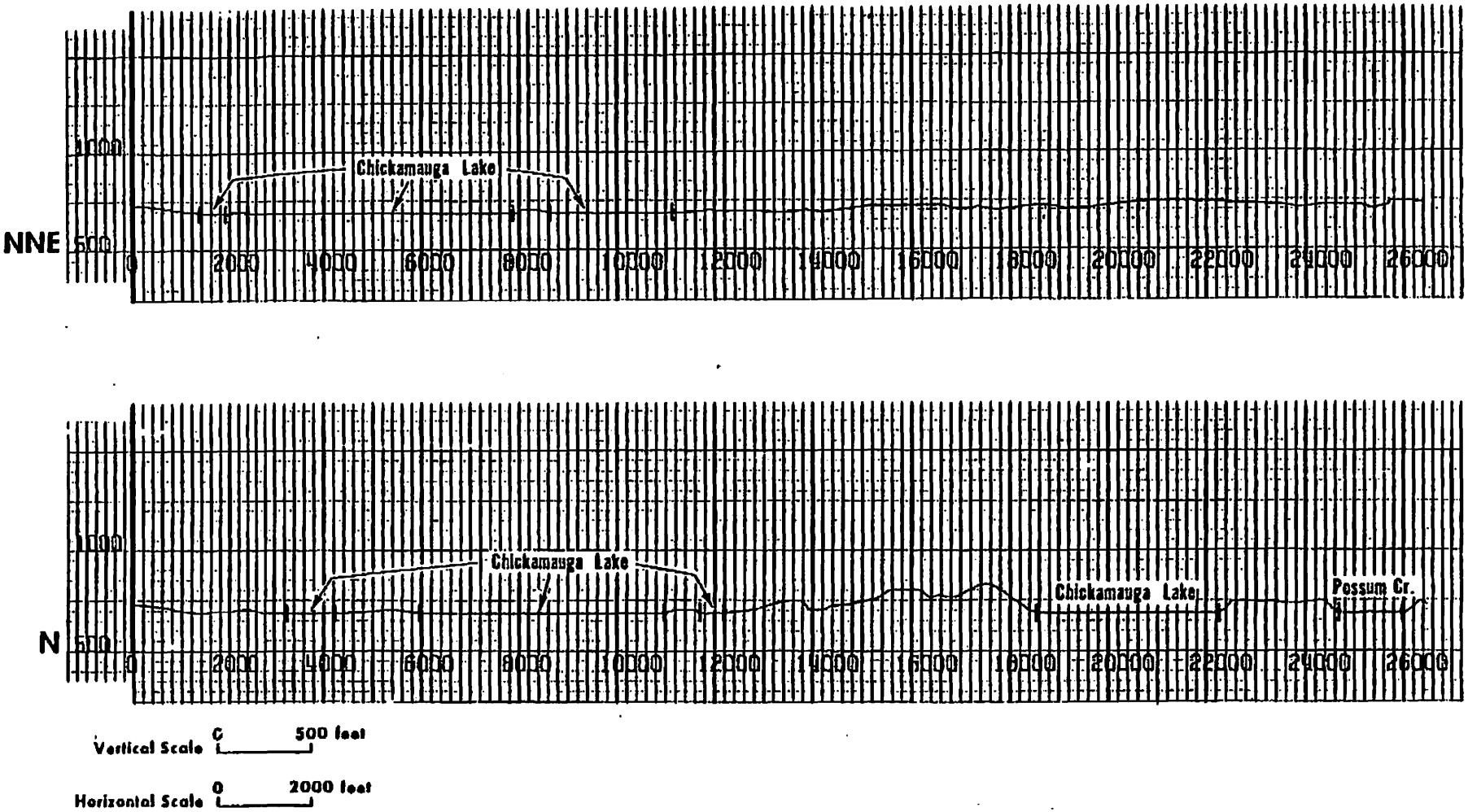

SEQUOYAH NUCLEAR PLANT
FINAL SAFETY ANALYSIS REPORT

Figure 2.3.2-23
(Sheet 2 of 9)

Topography Within Five Mile Radius

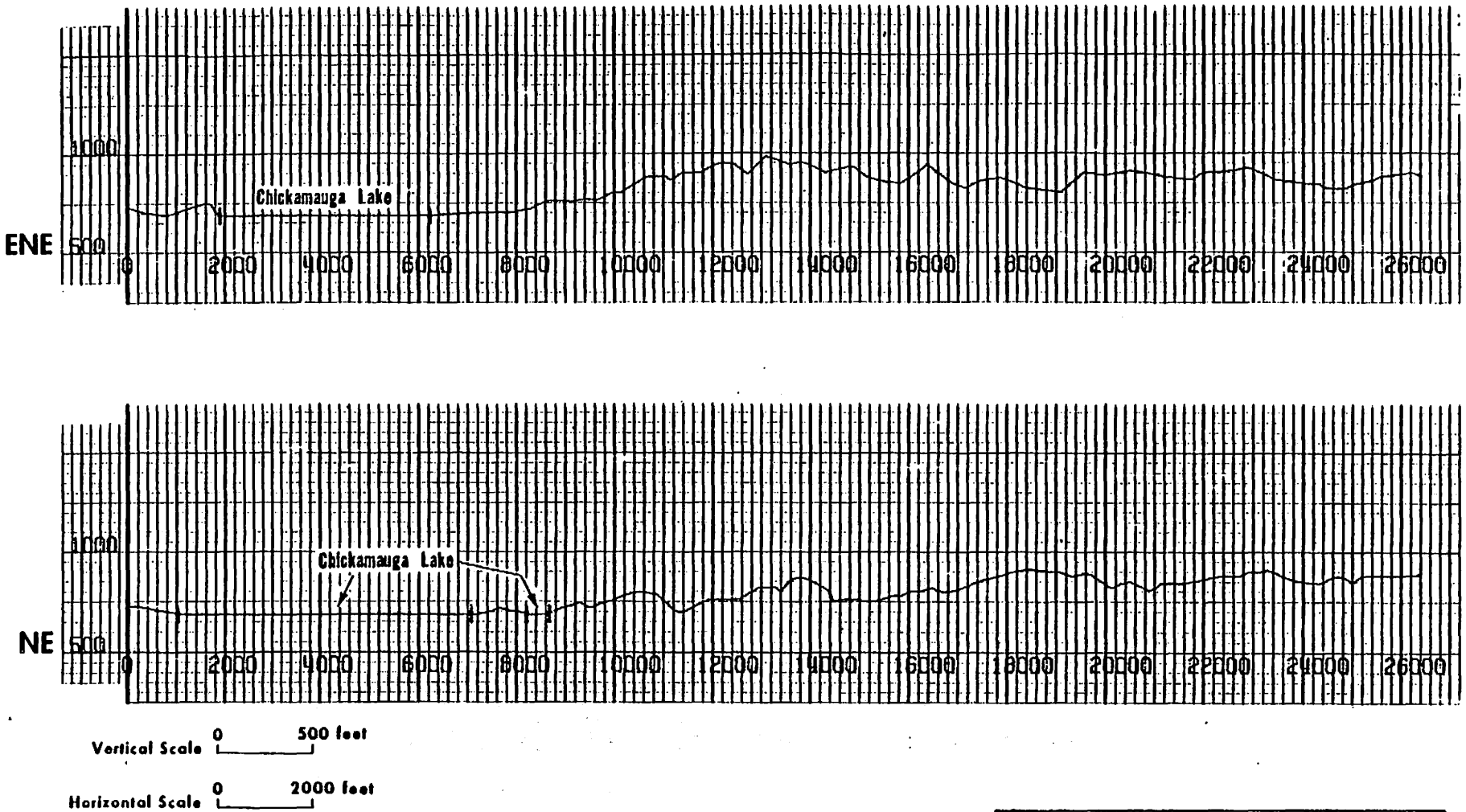

SEQUOYAH NUCLEAR PLANT
FINAL SAFETY ANALYSIS REPORT

Figure 2.3.2-23
(Sheet 3 of 9)

Topography Within Five Mile Radius

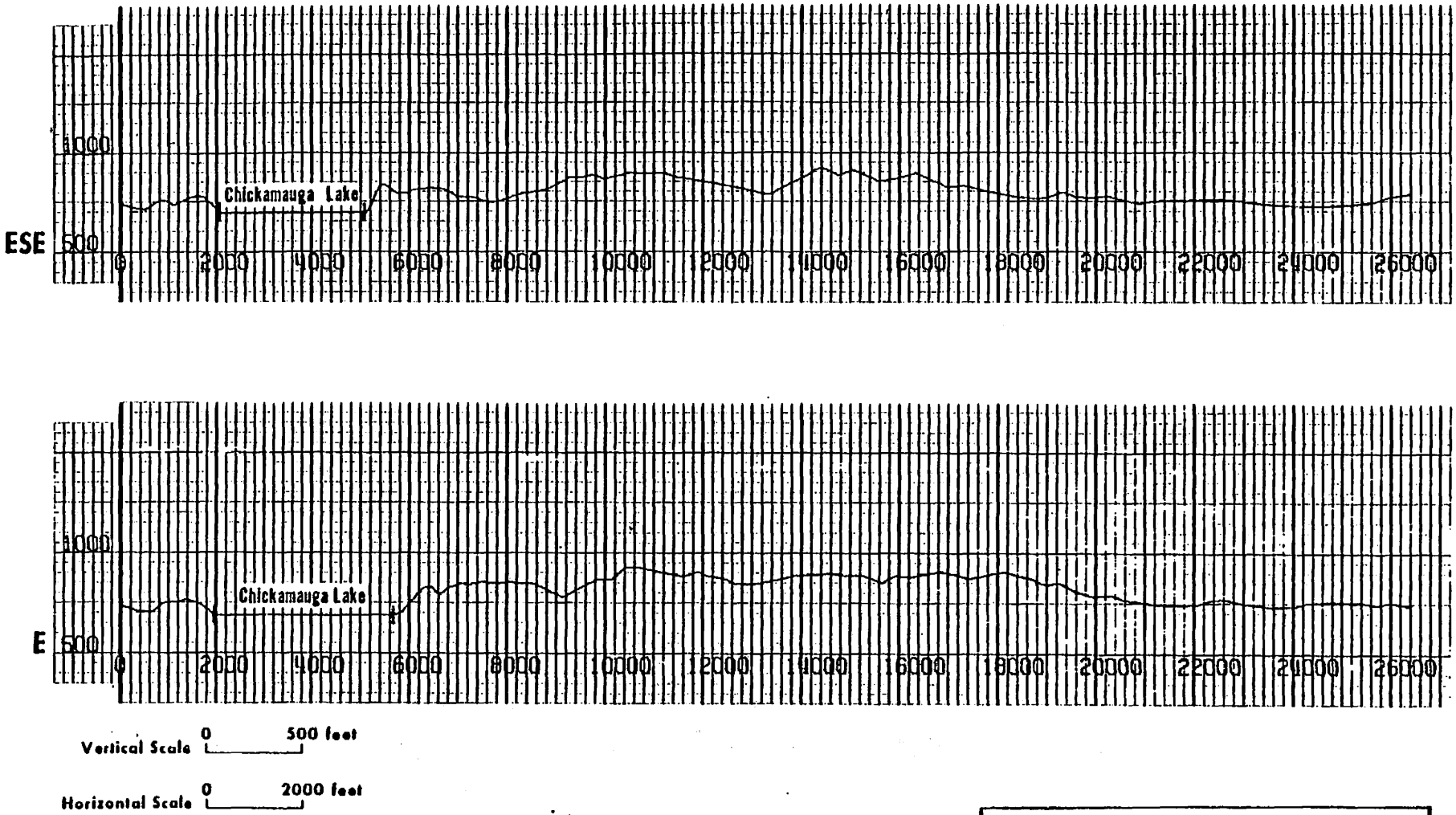

SEQUOYAH NUCLEAR PLANT
FINAL SAFETY ANALYSIS REPORT

Figure 2.3.2-23
(Sheet 4 of 9)

Topography Within Five Mile Radius

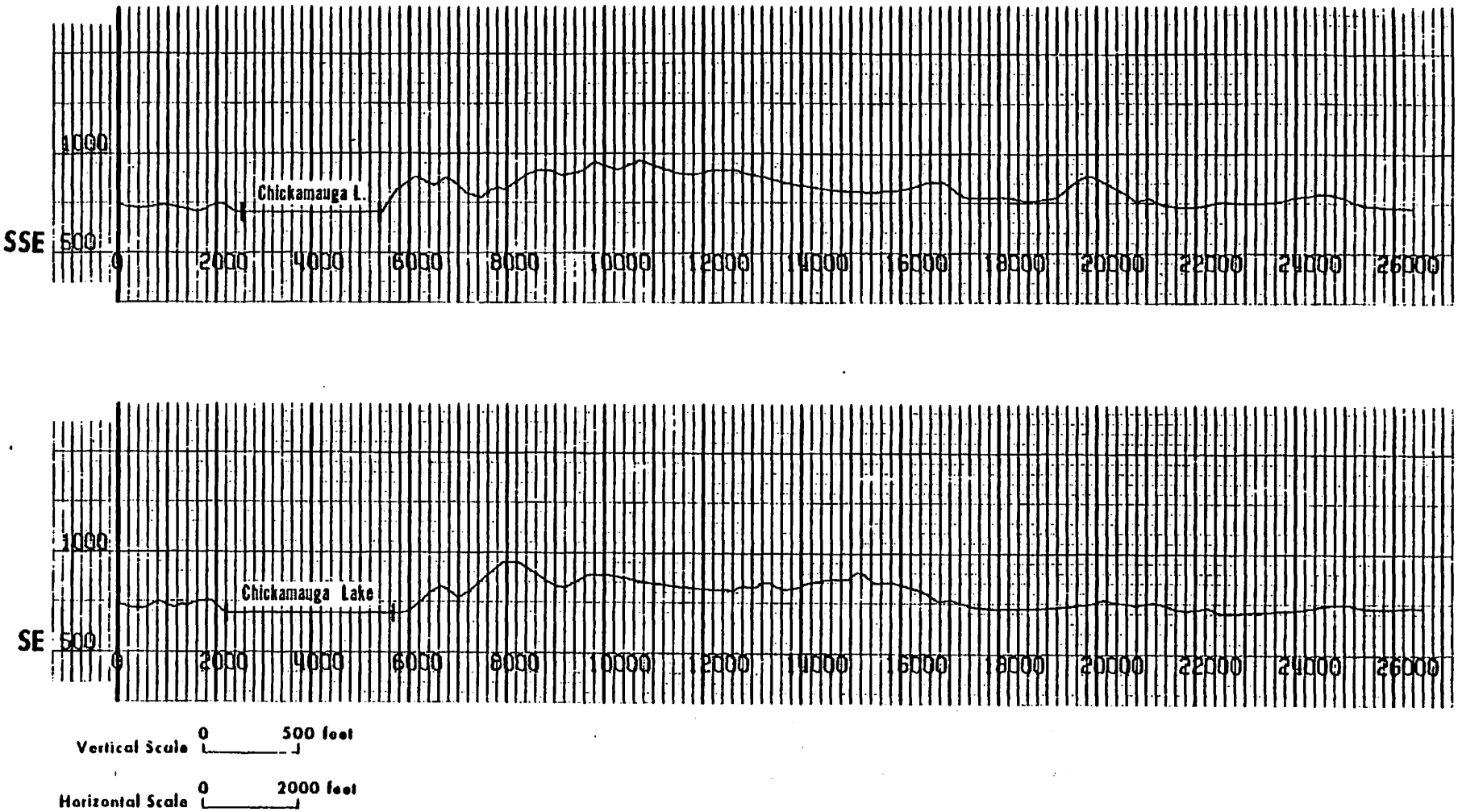

SEQUOYAH NUCLEAR PLANT
FINAL SAFETY ANALYSIS REPORT

Figure 2.3.2-23
(Sheet 5 of 9)

Topography Within Five Mile Radius

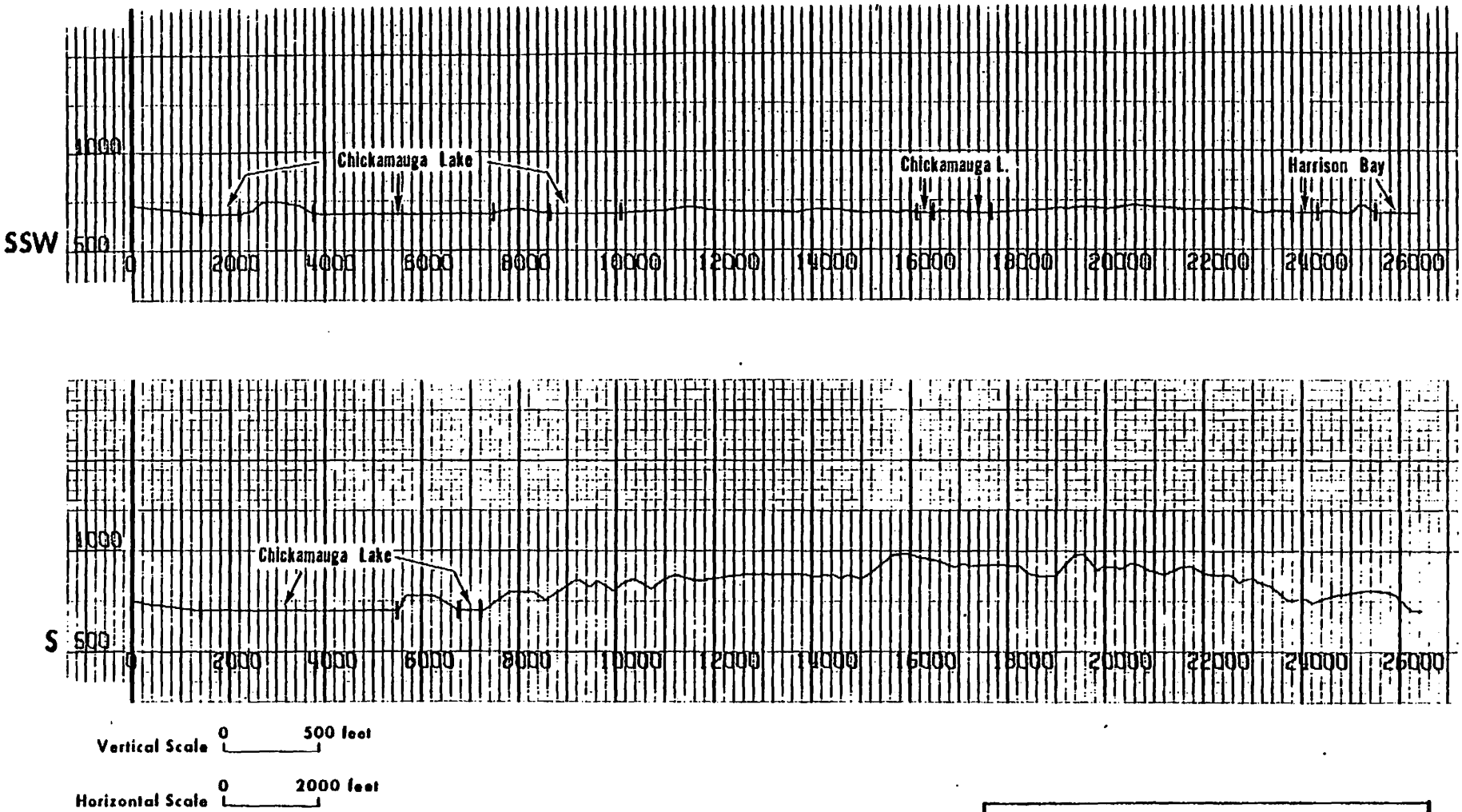

SEQUOYAH NUCLEAR PLANT
FINAL SAFETY ANALYSIS REPORT

Figure 2.3.2-23
(Sheet 6 of 9)

Topography Within Five Mile Radius

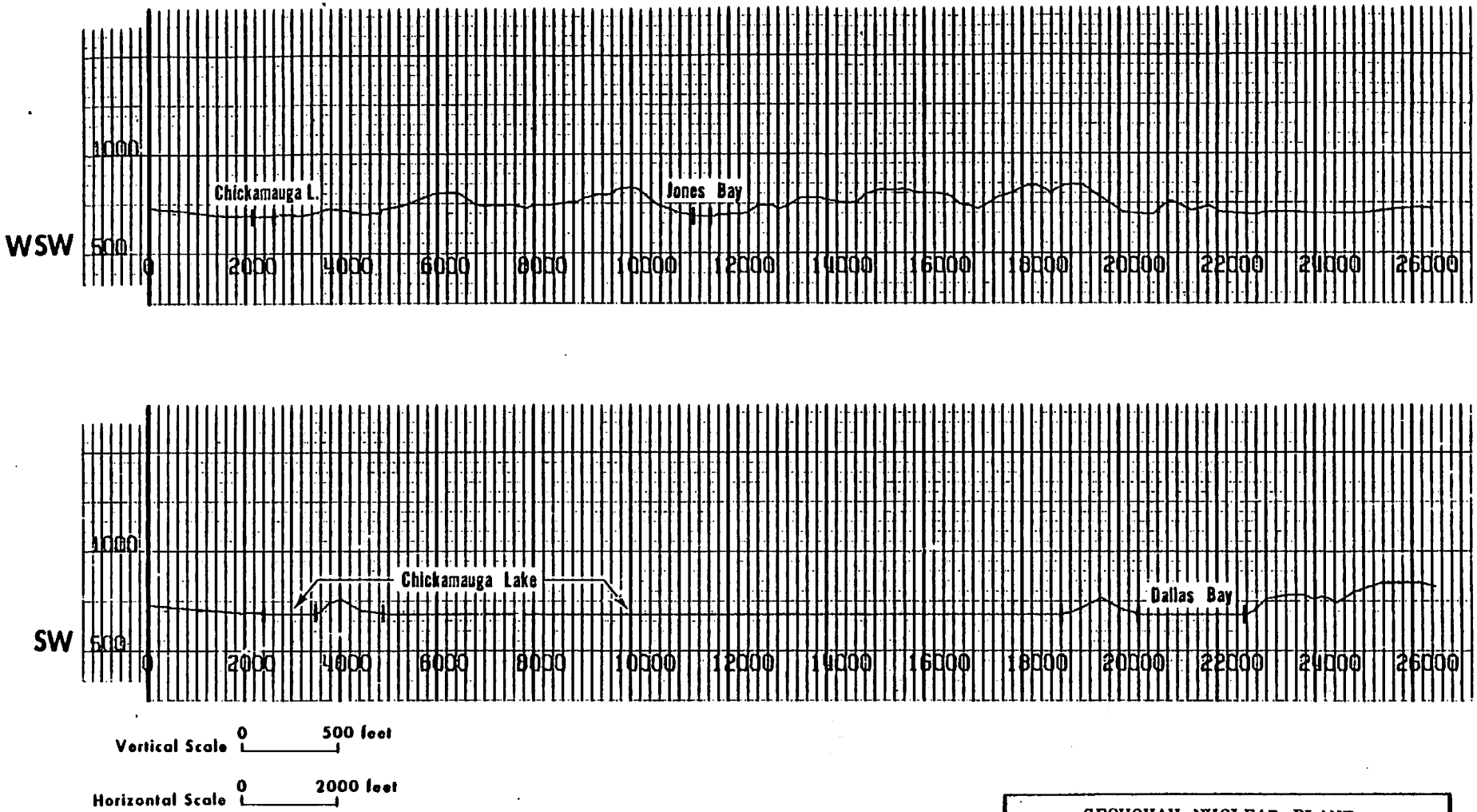

SEQUOYAH NUCLEAR PLANT
FINAL SAFETY ANALYSIS REPORT

Figure 2.3.2-23
(Sheet 7 of 9)

Topography Within Five Mile Radius

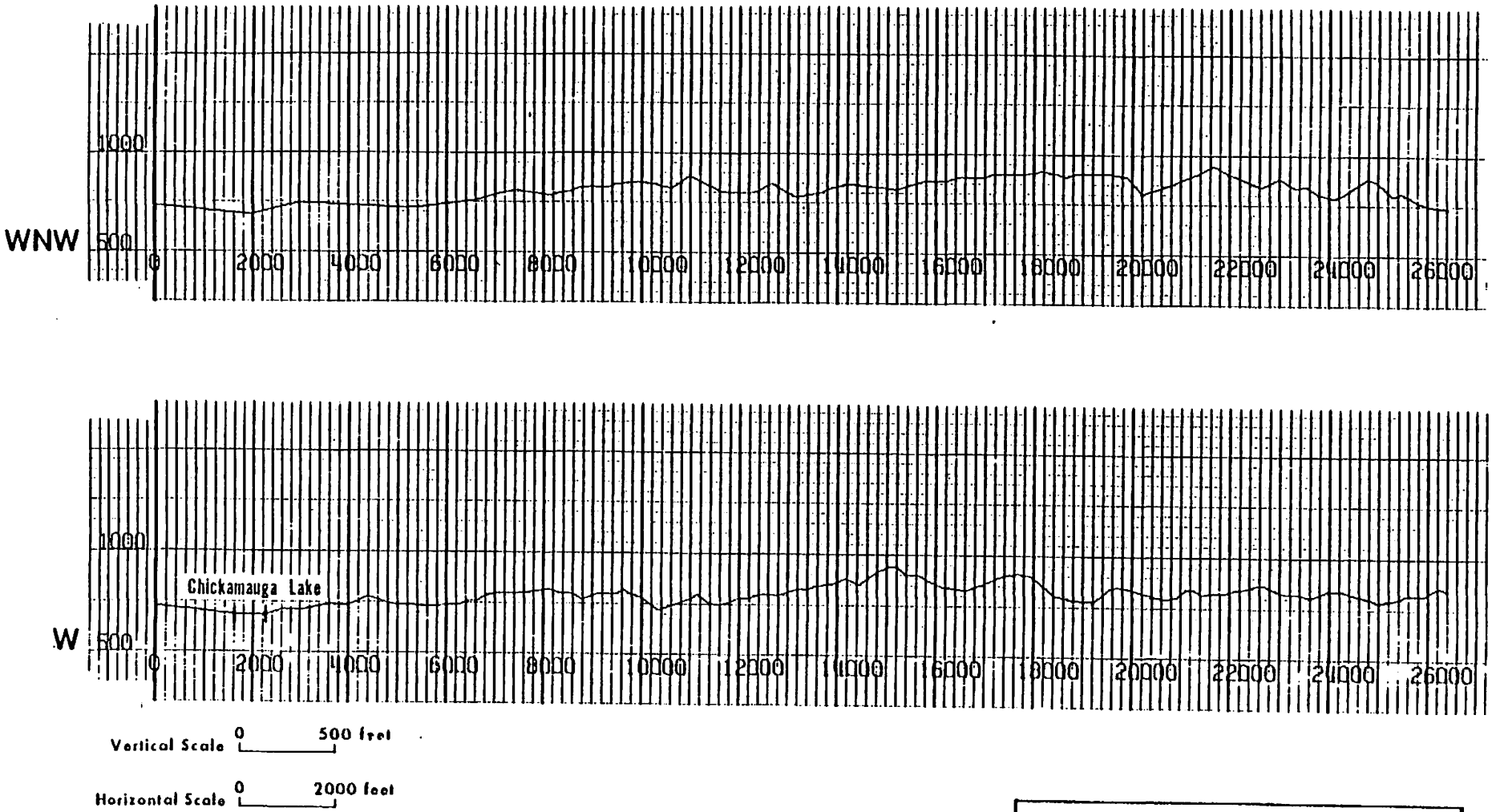

SEQUOYAH NUCLEAR PLANT
FINAL SAFETY ANALYSIS REPORT

Figure 2.3.2-23
(Sheet 8 of 9)
Topography Within Five Mile Radius

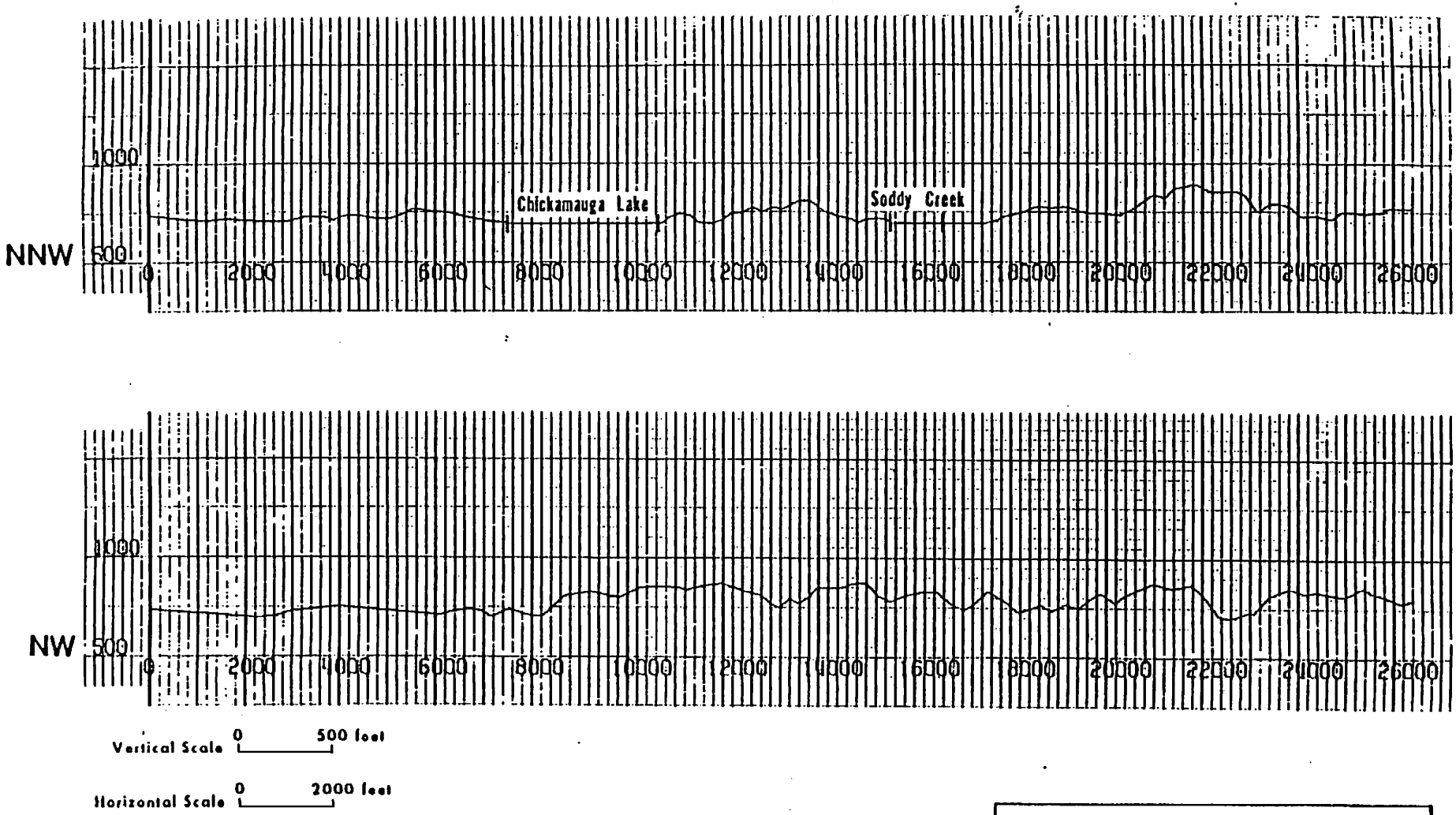

SEQUOYAH NUCLEAR PLANT
FINAL SAFETY ANALYSIS REPORT

Figure 2.3.2-23
(Sheet 9 of 9)

Topography Within Five Mile Radius

2.4 HYDROLOGIC ENGINEERING

2.4.1 Hydrologic Description

2.4.1.1 Site and Facilities

The location of key plant structures and their relationship to the original site topography are shown on Figure 2.1.2-1. The structures which have safety-related equipment and systems are indicated on this figure and are tabulated below, along with the elevation of major exterior accesses.

Structure	Access	Number of Accesses	Elevation
Intake pumping structure	(1) Stairwell entrance	1	705.0
	(2) Access hatches	6	705.0
	(3) Cable tunnel	1	690.0
Auxiliary and control buildings	(1) Railroad access opening	1	706.0
	(2) Doors to turbine building	2	706.0
	(3) Doors to turbine building	2	732.0
	(4) Doors to turbine building	2	685.0
	(5) Personnel lock to SB	1	690.0
	(6) General vent or intake	2	714
	(7) Doors to AEB and MSVV	4	714
Shield building	(1) Personnel lock (watertight)	1	691.0
	(2) Equipment hatch	1	730.0
	(3) Personnel lock	1	732.0
Diesel generator building	(1) Equipment access door	4	722.0
	(2) Personnel access door	1	722.0
	(3) Emergency exit	4	722.0
	(4) Emergency exit	1	740.5
ERCW intake pumping station	(1) Access door	1	725.0
	(2) Trash sluice	1	723.5
	(3) Deck drainage (sealed for flood)	1	720.0

Exterior accesses are also provided to each of the class IE electrical systems manholes and handholes at elevations varying from 700 to 724 feet MSL, depending upon the location of each structure.

The relationship of the plant site to the surrounding area can be seen in Figures 2.1.2-1 and 2.4.1-1. It can be seen from these figures that significant natural drainage features of the site have not been altered. Local surface runoff drains into the Tennessee River.

2.4.1.2 Hydrosphere

The Sequoyah Nuclear Plant (SQN) site comprises approximately 525 acres on a peninsula on the western shore of Chickamauga Lake at Tennessee River Mile (TRM) 484.5. As shown by Figure 2.4.1-1, the site is on high ground with the Tennessee River being the only potential source of flooding.

The Tennessee River above SQN site drains 20,650 square miles. The drainage area at Chickamauga Dam, 13.5 miles downstream, is 20,790 square miles. Three major tributaries--Hiwassee, Little Tennessee, and French Broad Rivers--rise to the east in the rugged Southern Appalachian Highlands. They flow northwestward through the Appalachian Divide which is essentially defined by the North Carolina-Tennessee border to join the Tennessee River which flows southwestward. The Tennessee River and its Clinch and Holston River tributaries flow southwest through the Valley and ridge physiographic province which, while not as rugged as the Southern Highlands, features a number of mountains including the Clinch and Powell Mountain chains. The drainage pattern is shown on Figure 2.1.1-1. About 20 percent of the watershed rises above elevation 3000 with a maximum elevation of 6,684 at Mt. Mitchell, North Carolina. The watershed is about 70 percent forested with much of the mountainous area being 100 percent forested.

The climate of the watershed is humid temperate. Mean annual precipitation for the Tennessee Valley is shown by Figure 2.4.1-2. Above Chickamauga Dam, annual rainfall averages 51 inches and varies from a low of 40 inches at sheltered locations in the mountains to high spots of 85 inches on the southern and eastern divide. Rainfall occurs relatively evenly throughout the year. See Section 2.3 for a discussion of rainfall.

Major flood-producing storms are of two general types; the cool-season, winter type, and the warm-season, hurricane type. Most floods at SQN, however, have been produced by winter-type storms in the months of January through early April.

Watershed snowfall is relatively light, averaging only about 14 inches annually above the plant. The maximum average annual snowfall of 63 inches occurs at Mt. Mitchell, the highest point east of the Mississippi River. The overall snowfall average above the 3,000-foot elevation, however, is only 22 inches annually. Individual snowfalls are normally light, with an average of 13 snowfalls per year. Snowmelt is not a factor in maximum flood determinations.

Chickamauga Dam, 13.5 miles downstream, affects water surface elevations at SQN. Normal full pool elevation is 683.0 feet. At this elevation the reservoir is 58.9 miles long on the Tennessee River and 32 miles long on the Hiwassee River, covering an area of 35,400 acres, with a volume of 628,000 acre-feet. The reservoir has an average width of nearly 1 mile, ranging from 700 feet to 1.7 miles. At SQN, the reservoir is about 3,000 feet wide with depths ranging between 12 feet and 50 feet at normal pool elevation.

The Tennessee River above Chattanooga, Tennessee, is one of the best regulated rivers in the United States. A prime purpose of the TVA water control system is flood control with particular emphasis on protection for Chattanooga, 20 miles downstream from SQN.

There are 20 major reservoirs in the TVA system upstream from the plant, 13 of which have substantial reserved flood detention capacity during the main flood season. Table 2.4.1-1 lists pertinent data for TVA's major dams prior to modifications made by the Dam Safety Program (see Table 2.4.1-5). In addition, there are six major dams owned by the Aluminum Company of America (ALCOA). The ALCOA reservoirs often contribute to flood reduction but were ignored in this analysis because they do not have dependable reserved flood detention capacity. The locations of these dams and the minor dams, Nolichucky and Walters (Waterville Lake), are shown on Figure 2.1.1-1. Table 2.4.1-2 lists pertinent data for the major and minor ALCOA dams and Walters Dam.

The flood detention capacity reserved in the TVA system varies seasonally, with the greatest amounts during the flood season. Figure 2.4.1-3, containing 14 sheets, shows tributary and main river reservoir seasonal operating guides for those reservoirs having major influence on SQN flood

flows. Table 2.4.1-3 shows the flood control reservations at the multiple-purpose projects above SQN at the beginning and end of the winter flood season and in the summer. Assured system detention capacity above the plant varies from 5.6 inches on January 1 to 4.5 inches on March 15, decreasing to 1.0 inch during the summer and fall. Actual detention capacity may exceed these amounts, depending upon inflows and power demands.

Flood control above SQN is provided largely by 11 tributary reservoirs. Tellico Dam is counted as a tributary reservoir because it is located on the Little Tennessee River, although, because of canal connection with Fort Loudoun Dam, it also functions as a main river dam. On March 15, near the end of the flood season, these provide a minimum of 4,436,000 acre-feet of detention capacity, equivalent to 5.8 inches on the 14,476 square-mile area they control. This is 90 percent of the total available above Chickamauga Reservoir. The two main river reservoirs, Fort Loudoun and Watts Bar, provide 490,000 acre-feet, equivalent to 1.5 inches of detention capacity on the remaining area above the plant.

Daily flow volumes at the plant, for all practical purposes, are represented by discharges from Chickamauga Dam with drainage area of 20,790 square miles, only 140 square miles more than at the plant. Momentary flows at the nuclear plant may vary considerably from daily averages, depending upon turbine operations at Watts Bar Dam upstream and Chickamauga Dam downstream. There may be periods of several hours when there are no releases from either or both Watts Bar and Chickamauga Dams. Rapid turbine shutdown at Chickamauga may sometimes cause periods of upstream flow in Chickamauga Reservoir.

Based upon discharge records since closure of Chickamauga Dam in 1940, the average daily streamflow at the plant is 32,600 cfs. The maximum daily discharge was 223,200 cfs on May 8, 1984. Except for two special operations on March 30 and 31, 1968, when discharge was zero to control milfoil, the minimum daily discharge was 700 cfs on November 1, 1953. Flow data for water years 1951-1972 indicate an average rate of about 27,600 cfs during the summer months (May-October) and about 38,500 cfs during the winter months (November-April). Flow durations based upon Chickamauga Dam discharge records for the period 1951-1972 are tabulated below.

Average Daily Discharge, cfs	Percent of Time Equaled or Exceeded
5,000	99.6
10,000	97.7
15,000	93.3
20,000	84.0
25,000	69.3
30,000	46.8
35,000	31.7

Channel velocities at SQN average about 0.6 fps under normal winter conditions. Because of lower flows and higher reservoir elevations in the summer months, channel velocities average about 0.3 fps.

As listed on Table 2.4.1-4, there are 23 surface water users within the 98.6-mile reach of the Tennessee River between Dayton, TN and Stevenson, AL. These include fifteen industrial water supplies and eight public water supplies.

The industrial users exclusive of SQN withdraw about 497 million gallons per day from the Tennessee River. Most of this water is returned to the river after use with varying degrees of contamination.

The public surface water supply intake (Savannah Valley Utility District), originally located across Chickamauga Reservoir from the plant site at TRM 483.6, has been removed. Savannah Valley Utility District has been converted to a ground water supply. The nearest public downstream intake is the East Side Utility (formerly referred to as U.S. Army, Volunteer Army Ammunition Plant). This intake is located at TRM 473.0.

Groundwater resources in the immediate SQN site are described in Section 2.4.13.

2.4.1.3 TVA Dam Safety Program

Most of the dams upstream from SQN were designed and built before the hydrometerological approach to spillway design had gained its current level of acceptance. Spillway design capacity was generally less than would be provided today. The original FSAR analyses were based on the existing dam system before dam safety modifications were made and included failure of some upstream dams from overtopping.

In 1982, TVA officially began a safety review of its dams. The TVA Dam Safety Program was designed to be consistent with Federal Guidelines for Dam Safety and similar efforts by other Federal agencies. Technical studies and engineering analyses were conducted and physical modifications implemented to ensure the hydrologic and seismic integrity of the TVA dams and demonstrate that TVA's dams can be operated in accordance with Federal Emergency Management Agency (FEMA) guidelines. Table 2.4.1-5 provides the status of TVA Dam Safety hydrologic modifications as of 1998. These modifications enable these projects to safely pass the probable maximum flood. The remaining hydrologic modifications planned for Bear Creek Dam and Chickamauga Dam will not affect SQN in any manner which might invalidate the reanalysis described below.

In 1997-98, TVA reanalyzed the nuclear plant design basis flood events. The purpose of the reanalysis was to evaluate the effects of the hydrologic dam safety modifications on the flood elevations and response times in the SQN FSAR and to confirm the adequacy of the plant flood plans. The following methods and assumptions were applied to the reanalysis:

1. The computer programs and modeling methods were the same as previously used and documented in the FSAR.

2. Probable maximum precipitation, time distribution of precipitation, precipitation losses and reservoir operating procedures were unchanged from the original analysis.

3. The original stability analyses and postulated seismic dam failure assumptions were conservatively assumed to occur in the same manner and in combination with the same previously postulated rainfall events. No credit was taken for the 1988 post-tensioning of Fontana and Melton Hill Dams to prevent seismic failure. Nor was any credit taken for Dam Safety seismic evaluations of Norris, Cherokee, Douglas, Fort Loudon, Tellico, Hiwassee, Apalachia, and Blue Ridge Dams which demonstrated their structural integrity for a seismic event with a return period of approximately 10,000 years.

4. The planned modification of Chickamauga Dam (armoring the embankment to permit overtopping) was conservatively assumed to have been implemented for the purpose of calculating flood effects. Under present existing conditions, the Chickamauga embankment would be severely eroded in the overtopping PMF event and the maximum flood elevation at SQN would be lower than that with the planned modification.

2.4.2 Floods

2.4.2.1 Flood History (Historical)

The nearest location with extensive formal flood records is 20 miles downstream at Chattanooga, Tennessee, where continuous records are available since 1874. Knowledge about significant floods extends back to 1826, based upon newspaper and historical reports. Flood flows and stages at Chattanooga have been altered by TVA's reservoir system beginning with the closure of Norris Dam in 1936 and reaching essentially the present level of control in 1952 with closure of Boone Dam, the last major dam with reserved flood detention capacity constructed above Chattanooga. Tellico Dam provides additional reserved flood detention capacity; however, the percentage increase in total detention capacity above the Watts Bar site is small. Thus, for practical purposes, flood records for the period 1952 to date can be considered representative of prevailing conditions. Figure 2.4.2-1 shows the known flood experience at Chattanooga in diagram form. The maximum known flood under natural conditions occurred in 1867. This flood reached elevation 690.5 at SQN. The maximum flood under present-day regulation reached elevation 687.9 at the site on May 9, 1984.

The following table lists the highest floods at SQN:

Date	Elevation, Feet	Discharge, cfs
Before Regulation		
March 11, 1867	690.5	450,000
March 1, 1875	686.2	405,000
April 3, 1886	684.5	385,000
March 7, 1917	680.0	335,000
April 5, 1920	676.5	270,000
Since Present Regulation		
February 3, 1957	683.7	180,000
March 13, 1963	684.8	205,000
March 18, 1973	687.0	219,000
May 9, 1984	687.9	250,000

2.4.2.2 Flood Design Considerations

TVA has planned the SQN project to conform with regulatory position 2 of Regulatory Guide 1.59.

The types of events evaluated to determine the worst potential flood included (1) Probable Maximum Precipitation (PMP) on the total watershed and critical subwatersheds, including seasonal variations and potential consequent dam failures and (2) dam failures in a postulated Safe Shutdown Earthquake (SSE) or one-half SSE with guide specified concurrent flood conditions.

The computed maximum stillwater flood level in the reservoir at the plant site from any cause is elevation 719.6. Maximum level including wave height is 722.4. This elevation would result from the probable maximum precipitation critically centered on the watershed and a 45-mile-per-hour overwater wind, from the most critical direction coincident with the peak of the resulting flood.

Other rainfall floods will also exceed plant grade, elevation 705, and will necessitate plant shutdown. Flood warning criteria and forecasting techniques have been developed to assure that there will always be adequate time to shut the plant down and be ready for floodwaters above plant grade and are described in Subsections 2.4.10 and 2.4.14, and Appendix 2.4A.

Seismic and concurrent flood events could create flood levels which would exceed plant grade. The maximum elevation reached in such an event is elevation 707.9, 2.9 feet above plant grade and 11.7 feet below the controlling event probable maximum flood (PMF), excluding wind-wave considerations. In all such events there is adequate time for safe plant shutdown after the seismic event and before plant grade would be crossed. The emergency protective measures and warning criteria are described in Subsections 2.4.10 and 2.4.14, and Appendix 2.4A.

Most safety-related building accesses are located at elevation 706 or above. The accesses below elevation 706 are within the powerhouse and will not be exposed to floodwater until plant grade is exceeded. Therefore, the structures are protected from flooding prior to the end of the shutdown period.

Drainage to the Tennessee River has been provided to accommodate runoff from the probable maximum precipitation on the local area of the plant site.

Specific analysis of Tennessee River flood levels resulting from oceanfront surges and tsunamis is not required because of the inland location of the plant.

Snowmelt and ice jam considerations are also unnecessary because of the temperate zone location of the plant. Flood waves from landslides into upstream reservoirs required no specific analysis, in part because of the absence of major elevation relief in nearby upstream reservoirs and because the prevailing thin soils offer small slide volume potential compared to the available detention space in reservoirs.

All safety-related facilities, systems, and equipment are housed in structures which provide protection from flooding for all flood conditions up to plant grade at elevation 705.

For the condition where flooding exceeds plant grade, as described in Subsections 2.4.3 and 2.4.4, all equipment required to maintain the plant safely during the flood, and for 100 days after the beginning of the flood, is either designed to operate submerged, located above the maximum flood level, or otherwise protected.

Safety-related facilities, systems, and equipment located in the containment structure are protected from flooding by the shield building. All accesses and penetrations below the maximum flood level in the shield building are designed and constructed as essentially water tight elements.

The turbine, control, and auxiliary building will be allowed to flood.

Wind wave run-up during the PMF at the diesel generator building reaches elevation 721.8 which is 0.2 feet below the operating floor. Consequently, wind wave run-up will not impair the safety function of systems in the diesel generator building.

The accesses and penetrations below this elevation in the diesel generator building are designed and constructed to minimize leakage into the buildings. Redundant sump pumps are provided within the building to remove minor leakage. Protective measures are taken to ensure that all safety-related systems and equipment in the Emergency Raw Cooling Water (ERCW) pump station will remain functional when subjected to the maximum flood level.

Class IE electrical cables, located below the Probable Maximum Flood (PMF) plus wind-wave activity and required in a flood, are designed for submerged operation.

Structures housing safety-related facilities, systems, and equipment are protected from flooding during a local PMF by the slope of the plant yard. The yard is graded so that the surface runoff will be carried to Chickamauga Reservoir without exceeding the elevation of the external accesses given in Paragraph 2.4.1.1 except those at the intake pumping station whose pumps can operate submerged.

2.4.3 Probable Maximum Flood (PMF) on Streams and Rivers

The guidance of Appendix A of Regulatory Guide 1.59 was followed in determining the PMF. Plant surface drainage was evaluated and found capable of passing the local probable maximum storm without reaching or exceeding the critical floor elevation 706, as further described in 2.4.3.5.

Evaluation of seasonal and areal variations of probable maximum storms showed that the probable maximum Tennessee River flood level at the plant would be caused by a sequence of storms occurring in March centered in the mountains, east of the plant. The flood crest at the plant would be augmented by the failure of the west saddle dike at Watts Bar Dam upstream. The estimated maximum discharge is 1,236,000 cfs. The probable maximum elevation at the plant is 719.6, excluding any wind-wave effects, and excluding any lower flood level due to failure of Chickamauga Dam downstream.

2.4.3.1 Probable Maximum Precipitation

Probable maximum precipitation (PMP) for the Tennessee River watershed above SQN has been defined for TVA by the Hydrometeorological Branch of the National Weather Service in Hydrometeorological Report No. 41 Reference [1]. Two basic storm positions were evaluated. One would produce maximum rainfall over the total watershed. The other would produce maximum rains in the part of the basin downstream from major TVA tributary reservoirs, hereafter referred to as the 7,980-square-mile storm. Snowmelt is not a factor in generating maximum floods at the plant site.

Controlling PMP depths for 21,400-square-mile and 7,980-square-mile areas are tabulated below. These storms would occur in March. Depths for other months would be less.

	Depth, Inches			
	72-Hour	Main Storm		
Sq. Miles	Antecedent Storm	6-Hour	24-Hour	72-Hour
21,400	6.7	5.03	11.18	16.78
7,980	8.1	7.02	14.04	20.36

Two possible isohyetal patterns producing the total area depths are presented in Report No. 41. The one critical to this study is the "downstream pattern" shown in Figure 2.4.3-1. The isohyetal pattern for the 7,980-square-mile storm is shown in Figure 2.4.3-2. The pattern is not orographically fixed and can be moved parallel to the long axis northeast and southwest along the Valley.

A 72-hour storm three days antecedent to the main storm was assumed to occur in all PMP situations with storm depths equivalent to 40 percent of the main storm.

Potential storm amounts differing by seasons were analyzed in sufficient number to make certain that the March storms would be controlling. Enough centerings were investigated to assure that a most critical position was used.

Storms producing PMP above upstream tributary dams, whose failure has the potential to create maximum flood levels, were evaluated in the original FSAR analysis. Dam safety modifications at upstream tributary dams have eliminated these potential failures and subsequent plant site flood levels.

A standard time distribution pattern was adopted for all storms based upon major observed storms transposable to the Tennessee Valley and in conformance with the usual practice of Federal agencies. The adopted distribution is shown on Figure 2.4.3-3.

The critical probable maximum storm was determined to be a total basin storm with downstream orographically fixed pattern (Figure 2.4.3-1) which would follow an antecedent storm commencing on March 15. Translation of the PMP from Report No. 41 to the basin results in an antecedent storm producing an average precipitation of 6.4 inches in three days, followed by a three-day dry period, and then by the main storm producing an average precipitation of 16.5 inches in three days. Figure 2.4.3-4 is an isohyetal map of the maximum three-day PMP. Basin rainfall depths are given in Table 2.4.3-1.

To evaluate the local plant drainage system for a PMP event, Hydrometeorological Report No. 56 was used to calculate a 1-hr storm totaling 16.21 inches. Three different temporal distributions were applied to the model, with peak intensity of 2.81 inches/5-min = 33.72 in/hr shifted between early, middle, and late occurrence. Depths for each 5-minute increment of the controlling late peak distribution were 0.68, 0.78, 0.87, 0.97, 0.97, 1.17, 1.26, 1.36, 1.55, 2.81, 2.04, and 1.75. Rainfall on plant building roofs was assumed to discharge to the ground surface.

2.4.3.2 Precipitation Losses

Precipitation losses in the probable maximum storm are estimated with multivariable relationships used in the day-to-day operation of the TVA system. These relationships, developed from a study of storm and flood records, relate the amount of precipitation excess (and hence the precipitation loss) to the week of the year, an antecedent precipitation index (API), and geographic location. The relationships are such that the loss subtraction from rainfall to compute precipitation excess is greatest at the start of the storm and decreases to no subtraction when the storm rainfall totals from 7 to 16 inches. Precipitation losses become zero in the late part of extreme storms.

For this probable maximum flood analysis, median moisture conditions as determined from past records were used to determine the API at the start of the storm sequence. The antecedent storm is so large, however, that the precipitation excess computed for the later main storm is not sensitive to variations in adopted initial moisture conditions. The precipitation loss in the critical probable maximum storm totals 4.13 inches, 2.30 inches in the antecedent storm amounting to 36 percent of the 3-day 6.44-inch rainfall, and 1.83 inches in the main storm amounting to 11 percent of the 3-day, 16.46 inch rainfall. Table 2.4.3-1 displays the API, rain, and precipitation excess for each of the 45 subwatersheds of the hydrologic model for the SQN probable maximum flood.

No precipitation loss was applied in the probable maximum storm on the local area used to test the adequacy of the site drainage system and roofs of safety-related structures. Runoff was made equal to rainfall.

2.4.3.3 Runoff Model

The runoff model used to determine Tennessee River flood hydrographs at SQN is divided into 45 unit areas. Unit hydrographs are used to compute flows from these areas. The unit area flows are combined with appropriate time sequencing or channel routing procedures to compute inflows into the most upstream reservoirs, which in turn are routed through the reservoirs, using standard techniques. Resulting outflows are combined with additional local inflows and carried downstream using appropriate time sequencing or routing procedures, including unsteady flow routing. Figure 2.4.3-5 shows unit areas of the watershed upstream from SQN.

The runoff model used in this updated FSAR differs from that used previously because of refinements made in some elements of the model during PMF studies for other nuclear plants and those made from information gained from the 1973 flood, the largest that has occurred during present reservoir conditions.

Changes are identified when appropriate in the text. They include both additional and revised unit hydrographs and additional and revised unsteady flow stream course models.

Unit hydrographs were developed for each unit area from maximum flood hydrographs either recorded at stream gauging stations or estimated from reservoir headwater elevation, inflow, and discharge data. The number of unit areas has been increased from 34 used previously to 45. The differences include:

1. Use of the model developed for the Phipps Bend study which combined the two unit areas for Watauga River (Sugar Grove and Watauga local) into one unit area and divided the Cherokee to Gate City unit area into two unit areas (Surgoinsville local and Cherokee local below Surgoinsville);

2. Use of the model developed for the Clinch River Breeder Reactor which increased the unit areas on the Clinch River from 3 to 11 and the Watts Bar local from 1 to 2;

3. Changes to add an unsteady flow model for the Fort Loudoun-Tellico Dam complex which included dividing the lower Little Tennessee River unit area into two unit areas (Fontana to Chilhowee and Chilhowee to Tellico), and the Fort Loudoun local unit area into three unit areas (French Broad River local, Holston River local and Fort Loudoun local); and

4. Combining the two unit areas above Ocoee No. 1 (Ocoee No. 1 and Ocoee No. 3) into one unit area (Ocoee No. 1 to Blue Ridge).

In addition, eight of the unit graphs have been revised. Figure 2.4.3-6, which contains 11 sheets, shows the unit hydrographs. Table 2.4.3-2 contains essential dimension data for each unit hydrograph and identification of those hydrographs which are new or revised.
Tributary reservoir routings, except for Tellico, were made using the Goodrich semigraphical method and flat pool storage conditions. Main river reservoir and Tellico routings were made using unsteady flow techniques. This differs from the previous submission in that:

1. An unsteady flow model has been added for the Fort Loudoun-Tellico complex, and

2. The Chickamauga unsteady flow model has been revised using the 1973 flood data and results from the HEC-2 backwater computer program.

In the original study, the failure wave hydrograph of the mouth of the Hiwassee River was approximated for the postulated failures of Hiwassee, Apalachia and Blue Ridge dams as described in section 2.4.4.2.1. In the 1998 reassessment, an unsteady flow model developed during the dam safety studies was used as an adjunct to route the Hiwassee, Apalachia and Blue Ridge failures in the one half SSE. The model was verified by comparing model elevations in a state of steady flow with elevations computed by the standard-step method. This was done for steady flows ranging from 25,000 cfs to 1,000,000 cfs.

Unsteady flow routings were computer-solved with a mathematical model based on the equations of unsteady flow, [3]. Boundary conditions prescribed were inflow hydrographs at the upstream boundary, local inflow, and headwater discharge relationships at the downstream boundary based upon normal operating rules, or based upon rated curves when geometry controlled.

The unsteady flow mathematical model for the 49.9-mile-long Fort Loudoun Reservoir was divided into twenty-four 2.08-mile reaches. The model was verified at three gauged points within Fort Loudoun Reservoir using 1963 and 1973 flood data. The unsteady flow model was extended upstream on the French Broad and Holston Rivers to Douglas and Cherokee Dams, respectively. The French Broad and Holston River unsteady flow models were verified at one gaged point each at mile 7.4 and 5.5, respectively, using 1963 and 1973 flood data.

The Little Tennessee River was modeled from Tellico Dam, mile 0.3, through Tellico Reservoir to Chilhowee Dam at mile 33.6, and upstream to Fontana Dam at mile 61.0. The model for Tellico Reservoir to Chilhowee Dam was tested for adequacy by comparing its results with steady-state profiles at 1,000,000 and 2,000,000 cfs computed by the standard-step method. Minor decreases in conveyance in the unsteady flow model yielded good agreement. The average conveyance correction found necessary in the reach below Chilhowee Dam to make the unsteady flow model agree with the standard-step method was also used in the river reach from Chilhowee to Fontana Dam.

The Fort Loudoun and Tellico unsteady flow models were joined by a canal unsteady flow model. The canal was modeled with five equally-spaced cross Sections at 525-foot intervals for the 2,100-foot-long canal.

The unsteady flow routing model for the 72.4-mile-long Watts Bar Reservoir was divided into thirty-four 2.13-mile reaches. The model was verified at two gauged points within the reservoir using 1963 flood data.

The unsteady flow mathematical model for the total 58.9-mile-long Chickamauga Reservoir was divided into twenty-eight 2.1-mile reaches providing twenty-nine equally-spaced grid points. The grid point at mile 483.62 is nearest to the plant, mile 484.5. The unsteady flow model was verified at four gauged points within Chickamauga Reservoir using 1973 flood data. This differs from the previous submission in that the 1973 flood was added for verification, replacing the 1963 flood. The 1973 flood occurred during preparation of the FSAR and therefore, was not available for verification. The 1973 flood is the largest which has occurred since closure of South Holston Dam in 1950. Comparisons between observed and computed stages in Chickamauga Reservoir are shown in Figure 2.4.3-7.

It is impossible to verify the models with actual data approaching the magnitude of the probable maximum flood. The best remaining alternative was to compare the model elevations in a state of steady flow with elevations computed by the standard step method. This was done for steady flows ranging up to 1,500,000 cfs. An example shown by the rating curve of Figure 2.4.3-8 shows the good agreement.

The watershed runoff model was verified by using it to reproduce the March 1963 and March 1973 floods; the largest recorded since closure of South Holston Dam. This differs from the previous submission in that the 1973 flood was added for verification, replacing the 1957 flood. Observed volumes of precipitation excess were used in verification. Comparisons between observed and computed outflows from Watts Bar and Chickamauga Dams for the 1973 and 1963 floods are shown in Figures 2.4.3-9 and 2.4.3-10, respectively.

From a study of the basic units of the predicting system and its response to alterations in various basic elements, it is concluded that the model serves adequately and conservatively to determine maximum flood levels.

2.4.3.4 Probable Maximum Flood Flow

The probable maximum flood discharge at SQN was determined to be 1,236,000 cfs. The hydrograph of this flood is shown in Figure 2.4.3-11. This flood would result from the total basin downstream orographically fixed storm pattern, Figure 2.4.3-4, more completely described in Section 2.4.3.1. The dam safety modification to Fort Loudon, Tellico, and Watts Bar Dams enable them to safely pass the PMF. The west saddle dike at Watts Bar Dam would be overtopped and breached. Chickamauga would be overtopped but was assumed not to fail as a failure would reduce the flood level at the site.

In the original FSAR analysis, the flood would overtop and breach the earth embarkments of Fort Loudon, Tellico, and Watts Bar Dams upstream.

A second candidate storm is the 7,980-square-mile storm centered at Bulls Gap, Tennessee, 50 miles northeast of Knoxville, shown in Figure 2.4.3-2. The flood from this storm would overtop and breach the west saddle dike at Watts Bar Dam. The flood from the 7,980-square-mile storm is the less critical storm and would produce a probable maximum discharge less than from the total basin storm.

The previous PMF evaluations considered candidate situations involving upstream tributary dams Douglas and Watauga. These two situations were shown at that time to be non-governing. Dam safety modifications have since eliminated the potential failures of these dams. Therefore, these two candidate situations have been eliminated.

Reservoir routings started at median observed elevations for the mid-March large area PMP storms. Median levels were reevaluated using operating experience for:

1. The total project period, or

2. The five-year period, 1972-1976, for those projects whose operating guides were changed in 1971.

Because of the wet years of 1972-1975 and the operating guide changes, median elevations were higher for 8 of the 13 tributary reservoirs where routing is involved.

Normal reservoir operating procedures were used in the antecedent storm. These used turbine and sluice discharge in the tributary reservoirs. Turbine discharges are not used in the main river reservoirs after large flood flows develop because head differentials are too small. Normal operating procedures were used in the principal storm, except that turbine discharge was not used in either the tributary or main river dams.

All gates were determined to be operable without failures during the flood. Gates on main river dams would be fully raised, thus requiring no additional operations by the last day of the storm, which is before the structures and access roads would be inundated.

Median initial reservoir elevations were used at the start of the storm sequence used to define the PMF to be consistent with statistical experience and to avoid unreasonable combinations of extreme events. As a result, 53 percent of the total reserved system flood detention capacity was occupied at the start of the main flood. This is considered to be amply conservative. The statement made in the PSAR and subsequent versions of the FSAR that 67 percent of the reserved system detention capacity was occupied at the start of the main storm was in error. The correct percentage was 33. The remaining reserved system detention capacity was 67 percent. This erroneous statement was first made in the PSAR and was copied in subsequent statements where the routings were the same. In the revised analysis submitted in Amendment 51, all reservoirs are higher or about the same elevation at the beginning of the main storm as a result of the revised starting levels explained in Section 2.4.3.4 of the FSAR. This conservative change results in 53 percent of the total reservoir system detention capacity being occupied at the start of the main flood rather than 33 percent in previous studies.

Neither the initial reservoir levels nor the operating rules would have significant effect on maximum flood discharges and elevations at the plant site because spillway capacities, and hence, uncontrolled conditions, were reached early in the flood.

The procedures used to determine if and when an overtopped earth embankment would fail and the procedures for computing the effect of such failures are described in 2.4.4.2 and 2.4.4.3.

In testing the adequacy of the yard drainage system, to safely pass the site PMP, all underground drains were assumed clogged and the surface drainage to be full.

2.4.3.5 Water Level Determinations

The elevation hydrograph of the controlling PMF, cresting at elevation 719.6, is shown on Figure 2.4.3-12. Computation of both the probable maximum discharge hydrograph (Figure 2.4.3-11) and the corresponding elevation hydrograph was accomplished concurrently using the unsteady flow techniques described in Section 2.4.3.3.

The less critical total area storm-producing PMP depths on the 7,980-square-mile watershed would produce crest elevation 718.9 at the plant site.

Maximum water levels at buildings expected to result from the local plant PMP were determined using a transient flow (unsteady flow) model with hydraulically connected storage areas. Much of the plant site is flat, particularly at the switchyards, and a single flow path is not well defined. A transient model with interconnected storage areas very roughly approximates a two-dimensional model using one-dimensional methods by providing multiple simultaneous outlet paths for the exterior areas adjacent to plant buildings.

The separate watershed subareas and flowpaths are shown on Figure 2.4.3-13a.

The western plant site was evaluated as six interconnected storage areas with four primary weir-flow outlets and one connected transient flow stream-course model. Runoff from the western plant site will flow: Northwest to a channel along the main plant tracks and then across the main access highway (Area 7); to the West through a parking lot (Areas 6A, 6C, and 6E connected to transient flow model); Southwest through the vehicle barrier system directly to Chickamauga Lake (Area 6E); or South through the vehicle barrier system to the Yard Drainage and other Ponds (Area 6C). The maximum water surface elevations in Areas 6A and 6BS are below critical floor elevation 706.

The eastern plant site was evaluated as three interconnected storage areas with three weir-flow outlets and two connected transient flow stream-course models. Runoff from the eastern plant site will flow: North around the West and East ends of the multipurpose building to the intake channel (Area 5 connected to two transient flow models); South to the Condenser Circulating Water Discharge Channel (Areas 4 and 6D); or Southwest into the western plant site (Area 6D into 6C). The maximum water surface elevations in Areas 4, 5, and 6D are below critical floor elevation 706.

Underground drains were assumed clogged throughout the storm. For fence sections, the Manning's n value was doubled to account for increased resistance to flow and the potential for debris blockage.

The only stream adjacent to SQN is the Tennessee River. There are no streams within the site. The 1 percent-chance floodplain of the Tennessee River at the site is delineated on Figure 2.4.3-14. Details of the analyses used in the computation of the 1-percent-chance flood flow and water elevation are described in a study made by TVA for the Federal Insurance Administration (FIA) and published in February 1979 [5].

The only structures located in the 1-percent-chance floodplain are transmission towers, the intake pumping station skimmer wall, and the ERCW pump station deck. The ERCW pumps are located on the pump station deck at elevation 720.5, well above the 1-percent-chance flood level. These structures are shown on Figure 2.4.3-14.

The structures that are located in the floodplain will not alter flood flows or elevations. The 20,650-square-mile drainage area is not altered and the reduction in flow area at the site is infinitesimal and at the fringe of the flooded area. The site will be well maintained and any debris generated from it will be minimal and will present no problem to downstream facilities.

2.4.3.6 Coincident Wind-Wave Activity

Some wind waves are likely when the probable maximum flood crests at SQN. The flood would be near its crest for a day beginning about 2-1/2 days after cessation of the probable maximum storm. The day of occurrence would most likely be in the month of March or possibly the first week in April.

A conservatively high velocity of 45 miles per hour over water was adopted to associate with the probable maximum flood crest. A 45-mile- per-hour overwater velocity exceeds maximum March one-hour velocities observed in severe March windstorms of record in a homogeneous region as reported by the Corps of Engineers [6].

That a 45-mile-per-hour overwater wind is conservatively high, is supported also by an analysis of March day maximum winds of record collected at Knoxville and Chattanooga, Tennessee. The records analyzed varied from 30 years at Chattanooga to 26 years at Knoxville, providing samples ranging from 930 to 806 March days. The recorded fastest mile wind on each March day was used

rather than hourly data because this information is readily available in National Weather Service publications. Relationships to convert fastest mile winds to winds of other durations were developed from Knoxville and Chattanooga wind data contained in USWB Form 1001 and the maximum storm information contained in Technical Bulletin No. 2 [6]. From the wind frequency analysis it was determined that the 45-mile-per-hour overwater wind for the critical minimum duration of 20 minutes had an 0.1 percent chance of occurrence on any given March day.

The probability that this wind might occur on the specific day that the probable maximum flood would crest is extremely remote. Even assuming that the flood was to crest once during the 40-year plant life, the probability of the wind occurring on that particular day is in the order of 1×10^{-6}.

TVA estimates that the probability of the flood and wind occurring in a given year on the same day to be in the order of 1×10^{-11} to 1×10^{-13}.

Computation of wind waves was made using the procedures of the Corps of Engineers [7]. The critical directions were from the north-northwest and northeast with effective fetches of 1.7 and 1.5 miles, respectively. For the 45-mile-per-hour wind, 99.6 percent of the waves approaching the plant would be less than 4.2- and 4.0-foot-high crest to trough for the 1.7- and 1.5-mile fetches as shown on Figures 2.4.3-15 and 2.4.3-16. Maximum water surfaces in the reservoir approaching the plant would be 2.8 and 2.7 feet above the maximum computed level or elevations 722.4 and 722.3, respectively.

The maximum water level attained due to the PMF plus wind-wave activity is elevation 723.8 at the ERCW pump station and the nuclear island structures (shield, auxiliary, and control building).

The wind waves approaching the Diesel Generator Building and cooling towers break before reaching the structures due to the shallow depth of water. The topography surrounding these structures is such that the wind waves will break on a steeper slope (4H:1V) than the slope immediately adjacent to the structures. This is shown by Figure 2.4.3-17.

The runup estimates are calculated on the basis that the incoming wind waves break before reaching the structure and then reform for a shallower water depth. This reformed wave then approaches the structure. The runups are lower than the maximum reservoir level due to the small wave height for the reformed wave, the shallow water, and the very shallow slope before reaching the structures.

Wind-wave runup coincident with the maximum flood level for the diesel generator building and cooling towers is elevation 721.8. The level inside structures that are allowed to flood is elevation 720.1. The flood elevations used as design bases are given in Section 2.4A.1.1.

<u>Dynamic Effect of Waves</u>

1. Nonbreaking Waves

   The dynamic effect of nonbreaking waves on the walls of safety- related structures was investigated using the Rainflow Method [8]. As a result of this investigation, concrete and reinforcing stresses were found to be within allowables.

2. Breaking Waves

   The dynamic effect of breaking waves on the walls of safety-related structures was investigated using a method developed by D. D. Gaillard and D. A. Molitar. The concrete and reinforcing stresses were found to be less than the allowable stresses using this method.

3. Broken Waves

The dynamic effect of broken waves on the walls of safety-related structures was investigated using a method proposed by the U.S. Army Coastal Engineering Research Center [7]. This method of design yielded concrete and reinforcing stresses within allowable limits.

All safety-related structures are designed to withstand the static and dynamic effects of the water and waves as stated in Section 2.4.2.2.

2.4.4 Potential Dam Failures (Seismically and Otherwise Induced)

There are 20 major dams above SQN. These were examined individually and in groups to determine if failure might result from a seismic event and if such failure or failures occurring concurrently with storm runoff would create critical flood levels at the plant. Two situations were examined: (1) a one-half Safe Shutdown Earthquake (SSE) as defined in Subsection 2.5.2, imposed concurrently with one-half the probable maximum flood and (2) a Safe Shutdown Earthquake (SSE) as defined in Subsection 2.5.2, imposed concurrently with a 25-year flood. Neither of these conditions would create levels greater than the hydrologic probable maximum flood at SQN, described previously in 2.4.3. Details of the dam failure analysis are discussed in Section 2.4.4.2, Dam Failure Permutations.

Failure of Chickamauga Dam, downstream, can affect cooling water supplies at the plant. Consequently for conservatism, an arbitrary failure was imposed. This resulting condition would not be critical to plant operation, as discussed in Section 2.4.11.6.

2.4.4.1 Reservoir Description

Characteristics of dams that influence river conditions at SQN are contained in Tables 2.4.1-1 and 2.4.1-2. Their location with respect to the plant is shown on Figure 2.1.1-1. Seismic safety criteria were not incorporated in the design of dams upstream from SQN, except Tellico and Norris. Those projects having a potential to influence plant flooding levels were examined, as described in Section 2.4.4.2.

Elevation-storage relationships and seasonally varying storage allocations in the major projects are shown on the 14 sheets of Figure 2.4.1-3.

2.4.4.2 Dam Failure Permutations

The plant site and upstream reservoirs are located in the Southern Appalachian Tectonic Province and, therefore, subject to moderate earthquake forces with possible attendant failure. All upstream dams, whose failure has the potential to cause flood problems at the plant, were investigated to determine if failure from seismic or hydrologic events would endanger plant safety. Potential failures from both seismic and hydrologic events and the resulting consequences are discussed in this section.

It should be clearly understood that these studies have been made solely to ensure the safety of SQN against failure by floods caused from excessive rainfall or by the assumed failure of dams due to seismic forces. To assure that safe shutdown of SQN is not impaired by flood waters, TVA has in these studies added conservative assumptions to conservative assumptions to be able to show that the plant can be safely controlled even in the event that all these unlikely events occur in just the proper sequence. TVA is of the strong opinion that the chances of the assumed events occurring approach zero probability.

By furnishing this information, TVA does not infer or concede that its dams are inadequate to withstand great floods and/or earthquakes that may be reasonably expected to occur in the TVA region under consideration. TVA has a program of inspection and maintenance carried out on a regular schedule to keep its dams safe. Instrumentation of the dams to help keep check on their behavior was installed in many of the dams during original construction. Other instrumentation has been added since and is still being added as the need may appear or as new techniques become available.

In short, TVA has confidence that its dams are safe against catastrophic destruction by any natural forces that could be expected to occur.

2.4.4.2.1 Seismic Failure Analysis

Seismic failure analysis consisted of the following:

1. Determination of the water level at the plant during one-half the PMF with full reservoirs if its crests were augmented by flood waves from the postulated failure of upstream dams during a one-half SSE.

2. Determination of the water level at the plant during a 25-year flood with full reservoirs if its crests were augmented by flood waves from the postulated failure of upstream dams during a Safe Shutdown Earthquake (SSE).

The one-half SSE identified in condition 1 is defined in FSAR Section 2.5.2.4 as having a peak horizontal acceleration value of 0.09 g at the rock foundation. The discussion in Section 2.5.2.4 shows the extreme conservatism contained in the analysis.

In the 1998 reanalysis all potentially critical seismic events involving dam failure upstream of the plant site were reevaluated. The six events included the postulated one-half SSE failure of (1) Norris, (2) Fontana, (3) Cherokee-Douglas, and (4) Fontana-Hiwassee-Apalachia-Blue Ridge during one-half the PMF; and the postulated SSE failure of (5) Norris-Cherokee-Douglas and (6) Norris-Douglas-Fort Loudoun-Tellico during a 25 year flood.

Seismic failure of upstream dams during nonflood periods pose no threat to the plant.

Summary

A summary of the results of the seismic analysis is given in Table 2.4.4-1. SQN and upstream dams are located as shown on Figure 2.1.1-1. The highest flood level at SQN from different seismic dam failure and flood combinations would be elevation 707.9 from simultaneous failure of Fontana Dam on the Little Tennessee River and Hiwassee, Blue Ridge, and Apalachia Dams on the Hiwassee River during a one-half safe shutdown earthquake coincident with one-half the PMF. This includes improvements resulting from modifications performed for the Dam Safety Program. Wind waves could raise the elevation to 709.6 in the reservoir. Runup could reach elevation 710.4 on a 4:1 slope to elevation 712.8 on a vertical wall in shallow (4.9 feet) water, and to elevation 710.4 on a vertical wall in deep water.

Only one other seismic dam failure combination with coincident floods could cause elevations above plant grade.

Plant safety would be assured by shutdown prior to these floods crossing plant grade, elevation 705, using the warning system described in Appendix 2.4A.

The effect of postulated seismic bridge failure and resulting failure of spillway gate anchors at Watts Bar and Fort Loudoun Dams would not create a safety hazard at SQN.

Procedures

Concrete Structures

The standard method of computing stability is used. The maximum base compressive stress, average base shear stress, the factor of safety against overturning, and the shear strength required for a shear-friction factor of safety of 1 are determined. To find the shear strength required to provide a safety factor of 1, a coefficient of friction of 0.65 is assigned at the elevation of the base under consideration.

As stated in Section 2.4.1.2, all of the original stability analyses and postulated dam failure assumptions in the 1998 reanalyses were conservatively assumed to occur in the same manner and in combination with the same postulated rainfall events.

The analyses for earthquake are based on the static analysis method as given by Hinds [10] with increased hydrodynamic pressures determined by the method developed by Bustamante and Flores [11]. These analyses include applying masonry inertia forces and increased water pressure to the structure resulting from the acceleration of the structure horizontally in the upstream direction and simultaneously in a downward direction. The masonry inertia forces are determined by a dynamic analysis of the structure which takes into account amplification of the accelerations above the foundation rock.

No reduction of hydrostatic or hydrodynamic forces due to the decrease of the unit weight of water from the downward acceleration of the reservoir bottom is included in this analysis.

Waves created at the free surface of the reservoir by an earthquake are considered of no importance. Based upon studies by Chopra [12] and Zienkiewicz [13], it is our judgment that before waves of any significant height have time to develop, the earthquake will be over. The duration of earthquake used in this analysis is in the range of 20 to 30 seconds.

Although accumulated silt on the reservoir bottom would dampen vertically traveling waves, the effect of silt on structures is not considered. There is only a small amount of silt now present, and the accumulation rate is slow, as measured by TVA for many years [14].

Embankment

Embankment analysis was made using the standard slip circle method, except for Chatuge and Nottely Dams where the Nemark method for the dynamic analysis of embankment slopes was used. The effect of the earthquake is taken into account by applying the appropriate static inertia force to the dam mass within the assumed slip circle.

In the analysis, the embankment design constants used, including the sheer strength of the materials in the dam and the foundation, are the same as those used in the original stability analysis.

Although detailed dynamic soil properties are not available, a value for seismic amplification through the soil has been assumed based on previous studies pertaining to TVA nuclear plants. These studies have indicated maximum amplification values slightly in excess of two for a rather wide range of shear wave velocity to soil height ratios. For these analyses, a straight-line variation is used with an acceleration at the top of the embankment being two times the top of rock acceleration.

Flood Routing

The runoff model described in Section 2.4.3.3, which includes unsteady flow models for critical reservoirs and river reaches, was used to reevaluate plant site flood levels resulting from the postulated SSE and one-half SSE dam failure combinations. The remaining events produced plant site flood levels sufficiently lower than the controlling events and were not evaluated.

Reservoir operating procedures used were those applicable to the season and flood inflows.

This section was revised with a major rearrangement to locate the controlling events evaluated in the 1998 analysis first and the non-controlling events, which were not re-calculated later. The non-controlling events are left in the SAR for history.

<u>One-half SSE Concurrent With One-Half the Probable Maximum Flood</u>

Previous evaluations have been made which determined flood levels at SQN for potentially critical events. Re-evaluations made later using the updated runoff model described in Section 2.4.3.3 and including the Dam Safety Program modifications did not determine flood levels for those events which were previously shown to clearly not be controlling. The 1998 analysis for determining the effects of the Dam Safety Program modifications determined that non-flood related seismic dam failure events clearly pose no threat to the plant. Flood levels were determined for six combined seismic/flood events. Only two of these controlling seismic/flood events would exceed plant grade. These two events consist of multiple dam failures on (1) Little Tennessee/Hiwassee, and (2) Clinch/Upper Tennessee rivers with flood levels at SQN of El. 707.9 and 706, respectively. The following is detailed descriptions of the potentially critical controlling events including reevaluated flood levels, followed by brief descriptions of the non-controlling failure events previously evaluated.

<u>Multiple Failures</u>

Although considered, as discussed in the following paragraphs, TVA believes that multiple dam failures are an extremely unlikely event. TVA's search of the literature reveals no record of failure of concrete dams from earthquake. The postulation of an SSE of 0.18 g acceleration is a very conservative upper limit in itself (as stated in Section 2.5.2). In addition, the SSE must be located in a very precise region to have the potential for multiple dam failures.

SSE - In order to fail three dams--Norris, Cherokee, and Douglas--the epicenter of a SSE must be confined to a relatively small area, the shape of a football, about 10 miles wide and 20 miles long. In order to fail four dams--Norris, Douglas, Fort Loudoun, and Tellico--the epicenter of an SSE must be confined to a triangular area with sides of approximately 1 mile in length. However, as an extreme upper limit the above two combinations of dams are postulated to fail as well as the combinations of (1) Fort Loudoun, Tellico, and Fontana; (2) Fontana and Douglas; and (3) Fontana and the six Hiwassee River dams. The 1998 re-analysis determined that only the first two combinations are controlling and need to be considered. Only the Norris-Cherokee-Douglas event would exceed plant grade elevation.

One-half SSE - Attenuation studies of the one-half SSE show that there are three combinations of simultaneous failures of more than one dam which need to be considered with respect to SQN safety which are discussed below. These are (1) Cherokee-Douglas, (2) Fontana-Hiwassee-Apalachia-Blue Ridge, and (3) Hiwassee-Apalachia-Blue Ridge-Ocoee No 1.-Nottely. The 1998 re-analysis determined that only the first two combinations are controlling and need to be considered. Only the Fontana-Hiwasse-Apalachia-Blue Ridge event would exceed plant grade.

The following descriptions are first for the controlling events for which flood levels were calculated for the 1998 reanalysis, followed by the non-controlling events which were not re-analyzed in 1998.

<u>One-half SSE Concurrent With One-Half the Probable Maximum Flood (Controlling Events)</u>

1. Norris Dam

Results of the Norris Dam stability analyses for a typical spillway block and a typical non-overflow section of maximum height are shown on Figure 2.4.4-8. Because only a small percentage of the spillway base is in compression, this structure is judged to fail. The high non-overflow section with a small percentage of the base in compression and with high compressive and shearing stresses is also judged to fail.

Figure 2.4.4-9 shows the likely condition of the dam after failure. Based on stability analyses, the non-overflow blocks remaining in place are judged to withstand the one-half SSE. Blocks 33-44 are judged to fail by overturning.

The location of the debris is not based on any calculated procedure of failure because it is believed that this is not possible. It is TVA's judgment, however, that the failure mode shown is one logical assumption; and, although there may be many other logical assumptions, the amount of channel obstruction would probably be about the same.

The discharge rating for this controlling, debris section was developed from a 1:150 scale hydraulic model at the TVA Engineering Laboratory and was verified closely by mathematical analysis.

In the hydrologic routing for this failure, Melton Hill Dam was postulated to fail when the flood wave reached headwater elevation 804, based on structural analysis. The headwater at Watts Bar Dam would reach elevation 758.1, 8.9 feet below top of dam. The west saddle dike at Watts Bar Dam would be overtopped and breached. A complete washout of the dike was assumed. The resulting water level at the nuclear plant site is 698.1, 6.9 feet below plant grade 705.

2. Fontana Dam

Fontana Dam was assumed to fail in the one-half SSE, although no stability analysis was made. Fontana is a high dam constructed with three longitudinal contraction joints in the higher blocks.

A structural defect in Fontana Dam was found in October of 1972 and consists of a longitudinal crack in three blocks in the curved portion at the left end of the dam (see Figure 2.4.4-16). Strengthening of these blocks by post-tensioning and grouting of the cracks was completed in October 1973 (see Figure 2.4.4-17). Only these three blocks are cracked, and there is no evidence that any other portion of the dam is weakened.

Studies and tests, undertaken with the concurrence of a board of private consulting engineers, indicate that this cracking was caused by a longitudinal thrust created by a combination of long-time concrete growth and expansion due to temperature rise in the summer months. This thrust tends to push the curved blocks upstream. The studies and tests will continue until there is established a basis for design of permanent measures to control the future behavior of the dam.

The strengthening work has reestablished the structural integrity of the cracked blocks. Although the joints are keyed and grouted, it is possible that the grouting was not fully effective. Consequently, there is some question as to how this structure will respond to the motion of a severe earthquake. To be conservative, therefore, it is assumed that Fontana Dam will not resist the one-half SSE without failure.

Figure 2.4.4-16 shows the part of Fontana Dam judged to remain in its original position after failure and the assumed location of the debris of the failed portion. The location of the debris after failure is one logical assumption based on a failure of the dam at the longitudinal contraction joints. There may be other logical assumptions, but the amount of channel obstruction would probably be about the same.

The higher blocks 9-27, containing either two or three longitudinal joints, are assumed to fail. Right abutment blocks 1-8 and left abutment blocks 28 and beyond were judged to be stable for the following reasons:

1. Their heights are less than one-half the maximum height of the dam.

2. None of these blocks have more than one longitudinal contraction joint, and some have no longitudinal joints.

3. The back slope of Fontana Dam is one on 0.76, which the original stability analysis shows is flatter than that required for stability for the normal static loadings.

Although not investigated, it was assumed that Nantahala Dam, upstream from Fontana and Santeetlah on a downstream tributary, and the three ALCOA dams, downstream on the Little Tennessee River, Cheoah, Calderwood, and Chilhowee, would fail along with Fontana in the one-half SSE. Instant vanishment was assumed. Tellico and Watts Bar Dam spillway gates would be operable during and after the one-half SSE. Failure of the bridge at Fort Loudoun Dam would render the spillway gates inoperable in the wide-open position.

The flood wave would overtop Tellico Dam and its saddle dikes. Transfer of water into Fort Loudoun would occur but would not be sufficient to overtop the dam or to prevent failure of Tellico Dam. Tellico was postulated to completely fail. Watts Bar headwater would reach elevation 761.3, 5.7 feet below top of dam. The Watts Bar west saddle dike would be overtopped and breached. A complete washout of the dike was assumed. The elevation at the plant site would be 702.8, 2.2 feet below plant grade.

3. Cherokee-Douglas

The simultaneous failure of Cherokee and Douglas Dams could occur when the one-half SSE is located midway between the dams which are just 15 miles apart.

Results of the Cherokee Dam stability analysis for a typical spillway block are shown in Figure 2.4.4-10. Based on this analysis, the spillway is judged stable at the foundation base elevation 900. Analyses made for other elevations above elevation 900, but not shown in Figure 2.4.4-10, indicate the resultant of forces falls outside the base at elevation 1010. The spillway is assumed to fail at that elevation.

The non-overflow dam is embedded in fill to elevation 981.5 and is considered stable below that elevation. However, stability analysis indicates failure will occur above the fill line.

The powerhouse intake is massive and backed up by the powerhouse. Therefore, it is judged able to withstand the one-half SSE without failure.

Results of the analysis for the highest portion of the south embankment are shown on Figure 2.4.4-11. The analysis was made using the same shear strengths of material as were used in the original analysis and shows a factor of safety of 0.85. Therefore, the south embankment is assumed to fail during the one-half SSE. Because the north embankment and saddle dams 1, 2, and 3 are generally about one-half or less as high as the south embankment, they are judged to be stable for the one-half SSE.

Figure 2.4.4-12 shows the assumed condition of the dam after failure. All debris from the failure of the concrete portion is assumed to be located downstream in the channel at elevations lower than the remaining portions of the dam, and therefore, will not obstruct flow.

Results of the Douglas Dam original stability analysis for a typical spillway block are shown in Figure 2.4.4-13. The upper part of the Douglas spillway is approximately 12 feet higher than Cherokee, but the amplification of the rock surface acceleration is the same. Therefore, based on the Cherokee analysis, it is judged that the Douglas spillway will fail at elevation 937, which corresponds to the assumed failure elevation of the Cherokee spillway.

The Douglas non-overflow dam is similar to that at Cherokee and is embedded in fill to elevation 927.5. It is considered stable below that elevation. However, based on the Cherokee analysis, it is assumed to fail above the fill line. The abutment non-overflow blocks 1-5 and 29-35, being short blocks, are considered able to resist the one-half SSE without failure.

The powerhouse intake is massive and backed up downstream by the powerhouse. Therefore, it is considered able to withstand the one-half SSE without failure.

Results of the original analysis of the saddle dam shown on Figure 2.4.4-14 indicate a factor of safety of one. Therefore, the saddle dam is considered to be stable for the one-half SSE.

Figure 2.4.4-15 shows the portions of the dam judged to fail and the portions judged to remain. All debris from the failed portions is assumed to be located downstream in the channel at elevations lower than the remaining portions of the dam and, therefore, will not obstruct flow.

These failures, in conjunction with one-half the probable maximum flood, would overtop Fort Loudon for only 6 hours, but would not fail the dam. At Watts Bar the west saddle dike would be overtopped and breached. A complete washout of the dike was assumed. Crest level at SQN would be elevation 701.1, 3.9 feet below plant.

4. Fontana, Hiwassee, Apalachia, and Blue Ridge Dams

Fontana, Hiwassee, Apalachia, and Blue Ridge Dams could fail when the one-half SSE is located within the football-shaped area shown in Figure 2.4.4-18.

This event produces maximum ground accelerations of 0.09 g at Fontana, 0.09 g at Hiwassee, 0.07 g at Apalachia, 0.08 g at Chatuge, 0.05 g at Nottely, 0.03 g at Ocoee No. 1, 0.04 g at Blue Ridge, 0.04 g at Fort Loudoun and Tellico, and 0.03 g at Watts Bar. Failure is postulated for Fontana and Hiwassee for an earthquake epicenter located anywhere within the football-shaped area shown on

Figure 2.4.4-18. Ground accelerations shown for the various dams are maximum that could occur for epicenters located at various points in the described area and would not occur simultaneously. Fort Loudoun, Tellico, and Watts Bar Dams and spillway gates would remain intact. The degree of Fontana failure and likely position of debris are judged to be comparable to that shown for single failure in Figure 2.4.4-16. Hiwassee, Apalachia, and Blue Ridge Dams were assumed to completely disappear. Chatuge was judged not to fail as the acceleration is less than for the one-half SSE centered at the dam.

Nottely Dam is a rockfill dam with large central impervious rolled fill core. The maximum attenuated ground acceleration at Nottely is only 0.054 g. A field exploration boring program and laboratory testing program of samples obtained in a field exploration was conducted. During the field exploration program, standard penetration tests blow counts were obtained on both the embankment and its foundation materials. Both static and dynamic (cyclic) triaxial shear tests were made. This information was used in the Newmark Method of Analysis. The "Newmark Method of Analysis" (Newmark, N. M., "Effects of Earthquake on Dams of Embankments," Geotechnique 15:140-141, 156, 1965) utilizing the information obtained from the testing program was used to determine the structural stability of Nottely Dam. We conclude Nottely Dam can easily resist the attenuated ground acceleration of 0.054 g with no detrimental damage.

Ocoee No. 1 Dam is a concrete gravity structure. The maximum attenuated ground acceleration is 0.03 g. The 0.03 g with the proper amplification was used to analyze the structural stability of structures at Ocoee No. 1. The method of analysis used was the same as described previously under "Procedures, Concrete Structures." The analysis shows low stresses with good factors of safety against sliding and overturning. We conclude the dam will not fail.

In the original analysis, the failure wave hydrograph was approximated for the Hiwassee River at its mouth for the failures of Hiwassee, Apalachia and Blue Ridge Dams. In the 1998 re-analysis an unsteady flow model described in Section 2.4.3.3 developed during the dam safety studies was used as an adjunct to route the Hiwassee, Apalachia and Blue Ridge failures.

In the simultaneous failure of Fontana, Hiwassee, Apalachia, and Blue Ridge Dams, the Fontana failure wave would overtop and fail the Tellico embankments. Transfer of water into Fort Loudoun would occur but would not be sufficient to overtop the dam or to prevent failure of Tellico. Tellico was postulated to completely fail. Watts Bar headwater would reach elevation 761.3, 5.7 feet below top of dam. The west saddle dike at Watts Bar would be overtopped. A complete washout of the dike down to ground elevation was assumed. This flood wave combined with that of Hiwassee, Blue Ridge, and Apalachia Dams would produce a maximum flood level at the plant site of 707.9, 2.9 feet above 705 plant grade. This is the highest flood resulting from any combination of seismic and concurrent flood events. The stage hydrograph at the plant site is shown on Figure 2.4.4-21.

<u>SSE Concurrent With 25-Year Flood (Controlling Events)</u>

5. Norris, Cherokee, and Douglas

Norris, Cherokee, and Douglas Dams were also postulated to fail simultaneously. Figure 2.4.4-29 shows the location of an SSE, and its attenuation, which produces 0.15 g at Norris, 0.09 g at Cherokee and Douglas, 0.08 g at Fort Loudoun and Tellico, 0.05 g at Fontana, and 0.03 g at Watts Bar. Fort Loudoun, Tellico, and Watts Bar have been judged not to fail for the one-half SSE (acceleration value of 0.09 g) (see following discussion of non-controlling events). The bridge at Fort Loudoun Dam, however, might fail under 0.08 g forces, falling on any open gates and on gate-hoisting machinery. Trunnion anchor bolts of open gates would fail and the gates would be washed downstream, leaving an open spillway. Closed gates could not be opened. The most conservative

assumption was used that at the time of the seismic event on the upstream tributary dams, the crest of the 25-year flood would likely have passed Fort Loudoun and flows would have been reduced to turbine capacity. Hence spillway gates would be closed. As stated before, it is believed that multiple dam failure is extremely remote, and it seems reasonable to exclude Fontana on the basis of being the most distant in the cluster of dams under consideration. For the postulated failures of Norris, Cherokee, and Douglas, the portions judged to remain and debris arrangements are as given in Figures 2.4.4-9, 2.4.4-12, and 2.4.4-15, respectively.

The SSE will produce the same postulated failures of Cherokee and Douglas Dams as were described for the one-half SSE.

For Norris under SSE conditions, blocks 31-45 (883 feet of length) are judged to fail. The resulting debris downstream would occupy a greater span of the valley cross section than would the debris from the one-half SSE but with the same top level, elevation 970. Figure 2.4.4-28 shows the part of the dam judged to fail and the location and height of the resulting debris. The discharge rating for this controlling debris section was developed from a 1:150 scale hydraulic model at the TVA Engineering Laboratory and was verified closely by mathematical analysis. The somewhat more extensive debris in SSE failure restricts discharge slightly compared to one-half SSE failure conditions.

The flood for the postulated failure combination would overtop and breach Fort Loudoun Dam. Although transfer of water into Tellico would occur, it would not be sufficient to overtop the dam. At Watts Bar Dam the headwater would reach 764.9, 2.1 feet below the top of the earth embankment of the main dam. However, the west saddle dike at Watts Bar Dam would be overtopped and breached. Resulting water surface at SQN would reach elevation 706. This is 1.0 foot higher than plant grade. This is the highest flood resulting from any combination of SSE seismic and flood events. The flood elevation Flow and stage hydrographs at the plant site is shown on Figure 2.4.4-30.

6. Norris, Douglas, Fort Loudoun, and Tellico

Norris, Douglas, Fort Loudoun, and Tellico Dams were postulated to fail simultaneously. Figure 2.4.4-31 shows the location of an SSE, and its attenuation, which produces 0.12 g at Norris, 0.08 g at Douglas, 0.12 g at Fort Loudoun and Tellico, 0.07 g at Cherokee, 0.06 g at Fontana, and 0.04 g at Watts Bar. Cherokee is judged not to fail at 0.07 g; Watts Bar has previously been judged not to fail at 0.09 g; and, for the same reasons as given above, it seems reasonable to exclude Fontana in this failure combination. For the postulated failures of Norris, Douglas, Fort Loudoun, and Tellico, the portions judged to remain and the debris arrangements are as given in Figures 2.4.4-9, 2.4.4-15, 2.4.4-26, and 2.4.4-27, respectively. For analysis purposes, Fort Loudoun and Tellico were postulated to fail completely as the portions judged to remain are relatively small.

The SSE will produce the same postulated failure of Douglas Dam as was described for the one-half SSE.

Results of the stability analysis for Fort Loudoun Dam are shown on Figure 2.4.4-24. Because the resultant of forces falls outside the base, a portion of the spillway is judged to fail. Based on previous modes of failure for Cherokee and Douglas, the spillway is judged to fail above elevation 750 as well as the bridge supported by the spillway piers.

The results of the slip circle analysis for the highest portion of the embankment are shown on Figure 2.4.4-25. Because the factor of safety is less than one, the embankment is assumed to fail.

No analysis was made for the powerhouse under SSE. However, an analysis was made for the one-half SSE with no water in the units, a condition believed to be extremely remote to occur during the one-half SSE. Because the stresses were low and a large percentage of the base was in compression, it is considered that the addition of water in the units would be a stabilizing factor, and the powerhouse is judged not to fail.

Figure 2.4.4-26 shows the condition of the dam after assumed failure. All debris from the failure of the concrete portions is assumed to be located in the channel below the failure elevations.

No structural analysis was made for Tellico Dam failure in the SSE. Because of the similarity to Fort Loudoun, the spillway and entire embankment are judged to fail in a manner similar to Fort Loudoun. Figure 2.4.4-27 shows after failure conditions with all debris assumed located in the channel below the failure elevation.

This postulated failure combination results in Watts Bar headwater elevation 758.9, 8.1 feet below above the top of the embankment of the main dam. The west saddle dike at Watts Bar Dam would be overtopped and breached. A complete washout of the dike was assumed. The resulting water level at SQN would be elevation 699.3, 5.7 feet below plant grade 705.

<u>One-half SSE Concurrent With One-Half the Probable Maximum Flood (Non-controlling Events-Historical)</u>

1. Watts Bar Dam

Stability analyses of Watts Bar Dam powerhouse and spillway sections result in the judgment that these structures will not fail. The analyses show low stresses with about 38 percent of the spillway base in compression and about 42 percent of the powerhouse base in compression. Results are given in Figure 2.4.4-1. Dynamic analysis of the concrete structures resulted in the determination that the base acceleration is amplified at levels above the base.

The slip circle analysis of the earth embankment section results in a factor of safety of 1.52, and the embankment is judged not to fail. Results are given in Figure 2.4.4-2.

Normally for the condition of peak discharge at the dam for one-half the PMF, the spillway gates would be in the wide open position (Figure 2.4.4-3). But, analysis of the bridge structure for forces resulting from a one-half SSE, including amplification of acceleration results in the determination that the bridge could fail as a result of shearing the anchor bolts. The downstream bridge girders could strike the spillway gates. The impact of the girders striking the gates could fail the bolts which anchor the gate trunnions to the pier anchorages allowing the gates to fall. The flow over the spillway crest would be the same as that prior to bridge and gate failure. Hence, bridge failure will cause no adverse effect on the flood.

A potentially severe condition is the bridge falling when most spillway gates would be closed. The gate hoisting machinery would be inoperable after being struck by the bridge. As a result, the flood would crest with the gates closed and the bridge deck and girders lying on top of the spillway piers. Analysis of the concrete portions of the dam for the headwater for this condition shows that they will not fail.

Flood levels at SQN for all the conditions described above is safely below plant grade elevation 705.

2. Fort Loudoun Dam

Stability analyses of Fort Loudoun Dam powerhouse and spillway sections result in the judgment that these structures will not fail. The analyses show low base stresses, with near two-thirds of the base in compression. Results are given in Figure 2.4.4-4.

Slip circle analysis of the earth embankment results in a factor of safety of 1.26, and the embankment is judged not to fail. Results are given in Figure 2.4.4-5.

The spillway gates and bridge are of the same design as those at Watts Bar Dam. Conditions of failure during a one-half SSE are the same, and no problems are likely. Coincident failure at Fort Loudoun and Watts Bar does not occur.

For the potentially critical case of Fort Loudoun bridge failure at the onset of the main portion of one-half the probable maximum flood flow into Fort Loudoun Reservoir, it was found that the Watts Bar inflows are much less than the condition resulting from simultaneous failure of Cherokee and Douglas.

3. Tellico Dam

No part of Tellico Dam is judged to fail. Results of the stability analyses for a typical non-overflow block and a typical spillway block are shown in Figure 2.4.4-6. The result of the stability analysis of the earth embankment is shown in Figure 2.4.4-7 and indicates a factor of safety of 1.28.

4. Cherokee Dam

No hydrologic results are given for the single failure of Cherokee Dam because the simultaneous failure of Cherokee and Douglas is more critical.

5. Douglas Dam

No hydrologic results are given for the single failure of Douglas Dam because the simultaneous failure of Cherokee and Douglas is more critical.

6. Hiwassee River Dams

Hiwassee Dam was assumed to fail in the one-half SSE. No hydrologic results are given for the single failure of Hiwassee Dam because its simultaneous failure with other dams is more critical.

7. Apalachia

Apalachia Dam was assumed to fail in the one-half SSE. No hydrologic results are given for the single failure of Apalachia Dam because its simultaneous failure with other dams is more critical.

8. Blue Ridge

Blue Ridge Dam was assumed to fail in the one-half SSE. No hydrologic results are given for the single failure of Blue Ridge Dam because its simultaneous failure with other dams is more critical.

9. Ocoee No. 1

Ocoee No. 1 Dam was assumed to fail in the one-half SSE. No hydrologic results are given for the single failure of Ocoee No. 1 Dam because its simultaneous failure with other dams is more critical.

10. Nottely

Nottely Dam was assumed to fail in the one-half SSE. No hydrologic results are given for the single failure of Nottely Dam because its simultaneous failure with other dams is more critical.

11. Chatuge

Chatuge Dam is a homogeneous, impervious rolled-fill dam. With the epicenter of the one-half SSE located at the dam, the maximum ground acceleration at Chatuge is 0.09 g. Ground accelerations of this magnitude should have no detrimental effects on a well-constructed compacted earthfill embankment. We know of no failures of compacted earth embankment slopes from earthquake motions. Failures to date have been associated with other liquefaction of hydraulic fill embankments of liquefaction of loose granular foundation materials. The rolled embankment materials in Chatuge are not sensitive to liquefaction. To verify these conclusion analysis using the "Newmark Method for the Dynamic Analysis of Embankment Slopes" (Newmark, N. M., "Effects of Earthquake on Dams of Embankments," Geotechnique 15:140-141, 156, 1965) was made to determine the structural stability of Chatuge. We conducted a field exploration boring program and laboratory testing program of samples obtained in the field exploration. During the field exploration program, standard penetration tests blow counts were obtained on both the embankment and its foundation materials. Both static and dynamic (cyclic) triaxial shear tests were made. This information was used in the Newmark Method of Analysis. We concluded from the Analysis that the Chatuge Dam can easily resist the ground acceleration of 0.09 g with no detrimental damage.

12. Hiwassee, Apalachia, Blue Ridge, Ocoee No. 1, and Nottely

Hiwassee, Apalachia, Blue Ridge, Ocoee No.1, and Nottely Dams could fail when the one-half SSE is critically located. All five dams were assumed to completely disappear in this event. Resulting crest level at SQN would be below plant grade 705.

<u>SSE Concurrent With 25-Year Flood (Non-controlling Events - Historical)</u>

1. Watts Bar Dam

A reevaluation was not made for Watts Bar Dam for SSE conditions. A previous evaluation had determined that even if the dam is arbitrarily removed instantaneously, the level at the nuclear plant site would be below plant grade.

2. Fort Loudoun Dam

No hydrologic routing for the single failure of Fort Loudoun, including the bridge structure, is made because its simultaneous failure with Tellico and Fontana, as well as with Tellico, Norris, and Douglas, are controlling.

3. Tellico Dam

No routing for the single failure of Tellico is made for the reasons given above for Fort Loudoun.

4. Norris Dam

This postulated single failure would result in peak headwater at Watts Bar below the top of the earth portions of the dam. Routing was not carried further because it was evident that flood levels at the plant site would be considerably lower than for the Norris failure in the one-half SSE combined with the one-half PMF.

5. Hiwassee River Dams Considered Separately

No structural analyses were made for Chatuge, Nottely, Blue Ridge, Ocoee No. 1, Hiwassee, and Apalachia in the SSE. Instead, all six dams were postulated to fail completely.

No routing for the failure of the six Hiwassee dams alone is made because their simultaneous failure with Fontana is considered as discussed earlier in this subparagraph.

6. Cherokee, Douglas, and Fontana Considered Separately

The SSE will produce the same postulated failures of Cherokee, Douglas, and Fontana Dams as were described for the one-half SSE. None of these failures need to be carried downstream, however, because elevations would be lower than the same failures in one-half the probable maximum flood.

7. Fort Loudoun, Tellico, and Fontana

An SSE centered between Fontana and the Fort Loudoun-Tellico complex was postulated to fail these three dams. The four ALCOA dams downstream from Fontana and Nantahala, an ALCOA dam, upstream were also postulated to fail completely in this event. Watts Bar Dam and spillway gates would remain intact, but failure of the roadway bridge was postulated which would render the spillway gates inoperable. At the time of seismic failure, discharges would be small in the 25-year flood. For conservatism, Watts Bar gates were assumed inoperable in the closed position after the SSE event. This event would result in a flood level at the nuclear plant site below 705 plant grade.

8. Douglas and Fontana

Douglas and Fontana were postulated to fail simultaneously. The location of an SSE required to fail both dams would produce 0.14 g at Douglas, 0.09 g at Fontana, 0.07 g at Cherokee, 0.05 g at Norris, 0.06 g at Fort Loudoun and Tellico, and 0.03 g at Watts Bar. For the postulated failures of Douglas and Fontana, the portions judged to remain and the debris arrangements are as given in Figures 2.4.4-15 and 2.4.4-16. Fort Loudoun, Tellico, and Watts Bar have previously been judged not to fail for the OBE (0.09 g). The bridge at Fort Loudoun Dam, however, might fail under 0.06 g forces, falling on gates and on gate hoisting machinery. Fort Loudoun gates were assumed inoperable in the closed position following the SSE event. Resulting water surface at SQN would be below plant grade.

9. Fontana and Hiwassee River Dams

Fontana and six Hiwassee River dams--Hiwassee, Apalachia, Chatuge, Nottely, Blue Ridge, and Ocoee No. 1--were postulated to fail simultaneously. For the postulated failure of Fontana, the portion judged to remain and the debris arrangements are as given in Figure 2.4.4-16. The six Hiwassee dams were assumed to fail completely. Fort Loudoun, Tellico, and Watts Bar are judged not to fail with all gates operable. The Fontana surge combined with that of the six Hiwassee River dams would reach an elevation at the plant site below the plant grade.

2.4.4.2.2 Hydrologic Failure Analysis

All upstream and downstream dams which could have significant influence on flood levels at SQN were examined for potential failure during all flood conditions, which would have the potential to produce maximum plant flood levels including the dam PMF at the individual upstream dams. Concrete sections were examined for overturning and horizontal shear and sliding. Spillway gates were examined for stability at potentially critical water levels and against failure from being struck by water borne objects. Locks and lock gates were examined for stability, and earth embankments were examined for erosion due to overtopping.

During the SQN PMF, the only failure would be the west saddle dike at Watts Bar. Chickamauga Dam would be overtopped but was conservatively assumed not to fail.

Concrete Section Analysis

For concrete dam sections, comparisons were made between the original design headwater and tailwater levels and those that would prevail in the PMF. If the overturning moments and horizontal forces were not increased by more than 20 percent, the structures were considered safe against failure. All upstream dams passed this test except Douglas, Fort Loudoun, and Watts Bar. Original designs showed the spillway sections of these dams to be most vulnerable. These spillway sections were examined in further detail and judged to be stable.

Spillway Gates

During peak PMF conditions the radial spillway gates of Fort Loudoun and Watts Bar Dams will be wide open with flow over the gates and under the gates. For this condition both the static and dynamic load stresses in the main structural members of the gate will be less than the yield stress by a factor of three. The stress in the trunnion pin is less than the allowable design stress by a factor greater than 10. The trunnion pin is prevented from dislodgment by a key into the gate anchorage assembly and fitting into a slot in the pin.

The gates were also investigated for the condition when rising headwater level first begins to exceed the bottom of the gates in the wide-open position. This condition produces the largest forces tending to rotate the radial gates upward. In the wide-open position the gates are dogged against steel gate stops anchored to the concrete piers. The stresses in the gate stop members are less than the yield stress of the material by a factor of 2.

It is concluded that the above-listed margins are sufficient to provide assurance also that the gates will not fail as a result of additional stresses which may result from possible vibrations of the gates acting as orifices.

Waterborne Objects

Consideration has been given to the effect of water borne objects striking the spillway gates and bents supporting the bridge across Watts Bar Dam at peak water level at the dam. The most severe potential for damage would be by a barge which has been torn loose from its moorings and floats into the dam.

Should the barge approach the spillway portion of the dam end on, one bridge bent could be failed by the barge and two spillway gates could be damaged and possibly swept away. The loss of one bridge bent will not collapse the bridge because the bridge girders are continuous members and the stress in

the girders will be less than the ultimate stress for this condition of one support being lost. Should two gates be swept away, the nappe of the water surface over the spillway weir would be such that the barge would be grounded on the tops of the concrete spillway weirs and provide a partial obstruction to flow comparable to unfailed spillway gates. Hence the loss of two gates from this cause will have little effect on the peak flow and elevation.

Should the barge approach the spillway portion broadside, two and possibly three bridge bents could be failed. For this condition, the bridge would collapse on the barge and the barge would be grounded on the tops of the spillway weirs. This would be probable because the approach velocity of the barge would be from 4-to-7 miles per hour and the bottom of the barge would be about six inches above the tops of the weirs. For this condition the barge would be grounded before striking the spillway gates because the gates are about 20 feet downstream from the leg of the upstream bridge bents.

Lock Gates

The lock gates at Fort Loudoun, Watts Bar, and Chickamauga were examined for possible failure with the conclusion that no potential for failure exists because the gates are designed for a differential hydrostatic head greater than that which exists during the probable maximum flood.

Embankment Breaching

In the 1998 reanalysis, the only embankment failure would be the west saddle dike at Watts Bar Dam. Chickamauga Dam, downstream of the plant, would be overtopped but was assumed not to fail. This is conservative as failure of Chickamauga Dam would slightly lower flood elevations at the plant.

The adopted relationship to compute the rate of erosion in an earth dam failure is that developed and used by the Bureau of Reclamation in connection with its safety of dams program [16]. The expression relates the volume of eroded fill material to the volume of water flowing through the breach. The equation is:

$$\frac{Q_{soil}}{Q_{water}} = Ke^{-x}$$

where

Q_{soil} = Volume of soil eroded in each time period

Q_{water} = Volume of water discharged each time period

K = Constant of proportionality, 1 for the soil and discharge relationships in this study

e = Base of natural logarithm system

$$X = \frac{b}{H} \tan \phi_d$$

Where

b = Base length of overflow channel at any given time
H= Hydraulic head at any given time
ϕ_d= Developed angle of friction of soil material. A conservative value of 13 degrees was adopted for materials in the dams investigated.

Solving the equation, which was computerized, involves a trial and error procedure over short depth and time increments. In the program, depth changes of 0.1 foot or less are used to keep time increments to less than one second during rapid failure and up to about 350 seconds prior to breaching.

The solution of an earth embankment breach begins by solving the erosion equation using a headwater elevation hydrograph assuming no failure. Erosion is postulated to occur across the entire earth section and to start at the downstream edge when headwater elevations reached a selected depth above the dam top elevation. Subsequently, when erosion reaches the upstream edge of the embankment, breaching and rapid lowering of the embankment begins. Thereafter, computations include headwater adjustments for increased reservoir outflow resulting from the breach.

Watts Bar West Saddle Dike Embankment Failure

Figure 2.4.4-37 is a general plan of Watts Bar showing elevations and sections. Figure 2.4.4-38 is a topographic map of the general vicinity of Watts Bar Dam. Figure 2.4.4-39 is a general plan and section of the west saddle dike.

The west saddle dike was examined and found subject to failure from overtopping. This failure was assumed to be a complete washout and add to the discharge from Watts Bar Dam.

Some verification for the breaching computational procedures illustrated above was obtained by comparison with actual failures reported in the literature and in informal discussion with hydrologic engineers. These reports show that overtopped earth embankments do not necessarily fail. Earth embankments have sustained overtopping of several feet for several hours before failure occurred. An extreme example is Oros earth dam in Brazil [17] which was overtopped to a depth of approximately 2.6 feet along a 2,000-foot length for 12 hours before breaching began. Once an earth embankment is breached, failure tends to progress rapidly, however. How rapidly depends upon the material and headwater depths during failure. Complete failures computed in this and other studies have varied from about one-half to six hours after initial breaching. This is consistent with actual failures.

Chickamauga Embankment Failure

In the original analysis, the failure of earth embankments at Chickamauga Dam, 13.5 miles downstream from SQN, reduced reduce flood levels at the plant by 0.9 feet. Future embankment improvements are planned for Chickamauga Dam, which if implemented, would prevent failure. Therefore, although overtopped in the PMF, the dam was assumed not to fail in determining flood elevations at the plant. This assumption is conservative.

2.4.4.3 Unsteady Flow Analysis of Potential Dam Failures

Unsteady flow routing techniques were used to evaluate plant site flood levels wherever their inherent accuracy was needed. For PMF determinations unsteady flow models described in Section 2.4.3.3 were used. For routing floods from postulated seismically induced dam failures of tributary dams, additional unsteady flow models were used as adjuncts to those described in Section 2.4.3.3.

Unsteady flow techniques were applied in Norris Reservoir. The Norris Reservoir model was developed in sufficient detail to define the manner in which the reservoir would supply and sustain outflow following postulated dam failure. The model was verified by comparing its routed headwater level in the one-half PMF with those using storage-routing techniques. Headwater level agreed within a foot, and the model was considered adequate for the purpose.

Unsteady flow techniques were also applied in Cherokee, Douglas, and Fontana Reservoirs. The reservoir models were developed in sufficient detail to define the manner in which the reservoirs would supply and sustain outflow following postulated dam failure.

2.4.4.4 Water Level at Plant Site

Maximum water level at the plant from different postulated combinations of seismic dam failures coincident with floods would be elevation 707.9, excluding wind wave effects. It would result from the one-half SSE failure of Fontana, Hiwassee, Apalachia, and Blue Ridge Dams coincident with one-half the probable maximum flood. March wind with one percent exceedance probability over the 1.4-mile effective fetch from the critical north-northwest direction is 26 miles per hour over land. This would cause reservoir waves to reach elevation 709.6. Runup could reach elevation 710.4 on a smooth 4:1 slope, elevation 712.8 on a vertical wall in shallow (4.9 feet) water, and elevation 710.4 on a vertical wall in deep water.

2.4.5 Probable Maximum Surge and Seiche Flooding (HISTORICAL INFORMATION)

Chickamauga Lake level during nonflood conditions could be no higher than elevation 685.44, top of gates, and is not likely to exceed elevation 682.5, normal summer level, for any significant time. No conceivable hurricane or cyclonic-type winds could produce the over 20 feet of wave height required to reach plant grade elevation 705.

2.4.6 Probable Maximum Tsunami Flooding (HISTORICAL INFORMATION)

Because of its inland location, SQN is not endangered by tsunami flooding.

2.4.7 Ice Flooding and Landslides (HISTORICAL INFORMATION)

Because of the location in a temperate climate, significant amounts of ice do not form on the Tennessee Valley rivers and lakes. SQN is in no danger from ice flooding.

Flood waves from landslides into upstream reservoirs pose no danger because of the absence of major elevation relief in nearby upstream reservoirs and because the prevailing thin soils offer small slide volume potential compared to the available detention space in reservoirs.

2.4.8 Cooling Water Canals and Reservoirs (HISTORICAL INFORMATION)

2.4.8.1 Canals

The intake channel, as shown in Figure 2.1.2-1, referenced in paragraph 2.4.1.1, is designed for a flow of 2,250 cfs. At minimum pool (elevation 675), as shown in Figure 2.4.8-1, this flow is maintained at a velocity of 2.7 fps.

The protection of the intake channel slopes from wind-wave activity is afforded by the placement of riprap, shown in Figure 2.4.8-1, in accordance with TVA Design Standards, from elevation 665 to elevation 690. The riprap is designed for a wind velocity of 45 mph.

2.4.8.2 Reservoirs (HISTORICAL INFORMATION)

Chickamauga Reservoir provides the cooling water for SQN. This reservoir and the extensive TVA system of upstream reservoirs, which regulate inflows, are described in Table 2.4.1-1. The location in an area of ample runoff and the extensive reservoir system assures sufficient cooling waterflow for the plant.

2.4.9 Channel Diversions (HISTORICAL INFORMATION)

Channel diversion is not a potential problem for the plant. There are now no channel diversions upstream of SQN that would cause diverting or rerouting of the source of plant cooling water, and none are anticipated in the future. The floodplain is such that large floods do not produce major channel meanders or cutoffs. Carbon 14 dating of material at the high terrace levels shows that the Tennessee River has essentially maintained its present alignment for over 35,000 years. The topography is such that only an unimaginable catastrophic event could result in flow diversion above the plant.

2.4.10 Flooding Protection Requirements

Assurance that safety-related facilities are capable of surviving all possible flood conditions is provided by the discussions given in Paragraph 2.4.2.2, Section 3.4, Section 3.8, and Appendix 2.4A.

The plant is designed to be shutdown and remain in a safe shutdown condition for any rainfall flood exceeding plant grade, up to the "design basis flood" discussed in Subsection 2.4.3, and for lower, seismic-caused floods discussed in Subsection 2.4.4. Any rainfall flood exceeding plant grade will be predicted at least 27 hours in advance by TVA's Reservoir Operations. Warning of seismic failure of key upstream dams will be available at the plant at least 27 hours before a resulting flood surge would reach plant grade. Hence, there is adequate time to prepare the plant for any flood.

See Appendix 2.4A for a detailed presentation of the flood protection plan.

2.4.11 Low Water Considerations

Because of its location on Chickamauga Reservoir, maintaining minimum water levels at SQN is not a problem. The high rainfall and runoff of the watershed and the regulation afforded by upstream dams assure minimum flows for plant cooling.

2.4.11.1 Low Flow in Rivers and Streams

The targeted minimum water level at SQN is elevation 675, which corresponds to the lower bound of the winter operating zone for Chickamauga Reservoir. On rare occasions, the water level may be slightly lower (.1 or .2 tenths of a foot) for a brief period of time (hours) due to hydropower peaking operations at Chickamauga and Watts Bar Dams during the winter season. A minimum elevation of 675 must be maintained in order to provide the prescribed commercial navigation depth in Chickamauga Reservoir.

The “Preferred Alternative” Reservoir Operating Policy was designed to provide increased recreation opportunities while avoiding or reducing adverse impacts on other operating objectives and resource areas. Under the Preferred Alternative, TVA will no longer target specific summer pool elevations at 10 tributary storage reservoirs. Instead, TVA tends to manage the flow of water through the system to meet operating objectives. TVA will use weekly average system flow requirements to limit the drawdown of 10 tributary reservoirs (Blue Ridge, Chatuge, Cherokee, Douglas, Fontana, Nottely, Hiawassee, Norris, South Holston, and Watauga) June 1 through Labor Day to increase recreation opportunities. For four main stem reservoirs (Chickamauga, Guntersville, Wheeler, and Pickwick), summer operating zones will be maintained through Labor Day. For Watts Bar Reservoir, the summer operating zone will be maintained through November 1.

Weekly average system minimum flow requirements from June 1 through Labor Day, measured at Chickamauga Dam, are determined by the total volume of water in storage at the 10 tributary reservoirs compared to the seasonal total tributary system minimum operating guide (SMOG). If the

volume of water in storage is above the SMOG, the weekly average system minimum flow requirement will be increased each week from 14,000 cfs (cubic feet per second) the first week of June to 25,000 cfs the last week of July.

Beginning August 1 and continuing through Labor Day, the weekly average flow requirement will be 29,000 cfs. If the volume of water in storage is below the SMOG curve, 13,000 cfs weekly average minimum flows will be released from Chickamauga Dam between June 1 and July 31, and 25,000 cfs weekly average minimum flows will be released from August 1 through Labor Day.

Within these weekly averages, TVA has the flexibility to schedule daily and hourly flows to best meet all operating objectives, including water supply for TVA's thermal power generating plants. Flows may be higher than these stated minimums if additional releases are required at tributary or main river reservoirs to maintain allocated flood storage space or during critical power situations to maintain the integrity and reliability of the TVA power supply system.

In the assumed event of complete dam failure of the south embankment of Chickamauga Dam resulting in a breach width of 400 feet, with the Chickamauga pool at elevation 681, the water surface at SQN will begin to drop within one hour and will fall to elevation 641 about 60 hours after failure. TVA will begin providing steady releases of at least 14,000 cfs at Watts Bar within 12 hours of Chickamauga Dam failure to assure that the water level recession at SQN does not drop below elevation 641. The estimated minimum river flow requirement for the ERCW system is only 45 cfs.

Reference: Programmatic Environmental Impact Statement, TVA Reservoir Operations Study, Record of Decision, May 2004.

2.4.11.2 Low Water Resulting From Surges, Seiches, or Tsunamis

Because of its inland location on a relatively small, narrow lake, low water levels resulting from surges, seiches, or tsunamis are not a potential problem.

2.4.11.3 Historical Low Water

From the beginning of stream gauge records at Chattanooga in 1874 until the closure of Chickamauga Dam in January 1940, the lowest daily flow in the Tennessee River at SQN was 3,200 cfs on September 7 and 13, 1925. The next lowest daily flow of 4,600 cfs occurred in 1881 and also in 1883.

Since January 1942, low flows at the site have been regulated by TVA reservoirs, particularly by Watts Bar and Chickamauga Dams. Under normal operating conditions, there may be periods of several hours daily when there are no releases from either or both dams, but average daily flows at the site have been less than 5,000 cfs only 0.65 percent of the time and have been less than 10,000 cfs, 5.19 percent of the time.

On March 30 and 31, 1968, during special operations for the control of watermilfoil, there were no releases from either Watts Bar or Chickamauga Dams during the two-day period. The previous minimum daily flow was 700 cfs on November 1, 1953. TVA no longer conducts special operations for the control of water milfoil on Chickamauga Reservoir.

Since January 1940, water levels at the plant have been controlled by Chickamauga Reservoir. Since then, the minimum level at the dam was 673.3 on January 21, 1942. TVA no longer routinely conducts pre-flood drawdowns below elevation 675 at Chickamauga Reservoir and the minimum elevation in the past 20 years (1987 - 2006) was 674.97 at Chickamauga head water.

2.4.11.4 Future Control

Future added controls which could alter low flow conditions at the plant are not anticipated because no sites that would have a significant influence remain to be developed.

2.4.11.5 Plant Requirements

2.4.11.5.1 Two-Unit Operation

The safety related water supply systems requiring river water are: the essential raw cooling water (ERCW) (Subsection 9.2.2), and that portion of the high-pressure fire-protection system (HPFP) (Subsection 2.4A.4.1) supplying emergency feedwater to the steam generators. The fire/flood mode pumps are submersible pumps located in the CCW intake pumping station. The CCW intake pumping station sump is at elevation 648. The entrances to the suction pipes for the fire/flood mode pumps are at elevation 651 feet 0 inches which is 32 feet and 24 feet, respectively, below the maximum normal water elevation of 683.0 and the normal minimum elevation of 675.0 for the reservoir. Abnormal reservoir level is 670 feet with a technical specification limit of 674 ft. For flow requirements of the HPFP during engineering safety feature operation (Reference 22). The ERCW pump sump in this independent station is at elevation 625.0, which is 58.0' below maximum normal water elevation, 50.0' below minimum normal water elevation, and 16' below the 641' minimum possible elevation of the river.

Since the ERCW pumping station has direct communication with the river for all water levels and is above probable maximum flood, the ERCW system for two-unit plant operation always operates in an open cooling cycle.

2.4.11.6 Heat Sink Dependability Requirements

The ultimate heat sink, its design bases and its operation, under all normal and credible accident conditions is described in detail in Subsection 9.2.5. As discussed in Subsection 9.2.5, the sink was modified by a new essential raw cooling water (ERCW) pumping station before unit 2 began operation. The design basis and operation of the ERCW system, both with the original ERCW intake station and with the new ERCW intake station, is presented in Subsection 9.2.2. As described in these sections, the new ERCW station is designed to guarantee a continued adequate supply of essential cooling water for all plant design basis conditions. This position is further assured since additional river water may be provided from TVA's upstream multiple-purpose reservoirs, as previously discussed during Low Flow in Rivers and Streams.

2.4.11.6.1 Loss of Downstream Dam

The loss of downstream dam will not result in any adverse effects on the availability of water to the ERCW system or these portions of the original HPFP supplying emergency feedwater to the steam generator. Loss of downstream dam reduces ERCW flow about 7% to the component cooling and containment spray heat exchangers. ERCW flow does not decrease below that assumed in the analysis (analyzed as 670' to 639') until more than two hours after the peak containment temperature and pressure occurs. (See Section 6.2.1.3.4.)

2.4.11.6.2 Adequacy of Minimum Flow

The cooling requirements for plant safety-related features are provided by the ERCW system. The required ERCW flow rates under the most demanding modes of operation (including loss of downstream dam) as given in Subsection 9.2.2 are contained in TVA calculations and flow diagrams.

Two other safety-related functions may require water from the ultimate heat sink; these are fire protection water (refer to Subparagraph 2.4.11.6.3) and emergency steam generator feedwater (refer to Subsection 10.4.7). These two functions have smaller flow requirements than the ERCW systems. Consequently, the relative abundance of the river flow, even under the worst conditions, assures the availability of an adequate water supply for all safety-related plant cooling water requirements.

River operations methodology for maintaining UHS temperatures are discussed in “Monitoring and Moderating Sequoyah Ultimate Heat Sink,” Reference 21.

2.4.11.6.3 Fire-Protection Water

Refer to the Fire Protection Report discussed in Section 9.5.1.

2.4.12 Environmental Acceptance of Effluents

The ability of surface waters near SQN, located on the right bank near Tennessee River Mile (TRM) 484.5, to dilute and disperse radioactive liquid effluents accidentally released from the plant is discussed herein. Routine radioactive liquid releases are discussed in Section 11.2.

The Tennessee River is the sole surface water pathway between SQN and surface water users along the river. Liquid effluent from SQN flows into the river from a diffuser pond through a system of diffuser pipes located at TRM 483.65. An accidental, radioactive liquid effluent release from SQN would enter the Tennessee River after it reached the diffuser pond and entered the diffuser pipes. The contents of the diffuser pond enter the diffuser pipes and mix with the river flow upon discharge. The diffusers are designed to provide rapid mixing of the discharged effluent with the river flow. The flow through the diffusers is driven by the elevation head difference between the diffuser pond and the river [1](McCold 1979). Descriptions of the diffusers and SQN operating modes are given in Paragraph 10.4.5.2. Flow is discharged into the diffuser pond via the blowdown line, ERCW System (Subsection 9.2.2) and CCW System (Subsection 10.4.5). A layout of SQN is given in Figures 2.1.2-1 and 2.1.2-2. Two pipes comprise the diffuser system and are set alongside each other on the river bottom. They extend from the right bank of the river into the main channel. The main channel begins near the right bank of the river and is approximately 900 feet wide at SQN [1] (McCold, 1979). Each diffuser pipe has a 350-foot section through which flow is discharged into the river. The downstream diffuser leg discharges across a section 0 to 350 feet from the right bank of the main channel. The upstream diffuser leg starts at the end of the downstream diffuser leg and discharges across a section 350 to 700 feet from the right bank of the main channel. The two diffusers therefore provide mixing across nearly the entire main channel width.

The river flow near SQN is governed by hydro power operations of Watts Bar Dam upstream (TRM 529.9) and Chickamauga Dam downstream (TRM 471.0). The backwater of Chickamauga Dam extends to Watts Bar Dam. Peaking hydro power operations of the dams cause short periods of zero (i.e., stagnant) and reverse (i.e., upstream) flow near the plant. Effluent released from the diffusers during these zero and reverse flow periods will not concentrate near the plant or affect any water intake upstream. The maximum flow-reversal during 1978-1981 were not long enough to cause discharge from the diffusers to extend upstream to the SQN intake [2] (El-Ashry, 1983), which is the nearest intake and located at the right bank near TRM 484.7. Moreover, the warm buoyant discharge from the diffusers will tend toward the water surface as it mixes the river flow and away from the cooler, denser water found near the intake opening below the skimmer wall. The intake opening extends the first 10 feet above the riverbed elevation of about 631 feet mean sea level (MSL). The minimum flow depth at the intake is approximately 45 feet [3] (Ungate and Howerton, 1979). There are no other surface water users between the diffusers and this intake.

Subsection 2.4.13 discusses groundwater movement at SQN. Effluent released through the diffusers will have no impact on SQN groundwater sources along the banks of the river. Paragraph 2.2.3.8 discusses the effect on plant safety features from flammable or toxic materials released in the river near SQN.

The predominant transport and effect of a diffuser release is along the main channel and in the downstream direction. The nearest downstream surface water intake is located along the left bank at TRM 473.0 (Table 2.4.1-4).

A mathematical analysis is used to estimate the downstream transport and dilution of a contaminant released in the Tennessee River during an accidental spill at SQN. Only the main channel flow area without the adjacent overbank regions is considered in the analysis. The mathematical analysis of a potential spill scenario can involve: (1) a slug release, which can be modeled as an instantaneous release; (2) a continuous release, which can be modeled as a steady-state release; (3) a bank release, which can be modeled as a vertical line source; and (4) a diffuser release, which can be modeled either as a vertical line or plane source, depending on the width of the diffuser with respect to the channel width.

The following assumptions are used in the mathematical analyses to compute the minimum dilution expected downstream from SQN and, in particular, at the nearest water intake.

1. Mixing calculations are based on unstratified steady flow in the reservoir. River flow, Q, is assumed to be 27,474 cubic feet per second (cfs), which is equalled or exceeded in the reservoir approximately 50 percent of the time (Paragraph 2.4.1.2). Because various combinations of the upstream and downstream hydro power dam operations can create upstream flows past SQN, a minimum flow is not well defined. Larger (smaller) flows will decrease (increase) the travel time to the nearest intake but cause less than an order of magnitude change in the calculated dilution.

2. Because the SQN diffusers and the nearest downstream water intake are on opposite banks of the river, and the diffusers extend across most of the main channel width, an analysis using a diffuser release (rather than a bank release) is selected to yield a lesser (i.e., more conservative) dilution at the intake. Thus, the accidental spill is modeled as a vertical plane source across the width of the main channel.

3. The contaminant concentration profile from a slug release is assumed to be Gaussian (i.e., normal) in the longitudinal direction.

4. The contaminant is conservative, i.e., it does not degrade through radioactive decay, chemical or biological processes, nor is it removed from the reservoir by adsorption to sediments or by volatilization.

5. The transport of the contaminant is described using the motion of the river flow, i.e., the contaminant is neutrally buoyant and does not rise or sink due to gravity.

The main channel and dynamic, flow-dependent processes of the reservoir reach between SQN and the first downstream water intake are modeled as a channel of constant rectangular cross section with the following constant geometric, hydraulic and dispersion characteristics.

Longitudinal distance, x = 10.6 miles

Average water surface elevation = 678.5 feet MSL (Figure 2.4.1-3 (1))

Average width, W = 1175 feet

Average depth, H = 50 feet

Average velocity, U (= Q/(W H)) = 0.468 feet per second (fps)

Average travel time (for approximate peak contaminant), t (= x/U) = 1.4 days

Manning coefficient n (surface roughness) = 0.03

Longitudinal dispersion parameter, alpha = 200

where: alpha = E_x / (H u)

E_x = constant longitudinal dispersion coefficient (square feet per second)

u = shear velocity (fps) = $\sqrt{gRS}$

g = acceleration due to gravity = 32.174 ft/s^2

R = hydraulic radius (ft)

S = slope of the energy line (ft/ft)

The average width and depth were estimated from measurements of 9 cross sections in the reach [4] (TVA) [5] (TVA). For wide channels (i.e., large width-to-depth ratio), the hydraulic radius can be approximated as the average depth. The value of alpha = 200 is on the conservative (i.e., low) side [6] (Fischer, et al., 1979). The value of the Manning coefficient n is representative for natural rivers [7] (Chow, 1959).

The equation used to describe the maximum downstream activity (or concentration), C, at a point of interest due to an instantaneous plane source release of volume V is [8] (Guide 1.113):

$$\frac{C}{C_o} = \frac{V}{W H \sqrt{4 \pi E_x t}} \qquad (2.4.12\text{-}1)$$

where:

C_o = initial activity (or concentration) in the plant of the released contaminant

π = 3.14156

Any consistent set of units can be used on each side of Equation 2.4.12-1 (e.g., C and C_o in mCi/ml; V in cf; W and H in ft; E_x in ft^2/s; t in s).

The term, C/C_o, is the relative (i.e., dimensionless) activity (or concentration) and its reciprocal is the dimensionsless dilution factor. Equation 2.4.12-1 simplifies to C/C_o = 8.3E-10 * V (V expressed in cubic feet (cf)) when the parameters are substituted and the Manning equation [7] (Chow, 1959) is used in the definition of the shear velocity, u. In the substitution, u = 0.028 ft/s and E_x = 282.1 ft^2/s.

The equation used to describe the maximum downstream concentration at a point of interest due to a continuous plane source release rate, Q_s, where $Q_s << Q$, is [8] (Guide 1.113):

$$\frac{C}{C_o} = \frac{Q_s}{Q} \qquad (2.4.12\text{-}2)$$

Any consistent set of units can be used on each side of Equation 2.4.12-2 (e.g., C and C_o in mCi/ml; Q_s and Q in cfs).

Equation 2.4.12-2 simplifies to C/C_o = 3.64E-05 * Q_s (Q_s expressed in cfs) for Q = 27,474 cfs.

Examples of quantities and concentrations of potential contaminant releases and the use of Equations 2.4.12-1 and 2.4.12-2 follow. Because C_o is defined as the in-plant activity (or concentration) and not that of the diffuser release, an estimate of the dilution of liquid waste occurring in the diffuser pond and diffuser pipes is not needed. This is because the flow available for dilution in the plant (e.g., CCW and ERCW) is taken from and returned to the river. Only effluent extraneous to the river flow requires consideration in the analyses to calculate the dilution. More information on the possible means which liquid waste from the plant enters the diffuser pond is contained in Subsection 10.4.5.

The largest outdoor tanks whose contents flow into the diffuser pond are the two condensate storage tanks (Paragraph 11.2.3.1), which each have an overflow capacity of 398,000 gallons. Liquid waste that reaches the diffuser pond enters the Tennessee River through the diffuser system. The diffuser pond is approximately 2000 feet long and 500 feet wide with a depth that, although it depends on the Chickamauga Reservoir elevation, averages about 10 feet [9] (McIntosh, et al., 1982). The design flow residence time of the pond is approximately one hour (i.e., diffuser design flow is 2,480 cfs at maximum plant capacity [3] [Ungate and Howerton, 1979]).

For example, assume an instantaneous plane source release into the Tennessee River of the contents of one condensate storage drain tank. Assume the full 398,000 gallon (53,210 cf) volume contains Iodine-131 (I-131) at an activity of 1.5E-06 mCi/gm (Table 10.4.1-1). From Equation 2.4.12-1, the activity, C, at the first downstream water intake would be 6.6E-11 mCi/gm, which is within the acceptable limit [10] (CFR) for soluble I-131.

For a continuous plane source release, assume the contents of the 398,000 gallon (53,210 cf) floor drain tank leak out steadily over a 24-hour period. The effective release rate is 0.6 cfs at an activity of 1.5E-06 mCi/gm. The expected activity at the first downstream water intake would be 3.4E-11 mCi/gm using Equation 2.4.12-2 and is within the acceptable limit [10] (CFR) for soluble I-131.

REFERENCES (for Section 2.4.12 only)

[1] McCold, L. N. (March 1979), "Model Study and Analysis of Sequoyah Nuclear Plant Submerged Multiport Diffuser," TVA, Division of Water Resources, Water System Development Branch, Norris, TN, Report No. WR28-1-45-103.

[2] El-Ashry, Mohammed T., Director of Environmental Quality, TVA, February 1983 letter to Paul Davis, Manager, Permit Section, Tennessee Division of Water Quality Control, SEQUOYAH NUCLEAR PLANT---NPDES PERMIT NO. T0026450.

[3] Ungate, C. D., and Howerton, K. A. (April 1978; revised March 1979), "Effect of Sequoyah Nuclear Plant Discharges on Chickamauga Lake Water Temperatures," TVA, Division of Water Management, Water Systems Development Branch, Norris, TN, Report No. WR28-1-45-101.

[4] TVA, Chickamauga Reservoir Sediment Investigations, Cross Sections, 1940-1961, Division of Water Control Planning, Hydraulic Data Branch.

[5] TVA, Measured Cross Sections of Chickamauga Reservoir, 1972, Flood Protection Branch.

[6] Fischer, H. B., List, E. J., Koh, R.C.Y., Imberger, J., Brooks, N. H. (1979), Mixing in Inland and Costal Waters, Academic Press, New York.

[7] Chow, V. T. (1959) Open-Channel Hydraulics, McGraw-Hill, New York.

[8] United States Nuclear Regulatory Commission, Office of Standards Development, Regulatory Guide 1.113 (April 1977), "Estimating Aquatic Dispersion of Effluents from Accidental and Routine Reactor Releases for the Purpose of Implementing Appendix I," Revision 1.

[9] McIntosh, D. A., Johnson, B. E. and Speaks, E. B. (October 1982), "A Field Verification of Sequoyah Nuclear Plant Diffuser Performance Model: One-Unit Operation," TVA, Office of Natural Resources, Division of Air and Water Resources, Water Systems Development Branch, Norris, TN, Report No. WR28-1-45-110.

[10] 10 CFR Part 20, Appendix B, Table II, Column 2.

[11] TVA SQN Calculation SQN-SQS2-0242, SQN Site Iodine-131 Release Concentration in Tennessee River.

2.4.13 Groundwater (HISTORICAL INFORMATION)

2.4.13.1 Description and Onsite Use

The peninsula on which SQN is located is underlain by the Conasauga Shale, a poor water-bearing formation. About 2,000 feet northwest of the plant site, the trace of the Kingston Fault separates this outcrop area of the Conasauga Shale from a wide belt of Knox Dolomite. The Knox is the major water bearing formation of eastern Tennessee.

Groundwater in the Conasauga Shale occurs in small openings along fractures and bedding planes; these rapidly decrease in size with depth, and few openings exist below a depth of 300 feet. Groundwater in the Knox Dolomite occurs in solutionally enlarged openings formed along fractures and bedding planes and also in locally thick cherty clay overburden.

There is no groundwater use at SQN.

2.4.13.2 Sources

The source of groundwater at SQN is recharged by local, onsite precipitation. Discharge occurs by movement mainly along strike of bedrock, to the northeast and southwest, into Chickamauga Lake. Rises in the level of Chickamauga Lake result in corresponding rises in the water table and recharge along the periphery of the lake, extending inland for short distances. Lateral extent of this effect varies with local slope of the water table, but probably nowhere exceeds 500 feet. Lowering levels of Chickamauga Lake results in corresponding declines in the water table along the lake periphery, and short-term increase in groundwater discharge.

When SQN was initially evaluated in the early 1970s, it was in a rural area, and only a few houses within a two-mile radius of the plant site were supplied by individual wells in the Knox Dolomite (see Table 2.4.13-1, Figure 2.4.13-1). Because the average domestic use probably does

not exceed 500 gallons per day per house, groundwater withdrawal within a two-mile radius of the plant site was less than 50,000 gallons per day. Such a small volume withdrawal over the area would have essentially no effect on areal groundwater levels and gradients. Although development of the area has increased, public supplies are available and overall groundwater use is not expected to increase.

Public and industrial groundwater supplies within a 20 mile radius of the site in 1985 are listed in Table 2.4.13-2. The area groundwater gradient is towards Chickamauga Lake, under water table conditions, and at a gradient of less than 120 feet per mile. The water table system is shallow, the surface of which conforms in general to the topography of the land surface. Depth to water ranges from less than 10 feet in topographically low areas to more than 75 feet in higher areas underlain by Knox Dolomite. Figure 2.4.13-2 is a generalized water-table map of SQN, based on water level data from five onsite observation wells, and in private wells adjacent to the site in April 1973, and also based on surface resistivity measurements of depth to water table made in 1972.

Because permeability across strike in the Conasauga Shale is extremely low, and nearly all water movement is in a southwest-northeast direction, along strike, the Conasauga-Knox Dolomite Contact is a hydraulic barrier, across which only a very small volume of water could migrate in the event large groundwater withdrawals were made from the adjacent Knox.

Although some water can cross this boundary, the permeability normal to strike of the Conasauga is too low to allow development of an areally extensive cone of depression.

Groundwater recharge occurs to the Conasauga Shale at the plant site. Recharge water moves no more than 3,000 feet before being discharged to Chickamauga Lake.

2.4.13.3 Accident Effects

Design features in SQN further protect groundwater from contamination.

Category I structures in the SQN facility are designed to assure that all system components perform their designed function, including maintenance of integrity during earthquake.

Buildings in which radioactive liquids could be released due to the equipment failure, overflow, or spillage are designed to retain such liquids even if subject to an earthquake equivalent to the safe shutdown earthquake. Outdoor tanks that contain radioactive liquids are designed so that if they overflow, the overflow liquid is redirected to the building where the liquid is collected in the radwaste system. Two outdoor tanks that contain low concentrations of radioactivity at times overflow to yard drains which discharge into the diffuser pond. Overflow liquid is discharged near the discharge diffuser.

The capacity for dispersion and dilution of contaminants by the groundwater system of the Conasauga Shale is low. Dispersion would occur slowly because water movement is limited to small openings along fractures and bedding planes in the shale. Clay minerals of the Conasauga Shale do, however, have a relatively high exchange capacity, and some of the radioactive ions would be absorbed by these minerals. Any ions moving through the groundwater system eventually would be discharged to Chickamauga Lake.

The Conasauga Shale is heterogeneous and anisotropic vertically and horizontally. Water-bearing characteristics change abruptly within short distances. Standard aquifer analyses cannot be applied, and meaningful values for permeability, time of travel, or dilution factors cannot be obtained.

Bedrock porosity is estimated to be less than 3 percent based on examination of results of exploratory core drilling. It is known from experience elsewhere in this region that water movement in the Conasauga Shale occurs almost entirely parallel to strike. Subsurface movement of a liquid radwaste release at the plant site would be about 1,000 feet to the northeast or about 2,000 feet to the southwest before discharge to Chickamauga Lake.

Time of travel can only be estimated as being a few weeks for first arrival, a few months for peak concentration arrival, and perhaps two or more years for total discharge. The computed mean time of travel of groundwater from SQN to Chickamauga Lake is 303 days.

No radwaste discharge would reach a groundwater user. At the nearest point, the reservation boundary lies 2,200 feet northwest of the plant site, across strike. Groundwater movement will not occur from the plant site in this direction across this distance.

During initial licensing, the radionuclide concentrations were determined for both groundwater and surface water movement to the nearest potable water intake (Savannah Valley Utility District, which is no longer in service) and found to be of no concern (see Safety Evaluation Report, March 1979, Section 2.4.4 Groundwater).

2.4.13.4 Monitoring or Safeguard Requirements

SQN is on a peninsula of low-permeability rock; the groundwater system of the site is essentially hydraulically isolated and potential hazard to groundwater users of the area is minimal. The environmental radiological monitoring program is addressed in Section 11.6.

Monitor wells 1, 2, 3, and 4 were sampled and analyzed for radioactivity during the period from 1976 through 1978. Well 5 was not monitored because of insufficient flow. An additional well (Well 6) was drilled in late 1978 downgradient from the plant and a pump sampler installed.

Wells 1, 2, 4, and 5 are each 150 feet deep, Well 6 is 250 feet deep, and Wells L6 and L7 are 75-80 feet deep. All of the wells are cased in the residuum and open bore in the Conasauga Shale.

2.4.13.5 Conclusions

SQN was designed to provide protection of groundwater resources by preventing the escape of the leaks of radionuclides. Site soils and underlying geology provide further protection in that they retard the movement of water and attenuate any contaminants that would be released. All groundwater movement is toward Chickamauga Lake. The Knox Dolomite is essentially hydraulically separated from the Conasauga Shale; therefore, offsite pumping, including future development, should have little effect upon the groundwater table in the Conasauga Shale at the plant.

Even though the potential for accidental contamination of the groundwater system is extremely low, the radiological monitoring program will provide ample lead times to mitigate any offsite contamination.

As a consequence of the geohydrologic conditions that remain unchanged from evaluations conducted in the 1970s, the information in Chapter 2.4.13 Groundwater is historical and should not be subject to updating revisions.

2.4.14 Technical Requirements and Emergency Operation Requirements

Emergency flood protection plans, designed to minimize impact of floods above plant grade on safety-related facilities, are described in Appendix 2.4A. Procedures for predicting rainfall floods, arrangements to warn of upstream dam failure floods, and lead times available and types of action to be taken to meet related safety requirements for both sources of flooding are described therein. The Technical Requirements Manual specify the action to be taken to minimize the consequences of floods.

2.4.15 References

1. U.S. Weather Bureau, "Probable Maximum and TVA Precipitation Over The Tennessee River Basin Above Chattanooga," Hydrometeorological Report No. 41, 1965.

2. U.S. Weather Bureau, "Probable Maximum and TVA Precipitation for Tennessee River Basins Up To 3,000 Square Miles in Area and Duration to 72 Hours," Hydrometeorological Report No. 45, 1969.

3. Garrison, J. M., Granju, J. P., and Price, J. T., "Unsteady Flow Simulation in Rivers and Reservoirs," Journal of the Hydraulics Division, ASCE, Vol. 95, No. HY5, Proceedings Paper 6771, September 1969, pp. 15559-1576.

4. PSAR, Phipps Bend Nuclear Plant, Docket Nos. 50-553, 50-554.

5. Tennessee Valley Authority, "Flood Insurance Study, Hamilton County, Tennessee, (Unincorporated Areas)," Division of Water Resources, February 1979.

6. U.S. Army Engineering, Corps of Engineers, Omaha, Nebraska, "Severe Windstorms of Record," Technical Bulletin No. 2, Civil Works Investigations Project CW-178 Freeboard Criteria for Dams and Levees, January 1960.

7. U.S. Army Corps of Engineers, "Computation of Freeboard Allowances for Waves in Reservoirs," Engineering Engineer Technical Letter No. 1110-2-8, August 1966.

8. U.S. Army Coastal Engineering Research Center, "Shore Protection, Planning, and Design," 3rd Edition, 1966.

9. Reference removed per Amendment 6.

10. Hinds, Julian, Creager, William P., and Justin, Joel D., "Engineering For Dams," Vol. II, Concrete Dams, John Wiley and Sons, Inc., 1944.

11. Bustamante, Jurge I., Flores, Arando, "Water Pressure in Dams Subject to Earthquakes," Journal of the Engineering Mechanics Division, ASCE Proceedings, October 1966.

12. Chopra, Anil K., "Hydrodynamic Pressures on Dams During Earthquakes," Journal of the Engineering Mechanics Division, ASCE Proceedings, December 1967.

13. Zienkiewicz, O. C., "Hydrodynamic Pressures Due to Earthquakes," Water Power, Vol. 16, September 1964, pp. 382-388.

14. Tennessee Valley Authority, "Sedimentation in TVA Reservoirs," TVA Report No. 0-6693, Division of Water Control Planning, February 1968.

15. Reference removed per Amendment 6.

16. Cristofano, E. A., "Method of Computing Erosion Rate for Failure of Earthfill Dams," Engineering and Research Center, Bureau of Reclamation, Denver 1966.

17. "The Breaching of the Oros Earth Dam in the State of Ceara, North-East Brazil," Water and Water Engineering, August 1960.

18. NRC letter to TVA dated December 8, 1989, "Chickamauga Reservoir Sediment Deposition and Erosion - Sequoyah Nuclear Plant, Units 1 and 2."

19. Programmatic Environmental Impact Statement, TVA Reservoir Operations Study, Record of Decision, May 2004.

20. Updated Predictions of Chickamauga Reservoir Recession Resulting from Postulated Failure of the South Embankment at Chickamauga Dam; TVA River System Operations and Environment, Revised June 2004 (B85 070509 001).

21. Monitoring and Moderating Sequoyah Ultimate Heat Sink, June 2004, River System Operations and Environment, River Operations, River Scheduling (B85 070509 001).

22. SQN Calculation MDQ0026970001A, “High Pressure Fire Protection Supply to the Steam Generators for Flood Mode Operation.”

TABLE 2.4.1-1

FACTS ABOUT MAJOR TVA DAMS AND RESERVOIRS (HISTORICAL INFORMATION)

Main River Projects	River	State	Type of Dam (d)	Max. Height (Feet)	Length (Feet)	Drainage area above dam (sq. mi.)	Length of Lake (miles)	Area of Lake at Full Pool (acres)	Lake Elevation (feet above sea level)			Lake Volume (acre-feet)		Useful Controlled Storage (Ac-Ft)	Construction Started
									Ordinary Minimum	Top of Gates	Fall Pool (g)	Ordinary Minimum Elevation	Top of Gates Elevation		
Kentucky	Tenn.	Ky.	CGE	206	8,422	40,200	184.3	160,300	354	375	359	2,121,000	6,129,000	4,008,000	7-1-38
Pickwick Landing	Tenn.	Tenn.	CGE	113	7,715	32,820	52.7	43,100	408	418	414	688,000	1,105,000	417,000	3-8-35
Wilson (f)	Tenn.	Ala.	CG	137	4,535	30,750	15.5	15,500	504.5	507.88	507.5	582,000	641,000	59,000	4-14-18
Wheeler	Tenn.	Ala.	CG	72	6,342	29,590	74.1	67,100	550	556.3	556	720,000	1,071,000	351,000	11-21-33
Guntersville	Tenn.	Ala.	CGE	94	3,979	24,450	75.7	67,900	592	505.44	595	379.700	1,052,000	172,300	12-4-35
Nickajack (e)	Tenn.	Tenn.	CGE	83	3,767	21,870	46.3	10,900	632	635	634	221.600	254,600	33,000	4—54
Chickamauga	Tenn.	Tenn.	CGE	129	5,800	20,790	58.9	35,400	675	685.44	682.5	392.000	739.000	347,000	1-13-36
Watts Bar	Tenn.	Tenn.	CGE	112	2,960	17,310	72.4	39,000	735	745	741	796.000	1,175,000	379,000	7-1-39
Ft Loudon	Tenn.	Tenn.	CGE	122	4,190	9,550	55.0	14,600	807	815	813	282.000	393,000	111,000	7-8-40
TRIBUTARIES															
Tims Ford	Elk	Tenn.	E & R	170	1,470	529	34	10,700	860	895	888	294.000	617,000	323,000	3-28-66
Appalachia	Hiwassee	N.C.	CG	150	1,308	1,018	9.8	1,100	1,272	1,280	1,280	48.600	57,500	8,900	7-17-41
Hiwassee	Hiwassee	N.C.		307	1,376	968	22	6,090	1,415	1,528.5	1,524.5	71.800	434,000	362,200	7-15-36
Chatuga	Hiwassee	N.C.	E	144	2,850	189	13	7,050	1,860	1,928	1,927	18.400	240,500	222,100	7-17-41
Ocoee No. 1 (f)	Ocoee	Tenn.	CG	135	840	595	7.5	1,890	818.9	837.65	837.65	53.500	87,300	33,800	8—10
Ocoee No. 2 (f)	Ocoee	Tenn.	RFT	30	450	516	-----	-----	-----	1,115	1,115	-----	-----	-----	5---12
Ocoee No. 3	Ocoee	Tenn.	CG	110	612	496	7	621	1,112	1,425	1,435	790	4,650	3,860	7-17-41
Blue Ridge (f)	Toccoa	Ga.	E	167	1,000	232	10	3,290	1,590	1,691	1,690	12.500	196,500	184,000	11--25 (b)
Nettely	Nettely	Ga.	E & R	184	2,300	214	20	4,180	1,690	1,779	1,779	12.700	174,300	161,600	7-17-41
Melton Hill	Clinch	Tenn.	CG	103	1,020	3,343	44	5,690	790	796	795	94.500	126,000	31,500	9-6-60
Norris	Clinch	Tenn.	CGE	265	1,860	2,912	72	34,200	930	1,034	1,020	290,000	2,555,000	2,265,000	10-1-33
Tellico	Little T.	Tenn.	CGE	108	3,238	2,627	33.2	16,500	807	815	813	321,300	447,300	126,000	3-15-67
Fontana	Little T.	N.C.	CG	480	2,365	1,571	29	10,640	1,525	1,710	1,708	295,000	1,448,000	1,153,000	1-1-42
Douglas	French Bread	Tenn.	CGE	202	1,705	4,541	43.1	30,400	920	1,092	1,000	84,500	1,490,000	1,105,500	2-2-42
Cherokee	Holston	Tenn.	CGE	175	6,760	3,428	59	30,300	989	1,075	1,073	83,600	1,544,000	1,160,400	8-1-40
Fort Patrick Henry	S. Fork Holston	Tenn.	CG	95	737	1,903	10.3	872	1,258	1,263	1,263	22,700	26,900	4,290	5-14-51
Boone	S. ForkHolston	Tenn.	CGE	160	1,532	1,840	17.3	4,400	1,330	1,385	1,385	45,000	193.400	148,400	8-29-50
South Holston	S. Fork Holston	Tenn.	E & R	285	1,600	703	24.3	7,580	1,616	1,742	1,729	121.400	764.000	642,600	8-4-47 (c)
Watauga	Watauga		E & R	318	900	468	16.7	6,430	1,815	1,975	1,959	52,300	677,000	624,700	7-22-46 (c)
Great Falls (f) (in Cumberland Valley)	Caney Fork	Tenn.	CG	92	800	1,675	22	2,100	780	405.30	805.30	14,600	51,600	37,000	-15
TOTALS								638,353				8,621,490	23,732,359	15,110,860	
PUMPED STORAGE Racoon Mountain	Tenn.	Tenn.	E & R	230		---------	--------	520	1,530	-------	1,672	2,000	37,800	35,400	7-6-70

a. Foundation to operating deck.
b. Construction discontinued early in 1926; resumed in March 1929.
c. Initial construction started February 16, 1942; temporarily discontinued to conserve critical materials during war.
d. Abbreviations: CG - Concrete gravity dams. CGE - Concrete gravity with earth embankments. E - Earth fill. E&R - Earth and rock fill. RFT - Rock-filled timber.

e. Nickajack Dam replaced the old Hales Bar Dam 6 miles upstream.
f. Acquired: Wilson by transfer from U. S. Corps of Engineers in 1933; Ocoee No. 1, Ocoee No. 2, Blue Ridge, and Great Falls by purchase from TEP Co. In 1939. Subsequent to acquisition, TVA heightened and installed additional units at Wilson.
g. Full Pool Elevation is the normal upper level to which the reservoirs may be filled. Where storage space is available above this level, additional filling may be made as needed for flood control.

Table 2.4.1-2

FACTS ABOUT NON-TVA DAM AND RESERVOIR PROJECTS

(HISTORICAL INFORMATION)

ALCOA Projects	River	Drainage Area Sq. Miles	Miles Above Mouth	Maximum Height, Feet	Length Feet	Area of Lake, Acres	Length of Lake, Miles	Useful[a] Storage Acre-Feet	Construction Started
Major Dams									
Calderwood	Little Tenn	1,856	43.7	232	916	536	8	1,570	1928
Cheoah	Little Tenn	1,608	51.4	225	750	595	10	1,850	1916
Chilhowee	Little Tenn	1,976	33.6	91	1,373	1,690	8.9	6,564	1955
Nantahala	Nantahala	108	22.8	250	1,042	1,605	4.6	126,000	1930
Santeetlan	Cheoah	176	9.3	212	1,054	2,863	7.5	133,290	1926
Thorpe (Glenville)	West Fork Tuckasegee	36.7	9.7	150	900	1,462	4.5	67,100	1940
Minor Dams									
Bear Creek	East Fork Tuckasegee	75.3	4.8	215	740	476	4.6	4,536	1952
Cedar Cliff	East Fork Tuckasegee	80.7	2.4	165	600	121	2.4	698	1950
Mission (Andrews)	Hiwassee	292	106.1	50	390	61	1.46	157	1924
Queens Creek	Queens Creek	3.58	1.5	78	382	37	0.5	490	1947
Wolf Creek	Wolf Creek	15.2	1.7	180	810	176	2.2	6,909	1952
East Fork	East Fork Tuckasegee	24.9	10.9	140	385	39	1.4	906	1952
Tuckasegee	West Fork Tuckasegee	54.7	3.1	61	254	9	0.5	35	1949
Walters (Carolina P&L)	Pigeon	455	38.0	200	00000	870	340	5.5	20,500

[a.] Volume between elevations of top of gates and maximum drawdown.

Table 2.4.1-3

Flood Detention Capacity
TVA Projects Above Sequoyah Nuclear Plant

Storage Reserved for Flood Control in Acre - Feet*

	January 1		March 15		Summer	
Project	Elev. (Ft)	Storage	Elev. (Ft)	Storage	Elev. (Ft)	Storage
Tributary						
Douglas	940	1,251,000	958	1,021,300	994	237,500
Watauga	1940	223,000	1951.5	155,900	1959	108,500
South Holston	1702	290,200	1713	220,100	1729	106,100
Boone	1358	92,400	1369	60,400	1382.5	10,800
Cherokee	1030	1,011,800	1042	807,800	1071	118,100
Fontana	1644	580,000	1644	580,000	1703	73,400
Norris	985	1,473,000	1000	1,113,000	1020	512,000
Hiwassee	1465	270,200	1482	216,100	1521	35,000
Chatuge	1912	93,000	1916	73,300	1926	13,900
Nottely	1745	100,000	1755	79,100	1777	12,300
Tellico	809	92,000	809	92,000	813	32,000
Main River						
Fort Loudoun	809	85,700	809	85,700	813	30,000
Watts Bar	737	312,100	737	312,100	741	165,000
Total		5,874,400		4,816,800		1,454,600

* 2001 Conditions

Table 2.4.1-4

PUBLIC AND INDUSTRIAL SURFACE WATER SUPPLIES WITHDRAWN FROM THE 98.6 MILE REACH OF THE TENNESSEE RIVER BETWEEN DAYTON TENNESSEE AND MEADE CORP. STEVENSON ALA.

(HISTORICAL INFORMATION)

Plant Name	Use (MGD)	Location	Approximate Distance From Site (River Miles)	Type Supply
City of Dayton	1.780	TRM 503.8 R	19.1 (Upstream)	Municipal
Cleveland Utilities Board	5.030	TRM 499.4 L Hiwassee RM 22.9	37.6 (Upstream)	Municipal
Bowaters Southern Paper	80.000	TRM 499.4 L Hiwassee RM 22.7	37.4 (Upstream)	Industrial & Potable
Hiwassee Utilities	3.000	TRM 499.4 L Hiwassee RM 22.5	37.2 (Upstream)	Municipal
Olin Corporation	5.000	TRM 499.4 L Hiwassee RM 22.3	37.0 (Upstream)	Industrial & Potable
Soddy-Daisy Falling Water U.D.	0.927	TRM 487.2 R Soddy Cr. 4.6 Plus 2 Wells	7.1 (Upstream)	Municipal
Sequoyah Nuclear Plant	1615.680	TRM 484.7 R	0.0	Industrial
East Side Utility	5.000	TRM 473.0 L	11.7 (Downstream)	Municipal
Chickamauga Dam	#	TRM 471.0	13.7 (Downstream)	Industrial
DuPont Company	7.200	TRM 469.9 R	14.8 (Downstream)	Industrial
Tennessee-American Water	40.930	TRM 465.3 L	19.4 (Downstream)	Municipal
Rock-Tennessee Mill	0.510	TRM 463.5 R	21.2 (Downstream)	Industrial
Dixie Sand and Gravel	0.035	TRM 463.2 R	21.5 (Downstream)	Industrial
Chattanooga Missouri Portland Cement	0.100	TRM 456.1 R	28.6 (Downstream)	Industrial
Signal Mountain Cement	2.800	TRM 454.2 R	30.5 (Downstream)	Industrial
Racoon Mount. Pump Stor.	0.561	TRM 444.7 L	40.0 (Downstream)	Industrial
Signal Mountain Cement	0.200	TRM 433.3 R	51.4 (Downstream)	Industrial
Nickajack Dam	#	TRM 424.7	60.0 (Downstream)	Industrial
South Pittsburg	0.900	TRM 418.0 R	66.7 (Downstream)	Municipal
Penn Dixie Cement	0.00001	TRM 417.1 R	67.6 (Downstream)	Industrial
Bridgeport	0.600	TRM 413.6 R	71.1 (Downstream)	Municipal
Widows Creek Stream Plant	397.440	TRM 407.7 R	77.0 (Downstream)	Industrial
Mead Corporation	4.400	TRM 405.2 R	79.5 (Downstream)	Industrial

Water usage is not metered

TABLE 2.4.1-5

DAM SAFETY MODIFICATION STATUS (HYDROLOGIC)

DAM	*DAM MODIFICATION	Year Completed
Main River Dams		
Fort Loudon-Tellico	Fort Loudon Dam embarkment was raised 3.25 with a concrete wall to elevation 833.25. A 2000-foot uncontorolled spillway with crest at elevation 817 was added at Tellico Dam.	1989
Watts Bar	Embankment of main dam was raised 10 feet with earthfill/concrete wall to elevation 767. West Saddle Dike was not modified. Top of saddle dike remains at elevation 757.	1997
Nickajack	South embankment was raised 5 feet with earthfill/concrete wall to elevation 657. A 1900-foot roller-compacted concrete overflow dam with top at elevation 634 was added below the north embankment.	1992
Guntersville	Embankments were raised 7.5 feet with earthfill and concrete walls to elevation 617.5.	1996

TABLE 2.4.1-5

Sheet 2 of 2

DAM SAFETY MODIFICATION STATUS (HYDROLOGIC)

DAM	*DAM MODIFICATION	Year Completed
Tributary Dams		
Little Bear Creek	Embankment was raised 4.5 feet.	1998
Beech	Embankment was raised 4.5 feet with earthfill to elevation 475.5.	1992
Blue Ridge	Three (3) additional spillway bays were added in 1982. Embankment was raised 7 feet with earthfill/concrete wall to elevation 1713, and a 320-foot uncontrolled spillway with crest at elevation 1691 was added in 1995.	1995
Boone	Embankment was raised 8.5 feet with earthfill to elevation 1408.5.	1984
Cedar Creek	Embankment was raised 5.5 feet with concrete wall to elevation 605.	1997
Chatuge	Embankment was raised 6.5 feet with earthfill to elevation 1946.5.	1986
Cherokee	A portion (600 feet) of the non-overflow dam was raised 7.75 feet to elevation 1089.75.	1982
Douglas	A portion of the non-overflow dam was raised 13.5 feet to elevation 1022.5, and eight saddle dams were raised 6.5 feet with earthfill to elevation 1023.5.	1988
Nottely	Embankment was raised 13.5 feet with rockfill to elevation 1807.5	1988
Upper Bear Creek	Embankment was raised 4 feet with concrete wall to elevation 817.	1997
Watauga	Embankment was raised 10 feet with rockfill to elevation 2012.	1983
Fontana	Dam post-tensioned.	1988
Melton Hill	Dam post-tensioned.	1988

* These dam safety modifications enable these projects to safely pass the probable maximum flood (PMF).
Note: Plans are to armor the embankment at Chickamauga and Bear Creek Dams to permit overtopping.

Table 2.4.3-1 (Sheet 1)

PROBABLE MAXIMUM STORM RAINFALL AND PRECIPITATION EXCESS

Index No.	Area	Antecedent Storm Rain, Inches	Antecedent Storm P_e,[a] Inches	Main Storm Rain, Inches	Main Storm P_e,[b] Inches
1.	Asheville	6.44	2.99	17.40	14.72
2.	Newport, French Broad	6.44	4.04	18.50	16.51
3.	Newport, Pigeon	6.44	4.04	19.30	17.31
4.	Embreeville	6.44	4.04	15.10	13.11
5.	Nolichucky Local	6.44	4.04	15.50	13.51
6.	Douglas Local	6.44	4.86	17.10	15.88
7.	Little Pigeon River	6.44	4.04	20.90	18.91
8.	French Broad Local	6.44	4.19	18.60	16.81
9.	South Holston	6.44	4.52	12.30	10.70
10.	Watauga	6.44	4.04	13.30	11.31
11.	Boone Local	6.44	4.04	14.10	12.11
12.	Fort Patrick Henry	6.44	4.86	14.40	13.18
13.	Gate City	6.44	4.86	12.30	11.08
14.	Surgoinsville Local	6.44	4.86	14.60	13.38
15.	Cherokee Local below Surgoinsville	6.44	4.86	15.80	14.58
16.	Holston River Local	6.44	4.52	17.10	15.50
17.	Little River	6.44	4.04	21.50	19.51
18.	Fort Loudoun Local	6.44	4.04	17.60	15.61
19.	Needmore	6.44	2.99	21.20	18.52
20.	Nantahala	6.44	2.99	21.50	18.82
21.	Bryson City	6.44	2.99	19.10	16.42
22.	Fontana Local	6.44	2.99	20.70	18.02
23.	Little Tennessee Local - Fontana to Chilhowee Dam	6.44	2.99	24.00	21.32
24.	Little Tennessee Local - Chilhowee to Tellico Dam	6.44	4.04	21.00	19.01
25.	Watts Bar Local above Clinch River	6.44	4.04	15.80	13.81
26.	Norris Dam	6.44	4.86	13.80	12.58
27.	Coal Creek	6.44	4.52	14.60	13.19
28.	Clinch Local	6.44	4.52	14.90	13.49
29.	Hinds Creek	6.44	4.52	15.30	13.89
30.	Bullrun Creek	6.44	4.68	15.70	14.29

Table 2.4.3-1 (Sheet 2)
(Continued)

PROBABLE MAXIMUM STORM RAINFALL AND PRECIPITATION EXCESS

Index No.	Area	Antecedent Storm Rain, Inches	Antecedent Storm P_e,[a] Inches	Main Storm Rain, Inches	Main Storm P_e,[b] Inches
31.	Beaver Creek	6.44	4.52	16.10	14.69
32.	Clinch Local (5 areas)	6.44	4.52	15.30	13.89
33.	Local above mile 16	6.44	4.52	15.30	13.89
34.	Poplar Creek	6.44	4.52	14.90	13.49
35.	Emory River	6.44	4.52	13.10	11.69
36.	Local Area at Mouth	6.44	4.52	14.90	13.49
37.	Watts Bar Local below Clinch River	6.44	4.52	14.40	12.99
38.	Chatuge	6.44	2.99	21.40	18.72
39.	Nottely	6.44	2.99	19.10	16.42
40.	Hiwassee Local	6.44	2.99	18.90	16.22
41.	Apalachia	6.44	2.99	17.90	15.22
42.	Blue Ridge	6.44	2.99	22.10	19.42
43.	Ocoee No. 1, Blue Ridge to Ocoee No. 1	6.44	4.04	18.30	16.31
44.	Lower Hiwassee	6.44	4.19	15.20	13.41
45.	Chickmauga Local	6.44	4.52	14.50	13.09
	Average above Watts Bar Dam	6.44	4.20	16.34	14.56
	Average above Chickamauga Dam	6.44	4.14	16.46	14.63

a. Adopted API prior to antecedent storm, 1.0 inch.
b. Computed API prior to main storm, 3.65 inches.

Table 2.4.3-2
UNIT HYDROGRAPH DATA

Unit AREA	Name	Drain Area, Sq. Miles	Duration, Hours	Q_p	C_p	T_p	W_{50}	W_{75}	T_B
1	French Broad River at Asheville	945	6	15,000	.27	14	35	12	166
2	French Broad River, Newport to Asheville	913	6	35,000	.53	12	12	7	108
3	Pigeon River at Newport[a]	666	6	26,600	.56	12	11	6	78
4	Nolichucky River at Embreeville	805	6	27,300	.58	14	14	9	82
5	Nolichucky Local	378	6	10,600	.40	12	16	9	87
6	Douglas Local[a]	832	6	47,930	.27	6	8	6	60
7	Little Pigeon River at Sevierville	353	6	15,600	.62	12	10	6	102
8	French Broad River Local[b]	207	6	7,500	.51	12	11	8	60
9	South Holston	703	6	16,000	.53	18	24	17	100
10	Watauga[b]	468	6	17,700	.53	12	13	7	84
11	Boone Local[a]	669	6	22,890	.16	6	13	8	90
12	Fort Patrick Henry	63	6	3,200	.40	8	8	6	64
13	North Fork Holston River near Gate City[a]	672	6	12,260	.60	24	33	25	108
14	Surgoinsville Local[b]	299	6	10,280	.48	12	13	9	66
15	Cherokee Local below Surgoinsville[b]	554	6	18,750	.48	12	14	7	66
16	Holston River Local[b]	289	6	6,800	.55	18	22	15	96
17	Little River at Mouth[b]	379	4	11,730	.68	16	14	8	96
18	Fort Loudoun Local[b]	323	6	20,000	.29	6	10	6	36
19	Little Tennessee River at Needmore	436	6	9,130	.49	18	23	12	126
20	Nantahala	91	6	3,770	.45	10	12	7	70
21	Tuckasegee River at Bryson City	655	6	26,000	.43	10	12	7	58
22	Fontana Local	389	6	16,350	.46	10	9	5	94
23	Little Tennessee River Local, Fontana-Chilhowee[b]	406	6	16,900	.58	12	9	5	84
24	Little Tennessee River Local Chilhowee-Tellico Dam[b]	650	6	17,000	.61	18	21	11	72
25	Watts Bar Local above Clinch River[b]	293	6	11,300	.30	8	9	7	84
26	Norris Dam	2912	6	43,300	.07	6	15	8	118
27	Coal Creek[b]	36.6	2	2,150	.64	8	9	5	40
28	Clinch Local[b]	22.25	2	1,350	.10	2	8	5	34
29	Hinds Creek[b]	66.4	2	3,620	.68	9	7	5	54
30	Bull Run Creek[b]	104	2	2,400	.47	14	21	14	84
31	Beaver Creek[b]	90.5	2	2,600	.58	14	14	10	88
32	Clinch Locals (5 areas)[b]	111.25	2	1,350	.10	2	8	5	34
33	Local above mi. 16[b]	37	2	4,490	.95	6	4	3	46
34	Poplar Creek[b]	136	2	2,800	.61	20	25	13	88
35	Emory River at Mouth[b]	865	6	34,000	.37	9	13	8	87
36	Local area at Mouth[b]	32	2	3,870	.95	6	3	2	46
37	Watts Bar Local below Clinch River[b]	427	6	16,300	.36	9	9	7	84
38	Chatuge Dam[a]	189	6	13,570	.34	6	6	5	54
39	Nottely Dam[a]	215	6	13,500	.29	6	5	4	80
40	Hiwassee Local	564	6	13,800	.36	12	18	12	124
41	Apalachia Local	50	6	2,900	.54	9	6	4	90
42	Blue Ridge Dam[a]	232	6	11,920	.24	6	7	4	54
43	Ocoee No. 1 to Blue Ridge[b]	363	6	17,000	.37	8	11	7	36
44	Lower Hiwassee	1087	6	32,500	.93	23	16	10	136
45	Chickamauga Local[a]	780	6	32,000	.38	9	14	7	36

Definition of Symbols

Q_p = Peak discharge in cfs
C_p = Snyder coefficient
T_p = Time in hours from beginning of precipitation excess to peak of unit hydrograph
W_{50} = Width in hours at 50 percent of peak discharge
W_{75} = Width in hours at 75 percent of peak discharge
T_B = Base length in hours of unit hydrograph
a = Revised
b = New

Table 2.4.4-1

FLOODS FROM POSTULATED SEISMIC FAILURES OF UPSTREAM DAMS
Plant Grade is Elevation 705

One-Half SSE Failures With One-Half Probable Maximum Flood	Elevation
1. Norris [a, b]	698.1
2. Fontana [b, c, d, e]	702.8
3. Cherokee-Douglas [b, f]	701.1
4. Fontana-Hiwassee-Apalachia-Blue Ridge [b, e]	707.9
SSE Failures With 25-Year Flood	
5. Norris-Cherokee-Douglas [g , h]	706.0
6. Douglas-Fort Loudoun-Tellico [b]	699.3

a. Melton Hill fails from failure wave.

b. Watts Bar West Saddle Dike fails from failure wave.

c. Includes failure of five Alcoa dams - Nantahala upstream, Santeetlah on a downstream tributary; and Cheoah, Calderwood and Chilhowee downstream.

d. Fort Loudoun gates fail in open position.

e. Tellico fails from failure wave.

f. Failure wave overtops but does not fail Fort Loudoun.

g. Fort Loudoun gates blocked in closed position from failure of bridge. Failure wave would overtop and breach Watts Bar West Saddle Dike.

h. Failure wave overtops and fails Fort Loudoun.

Table 2.4.13-1 (Sheet 1)

WELL AND SPRING INVENTORY
WITHIN 2-MILE RADIUS OF SEQUOYAH NUCLEAR PLANT SITE

(HISTORICAL INFORMATION)

Map Ident. No.	Location Latitude	Longitude	Well Depth, Feet	Estimated Elevation, Feet Ground	Water Surface	Well Dia., Feet	Remarks
1	35°13'34"	85°06'09"	--	725	--	.5	Serves 2 families; submersible
2	35°13'23"	85°06'12"	75	720	685	.5	Submersible pump
3	35°13'30"	85°06'47"	116	745	--	.5	Submersible pump
4	35°13'58"	85°05'45"	42	700	696	3.0	
5	35°14'15"	85°06'25"	--	680	--	.5	1/4-hp pump
6	35°14'34"	85°06'46"	85	720	--	15	Submersible pump
7	35°14'35"	85°06'52"	65	720	670	2.5	3/4-hp pump
8	35°14'36"	85°06'57"	73	735	687	.5	1/3-hp pump
9	35°15'06"	85°06'32"	27	780	761	5.0	Bucket
10	35°14'46"	85°06'16"	110	720	--	.5	Submersible
11	35°14'55"	85°06'15"	--	725	--	-	
12	35°14'53"	85°06'13"	77	800	--	.5	
13	35°14'52"	85°06'13"	--	800	--	-	Summer home
14	35°14'50"	85°06'12"	--	800	--	-	Summer home
15	35°14'45"	85°06'14"	50	720	680	.5	
16	35°14'44"	85°06'18"	275	795	525	.5	1-hp submersible pump
17	35°14'45"	85°06'22"	--	740	--	.5	1-hp pump
18	35°14'21"	85°05'30"	--	695	--	-	
19	35°14'26"	85°05'27"	200	695	--	.5	1-hp pump
20	35°14'34"	85°05'29"	150	695	--	.5	1/2-hp pump
21	35°14'31"	85°05'29"	--	695	--	.5	
22	35°14'29"	85°05'29"	110	690	--	.5	1-hp pump
23	35°14'23"	85°05'32"	85	700	--	.75	1-hp jet pump
24	35°14'22"	85°05'40"	--	695	--	.5	Serves 2 familes; 1-hp pump
25	35°14'24"	85°05'46"	52	710	680	.5	3/4-hp pump
26	35°14'28"	85°05'45"	130	740	620	.5	
27	35°14'26"	85°05'41"	90	740	710	.5	
28	35°14'32"	85°05'44"	141	740	650	.5	
29	35°14'34"	85°05'44"	--	735	--	-	Summer home
30	35°14'38"	85°05'41"	58	700	670	.5	1/3-hp pump
31	35°14'41"	85°05'41"	--	720	--	.5	
32	35°14'45"	85°05'46"	--	715	--	-	
33	35°14'43"	85°05'47"	--	720	--	-	
34	35°14'41"	85°05'48"	--	695	--	-	Summer home
35	35°14'39"	85°05'50"	48	695	650	.5	1-hp pump
36	35°14'39"	85°05'53"	60	700	--	.5	Submersible pump
37	35°14'40"	85°05'58"	--	695	653	.5	1-hp pump
38	35°14'41"	85°05'56"	50	695	655	.5	3/4-hp pump
39	35°14'35"	85°05'54"	--	700	--	-	Summer home
40	35°14'36"	85°05'57"	--	700	--	-	
41	35°14'37"	85°06'01"	--	715	--	-	Summer home
42	35°14'33"	85°05'02"	223	720	530	.5	

NOTE: The information in this table is historic and not subject to updating revisions.

Table 2.4.13-1 (Sheet 2)
(Continued)

WELL AND SPRING INVENTORY
WITHIN 2-MILE RADIUS OF SEQUOYAH NUCLEAR PLANT SITE

(HISTORICAL INFORMATION)

Map Ident. No.	Location Latitude	Longitude	Well Depth, Feet	Estimated Elevation, Feet Ground	Water Surface	Well Dia., Feet	Remarks
43	35°14'46"	85°05'54"	65	695	655	.5	3/4-hp pump
44	35°14'47"	85°05'54"	95	705	655	.5	
45	35°14'48"	85°05'53"	--	700	--	-	Summer home
46	35°14'50"	85°05'53"	257	695	665	.5	1-hp submersible pump
47	35°14'52"	85°05'48"	--	710	--	-	Summer home
48	35°15'04"	85°05'56"	--	725	--	-	Summer home
49	35°15'06"	85°06'02"	--	720	--	-	Summer home
50	35°15'06"	85°06'05"	90	705	625	.5	Submersible pump
51	35°14'58"	85°06'06"	--	695	--	-	Summer home
52	35°15'01"	85°06'02"	65	720	680	.5	3/4-hp pump
53	35°14'47"	85°05'57"	46	700	670	.5	2 familes; 1-hp pump
54	35°14'42"	85°06'01"	48	695	675	.5	1/2-hp pump
55	35°14'41"	85°06'02"	--	695	--	-	Summer home
56	35°14'40"	85°06'03"	--	695	--	-	Summer home
57	35°14'37"	85°06'08"	155	690	670	.5	1-hp pump
58	35°14'34"	85°06'09"	--	695	--	-	
59	35°14'23"	85°05'53"	--	760	--	.5	Submersible pump
60	35°14'49"	85°05'58"	--	705	--	-	
61	35°13'01"	85°04'41"	--	720	--	-	Summer home
62	35°13'18"	85°04'24"	--	845	--	.5	1-hp pump
63	35°13'19"	85°04'23"	206	845	645	.5	1/2-hp pump
64	35°13'33"	85°04'19"	50	720	680	.5	1-hp pump
65	35°13'49"	85°04'14"	100	720	640	.5	Servies clubhouse, 15 houses
66	35°13'57"	85°03'55"	175	741	--	.6	1-hp pump
67	35°13'53"	85°03'49"	100	738	690	.5	1-hp submersible pump
68	35°13'50"	85°03'52"	133	720	675	.5	1/2-hp pump
69	35°13'48"	85°03'43"	85	736	--	.5	1-hp pump
70	35°13'43"	85°03'38"	80	780	--	.5	1-hp pump
71	35°13'37"	85°03'36"	130	800	715	.5	1-hp pump
72	35°13'38"	85°03'43"	--	800	--	-	Well not used
73	35°13'16"	85°03'30"	227	880	680	.5	Submersible pump
74	35°13'09"	85°03'41"	397	900	820	.5	2-hp pump
75	35°12'47"	85°03'58"	190	860	800	.5	Serves 2 families; submersible
76	35°13'03"	85°04'17"	--	720	--	-	Summer home
77	35°13'05"	85°04'10"	90	740	670	.5	1/2-hp pump
78	35°12'50"	85°04'13"	85	760	--	.5	1-hp pump
79	35°12'45"	85°03'59"	190	880	--	.5	Serves 2 families; 1-hp pump
80	35°12'26"	85°04'07"	290	860	--	.5	Serves 5 families; submersible

NOTE: The information in this table is historic and not subject to updating revisions.

Table 2.4.13-1 (Sheet 3)
(Continued)

WELL AND SPRING INVENTORY
WITHIN 2-MILE RADIUS OF SEQUOYAH NUCLEAR PLANT SITE

(HISTORICAL INFORMATION)

Map Ident. No.	Location Latitude	Longitude	Well Depth, Feet	Estimated Elevation, Feet Ground	Water Surface	Well Dia., Feet	Remarks
81	35°12'20"	85°04'33"	265	940	--	.5	Submersible pump
82	35°12'15"	85°04'34"	250	965	735	.5	1-hp submersible pump
83	35°12'24"	85°04'35"	305	965	665	.5	Submersible pump
84	35°12'22"	85°05'05"	135	740	690	.5	1-hp pump
85	35°12'21"	85°05'08"	120	740	--	.5	Serves 2 families; 3/4-hp jet pump
86	35°12'17"	85°05'06"	190	800	--	.5	3/4-hp submersible pump
87	35°12'23"	85°05'09"	--	740	--	.5	1-hp pump
88	35°12'16"	85°05'12"	55	740	720	2.5	Bucket
89	35°12'07"	85°05'09"	251	775	700	.5	Serves 2 families; 3/4-hp pump
90	35°11'54"	85°04'56"	170	980	--	.5	1/2-hp pump
91	35°12'19"	85°05'20"	125	740	705	.5	Submersible pump
92	35°12'22"	85°05'33"	--	725	--	-	Summer home
93	35°12'22"	85°05'35"	--	700	--	-	1-hp pump
94	35°12'22"	85°05'36"	--	705	--	-	Summer home
95	35°12'20"	85°05'44"	--	700	--	-	Summer home
96	35°12'04"	85°05'56"	160	700	--	.5	Serves 5 families; 1-hp pump
97	35°12'04"	85°05'59	65	700	--	.5	House and cottage; 1-hp pump

NOTE: The information in this table is historic and not subject to updating revisions.

Table 2.4.13-2 (Sheet 1)

GROUND WATER SUPPLIES WITHIN 20-MILE RADIUS OF THE PLANT SITE

(HISTORICAL INFORMATION)

	Location	Owner	Average Daily Use mgd	Source	Approximate Distance From Site[a] (Miles)
1.	Chattanooga	Kay's Ice Cream Company	0.0400	Well	20.4
2.	Chattanooga	Selox, Inc.	0.0250	Well	21.0
3.	Chattanooga	Stainless Metal Products	0.0100	Well	16.4
4.	Chattanooga	American Cyanamid	0.0727	Well	21.0
5.	Chattanooga	Dixie Yarns, Inc.	0.5350	Wells (2) and Tennessee-American Water Company	13.3
6.	Chattanooga	Scholze Tannery	0.1560	Wells (2) and Tennessee-American Water Company	24.0
7.	Chattanooga	Southern Cellulose Products, Inc.	4.0000 0.1000	Well (1) and Tennessee-American Water Company	24.2
8.	Chattanooga	Alco Chemical Corporation	0.2300	Well (1) and Tennessee-American Water Company	--
9.	Chattanooga	Chattem Drug and Chemical	0.8500 0.2380	Wells (3) and Tennessee-American Water Company	24.0
10.	Chattanooga	Cumberland Corporation	0.2380 0.0150	Well (1) and Tennessee-American Water Company	17.4
11.	Chattanooga	Bacon Trailer Park		Well	--
12.	Dunlap	Bethel Church of Christ		Well	20.0
13.	Dayton	Blue Water Trail and Campground		Well	19.0
14.	Cleveland	Cohulla Baptist Church		Well	9.5
15.	Dayton	Crystal Springs Recreation Area		Spring	19.0
16.	Georgetown	Eastview School		Well	9.5
17.	Dayton	Fort Bluff Youth Camp		Well	19.0
18.	Dayton	Frazier Elementary School		Well	19.0
19.	Birchwood	Grasshopper Church of God		Well	11.3

NOTE: The information in this table is historic and not subject to updating revisions.

Table 2.4.13-2 (Sheet 2)

GROUND WATER SUPPLIES WITHIN 20-MILE RADIUS OF THE PLANT SITE

(HISTORICAL INFORMATION)

	Location	Owner	Average Daily Use mgd	Source	Approximate Distance From Site[a] (Miles)
20.	Dayton	Hastings Mobile Home Park		Spring	19.0
21.	Ooltewah	High Point Baptist Church		Well	10.0
22.	Dayton	Lake Richland Apartments		Well	19.0
23.	Dayton	Laurelbrook Sanitarium School	.017	Wells (7)	19.0
24.	Cleveland	Labanon Baptist Church		Well	13.5
25.	Cleveland	Mt. Carmel Baptist Church		Well	13.5
26.	Sale Creek	Mt. Vernon Baptist Church		Well	11.0
27.	Dayton	Mt. Vista Mobile Home Park		Wells (2)	19.0
28.	Dayton	New Bethel Methodist Church		Well	19.0
29.	Cleveland	New Friendship Baptist Church		Well	13.5
30.	Dayton	Ogden Baptist Church		Well	19.0
31.	Dunlap	Old Union Water System		Spring	20.0
32.	Dunlap	P.A.W., Inc. #2		Well	20.0
33.	Cleveland	Red Clay State Historic Area		Well	13.5
34.	Chattanooga	Riverside Catfish House		Well	25.0
35.	Cleveland	Robert Allen		Well	13.5
36.	Dayton	Salem Baptist Church		Well	19.0
37.	Dunlap	Sequatchie-Bledsoe VO-Training		Well	20.0
38.	Dayton	Seventh Day Adventist Church		Well	19.0
39.	Chattanooga	Shamrock Motel		Well	20.1
40.	Dayton	Sinclair Packing House		Well	19.0
41.	Dunlap	Stonecave Institute Water System	0.0064	Spring	20.0
42.	Dunlap	Old Union Water System		Spring	20.0
43.	Sale Creek	Sale Creek Marina Multiboating		Well	11.0

NOTE: The information in this table is historic and not subject to updating revisions.

Table 2.4.13-2 (Sheet 3)

GROUND WATER SUPPLIES WITHIN 20-MILE
RADIUS OF THE PLANT SITE

(HISTORICAL INFORMATION)

	Location	Owner	Average Daily Use mgd	Source	Approximate Distance From Site[a] (Miles)
44.	Sale Creek	Sale Creek P.U.A. - TVA		Well	11.0
45.	Sale Creek	Sale Creek Utility District	0.204	Wells (2)	10.8
46.	Graysville	Graysville Water Supply	0.220	Wells (2)	15.0
47.	Graysville	Graysville Nursing Home		Well	15.0
48.	Dayton	Dayton Golf & CC % Mokas		Well	19.0
49.	Birchwood	Birchwood School		Well	11.3
50.	Cleveland	Cassons Grocery Water System	0.0170	Well	19.7
51.	Cleveland	Black Fox School		Well	13.5
52.	Cleveland	Blue Springs Baptist Church		Well	13.5
53.	Cleveland	Blue Springs School		Well	13.5
54.	Cleveland	Bradley Limestone, Div. of Dalton Rock Product Co.	0.2400	Well	13.5
55.	Cleveland	Hardwick Stone Company	0.1130	Well	13.5
56.	Cleveland	Cleveland-Tenn. Enamel	0.2240	Well	13.5
57.	Cleveland	Magic Chef, Inc.	0.4200	Spring	13.5
58.	Hamilton County	Savannah Valley U.D.	0.720	Wells (2)	5.0
59.	Hamilton County	Eastside Utility District	3.0130 0.0920	Wells (3) and Tennessee American Water Company	7.9
60.	Hamilton County	Hixson Utility District	4.0000 0.3330	Cave Springs (3) and Tennessee American Water Company	12.9
61.	Soddy	Union Fork Bakewell, U.D.	0.192 0.0010	Wells (3) and Sale Creek Utility District	9.8
62.	Hamilton County	Walden's Ridge, U.D.	0.471	Wells (2)	17.4
63.	Hamilton County	Container Corporation of America	1.9200	Well	22.0
64.	Hamilton County	Dave L. Brown Company	0.0200	Well	--

NOTE: The information in this table is historic and not subject to updating revisions.

Table 2.4.13-2 (Sheet 4)

GROUND WATER SUPPLIES WITHIN 20-MILE RADIUS OF THE PLANT SITE

(HISTORICAL INFORMATION)

	Location	Owner	Average Daily Use mgd	Source	Approximate Distance From Site[a] (Miles)
65.	Hamilton County	De Sota, Inc.	0.0750	Well	--
66.	Hamilton County	Hamilton Concrete Products	0.0050	Spring	24
67.	Cleveland	Thompson Spring Baptist Church		Well	13.5
68.	Dayton	Vaughn Trailer Park		Well	19.0
69.	Dayton	Walden's Ridge Baptist Church		Well	19.0
70.	Dayton	Walden's Ridge Elementary School		Well	19.0
71.	Cleveland	White Oak Baptist Church		Well	13.5
72.	Bradley County	Bockman Childrens Home		Well	10.2
73.	Catoosa County	Catoosa County U.D.		Well	19.0

[a] River mile distance from differences (TRM 483.6) for supplies taken from the Tennessee River channel; radial distance to other supplies.

NOTE: The information in this table is historic and not subject to updating revisions.

Best Available Historical Image

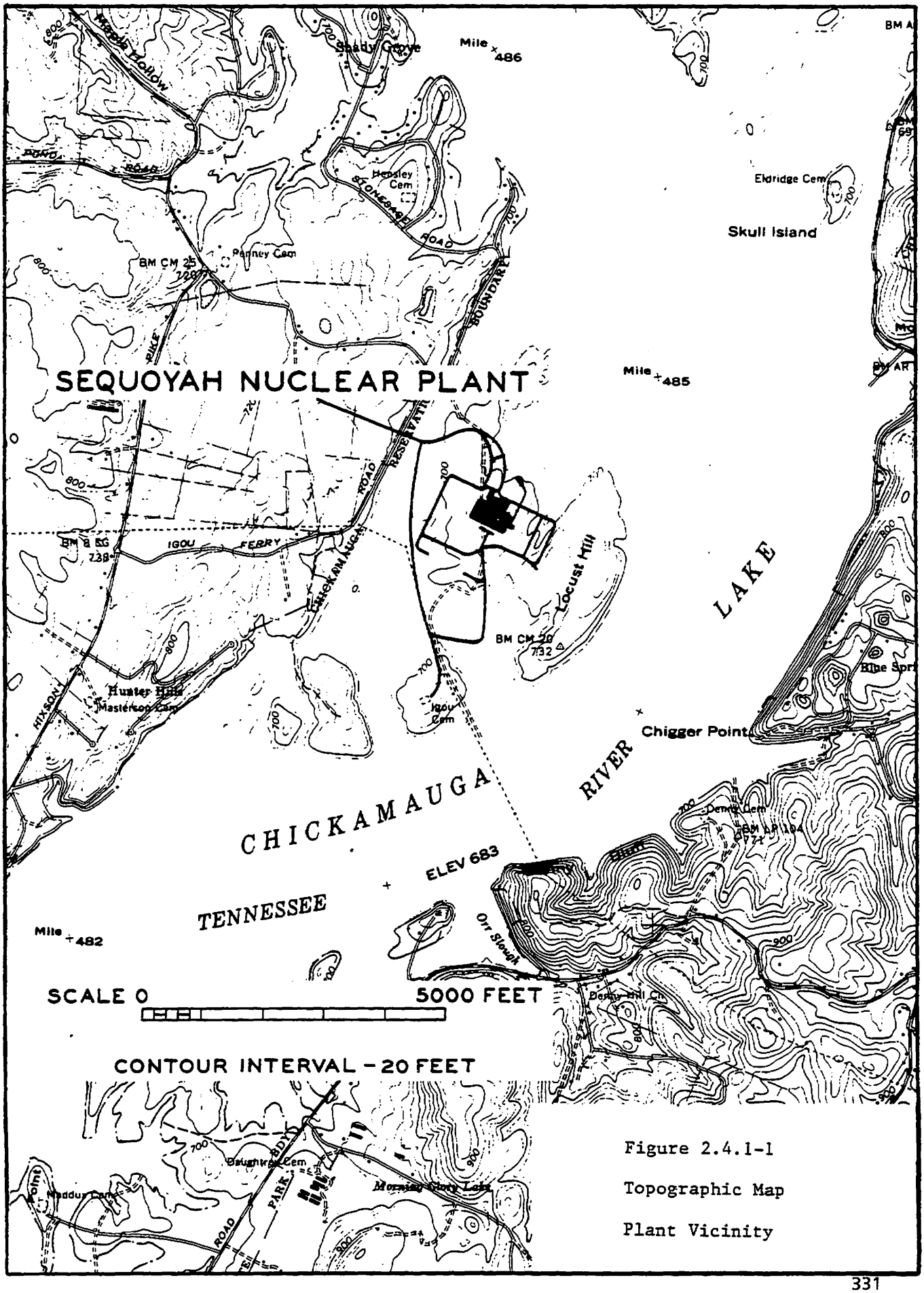

Figure 2.4.1-1

Topographic Map

Plant Vicinity

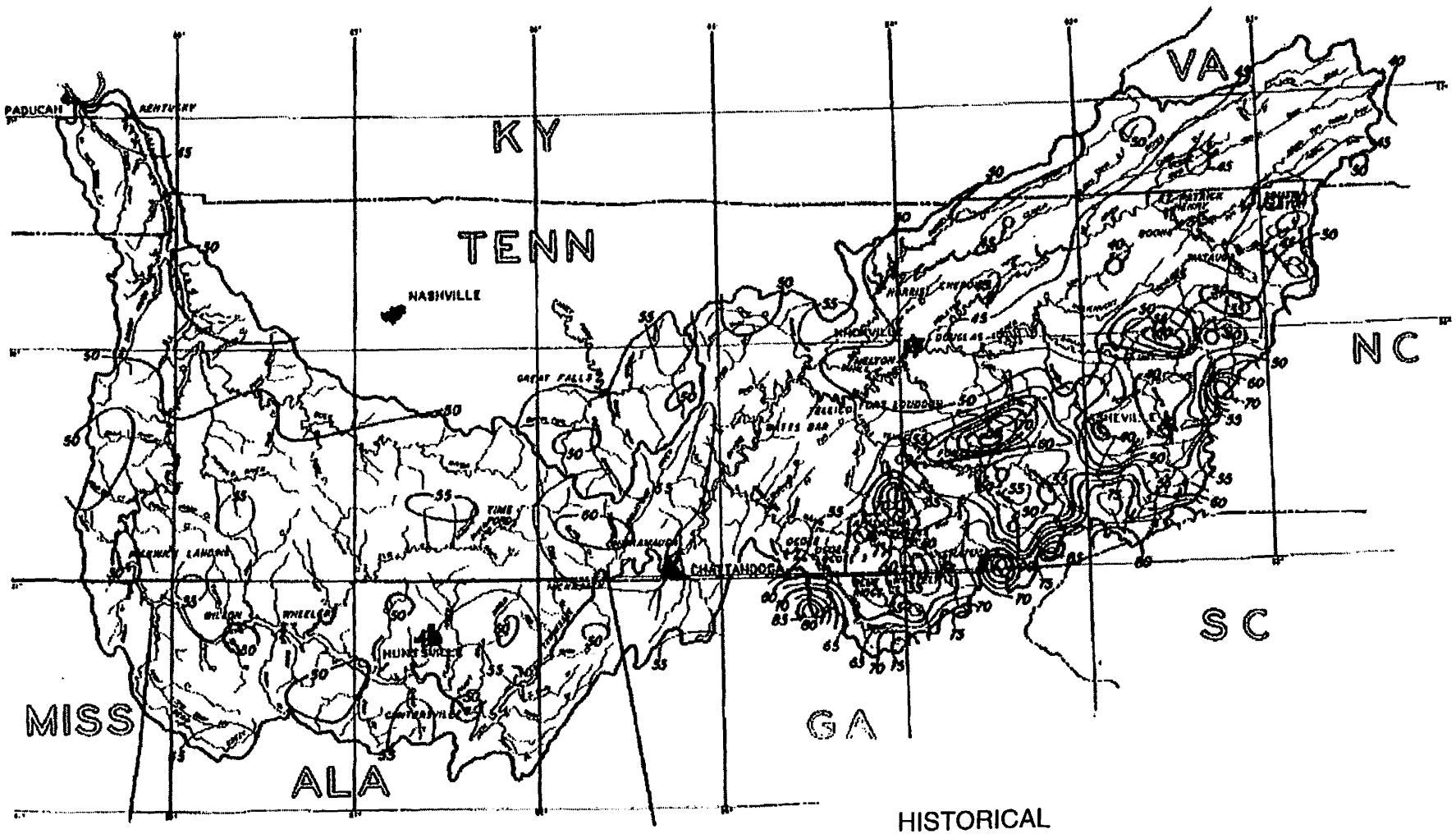

HISTORICAL

SYMBOLS:

- 50 — Rainfall in Inches
- State Lines
- Dams

Figure 2.4.1-2 Tennessee River Basin Mean Annual Precipitation 30-year Period, 1935-64

Revised by Amendment 17

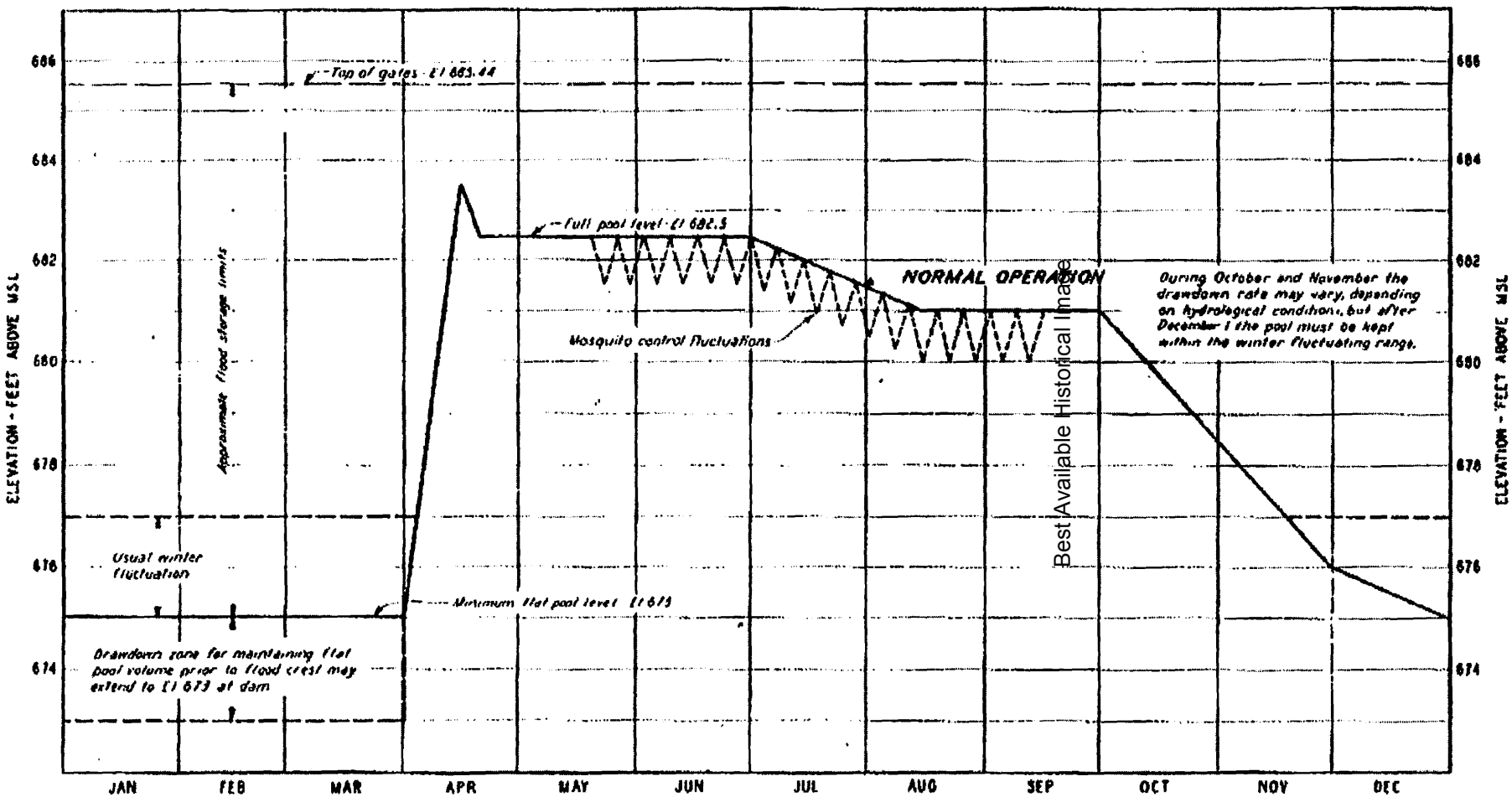

Best Available Historical Image

NOTES
(1) Elevations apply only at dam
(2) Maximum level assumed for design of dam - El 701.0

HISTORICAL

MULTIPLE-PURPOSE RESERVOIR OPERATIONS CHICKAMAUGA PROJECT FIGURE 2.4.1-3 SHEET 1 OF 14

Revised by Amendment 17

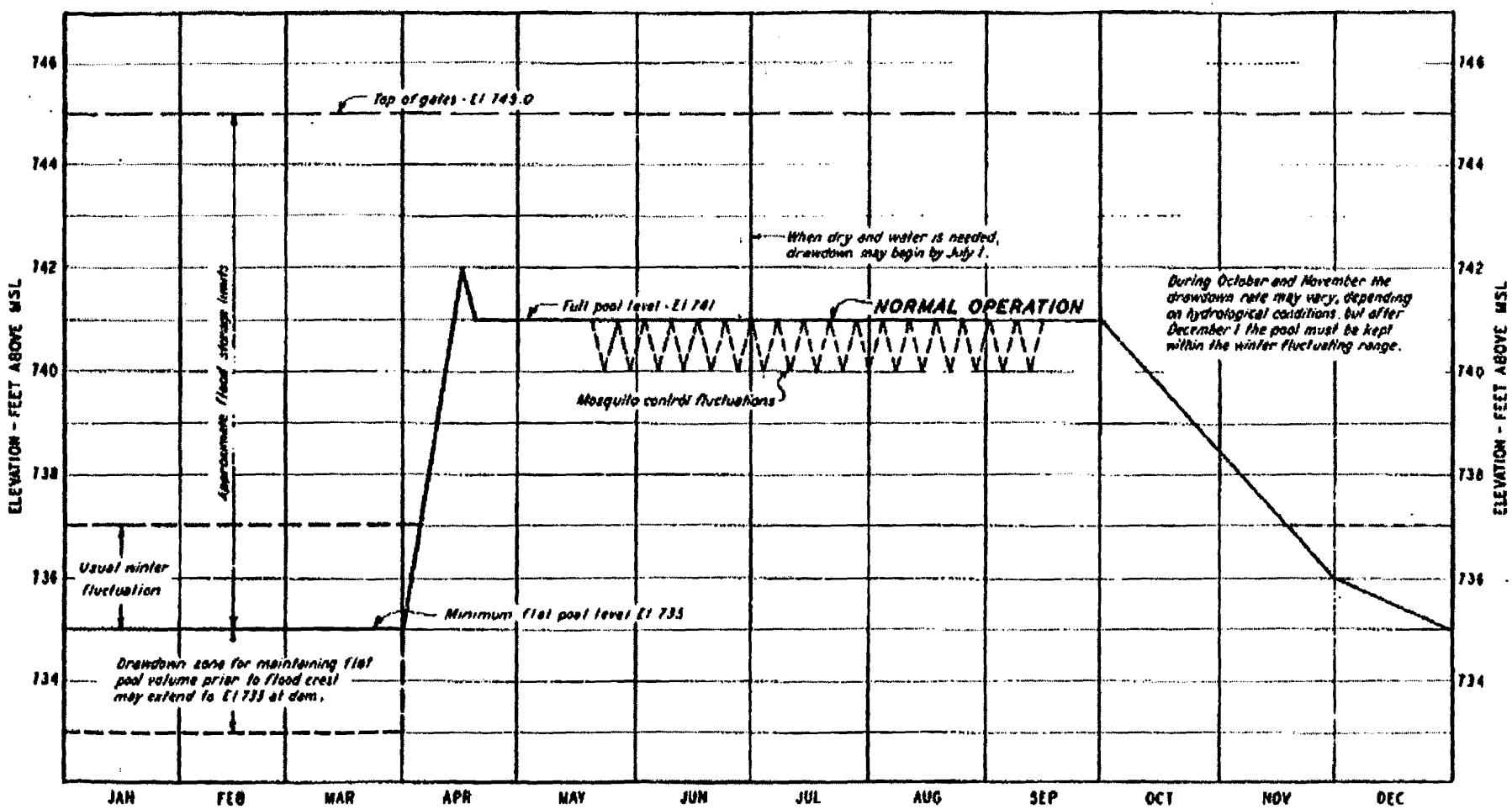

NOTES:

(1) Elevations apply only at dam.
(2) Maximum level assumed for design of dam - El 745.0

HISTORICAL

MULTIPLE-PURPOSE RESERVOIR OPERATIONS WATTS BAR PROJECT FIGURE 2.4.1-3 SHEET 2 OF 14

Revised by Amendment 17

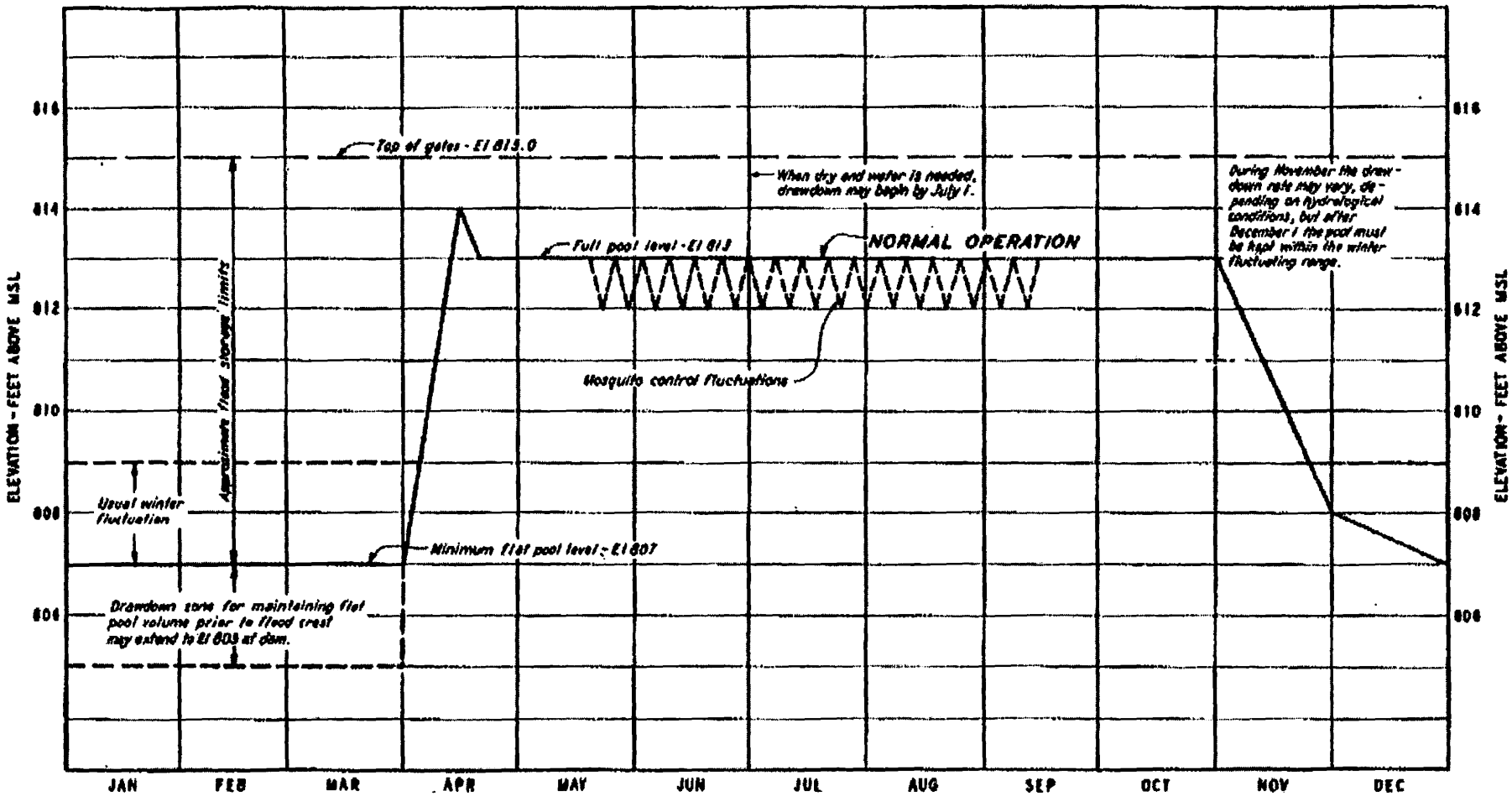

NOTES:
(1) Elevations apply only at dam.
(2) Maximum level assumed for design of dam - El 815.0.

HISTORICAL

MULTIPLE-PURPOSE RESERVOIR OPERATIONS FT. LOUDOUN PROJECT FIGURE 2.4.1-3 SHEET 3 OF 14

Revised by Amendment 17

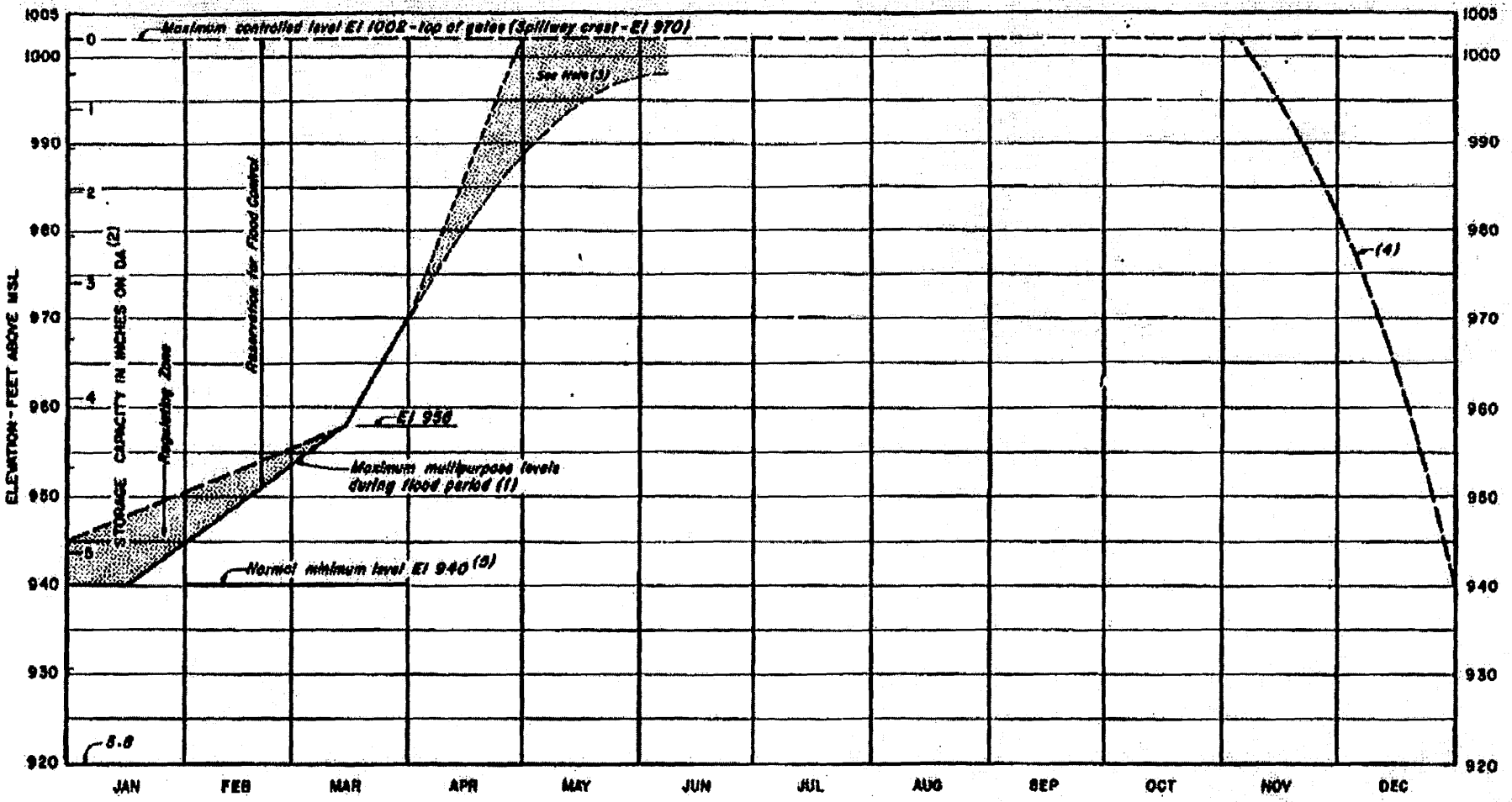

NOTES:

(1) To be exceeded only during flood control operations or for temporary regulation dependent upon hydrological conditions.

(2) Based upon drainage area, 4,541 square miles.

(3) Limitation on filling after April 1 or on drawdown following floods will depend on currently existing hydrological conditions and levels in other reservoirs.

(4) Drawdown at full machine capacity as limited by generator or by full-gate turbine discharge with median inflow.

(5) Reservoir may be drawn infrequently to lower levels in the event of drought conditions. Generation can be maintained to approximately elevation 910.

HISTORICAL

MULTIPLE-PURPOSE RESERVOIR OPERATIONS DOUGLAS PROJECT FIGURE 2.4.1-3 SHEET 4 OF 14

Revised by Amendment 17

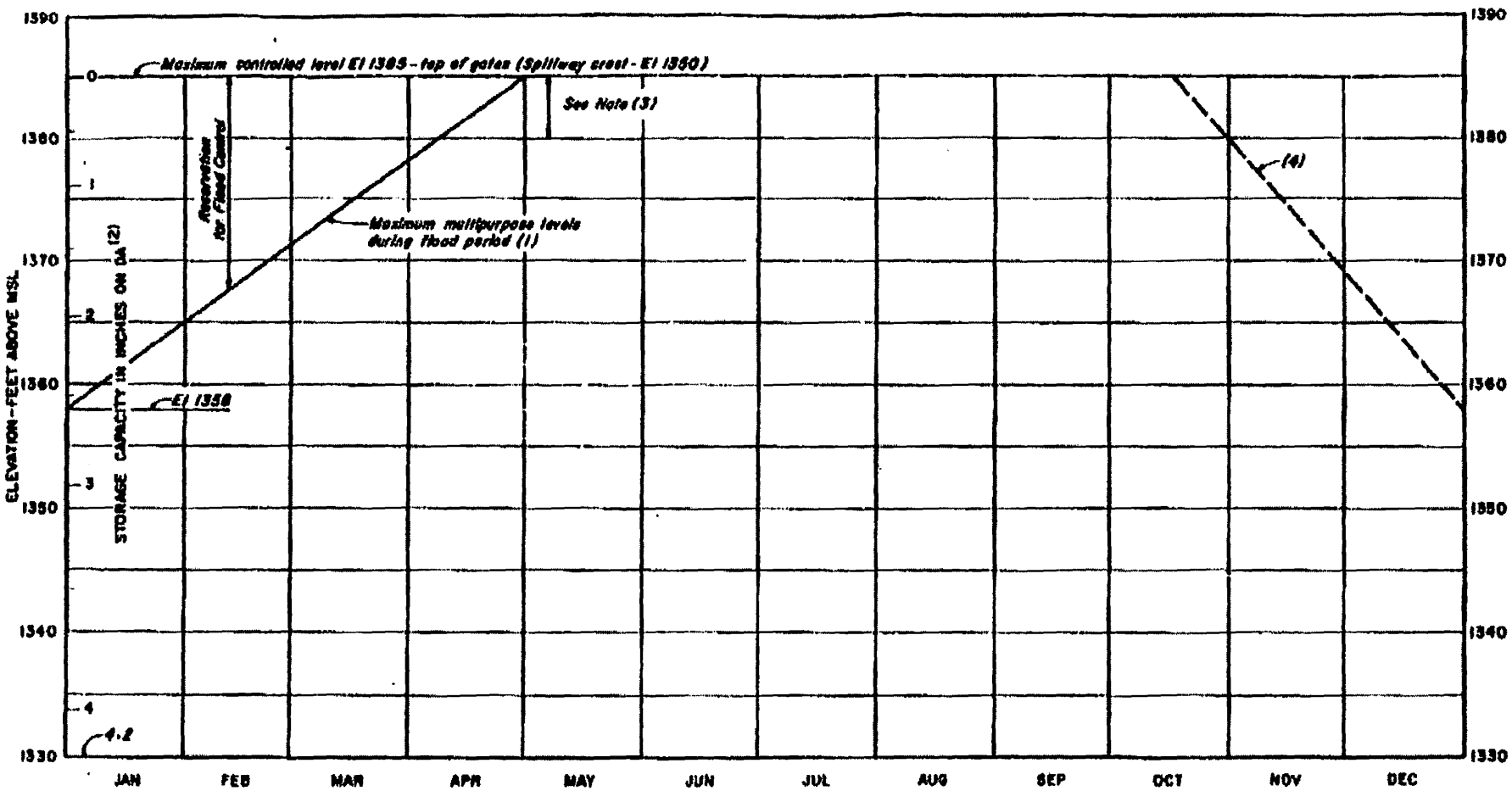

NOTES:

(1) To be exceeded only during flood control operations.

(2) Based upon drainage area at Boone Dam less drainage areas at South Holston and Watauga Dams (1840 - (703 + 468) = 669 square miles).

(3) During the summer and fall, levels within the range 1380 - 1385 will be controlled to regulate flash floods and to conserve water.

(4) Probable maximum levels.

HISTORICAL

MULTIPLE-PURPOSE RESERVOIR OPERATIONS BOONE PROJECT FIGURE 2.4.1-3 SHEET 5 OF 14

Revised by Amendment 17

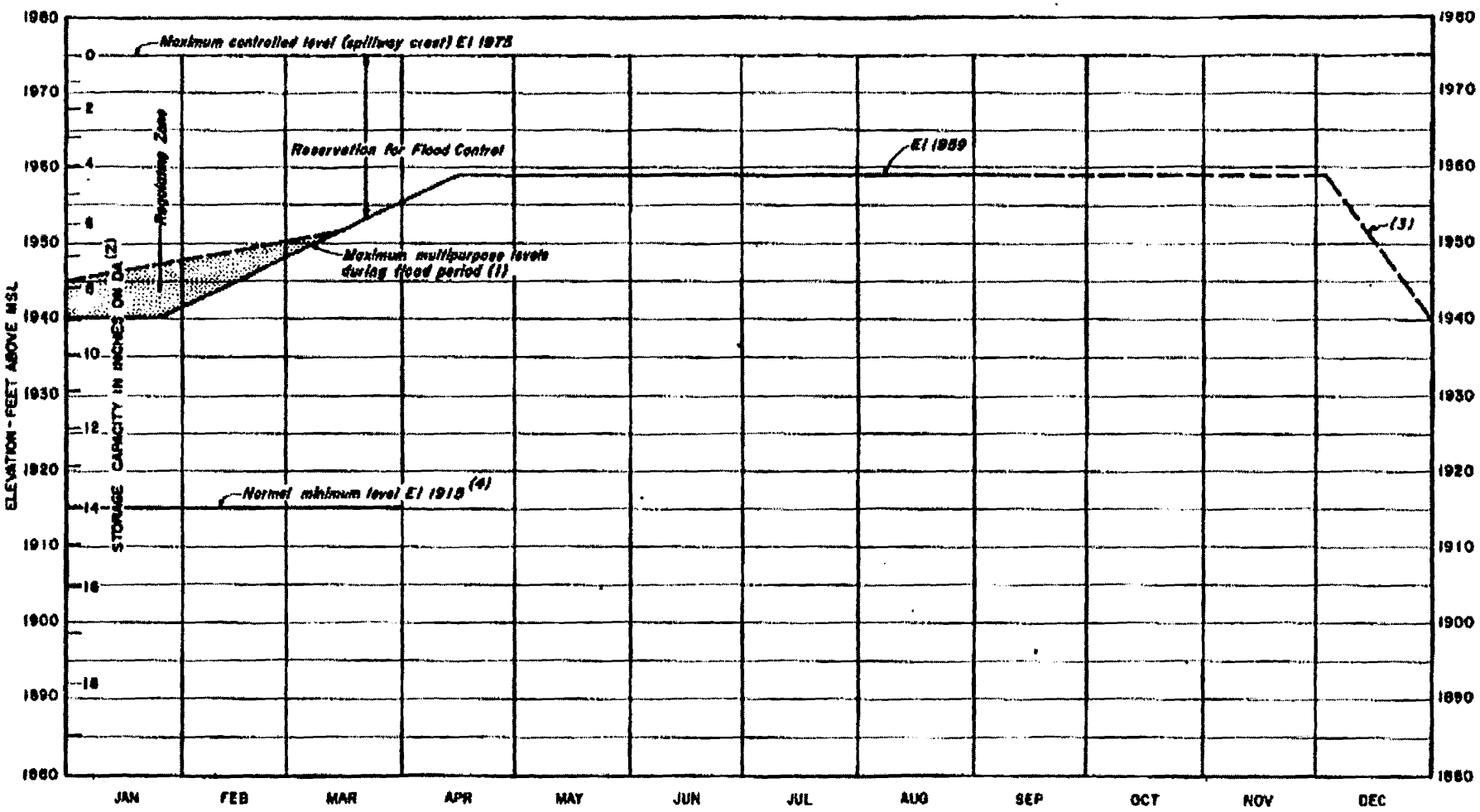

NOTES:
(1) To be exceeded only during flood control operations or for temporary regulation dependent upon hydrological conditions.
(2) Based upon drainage area, 458 square miles.
(3) Drawdown at full machine capacity as limited by generator or by full-gate turbine discharge with median inflow.
(4) Reservoir may be drawn infrequently to lower levels in the event of drought conditions. Generation can be maintained to approximately elevation 1915.

HISTORICAL

MULTIPLE-PURPOSE RESERVOIR OPERATIONS WATAUGA PROJECT FIGURE 2.4.1-3 SHEET 6 OF 14

Revised by Amendment 17

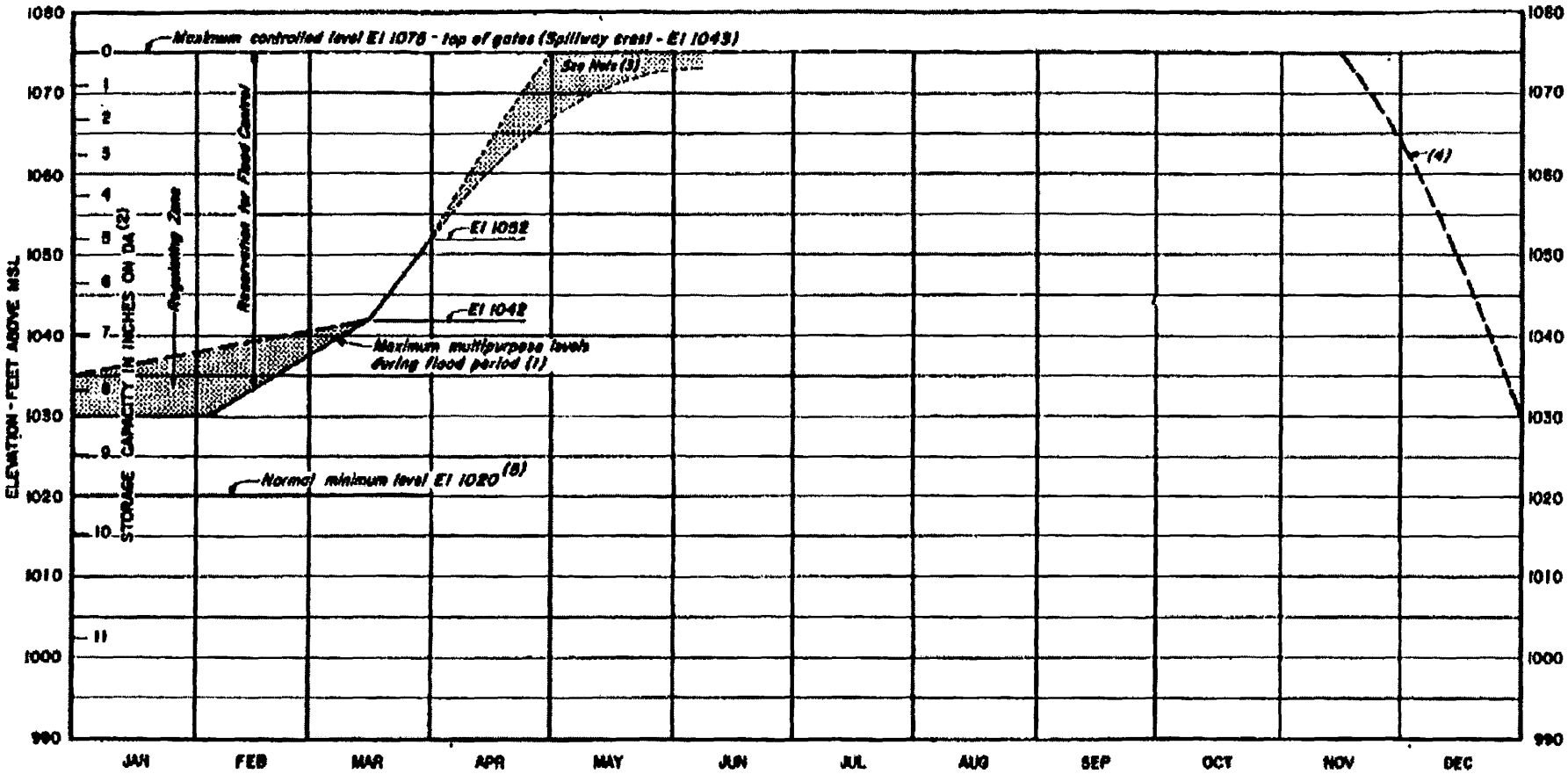

NOTES:

(1) To be exceeded only during flood control operations or for temporary regulation dependent upon hydrological conditions.

(2) Based upon drainage area at Cherokee Dam less drainage areas at South Holston Dam and Watauga Dam (3428 - (703 + 468) = 2257 square miles). Does not include storage in Boone Reservoir.

(3) Limitation on filling after April 1 or on drawdown following floods will depend on currently existing hydrological conditions and levels in other reservoirs.

(4) Drawdown at full machine capacity as limited by generator or by full-gate turbine discharge with median inflow.

(5) Reservoir may be drawn infrequently to lower levels in the event of drought conditions. Generation can be maintained to approximately elevation 980.

HISTORICAL

MULTIPLE-PURPOSE RESERVOIR OPERATIONS CHEROKEE PROJECT FIGURE 2.4.1-3 SHEET 7 OF 14

Revised by Amendment 17

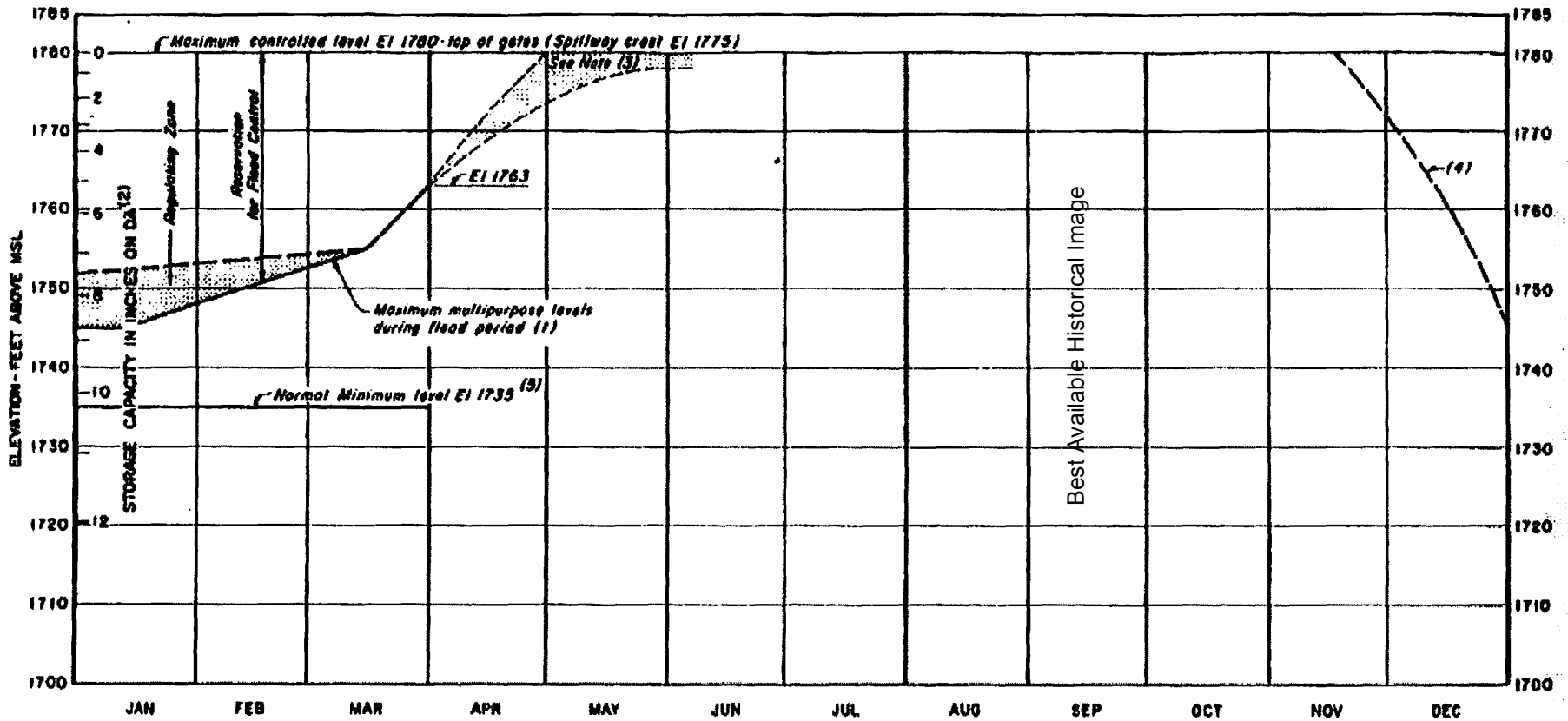

Best Available Historical Image

NOTES

(1) To be exceeded only during flood control operations or for temporary regulation dependent upon hydrological conditions.

(2) Based upon drainage area, 214 square miles

(3) Limitation on filling after April 1 or on drawdown following floods will depend on currently existing hydrological conditions and levels in other reservoirs

(4) Drawdown at full machine capacity as limited by generator or by full-gate turbine discharge with median inflow.

(5) Reservoir may be drawn infrequently to lower levels in the event of drought conditions. Generation can be maintained to approximately elevation 1690.

HISTORICAL

MULTIPLE-PURPOSE RESERVOIR OPERATIONS NOTTELY PROJECT FIGURE 2.4.1-3 SHEET 8 OF 14

Revised by Amendment

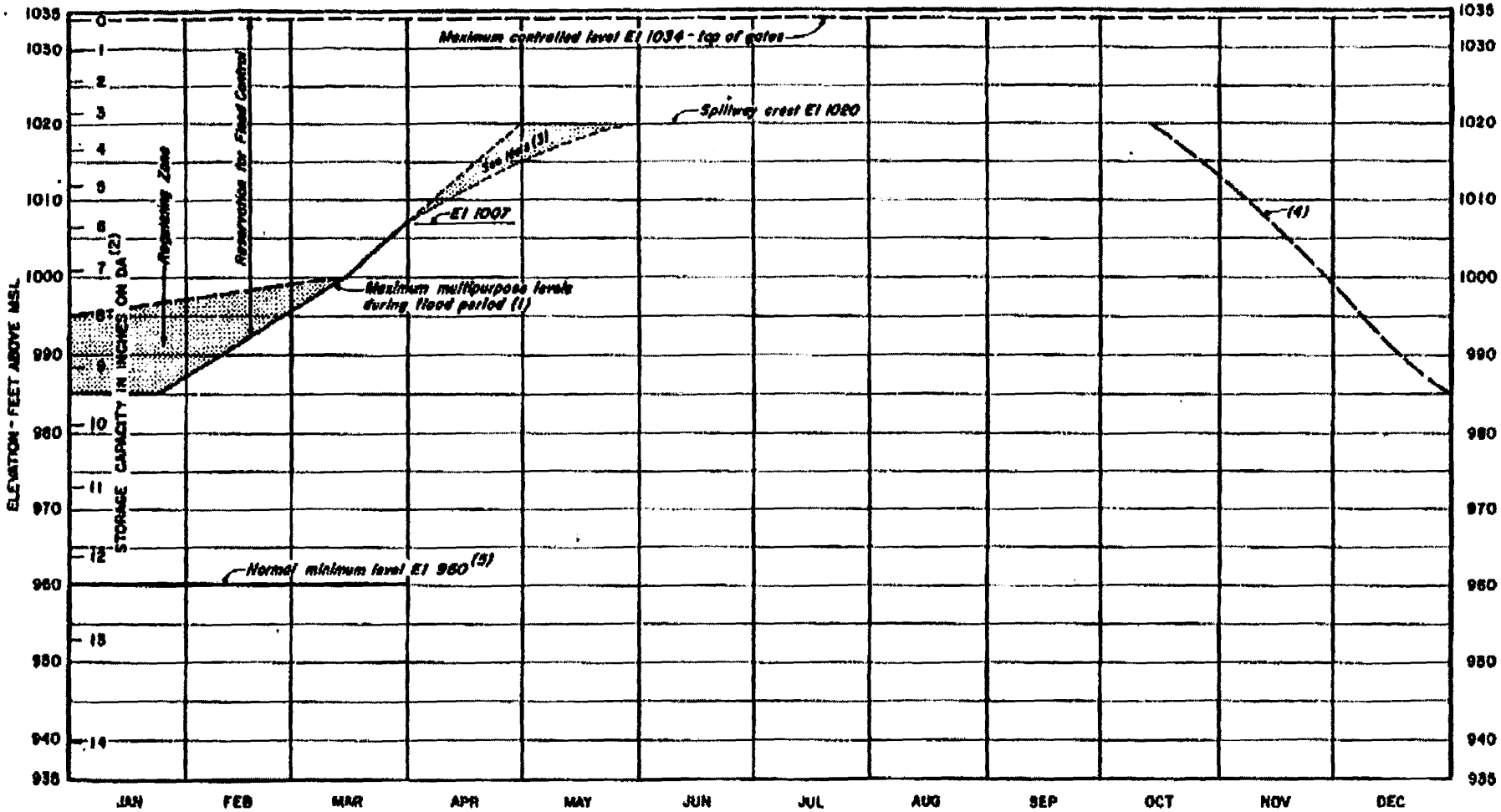

NOTES:

(1) To be exceeded only during flood control operations or for temporary regulation dependent upon hydrological conditions.

(2) Based upon drainage area, 2,912 square miles.

(3) Limitation on filling after April 1 or on drawdown following floods will depend on currently existing hydrological conditions and levels in other reservoirs.

(4) Drawdown at full machine capacity as limited by generator or by full-gate turbine discharge with median inflow.

(5) Reservoir may be drawn infrequently to lower levels in the event of drought conditions. Generation can be maintained to approximately elevation 900.

HISTORICAL

MULTIPLE-PURPOSE RESERVOIR OPERATIONS NORRIS PROJECT FIGURE 2.4.1-3 SHEET 9 OF 14

Revised by Amendment 17

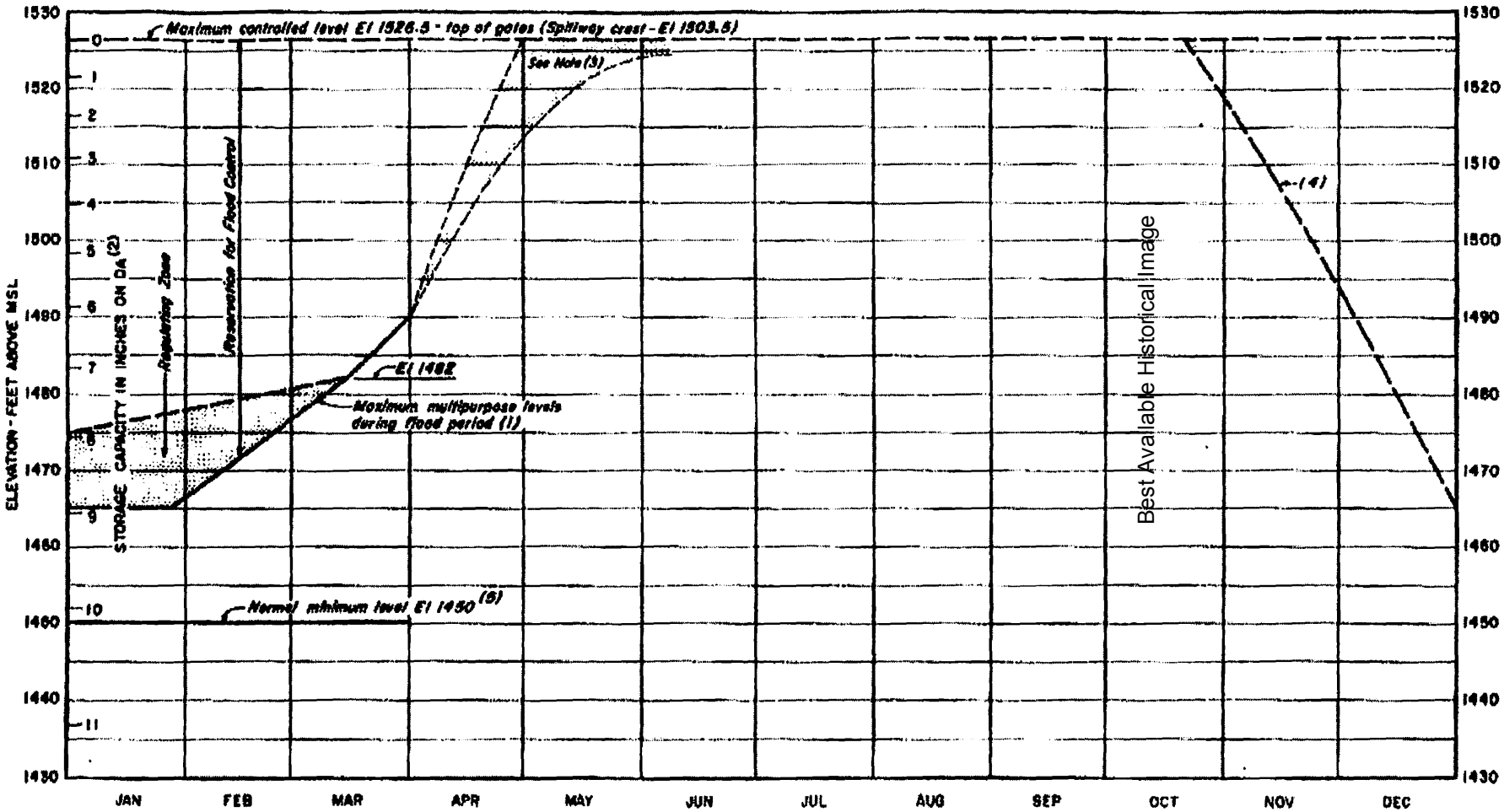

Best Available Historical Image

NOTES

(1) To be exceeded only during flood control operations or for temporary regulation dependent upon hydrological conditions.

(2) Based upon drainage area at Hiwassee Dam less drainage areas at Nottely and Chatuge Dams (968-(214+189)=565 square miles).

(3) Limitation on filling after April 1 or on drawdown following floods will depend on currently existing hydrological conditions and levels in other reservoirs.

(4) Drawdown limited by Apalachia generators or full-gate turbine discharge with median inflow.

(5) Reservoir may be drawn infrequently to lower levels in the event of drought conditions. Generation can be maintained to approximately elevation 1415.

HISTORICAL

MULTIPLE-PURPOSE RESERVOIR OPERATIONS HIWASSEE PROJECT FIGURE 2.4.1-3 SHEET 10 OF 14

Revised by Amendment 17

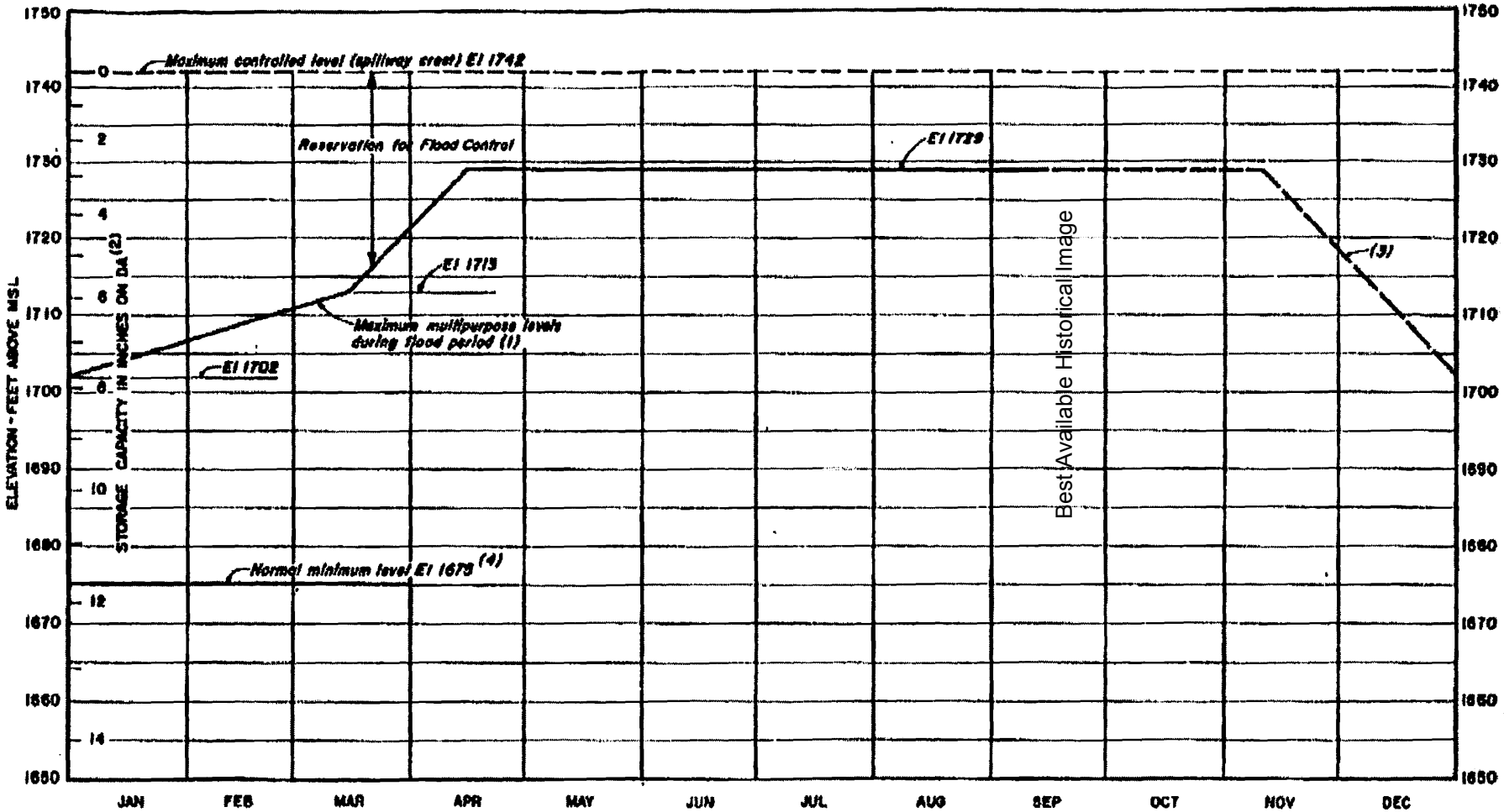

Best Available Historical Image

NOTES:
(1) To be exceeded only during flood control operations.
(2) Based upon drainage area, 703 square miles.
(3) Drawdown at full machine capacity as limited by generator or by full-gate turbine discharge with median inflow.
(4) Reservoir may be drawn infrequently to lower levels in the event of drought conditions. Generation can be maintained to approximately elevation 1616.

HISTORICAL

MULTIPLE-PURPOSE RESERVOIR OPERATIONS SOUTH HOLSTON PROJECT FIGURE 2.4.1-3 SHEET 11 OF 14

Revised by Amendment 17

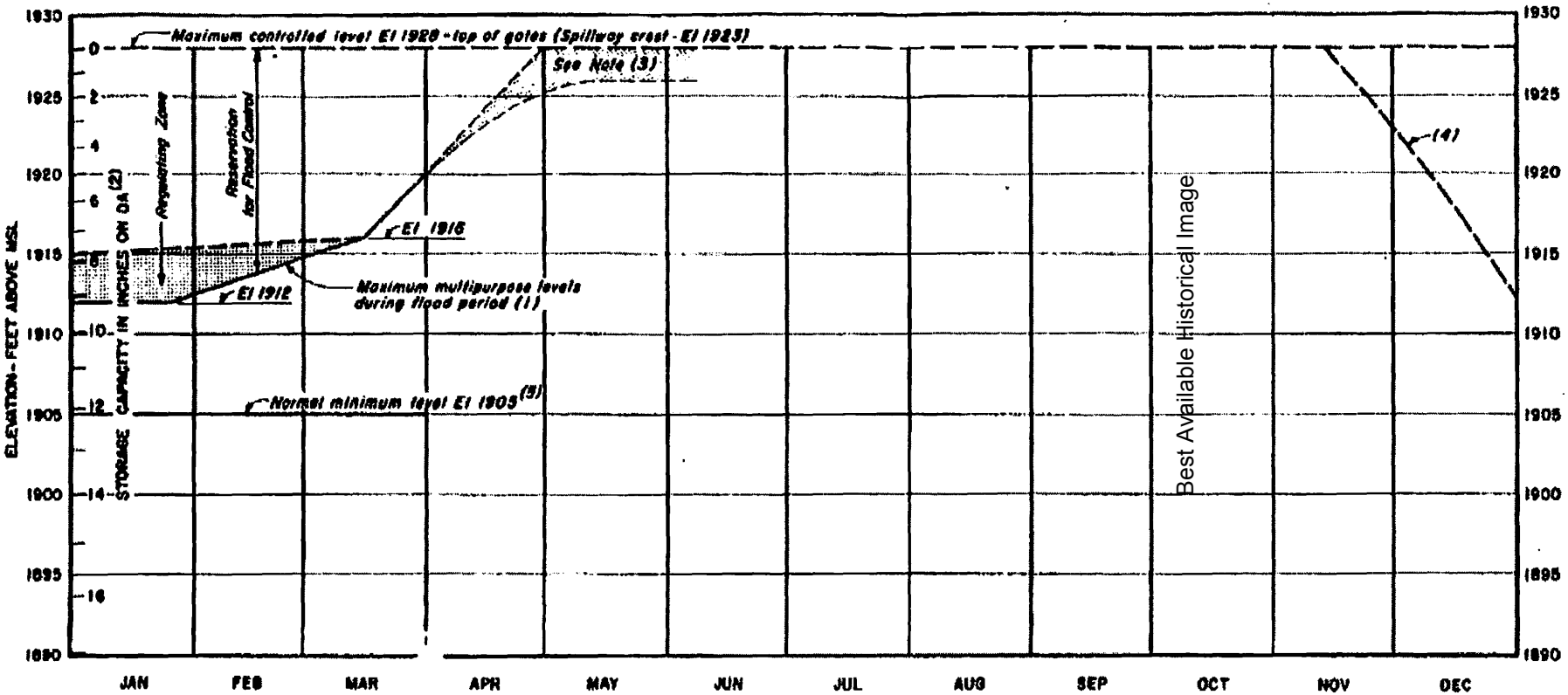

Best Available Historical Image

NOTES:

(1) To be exceeded only during flood control operations or for temporary regulation dependent upon hydrological conditions.

(2) Based upon drainage area, 189 square miles.

(3) Limitation on filling after April 1 or on drawdown following floods will depend on currently existing hydrological conditions and levels in other reservoirs.

(4) Drawdown at full machine capacity as limited by generator or by full-gate turbine discharge with median inflow.

(5) Reservoir may be drawn infrequently to lower levels in the event of drought conditions. Generation can be maintained to approximately elevation 1860.

HISTORICAL

MULTIPLE-PURPOSE RESERVOIR OPERATIONS CHATUGE PROJECT FIGURE 2.4.1-3 SHEET 12 OF 14

Revised by Amendment 17

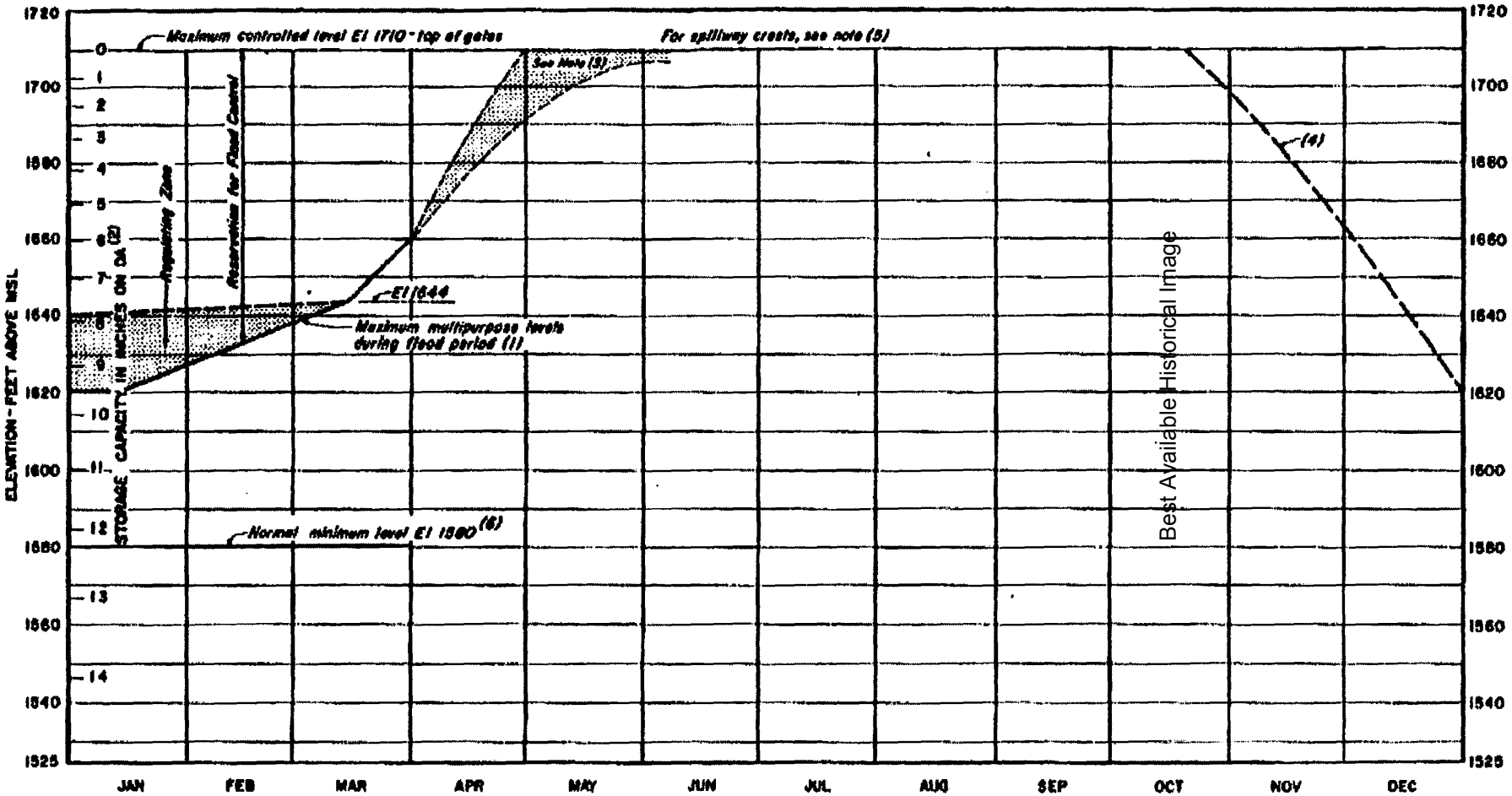

Best Available Historical Image

NOTES:

(1) To be exceeded only during flood control operations or for temporary regulation dependent upon hydrological conditions.

(2) Based upon drainage area at Fontana Dam less drainage areas at Thorpe and Nantahala Dams (1571 - (36.7 + 91.0) = 1443.3 square miles).

(3) Limitation on filling after April 1 or on drawdown following floods will depend on currently existing hydrological conditions and levels in other reservoirs.

(4) Drawdown at full machine capacity as limited by generator or by full-gate turbine discharge with median inflow.

(5) Main spillway crest - El 1675, Emergency spillway crest - El 1715.

(6) Reservoir may be drawn infrequently to lower levels in the event of drought conditions. Generation can be maintained to approximately elevation 1470.

HISTORICAL

MULTIPLE-PURPOSE RESERVOIR OPERATIONS FONTANA PROJECT FIGURE 2.4.1-3 SHEET 13 OF 14

Revised by Amendment 17

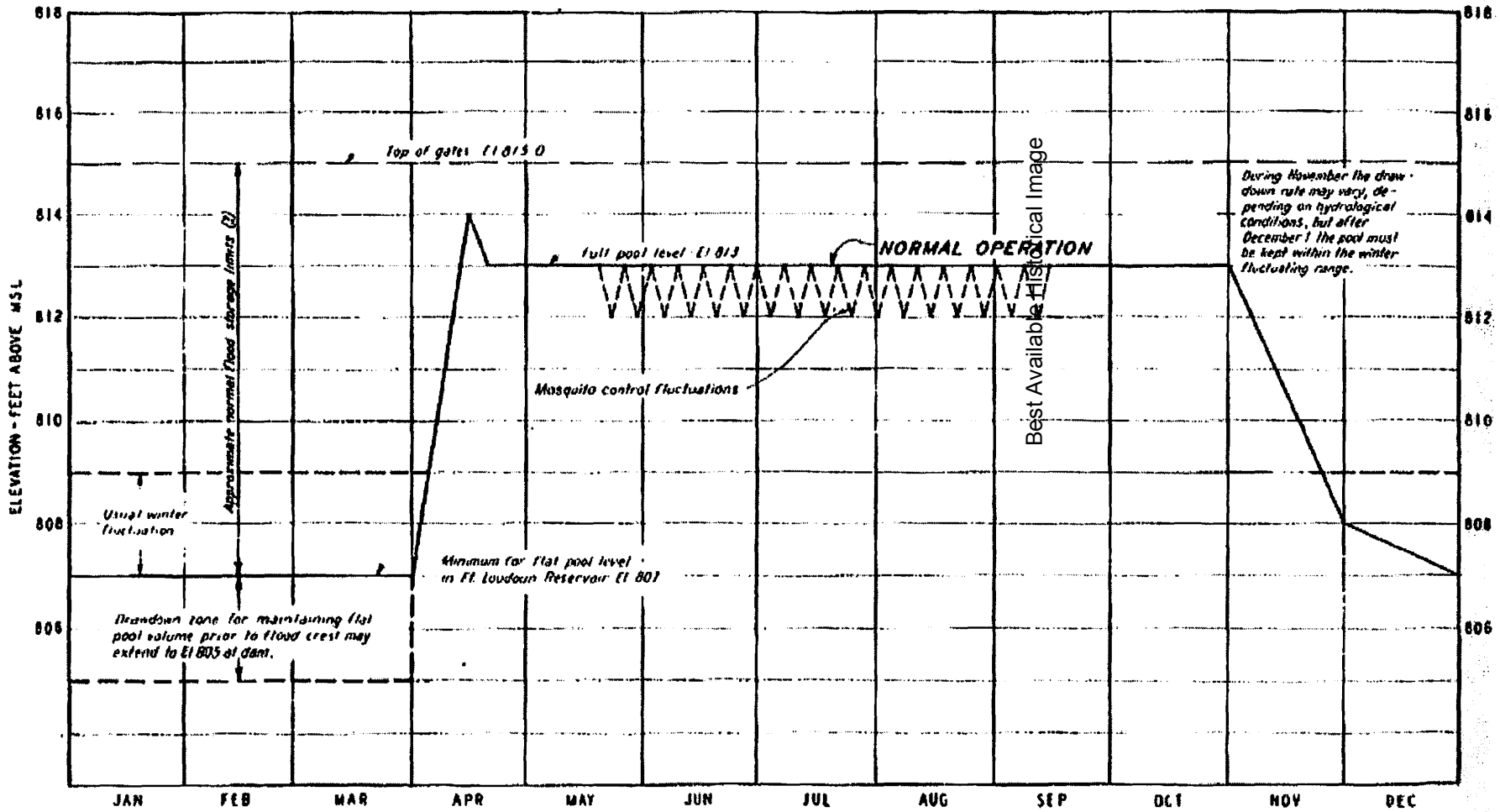

Best Available Historical Image

NOTES
(1) Elevations apply only at dam
(2) Maximum level assumed for design of dam El 817.5.
(3) Under extreme flood conditions the reservoir may be surcharged as high as El 817.5

HISTORICAL

MULTIPLE - PURPOSE RESERVOIR OPERATIONS TELLICO PROJECT

FIGURE 2.4.1-3

SHEET 14 OF 14

Revised by Amend. 17

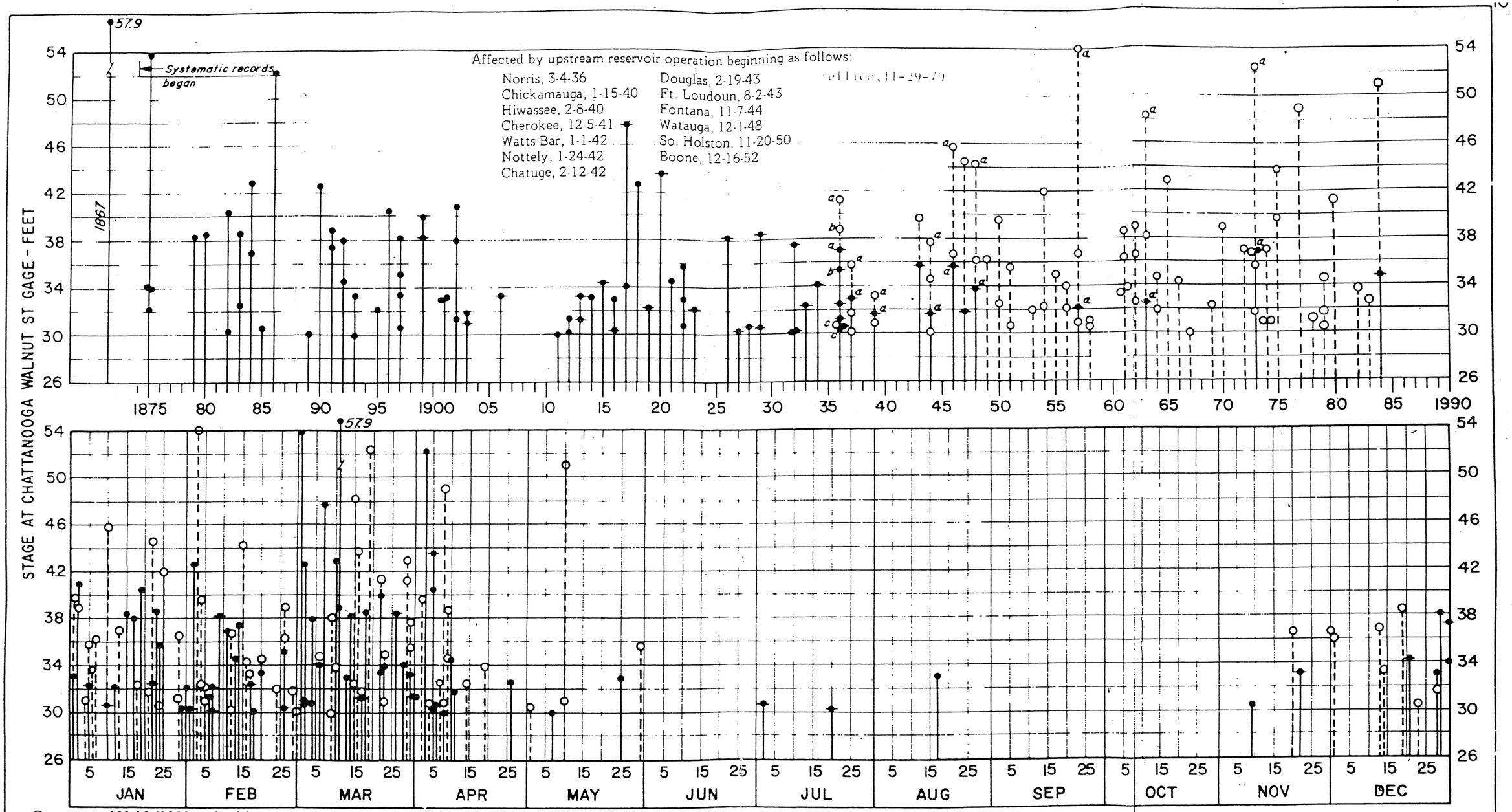

Gage zero = 621.12 (1929 genl. adj)
USWB flood stage = 30 feet
Drainage area = 21,400 sq mi

NOTES:

The stages shown for the 1867 flood and the highest flood in 1875 are from well authenticated flood marks. All other stages, except in 1874 and 1875, are reported (◆) or estimated (●) crests from observations at the same datum and location, Walnut Street. The stage readings in 1874 and 1875 were based on a different datum, but the estimated crests were corrected to be comparable to later records. Stages since October 22, 1913 are not comparable with earlier ones because of the backwater effect of Hales Bar Dam, 35 miles downstream. A change in Hales Bar Spillway in 1948, the closure of Nickajack Dam in December 1967, and subsequent removal of Hales Bar Dam further affected Chattanooga stages, making later stages incomparable to earlier periods.

Since March 4, 1936, when upstream regulation began, both computed natural (O) and reported crests are shown on the yearly chart. These natural crests are based on conditions when TVA was established, and hence are comparable to stages from 1913 to 1948. Only natural crests since March 1936 are shown on the seasonal diagram.

Complete to Oct. 1, 1985

HISTORICAL

Figure 2.4.2-1 Flood Distribution Diagram Chattanooga, Tn.

Revised by Amendment 17

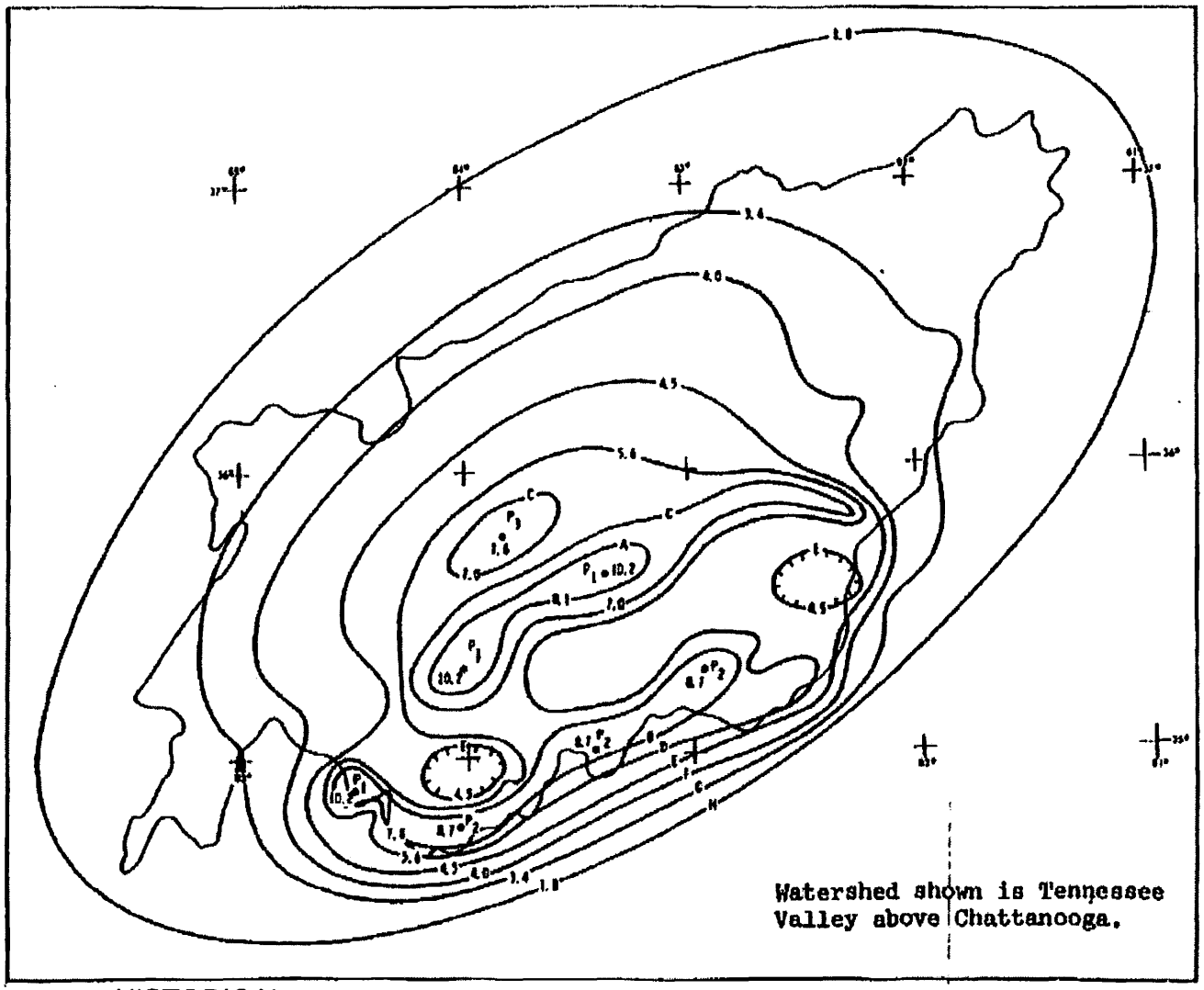

HISTORICAL

Figure 2.4.3-1 Probable maximum March isohyets (21,400-sq. mi. downstream), 1st 6 hours (in.)

Revised by Amendment 17

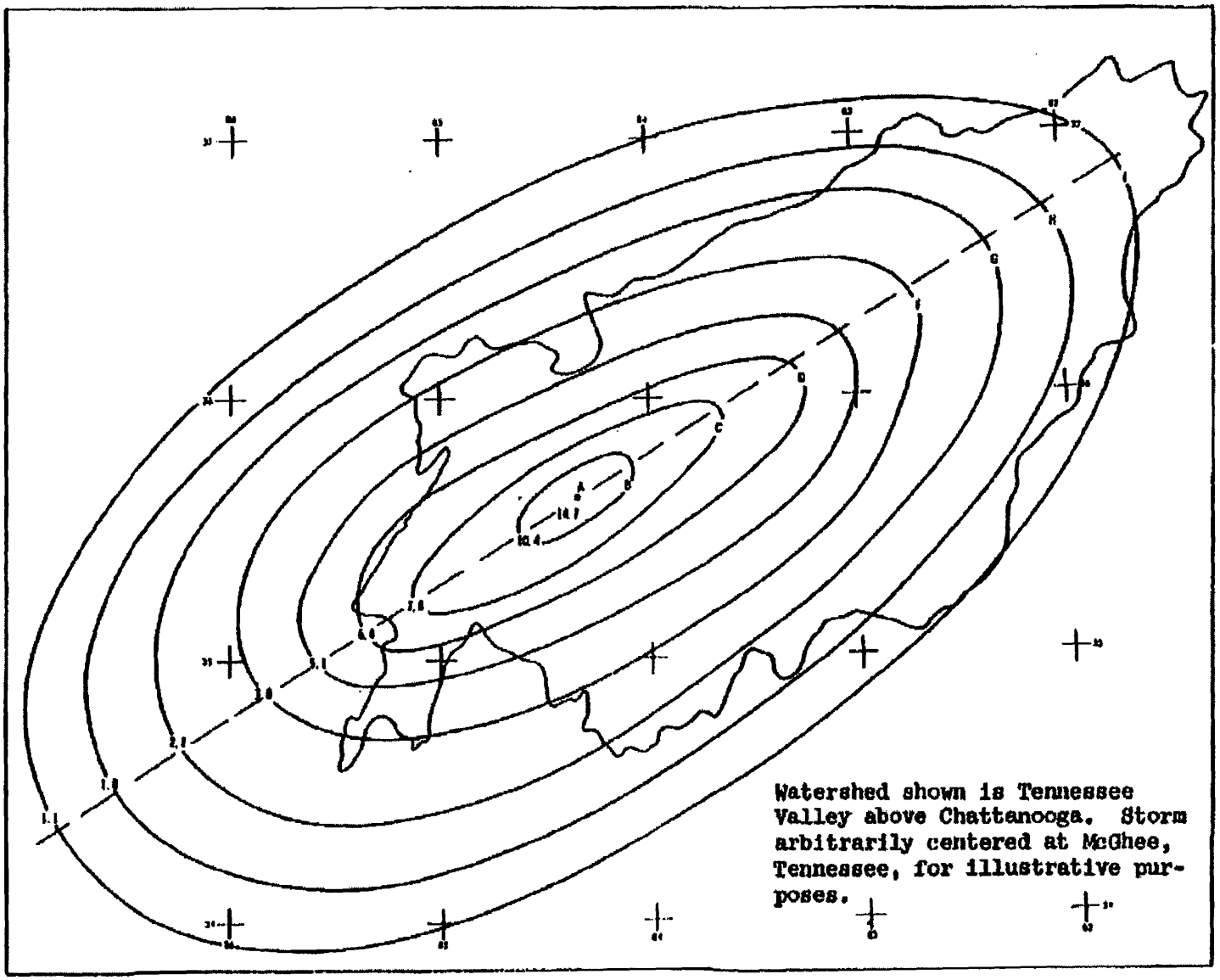

HISTORICAL

Figure 2.4.3-2 **Probable maximum March isohyets (7980 sq. mi.), 1st 6 hours (in.)**

Best Available Historical Image

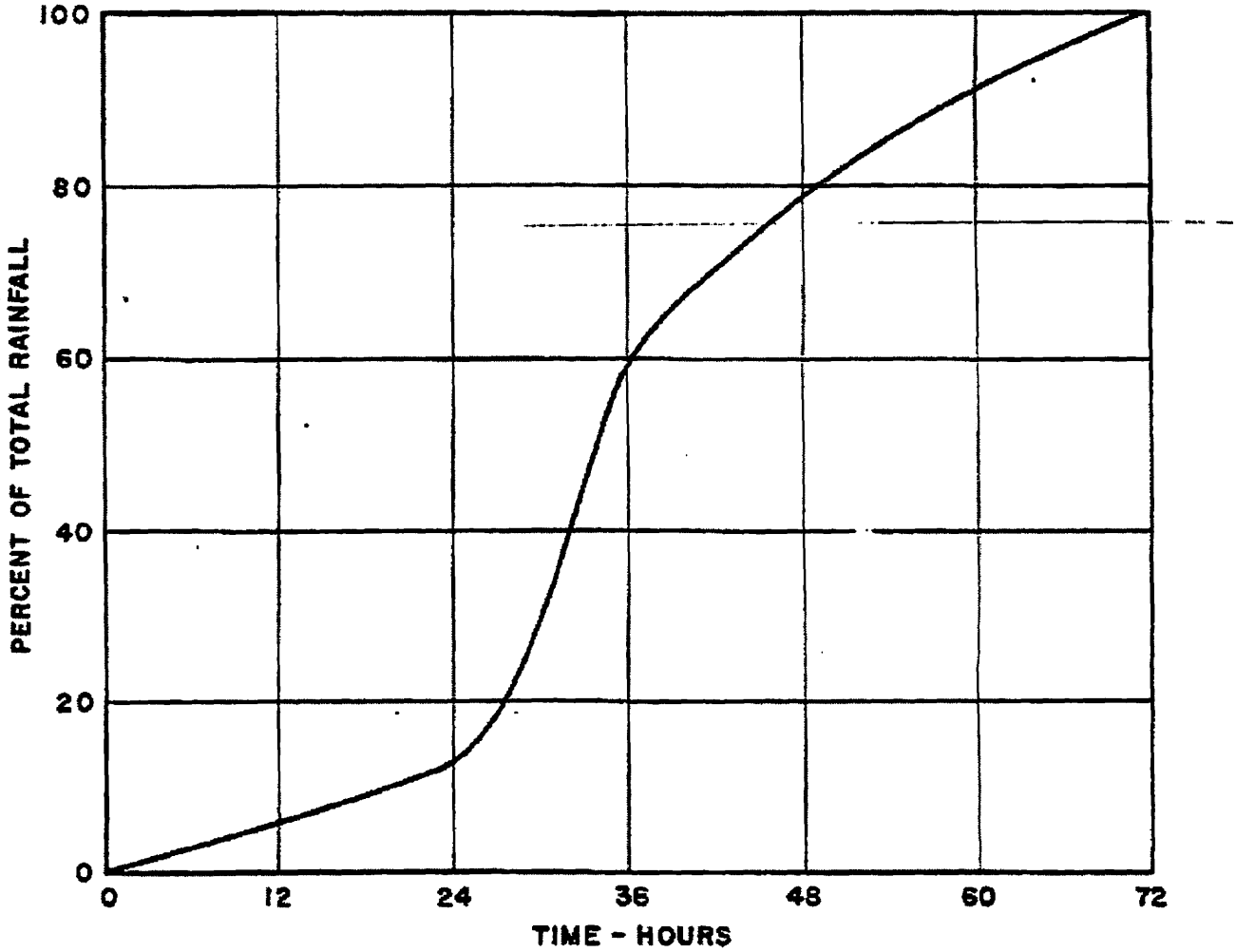

RAINFALL-TIME DISTRIBUTION
ADOPTED STANDARD MASS CURVE
HISTORICAL

Figure 2.4.3-3

Revised by Amendment 17

Best Available Historical Image

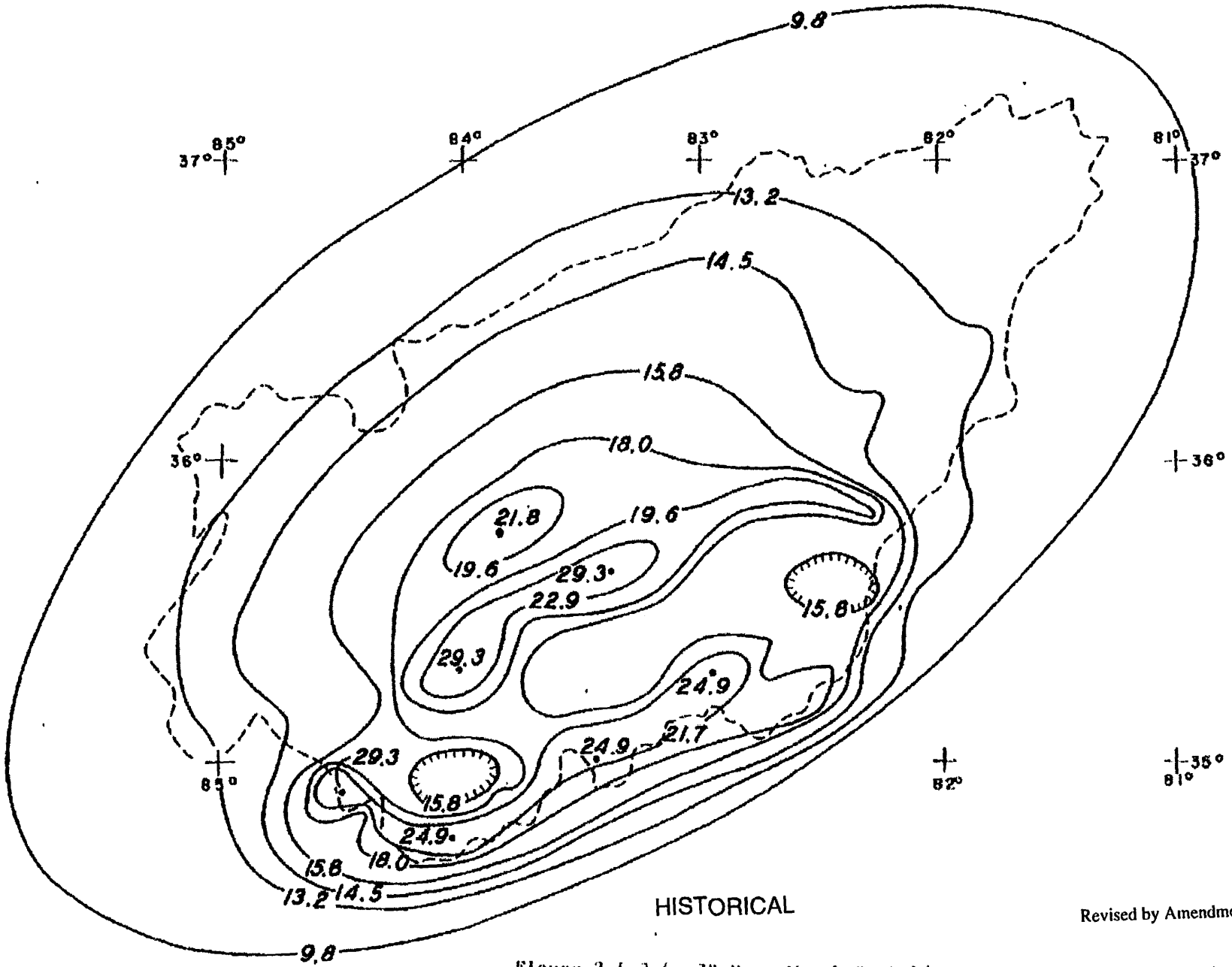

HISTORICAL

Revised by Amendment 17

Figure 2.4.3-4 72-Hour March Probable Maximum Storm Depths (IN)

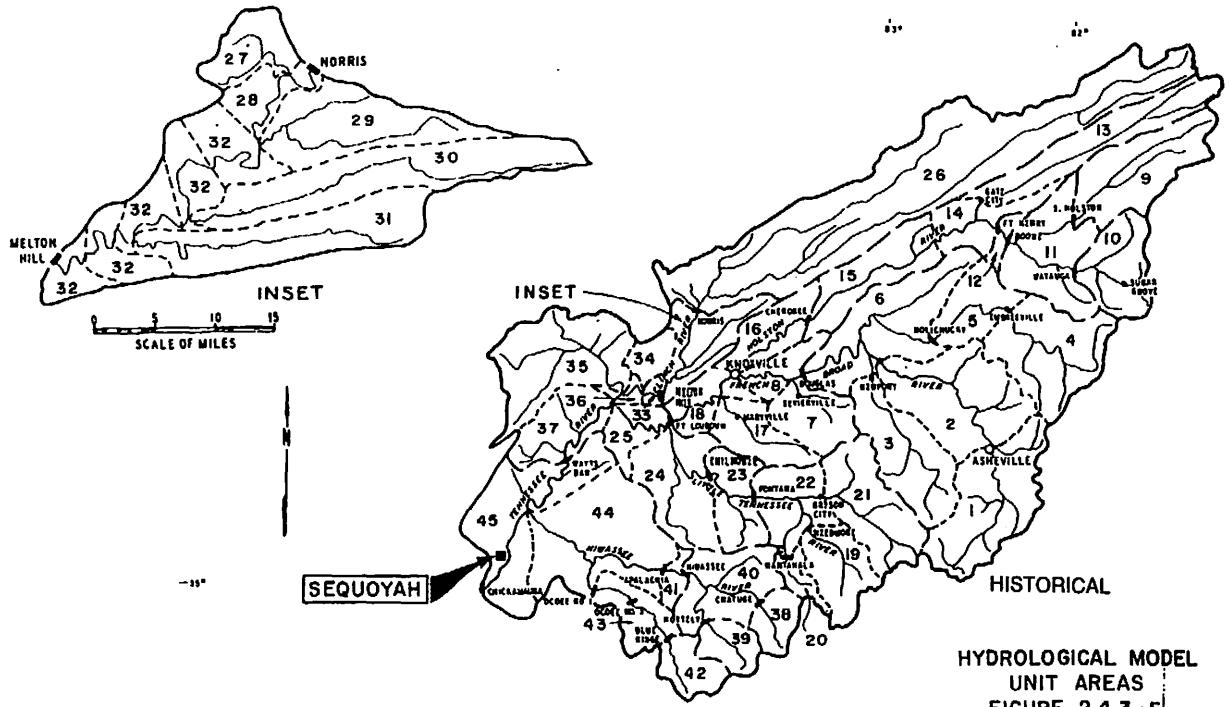

HYDROLOGICAL MODEL
UNIT AREAS
FIGURE 2.4.3-5

Revised by Amendment 17

LEGEND:
28 AREA INDEX NUMBER
WATERSHED ABOVE GUNTERSVILLE DAM
RESERVOIR INFLOW AREAS
UNIT AREAS
STREAM GAGING STATIONS
DAMS

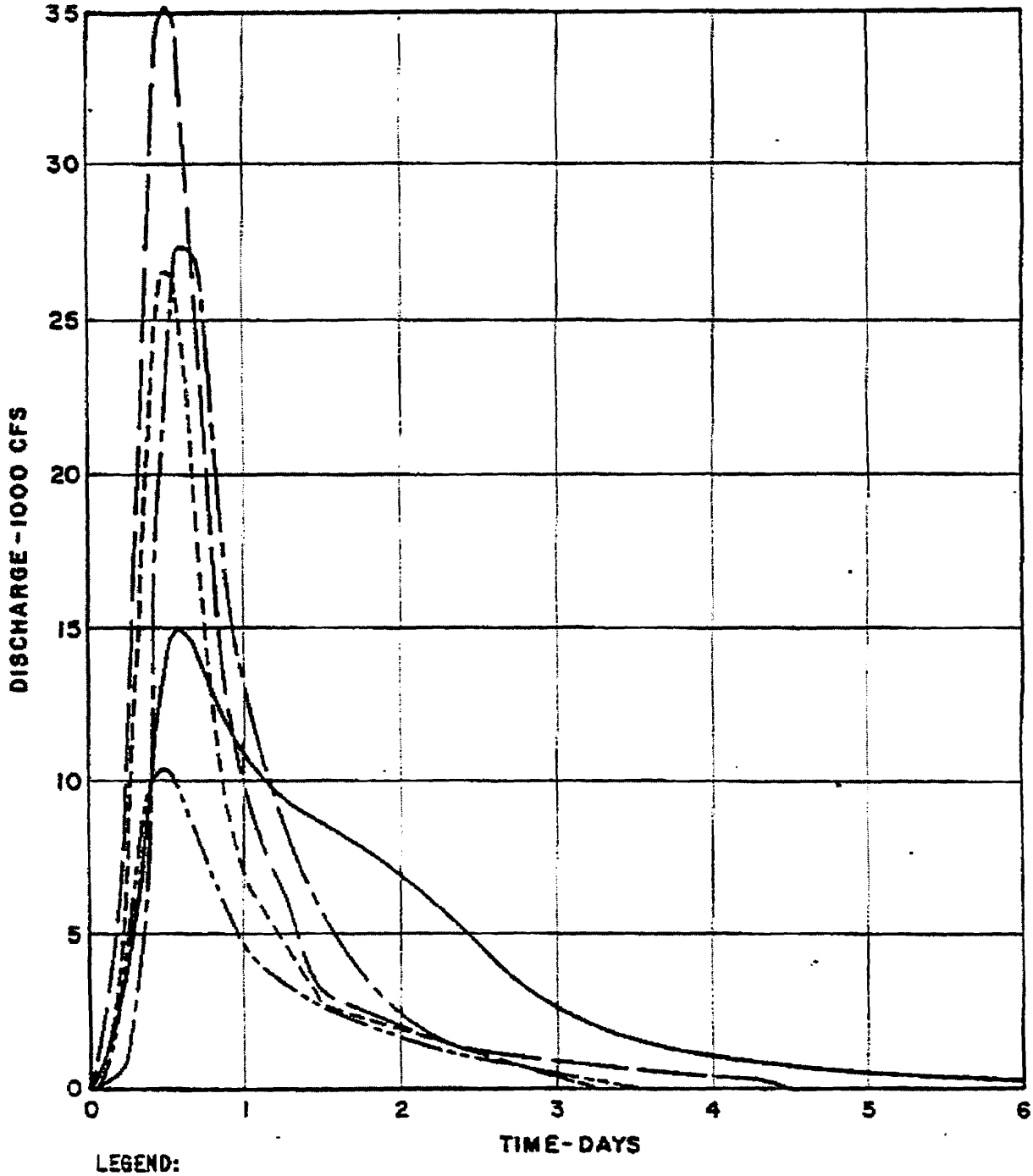

LEGEND:

AREA 1, FRENCH BROAD RIVER AT ASHEVILLE, 945 SQ. MI.
AREA 2, FRENCH BROAD RIVER, NEWPORT TO ASHEVILLE, 913 SQ. MI.
AREA 3, PIGEON RIVER AT NEWPORT, 666 SQ. MI.
AREA 4, NOLICHUCKY RIVER AT EMBREEVILLE, 805 SQ. MI.
AREA 5, NOLICHUCKY LOCAL, 378 SQ. MI.

HISTORICAL

Revised by Amendment 17

6-HOUR UNIT HYDROGRAPHS
SHEET 1 OF 11
FIGURE 2.4.3-6

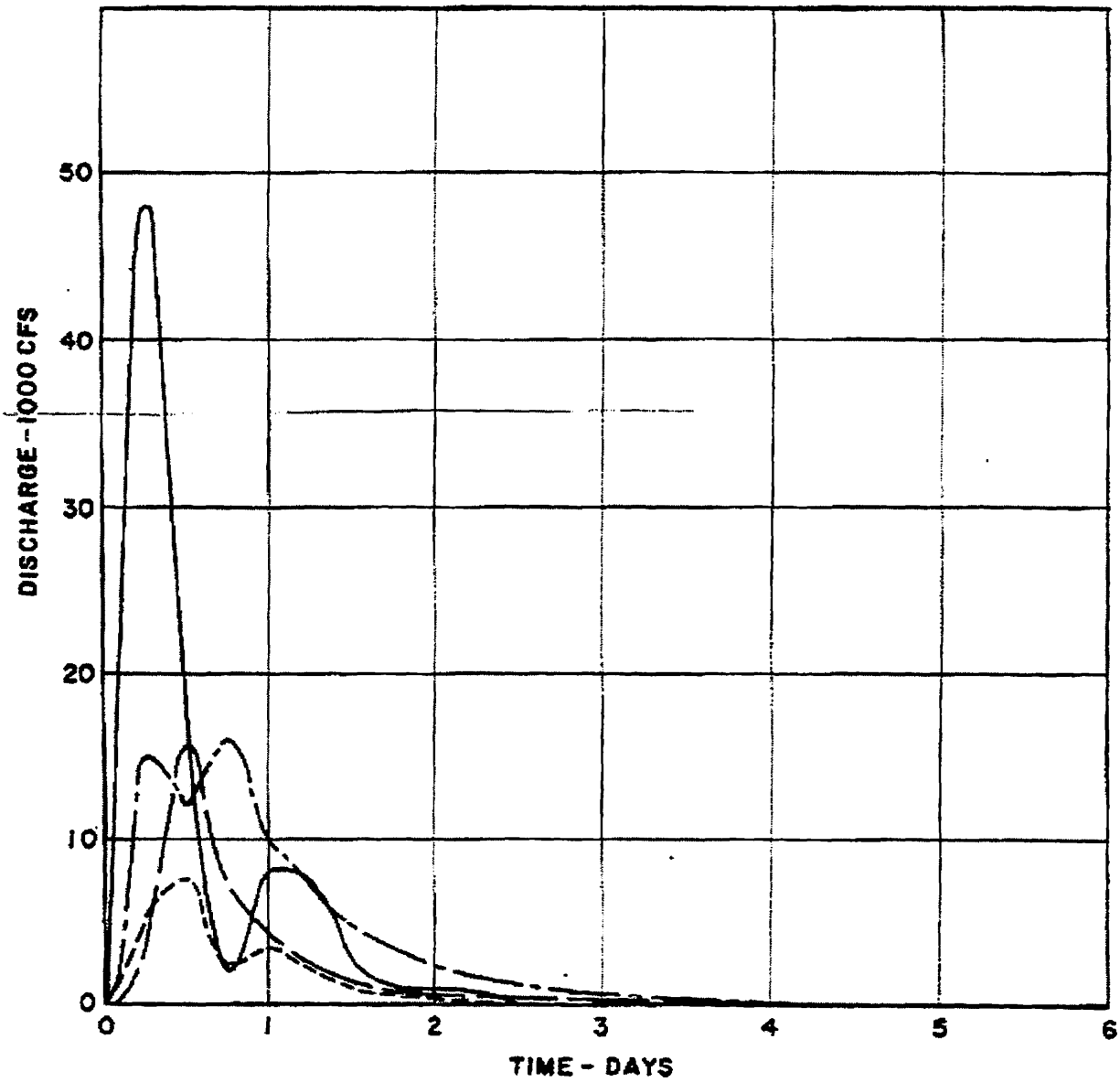

LEGEND:

AREA 6, DOUGLAS LOCAL, 832 SQ. MI.
AREA 7, LITTLE PIGEON RIVER, 353 SQ. MI.
AREA 8, FRENCH BROAD RIVER LOCAL, 207 SQ. MI.
AREA 9, SOUTH HOLSTON DAM, 703 SQ. MI.

HISTORICAL

6-HOUR UNIT HYDROGRAPHS
SHEET 2 OF 11
FIGURE 2.4.3-6

Revised by Amendment 17

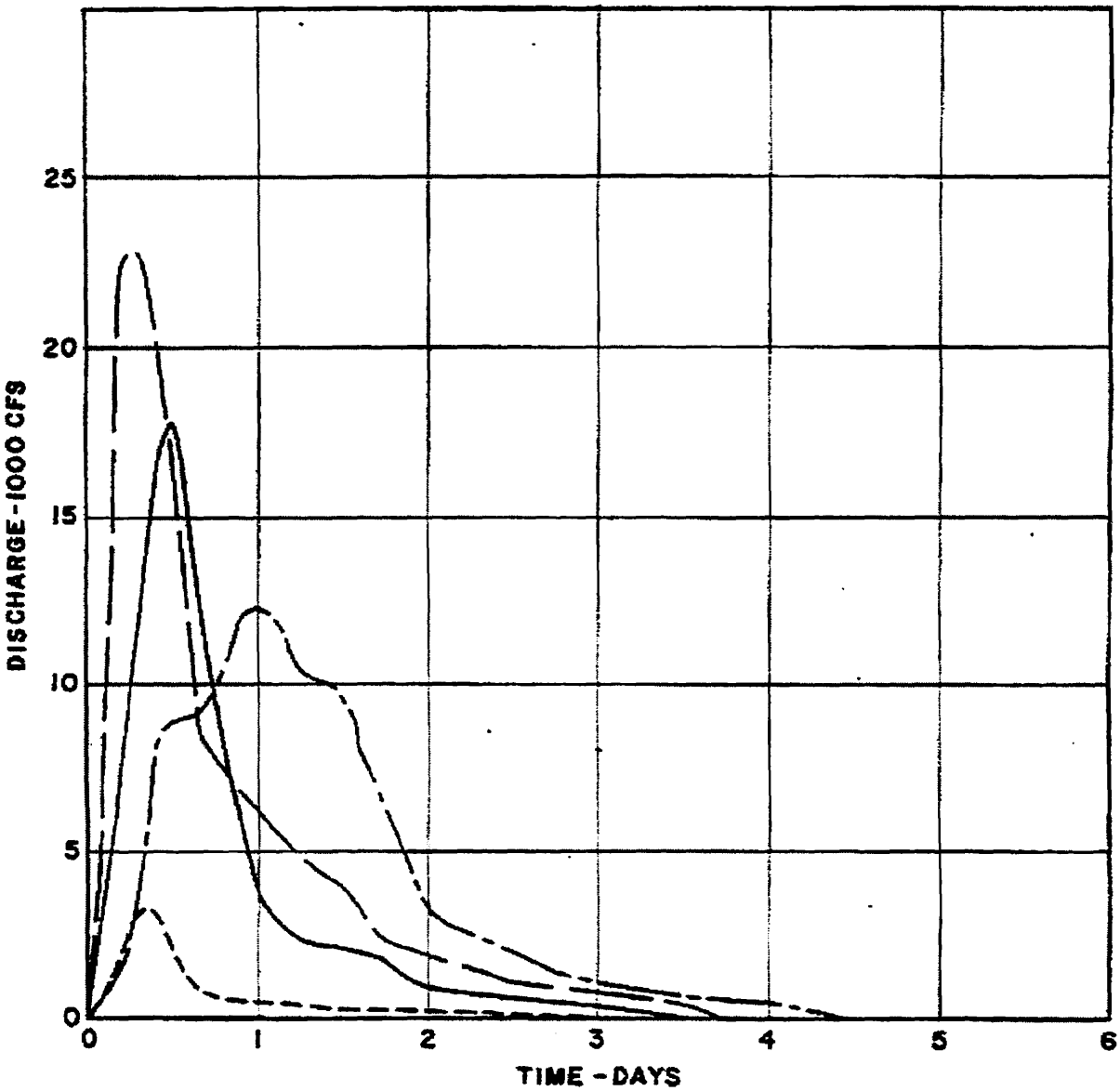

LEGEND:

AREA 10, WATAUGA DAM, 468 SQ. MI.
AREA 11, BOONE LOCAL, 669 SQ. MI.
AREA 12. FORT PATRICK HENRY LOCAL, 63 SQ. MI.
AREA 13, N. F. HOLSTON R. NR GATE CITY, 672 SQ. MI.

HISTORICAL

Revised by Amendment 17

6-HOUR UNIT HYDROGRAPHS
SHEET 3 OF 11
FIGURE 2.4.3-6

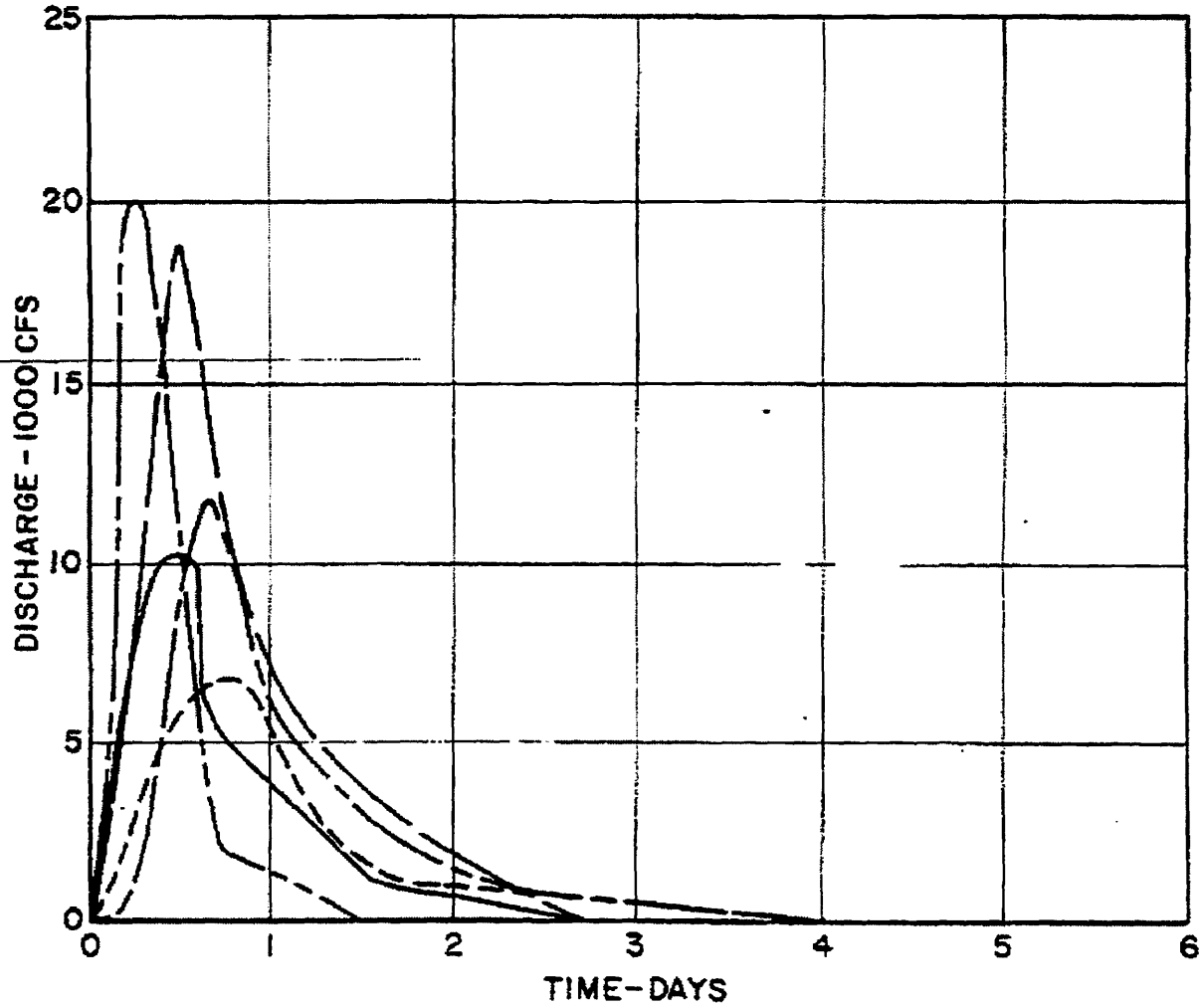

LEGEND:

- AREA 14. SURGOINSVILLE LOCAL, 299 SQ. MI.
- AREA 15. CHEROKEE LOCAL BELOW SURGOINSVILLE, 554 SQ. MI.
- AREA 16, HOLSTON RIVER LOCAL, 289 SQ. MI.
- AREA 17, LITTLE RIVER AT MOUTH, 379 SQ. MI.
- AREA 18, FORT LOUDOUN LOCAL, 323 SQ. MI.

HISTORICAL

Revised by Amendment 17

6-HOUR UNIT HYDROGRAPHS
SHEET 4 OF 11
FIGURE 2.4.3-6

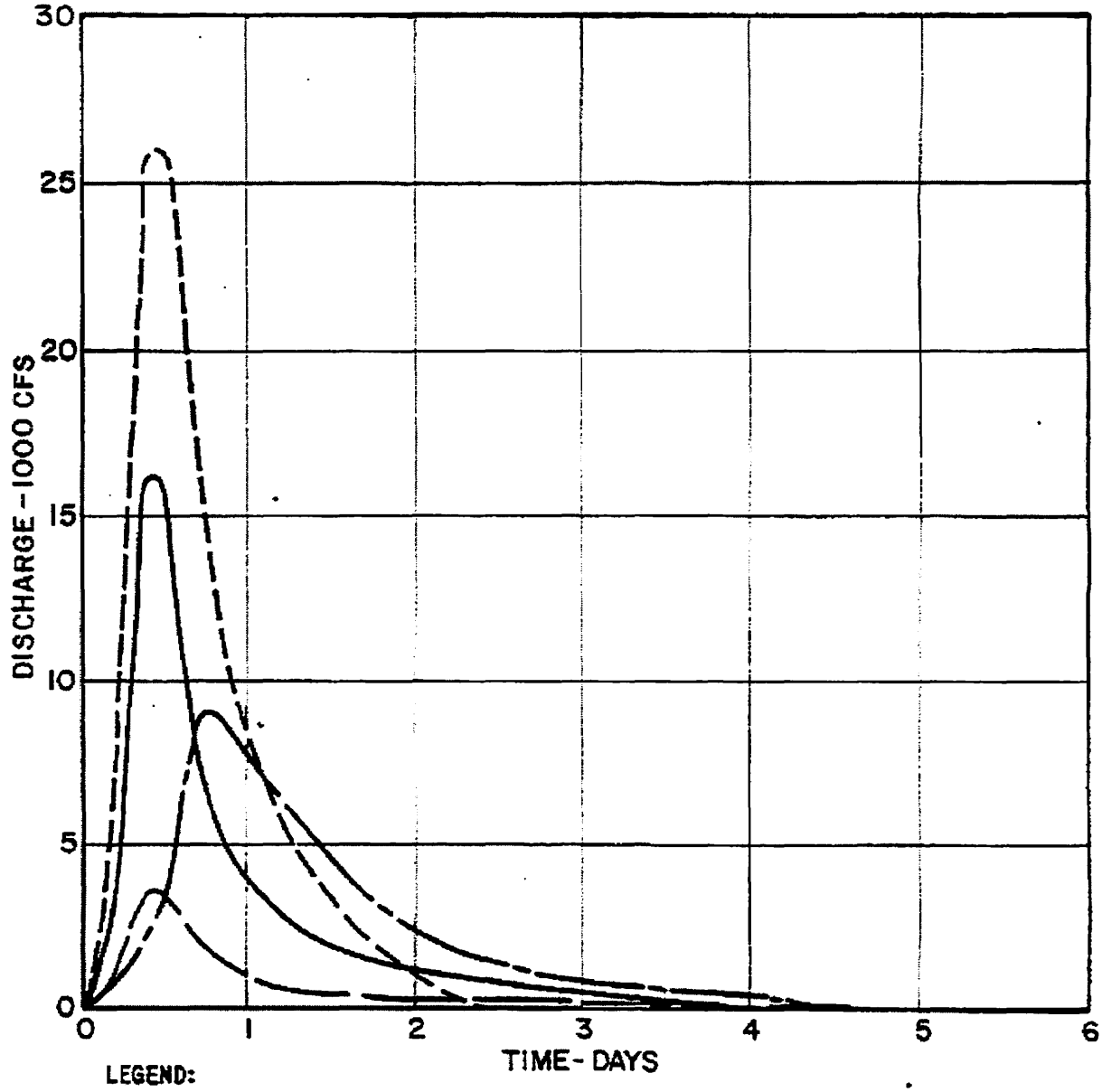

HISTORICAL

Revised by Amendment 17

6-HOUR UNIT HYDROGRAPHS
SHEET 5 OF 11
FIGURE 2.4.3-6

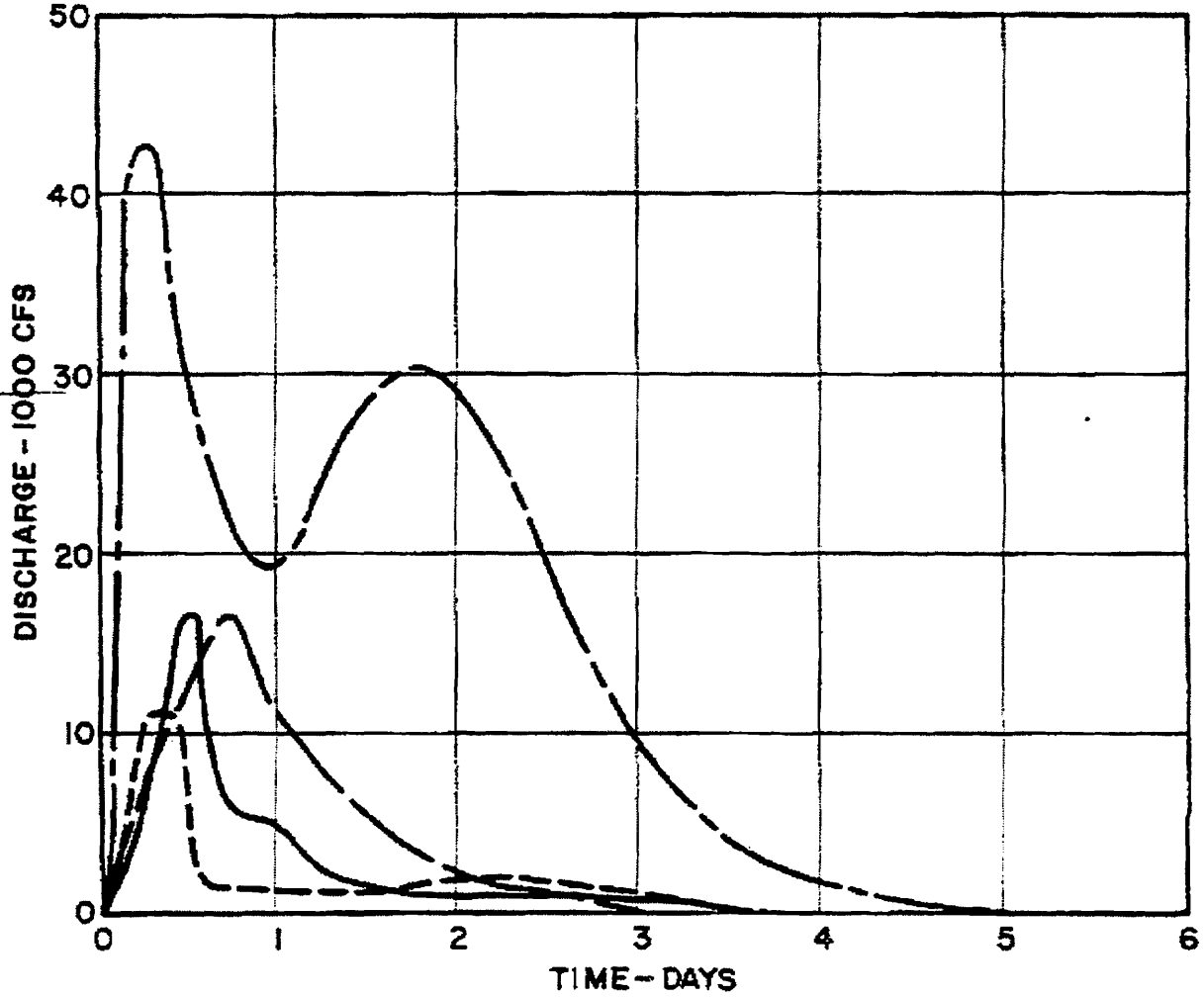

LEGEND:

AREA 23, LITTLE TENNESSEE R. LOCAL, FONTANA TO CHILHOWEE, 406 SQ. MI.

AREA 24, LITTLE TENNESSEE R. LOCAL, CHILHOWEE TO TO TELLICO DAM, 650 SQ. MI.

AREA 25, WATTS BAR LOCAL ABOVE CLINCH RIVER, 293 SQ. MI.

AREA 26, NORRIS DAM, 2912 SQ. MI.

HISTORICAL

Revised by Amendment 17

6-HOUR UNIT HYDROGRAPHS
SHEET 6 OF 11
FIGURE 2.4.3-6

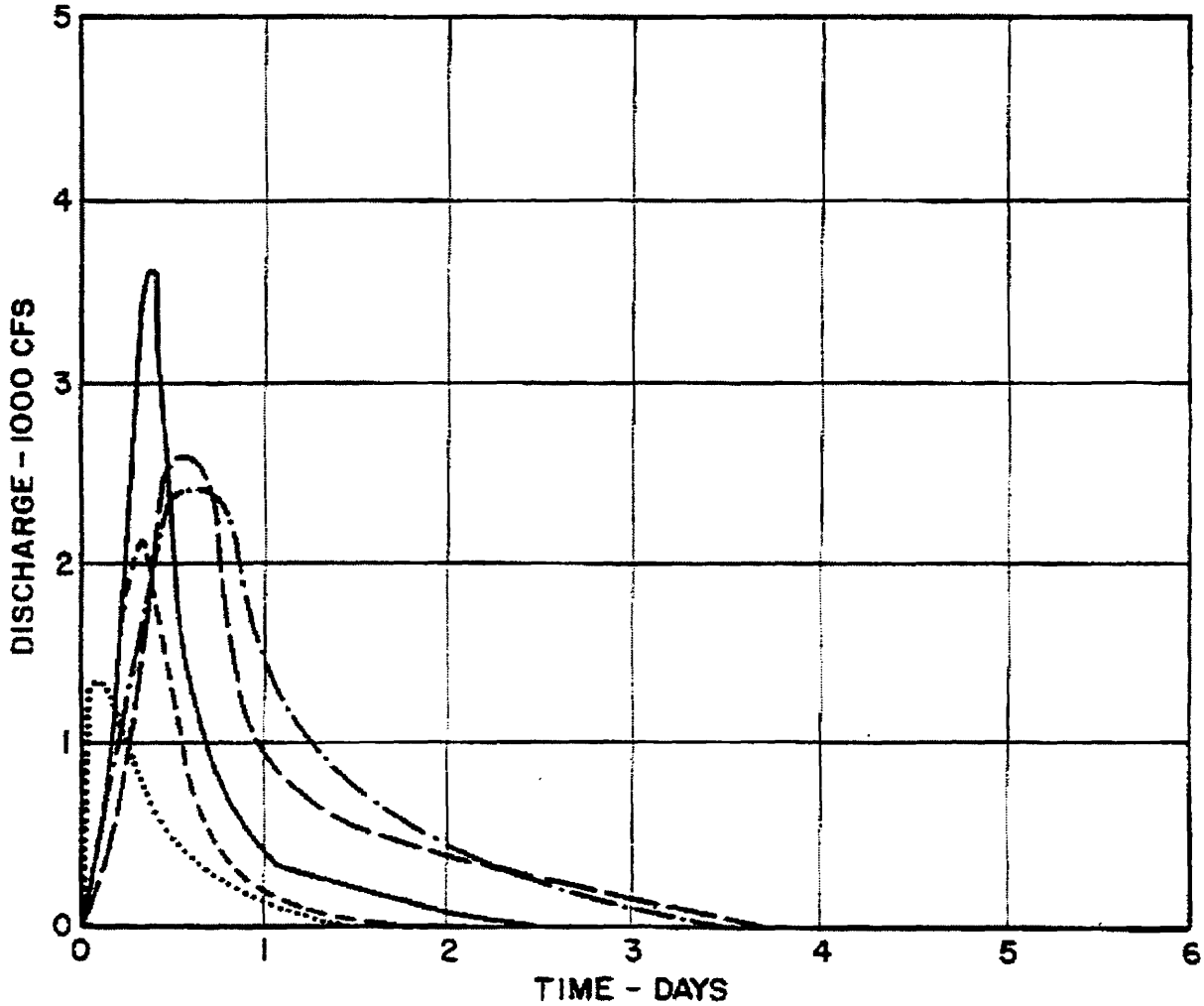

LEGEND:

- AREA 27, COAL CREEK, 36.6 SQ. MI.
- AREA 29, HINDS CREEK, 66.4 SQ. MI.
- AREA 30, BULLRUN CREEK, 104 SQ. MI.
- AREA 31, BEAVER CREEK, 90.5 SQ. MI.
- AREAS 28 AND 32, CLINCH RIVER LOCAL AREAS, 22. 2 SQ. MI.

HISTORICAL

Revised by Amendment 17

2-HOUR UNIT HYDROGRAPHS
SHEET 7 OF 11
FIGURE 2.4.3-6

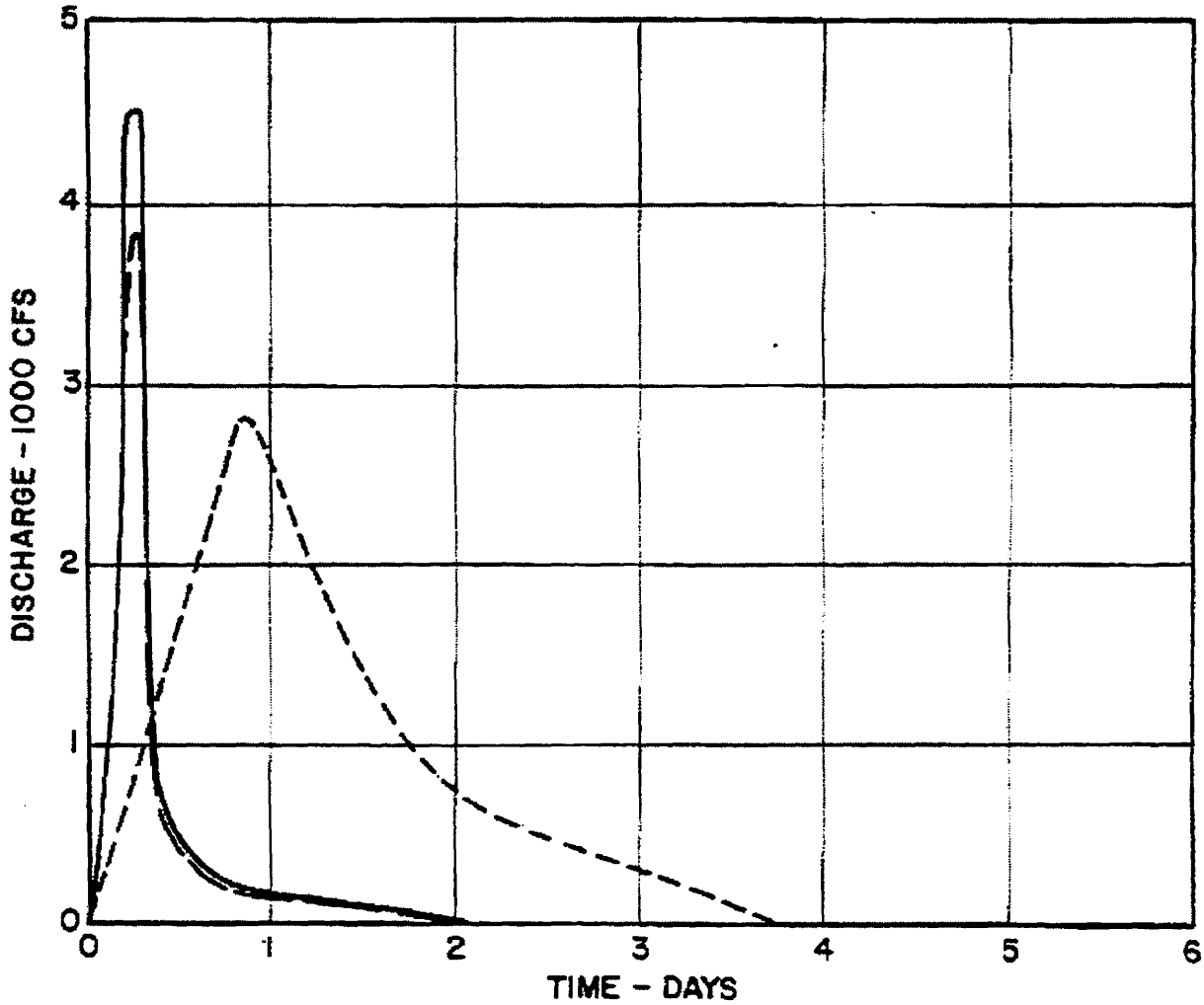

LEGEND:

AREA 33, LOCAL AREA ABOVE MI. 16, 37 SQ. MI.
AREA 34, POPLAR CREEK, 136 SQ. MI.
AREA 36, LOCAL AREA AT MOUTH, 32 SQ. MI.

HISTORICAL

Revised by Amendment 17

2-HOUR UNIT HYDROGRAPHS
SHEET 8 OF 11
FIGURE 2.4.3-6

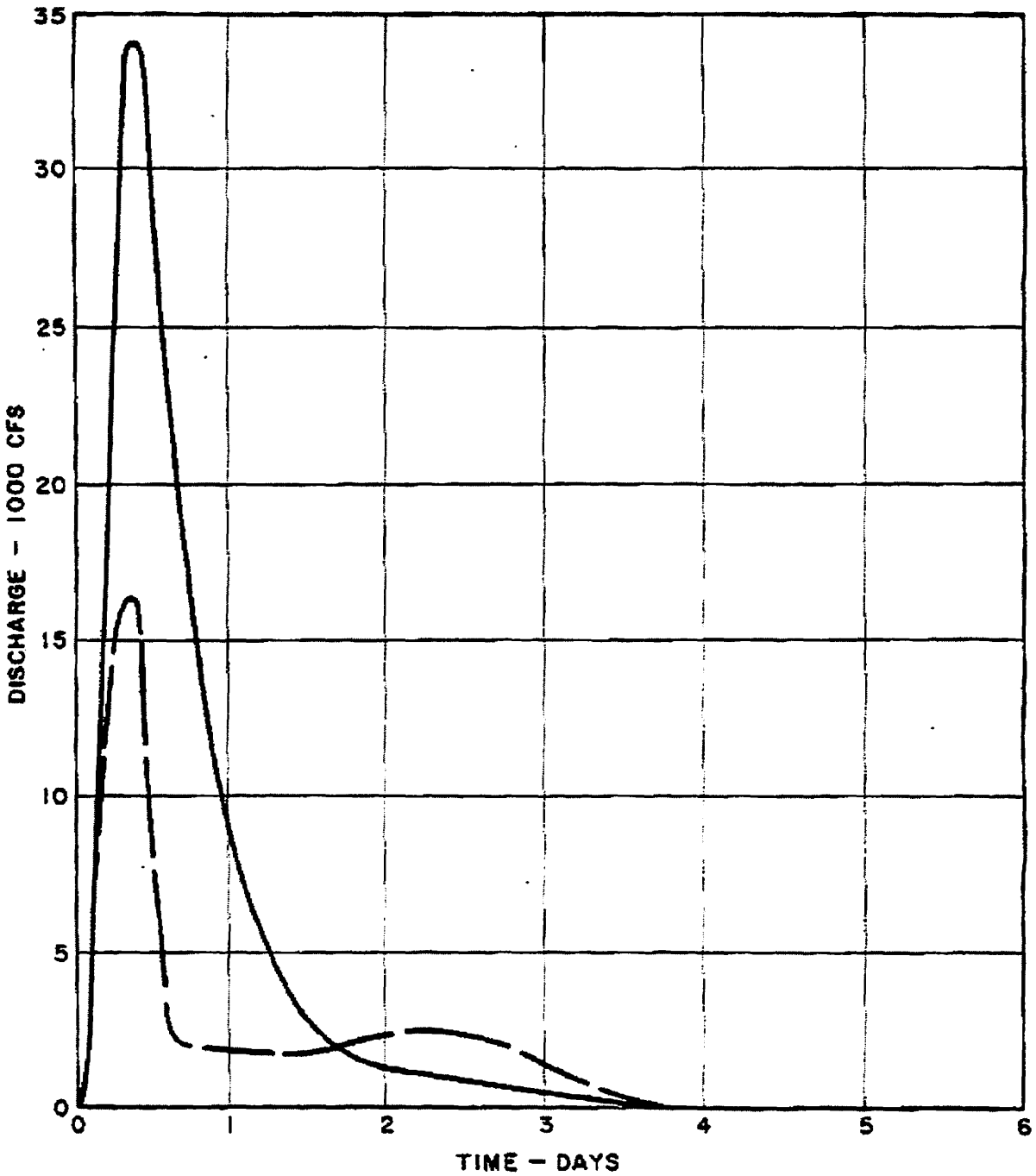

LEGEND:

——— AREA 35, EMORY RIVER AT MOUTH, 865 SQ. MI.

— — AREA 37, WATTS BAR LOCAL BELOW CLINCH RIVER, 427 SQ. MI.

HISTORICAL Revised by Amendment 17

6-HOUR UNIT HYDROGRAPHS
SHEET 9 OF 11
FIGURE 2.4.3 -6

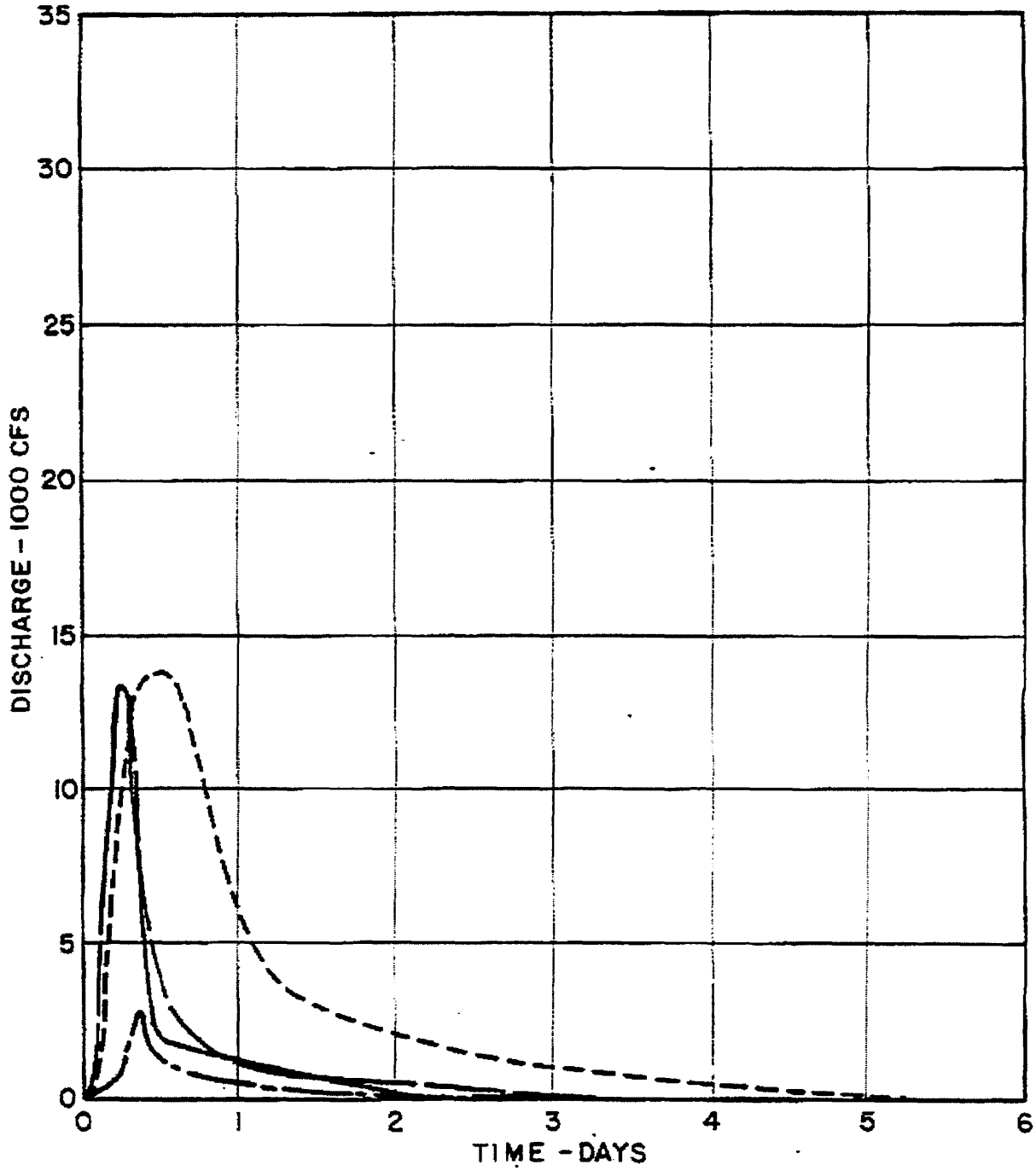

LEGEND:

- AREA 38, CHATUGE DAM, 190 SQ. MI.
- AREA 39, NOTTELY DAM, 215 SQ. MI.
- AREA 40, HIWASSEE LOCAL, 564 SQ. MI.
- AREA 41, APALACHIA, 50 SQ. MI.

HISTORICAL

Revised by Amendment

6-HOUR UNIT HYDROGRAPHS
SHEET 10 OF 11
FIGURE 2.4.3-6

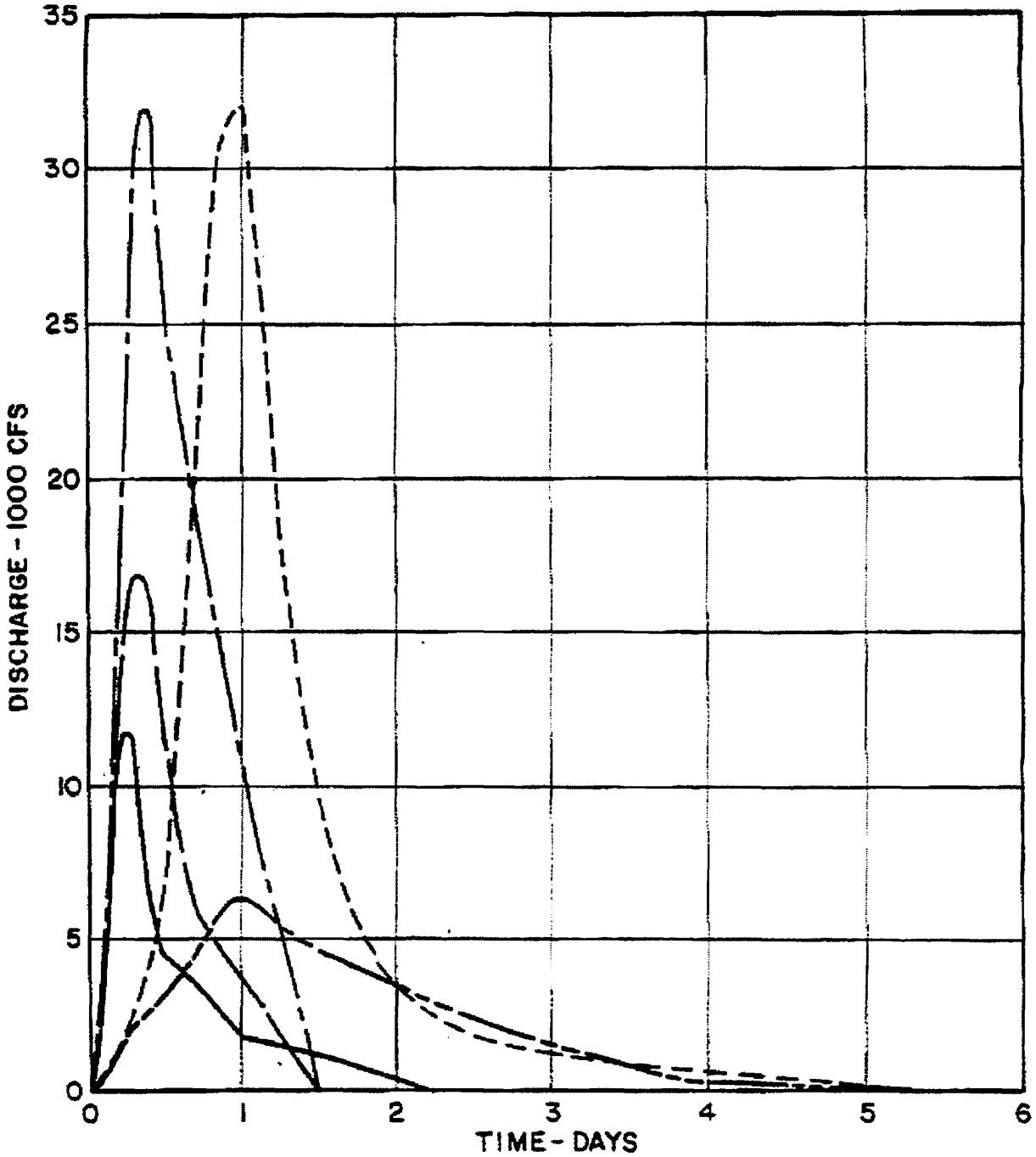

LEGEND:

- AREA 42, BLUE RIDGE DAM, 232 SQ. MI.
- AREA 43, OCOEE NO. 1 TO BLUE RIDGE DAM. 363 SQ. MI.
- AREA 44, LOWER HIWASSEE LOCAL, 1087 SQ. MI.
- AREA 45, CHICKAMAUGA LOCAL, 780 SQ. MI.

HISTORICAL

Revised by Amendment 17

6-HOUR UNIT HYDROGRAPHS
SHEET 11 OF 11
FIGURE 2.4.3-6

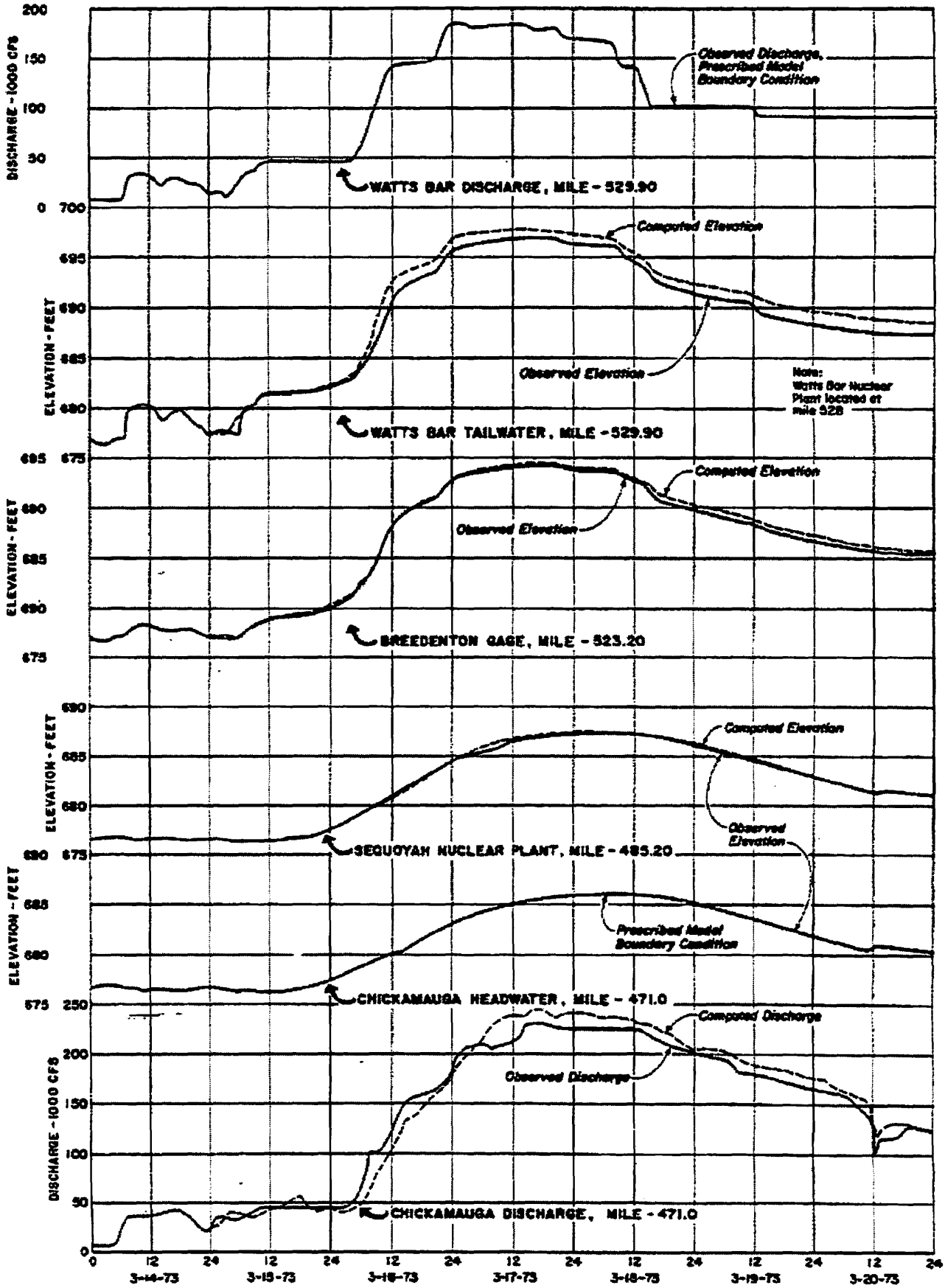

FIGURE 2.4.3-7 1973 FLOOD - CHICKAMAUGA RESERVOIR UNSTEADY FLOW MODEL VERIFICATION

HISTORICAL

Revised by Amendment 17

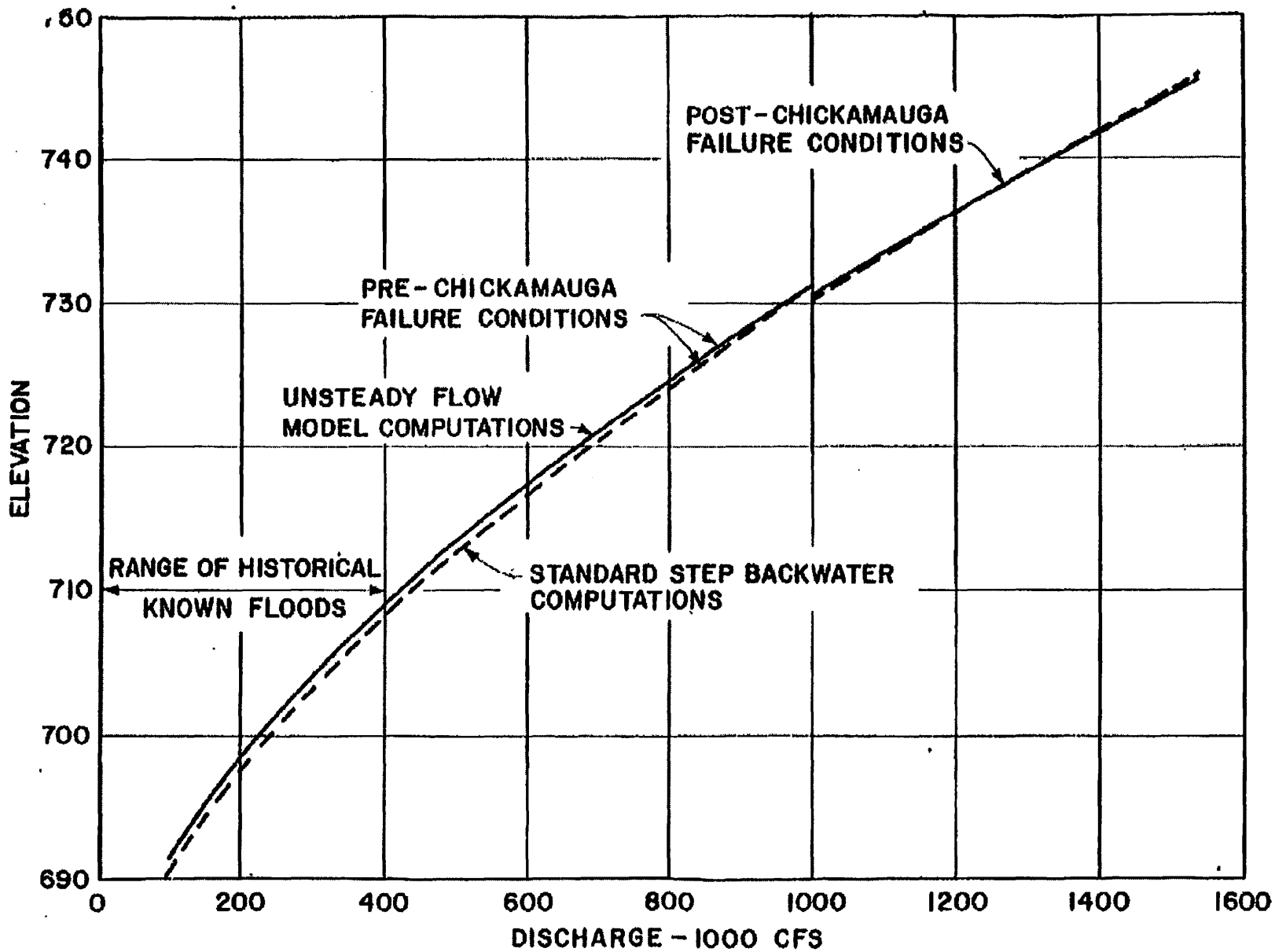

STEADY-STATE MODEL VERIFICATION
WATTS BAR DAM TAILWATER RATING CURVE
FIGURE 2.4.3-8

Revised by Amendment 17

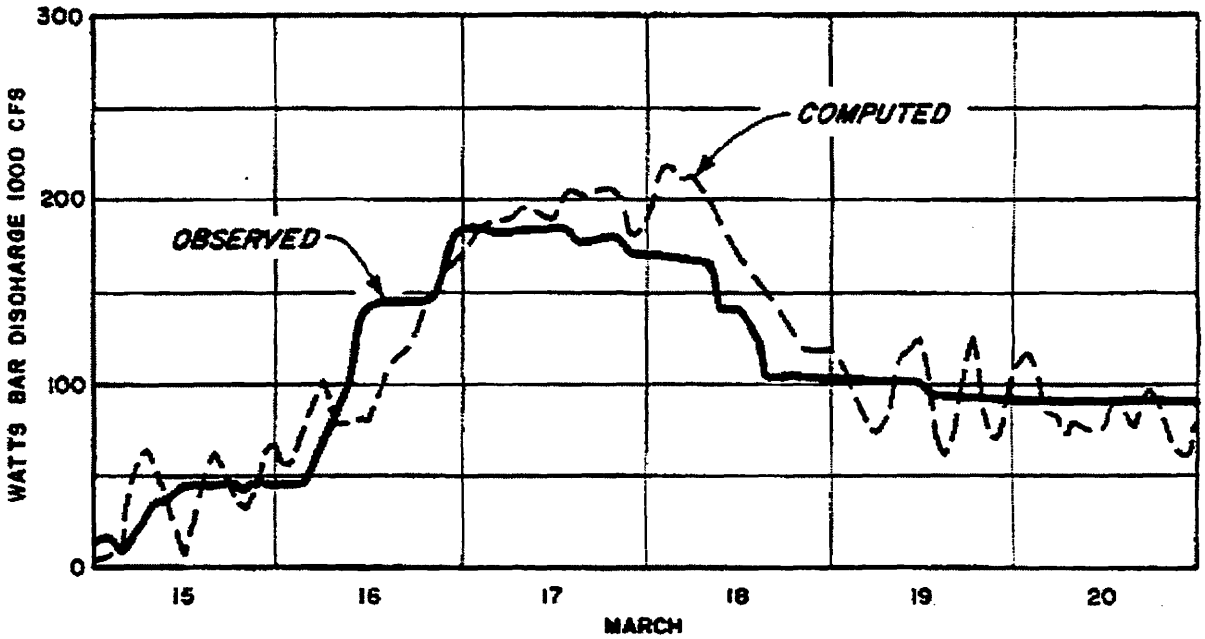

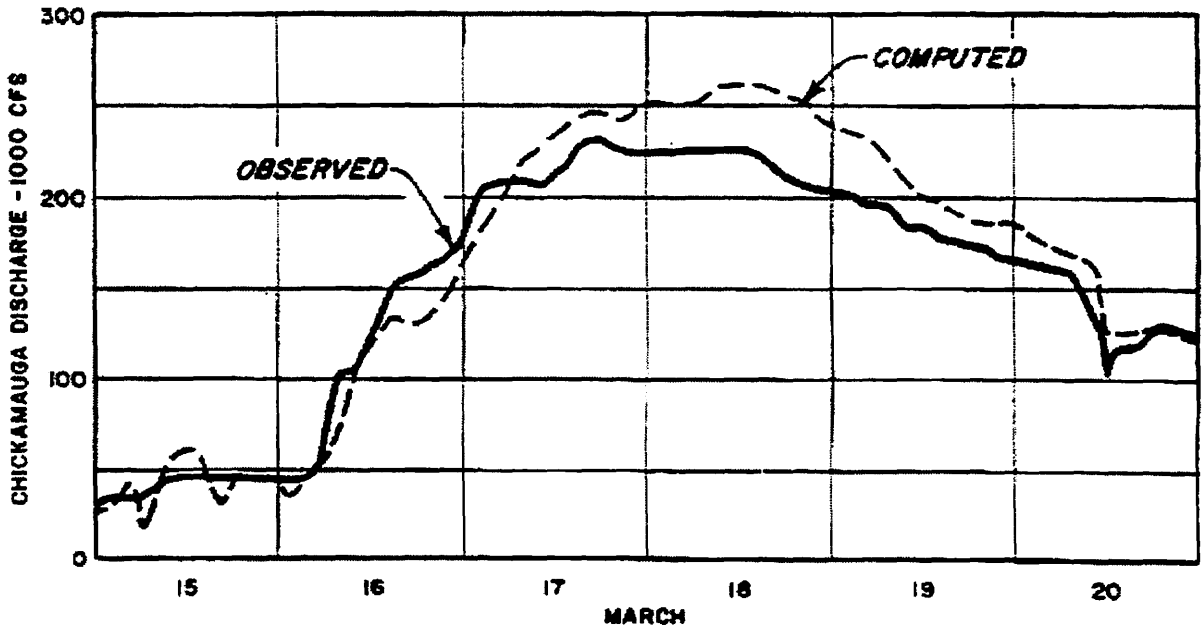

HYDROLOGIC MODEL VERIFICATION - 1973 FLOOD

FIGURE 2.4.3-9

HISTORICAL

Revised by Amendment 17

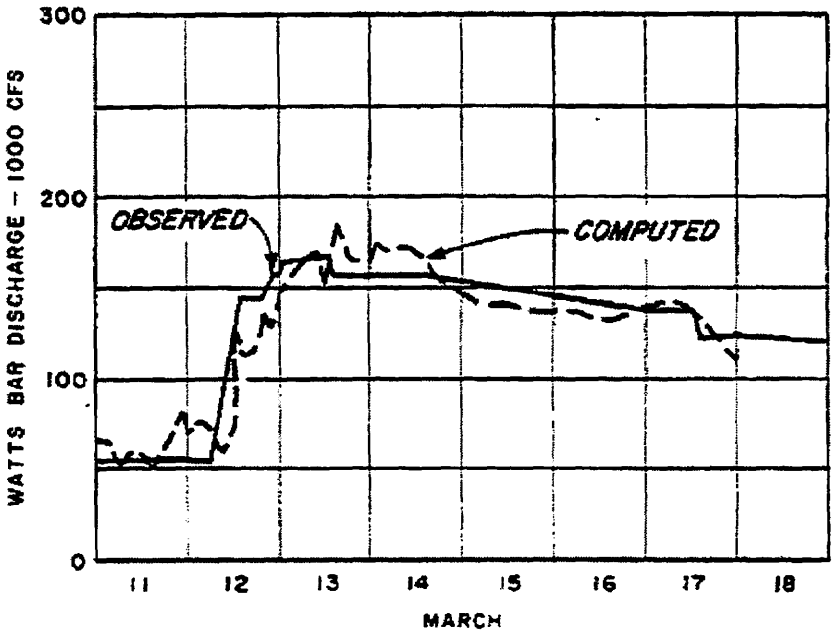

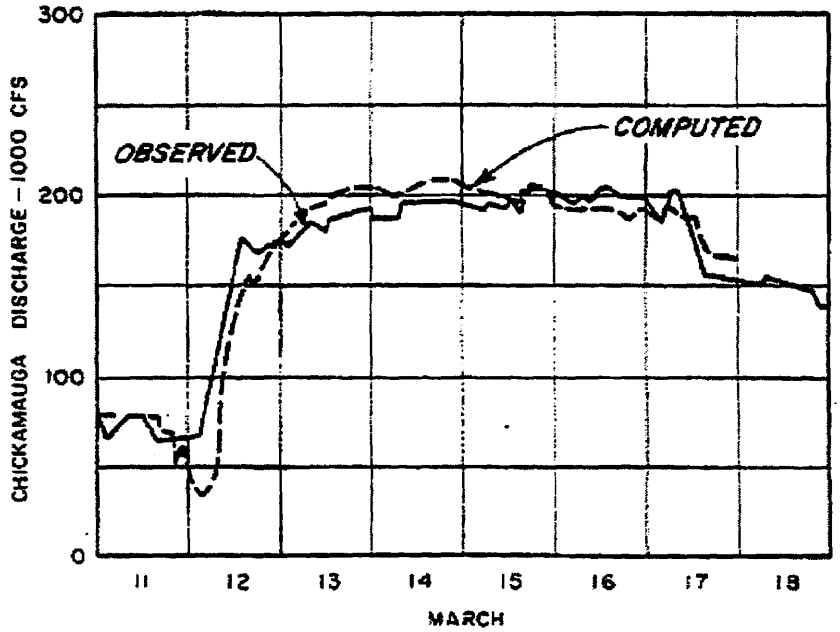

HYDROLOGIC MODEL VERIFICATION – 1963 FLOOD

FIGURE 2.4.3 - 10

HISTORICAL

Revised by Amendment 17

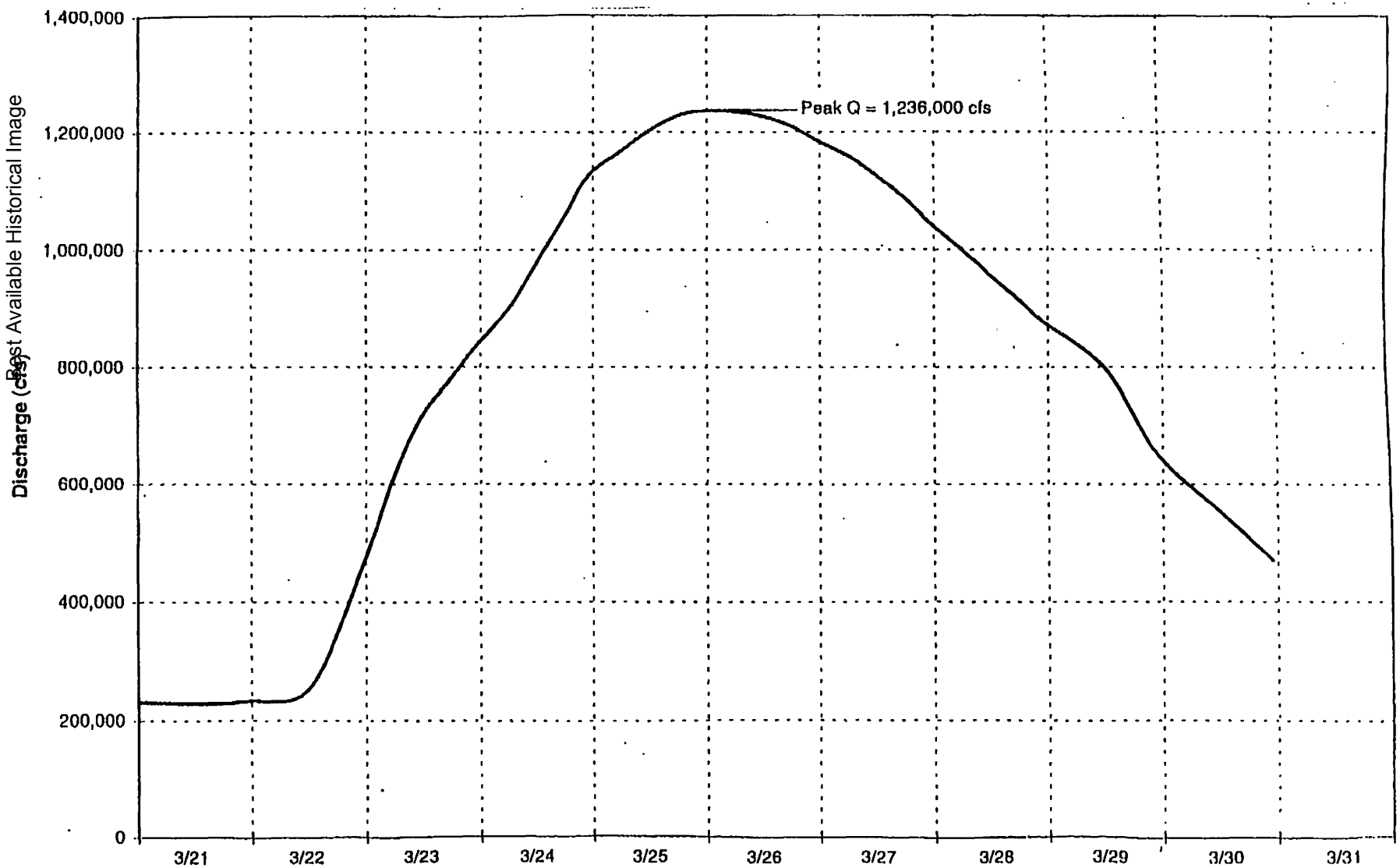

Best Available Historical Image

Sequoyah Nuclear Plant Probable Maximum Flood Discharge

Figure 2.4.3-11

Revised by Amendment 17

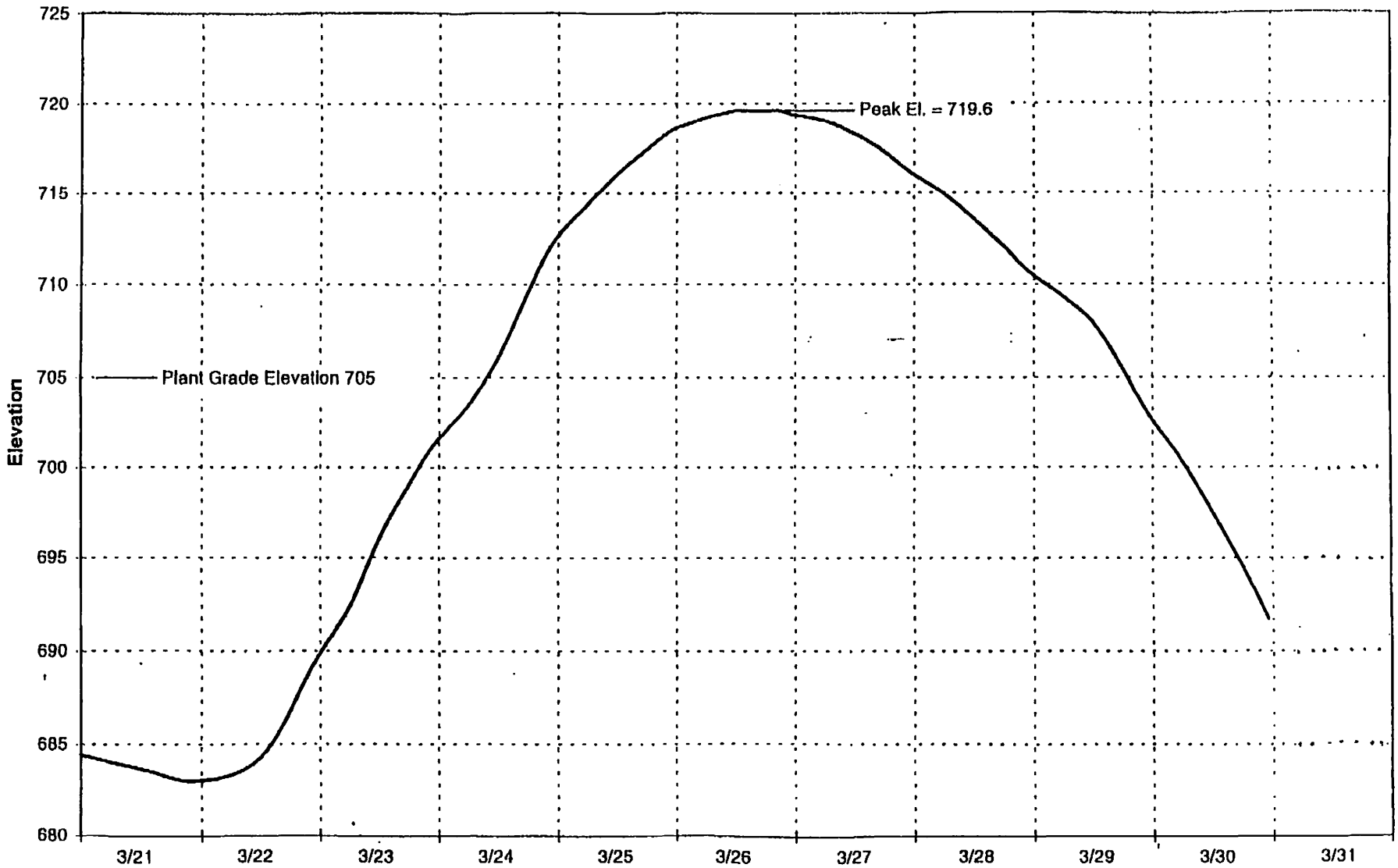

Sequoyah Nuclear Plant Probable Maximum Flood Elevation

Revised by Amendment 17

Figure 2.4.3-12

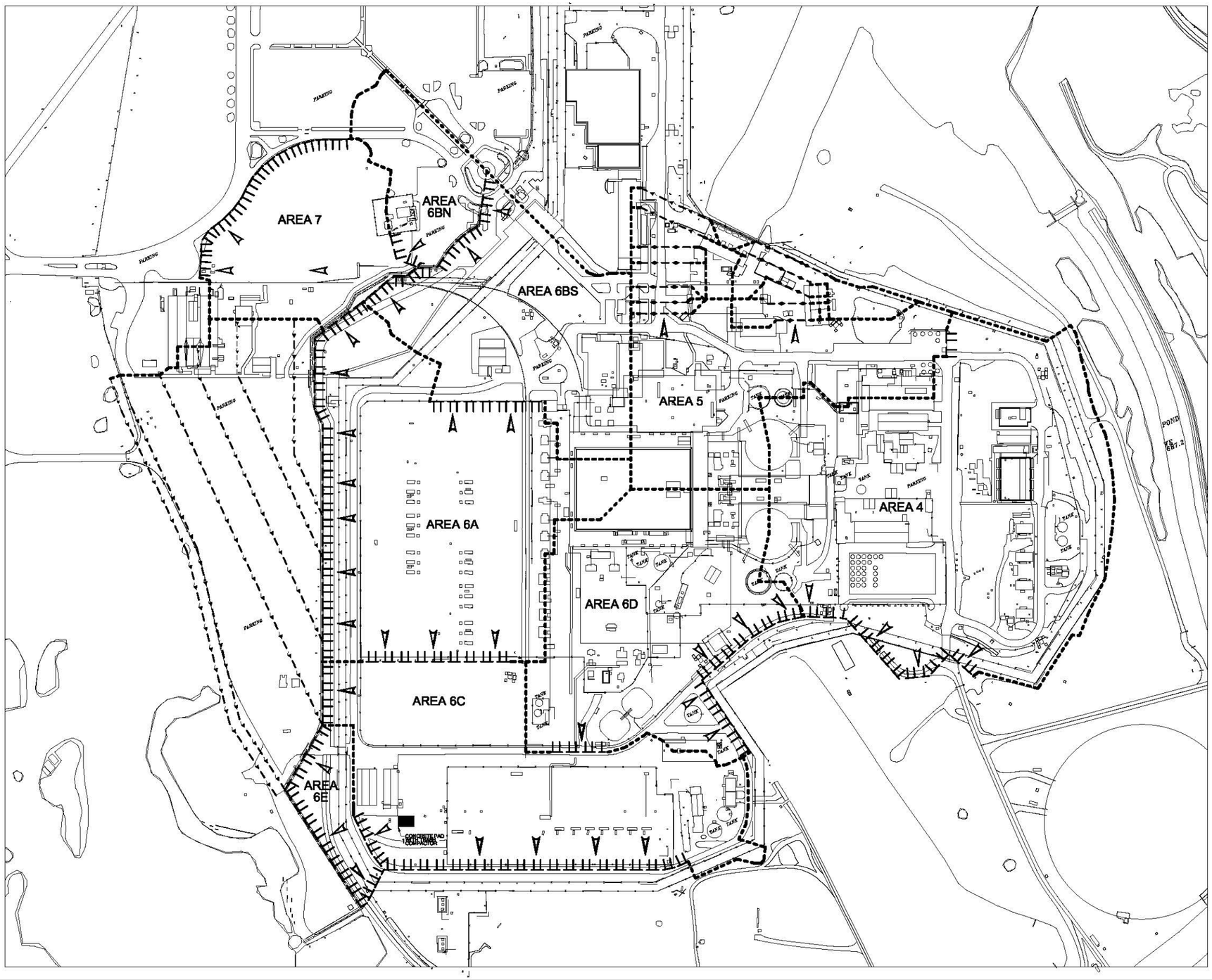

NOTE:
THIS DRAWING WAS CREATED FROM TVA LIDAR/CAD DATA CONTAINED IN CALCULATION CDQ00000002013000057 REV.1 ATTACHMENT 3

DRAINAGE / ROUTED STORAGE AREA DIVIDE

CONTROL SECTION - TRANSIENT FLOW CROSS-SECTION

CONTROL SECTION - WEIR FLOW LOCATION

PMP FLOW DIRECTION

TVA STATE PLANE

N

SCALE: 1 INCH = 100 FEET

SEQUOYAH NUCLEAR PLANT
FINAL SAFETY
ANALYSIS REPORT

FIGURE 2.4.3-13A
GENERAL GRADING FOR
SITE DRAINAGE
(REVISED BY AMENDMENT 26)

CAD MAINTAINED DRAWING

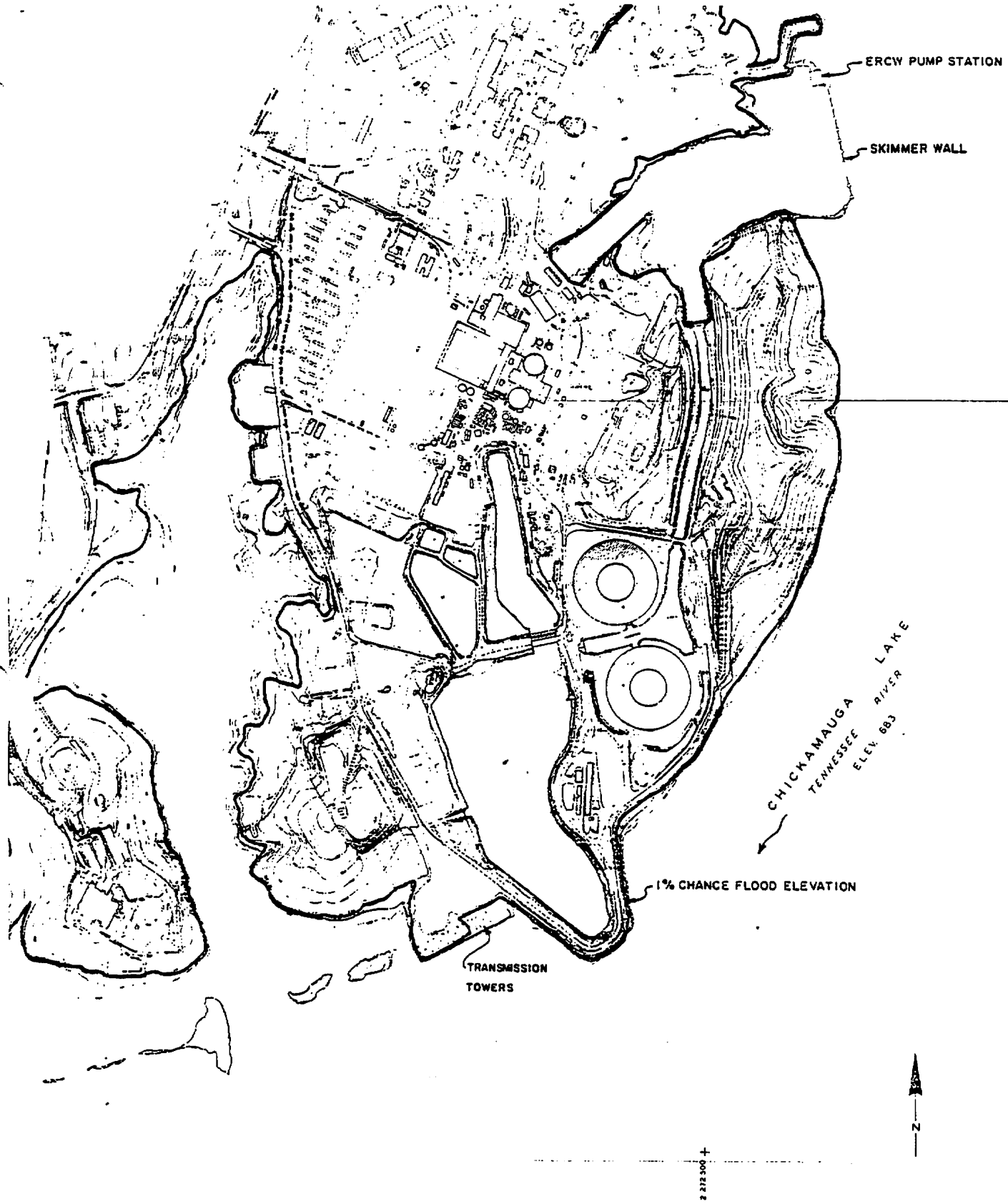

ERCW Pump Station Location

FIGURE 2.4.3-14

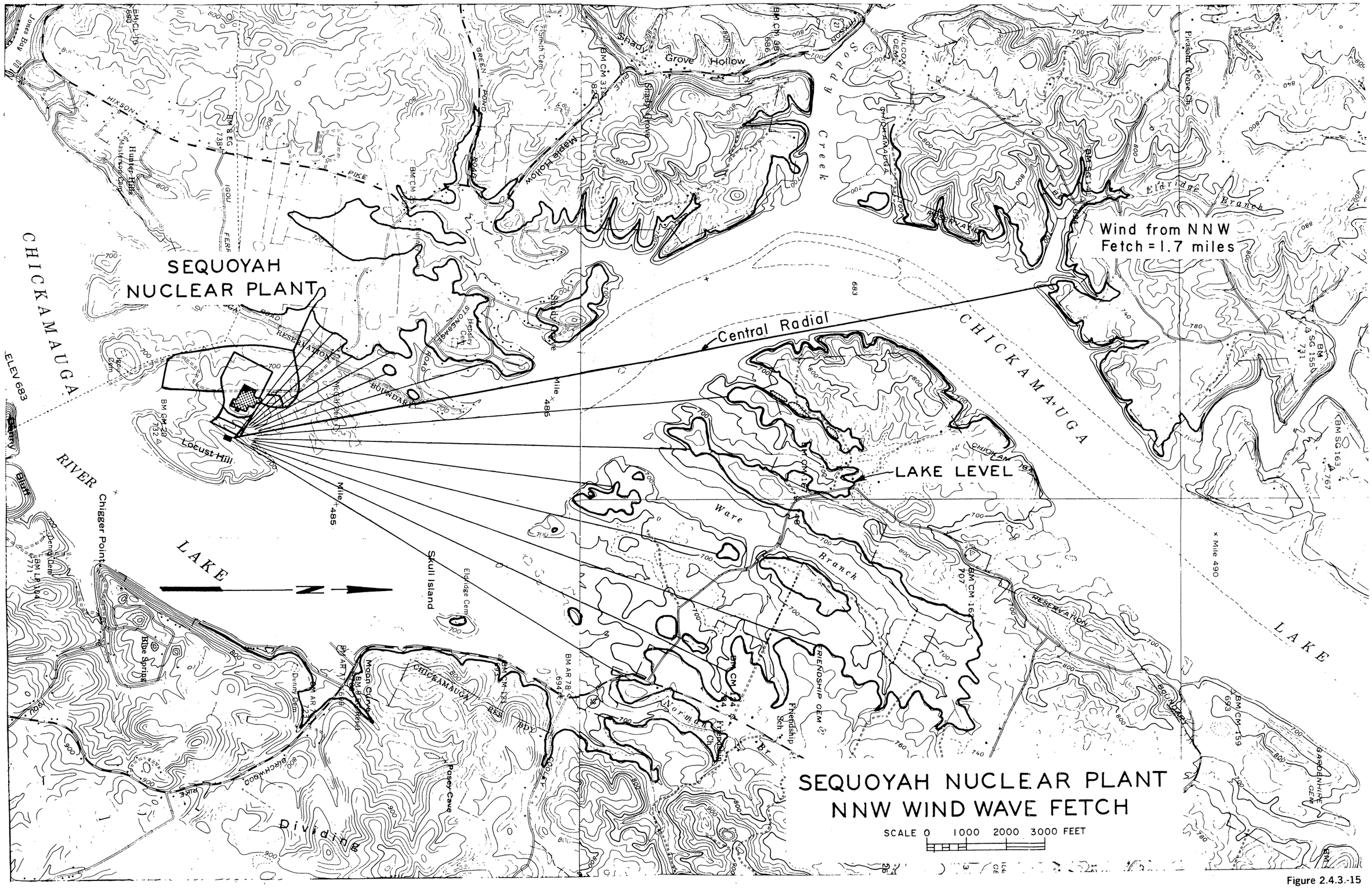

SEQUOYAH NUCLEAR PLANT
NNW WIND WAVE FETCH

SCALE 0 1000 2000 3000 FEET

Figure 2.4.3.-15

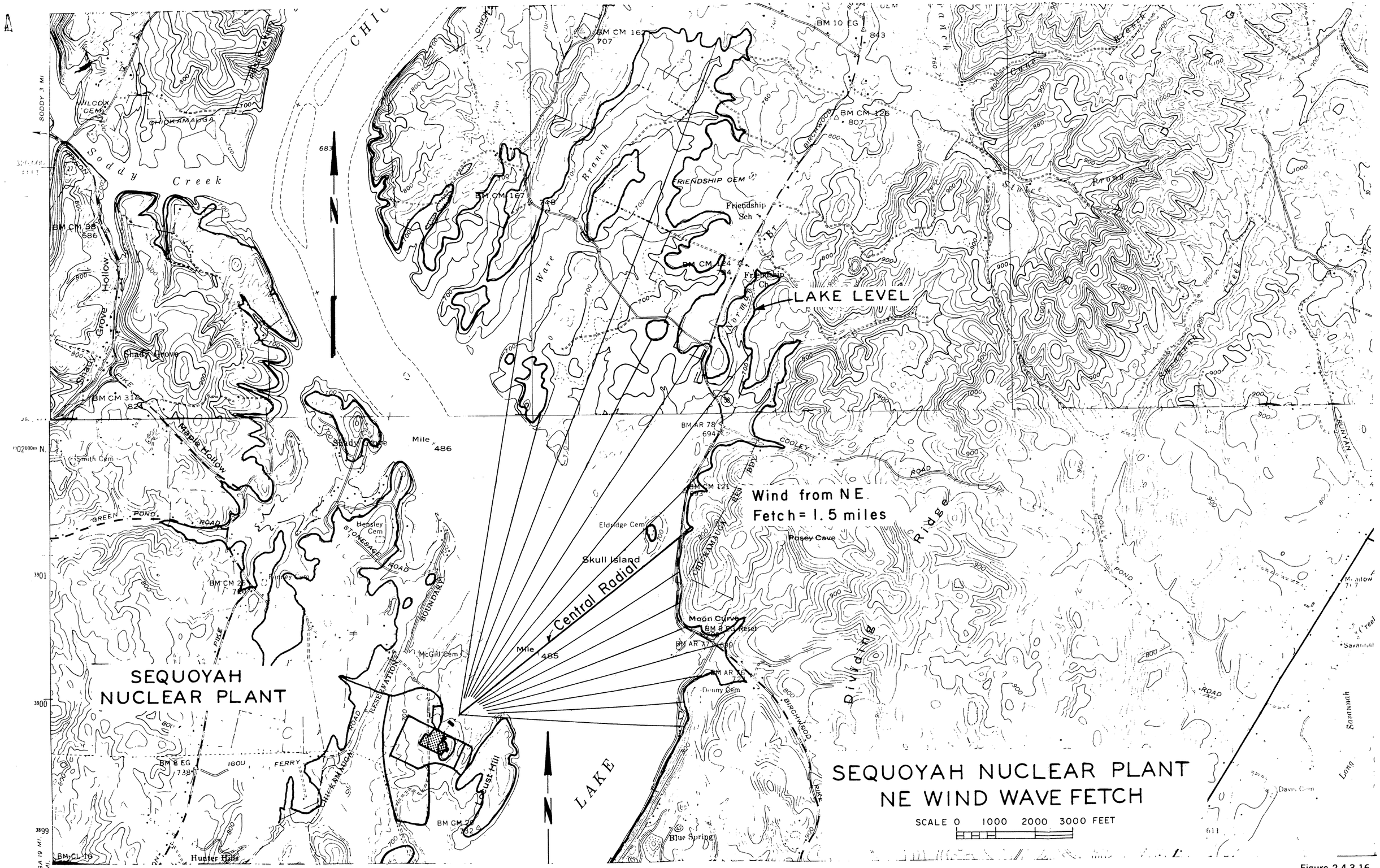

Figure 2.4.3-16

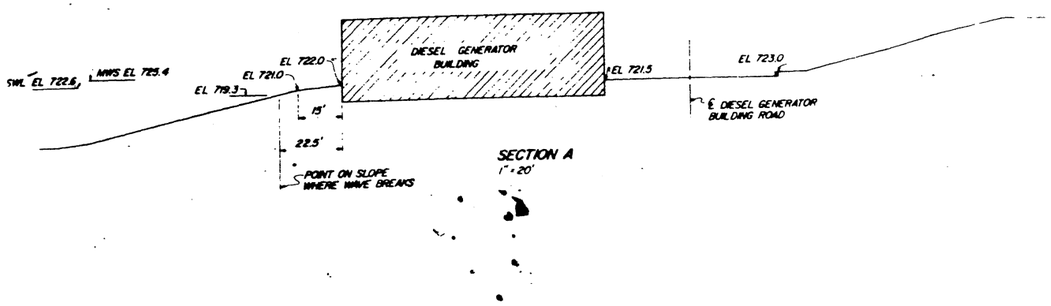

SECTION A
1" = 20'

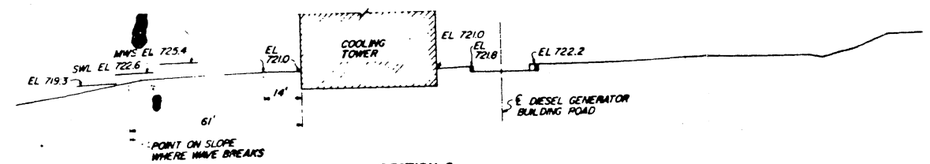

SECTION C
1" = 20'

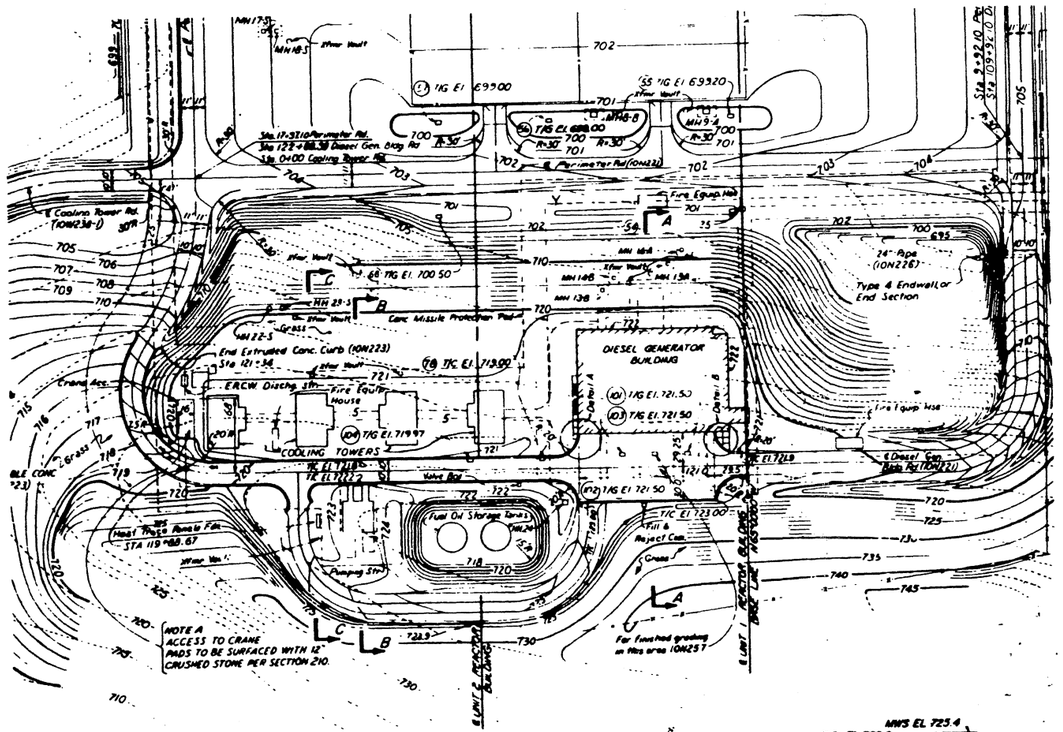

LEGEND
MWS = MAXIMUM WATER SURFACE IN RESERVOIR
SWL = STILL WATER LEVEL IN RESERVOIR

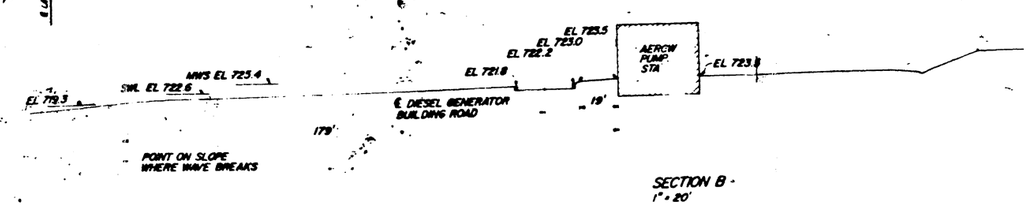

SECTION B
1" = 20'

Figure 2.4.3-17

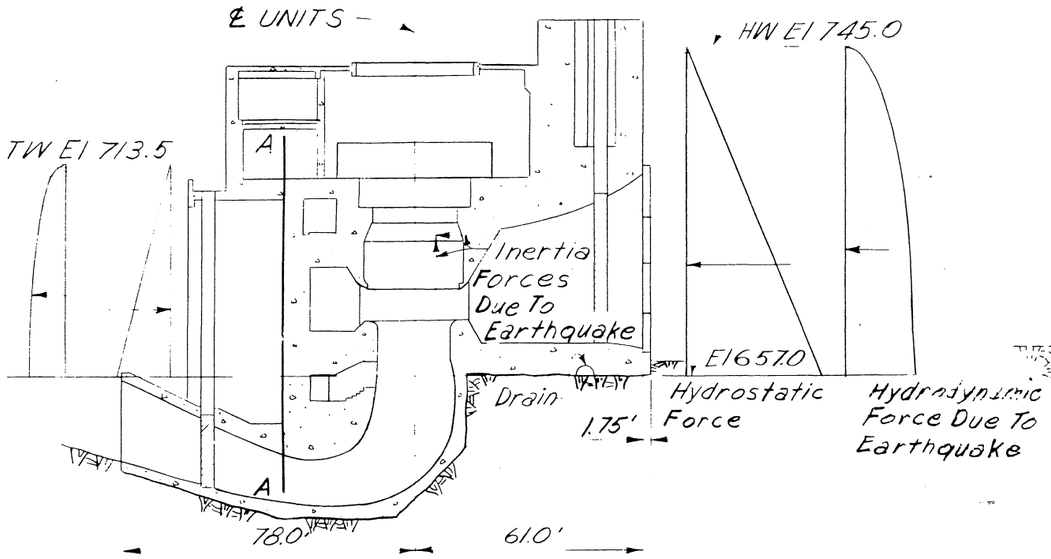

SECTION – POWERHOUSE

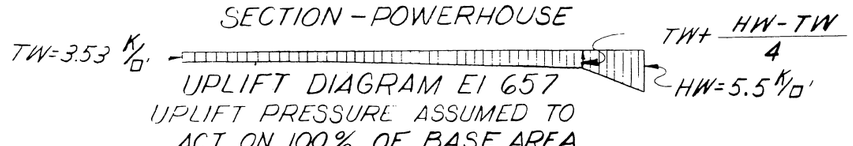

UPLIFT DIAGRAM El 657
UPLIFT PRESSURE ASSUMED TO ACT ON 100% OF BASE AREA

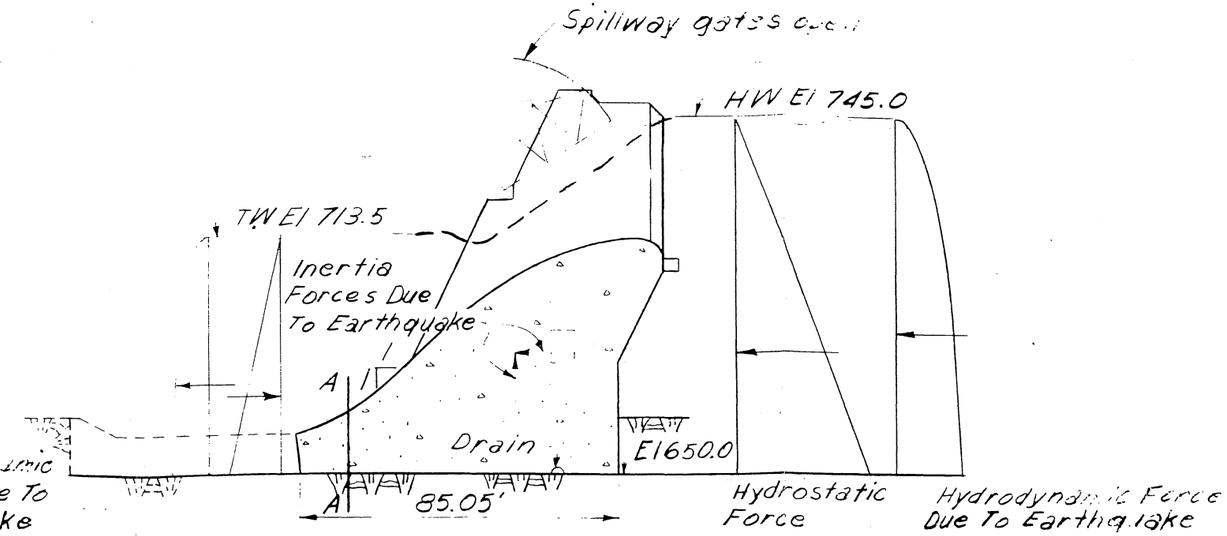

TYPICAL BLOCK-SPILLWAY

UPLIFT DIAGRAM El 650
UPLIFT PRESSURE ASSUMED TO ACT ON 100% OF BASE AREA

NOTES:
1. OBE earthquake inertia forces assumed as 0.09 g horizontally and 0.06 g vertically at the base and amplified up the structure.
2. Spillway gates were assumed open for this analysis.

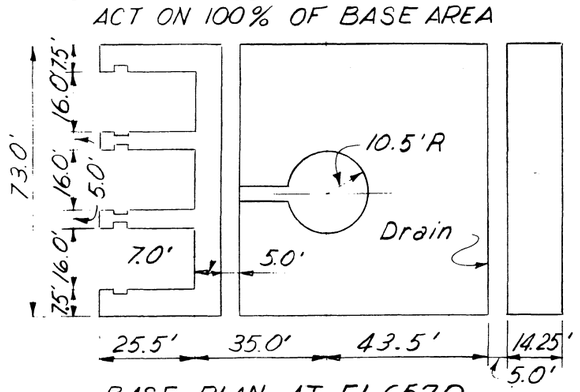

BASE PLAN AT El 657.0

Note A:
The powerhouse and spillway structures are well keyed into the rock foundation. The rock formations are severely folded with the dip generally in a dnstr direction varying from 10° to 40°. Any failure would require cross bed shear of the rock. Rock of this type has cross bed shear strength much in excess of that reqd for a Factor of Safety of 1.

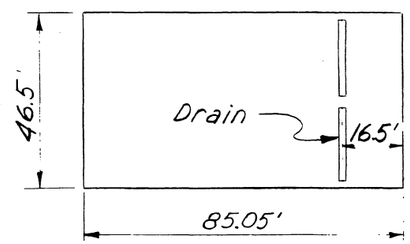

BASE PLAN AT El 650.0

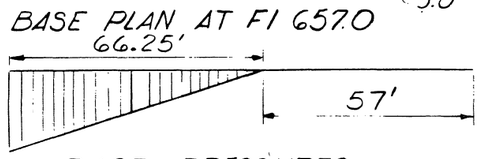

BASE PRESSURES

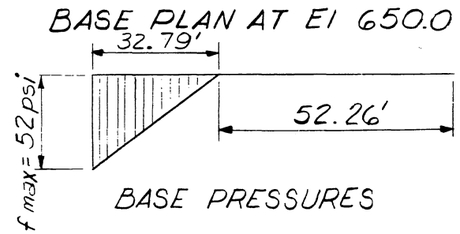

BASE PRESSURES

* Shear, S, that is reqd for Q=1 is calculated from shear-friction formula, $Q = \frac{0.65\Sigma V + SA}{\Sigma H}$. A is assumed to be entire base area.

ΣV	ΣH	ΣH/ΣV	Avg Shear, S	S Reqd For Q=1	f max	FS=ΣMR/ΣMO	Vertical Shear on Plane A-A
27,207	26,232	0.96	27.6 psi (entire base)	Note A 9 psi * (21.5 psi)**	156 psi	1.21	47.2 psi

ΣV	ΣH	ΣH/ΣV	Avg. Shear, S	S Reqd For Q=1	f max	FS=ΣMR/ΣMO	Vertical Shear on Plane A-A
5686K	13,493K	2.37	24 psi	Note A 17.2 psi * (44.7 psi)**	52 psi	1.04	29 psi

** Shear, S, reqd for Q=1 considering portion of base in compression (no tension), instead of entire base area.

REV NO	DATE	MADE	CHKD	SUPV	INSP	SUBM	RECM
1	4/14/78	GCL	FSC	CDW			

REV TO SHOW AMPLIFIED EARTHQUAKE ANALYSIS

DSGN. NL DRWN. DL.K.S CHKD. S.L.S. TRCD. ENGINEER COMP. SUPV. INSP.

Scale 1"=40'

POWERHOUSE & SPILLWAY

RESULTS OF ANALYSIS FOR OPERATING BASIS EARTHQUAKE

WATTS BAR DAM

FIGURE 2.4.4-1
Revised by Amendment 6.

Best Available Historical Image

Notes:
1. Analysis was made using the standard slip circle method.
2. For the original stability analysis see Watts Bar Computations E-23-2, and "Report on Soil Tests and Stability Analysis, Watts Bar Earth Embankment" Report No. 9-115.
3. Shear strengths of materials same as used in original analysis.

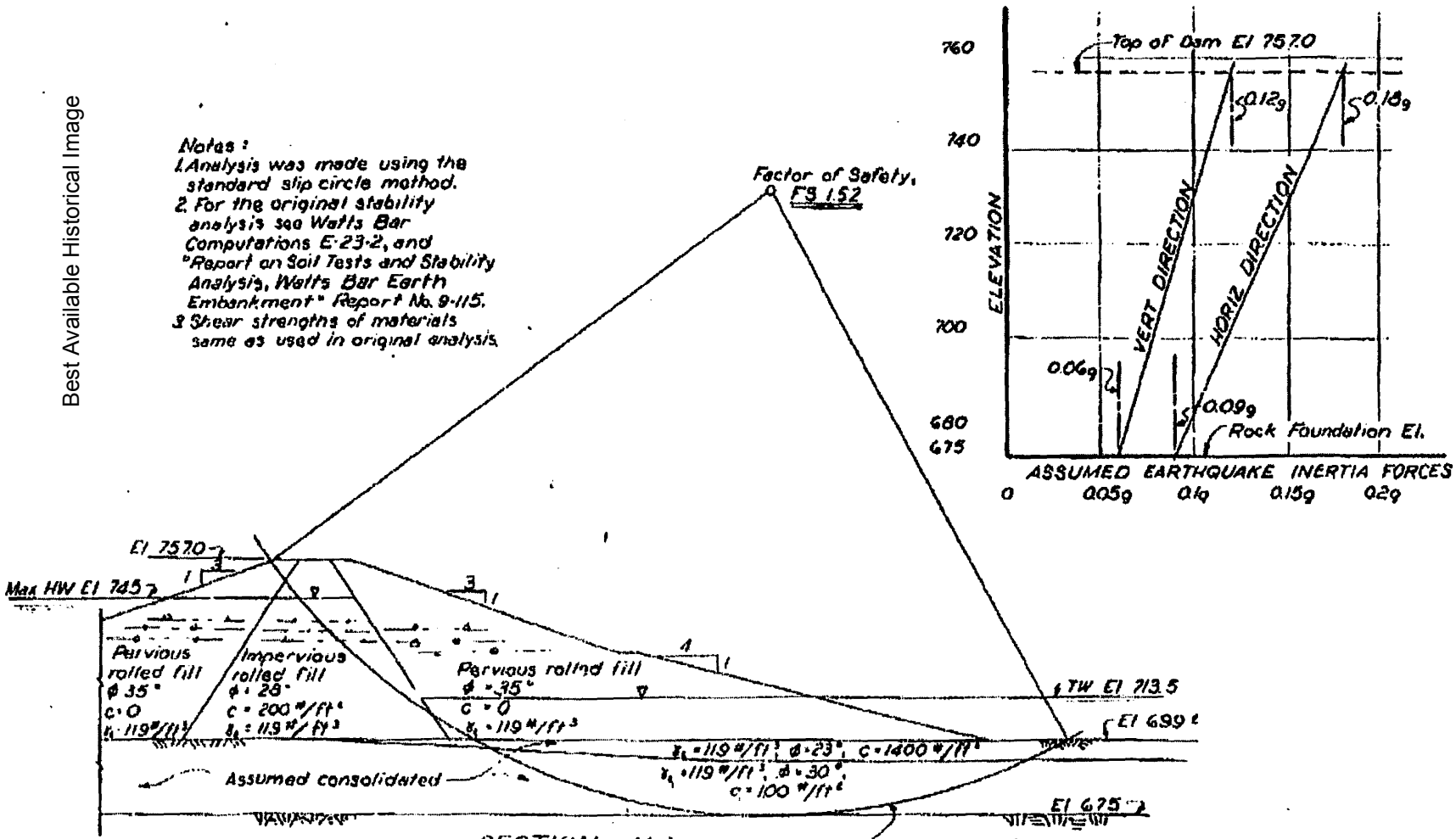

SECTION N-N
(STA 30 +60±)
FROM ORIGINAL ANALYSIS
Scale 1" = 30'

HISTORICAL

Revised by Amendment 17

Figure 2.4.4-2
Embankment Watts Bar
Dam, Results of Analysis
for 1/2 SSE

WATTS BAR

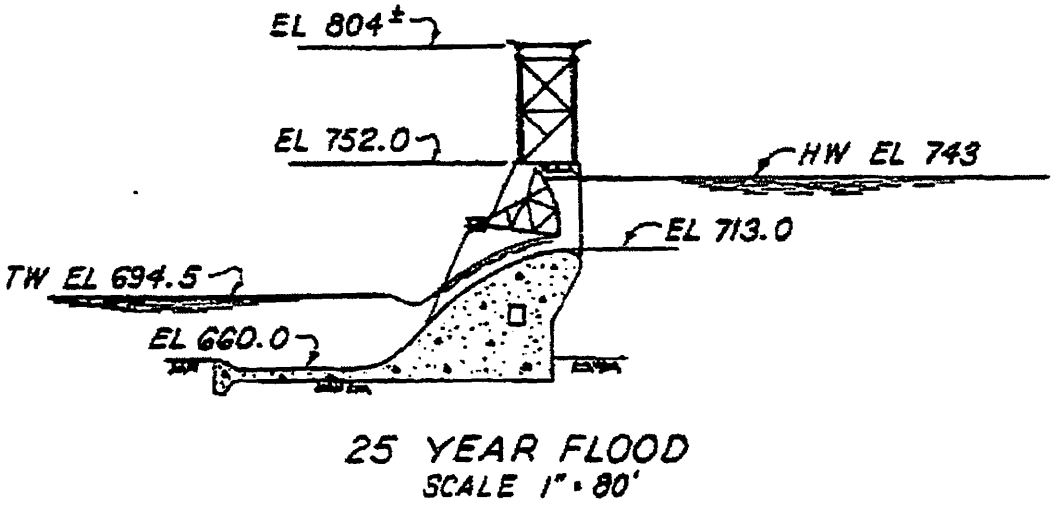

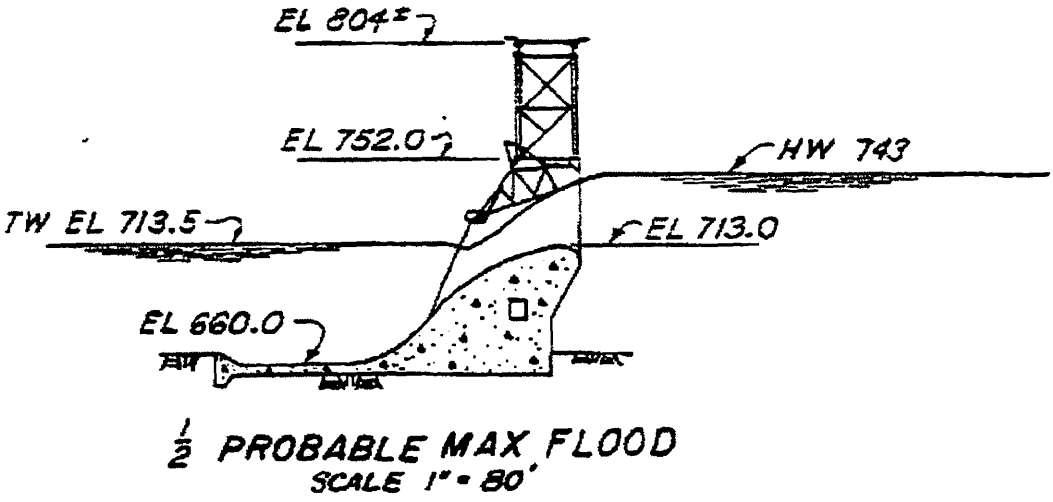

Figure 2.4.4-3 Spillway Gate Positions for 25-Year Flood - ½ Probable Maximum Flood

Revised by Amendment 17

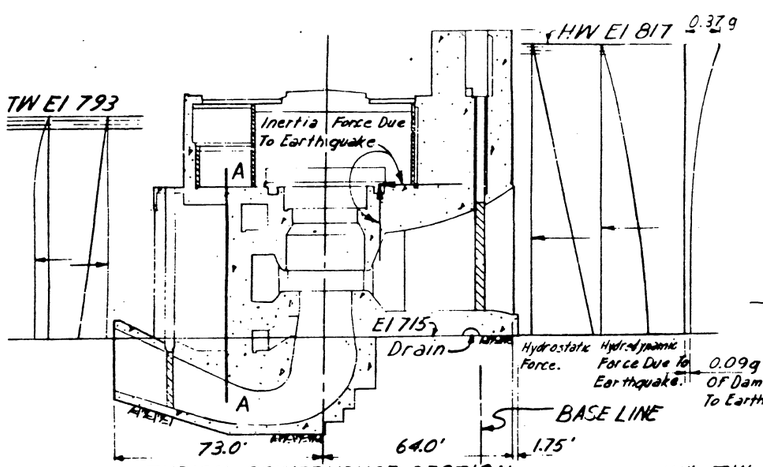

TYPICAL POWERHOUSE SECTION

UPLIFT DIAGRAM El 715
UPLIFT PRESSURE ASSUMED TO ACT ON 100 % OF BASE AREA

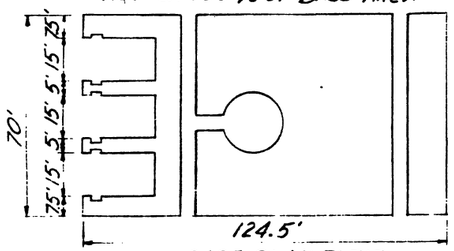

BASE PLAN El 715

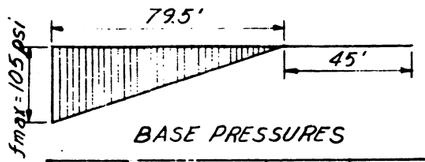

BASE PRESSURES

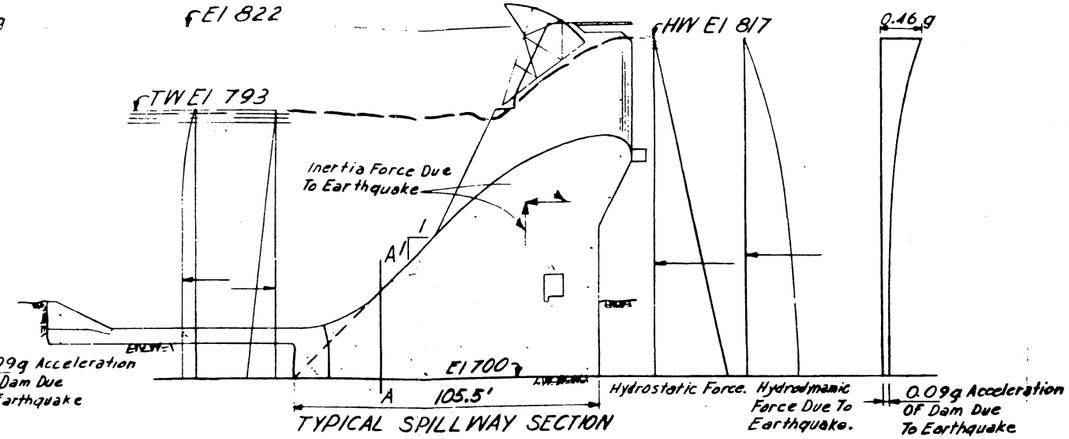

TYPICAL SPILLWAY SECTION

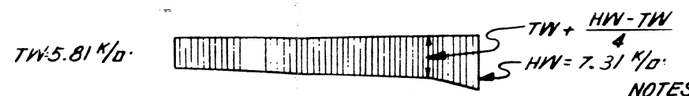

UPLIFT DIAGRAM El 700
UPLIFT PRESSURE ASSUMED TO ACT ON 100 % OF BASE AREA

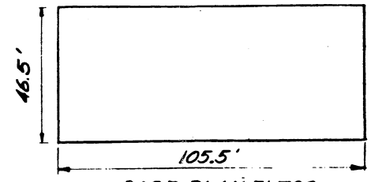

BASE PLAN El 700

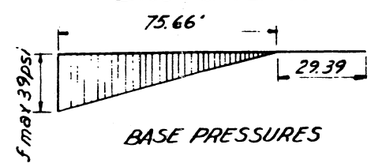

BASE PRESSURES

* Shear, s that is reqd for Q=1 is calculated from shear-friction formula, $Q = \frac{0.65\Sigma V + SA}{\Sigma H}$, A is assumed to be entire area.

** Shear stress, s, reqd for Q=1 considering portion of base in compression instead of entire base area.

NOTES:

1. Vertical acceleration of powerhouse and spillway at base assumed to be 0.06g. By dynamic analysis, amplification of acceleration above the base was determined to be 0.22g at top for the powerhouse section and 0.12g at the top for the spillway.
2. Horizontal acceleration of powerhouse and spillway at base assumed to be 0.09g. By dynamic analysis, amplification of acceleration above the base was determined to be 0.37g at the top for the powerhouse section and 0.46g at the top for the spillway.
3. Spillway gates assumed open for this analysis.

ΣV	ΣH	ΣH/ΣV	Avg shear	S reqd for Q=1	f max	F.S. = ΣMR/ΣMo	Vertical shear on plane A-A
22,762K	22,541K	0.99	24.2psi (entire base)	8.3psi * (14.6psi)**	105psi	1.18	26 psi

ΣV	ΣH	ΣH/ΣV	Avg shear	S reqd for Q=1	f max	F.S. = ΣMR/ΣMo	Vertical shear on plane A-A
19,488K	14,382K	0.75	20psi (entire base)	2.38psi * (3.30psi)**	39psi	1.26	17psi

Figure 2.4.4-4.
Powerhouse and Spillway
Fort Loudoun Dam
Results of Analysis
for 1/2 SSE

Best Available Historical Image

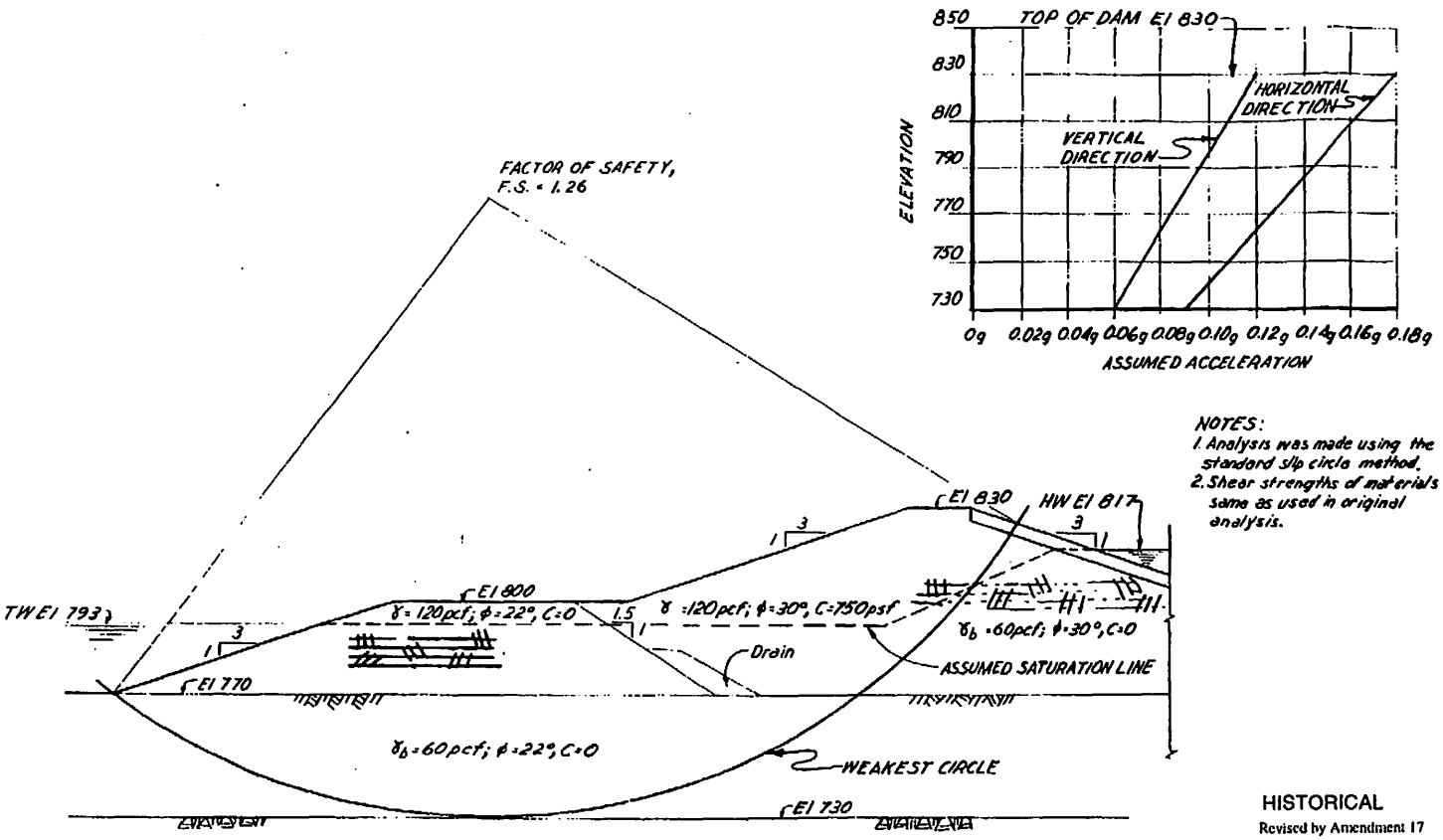

TYPICAL EMBANKMENT SECTION

NOTES:
1. Analysis was made using the standard slip circle method.
2. Shear strengths of materials same as used in original analysis.

HISTORICAL
Revised by Amendment 17

Figure 2.4.4-5
Embankment, Fort Loudoun Dam Results of Analysis for 1/2 SSE

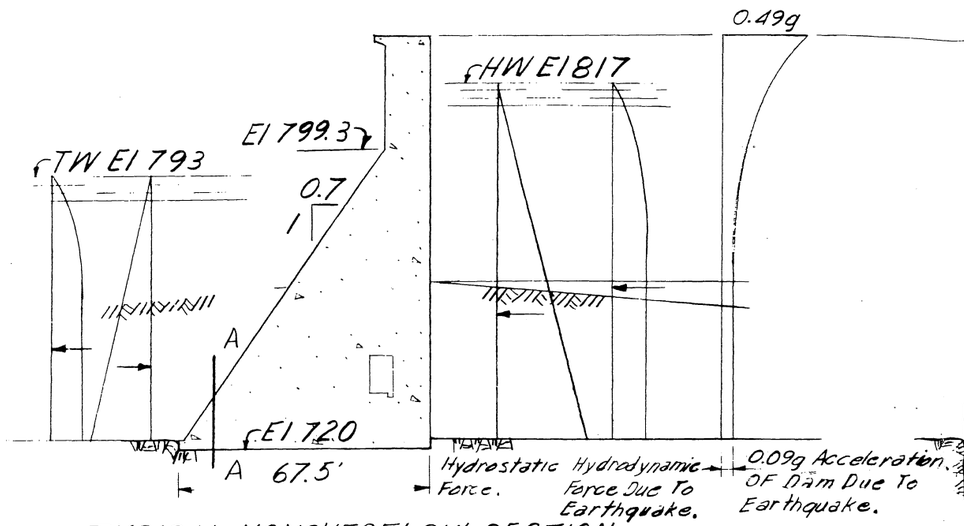

TYPICAL NONOVERFLOW SECTION

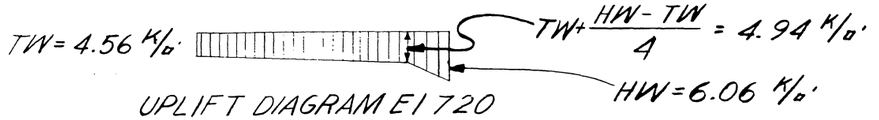

UPLIFT DIAGRAM El 720
UPLIFT PRESSURE ASSUMED TO ACT ON 100 % OF BASE AREA

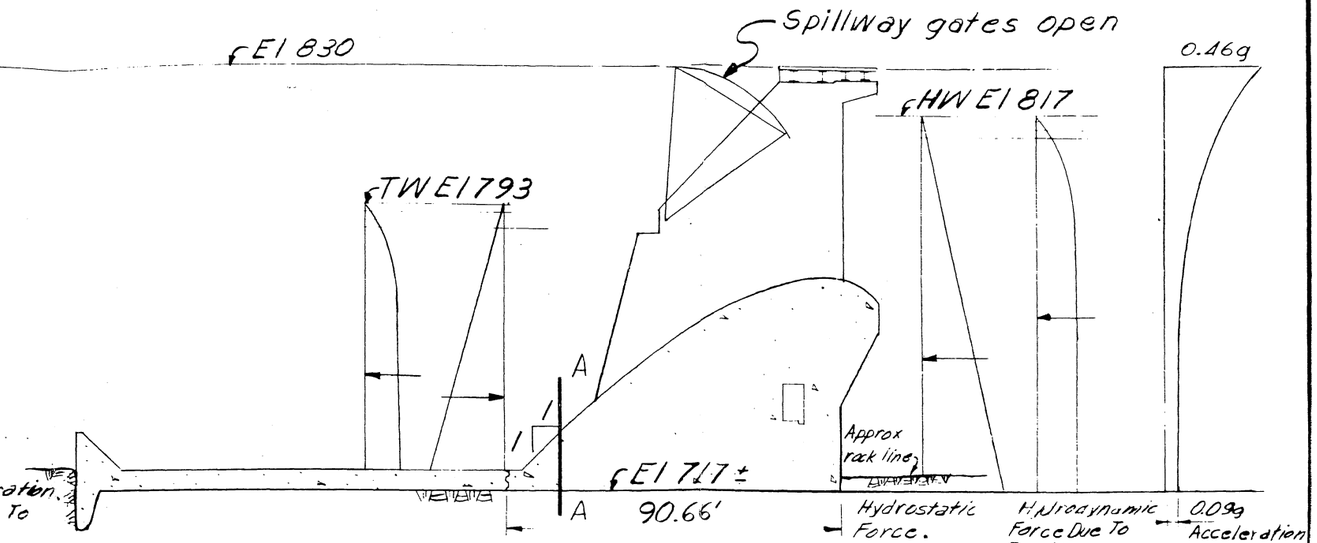

TYPICAL SPILLWAY SECTION

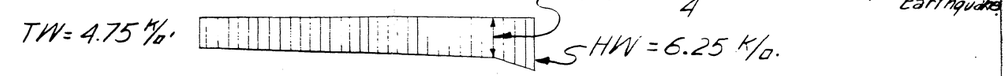

UPLIFT DIAGRAM El 717
UPLIFT PRESSURE ASSUMED TO ACT ON 100 % OF BASE AREA

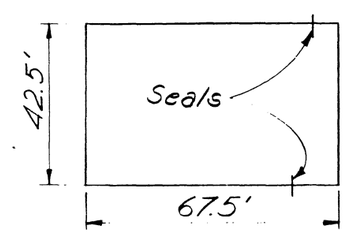

BASE PLAN AT El 720

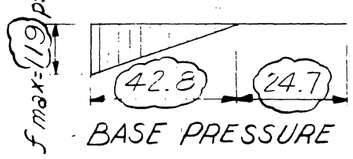

BASE PRESSURE

* Shears, that is reqd for Q=1 is calculated from shear-friction formula, $Q = \frac{0.65\Sigma V + SA}{\Sigma H}$, A is assumed to be entire area.

** Shear stress, s, reqd for Q=1 considering portion of base in compression instead of entire base area.

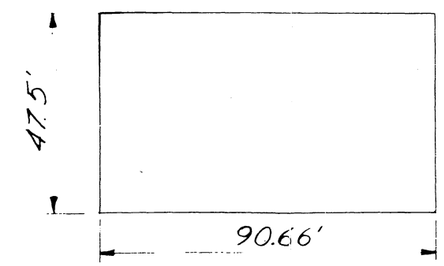

BASE PLAN AT El 717

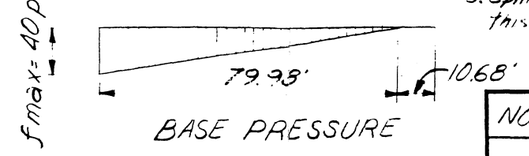

BASE PRESSURE

NOTES:

1. Vertical acceleration of nonoverflow and spillway at base assumed to be 0.06g. By dynamic analysis, amplification of acceleration above the base was determined to be 0.12g at top for the nonoverflow section and 0.17g at the top for the spillway.
2. Horizontal acceleration of nonoverflow and spillway at base assumed to be 0.09g. By dynamic analysis, amplification of acceleration above the base was determined to be 0.49g at the top for the nonoverflow section and 0.46g at the top for the spillway.
3. Spillway gates assumed open for this analysis.

Scale 1" = 40'

ΣV	ΣH	ΣH/ΣV	Avg Shear, S	S Reqd For Q=1	f max	F.S. = ΣMR/ΣMo	Vertical Shear on Plane A-A
13,602K	9715K	0.72	24psi	2.17psi* (3.96psi)**	119psi	1.14	70.5 psi

ΣV	ΣH	ΣH/ΣV	Avg Shear, S	S Reqd For Q=1	f max	F.S. = ΣMR/ΣMo	Vertical Shear on Plane A-A
11,094K	9,891K	0.89	16 psi	4.3psi* (4.9psi)**	40psi	1.16	40 psi

REV NO	DATE	MADE	CHKD	SUPV	INSP	SUBM	RECM
DSGN				SUPV			
DRWN JHES				INSP			
CHKD							
TRCD				ENGINEER			
COMP							

NONOVERFLOW & SPILLWAY

RESULTS OF ANALYSIS FOR OPERATING BASIS EARTHQUAKE

TELLICO DAM

FIGURE 2.4.4-6
Revised by Amendment 6.

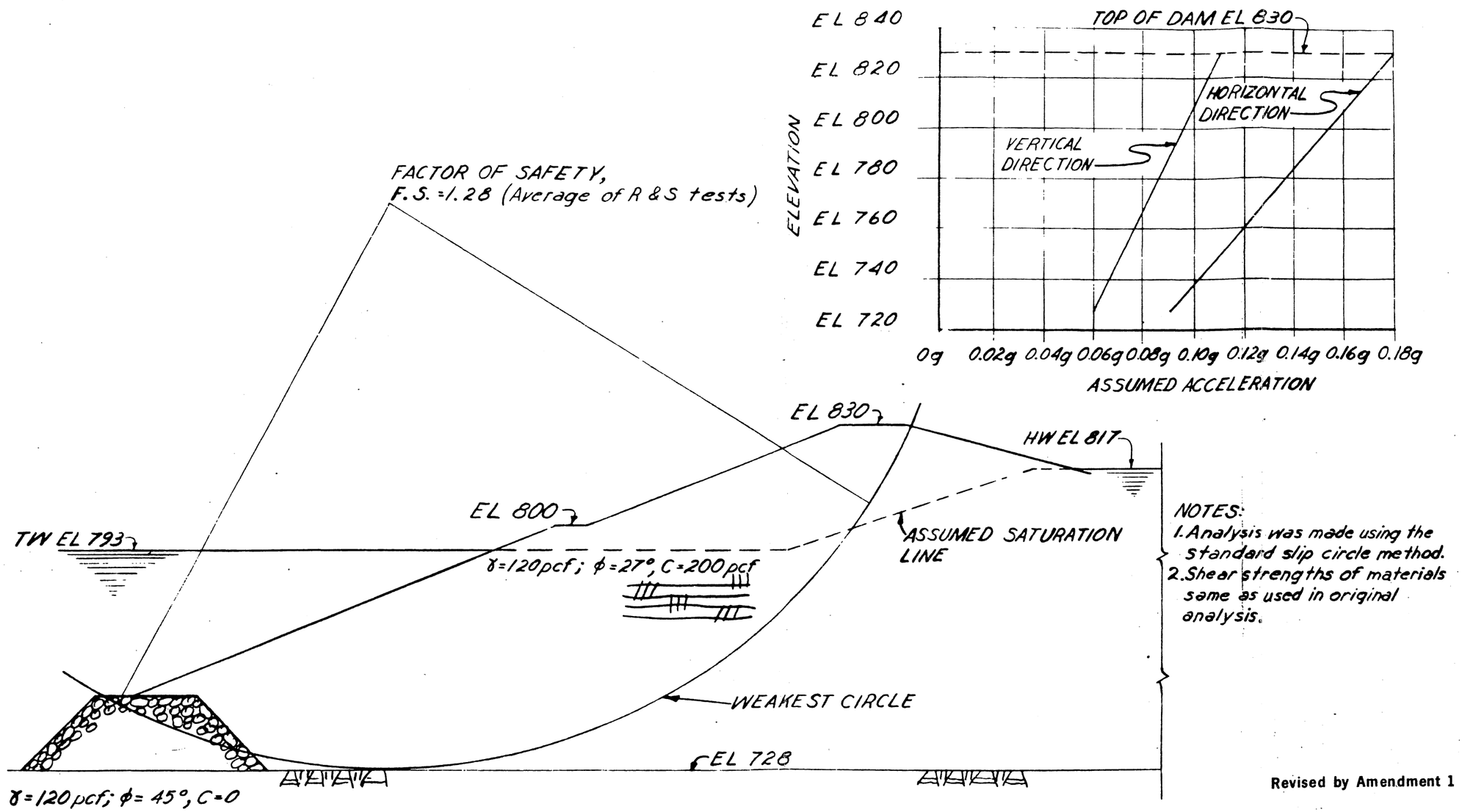

TYPICAL EMBANKMENT SECTION

Revised by Amendment 1

Figure 2.4.4-7
Embankment - Tellico Dam
Results of Analysis for
1/2 SSE

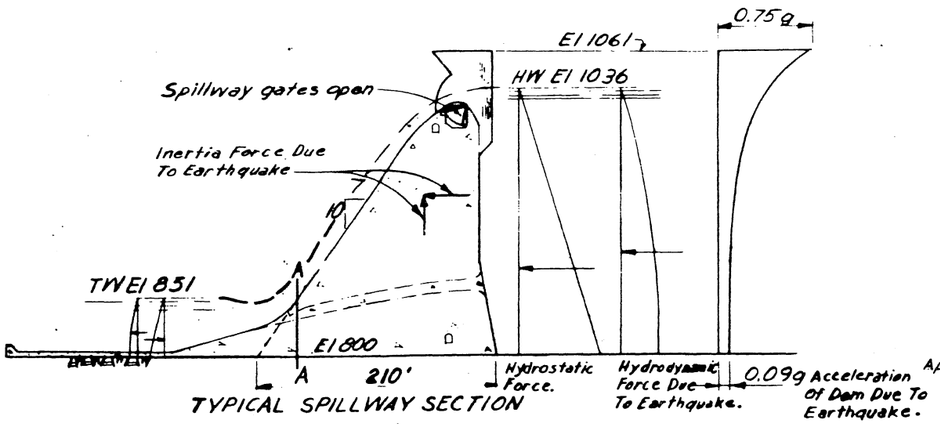

TYPICAL SPILLWAY SECTION

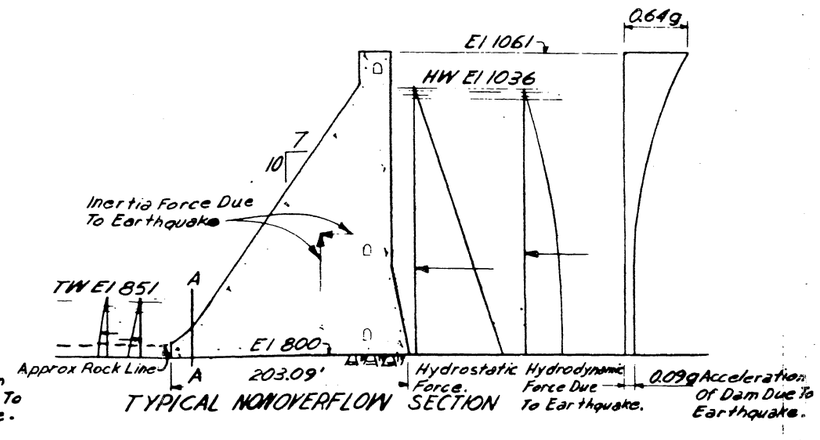

TYPICAL NONOVERFLOW SECTION

UPLIFT DIAGRAM El 800
UPLIFT PRESSURE ASSUMED
TO ACT ON 100 % OF BASE AREA

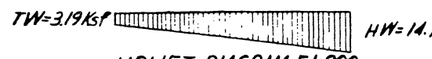

UPLIFT DIAGRAM El 800
UPLIFT PRESSURE ASSUMED
TO ACT ON 100 % OF BASE AREA

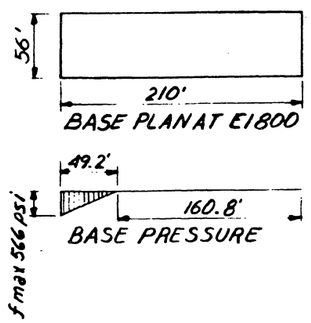

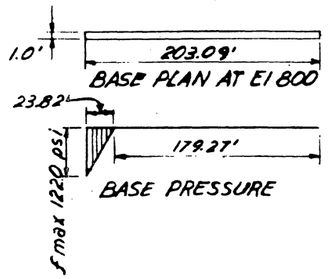

*Shears, that is reqd for Q=1 is calculated from shear-friction formula, $Q = \frac{0.65\Sigma V + SA}{\Sigma H}$, A is assumed to be entire area.

** Shears, reqd for Q=1 considering portion of base in compression (no tension), instead of entire base area.

NOTES:

1. Vertical acceleration of nonoverflow and spillway at base assumed to be 0.09g. By dynamic analysis, amplification of acceleration above the base was determined to be 0.14g at the top for the nonoverflow section and 0.14g at the top for the spillway.
2. Horizontal acceleration of nonoverflow and spillway at base assumed to be 0.09g. By dynamic analysis, amplification of acceleration above the base was determined to be 0.64g at the top for the nonoverflow section and 0.75g at the top for the spillway.
3. Spillway gates assumed open for this analysis.

ΣV	ΣH	ΣH/ΣV	Avg Shears	S Reqd For Q=1	f max	FS: ΣMR/ΣMo	Vertical Shear on plane A-A
112,616 K	143,587 K	1.28	85 psi (entire base)	42 psi* (177 psi)**	566 psi	1.25	247 psi

ΣV	ΣH	ΣH/ΣV	Avg Shears	S Reqd For Q=1	f max	FS: ΣMR/ΣMo	Vertical Shear on plane A-A
2101 K	2786 K	1.33	95 psi (entire base)	49 psi* (415 psi)**	1220 psi	1.03	535 psi

Figure 2.4.4-8
Spillway & Nonoverflow
Norris Dam, Results
of Analysis for
1/2 SSE

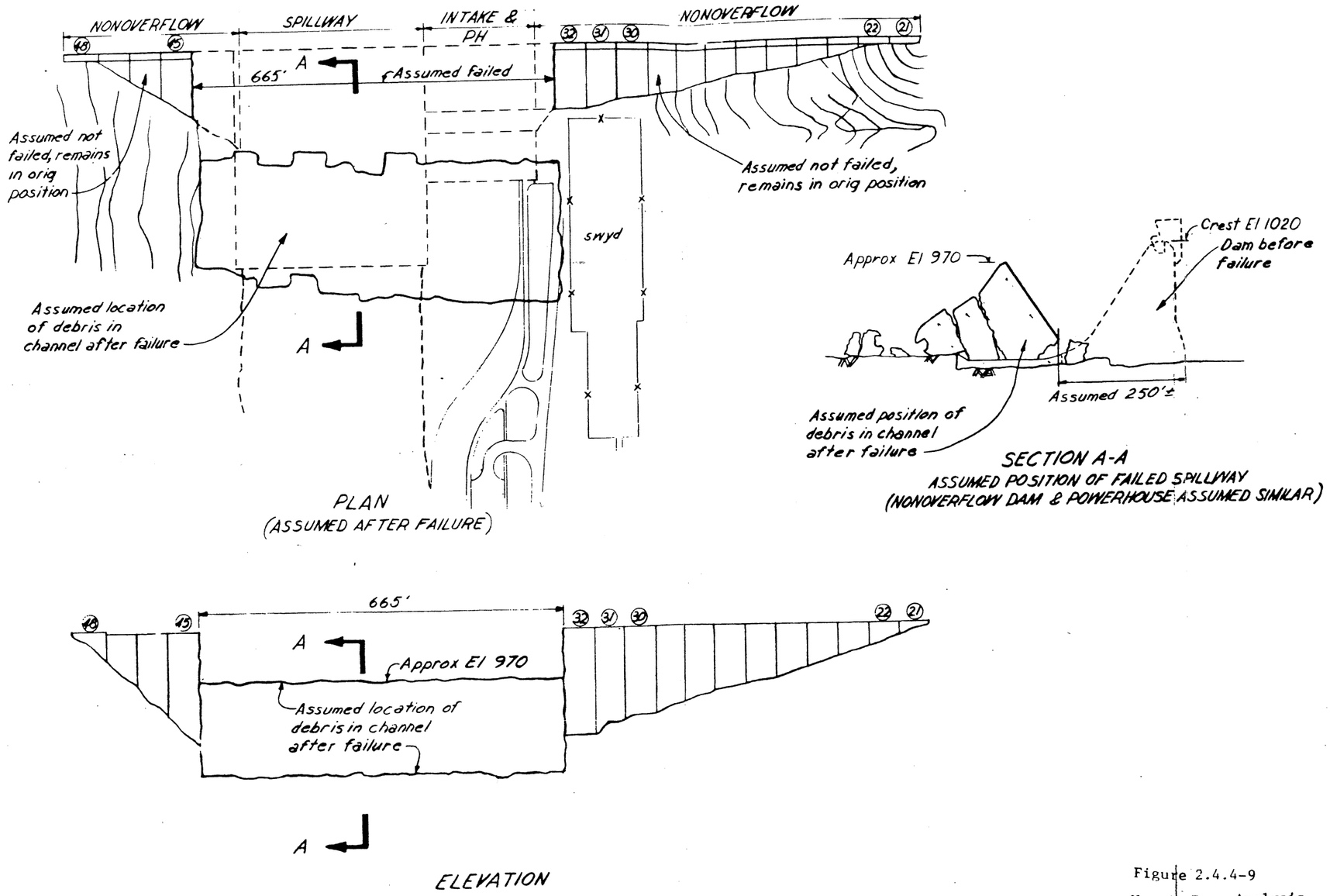

Figure 2.4.4-9

Norris Dam, Analysis for 1/2 SSE & One Half Maximum Possible Flood

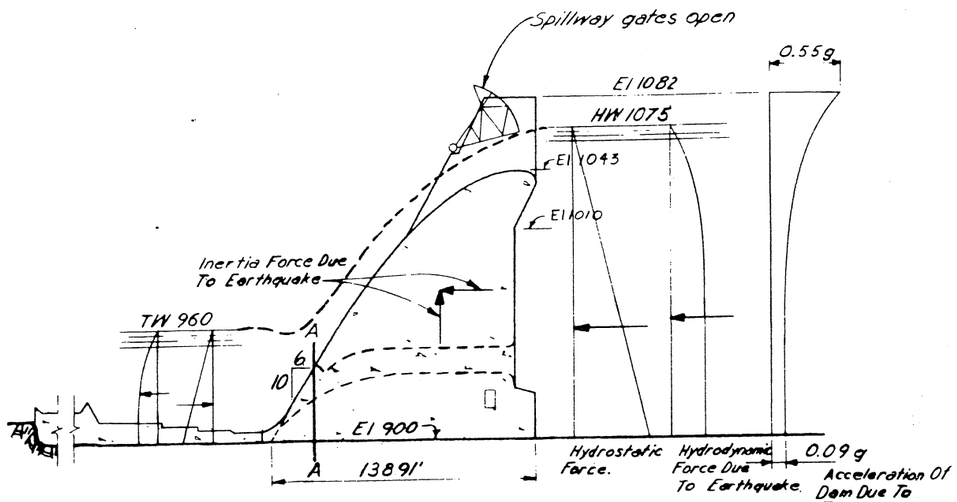

TYPICAL SPILLWAY SECTION

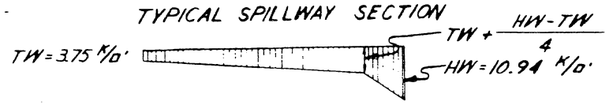

UPLIFT DIAGRAM El 900
UPLIFT PRESSURE ASSUMED TO ACT ON 100 % OF BASE AREA

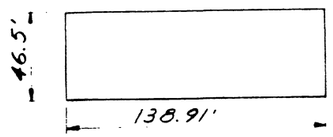

BASE PLAN AT El 900

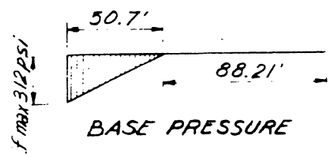

BASE PRESSURE

* Shear, s, that is reqd for Q=1 is calculated from shear-friction formula, $Q = \frac{0.65\Sigma V + SA}{\Sigma H}$, A is assumed to be entire area.

** Shear stress, s, reqd for Q=1 considering portion of base in compression instead of entire base area.

ΣV	ΣH	ΣH/ΣV	Avg Shear, S	S Reqd For Q=1	f max	F.S. ΣMR/ΣMo	Vertical Shear on Plane A-A
53,007K	57,276K	1.08	61 psi (entire base)	25 psi * (67 psi) **	312 psi	1.13	173 psi

NOTES:

1. Vertical acceleration of the spillway at the base assumed to be 0.06g. By dynamic analysis, amplification of acceleration above the base was determined to be 0.11g at the top.
2. Horizontal acceleration of the spillway at the base assumed to be 0.09g. By dynamic analysis, amplification of acceleration above the base was determined to be 0.55g at the top.
3. Spillway gates assumed open for this analysis.

Figure 2 4.4-10
Spillway & Nonoverflow
Cherokee Dam
Results of Analysis
for 1/2 SSE

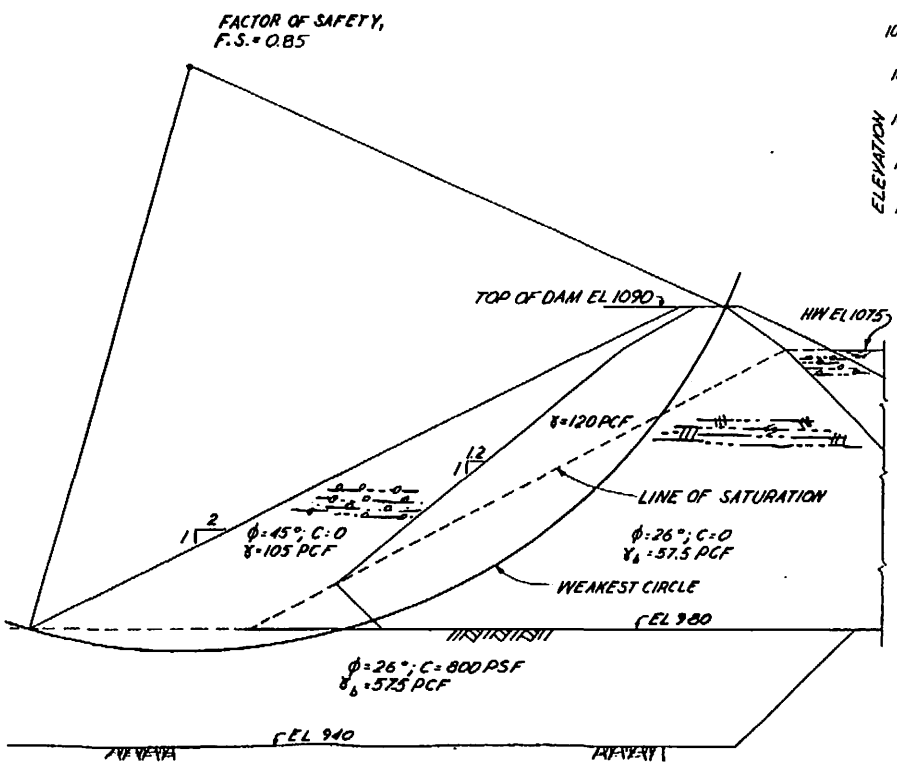

TYPICAL EMBANKMENT SECTION

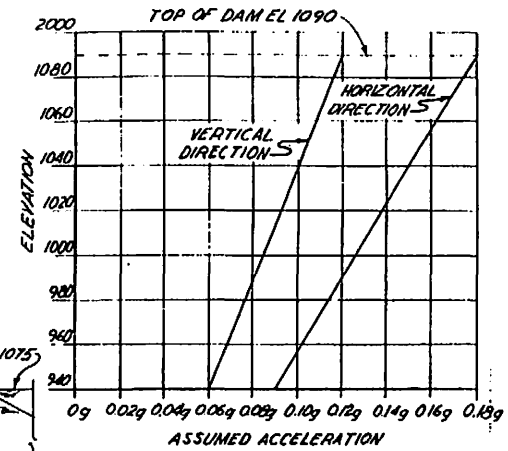

NOTES:
1. Analysis was made using the standard slip circle method.
2. Shear strengths of materials same as used in original analysis.

HISTORICAL

Revised by Amendment 17

Figure 2.4.4-11
Embankment, Cherokee Dam, Results of Analysis for 1/2 SSE

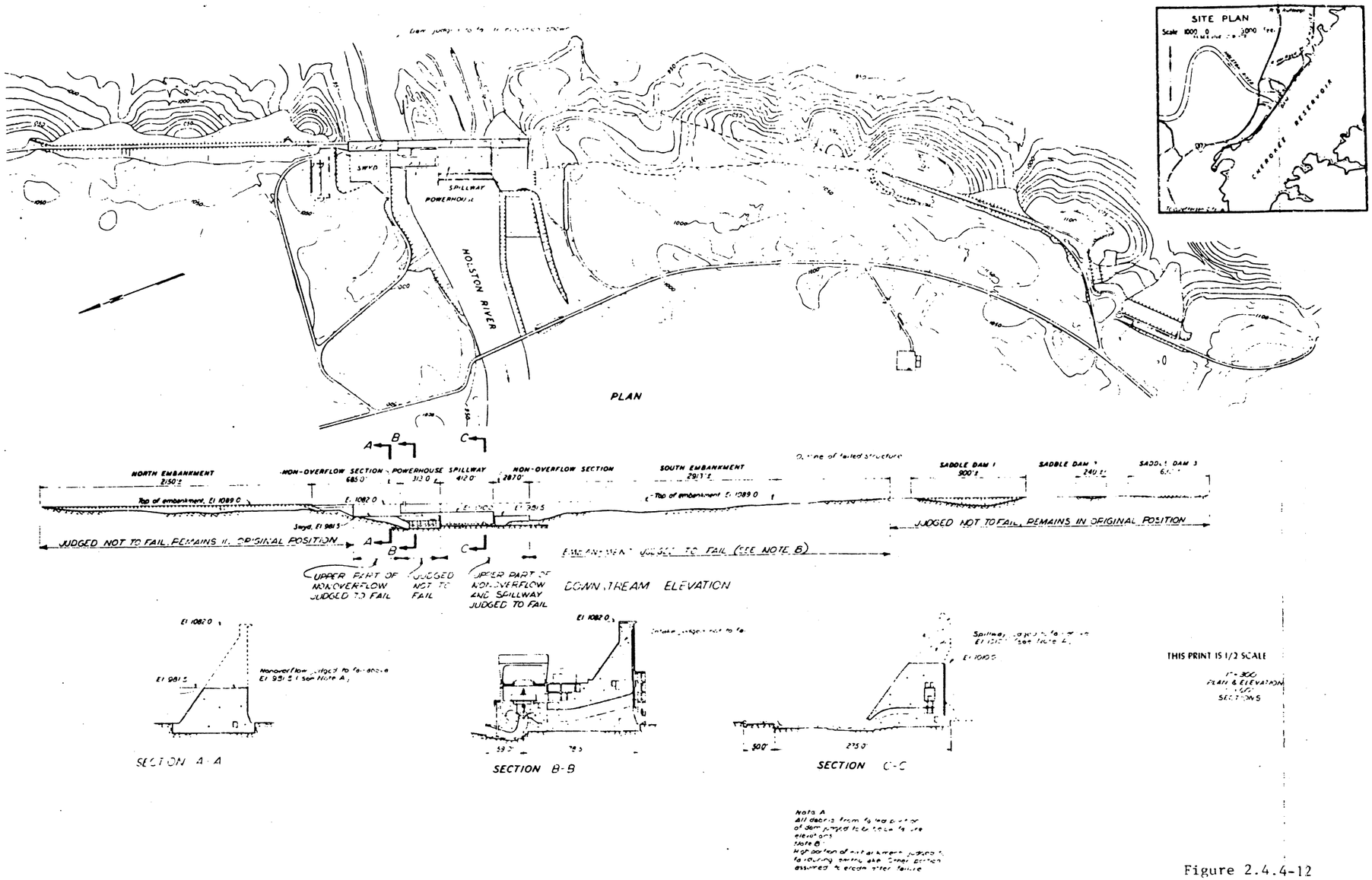

Figure 2.4.4-12

Cherokee Dam, Assumed Condition of Dam After Failure, 1/2 SSE and 1/2 Maximum Possible Flood

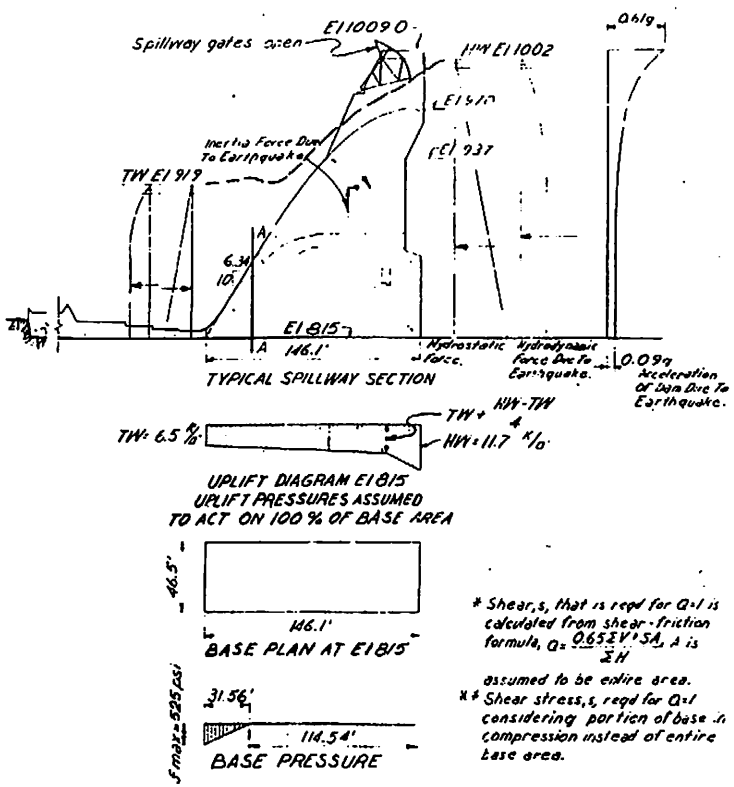

ΣV	ΣH	ΣH/ΣV	Avg Shear, S	S Reqd For Q=1	S max	FS = ΣMR/ΣMO	Vertical Shear on Plane AA
55,483K	60,245K	1.09	61.6psi (entire base)	25psi* (170psi)**	525psi	1.06	156psi

* Shear, s, that is reqd for Q=1 is calculated from shear-friction formula, $Q = \frac{0.65 \Sigma V + SA}{\Sigma H}$, A is assumed to be entire area.

** Shear stress, s, reqd for Q=1 considering portion of base in compression instead of entire base area.

NOTES:

1. Vertical acceleration of the spillway at the base assumed to be 0.06 g. By dynamic analysis, amplification of acceleration above the base was determined to be 0.13 g at the top.
2. Horizontal acceleration of the spillway at the base assumed to be 0.09g. By dynamic analysis, amplification of acceleration above the base was determined to be 0.61 g at the top.
3. Spillway gates assumed open for this analysis.

HISTORICAL

Revised by Amendment 17

FIGURE 2.4.4-13
Spillway and Overflow
Douglas Dam
Results of Analysis
for ½ SSE

Best Available Historical Image

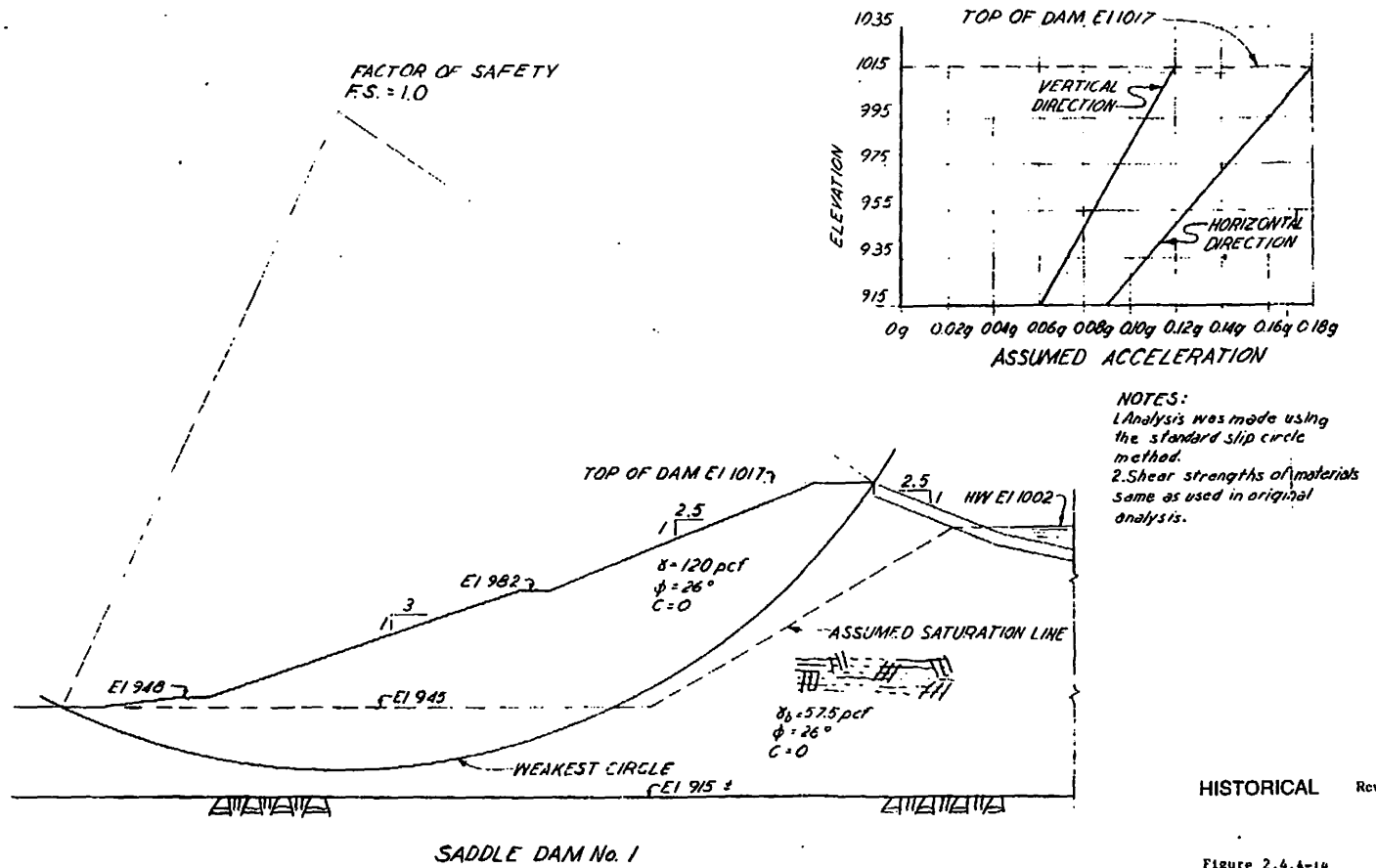

NOTES:
1. Analysis was made using the standard slip circle method.
2. Shear strengths of materials same as used in original analysis.

SADDLE DAM No. 1

HISTORICAL Revised by Amendment 17

Figure 2.4.4-14
Saddle Dam No. 1
Douglas Dam
Results of Analysis
for 1/2 SSE

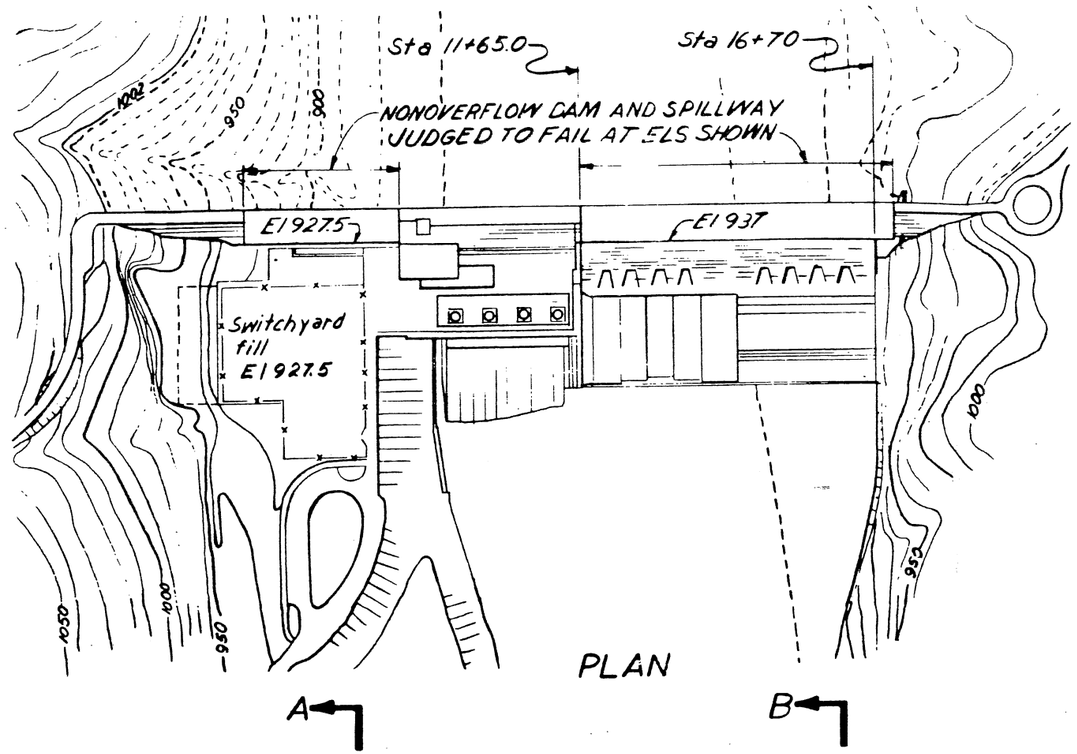

PLAN

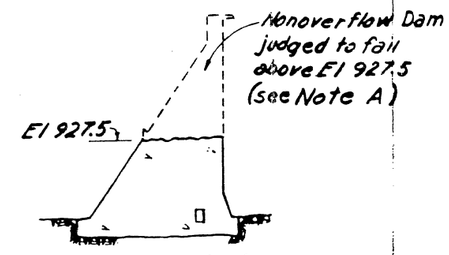

SECTION A-A

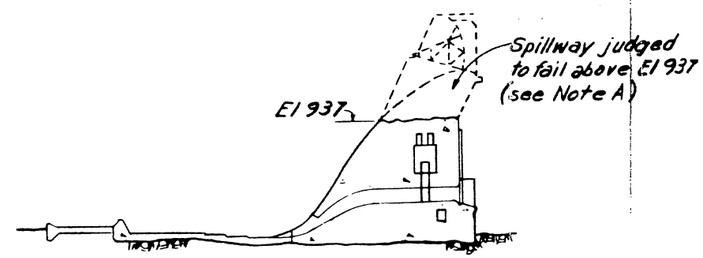

B-B

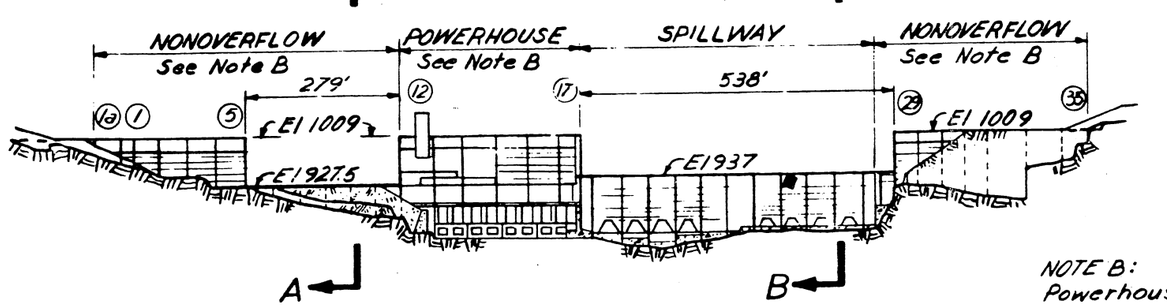

DOWNSTREAM ELEVATION

NOTE A:
All debris from failed portion of dam judged to be below failure elevations.

NOTE B:
Powerhouse intake blocks 12-17 and Nonoverflow Dam blocks 1a-5 and 29-35 judged to remain in original position.

Figure 2.4.4-15
Douglas Dam, Assumed Condition of Dam After Failure, 1/2 SSE and 1/2 Maximum Possible Flood

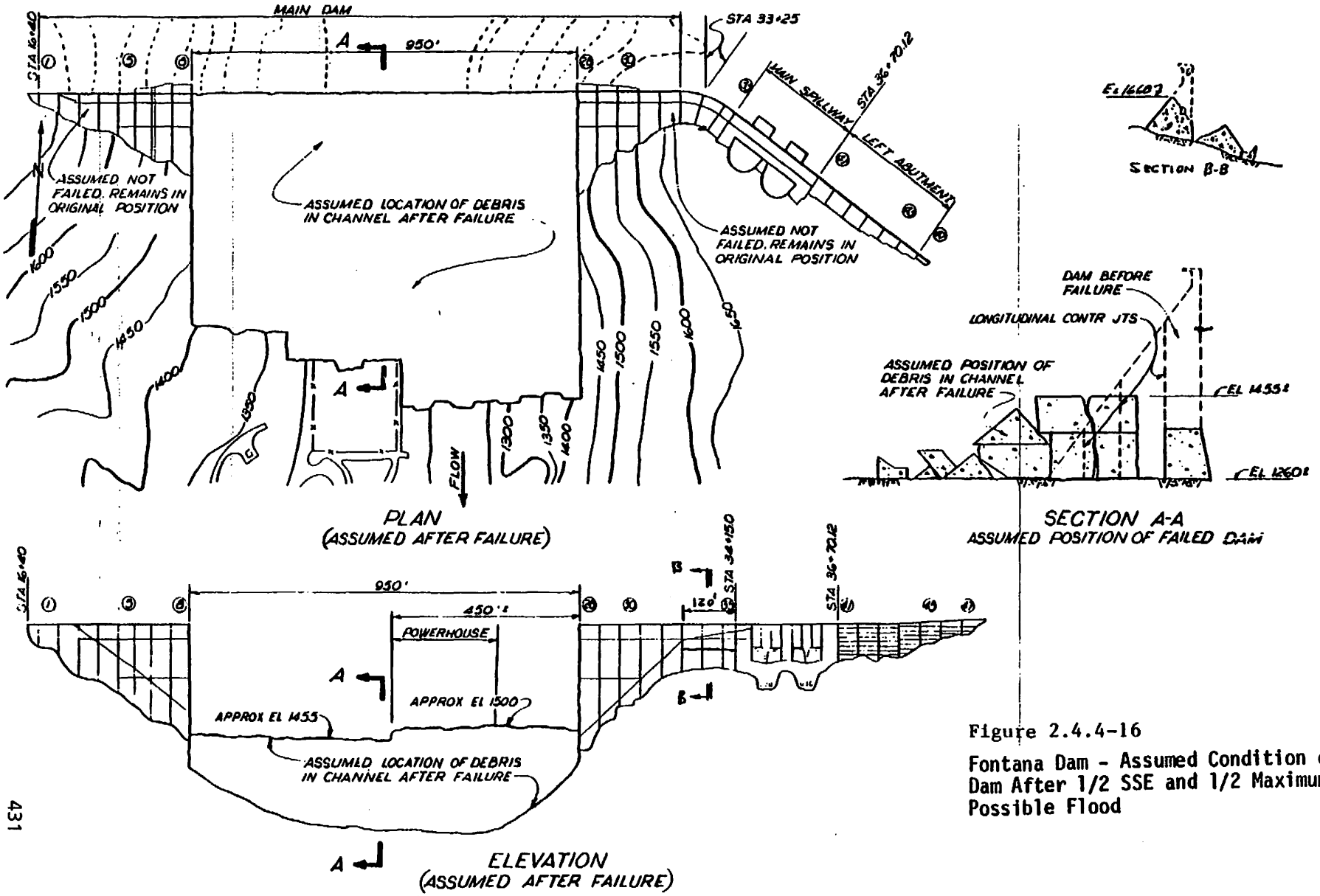

Figure 2.4.4-16

Fontana Dam - Assumed Condition of Dam After 1/2 SSE and 1/2 Maximum Possible Flood

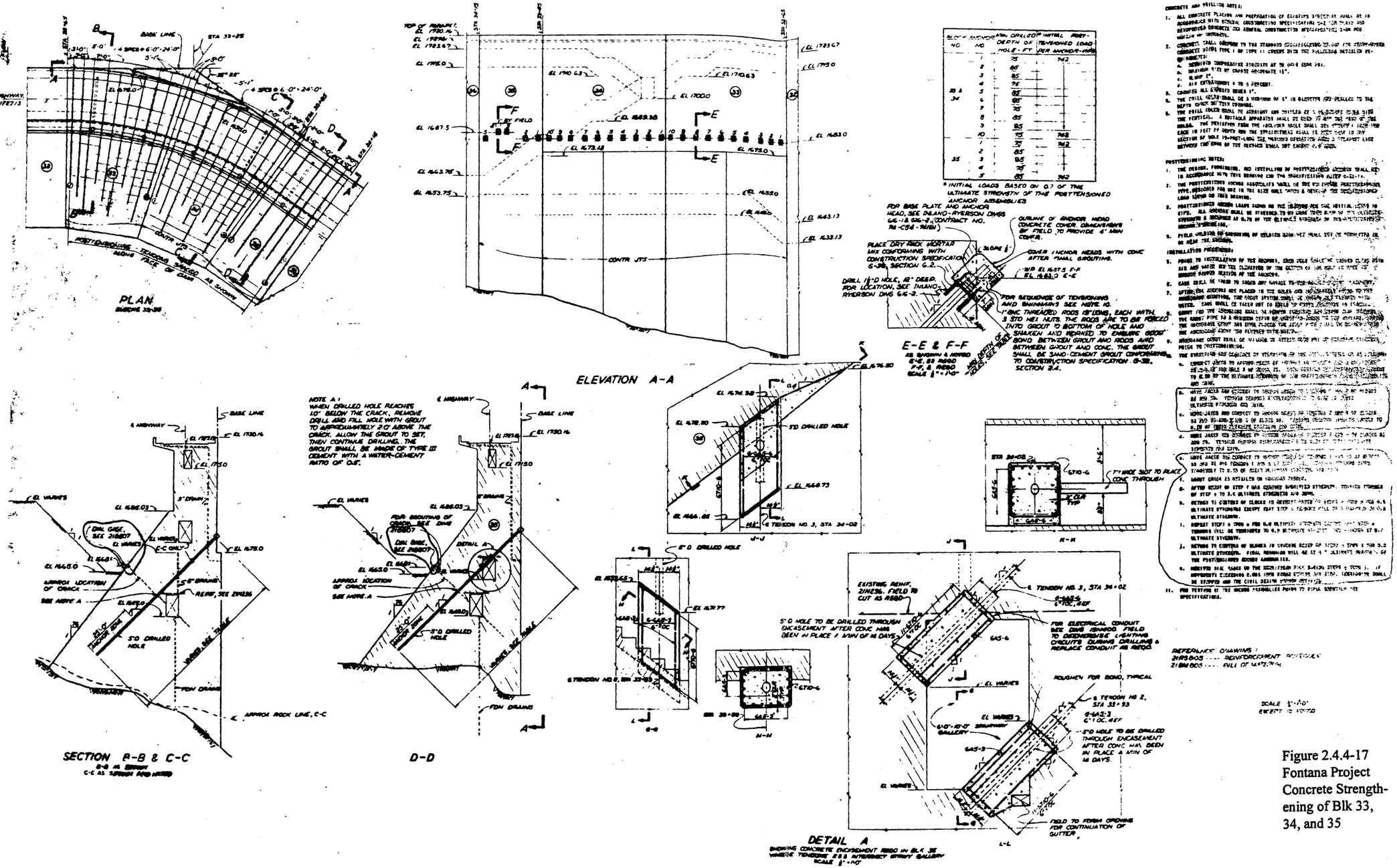

Figure 2.4.4-17
Fontana Project
Concrete Strengthening of Blk 33, 34, and 35

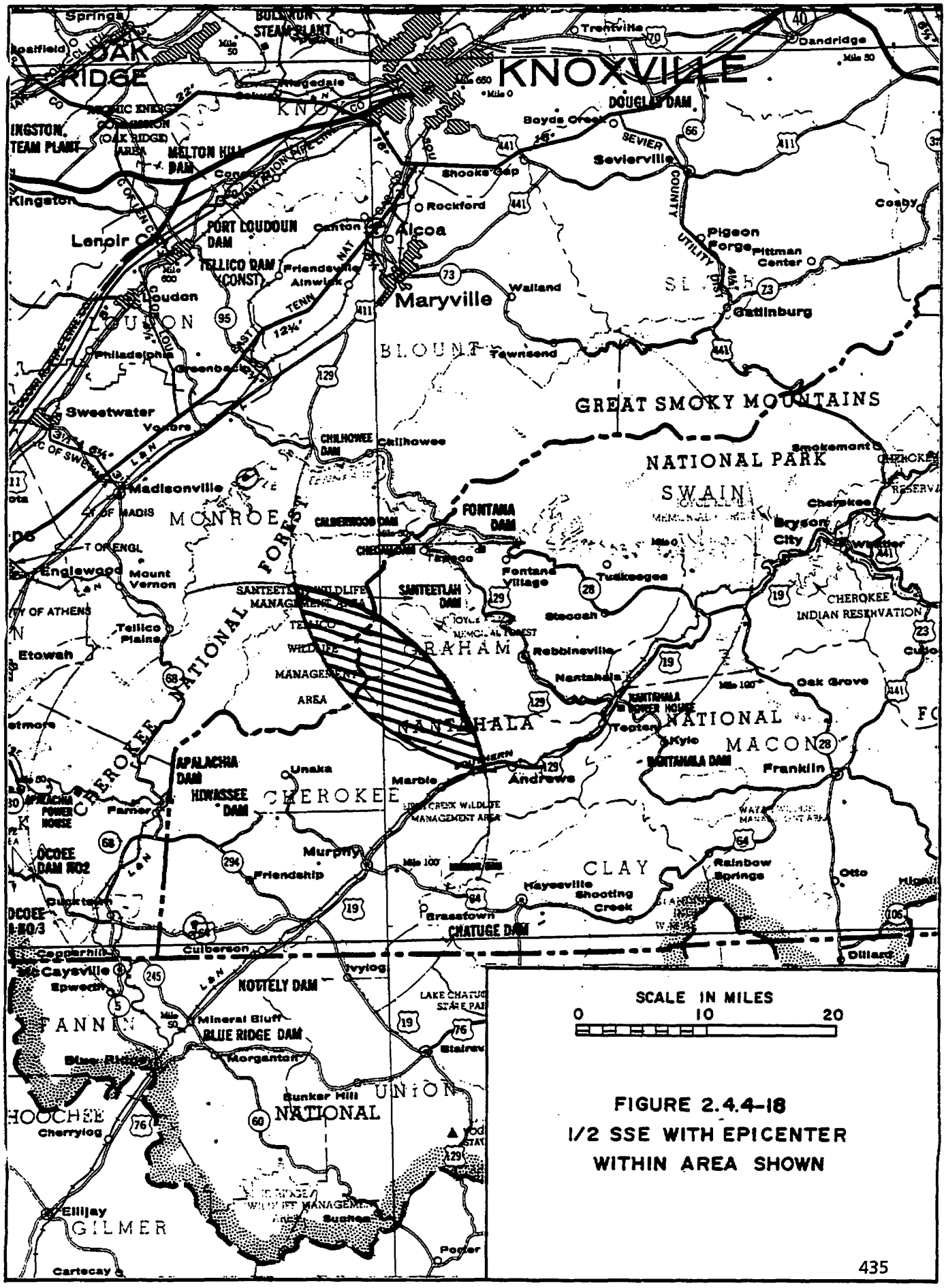

FIGURE 2.4.4-18
1/2 SSE WITH EPICENTER
WITHIN AREA SHOWN

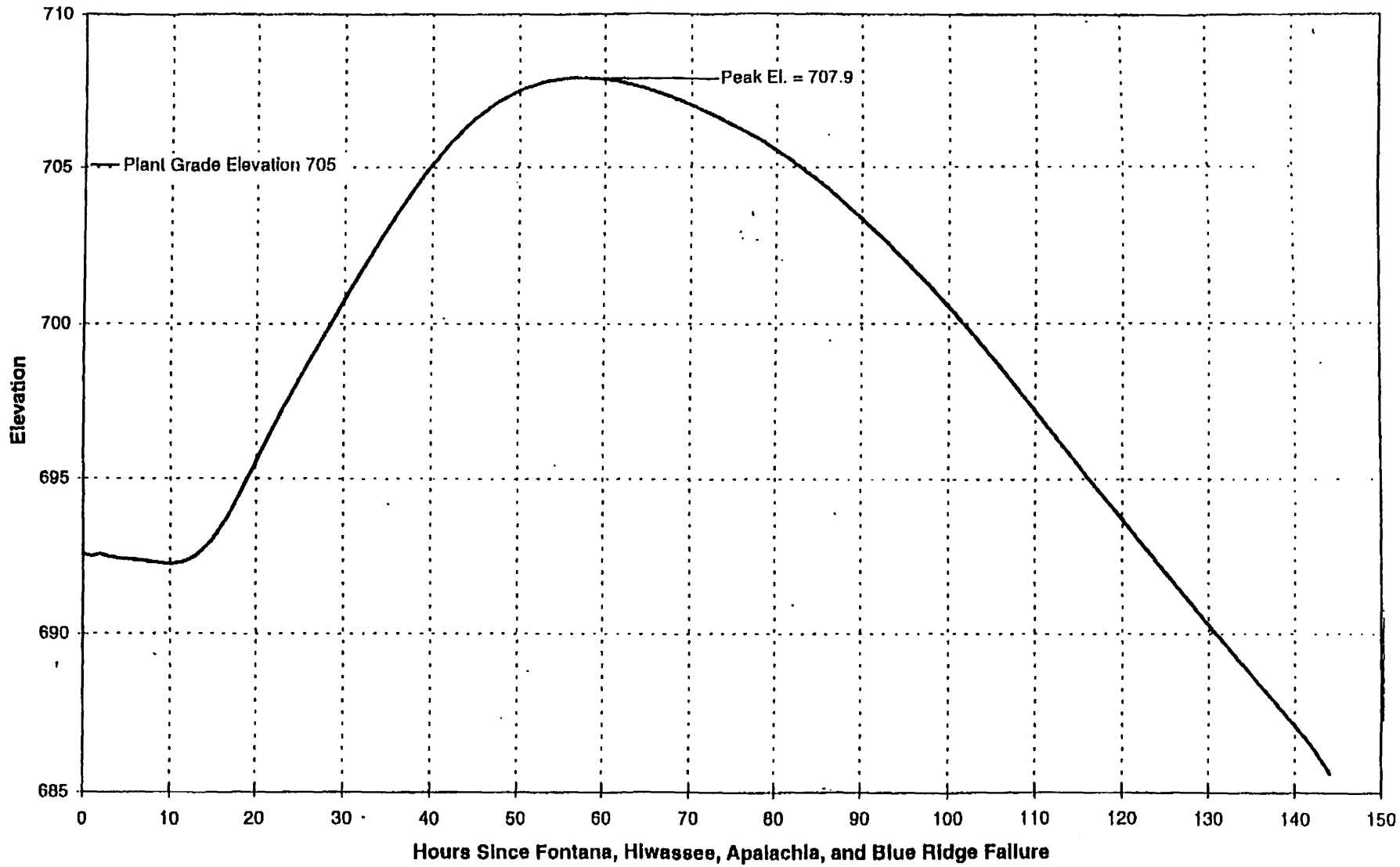

Seismic Flood Analysis - Fontana, Hiwassee, Apalachia and Blue Ridge
OBE Failure in 1/2 PMF - Sequoyah Plant

Figure 2.4.4-21

Revised by Amendment 17

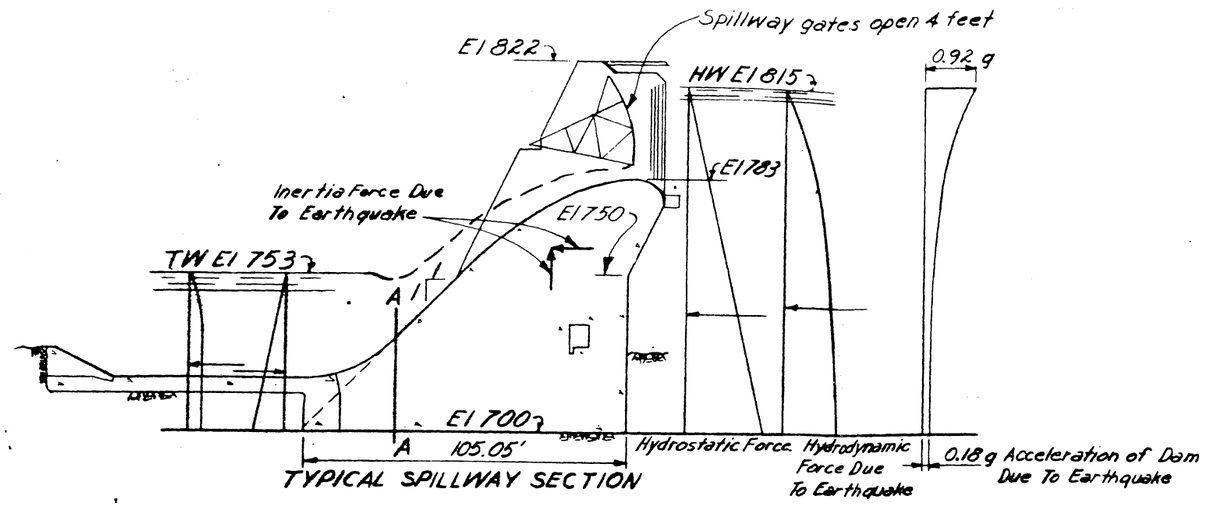

TYPICAL SPILLWAY SECTION

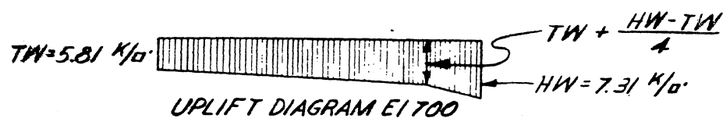

UPLIFT DIAGRAM El 700
UPLIFT PRESSURE ASSUMED TO ACT ON 100% OF BASE AREA

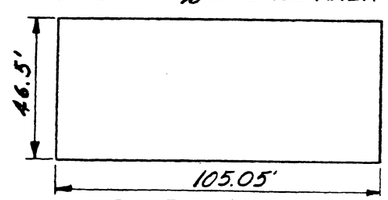

BASE PLAN El 700

NOTES:

1. Vertical acceleration of spillway at base assumed to be 0.12g. By dynamic analysis, amplification of acceleration above the base was determined to be 0.24g at top.
2. Horizontal acceleration of spillway at base assumed to be 0.18g. By dynamic analysis, amplification of acceleration above the base was determined to be 0.92g at top.
3. Spillway gates assumed open 4 feet for this analysis.

* Shear, s, that is reqd for Q=1 is calculated from shear-friction formula, $\frac{0.65\,\Sigma V + SA}{\Sigma H}$, A is assumed to be entire area.

** For base at El 700 resultant falls outside base under SSE

BASE PRESSURE**

ΣV	ΣH	$\frac{\Sigma H}{\Sigma V}$	Avg shear	S reqd for Q=1	f max	$F.S. \frac{\Sigma M_R}{\Sigma M_O}$
18,254 K	29,534 K	1.62	42 psi (entire base)	25 psi *	* *	0.9

Figure 2.4.4-24

Spillway, Fort Loudoun Dam, Results of Analysis for SSE

Best Available Historical Image

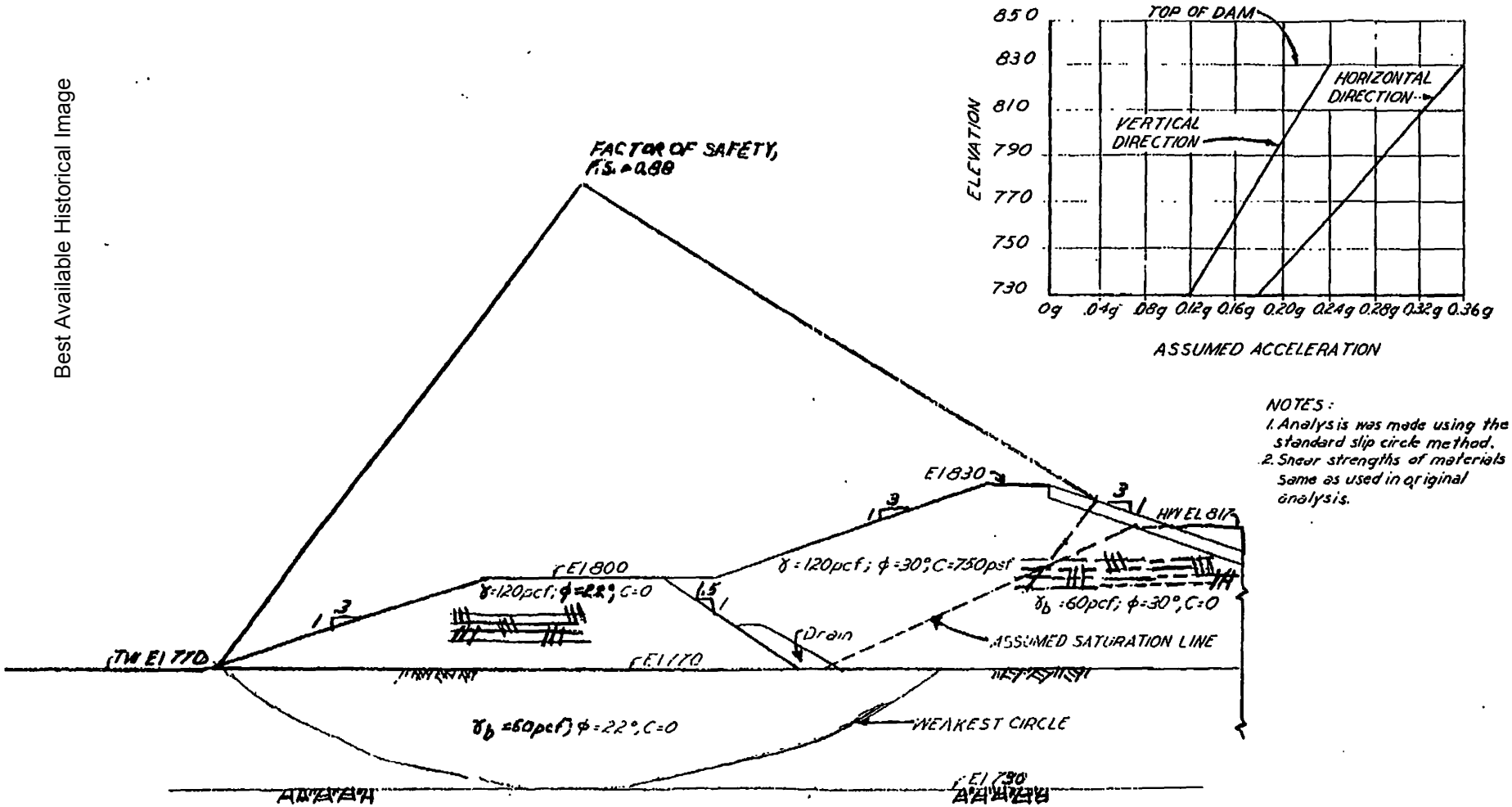

TYPICAL EMBANKMENT SECTION

HISTORICAL

Revised by Amendment 17

Figure 2.4.4-25
Embankment, Fort Loudoun Dam, Results of Analysis For SSE

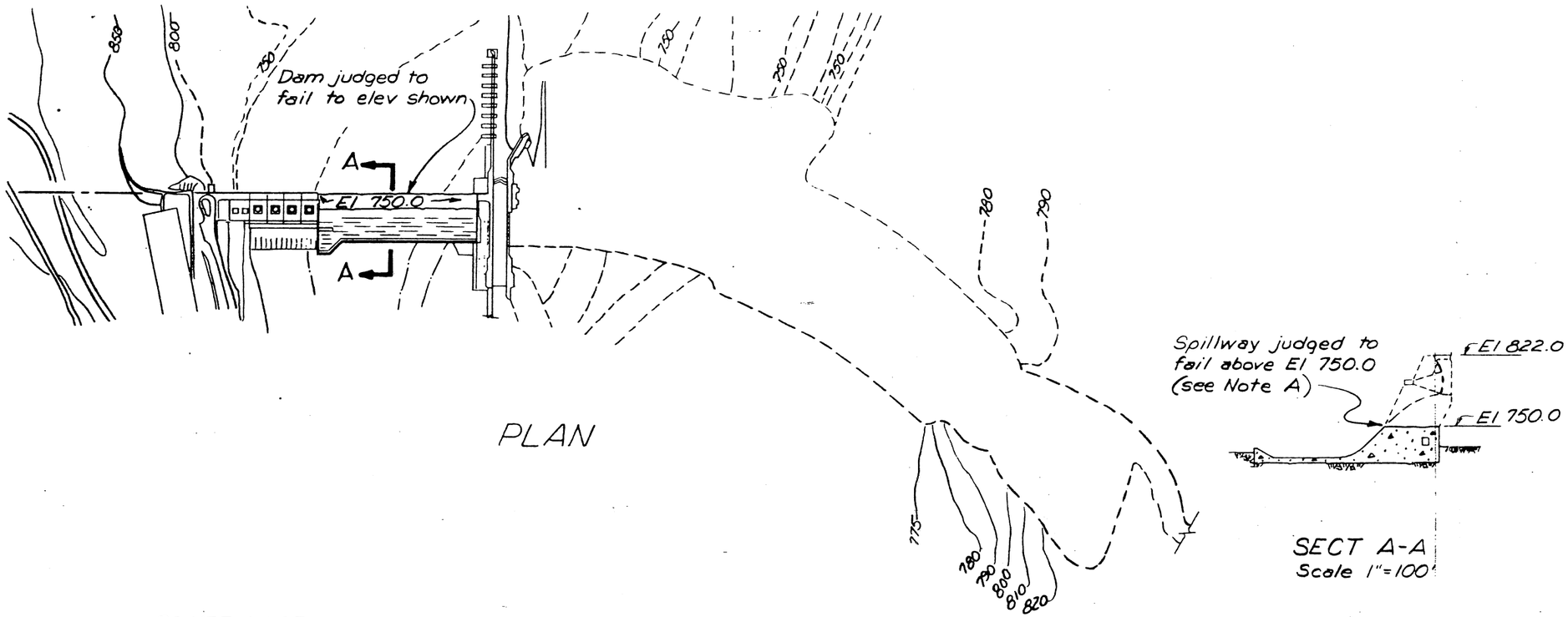

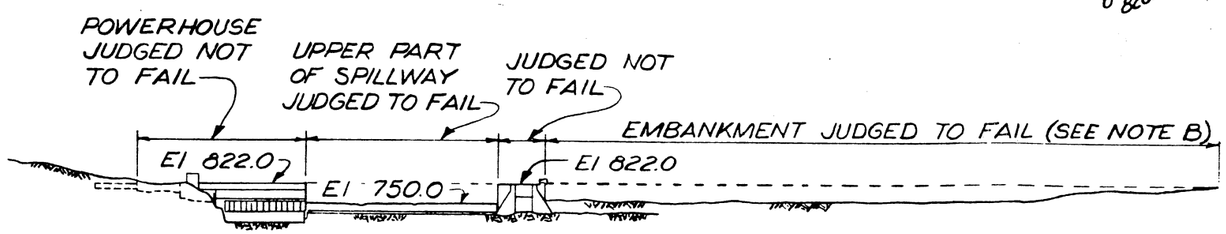

Note A :
All debris from failed portion of dam judged to be below failure elevation

Note B :
High portion of embankment judged to fail during earthquake. Other portion assumed to erode after failure.

Figure 2.4.4-26
Fort Loudoun Dam
Assumed Condition of Dam After Failure, SSE Combined with 25 Year Flood

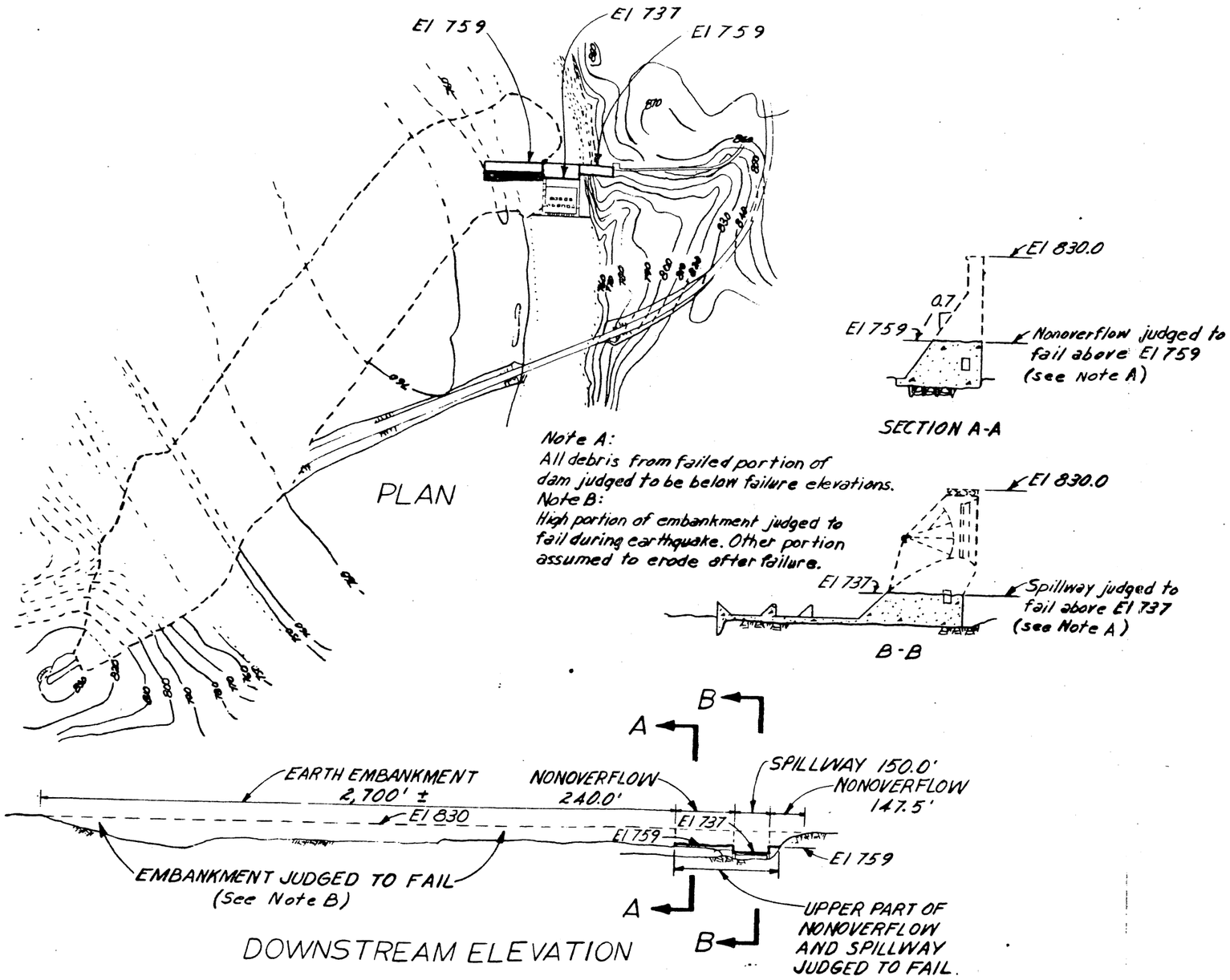

Figure 2.4.4-27
Tellico Dam, Tellico
Project Assumed Condition
of Dam After Failure -
SSE Combined with
25 Year Flood

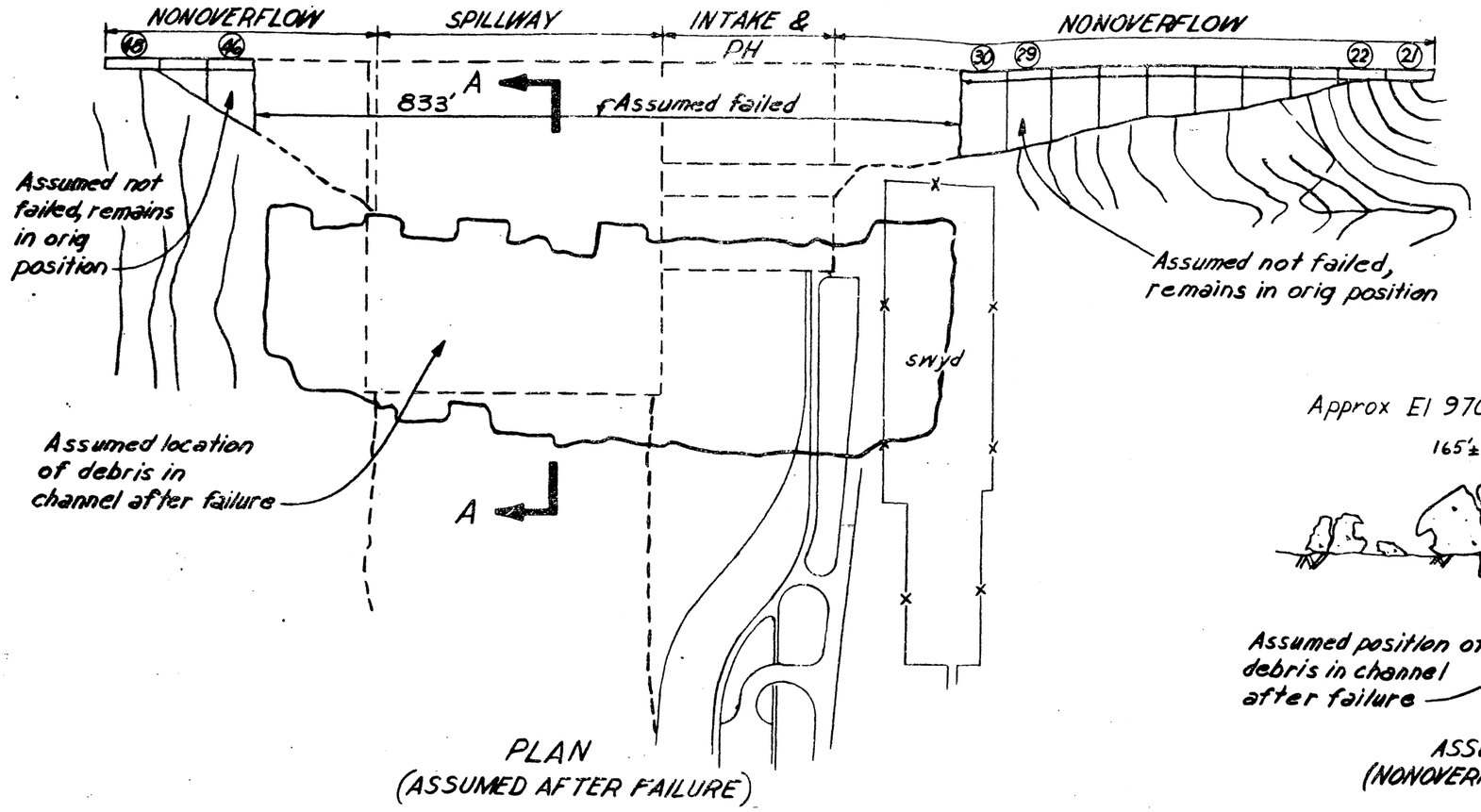

PLAN
(ASSUMED AFTER FAILURE)

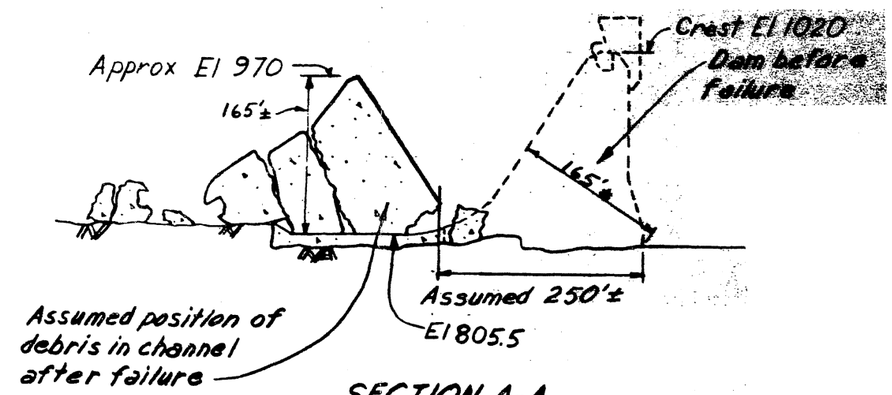

SECTION A-A
ASSUMED POSITION OF FAILED SPILLWAY
(NONOVERFLOW DAM & POWERHOUSE ASSUMED SIMILAR)

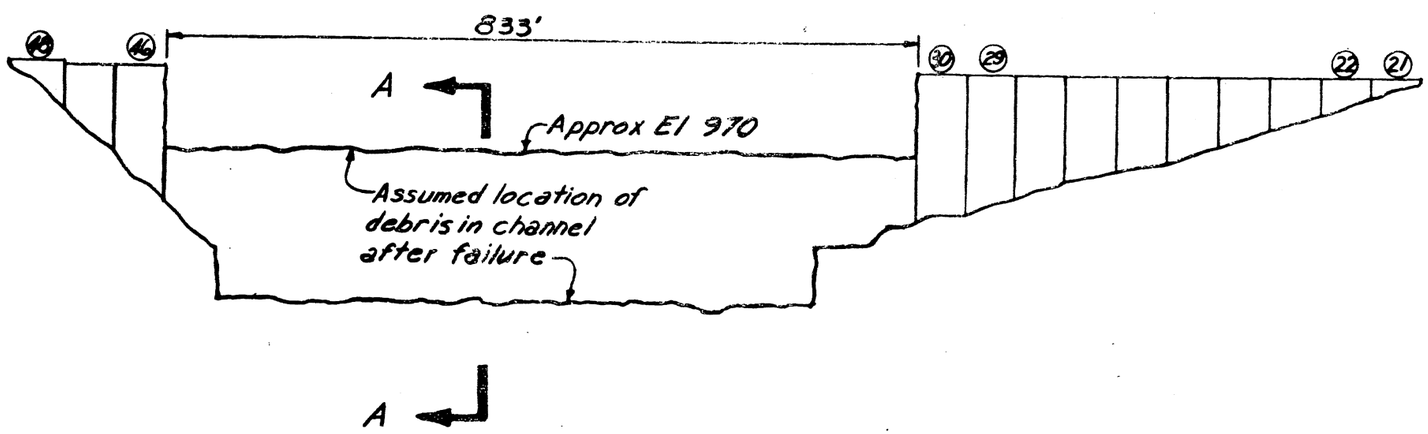

ELEVATION

scale 1" = 160'

Figure 2.4.4-28
SSE + 25 Year Flood Judged Condition of Dam After Failure, Norris Dam

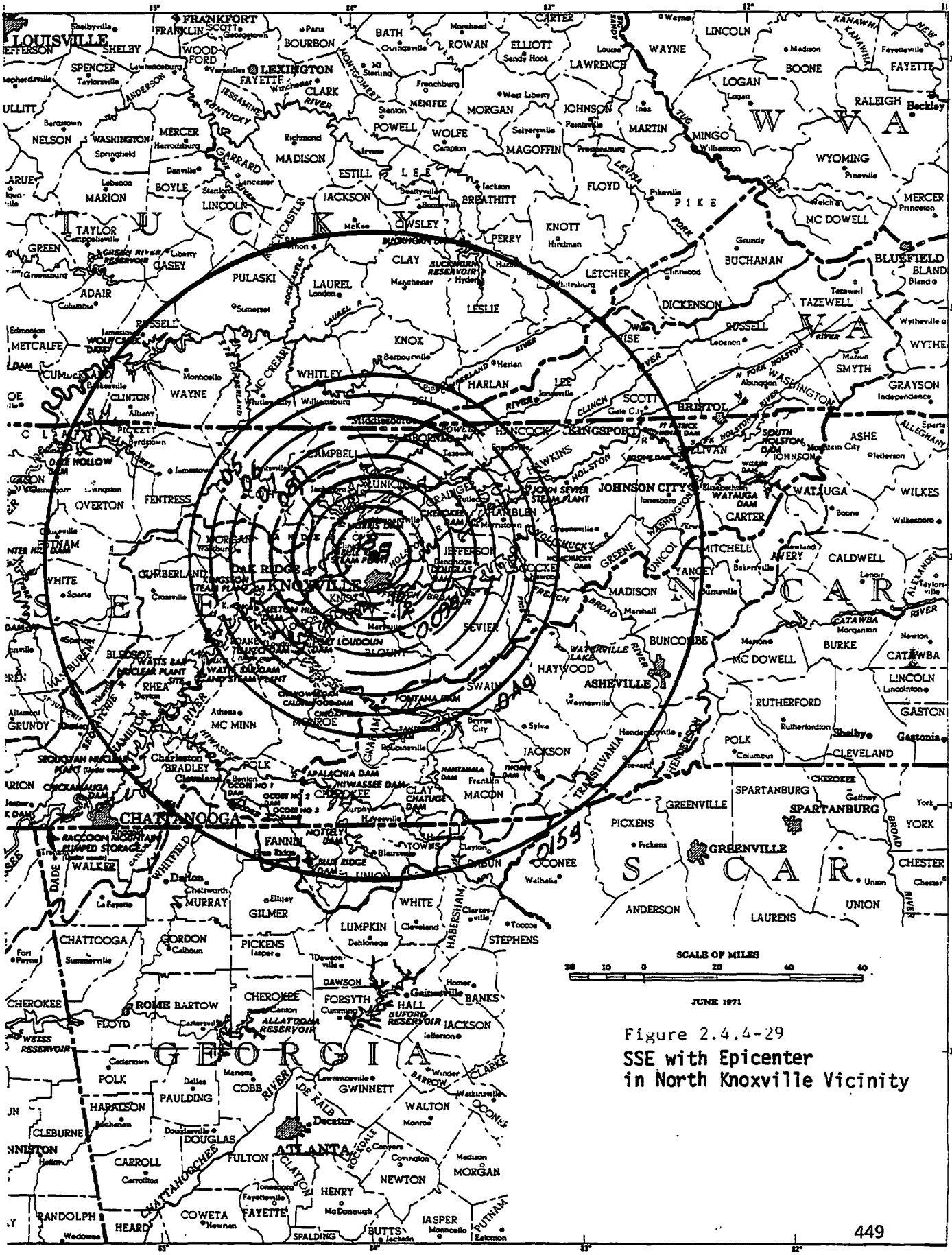

Figure 2.4.4-29
SSE with Epicenter
in North Knoxville Vicinity

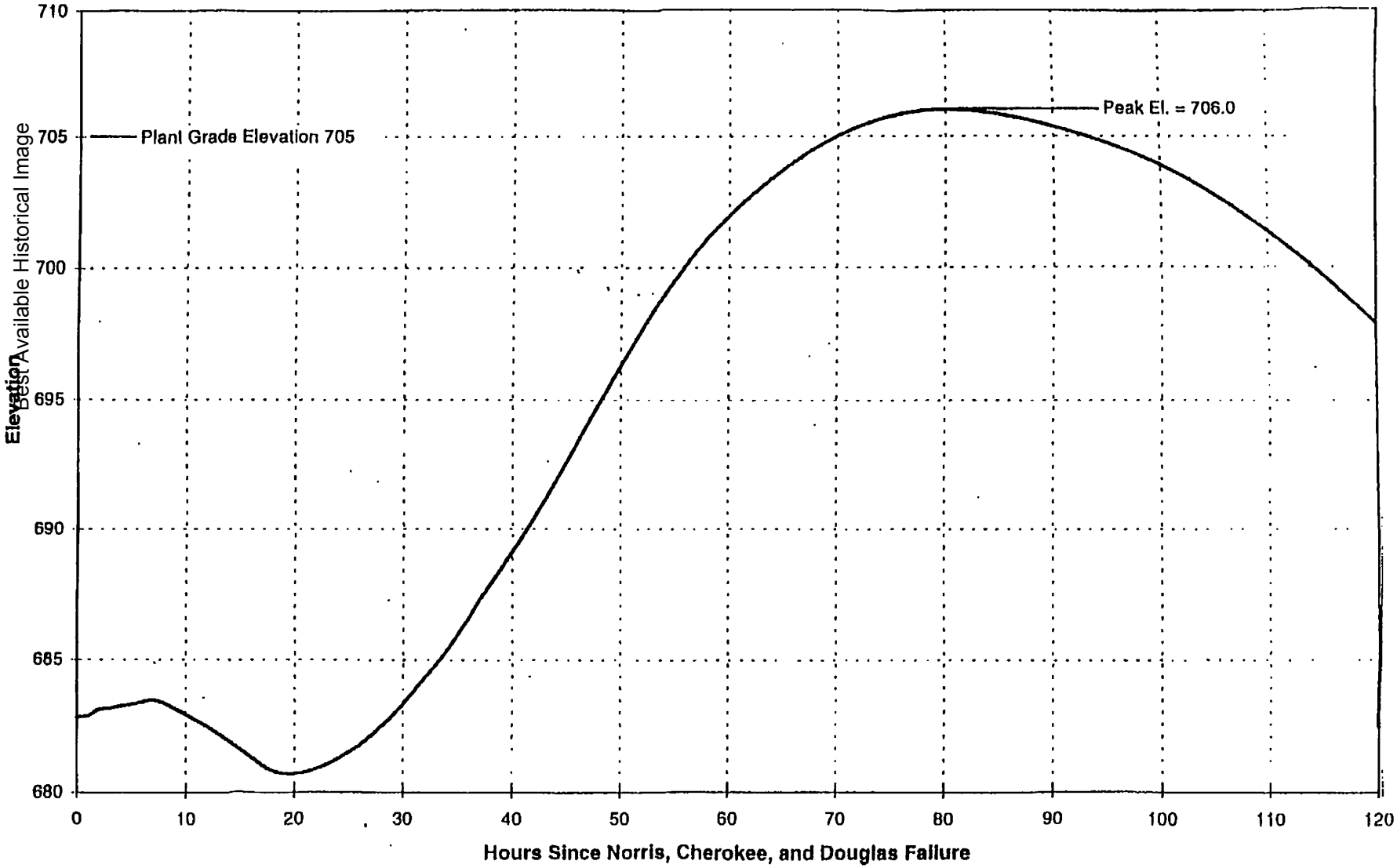

Seismic Flood Analysis - Norris, Cherokee and Douglas SSE with 25-year Flood
Sequoyah Plant

Figure 2.4.4-30

Revised by Amendment 17

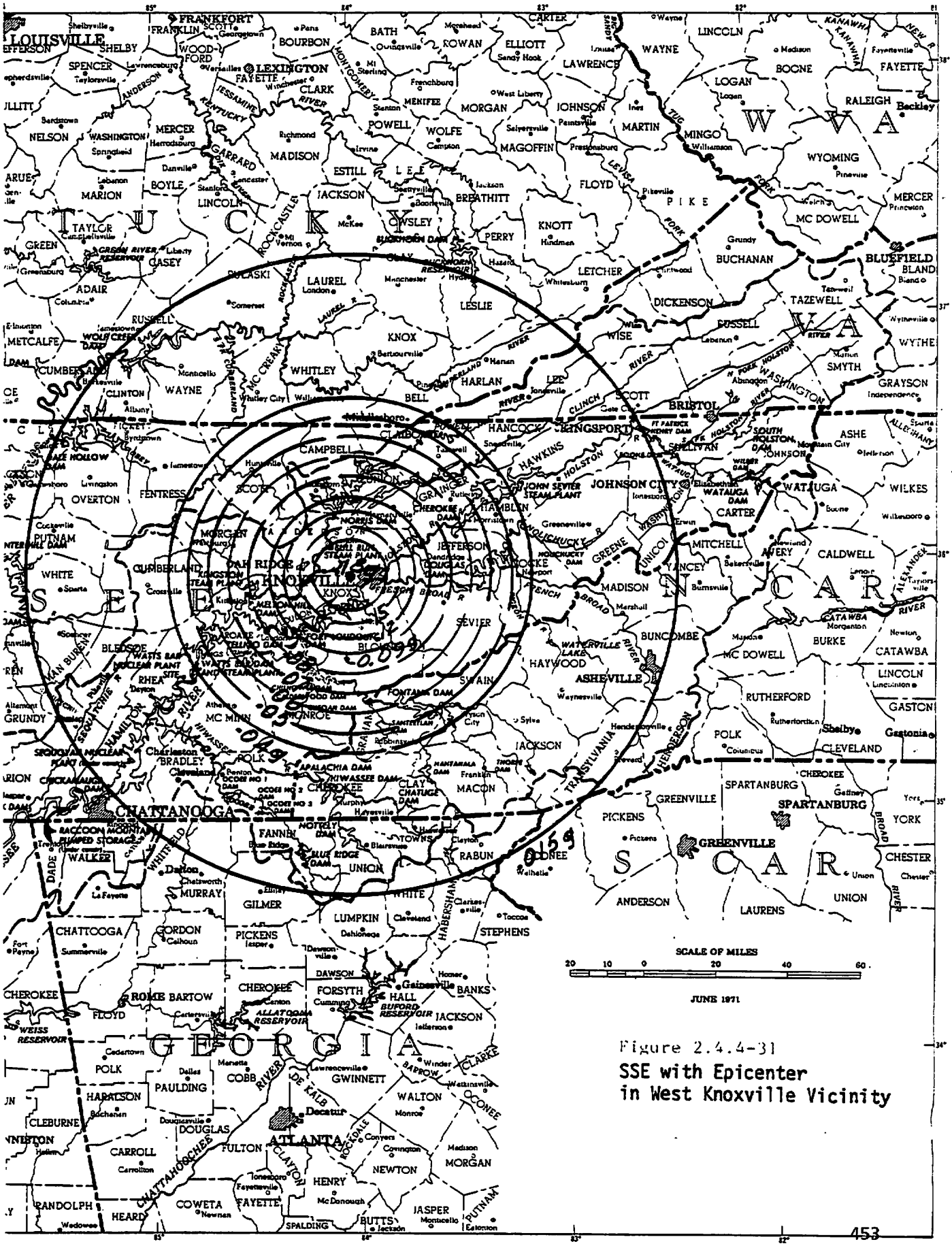

Figure 2.4.4-31
SSE with Epicenter
in West Knoxville Vicinity

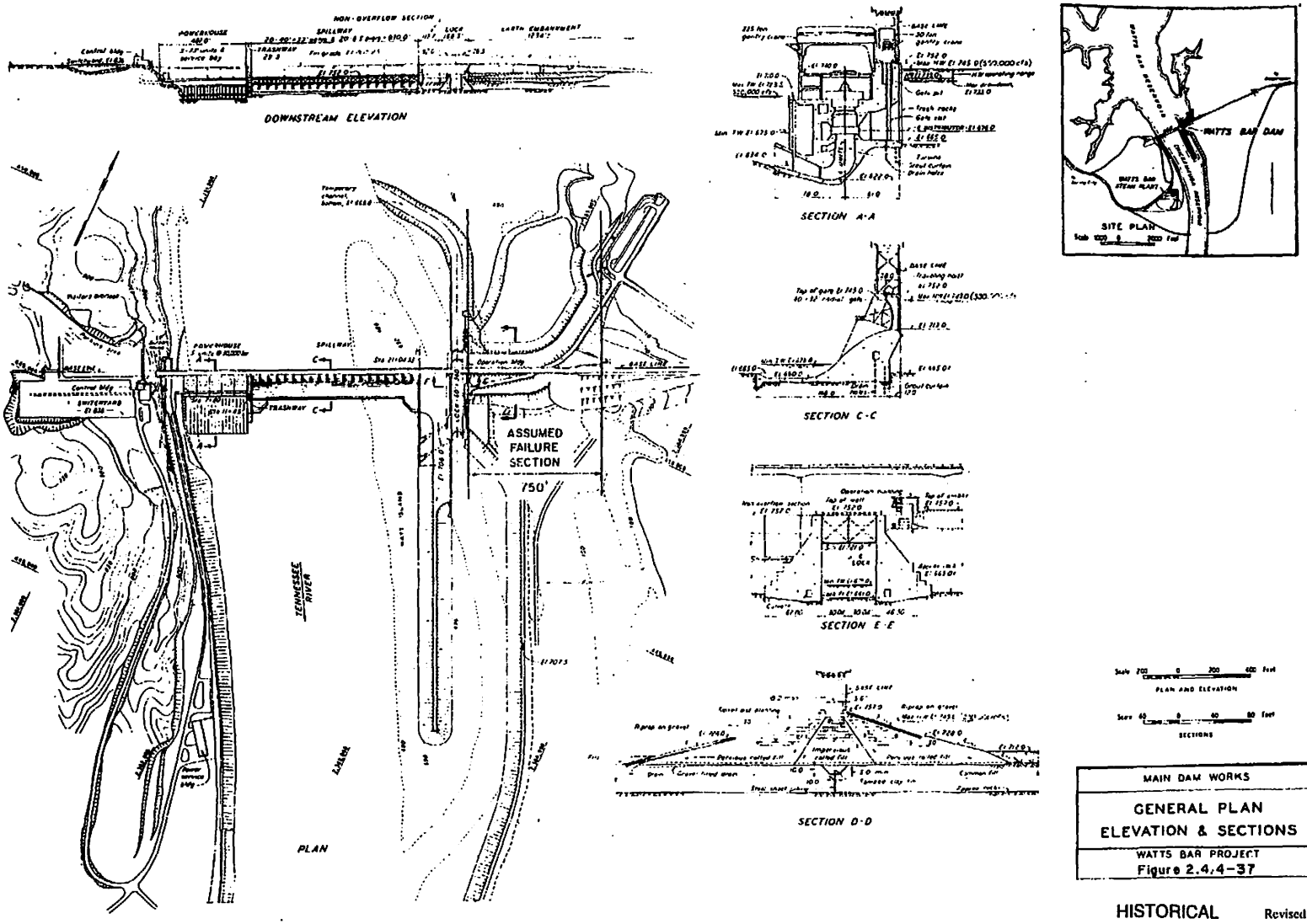

MAIN DAM WORKS
GENERAL PLAN ELEVATION & SECTIONS
WATTS BAR PROJECT Figure 2.4.4-37

HISTORICAL Revised by Amendment 17

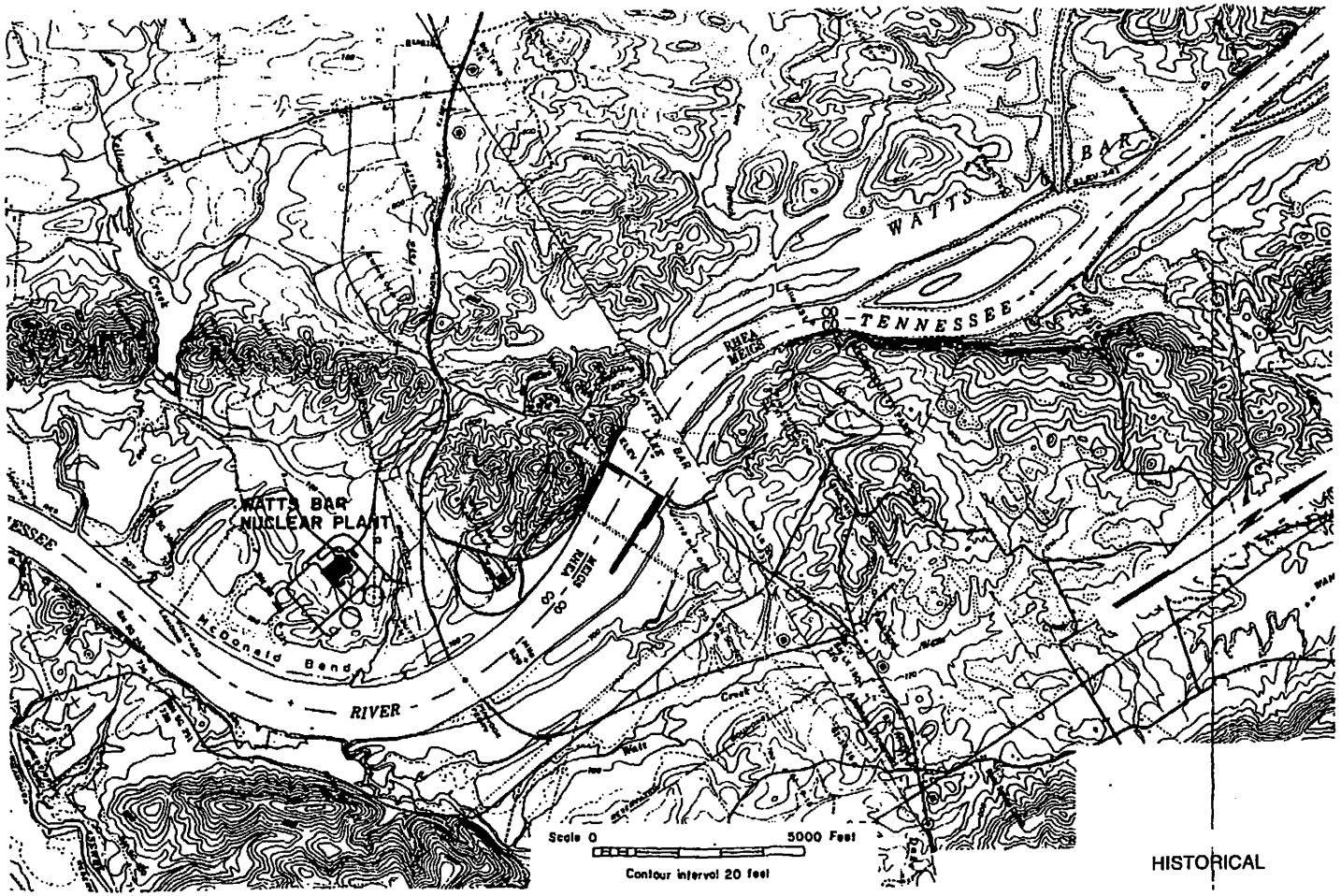

HISTORICAL

Revised by Amendment 17

Figure 2.4.4-38 Topographic Map, General Area Watts Bar Dam

Best Available Historical Image

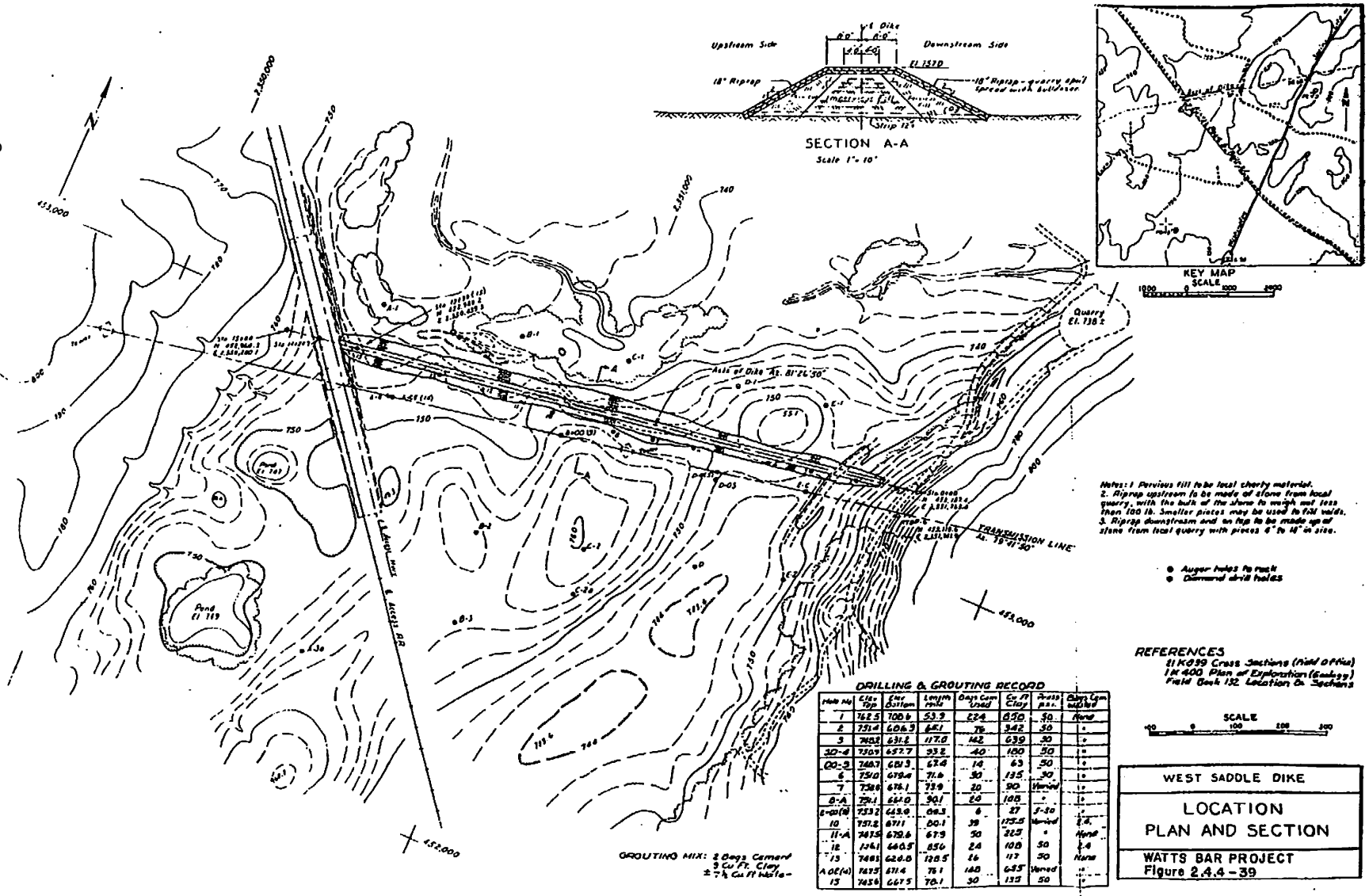

DRILLING & GROUTING RECORD

Hole No	Elev Top	Elev Bottom	Length rock	Bags Cem Used	Cu Ft Clay	Press p.s.i.	Bags Cem added
1	762.5	708.6	53.9	224	850	50	None
2	751.4	606.3	68.1	76	342	50	"
3	748.8	631.2	117.6	142	639	50	"
30-4	750.9	652.7	98.2	40	180	50	"
00-5	748.7	681.3	67.4	14	63	50	"
6	750.0	679.4	71.6	30	135	50	"
7	738.6	676.1	73.9	20	90	Varied	"
8-A	724.1	644.0	90.1	24	108	"	"
8-00(B)	733.2	649.6	68.3	6	27	5-50	"
10	757.2	671.1	86.1	39	175.5	Varied	"
11-A	748.5	672.6	67.9	50	225	"	None
12	754.1	646.5	85.6	24	108	50	"
13	748.1	626.0	128.5	26	117	50	None
A 00(A)	742.5	671.4	71.1	148	665	Varied	"
15	745.6	667.5	78.1	30	135	50	"

WEST SADDLE DIKE

LOCATION
PLAN AND SECTION

WATTS BAR PROJECT
Figure 2.4.4-39

HISTORICAL Revised by Amendment 17

Best Available Historical Image

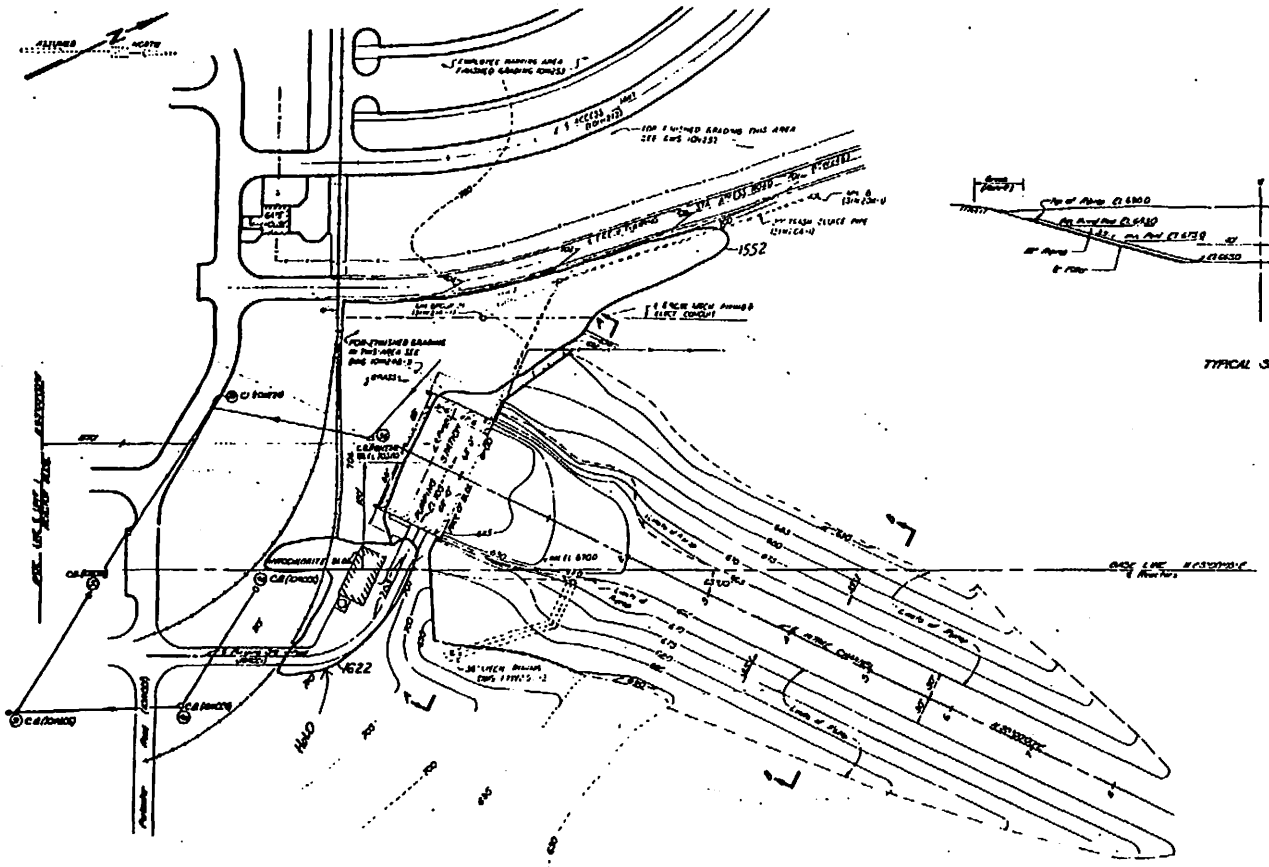

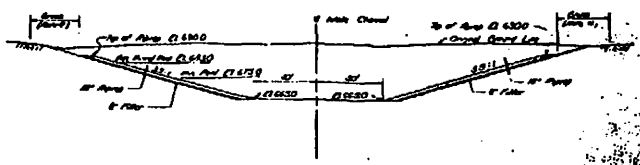

SECTION B-B
TYPICAL SECTION OF APPROACH CHANNEL

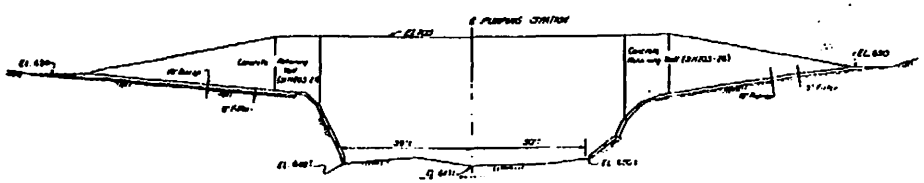

SECTION A-A

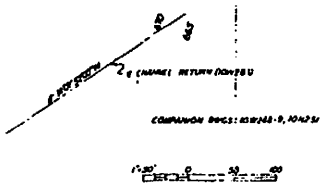

HISTORICAL Revised by Amendment 17

SEQUOYAH NUCLEAR PLANT FINAL SAFETY ANALYSIS REPORT
GRADING PLAN INTAKE CHANNEL DWG NO. 10N213 R4 FIGURE 2.4.8-1

LEGEND:

95—• Ground Water Wells

● Sequoyah Nuclear Power Plant Site

Figure 2.4.13-1
Location of Wells and Springs within 2 mile Radius

NOTE: THE INFORMATION IN THIS FIGURE IS HISTORIC AND NOT SUBJECT TO UPDATING REVISIONS.

REVISED BY AMENDMENT 83

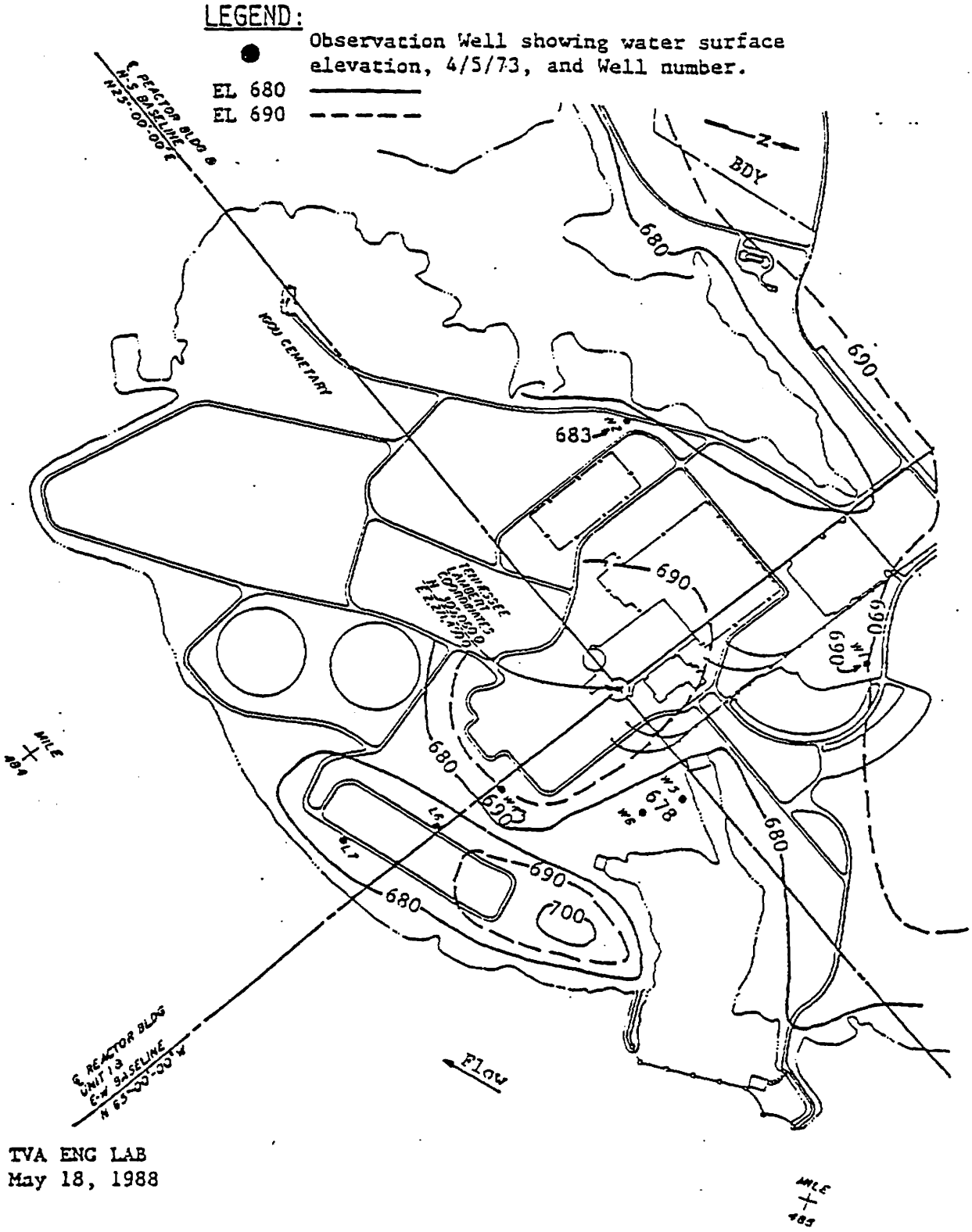

TVA ENG LAB
May 18, 1988

Figure 2.4.13-2: Sequoyah Nuclear Plant Site Monitoring Well Locations and Generalized Water-Table Map

APPENDIX 2.4A

FLOOD PROTECTION PLAN

TABLE OF CONTENTS

Section	Title	Page
	APPENDIX 2.4A FLOOD PROTECTION PLANT	
2.4A.1	INTRODUCTION	2.4A-1
2.4A.1.1	Design Basis Flood	2.4A-1
2.4A.1.2	Combinations of Events	2.4A-2
2.4A.1.3	Post Flood Period	2.4A-2
2.4A.1.4	Localized Floods	2.4A-2
2.4A.2	PLANT OPERATION DURING FLOODS ABOVE GRADE	2.4A-2
2.4A.2.1	Flooding of Structures	2.4A-2
2.4A.2.2	Fuel Cooling	2.4A-3
2.4A.3	WARNING PLAN	2.4A-5
2.4A.3.1	Rainfall Floods	2.4A-6
2.4A.3.2	Seismic Dam Failure Floods	2.4A-6
2.4A.4	PREPARATION FOR FLOOD MODE	2.4A-6
2.4A.4.1	Reactors Initially Operating at Power	2.4A-7
2.4A.4.2	Reactor Initially Refueling	2.4A-7
2.4A.4.3	Plant Preparation Time	2.4A-7
2.4A.5	EQUIPMENT	2.4A-7
2.4A.5.1	Equipment Qualification	2.4A-8
2.4A.5.2	Temporary Modification and Setup	2.4A-8
2.4A.5.3	Electric Power	2.4A-8
2.4A.5.4	Instrument Control, Communication and Ventilation Systems	2.4A-9
2.4A.6	SUPPLIES	2.4A-9
2.4A.7	PLANT RECOVERY	2.4A-9
2.4A.8	BASIS FOR FLOOD PROTECTION PLAN IN RAINFALL FLOODS	2.4A-9
2.4A.9	BASIS FOR FLOOD PROTECTION PLAN IN SEISMIC-CAUSED DAM FAILURES	2.4A-14

LIST OF TABLES

Number	Title
2.4A-2	Critical Cases - Seismic - Caused Dam Failures Time Between Seismic Event and Selected Plantsite Flood Elevation

LIST OF FIGURES

Number	Title
2.4A-2	Flow Diagram - Flood Protection Provisions - With New ERCW Intake Station in Operation - Natural Convection Cooling (Unit 1 Shown - Unit 2 Similar)
2.4A-3	Flow Diagram - Flood Protection Provisions - With New ERCW Intake Station in Operation - Open Reactor Cooling (Unit 1 Shown - Unit 2 Similar)
2.4A-4	Sequoyah Nuclear Plant Flood Protection Plan Basis for Safe Shutdown for Plant Flooding

APPENDIX 2.4A
FLOOD PROTECTION PLAN

2.4A.1 Introduction

This appendix describes the methods by which the Sequoyah Nuclear Plant will be made capable of tolerating floods above plant grade without jeopardizing public safety. Since flooding of this magnitude, as explained in section 2.4, is most unlikely, extreme steps are considered acceptable including actions that create or allow extensive economic damage to the plant. The actions described herein will be implemented for floods ranging from slightly below plant grade, to allow for wave runup, to the Design Basis Flood (DBF).

2.4A.1.1 Design Basis Flood

The DBF is the calculated upper limit flood that includes the probable maximum flood (PMF) plus the wave runup caused by a 45-mile-per-hour overwater wind; this is discussed in subsection 2.4.3.6. The table below gives representative levels of the DBF at different plant locations.

Design Bases Flood (DBF) Levels

Probable maximum flood (still reservoir)	719.6
DBF runup on vertical external, unprotected walls	723.8
DBF surge level within flooded structures	720.1

The lower flood elevations listed above are actual DBF elevations and are not normally used for the purpose of design but are typically used in plant procedures including procedures which direct plant actions in response to postulated DBF. For purposes of designing the flood protection for systems, structures, and components, the following higher elevations should be used thus ensuring additional margin has been included in the development of design analysis.

Design Analysis Flood Levels

Maximum still reservoir	723.5
Runup on vertical external, unprotected walls	729.5
Surge level within flooded structures	724.0

See FSAR References 2.4A.10-1 and 2.4A.10-2.

In addition to level considerations, plant flood preparations will cope with the "fastest rising" flood which is the calculated flood that can exceed plant grade with the shortest prediction notice. Reservoir levels for large floods in the Tennessee Valley can be predicted well in advance.

A minimum of 27 hours, divided into two stages, is provided for safe plant shutdown by use of this prediction capability. Stage I, a minimum of 10 hours long, will commence upon a prediction that flood-producing conditions might develop. Stage II, a minimum of 17 hours long,

will commence on a confirmed estimate that conditions will provide a flood. This two-stage scheme is designed to prevent excessive economic loss in case a potential flood does not fully develop.

2.4A.1.2 Combinations of Events

Because floods above plant grade, earthquakes, tornadoes, or design basis accidents, including a loss-of-coolant accident (LOCA), are individually very unlikely, a combination of a flood plus any of these events or the occurrence of one of these during the flood recovery time or of the flood during the recovery time after one of these events is considered incredible.

Surges from seismic failure of upstream dams, however, can exceed plant grade, but to lower DBF levels, when imposed coincident with wind and certain floods. A minimum 27 hours of warning is assured so that ample time is available to prepare the plant for flooding.

2.4A.1.3 Post Flood Period

Because of the improbability of a flood above plant grade, no detailed procedures will be established for return of the plant to normal operation unless and until a flood actually occurs. If flood mode operation (subsection 2.4A.2) should ever become necessary, it will be possible to maintain this mode of operation for a sufficient period of time (100 days) so that appropriate recovery steps can be formulated and taken. The actual flood waters are expected to recede below plant grade within 1 to 6 days.

2.4A.1.4 Localized Floods

Localized plant site flooding due to the probable maximum storm (subsection 2.4.3) will not enter vital structures or endanger the plant. Plant shutdown will be forced by water ponding on the switchyard and around buildings, but this shutdown will not differ from a loss of offsite power situation as described in Chapter 15. The other steps described in this appendix are not applicable to this case.

2.4A.2 Plant Operation During Floods Above Grade

"Flood mode" operation is defined as the set of conditions described below by means of which the plant will be safely maintained during the time when flood waters exceed plant grade (elevation 705) and during the subsequent period until recovery (subsection 2.4A.7) is accomplished.

2.4A.2.1 Flooding of Structures

Only the Reactor Building, the Diesel Generator Building (DGB), and the Essential Raw Cooling Water Intake Station will be maintained essentially water tight during the flood mode. Walls and penetrations are designed to withstand all static and dynamic forces imposed by the DBF.

The Reactor Buildings protect SSCs contained within that are required for Flood Mode operations. All penetrations below the Design Analysis Flood level of elevation 724' have been sealed with seals, which are tested to withstand hydrostatic forces generated by the Design Basis Flood. Analysis demonstrates the acceptability of minor leakage through the seals into the annulus.

The lowest floor of the DGB is at elevation 722 with its doors on the uphill side facing away from the main body of flood water. This elevation is lower than the previous DBF elevation of 722.6. The 1998 reanalysis determined the still water elevation to be 719.6, with wind wave runup at the DGB to elevation 721.8. Therefore, flood levels do not exceed floor elevation of 722. The entrances into

safety-related areas and all mechanical and electrical penetrations into safety-related areas are sealed to prevent major leakage into the building for water up to the PMF, including wave runup. Due to the 1998 reanalysis this only applies to below grade features. Redundant sump pumps are provided within the building to remove minor leakage.

The Essential Raw Cooling Water (ERCW) intake station is designed to remain fully functional for floods up to the PMF, including wind-wave runup. The deck elevation (elevation 720) is below the PMF plus wind wave runup, but it is protected from flooding by the outside walls. The traveling screen wells extend above the deck elevation up to the design basis surge level. The wall penetration for water drainage from the deck in nonflood conditions is below the DBF elevation, but it is designed for sealing in event of a flood. All other exterior penetrations of the station below the PMF are permanently sealed. Redundant sump pumps are provided on the deck and in the interior rooms to remove rainfall on the deck and water seepage.

All other structures, including the service, turbine, auxiliary, and control buildings, will be allowed to flood as the water exceeds their grade level entrances. All equipment, including power cables, that is located in these structures and required for operation in the flood mode is either above the DBF or designed for submerged operation.

2.4A.2.2 Fuel Cooling

Spent Fuel Pit

Fuel in the spent fuel pit will be cooled by the normal Spent Fuel Pit Cooling (SFPC) System. The pumps are located on a platform at elevation 721 which is above the surge level of 720.1. During the flood mode of operation, heat will be removed from the heat exchangers by ERCW instead of component cooling water.

As a backup to spent fuel cooling, water from the Fire Protection (FP) System can be dumped into the spent fuel pool, and steam removed by the area ventilation system.

Reactors

Residual core heat will be removed from the fuel in the reactors by natural circulation in the Reactor Coolant (RC) system. Heat removal from the steam generators will be accomplished by adding river water from the FP System (subsection 9.5.1) and relieving steam to the atmosphere through the power relief valves. Primary system pressure will be maintained at less than 500 lb/in^2g by operation of the pressurizer relief valves and heaters. This low pressure will lessen leakage from the system. Secondary side pressure will be maintained at or below 90 psig by operation of the steam line relief valves.

An analysis has been performed to ensure that the limiting atmospheric relief capacity would be sufficient to remove steam generated by decay heat. At times beyond approximately 10 hours following shutdown of the plant two relief valves have sufficient capacity to remove the steam generated by decay heat. Since a minimum of 27 hours flood warning is available it is concluded that the plant could be safely shutdown and decay heat removed by operation of only two relief valves. Reference FSAR 2.4A.10-1.

The main steam power operated relief valves will be adjusted to maintain the steam pressure at or below 90 psig. If this control system malfunctions, then the controls in the main control room can be utilized to operate the valves in an open-closed manner. Also, a manual loading station and the relief valve handwheel provide additional backup control for each relief valve. The secondary side steam pressure can be maintained for an indefinite time by the means outlined above.

The cooling water flow paths conform to the single failure criteria as defined in FSAR Section 3.1.1. In particular, all active components of the secondary side feedwater supply and ERCW supply are redundant and can therefore tolerate a single failure in the short or long term. A passive failure, consistent with the 50 gpm loss rate specified in FSAR Section 3.1.1, can be tolerated for an indefinite period without interrupting the required performance in either supply.

If one or both reactors are open to the containment atmosphere as during the refueling operations, then the decay heat of any fuel in the open unit(s) and spent fuel pit will be removed in the following manner. The refueling cavity will be filled with borated water (approximately 2000 ppm boron concentration) from the refueling water storage tank. The SFPC System pump will take suction from the spent fuel pit and will discharge to the SFPC System heat exchangers. The SFPC System heat exchanger output flow will be directed by a piping connection to the Residual Heat Removal (RHR) System heat exchanger bypass line. The tie-in locations in the SFPC System and the RHR System are shown in Figures 9.1.3-1 and 5.5.7-1, respectively. This connection will be made using prefabricated, in- position piping which is normally disconnected. During flood mode preparations, the piping will be connected using prefabricated spool pieces.

Prior to flooding, valve number 78-513 (refer to Figure 9.1.3-1) and valves FCV 74-33, and 74-35 (refer to Figure 5.5.7-1) will be closed; valves HCV 74-36, 74-37, FCV 74-16, 74-28, 63-93, and 63-94 (refer to Figure 5.5.7-1 and 6.3.1-1) will be opened or verified open. This arrangement will permit flow through the RHR heat exchangers and the four normal cold leg injection paths to the reactor vessel. The water will then flow downward through the annulus, upward through the core (thus cooling the fuel), then exit the vessel directly into the refueling cavity. This results in a water level differential between the spent fuel pit and the refueling cavity with sufficient water head to assure the required return flow through the 20-inch diameter fuel transfer tube thereby completing the path to the spent fuel pit.

Except for a portion of the RHR System piping, the only RHR System components utilized below flood elevation are the RHR System heat exchangers. Inundation of these passive components will not degrade their performance for flood mode operation. After alignment, all valves in this cooling circuit located below the maximum flood elevation will be disconnected from their power source to assure that they remain in a safe position.

The modified cooling circuit for open reactor cooling will be assured of two operable SFPC System pumps (a third pump is available as a backup) as well as two SFPC System heat exchangers. Also, the large RHR System heat exchangers are supplied with essential raw cooling water during the open reactor mode of fuel cooling; these heat exchangers provide an additional heat sink not available for normal spent fuel cooling.

Fuel coolant temperature calculations, assuming conservative heat loads and the most limiting, single active failure in the SFPC System, indicate that the coolant temperatures are acceptable.

The temperatures can be maintained at a value appreciably less than the fuel pit temperature calculated for the nonflood spent fuel cooling case when assuming the loss of one equipment train.

As further assurance, the open reactor cooling circuit was aligned and tested, during pre-operational testing, to confirm flow adequacy. Normal operation of the RHR System and SFPC System heat exchangers will confirm the heat removal capabilities of the heat exchangers.

High spent fuel pit temperature will cause an annunciation in the MCR, thus indicating equipment malfunction. Additionally, that portion of the cooling system above flood water will be frequently inspected to confirm continued proper operation.

For either mode of reactor cooling, leakage from the Reactor Coolant System will be collected, to the extent possible, in the reactor coolant drain tank; nonrecoverable leakage will be made up from supplies of clean water stored in the four cold leg accumulators, the pressurizer relief tank, the cask decontamination tank, and the demineralized water tank. If these sources prove insufficient, the FP System can be connected to the Auxiliary Charging System (subsection 9.3.5) as a backup. Whatever the source, makeup water will be filtered, demineralized, tested, and borated, as necessary, to the normal refueling concentration, and pumped by the Auxiliary Charging System into the reactor (see Figures 2.4A-2 and 2.4A-3).

Power

Electric power will be supplied by the onsite diesel generators starting at the beginning of Stage II or when offsite power is lost, whichever occurs first (subsection 2.4A.5.3).

Cooling of Plant Loads

Plant cooling requirements, with the exception of the FP System which must supply feedwater to the steam generators, will be met by the ERCW System (refer to subsection 9.2.2).

Plant Water Supply

The plant water supply is thoroughly discussed in subsection 9.2.2. The following is a summary description of the water supply provided for use during flooded plant conditions. The ERCW station is designed to remain fully functional for all floods up to and including the DBF. The CCW intake forebay will provide a water supply for the fire/flood mode pumps. If the flood approaches DBF proportions, there is a remote possibility that Chickamauga Dam will fail. Such an event would leave the Sequoyah Plant CCW intake forebay isolated from the river as flood water recedes below EL 665. Should this event occur, the CCW forebay has the capacity of retained water to supply two steam generators in each unit and provide spent fuel pit with evaporation makeup flow until CCW forebay inventory makeup is established. The ERCW station is designed to be operable for all plant conditions and includes provisions for makeup to the forebay. Reference FSAR 2.4A.10-1.

2.4A.3 Warning Plan

Plant grade elevation 705 can be exceeded by both rainfall floods and seismic-caused dam failure floods. A warning plan is needed to assure plant safety from these floods.

2.4A.3.1 Rainfall Floods

Protection of the Sequoyah Plant from the low probability rainfall floods that might exceed plant grade depends on a flood warning issued by TVA's River Operations as described in Section 2.4A.8. With TVA's extensive climate monitoring and flood predicting systems and flood control facilities, floods in the Sequoyah area can be reliably predicted well in advance. The Sequoyah Nuclear Plant flood warning plan will provide a minimum preparation time of 27 hours including a 3 hour margin for operation in the flood mode. Four additional, preceding hours will provide time to gather data and produce the warning. The warning plan will be divided into two stages--the first a minimum of 10 hours long and the second of 17 hours--so that unnecessary economic penalty can be avoided while adequate time is ensured for preparing for operation in the flood mode.

The first stage, Stage I, of shutdown will begin when there is sufficient rainfall on the ground in the upstream watershed to yield a projected plant site water level of 697 in the winter months (October 1 through April 15) and 703 in the summer (April 16 through September 30). This assures that the additional time required is available when shutdown is initiated. The water level of 703 (two feet below plant grade) will allow margin so that waves due to high winds cannot disrupt the flood mode preparation. Stage I will allow preparation steps causing some damage to be sustained but will withhold major economic damage until the Stage II warning assures a forthcoming flood above grade.

The plant preparation status will be held at Stage I until either Stage II begins or TVA's River Operations determines that flood waters will not exceed elevation 703 at the plant. The Stage II warning will be issued only when enough rain has fallen to predict that elevation 703 is likely to be exceeded.

2.4A.3.2 Seismic Dam Failure Floods

Protection of the Sequoyah plant from flood waves generated by seismically caused dam failures which exceed plant grade depends on TVA’s River Operation organization to identify when a critical combination of dam failures and floods exist. There are nine upstream dams whose failure, in combination coincident with certain storm conditions, would cause a flood to exceed plant grade. These dams are Norris, Cherokee, Douglas, Fort Loudoun, Fontana, Hiwassee, Apalachia, Blue Ridge, and Tellico.

2.4A.4 Preparation for Flood Mode

At the time the initial flood warning is issued, the plant may be operating in any normal mode. This means that either or both units may be at power or either unit may be in any stage of refueling.

2.4A.4.1 Reactors Initially Operating at Power

If both reactors are operating at power, Stage I and then, if necessary, Stage II procedures will be initiated. Stage I procedures will consist of a controlled reactor shutdown and other easily revokable steps such as moving supplies necessary to the flood protection plan above the DBF level and making temporary connections and load adjustments on the onsite power supply. Stage II procedures will be the less easily revokable and more damaging steps necessary to have the plant in the flood mode when the flood exceeds plant grade. The fire/flood mode pumps may supply auxiliary feedwater for reactor cooling (Reference 3). Other essential plant cooling loads will be transferred from the component cooling water to the ERCW System (subsection 9.2.2). Radioactive Waste System (Chapter 11) and CVCS tanks, which are susceptible to flotation will be secured by either filling the tanks during flood preparations or by opening the tanks to allow floodwaters to enter, tanks which are adequately anchored to prevent floatation are exempt from these requirements. Some power and communication lines running beneath the DBF and not designed for submerged operation will require disconnection. Batteries beneath the DBF will be disconnected.

2.4A.4.2 Reactor Initially Refueling

If time permits, fuel will be removed from the unit(s) undergoing refueling and placed in the spent fuel pit; otherwise fuel cooling will be accomplished as described in subsection 2.4A.2.2. If the refueling canal is not already flooded, the mode of cooling described in subsection 2.4A.2.2 requires that the canal be flooded with borated water from the refueling water storage tank. If the flood warning occurs after the reactor vessel head has been removed or at a time when it could be removed before the flood exceeds plant grade, the flood mode reactor cooling water will flow directly from the vessel into the refueling cavity. If the warning time available does not permit this, then the upper head injection piping will be disconnected above the vessel head to allow the discharge of water through the four upper head injection standpipes. Additionally, it is required that the prefabricated piping be installed to connect the RHR and SFPC Systems, and that ERCW be directed to the secondary side of the RHR System and SFPC System heat exchangers.

2.4A.4.3 Plant Preparation Time

All steps needed to prepare the plant for flood mode operation can be accomplished within 24 hours of receipt of the initial warning that a flood above plant grade is possible. An additional 3 hours are available for contingency margin before wave runup from the rising flood might enter the buildings. Site grading and building design prevent any flooding before the end of the 27 hour preflood period.

2.4A.5 Equipment

Both normal plant components and specialized flood-oriented supplements will be utilized in coping with floods. All such equipment required in the flood mode is either located above the DBF or is within a nonflooded structure or is designed for submerged operation. Systems and components needed only in the preflood period are protected only during that period.

2.4A.5.1 Equipment Qualification

To ensure capable performance in this highly unlikely but rigorous, limiting design case, only high quality components will be utilized. Active components are redundant or their functions diversely supplied. Since no rapidly changing events are associated with the flood, repairability offers reinforcement for both active and passive components during the long period of flood mode operation. Equipment potentially requiring maintenance will be accessible throughout its use, including components in the Diesel Generator Building.

2.4A.5.2 Temporary Modification and Setup

Normal plant components used in flood mode operation and in preparation for flood mode operation may require modification from their normal plant operating configuration. Such modification, since it is for a limiting design condition and since extensive economic damage is acceptable, will be permitted to damage existing facilities for their normal plant functions. However, most alterations will be only temporary and nondestructive in nature. For example, the switchover of plant cooling loads from the component cooling water to the ERCW System will be done through valves and a prefabricated spool piece, causing little system disturbance or damage.

Equipment especially provided for the flood design case includes both permanently installed components and more portable apparatus that will be emplaced and connected into other systems during the preflood period.

Detailed procedures to be used under flood mode operation have been developed and are incorporated in the plant's Abnormal Operating Instructions.

2.4A.5.3 Electric Power

Because there is a possibility that high winds may destroy powerlines and disconnect the plant from offsite power at any time during the preflood transition period, only onsite power will be used once Stage II of the preparation period begins. While most equipment requiring alternating current electric power is a part of the permanent emergency onsite power system, other components will be temporarily connected, when the time comes, by prefabricated jumper cables.

All loads that are normally supplied by onsite power but are not required for the flood will be switched out of the system during the preflood period. Those loads used during the preflood period but not during flood mode operation will be disconnected when they are no longer needed. During the preparation period, all power cables running beneath the DBF level, except those especially designed for submerged operation, will be disconnected from the onsite power system. Similarly, direct current electric power will be disconnected from unused loads and potentially flooded lines. Charging will be maintained for each battery by the onsite alternating current power system as long as it is required. Batteries that are beneath the DBF will be disconnected during the preflood period when they are no longer needed.

2.4A.5.4 Instrument Control, Communication and Ventilation Systems

All instrument, control, and communication lines that will be required for operation in the flood mode are either above the DBF or within a nonflooded structure or are designed for submerged operation. Unneeded cables that run below the DBF will be disconnected to prevent short circuits.

Redundant means of communications are provided between the central control area (the main and auxiliary control rooms) and all other vital areas that might require operator attention, such as the Diesel Generator Building.

Instrumentation is provided to monitor all vital plant parameters such as the reactor coolant temperature and pressure and steam generator pressure and level. Control of the pressurizer heaters and relief valves and steam generator feedwater flow and atmospheric relief valves will ensure continued natural circulation core cooling during the flood mode. All other important plant functions will be either monitored and controlled from the main control area or, in some cases where time margins permit, from other points in the plant that are in close communication with the main control area. Ventilation, when necessary, and limited heating or air-conditioning will be maintained for all points throughout the plant where operators might be required to go or where required by equipment heat loads.

2.4A.6 Supplies

All equipment and most supplies required for the flood are on hand in the plant at all times. Some supplies will require replenishment before the end of the period in which the plant is in the flood mode. In such cases supplies on hand will be sufficient to last through the short time (subsection 2.4A.1.3) that flood waters will be above plant grade and until replenishment can be supplied. For instance, there is sufficient diesel generator fuel available at the plant to last for 3 or 4 weeks; this will allow sufficient margin for the flood to recede and for transportation routes to be reestablished.

2.4A.7 Plant Recovery

The plant is designed to continue safely in the flood mode for 100 days even though the water is not expected to remain above plant grade for more than 1 to 6 days. After recession of the flood, damage will be assessed and detailed recovery plans developed. Arrangements will then be made for reestablishment of offsite power and removal of spent fuel.

The 100-day period provides more than adequate time for the development of procedures for any maintenance, inspection, or installation of replacements for the recovery of the plant or for a continuation of flood mode operations in excess of 100 days. A decision based on economics will be made on whether or not to regain the plant for power production. In either case, detailed plans will be formulated after the flood, when damage can be accurately assessed.

2.4A.8 Basis For Flood Protection Plan In Rainfall Floods

Summary

Large Tennessee River floods can exceed plant grade elevation 705 at Sequoyah Nuclear Plant. Plant safety in such an event requires shutdown procedures which may take 24 hours to

implement. TVA flood forecast procedures will provide at least 27 hours of warning before river levels reach elevation 703. Use of elevation 703, 2 feet below plant grade, provides enough freeboard to prevent waves from 45-mile-per-hour, overwater winds from endangering plant safety during the final hours of shutdown activity. For conservatism the fetches calculated for the PMF (Figures 2.4.3-15 and 2.4.3-16) were used to calculate maximum wind wave additive to the reservoir surface at elevation 703 feet msl. The maximum wind additive to the reservoir surface would be 2.8 feet and would not endanger plant safety during the final hours of shutdown. This is due to the long shallow approach and the waves breaking at the perimeter road (elevation 705 feet msl). After the waves break there is not sufficient depth or distance between the perimeter road and the safety-related facilities for new waves to be generated. Forecast will be based upon rainfall already reported to be on the ground.

Different target river level criteria are needed for winter use and for summer use to allow for seasonally varied reservoir levels and rainfall potential.

To be certain of 27 hours for preflood preparation, warnings of floods with the prospect of reaching elevation 703 must be issued early; consequently, some of the warnings may later prove to have been unnecessary. For this reason preflood preparations are divided into two stages. Stage I steps, requiring 10 hours, would be easily revokable and cause minimum damage. The estimated probability is less than 0.0026 that a Stage I warning will be issued during the 40-year life of the plant.

Additional rain and streamflow information obtained during Stage I activity will determine if the more damaging steps of Stage II need to be taken with the assurance that at least 17 hours will be available before elevation 703 is reached. The estimated probability is less than 0.0010 that shutdown will need to continue into Stage II during plant life.

Flood forecasting to assure adequate warning time for safe plant shutdown during floods will be by River Operations of River System Operations.

<u>TVA Forecast System</u> (HISTORICAL INFORMATION)

TVA has in constant use an extensive, effective system to forecast flow and elevation as needed in the Tennessee River Basin. This permits efficient operation of the reservoir system and provides warning of when water levels will exceed critical elevations at selected, sensitive locations.

Elements of the present (2001) forecast system above Sequoyah Nuclear Plant include the following:

1. One hundred sixty (160) rain gages measure rainfall, with an average density of 165 square miles per rain gage. Of these gages 112 are owned by TVA, 35 are owned by the National Weather Service (NWS), 7 are owned by the United States Geological Service (USGS), 2 are owned by the United States Corps of Engineers (USACE), and 4 are owned by Alcoa. Most of these gages are tipping buckets collector type and the transmission of the data is either by satellite or telephone. At some of the gages located at hydroplants, the data is manually read.

Information normally is received daily from the gages at 6 a.m. and at least every 6 hours during flood periods. Close interval rainfall reports can be obtained from a majority of the gages if needed.

2. Streamflow data are received for 35 gages from 16 TVA gages amd 19 USGS gages. These gages trasmit their data either by satellite or telephone or both. Discharge data are received from 26 hydroplants. Of these plants, 25 also transmit headwater elevation data, and 13 transmit tailwater elevation data. Therefore, steamflow data are available from 61 locations. Streamflow data are received daily at 8 a.m. and at least every 2 hours if needed during flood operations.

3. Weather forecasts including quantitative precipitation forecasts are received four times daily and at other times when changes are expected.

4. Computer programs which translate rainfall into streamflow based on current runoff conditions and which permit a forecast of flows and elevations based upon both observed and predicted rainfall. Two separate computers are utilized and are designed to provide backup for each other. One computer is used primarily for data collection, with the other used for executing forecasting programs for reservoir operations. The time interval between receiving input data and producing a forecast is less than 4 hours. Forecasts normally cover at least a 8-day period.

As effective as the forecast system already is, it is constantly being improved as new technology provides better methods to interrogate the watershed during floods and as the watershed mathematical model and computer system are improved. Also, in the future, improved quantitative precipitation forecasts may provide a more reliable early alert of impending major storm conditions and thus provide greater flood warning time.

The TVA forecast center is manned 24 hours a day. Normal operation produces two forecasts daily, one by 12 noon based on data collected at 6 a.m. Central time, and the second by 4 a.m. based on data collected at midnight Central Time. When serious flood situations demand, forecasts are produced every 4 hours.

Basic Analysis

To develop a forecast procedure to assure safe shutdown of Sequoyah Nuclear Plant for flooding, 17 hypothetical PMP storms, including their antecedent storms, were analyzed. They enveloped potentially critical seasonal variations and time distributions of rainfall. To be certain that fastest rising flood conditions were included, the effects of varied time distribution of rainfall were tested by alternatively placing the maximum daily PMP on the first, the middle, and the last day of the 3-day main storm. In each day the maximum 6-hour depth was placed during the second interval except when the maximum daily rain was placed on the last day. Then the maximum 6-hour amount was placed in the last 6 hours.

The procedures used to compute flood flows and elevations are described in subsections 2.4.3.1, 2.4.3.2, and 2.4.3.3. Some flood events were analyzed using earlier versions of the watershed model described in subsection 2.4.3.3. Those events which established important elements of the warning system or those where the present model might produce significant differences in warning times have been reevaluated. Events reevaluated have been noted either in tables or figures where appropriate.

The warning system is based on those storm situations which resulted in the shortest time interval between watershed rainfall and elevation 703, thus assuring that this elevation could be predicted at least 27 hours in advance.

Hydrologic Basis for Warning System

A minimum of 27 hours has been allowed for preparation of the plant for operation in the flood mode. An additional 4 hours for communication and forecasting computations are provided to translate rain on the ground to river elevations at the plant. Hence the warning plan must provide 31 hours from arrival of rain on the ground until critical elevation 703 could be reached. The 27 hours allowed for shutdown at the plant are utilized for a minimum of 10 hours of Stage I preparation and an additional 17 hours for Stage II preparation. This 27 hour allocation includes a 3-hour margin.

Although river elevation 703, 2 feet below plant grade to allow for wind waves, is critical during final stages of plant shutdown for flooding, lower forecast target levels are used in most situations to assure that the 27 hours preflood transition interval will always be available. The target river levels differ with season.

During the October 1 through April 15 "winter" season, Stage I shutdown procedures will be started as soon as target river elevation 697 has been forecast. Shutdown will be carried to completion if and when target river elevation 703 has been forecast. Corresponding target river elevation for the April 16 through September 30 "summer" season is 703. The one target river elevation in the summer season permits waiting to initiate shutdown procedures until enough rain is on the ground to forecast reaching critical elevation 703; shutdown would then be initiated and carried to completion.

Inasmuch as the hydrologic procedures and target river elevations have been designed to provide adequate shutdown time in the fastest rising flood, longer times will be available in other floods. In such cases there will be a waiting period after the Stage I 10-hour shutdown activity during which activities shall be in abeyance until it is predicted from recorded rainfall that Stage II shutdown should be implemented or it is determined from weather conditions that plant operation can be resumed.

Resumption of plant operation following Stage I shutdown activities will be allowable only after flood levels and weather conditions have returned to a condition in which 27 hours of warning will again be available.

River Scheduling of River Operations prepares at least an 8-day water level forecast seven days per week for Tennessee River locations. During prospective flooding conditions forecasts can be prepared 4 times a day so that warnings for Sequoyah will assure that 27 hours always will be available to shut down the plant and prepare it for flooding.

Hydrologic Basis for Target Stages

Figure 2.4A.-4, in four parts, shows how target forecast flood elevations at the Sequoyah plant have been determined to assure adequate warning times. The floods shown are the fastest

rising floods at the site which are produced by the 21,400-square-mile PMP with downstream centering described in subsection 2.4.3.1. The storms are the main PMP amounts and have been preceded 3 days earlier by a 3-day storm having 40 percent of the main storm rainfall. This has caused soil moisture to be high and reservoirs to be well above seasonal levels when the main storm begins.

Figure 2.4A.-4 (A, B, and C) shows the winter PMP which could produce the fastest rising flood which would cross plant grade and variations caused by changed time distribution. The fastest rising flood occurs during a PMP when the 6-hour increments increase throughout the storm with the maximum 6 hours occurring in the last period. Figure 2.4A-4 (B) shows the essential elements of this storm which provides the basis for the warning scheme. In this flood 9.2 inches of rain would have fallen 31 hours (27 + 4) prior to the flood crossing elevation 703 and would produce elevation 697 at the plant. Hence, any time rain on the ground results in a predicted plant stage of 697 a Stage I shutdown warning will be issued. Examination of Figure 2.4A.-4 (A and C) shows that following this procedure in these noncritical floods would result in a lapsed time of 42 and 44 hours between when 9.2 inches had fallen and the flood would cross critical elevation 703.

An additional 2.2 inches of rain must fall promptly for a total of 11.4 inches of rain to cause the flood to cross critical elevation 703. In the fastest rising flood, Figure 2.4A.-4 (B), this rain would have fallen in the next 5 hours. A Stage II warning would be issued within the next 4 hours. Thus, the Stage II warning would be issued 5 hours after issuance of a Stage I warning and 22 hours before the flood would cross critical flood elevation 703. In the slower rising floods, Figure 2.4A.-4 (A and C), the time between issuance of a Stage I warning and when the 11.4 inches of rain required to put the flood to elevation 703 would have occurred is 6 and 10 hours respectively. This would result in issuance of a Stage II warning not less than 4 hours later or 32 and 30 hours respectively before the flood would reach elevation 703.

The summer flood shown by Figure 2.4A.-4 (D), with the maximum 1-day rain on the last day provides controlling conditions when reservoirs are at summer levels. At a time 31 hours (27 + 4) before the flood reaches elevation 703, 11 inches of rain would have fallen. This 11 inches of rain, under these runoff conditions, would produce critical elevation 703, so this level becomes both the Stage I and Stage II target.

The above criteria all relate to forecasts which use rain on the ground. In actual practice quantitative rain forecasts, which are already a part of daily operations, would be used to provide advance alerts that need for shutdown may be imminent. Only rain on the ground, however, is included in the procedure for firm warning use.

Because the above analyses have used fastest possible rising floods at the plant, all other floods will allow longer warning times than required for all physical plant shutdown activity.

In summary, the predicted target levels which will assure adequate shutdown times are:

Season	Forecast Flood Elevations at Sequoyah For Stage I Shutdown	For Stage II Shutdown
Winter (October 1-April 15)	697	703
Summer (April 16-September 30)	703	703

Communications Reliability (HISTORICAL INFORMATION)

Communication between projects in the TVA power system is via (a) TVA owned microwave network, (b) Fiber-Optic System, and (c) by commercial telephone. In emergencies, additional communication links are provided by Transmission Power Supply radio network. The four networks provide a high level of dependability against emergencies.

The hydrologic network for the watershed above Sequoyah that would be available in flood emergencies if commecial telephone communications is lost include 138 rainfall gages (24 at power installations and 114 satellite and file transfer gages) and 47 streamflow gages (26 at hydroplants, 20 satellite gages, and 1 file transfer gage). River Scheduling is linked to the TVA power system by all four communication networks. The data from the satellite gages are received via a data collection platform-satellite computer system located in the River Scheduling's office. These are so distributed over the watershed that reasonable flood forecasting can be done from this data while the balance of data is being secured from the remaining hydrologic network stations.

The preferred, complete coverage of the watershed, employ 160 rainfall and 61 streamflow locations above the Sequoyah plant. Involved in the communications link to these locations are routine radio, radio satellite, and commercial telephone system networks. In an emergency, available radio communications would be called upon to assist.

The various networks proved to be capable in the large floods of 1957, 1963, 1973, 1984, 1994, and 1998 of providing the rain and streamflow data needed for reliable forecasts.

2.4A.9 Basis for Flood Protection Plan in Seismic-Caused Dam Failures

Floods resulting from combined seismic and flood events can exceed plant grade, thus requiring emergency measures. The 1998 reanalysis showed that only two combinations of seismic dam failures coincident with a flood would result in floods above plant grade: (1) failure of Fontana, Hiwassee, Apalachia, and Blue Ridge Dams in the one-half SSE concurrent with a 1/2 PMF, (2) SSE failure of Norris, Cherokee, and Douglas concurrent with a 25 year flood. As shown in Table 2.4.4-1 all other potentially critical candidates would create flood levels below plant grade elevation 705.

Dam failure during non-flood periods would not present a problem at the plant. The reanalysis showed that failure in a non-flood period and at summer flood guide levels in the most critical dam failure combination (SSE failure of Norris, Cherokee and Douglas) would produce a maximum elevation of 703.6 at the plant, 1.4 feet below plant grade. All other combinations in non-flood periods would produce elevations much lower.

The time from seismic occurrence to arrival of failure surge at the plant is adequate to permit safe plant shutdown in readiness for flooding. Table 2.4A-2 lists the time between the postulated seismic event and when the flood wave would exceed plant grade elevation 705 and elevation 703. Use of elevation 703 provides a margin for possible wind wave effects.

The warning plan for safe plant shutdown is based on the fact that a combination of critically centered large earthquake and rain produced flood conditions must coincide before the flood wave from seismically caused dam failures will cross plant grade. In flood situations, an extreme earthquake must be precisely located to fail three or more major dams before a flood threat to the site would exist.

The combination producing the shortest time interval between seismic event and plant grade crossing is a one-half SSE located so as to fail Fontana, Hiwassee, Apalachia, and Blue Ridge Dams during the one-half PMF. The time between the seismic event and the resulting flood wave crossing plant grade elevation 705 is 40 hours. The time to elevation 703, which allows a margin for wind wave considerations, is 35 hours. The event producing the next shortest time interval to elevation 703 involves the SSE failure of Norris, Cherokee, and Douglas during the 25-year flood resulting in a time interval of 63 hours.

The warning system utilizes TVA's flood forecast system to identify when flood conditions will be such that seismic failure of critical dams could cause a flood wave to exceed elevation 703 at the plant site.

Two levels of warning will be provided: (1) an early warning will be issued to SQN whenever a dam failure has occurred or is imminent for any single critical dam; or it appears from rain and flood forecasts that a critical situation may develop and (2) a flood warning or alert to begin preparation for plant shutdown when a critical situation exists that will result in the flood level to exceeding plant grade. A Stage I flood warning is declared once failure of critical dams has been confirmed and flood conditions are such that the flood surge will exceed plant grade. It shall be issued at least 27 hours before the flood level exceeds elevation 703 at the site. A Stage II flood warning will be issued at least 17 hours before the flood level exceeds elevation 703 at the site. Communication will be established and maintained during these two levels of warning to assure the 27 hour flood preparation period. Any prolonged interruption of communication or failure to confirm that a critical case has not occurred will result in the initiation of flood preparation at the plant site. The flood preparation shall continue until completion, unless communication is re-established and the site is notified that a critical case has not occurred.

Communications between the plant, dams, power system control center, and River Operations at Knoxville, Tennessee, are provided by microwave networks, fiber-optic network, radio networks, and commercial telephone service.

2.4A.10 References

1. SQN-DC-V-1.1, Design of Reinforced Concrete Structures Design Criteria

2. SQN-DC-V-12.1, Flood Protection Provisions Design Criteria

3. SQN-DC-V-43.0, High Pressure Fire Protection Water Supply System

TABLE 2.4A-2

CRITICAL CASES - SEISMIC CAUSED DAM FAILURES
TIME BETWEEN SEISMIC EVENT AND SELECTED PLANTSITE FLOOD ELEVATION

	Dam Failed	Time in Hours Between Event and Plantside Elevation 703	705
	One-half SSE failures with one-half probable maximum flood		
1.	Norris	(2)	(1)
2.	Cherokee-Douglas	(2)	(1)
3.	Fontana	(2)	46 (1)
4.	Fontana-Hiwassee-Apalachia-Blue Ridge	35	40
	SSE failures with 25-year flood		
5.	Norris-Cherokee-Douglas	63	70
6.	Norris-Douglas-Fort Loudoun-Tellico	(2)	(1)

(1) Elevation 705 not reached
(2) Elevation 703 not reached

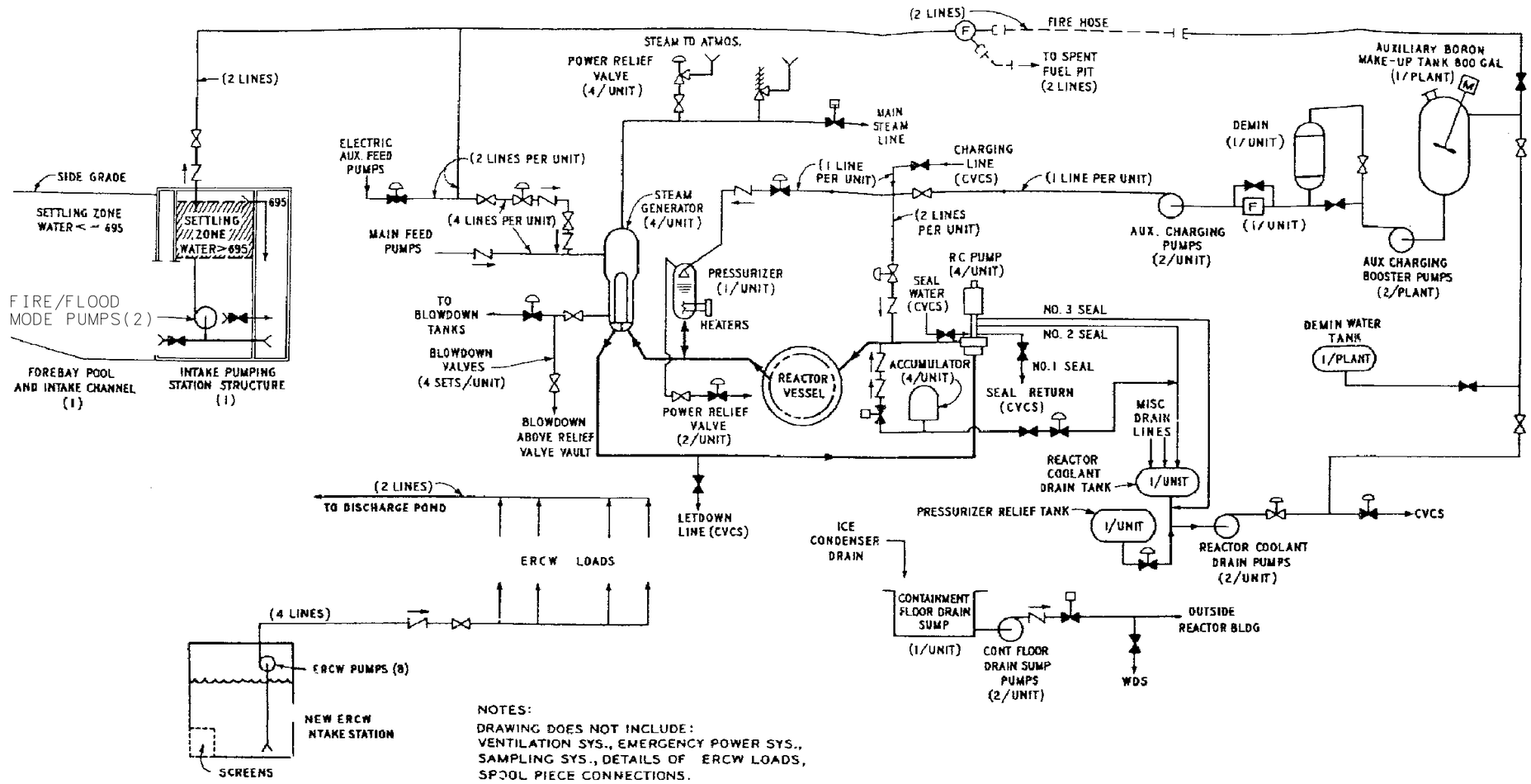

NOTES:
DRAWING DOES NOT INCLUDE:
VENTILATION SYS., EMERGENCY POWER SYS., SAMPLING SYS., DETAILS OF ERCW LOADS, SPOOL PIECE CONNECTIONS.

NOTES:
1. UNIT 1 SHOWN, UNIT 2 SIMILAR

SEQUOYAH NUCLEAR PLANT
FINAL SAFETY ANALYSIS REPORT

FIGURE 2.4A-2
FLOW DIAGRAM-FLOOD PROTECTION PROVISIONS WITH NEW ERCW INTAKE STATION IN OPERATION-NATURAL CONVECTION COOLING
(REVISED BY AMENDMENT 28)

CAD MAINTAINED DRAWING

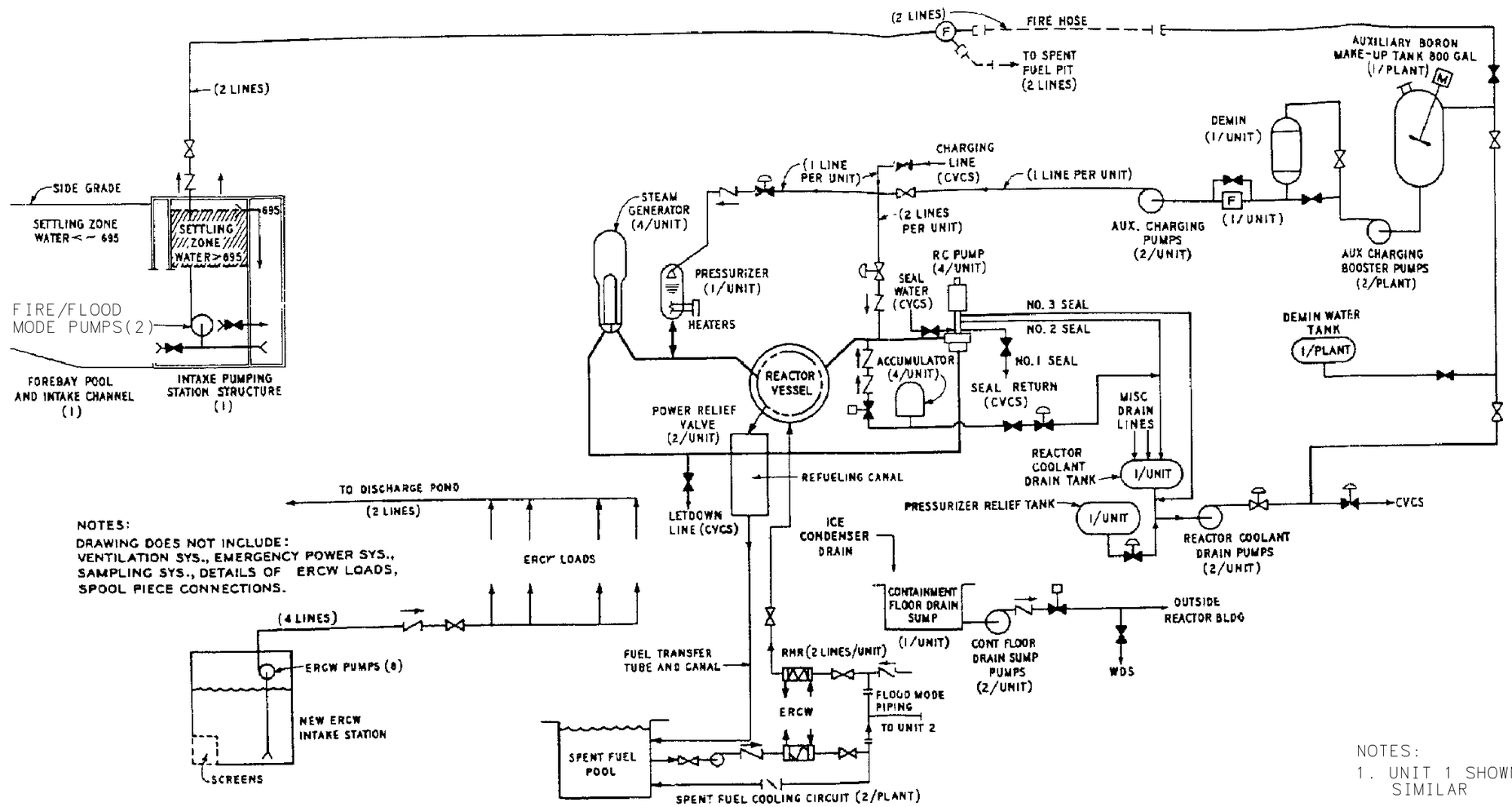

NOTES:
DRAWING DOES NOT INCLUDE:
VENTILATION SYS., EMERGENCY POWER SYS., SAMPLING SYS., DETAILS OF ERCW LOADS, SPOOL PIECE CONNECTIONS.

NOTES:
1. UNIT 1 SHOWN, UNIT 2 SIMILAR

SEQUOYAH NUCLEAR PLANT
FINAL SAFETY ANALYSIS REPORT

FIGURE 2.4A-3
FLOW DIAGRAM-FLOOD PROTECTION PROVISIONS WITH NEW ERCW INTAKE STATION IN OPERATION-OPEN REACTOR COOLING
(REVISED BY AMENDMENT 28)

CAD MAINTAINED DRAWING

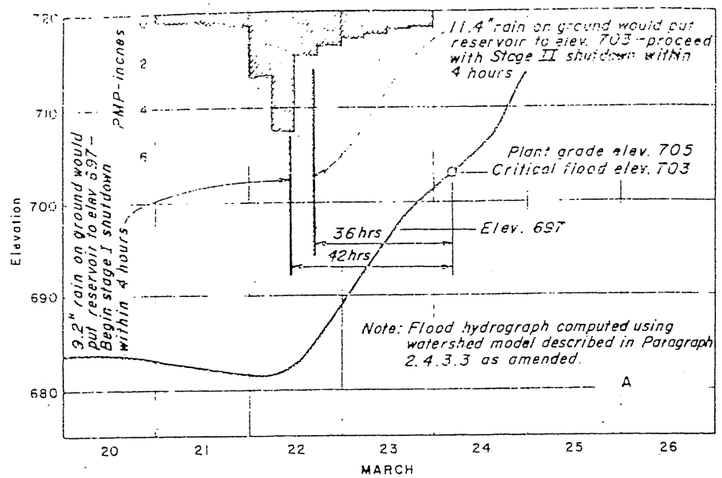

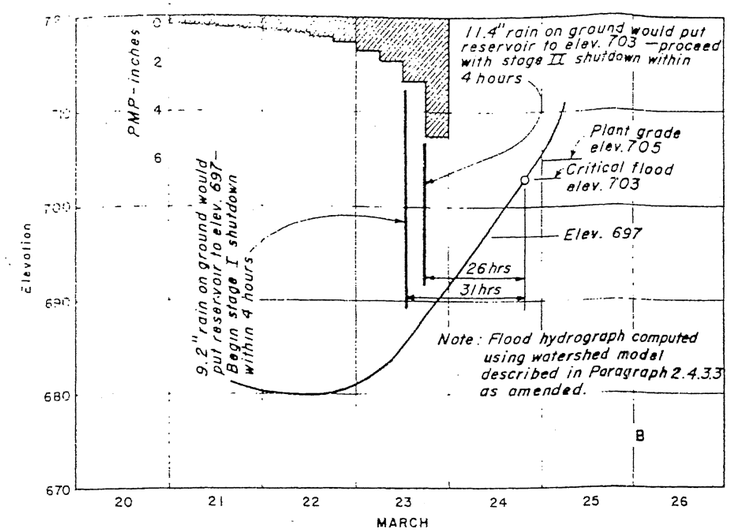

NOTE:
Times shown allow 4 hours for communications and forecast computation.

Histroical These graphs would be impacted by the safety modifications to the dam. But their use, as is, results in equal or greater flood proection.

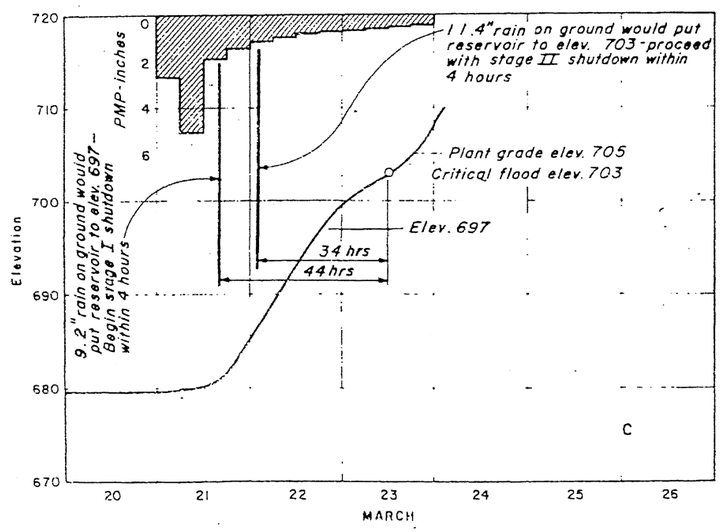

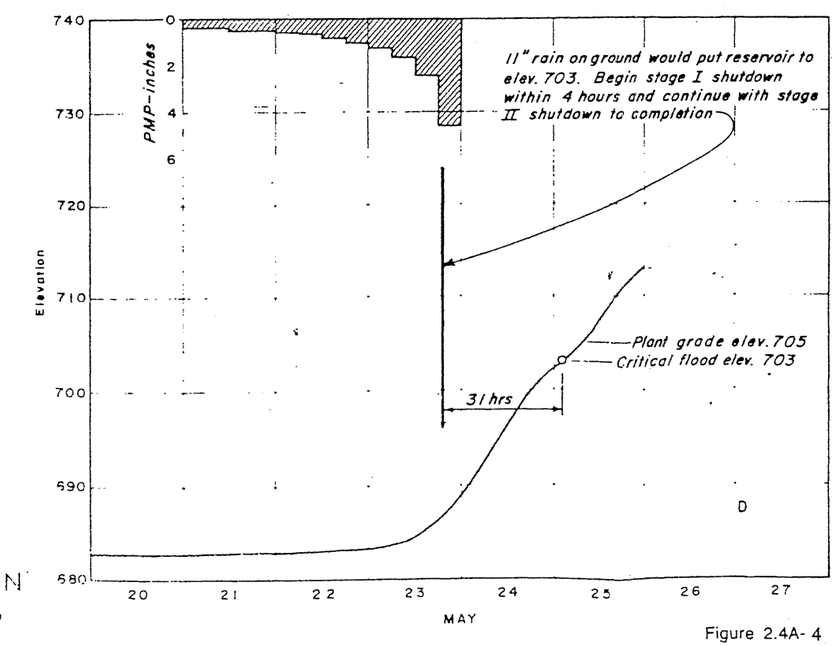

SEQUOYAH NUCLEAR PLANT FLOOD PROTECTION PLAN
BASIS FOR SAFE SHUTDOWN FOR PLANT FLOODING

Figure 2.4A- 4
HISTORICAL
Revised by Amendment 17

2.5 GEOLOGY AND SEISMOLOGY

2.5.1 Basic Geologic and Seismic Data

2.5.1.1 Site Location and Scope of Exploration

The Sequoyah plant site lies in Hamilton County, Tennessee, on a peninsula extending from the right shore into Chickamauga Lake between river miles 484 and 485 (Figure 2.5.1-1).

The site first was explored in 1953. Twenty-nine holes were drilled into rock while 17 were fishtailed to the top of sound rock.

From September 1968 to February 1969 additional holes were drilled to fill in a 100-foot grid in the control and auxiliary building area, and in the reactor areas, with holes drilled at the intake structure and other locations in the general plant area. In addition to obtaining information on the foundation conditions, the holes in the reactor areas were used for dynamic seismic investigations.

During September and October 1969 a third drilling program was carried out to further investigate the reactor, control and auxiliary areas on a 50-foot spacing, and to examine the condition of the Kingston fault northwest of the plant site. For further details see ref. 84.

2.5.1.2 Physiography

The Sequoyah site is located in the Appalachian Valley subregion of the Valley and Ridge Province of the Appalachian Highlands (Figure 2.5.1-1). Physiographically, this subregion is characterized by long narrow ridges and somewhat broader intervening valleys having a northeast-southwest trend. The ridges are roughly parallel and fairly evenly topped. They are developed in areas underlain by resistant sandstones and the more siliceous limestones and dolomites. The valleys have been excavated in the areas underlain by easily weathered shales and the more soluble limestone formations.

In the vicinity of the Sequoyah site, the Tennessee River, prior to the impoundment of Chickamauga Lake, had entrenched its course to elevation 640. The small tributary Valley floors slope from the river up to around elevation 800, while the crests of the intervening ridges range between 900 and 1000 feet in elevation.

2.5.1.3 Geologic History

The Sequoyah area lies near the western border of what was the active part of the Appalachian geosyncline during most of the Paleozoic era. During this time, the area was below sea level and more than 20,000 feet of sedimentary rocks were deposited. At the end of the Paleozoic era, some 250,000,000 years ago, the area was uplifted and subjected to compressive forces acting from the southeast. Folds developed which were compressed tightly, overturned to the northwest, and finally broken by thrust faults along their axial planes. The resultant structure, there- fore, is characterized by a series of overlapping linear fault blocks which dip to the southeast. Since this period of uplift, the area apparently has been above sea level and has been subjected to numerous cycles of erosion. This erosion accentuated the underlying geologic structure by differential weathering of the more resistant and less resistant strata resulting in the development of parallel ridges and valleys which are characteristic of the region.

2.5.1.4 Stratigraphy

Conasauga Formation

The bedrock at the site is the Conasauga formation of Middle Cambrian age. In this region, the Conasauga is composed of interbedded limestone and shale in varying proportions. The shale, where fresh and unweathered, is dark gray, banded, and somewhat fissile in character. The limestone is predominantly light gray, medium grained to coarse crystalline to oolitic, with many shaly partings. A statistical analysis of the cores obtained from the site area indicates a ratio of 56 percent shale to 44 percent limestone. Farther to the southeast, higher in the geologic section, the amount of limestone increases in exposures along the shore of the lake.

2.5.1.5 Structure

The controlling features of the geologic structure at the Sequoyah plant site are the Kingston Thrust fault and a major overturned anticline which resulted from the movement along the fault. This fault lies about a mile northwest of the plant site (Figure 2.5.1-2) and can be traced for 75 miles northeastward and 70 miles southwestward. The fault dips to the southeast, under the plant site, and along it steeply dipping beds of the Knox dolomite have been thrust over gently dipping strata of the Chickamauga limestone. The distance from the plant site, about one mile, and the dip of the fault, 30 degrees or more, will carry the plane of the fault at least 2000 feet below the surface at the plant site.

The major overturned anticline results in the Conasauga formation at the plant site resting upon the underlying Knox dolomite which normally overlies it (Figure 2.5.1-3). As a result of the ancient structural movement of the fault and major fold, the Conasauga formation at the plant site is highly folded, complexly contorted, and cut by many very small subsidiary faults and shears. The general strike of these beds are N 30 degrees E and the overall dip is to the southeast, but the many small tightly folded, steeply pitching anticlines and synclines result in many local variations to the normal trend.

In some of the drill cores, small faults and shears were noted intersecting the bedding at various angles. These dislocations are the result of shearing along the limbs of the minor folds which developed contemporaneously with the major movement along the Kingston fault.

The Kingston fault is only one of the several lengthy thrust faults which characterize the geologic structure of the Appalachian Valley, a part of the "Valley and Ridge" physiographic province. A study of any one of these faults involves a consideration of the major structural features of the Valley as a whole.

Structurally, the Appalachian Valley in eastern Tennessee is characterized very largely by a series of overlapping linear fault blocks of northeast-southwest strike and southeast dips.

Most studies have attributed the deformation in the Southern Appalachians to the Appalachian orogeny at the end of the Paleozoic era. It has been assumed that the major tectonic structures have been inactive since the cessation of the orogenic movement. The duration of this orogenic epoch cannot be determined precisely in the Southern Appalachians since the Pennsylvanian strata are the youngest rocks known to have been affected. That some deformation continued after the major faults had attained their present development is attested by folded and faulted thrust sheets. These late structures may represent the final phase of the orogeny.

The only undeformed materials occurring in the Valley as mappable units are the unconsolidated materials: alluvial deposits, including the high level terrace deposits as well as the recent floodplain alluvium, and the residuum that nearly everywhere mantles bedrock. The alluvium along the Tennessee River and its tributaries ranges in age from less than a decade at the top up to several tens of thousand years at the base. The higher terrace deposits are much older than the lower terraces. The high level terraces have been considered as Pleistocene (King, 1949, page 89) or even older.

The residuum which blankets the bedrock in the Appalachian Valley ranges in thickness from a feather's edge up to a maximum of a hundred feet or more. The age range within a thick accumulation of residuum has not been determined, but the oldest part of the residuum may be of Paleocene or even later Upper Cretaceous age. In several areas of the Valley, masses of bauxite occur in association with brown iron ores and lignite in the thick residuum over limestones and dolomites. The bauxite and the associated materials accumulated in the sinks or sink-like depressions. Bridge (1950, page 194) considers these deposits to be late Paleocene. The following quotation is from Rodgers: "The age of the residuum is even less definite. Weathering is going on and presumably some residuum is being formed now, yet some residuum was apparently already present when the bauxite-bearing clay bodies formed in their sinkholes." Thus it has probably been forming virtually throughout Cenozoic time, though perhaps at a greater rate at certain times, such as those of little stream erosion, than at others. Several lines of evidence suggest a time of particularly intensive chemical decay and activity during or after the formation of the "Valley Flood Peneplain" in the Appalachian Valley, perhaps in the earlier Cenozoic (King and others, 1944, pages 24-25, 59; Rogers, 1948, pages 15, 40; King, 1949, pages 82-83; Bridge, 1950).

As indicated above, the age of the various unconsolidated materials in the Appalachian Valley of eastern Tennessee can be at best only estimated in very general terms. The bedrock and its structures are concealed very largely by these materials. The lack of any evidence of faulting, creep, or renewed movement in the unconsolidated materials even along the major tectonic faults indicates that there has been no movement along these faults for a very long time. This is true of the Kingston fault and all of the other numerous faults in the area.

No formal trenching or age dating was attempted at the Sequoyah plant. The evidence previously cited is related to general observations and the field mapping experience of dozens of geologists for the past 100 years. None of the reports published by geologists working in east Tennessee mention any evidence of actual observations of displacement of surface features which relate to fault movement in historic time. More positive evidence comes from a branch of the Kingston fault called the Missionary Ridge Fault.

The Missionary Ridge fault is a branch, or subsidiary, fault of the Kingston fault (Rodgers 1953, page 130-131, Plate 15, Figure 10). It runs northwest from the Kingston fault and has a total length of approximately 25 miles extending southwestward from the point where it diverges from the Kingston fault, 3 miles southwest of the Sequoyah site, and dying out in northwest Georgia (Hardeman, 1966; Butts and Gildersleeve, 1948). Along most of its length Cambro-Ordovician Knox dolomite and limestone are thrust over Middle and Upper Ordovician Chickamauga limestone. Near its southern terminus Knox is thrust over the Silurian Red Mountain formation.

The Missionary Ridge fault crosses the Tennessee River just upstream from Chickamauga Dam. In 1848 a railroad tunnel was driven through Missionary Ridge in Chattanooga and in the process the tunnel crossed the Missionary Ridge fault. The lining of this tunnel was inspected in 1974 and no cracking of the lining, offset along joints, or other signs of structural defects were found that would indicate any evidence or movement along the Missionary Ridge fault in the last 125 years. Three other vehicular tunnels through Missionary Ridge were also inspected and no structural indications of possible fault movement were found.

TVA has drilled through some of the major faults in eastern Tennessee. Diamond core borings at Chickamauga Dam (1935-1936) went through the Missionary Ridge fault and the cores through the fault zone came out unbroken. The fault was not simply "healed" or recemented with secondary deposits of calcite or dolomite, but was a very tight contact along which apparently pulverized material had recrystallized.

The recrystallization and solidification of the material along the fault plane indicated that this material had not been disturbed by renewed movements for an unknown, but apparently very long, period. Until recently, no indication of how long a period since the last movement was available. In studies for the Clinch River Breeder Reactor Plant, Law Engineering obtained similar material from the Copper Creek fault, one of the same family of faults as the Kingston and Missionary Ridge faults in east Tennessee, and obtained radiometric dates of 280 to 290 million years, ± 10 million years. The results of these tests indicate that the last movements on these faults occurred during the late Paleozoic.

Core borings have been made through at least one other major thrust fault in eastern Tennessee. It was reported to be "solid" similar to that through the Missionary Ridge fault.

Although light earthquakes occasionally occur in the Valley of eastern Tennessee, there has not been a single instance in which the surface was deformed. The shocks are of "normal" focus, 15 to 20 km, but even at such shallow depths, the hypocenters are in the crystalline basement rock well below the sedimentary rocks.

As previously stated, a study of any one of our major thrust faults involves a consideration of all the other similar faults. Many of the geologists who have spent years doing geologic work in eastern Tennessee believe that the several named faults are merely branches of a single nearly flat sole fault developed in some relatively incompetent formation just above the crystalline basement. Some, if not all, of the thrust sheets flatten out with depth, and some of them are cut through by erosion.

It was not until early 1974 that definitive evidence was released to support the "thin-skinned" hypothesis. At that time Geophysical Services Incorporated published an advertising brochure describing reflection seismic data they had available for sale. The example of a reflection profile used in their brochure was made along U.S. Highway 70 from near Kingston, Tennessee, to the vicinity of Knoxville, Tennessee. This profile essentially at right angles to the regional strike is reproduced in Figure 2.5.1-4.

The vertical scale of this profile is represented in seconds. This indicates the double travel time necessary for the shock wave to descend to the reflector and return to the surface. Assuming a

wave velocity of 20,000 ft/s, the times indicated equate to depths in thousands of feet. The "thin-skinned" tectonic structure of the upper strata, above the 1.5 second (15,000 foot) line, is clearly indicated. The depth of approximately 15,000 feet to basement strata in this area is confirmed by gravity and magnetic data (Watkins, 1964).

The significance of the confirmation of "thin-skinned" tectonics in the area in relation to the geologic and seismic considerations of the Sequoyah plant lies in the fact that data now exist to show the separation of faults cropping out at the surface from geologic structures in the basement at a depth of approximately 15,000 feet or 4.5 km. This means that earthquakes with hypocenters at depths of five or more kilometers cannot be associated with faults cropping out at the surface even though the epicenter (surface projection of the hypocenter) falls on or near the trace of the fault.

The evidence available from all of the geologic studies that have been made suggests that all of the Appalachian Valley faults, including the Kingston fault, are inactive. In the voluminous literature on the geologic structure of the Southern Appalachians, there is no mention of the possibility that any of the faults may still be potentially active.

2.5.1.6 Groundwater

See Section 2.4.13.

2.5.1.7 Physical Character of the Rocks

Unconfined compressive strength determinations were made on seven core samples from the Sequoyah site. The results of these tests gave compressive strengths varying from 16,794 lb/in^2 and 11,936 lb/in^2 for limestone and 5758 lb/in^2 for shale. Seismic methods were used to determine the dynamic moduli of the foundation. The results of this work are explained below.

Seismic measurements were made in boreholes located in the two proposed reactor foundations. The purpose of these measurements was to determine the dynamic modulus of elasticity, E, for these foundations so that an earthquake design criteria could be established. Laboratory velocity measurements of core samples were not made because the varying changes in rock types would not give valid results.

The bedrock in which the seismic measurements were made is the Conasauga formation of middle Cambrian age. It is composed of inter-bedded lime- stone and shale in varying proportions. The shale, when unweathered, is dark gray to green, and somewhat fissile in character. In its weathered state it is very soft and in some cases has some of the characteristics of clay. The limestone is predominantly light gray, medium to coarse crystalline, oolitic, with many shaly partings and calcite healed fractures. The rock is badly contorted with dips ranging from 5 degrees to 90 degrees.

Results of the Dynamic Testing Program

Tables 2.5.1-1 and 2.5.1-2 give the results of the seismic studies that were made for each of the two reactor foundations. The average density of the rock is approximately 170 lb/ft^3. Density values from representative core samples were established at 170 lb/ft^3 and 169 lb/ft^3.

Tables 2.5.1-1 and 2.5.1-2 give the up-hole and cross-hole velocity measurements by which the E was calculated from formulae shown on Table 2.5.1-3. The difference in the values is thought to be attributed primarily to the changes in dip and rock type for each borehole. The average up-hole modulus for both reactor foundations is 4.2 x 10E6 and for the cross-hole modulus it is 4.4 x 10E6 lb/in^2.

2.5.1.8 Foundation Conditions

As shown on Figures 2.5.1-5 through 2.5.1-8, bedrock was mantled by a varying thickness of residual material derived from the weathering of the underlying shale and limestone. As would be expected in a foundation composed of alternating strata of different composition and competency, the configuration of the bedrock surface was irregular. The strike of the rock strata is approximately parallel to the centerline of the reactors. Preliminary excavation down to 18 inches above design grade resulted in a series of alternating ridges of harder limestone separated by troughs underlain by the softer shale trending across the plant area. The last 18 inches were removed by careful and controlled means so as to limit breakage below the design grade to a minimum. Once foundation grade was reached, the area was carefully cleaned and then inspected jointly by engineers and geologists to determine what, if any, additional material needed to be removed because of weathering or shattering by blasting.

After the final excavation was approved, the area was covered either by a coating of thick grout or a fill pour of concrete to prevent breakdown of the shale interbeds due to prolonged exposure.

Observation of rock exposed in the foundation areas, examination of cores, and investigations of the walls of exploratory holes with a borehole television camera all indicated that solution cavities or caves are not a major problem in the foundation. Verified cavities generally were limited to the upper few feet or rock where solution developed in limestone beds near the overburden-rock interface. Practically all of this zone was above design grade and was removed. Inspection of other areas of nonrecovery of core at greater depths by the borehole television equipment proved that so-called cavities as reported by the drillers were in fact interbeds of shale that had been ground between overlying and underlying harder limestone strata. In the walls of the holes the camera showed solid shale in these nonrecovery areas. Large solution cavities are not to be expected in formations such as the Conasauga which are made up of interbedded limestone and shale. The insolubility of the shale precludes the development of large openings.

Inspection of the walls of the exploratory holes with television disclosed thin, less than 0.05 foot, near-horizontal openings in some of the limestone beds. At the corresponding position, the drill cores showed unweathered breaks. These open partings are interpreted as "relief joints" developed by unloading either from erosion or excavation. The majority were found in the upper few feet of rock, but some were observed as deep as 131 feet below the rock surface.

A consolidation grouting program was carried on from February 18, 1970 through June 15, 1970 in the foundation areas for the Reactor, Auxiliary, and Control Buildings at the Sequoyah Nuclear Plant. The extent of the area treated is shown on Figures 2.5.1-9 and 2.5.1-10.

The purpose of this program was twofold. The first was to consolidate near-surface fractures predominantly caused by blasting and excavation. The second was to treat any localized open joints, bedding planes, fractures, or isolated small cavities that pre-construction exploratory drilling indicated might be present to a depth of 45 feet below the design foundation grade.

In the excavated area the contact between the residual material and essentially unweathered rock occurs at an average elevation of 680. The highest design level for the plant foundation grade under the Class I structures is at elevation 665. As a result, the preliminary excavation averaged a minimum of 15 feet in rock. Over most of the area the rock was suitable for foundation purposes at elevation 665.

In two areas, however, additional rock had to be excavated to remove localized pockets of deeper weathering. These zones were confined in two synclinal areas which crossed the excavation parallel with the north- south baseline. The axis of one lies approximately 70 feet plant east of the baseline and the axis of the other is approximately 140 feet plant west of the baseline. These trough-like synclines had channeled ground- water movement toward and along their axes with the result that weathering had progressed deeper in these areas. Generally, less than 10 feet of additional rock had to be removed from the synclinal zones to obtain a satisfactory foundation; however, in the vicinity of W 140; S 220, on the south side of the Auxiliary Building, as much as 30 feet of weathered rock was removed. The limits of the synclinal areas are reflected on Figure 2.5.1-10 as zones of appreciable grout take. Elsewhere in the foundation area grout takes were minimal.

This treatment program was approached in the same manner as a consolidation grouting program under a major dam. Grout crews with experience in grouting dam foundations were used, and the onsite technical direction of the program was performed by a member of the Geologic Branch who had previously supervised grouting operations at major dams. All grouting was done in strict accordance with TVA specification G-26, Pressure Grouting of Rock Foundations with Portland Cement. While the grouting was in progress, the program was reviewed in the field at least weekly by a senior member of the Geologic Branch.

Prior to the start of any grouting, it was proposed to excavate the foundation area to be treated to a depth of two feet below required design grade. In practice, due to the irregularities of the rock foundation, this overexcavation varied from a minimum of 18 inches to a maximum of nearly 30 feet. As each section of the foundation was prepared, it was inspected and approved by a joint team consisting of representatives of the Division of Construction, the Division of Engineering Design, and the Geologic Branch. When the area was released by the inspection team, fill concrete was poured up to the design foundation grade. This fill pour acted as a grout cap, protected the shale strata in the bedrock from any tendency to slake or ravel due to prolonged exposure, and provided a good working surface for the grouting operations.

The data contained in columns 3 and 5 of Table 2.5.1-4 indicate the tightness of the foundation. As shown in column 3, in the primary holes--those drilled over the entire area on a 20-foot grid--only 11 percent of the 10-foot-deep holes and 23 percent of the 45-foot-deep holes accepted any grout. This confirms the assumption made from the evaluation of the exploratory drilling, that grout takes would be confined to localized areas. Further confirmation is supplied by the relatively low percentage of holes with grout takes in the subsequent series of split

spaced holes. Normally, it would be expected that a high percentage of the split-spaced holes, especially the secondary holes, would accept grout because they were drilled in areas shown by the primary holes to require further treatment. Although these percentages were higher than for the primary holes, they never exceeded 50 percent and usually were less than 40 percent.

A layout of the investigative programs for the other category I structures is presented as Figure 2.5.1-11.

Sections of Category I structures supported on soil, piles, or caissons are provided on Figures 2.5.1-12,-12a, and -12b. The ERCW piping and conduit support slab which is founded on piles to rock is shown in section on FSAR Figure 3.8.4-9. The sections show general details of excavation and backfill limits for the Category I structures as well as the type of foundation. The classifications of borrow materials are discussed in Subsection 2.5.1.11.

The Sequoyah foundation was completed prior to the time Atomic Energy Commission (AEC) began requesting commitments to produce geologic maps of the foundation. Therefore, detailed data such as were presented for the Watts Bar Nuclear Plant are not available.

There are available several hundred photographs of the rock foundation. TVA has submitted by letter a series of photographs which give the best representation of the overall foundation. In addition to the photographs, quality assurance forms were included which indicate approval of rock conditions prior to all concrete subpours in the Reactor, Auxiliary, and Control Building areas. Rock inspections were made by a senior geologist and by senior design engineers who initiated the forms.

2.5.1.9 Physical Characteristics of Soils

2.5.1.9.1 Static Physical Characteristics of Soils

A soils exploration program was conducted at the plant site to determine the static physical characteristics of the soils. Standard penetration split-spoon borings and undisturbed borings were made. Figure 2.5.1-13 shows the location of all borings made at the site for in situ soil sampling and testing. Graphic logs of all borings are kept on file by TVA.

2.5.1.9.2 Dynamic Characteristics of Soils

In situ soil dynamic studies were made at the plant site to obtain data for computation of elastic moduli for earthquake design criteria. The areas investigated at the site were the Diesel Generator Building, the Low Level Radwaste Storage Facilities, the ERCW pipeline, the Additional Diesel Generator Building, and the Primary Water Storage Tank.

1. Diesel Generator Building

   Down-hole seismic surveys and a seismic refraction survey were performed. The results are tabulated on Table 2.5.1-9.

2. Low Level Radwaste Storage Facilities

Both compressional and shear wave velocities were obtained through a series of cross-hole and down-hole measurements. The results are tabulated on Table 2.5.1-10 and 2.5.1-11.

3. Essential Raw Cooling Water Pipeline

Down-hole seismic surveys were made. The results are tabulated on Table 2.5.1-12.

4. Additional Diesel Generator Building

Cross-hole and down-hole seismic surveys were performed. The results are tabulated on Table 2.5.1-13.

5. Primary Refueling Water Tanks

Seismic refraction surveys were made. The results are tabulated on Table 2.5.1-14.

2.5.1.10 Detailed Safety-Related Criteria and Computed Factors of Safety For the Materials Underlying the Foundations for Category I Structures

1. Category I Rock-Supported Structures

The allowable rock-bearing pressure for sustained loading was determined based on the strength and stratigraphy of the foundation rock. The result using the physical characteristics of the foundation rock as described in section 2.5.1.7, and the geologic characteristics given in section 2.5.1.4 provided a reasonable bearing pressure. The allowable rock-bearing capacity is less than the ultimate bearing capacity by a factor of 2.5.

Table 2.5.1-5 lists the structures which are constructed with a base slab directly on rock. The table shows the allowable static and dynamic bearing pressures.

2. Category I Structures Supported by H-Piles or Caissons to Rock

There are four Category I structures founded on piles or caissons. The structures are the East Steam Valve Room, the Waste Packaging Area, the Condensate Demineralizer Waste Evaporator Building, and the ERCW piping and conduit support slab in the ERCW pumping station access dike.The East Steam Valve Rooms were backfitted with caissons into rock after experiencing some settlement.

The Waste Packaging Area, the Condensate Demineralizer Waste Evaporator Building, and the ERCW piping and conduit support slab in the ERCW pumping station access dike are all supported on H-piles founded on rock.

3. Category I Soil-Supported Structures

The allowable soil-bearing capacity for sustained loading is determined using the general shear failure formula, developed by Terzaghi and modified by Meyerhof.

The allowable bearing pressure for sustained loads is less than the ultimate bearing by at least a factor of three.

For dynamic loading the soil-bearing pressure is permitted to exceed the allowable for sustained loading. In no instance is the ratio of the ultimate soil-bearing pressure to the allowable soil pressure less than two.

Table 2.5.1-6 contains a summary of the allowable soil-bearing capacities and factors of safety for the soil-supported Category I structures.

4. Category I Embankments

See Subsection 2.5.6.

2.5.1.11 Compaction Criteria for Engineering Backfill

2.5.1.11.1 Earthfill

Prior to and during construction, borrow investigations were made. These investigations were made on an as needed basis.

The borrow samples were tested by the central materials laboratory according to ASTM D-698 to develop compaction control curves. The compaction curves were divided into subclasses, and these compaction curves are shown on Figures 2.5.1-14 and -15. These curves were used by the project laboratory to control compaction of earthfill at the site.

At Sequoyah Nuclear Plant, Type A backfill was placed around all Category I structures. This material, which was selected earth placed in not more than 6-inch layers, has a minimum required compaction of 95 percent of the maximum dry density at optimum moisture content.

The limits of excavation and the backfill around the Category I structures are shown in Figures 2.5.1-12,-12a, and -12b. Tables 2.5.1-7 and 2.5.1-8 are a summary of field control tests on Type A backfill.

2.5.1.11.2 Granular Fill

Crushed Stone Fill

A free draining granular fill material, consisting of crushed stone or sand and gravel, was placed below or next to Category I structures. This material was obtained commercially from off-site sources.

The granular fill was suitable for compaction to a dense, stable mass and consisted of sound, durable particles which are graded within the following limits:

	Percent by Weight	
Passing	Minimum	Maximum
1-1/4-inch sieve		100
1-inch sieve	95	100

Passing	Percent by Weight Minimum	Maximum
3/4-inch sieve	70	100
3/8-inch sieve	50	85
No. 4 sieve	33	65
No. 10 sieve	20	45
No. 40 sieve	8	25
No. 200 sieve	0	10

The material was free of disintegrated stone, soft friable particles, shale, salt, alkali, organic matter, or an adherent coating and reasonably free of thin, flat, or elongated pieces.

The granular fill material was used; for structural support, to replace earthfill as a backfill material around piping or conduits during wet weather, and to provide a working base above wet soil. The material, when used for structural support, or replacement for earthfill, was compacted to a required relative density as determined by ASTM D 2049. When used for structural support, such as for the refueling water storage tank (Figure 2.5.1-12b), an average relative density of 85 percent or greater with a minimum relative density of 80 was required. When used as a replacement for earthfill, a relative density between 70 and 85 percent was required.

Limestone Sand Fill

A granular fill material that meets the gradation requirements of ASTM C 33 was used as backfill material around the ERCW piping along the piping alignment from the intake Pumping Station to the ERCW Pumping Station access dike. The gradation limits for the material are:

Passing	Percent by Weight Minimum	Maximum
3/8" sieve	100	
No. 4 sieve	95	100
No. 8 sieve	80	100
No. 16 sieve	50	85
No. 30 sieve	25	60
No. 50 sieve	10	30
No. 100 sieve	2	10

The granular fill was compacted to an average relative density of 75 percent or greater, with a minimum relative density of 70 percent as determined by ASTM D 2049.

2.5.1.11.3 Crushed Rock

A crushed rock material that meets the gradation requirements shown below was used to

construct the core of the ERCW access dike and the material was also used for remedial treatment in local areas. The gradation limits for the material are:

Passing	Percent by Weight	
	Minimum	Maximum
3-inch sieve	95	100
2-inch sieve	25	55
1-1/2-inch sieve	0	15
1-inch sieve	0	2

The material consisted of sound durable particles; free of soft friable particles, shale, salt, organic matter, or an adherent coating (other than dust); and reasonably free of thin, flat or elongated pieces.

ERCW Access Dike

The ERCW Access Dike as shown on Figure 3.8.4-9 connects the ERCW Pumping Station Access Cells with the shore. The dike core was placed by end dumping the rockfill material between the shore and the access cells up to elevation 676.75 (1.75 feet above normal minimum reservoir level). Compaction was obtained using a vibratory roller. Above elevation 676.75, between the access cells and the shore, the rockfill material was placed in lifts and compacted using the same vibrating roller.

Remedial Treatment

The rockfill material was used in several locations at the site to improve the soil. This was generally done where moisture caused the soil to be unsatisfactory as a base for earthfill placement. The material was used in a limited area at the refueling water tank pipe tunnel.

The material was placed in approximate 6-inch loose layers and rolled into the soil. If the required stiffness for the placement of earthfill was achieved, lifts of earth- fill or crushed stone fill were placed. If the required stiffness was not achieved, then additional lifts of the material were placed and rolled to obtain the desired stiffness. If shearing or pumping accurred in placement of the first lift, additional lifts of the material were placed as necessary.

2.5.2 Vibratory Ground Motion

The lithologic, stratigraphic, and structural conditions at the site and in the surrounding area and the geologic history of the region have been discussed previously in Paragraphs 2.5.1.3, 2.5.1.4, and 2.5.1.5, and will not be repeated here. The static and dynamic engineering properties of the materials underlying the site are described in Paragraphs 2.5.1.7 through 2.5.1.9.

2.5.2.1 Regional Tectonics

The fact that Pennsylvanian strata were involved in the deformation of the Valley and Ridge province in the Southern Appalachian area has in the past been taken as conclusive evidence that the structural features of the Appalachian system were formed near the end of the Paleozoic

Era. This has been termed the "Appalachian Revolution." This late Paleozoic orogeny, however, may have been only one of many movements, and in fact may have been a relatively mild concluding phase.

The orogenic and tectonic history of the southern Appalachian geosyncline is composite. The lower part, up to about the middle of the Ordovician, is a thick mass of carbonates with sandstone at the base. These deposits indicate a time of crustal quiescence, with slow sinking of the area of deposition, and low marginal lands. The succeeding clastics, laid down in Middle Ordovician and later times, express a radical change in the environment of the geosyncline. The source of the sediments was now from the southeast and was probably orogenic in origin.

In the southern Appalachians, the first orogenic movement indicated by the sediments of the geosyncline took place in Middle Ordovician time. This is somewhat earlier than the late Ordovician and early Silurian Taconian movements of the northern Appalachians, but may be considered a phase of the Taconian orogeny. To the southeast is a thick mass of shales and sandstones of Middle Ordovician Age, succeeded by red sandstones and siltstones, probably also Middle Ordovician. Farther northwest, all the Middle Ordovician is limestone, but the Upper Ordovician includes shales and red beds. These beds are topped by cleanly washed, quartzose Silurian sandstones, a post-orogenic deposit.

Orogenic movements at about this time in the metamorphic and plutonic belt on the southeast are suggested by radioactive determinations which indicate that some of the pegmatites of that area are of Ordovician Age.

Acadian, or late Devonian and early Mississippian, orogeny of the northern Appalachians seems to be poorly represented in the southern Appalachians. Slight early Mississippian movements, possibly a late phase of the Acadian orogeny, are expressed by clastic rocks of early Mississippian Age. However, Middle Paleozoic time in the southern Appalachians seems to have been mainly one of quiescence and readjustment, following the Ordovician orogeny.

The next period of orogeny suggested by the sediments of the Valley and Ridge province probably took place in late Mississippian and early Pennsylvanian time, or at about the same time as the Wichita orogeny west of the Mississippi Embayment. Deposits of late Mississippian and early Pennsylvanian age thicken markedly southwestward along the Valley and Ridge province and reach their climax in the southeastern belts of outcrop in Alabama. If these thick late Mississippian and early Pennsylvanian deposits are related to orogeny, that orogeny must have occurred in the region southeast of the present belts of outcrop, for the deposits lie with apparent conformity on the beds beneath and share with them the strong folding and faulting of the Valley and Ridge province. No Paleozoic deposits younger than the Pottsville are present southwest of West Virginia and Kentucky. There may have been Arbuckle movements of late Pennsylvanian and early Permian age, and there may have been also Appalachian movements of late Permian age.

Since the end of the Paleozoic the southern Appalachian mountain system has stood as a positive area and has undergone profound erosion. The present topography is the result of differential weathering of strata of varying resistance. The more durable units underlie the higher areas and the valleys are cut in softer formations. This differential erosion in the Valley and

Ridge Province has accentuated the long northeast-southwest trending series of fault belts that developed in the Paleozoic and have remained quiescent since. The Valley and Ridge Province from Roanoke, Virginia, southwestward is characterized by a series of overlapping linear fault blocks of northeast-southwest strike and southeast dip. Along the southeast margin of the province the Lower Cambrian and Pre-Cambrian strata have moved northwestward along the Great Smoky fault as much as 20 to 30 mi. as evidenced by exposures of Upper Cambrian and Ordovician strata in windows eroded through the thrust plate far southeast of the present mountain front. While this was happening, the less competent strata to the northwest were shingled into a series of imbricate thrust plates. The soles of these plates are normally incompetent shales in or below the Middle Cambrian Rome formation. On the present surface as many as 10 of these sheets can be defined across the Valley and Ridge Province in Tennessee. Most geologists familiar with the area now believe that there are two to four "master thrusts," such as the Pulaski, Saltville, and Pine Mountain, and others are subsidiary branches off the major faults. It is also believed that these faults do not extend into the basement but are a series of decollements developed in some relatively incompetent formation above the crystalline basement.

There is no geologic evidence indicating that any of these faults could be considered to be "active" faults; that is, still undergoing movement. On the contrary, all geologic evidence points to the fact that they have not moved since the close of the Paleozoic era. Drainage patterns are controlled by the relative competency or incompetency of the strata crossed by the streams and do not indicate offsets where crossing faults.

There is no evidence of creep, faulting, or renewed movement in the unconsolidated residual or alluvial deposits overlying the fault traces nor any observable offset of Plio-Pleistocene high level alluvial terraces.

In exploration for various sites in the TVA area, some of these major fault planes have been intersected by exploratory drill holes. As an example, during the exploration for Chickamauga Dam near Chattanooga, Tennessee, cores across the Missionary Ridge fault were recovered unbroken. The fault was not simply "healed" or recemented with secondary deposits of calcite or dolomite, but was a very tight contact along which apparently pulverized material had recrystallized. In another instance at the Tellico Project near Knoxville, Tennessee, the Knoxville fault was cored in 10 holes and again the core across the fault was recovered unbroken although the stratigraphic displacement is in the neighborhood of 10,000 feet and the lateral displacement can be measured in miles. The evidence available from all of the geologic studies that have been made indicates that all of the thrusts in the Valley and Ridge Province are inactive. In the voluminous literature on the geologic structure of the southern Appalachians, there is no mention of the possibility that any of the faults may still be potentially active.

Although light earthquakes occasionally occur in the region, there has not been a single instance where the surface has been deformed. These shocks are all of "normal" focus, 15-20 km deep, but even at these relatively shallow depths the hypocenters are well into the crystalline basement rocks far below the 5 km maximum thickness of the sedimentary cover. For this reason, any map showing epicenters of earthquakes in this area plotted in relation to fault traces gives an erroneous impression, for any such map drawn to a reasonable scale will show some epicenters falling near or on some of the relatively closely spaced thrust faults to which they are in no way related.

2.5.2.2 Site Area Tectonics

In recognition of the fact that sites in the southern Appalachians cannot reasonably be tied to any one "tectonic structure," NRC (formally AEC) in the preliminary evaluation of the Sequoyah Nuclear Plant defined a "Southern Appalachian Tectonic Province." This province is bounded on the east by the western margin of the Piedmont Province; on the west by the western limits of the Cumberland Plateau; on the south by the overlap of the Gulf Coastal Plain Province; and on the north by the re-entrant in the Valley and Ridge Province near Roanoke, Virginia. The limits of the province are shown on Figure 2.5.2-1. Under this concept accelerations at the site will be determined by assuming that the largest historic earthquake known in the province occurred adjacent to the site. For the Sequoyah site, this earthquake would be the May 31, 1897 quake in Giles County, Virginia, which had a reported epicentral intensity of MM VIII.

In the specific site area there is no physical evidence of disturbance of surficial materials during prior earthquakes. Minor dislocations and shears in the substrata are directly related to movements along the major thrust faults which moved in the Paleozoic and have been "fossilized" since that time. The majority of these are healed and recemented although they do serve as loci for near-surface development of solution and cavities in the limestone strata.

2.5.2.3 Seismic History

The evaluation of the earthquake hazard at the Sequoyah site involves a consideration of the known seismic history of a large surrounding area. By plotting the epicenters of hundreds of earthquake shocks, the areas of continuing seismic activity become apparent. The more active areas are described in the following summary.

1. Mississippi Valley, especially the New Madrid region of Arkansas, Kentucky, Missouri, and Tennessee. This region has been active seismically since the appearance of the white man and very probably long before that. A few great earthquakes and thousands of light to moderately strong shocks have been centered in the Mississippi Valley. Light to moderate shocks are still occurring at an average frequency of a few per year. The New Madrid region is more than 250 miles northwest of the Sequoyah site.

2. The Lower Wabash Valley of Illinois and Indiana. This area has been the center of several moderately strong earthquakes, some of which were felt as far south as Nashville, Tennessee. It is about 260 miles northwest of the Sequoyah site.

3. Charleston area, South Carolina. One of the country's greatest earthquakes was centered in the Charleston area. Earlier, many light to moderate shocks had been centered in the area long before the great earthquake, and the activity has continued to the present time. Charleston is more than 300 miles east of the Sequoyah site.

4. The Appalachian Mountains of eastern Tennessee and western North Carolina. The mountain belt of eastern Tennessee and western North Carolina is a region of continuing minor activity. Light to moderate shocks occur at an average frequency of one or two per year. The activity is not uniform, as periods of several shocks per year are followed by longer periods of no perceptible shocks. This region is centered more than 50 miles to the east of the Sequoyah site.

In addition to these areas, shocks of light to moderate intensity have occurred at numerous other localities in the southeastern states at various distances from the Sequoyah site. At many of these localities, only a few light to moderate shocks from widely scattered epicenters are known. A few such shocks have occurred to the north and east of Huntsville, Alabama. Numerous light shocks have occurred in Knoxville and its environs.

An annotated list of the earthquakes which have either affected the Sequoyah area or were centered somewhere near the area is presented below. In each case, the maximum intensity, or that applicable to the Sequoyah area, is assessed in terms of the modified Mercalli scale.

1811, December 16:	36.6° N - 89.6° W
1812, January 23:	36.6° N - 89.6° W
1812, February 7:	36.6° N - 89.6° W

These were the strongest shocks of the great series of earthquakes of 1811-1812 centered in the Mississippi Valley and known collectively as the New Madrid earthquake. This series consisted of thousands of individual shocks, many of which were strong. The three strongest shocks had an intensity of XII in their epicentral areas, and were felt over an area of about 2,000,000 square miles. Topographic changes were effected over an area of 3000 to 5000 square miles in the Mississippi Valley. The three great shocks and many of the other strong shocks were felt in the Sequoyah area, where some of them may have attained intensities as high as VI or VII (Figure 2.5.2-2).

1843, January 4: 35.2° N - 90° W. A severe earthquake centered in the Mississippi Valley was felt over some 400,000 square miles in a 12-state area. Chimneys were thrown down in Memphis, Nashville, and St. Louis. Although the intensity was perhaps as high as in the epicentral area, it is not known to have attained damaging intensities in Alabama. This shock was perceptibly felt over the entire Tennessee Valley and may have had an intensity as high as V or VI in the Sequoyah area.

1861, August 31: A strong earthquake, thought to have been centered in Virginia, was felt from Washington, D.C., southward to Wilmington, North Carolina, and westward to Knoxville, Cincinnati, and Louisville. At Knoxville it was described as a "heavy shock" which "alarmed the encamped military very much." It may have affected the Sequoyah area at an intensity of III or IV.

1886, August 31: 32.9° N - 80.0° W. The great Charleston, South Carolina, earthquake was felt over the entire eastern U.S. Its maximum intensity in the epicentral area was X, but in eastern Tennessee it was perhaps between VI and VII, as shown on Figure 2.5.2-3.

1886, September 1: A shock reported at Chattanooga was believed to be an aftershock of the Charleston earthquake, many of which were felt in Tennessee.

1892, December 2: A very perceptible earthquake shock was felt in Chattanooga from Hill City (now north Chattanooga) to Missionary Ridge. According to contemporary reports, the motion was from north to south. Doors in houses flew open, piles of lumber were upset, coal at chutes rolled down, and water vibrated. These effects were reportedly limited to an area of 6.25 square miles, but a larger area probably was affected.

1895, October 31: 37.0° N - 89.4° W. A strong earthquake centered at Charleston, Missouri, affected an area of 1,000,000 square miles in 23 states. It threw down chimneys and damaged buildings at various places in the Mississippi Valley, including Memphis, Tennessee. The earthquake was felt over the entire Tennessee Valley, but it was of low intensity in eastern Tennessee.

1897, May 31: 37.3° N - 80.7° W. A strong earthquake centered in Giles County, Virginia, was felt over an area of more than 250,000 square miles. It was felt throughout eastern Tennessee as far west as Tullahoma, but did not attain damaging intensities outside the epicentral area.

1902, May 29: A "strong shock" (intensity V) shook houses and awakened sleepers in Chattanooga.

1902, October 18: 35.0° N - 85.3° W. A moderate shock affected some 1,500 square miles in Georgia and Tennessee. It was felt from Dalton to Chattanooga. The maximum intensity was IV-V, but it is not known to have been felt as far to the northeast as the Sequoyah plant site.

1904, March 4: 35.7° N - 83.5° W. The epicenter of this earthquake was between Maryville and Sevierville, but the disturbance was felt along the mountain front over a distance of 90 to 100 miles. The shock affected an area of about 5,000 square miles, but the intensity was nowhere above V and over much of the felt area it was much lower.

1913, April 17: 35.3° N - 84.2° W. This moderately strong earthquake was felt over an area of about 3,500 square miles in eastern Tennessee, western North Carolina, northern Georgia, and northwestern South Carolina. The intensity was higher (V-VI) along the major axis of the affected area between Ducktown and Kiser. As shown by the map (Figure 2.5.2-4), the earthquake was not felt in the Sequoyah area, but it was felt some miles away.

1913, May 2: A light shock of several seconds duration was felt near Madisonville, Tennessee. This shock, intensity III, was centered nearly 50 miles from the plant site.

1914, January 23: 35.60 N - 84.50 W. A sharp local shock (V) was felt at Niota and Sweetwater, some 35 miles from the plant site.

1916, February 21: 35.50 N - 82.50 W. The strong earthquake, intensity VII, was centered in the mountains of western North Carolina. It affected an area of 500,000 square miles in the Carolinas, Georgia, Tennessee, Alabama, Kentucky, and Virginia. It was felt over nearly all of Tennessee, but was most severe in the mountains of eastern Tennessee. Chimneys were damaged at Sevierville and plaster was shaken from walls at Bristol, Morristown, and Knoxville. At Memphis, there was considerable motion in the higher stories of buildings. The earthquake affected the Sequoyah area at intensities between III and IV (Figure 2.5.2-5).

1916, October 18: 33.50 N - 86.20 W. A strong earthquake centered near Easonville, Alabama, was felt over an area of 100,000 square miles in a seven-state area. About two-thirds of Tennessee was affected by this earthquake, but there was no damage in the state. The

disturbance was felt strongly at Chattanooga, Nashville, Waynesboro, Carthage, Sparta, McMinville, Lewisburg, and other points in central Tennessee. A light shock was noticed in Knoxville and Clinton. At the Sequoyah plant site, the intensity was not more than IV (Figure 2.5.2-6).

1918, June 21: 36.10 N - 84.10 W. Centered near Lenoir City, this moderate shock (IV-V) affected an area of 3000 square miles. It is not known to have affected the Sequoyah area.

1920, December 24: 36.00 N - 85.00 W. A moderately strong shock was felt at a number of localities in eastern Tennessee including Rockwood, Glen Alice, Spring City, Harriman, Decatur, and Crossville. Many sleepers were awakened and the entire village of Glen Alice was aroused. This earthquake, with a maximum intensity of V, was centered about 45 miles from the Sequoyah plant site and is not known to have affected the site area.

1921, December 15: An earthquake of "considerable intensity" was felt along the western portion of the Appalachian Valley from Kingston and Rockwood to Decatur and Dayton and as far eastward as Athens. The maximum intensity was V, but the shock is not known to have been felt any nearer to Sequoyah than Dayton.

1924, October 20: 35.0° N - 82.6° W. A strong earthquake (V-VI) centered in Pickens County, South Carolina, was felt over 56,000 square miles in the Carolinas, Georgia, Tennessee, Virginia, and Florida. Although buildings were strongly shaken in the epicentral area, there was little damage. The intensity in eastern Tennessee was nowhere greater than III. At the Sequoyah plant site, the intensity was less than II (Figure 2.5.2-7).

1927, October 8: A moderately strong earthquake was felt in all parts of Chattanooga and suburban areas, including north Chattanooga, East Ridge, Lookout Mountain, Signal Mountain, St. Elmo, and Red Bank. The shock was felt in small and large buildings. Lights trembled and loose objects were disturbed. Other mild shocks were reported within a few hours following this shock. The shock is not known to have been felt in the Sequoyah area.

1928, November 2: 35.8° N - 82.8° W. A strong earthquake centered in the mountains of Madison County, North Carolina, was felt over an area of 40,000 square miles in a six-State area. The maximum intensity was VII, but in Tennessee the intensity diminished from VI along the state line to extinction somewhere in central Tennessee. At the Sequoyah plant site, the intensity was less than III (Figure 2.5.2-8).

1930, August 30: 35.9° N - 84.4° W. This earthquake was felt at Kingston, Lenoir City, Lawnville, Oliver Springs, and other points west and southwest of Knoxville. The maximum intensity was V. This shock is not known to have affected the Sequoyah site area perceptibly.

1938, March 31: An earthquake centered in the mountains in the Little Tennessee Basin was widely felt in Tennessee and North Carolina. In Tennessee it was felt at Copperhill, Parksville, Knoxville, and Sweetwater where the intensities ranged from III to I. The shock is not known to have affected any part of Tennessee west of Sweetwater.

1940, October 19: An earthquake which shook houses and rattled loose objects awoke thousands of sleepers in Chattanooga. It affected some 1,100 square miles in Tennessee and Georgia. It was felt as far north as Charleston and Birchwood but at very low intensities (Figure 2.5.2-9).

1941, September 8: An earthquake was felt throughout Chattanooga and as far west as Jasper. It was especially strong in the Lookout Mountain area where walls vibrated, loose objects rattled, and glassware was broken. This earthquake is not known to have been felt upstream from Chattanooga.

1945, June 13: This shock, centered near Cleveland, Tennessee, where the intensity was V, was felt over an area of 4,000 square miles in southeastern Tennessee and northwestern Georgia. It was felt north-eastward to Knoxville, southwestward to Chattanooga, and southeastward to Blue Ridge, Georgia. The felt area of this shock was never mapped, but the shock may have affected the Sequoyah area at an intensity of III or less.

1946, April 6: Another light shock was felt at Cleveland, Tennessee. This shock was not reported felt outside of the city.

1947, December 27: A light earthquake (IV) felt in Chattanooga, Tennessee; and Fort Oglethorpe, Rossville, Ringgold, and Boynton, Georgia, affected an area of 300 miles. It was centered east of the Missionary Ridge fault, where houses shook, loose objects rattled and piano wires popped. The shock is not known to have been felt any nearer to Sequoyah than Chattanooga.

1954, January 22: A light earthquake was felt over much of McMinn County from Athens to Etowah and Englewood. It is not known to have been felt outside of the county.

1957, June 23: 35° 54' N - 84° 14' W. A light local earthquake was felt in western Knox County and nearby sections of Anderson and Loudon Counties. At Dixie Lee Junction and in neighboring communities, people were awakened by the "jumping" of houses and the rattling of loose objects.

1959, June 12: 35° 21' N - 84° 20' W. A light earthquake was felt over an area of 900 square miles in eastern Tennessee and western North Carolina. It was most strongly felt at Tellico Plains and Mount Vernon where an intensity of IV was attained.

1960, April 15: 35.8° N - 83.9° W. A shock of intensity V, centered near Knoxville, Tennessee, was felt over a 1,300 square mile area. It was not reported as felt in the Sequoyah area.

1966, August 24: 35.9° N - 83.9° W. This shock of intensity IV, centered near Knoxville, Tennessee, was not felt in the Sequoyah area.

1968, November 9: 38.0° N - 88.5° W. This earthquake, centered in southern Illinois, with an epicentral intensity of VII was felt over a 400,000 square mile area in 23 states, including Tennessee, and in Canada. In the Sequoyah area it had an approximate intensity between II and III.

1969, July 13: 36.1° N - 83.7° W. The epicenter of this intensity IV shock was located northeast of Knoxville, Tennessee. This shock was not felt in the Sequoyah area (Figure 2.5.2-10).

1969, November 20: 37.4° N - 81.0° W. This intensity V shock, with its epicenter in southern West Virginia, was not reported felt in the Sequoyah area.

1971, July 12: 35.9° N - 84.3°. A light local tremor (MM III-IV) was felt at 10:00 p.m. in the Knoxville-Oak Ridge area. It was not felt in the Sequoyah area.

A list of all seismic events to 1982 and within a 200-miles radius of the plant site is presented as Table 2.5.2-1.

The seismic history of the southeastern U.S. has been known for only about a century and a half, but so far as can be determined from the records the Sequoyah site is as stable seismically as any area in the State. Great distant earthquakes have affected the area with intensities equal to or greater than the maximum intensities of the several shocks centered within 50 or 60 miles of the site. Of the 40 earthquakes identified in the foregoing annotated list, only 12 are positively known to have been felt at Sequoyah. Of these, four were centered in the Mississippi Valley, one at Charleston, South Carolina, one in Alabama, one in Illinois, and five at various centers in east Tennessee, Virginia, and western North Carolina. In addition to these, it is probable that a few other shocks might have affected the area at very low intensities.

On Figure 2.5.2-1, epicenters of all historic quakes within 120 miles of the Sequoyah site and all epicenters of historic quakes with MM intensities of V or greater up to and beyond 250 miles from the site are plotted.

2.5.2.4 Site Seismic Evaluation

The known seismic history of the southeastern United States suggests that the earthquake hazard is negligible at the Sequoyah site. There are no active faults in the vicinity of the site and there is no physical evidence of any seismic activity at the site. There have been several shocks in the general area including two shocks of intensity MM V centered within 15 and 20 miles of the site. However, the nearest known epicenter of damaging intensity (MM VII) is 100 miles northeast of the site. The maximum intensity to have been felt at the site in the recorded history of the area is probably MM V and certainly no more than MM VI. On the basis of present knowledge, the maximum historic felt intensity was derived from major earthquakes centered at distant points, especially in the Mississippi Valley. There is continuing seismic activity in the Mississippi Valley and the possibility of another great earthquake in the New Madrid region cannot be discounted. An earthquake of intensity MM X to MM XII at New Madrid might be felt at Sequoyah with an intensity of MM V or MM VI.

There is no known correlation between earthquakes observed in the region and any surficial tectonic structures. The site lies in the Southern Appalachian tectonic province as defined during the preliminary evaluation of the Sequoyah Nuclear Plant site. This province is bounded on the east by the western edge of the Piedmont Province; on the west by the western limits of the Cumberland Plateau; on the south by the overlap of the Gulf Coastal Plain Province; and on The north by the re-entrant in the Valley and Ridge Province near Roanoke, Virginia (Figure 2.5.2-1).

The maximum historic quake reported in this province was assigned an intensity of MM VIII although there is reason to believe it should have been rated as MM VII. It occurred in Giles County, Virginia, in 1897. Although this earthquake occurred 285 miles northeast of the site, this intensity is assumed to occur at the site for the purpose of defining the Safe Shutdown Earthquake (SSE). The maximum acceleration for an intensity of this level is estimated to be 0.14 g. This peak acceleration has been estimated from empirical relationships which are based almost exclusively on data obtained on overburden and hence provide some margin of conservatism for a rock site (seismic site studies indicate a shear wave velocity of 7,000 ft/s).

Initially, it was felt the Housner spectrum for maximum top of rock acceleration of 0.14 g for the SSE best represented the historic seismic threat at the site, i.e., large shocks at long distances. This information was submitted to TVA's consultant (Weston Geophysical Research, Incorporated) for their review. TVA's consultant agreed that the maximum ground acceleration values were conservative but felt the Housner spectra did not give sufficient weight to the effect of close earthquakes. TVA's consultant recommended a spectrum reflecting more energy in the 5 to 10 Hz frequency range, and his recommendations were accepted by TVA. Another consultant was contracted to produce such a spectrum and a set of four artificial earthquake records whose average response would approximate this spectrum.

During the course of the Sequoyah PSAR review, a special meeting was called on November 13, 1969 to discuss earthquake design criteria. AEC structural and geological-seismological consultants for Sequoyah were present. At this meeting, AEC's geological-seismological consultants took the position that maximum top of rock accelerations should be 0.18 g for the SSE. AEC's structural consultants stated that 0.18 g coupled with a Housner spectrum would be considered satisfactory as a minimum design basis. TVA stated that it would use the arithmetically averaged response spectra generated by four artificial records previously mentioned after the high frequency end had been raised to coincide with the 0.18 g Housner spectra. The structural consultants agreed that if TVA wished to use these records, which give more conservative results, this would certainly be acceptable to them.

Accordingly, the plant is designed so that all structures, systems, and components important to safety will remain functional when subjected to an SSE having maximum horizontal acceleration of 0.18 g and maximum vertical ground acceleration of 0.12 g.

10 CFR Part 100, Appendix A, 1971, allowed the utilities to independently select the g-level for the Operating Basis Earthquake (OBE). Accordingly, TVA selected 0.00g as the OBE. The regulations required, however, the establishment of a "1/2 SSE" which was based on a g-level of 1/2 of the SSE. The 1/2 SSE for Sequoyah was therefore 0.09g (i.e., 1/2 of the 0.18g maximum horizontal ground acceleration).

The seismic design basis for Sequoyah Nuclear Plant is the 0.18 g modified Housner spectrum discussed above. However, in the course of their review for the operating license, NRC requested additional information concerning the seismic design basis. This culminated in the development of a site specific response spectrum. This spectrum represents the 84th percentile of 13 actual earthquake recordings and has a peak acceleration of 0.22 g. This site specific spectrum was used for evaluation of present designs and not as a design basis. The development of the site specific spectrum is presented in the following reports.

1. Justification of the Seismic Design Criteria Used for the Sequoyah, Watts Bar, and Bellefonte Nuclear Plants - Phase I, TVA, April 1978.

2. Justification of the Seismic Design Criteria Used for the Sequoyah, Watts Bar, and Bellefonte Nuclear Plants - Phase II, TVA, August 1978.

3. Prediction of strong motions for Eastern North America on the Basis of Magnitude, Weston Geophysical Report for TVA, August 1978.

4. Earthquake Ground Motion Study in the Vicinity of the Sequoyah Nuclear Power Plant, Weston Geophysical Report for TVA, February 1979.

5. Justification of the Seismic Design Criteria Used for the Sequoyah, Watts Bar, and Bellefonte Nuclear Plants - Phase II - Responses to NRC Questions 1 to 6, TVA, June 1979.

Therefore, as a result of the development of the site specific response spectrum in 1979, an SSE of 0.22g has been considered. 10 CFR Part 100, Appendix A, 1973, regulations no longer require a 1/2 SSE; however, applicants are required to select an OBE equal to at least 1/2 of the SSE unless supporting data are presented to clearly justify otherwise. TVA presented such data (reports 2 and 5, above) and justified an OBE of 0.09g, less than 1/2 of the present site specific SSE of 0.22g and the same as the 1/2 SSE used in early seismic analyses.

Figures 2.5.2-11 through 2.5.2-14 illustrate the relationship between the minimum design response spectra and the actual site seismic design response spectra for the SSE for all damping ratios used in the design of rock-supported structures.

2.5.3 Surface Faulting

The lithologic, stratigraphic, and structural conditions at the site and in the surrounding area and the geologic history of the region have been discussed previously in Paragraphs 2.5.1.3, 2.5.1.4, and 2.5.1.5, and will not be repeated here.

2.5.4 Stability of Surface Materials

2.5.4.1 Subsidence

Most major Category I structures are founded on bedrock and no subsidence is to be expected. In most instances the weight of rock removed in foundation excavation equals or exceeds the weight imposed by the structure. Sufficient exploratory drilling has been done to assure there are no karstic solution zones underlying the plant that would allow collapse. Any small solution areas below foundation grade have been grouted in the routine course of construction.

No mining or extensive groundwater withdrawal, either of which might allow subsidence, occurs in the area.

Loads imposed by the plant structures are not of sufficient magnitude to develop compaction subsidence in material having compressive strengths ranging from 5,000 to 15,000 lb/in^2. No regional warping is known in the southern Appalachian area of sufficient magnitude to impose unequal stresses on the plant structures.

2.5.4.2 Zone of Deformed or Weak Material

Sufficient exploration was done prior to final location of the individual structures to insure that weak or deformed zones are not present in the foundation areas. Any minor defects that were disclosed during excavation were treated appropriately as a standard construction procedure.

2.5.4.3 Bedrock Stresses

No specific investigations of residual stress accumulations in the foundation strata were made. Experience at numerous previous major construction projects in the region has shown that this is not a consideration. Such stress effects as "popping," rock bursts, and foundation "heaving" were not observed during foundation evacuation.

2.5.5 Stability of Subsurface Materials

2.5.5.1 Excavations and Backfill

Excavations and backfill are described in Paragraph 2.5.1.11.

2.5.5.2 Liquefaction Potential

The liquefaction potential of all slopes and soil deposits were evaluated by using empirical rules based on observed performance and by comparing the soil conditions and earthquake characteristics at the site with similar sites that have liquefied.

The empirical rules used are based on the Japanese experience during the Niigata earthquake. It was observed that the following general conditions could cause liquefaction:

1. The percentage of silt and clay-size particles should be less than 10 percent.
2. The particle diameter at 60 percent passing should be between 0.2 mm and 1.0 mm.
3. The uniformity coefficient should be between 2 and 5.
4. The blow count from Standard Penetration Tests should be less than 15.

Using these rules there were no soils which indicated potential liquefaction. A comparison of the soil conditions and the earthquake characteristics at the site with similar sites that have liquefied indicated that there were no potentially liquefiable soils at the site.

2.5.5.3 Static Analysis

2.5.5.3.1 Settlement Analysis

Soil supported Category I structures were investigated to determine the amount of settlement each would undergo. Settlement calculations were made for the Diesel Generator Building and the Low Level Radwaste Storage Facility.

Diesel Generator Building

The Diesel Generator Building (DGB) had a net increase in load on the soil.

The settlement calculations contain several conservative assumptions which make the estimated value of settlement an upper bound. As a result of these conservative assumptions, the settlement actually experienced is less than estimated.

A time-settlement rate was not determined for the original calculations, as we were committed to waiting for settlement to stabilize. We determined that settlement had stabilized sufficiently in the first two years (see Figure 2.5.5-1).

Low Level Radwaste Storage Facility

The Low Level Radwaste Storage (LLRW) Facility is located in an area that underwent significant changes during the construction of the plant. Initially, the area served as a borrow source, and material was excavated to approximately the final grade for the LLRW facility. The area was then used for a yard storage area and later as a storage area for spoil material. Prior to its use for the LLRW facility, the spoil material and some additional in situ material were removed to reach final grade. The maximum net increase in soil pressure due to the LLRW facility above the original overburden load was 0.32 tons/ft2. The resultant theoretical settlement due to the imposed load was less than the allowable settlement. A settlement monitoring program for the LLRW facility has been established and is described in section 2.5.5.3.2.

2.5.5.3.2 Settlement Monitoring

Settlement monitoring programs were developed for the Diesel Generator Building, the East Steam Valve Rooms, the Low Level Radwaste Storage Facility, and the ERCW Support Slab and Pumping Station. Settlement programs were not developed for the Waste Packing Area and the Condensate Demineralizer Waste Evaporator Building. The details of each program or the reasons for not developing a settlement program are given below.

Diesel Generator Building - This soil supported structure was monitored for settlement. It has a uniform bearing pressure of 1400 lb/ft2. Settlement monuments were placed at each corner of the structure. Readings were started in January 1973 and read monthly until January 1974 and then quarterly until January 1975. No readings were then made until April 1979.

Based on available data and our past experience, there are no adverse trends being exhibited; settlements are not significant; and there has been no adverse structural performance. Settlement readings will no longer be reported for this structure.

The construction period for the DGB extended from June 1972 to September 1973. The base slab and the first lift of the exterior walls were constructed before the settlement markers were placed and the first settlement readings were taken. The electrical conduit connections were made between November 1974 and January 1975. The piping connections were made after July 1978.

East Steam Valve Room - This structure was originally supported on soil but due to excessive settlement was underpinned with caissons. The caissons were completed between February and

August 1976. Negligible settlement has occurred since the caissons were installed. Because of this excellent performance, a continued settlement monitoring program is not warranted.

The electrical conduit connections were made between May 1978 and the present. The piping connections were made between September 1977 and October 1978. All of these were installed after the caissons were in place.

ERCW Support Slab and Pump Station - The ERCW support slab is supported on piles driven to rock. The ERCW pumping station is supported on rock. A settlement monitoring program was developed for both of these features. The survey markers were read monthly from June 1979 to March 1980, semiannually from March 1980 to September 1981, and annually from September 1981 to September 1984. Negligible settlement was found during the monitoring program. The settlement monitoring program was discontinued in September 1984 after 5 years of monitoring.

Waste Packaging Area and Condensate Demineralizer Waste Evaporator Building - These structures are supported on piles driven to rock. No settlement monitoring program was developed for these structures. Since the piles are driven to rock, there is no need to monitor settlement.

The supporting piles were driven to rock before placement of the foundation mat. For the Waste Packaging Area, the piles were completed in October 1975, and the electrical conduit connections were made between January 1977 and December 1978. There is no Category I piping for this building. For the Condensate Demineralizer Waste Evaporator Building, the piles were completed in June 1977. The piping connections were made in August 1978.

Low Level Radwaste Storage Facility

Each storage module has four individual compartments with each compartment being composed of five unit cells. The storage modules are designed for a total settlement of 9 inches, a differential settlement of 4 inches over an individual storage compartment, and a differential settlement of 4 inches between individual compartments. Settlement monitoring points are established on each corner of each compartment of each module and settlements are recorded annually until settlement has essentially ceased.

2.5.6 Slope Stability

2.5.6.1 Slope Characteristics

2.5.6.1.1 Slopes at Diesel Generator Building and Cooling Towers

The Diesel Generator Building and Cooling Towers are located on a gently sloping hillside southeast of the main plant area. A cross section of the hillside is shown in Figure 2.5.6-1.

The soil properties are obtained as described in Paragraph 2.5.1.9.

The R-test strengths of the soil are used in the seismic pseudo-static stability analyses. The soil properties used in the seismic pseudostatic stability analyses are shown in Figure 2.5.6-1.

2.5.6.1.2 Condenser Cooling Water Pumping Station Intake Channel Slopes

The intake channel shown in Figure 2.1.2-1 is located on the north side of the main plant area. The side slopes of both the approach channel and the forebay area are cut on a 3.5 horizontal to 1 vertical slope. Typical cross sections of the approach channel and forebay slopes are shown in Figure 2.4.8-1.

The side slopes in the forebay area are Category I slopes and are constructed to remain stable for the most critical design conditions. Enough water is retained in the forebay for plant shutdown using a closed mode of operation and therefore the approach channel slopes are not designed as Category I slopes.

The soil properties used in the seismic pseudostatic stability analysis of the side slopes are shown in Figure 2.5.6-2. See paragraph 2.5.1.9 for additional information on the soil properties.

2.5.6.1.3 Dike Slopes at the ERCW Pumping Station

The dike leading to the ERCW pumping station on Chickamauga Reservoir shown in Figure 2.1.2-1 is located northeast of the main plant across the embayment from the condenser cooling water supply pumping station. The dike has Category I slopes and is designed to remain stable for the most critical design conditions.

2.5.6.2 Design Criteria and Analysis

2.5.6.2.1 Design Criteria and Analysis of Slopes at Diesel Generator Building and Cooling Towers

The seismic stability analysis of the hillside is performed assuming circular failure arcs using the Modified Swedish Method with Slices and a Newmark analysis. Horizontal and vertical seismic accelerations are used in the analyses. The accelerations for the Safe Shutdown Earthquake in the soil deposit and on these soil-supported structures are obtained as discussed in Paragraphs 3.7.1.6 and 3.7.2.1.

The worst location for failure is a section which includes the Diesel Generator Building since it is the heaviest structure and has the largest seismic forces acting on it. The water table in the soil deposit is conservative assumed at elevation 705.0. The factor of safety during a Safe Shutdown Earthquake must be greater than 1.0.

Several circular failure arcs are considered to determine the location of the critical arc. The critical failure arc is shown in Figure 2.5.6-1. A Newmark analysis is performed for this critical failure arc. The Newmark analysis shows that the Design Basis Earthquake will not induce sliding along this failure arc. From these analyses it is concluded that the hillside will be stable during a Safe Shutdown Earthquake.

2.5.6.2.2 Design Criteria and Analysis of (Condenser Cooling Water Pumping Station) Intake Channel Slopes

The side slopes of the forebay portion of the intake channel are designed and constructed such that they remain stable for the most critical design condition, the occurrence of a Safe Shutdown Earthquake coincident with a sudden drawdown of the reservoir water level.

The stability analyses of the slopes were performed assuming circular failure planes using the Modified Swedish Method with Slices. Horizontal and vertical seismic coefficients were used in the analyses. The accelerations for the Safe Shutdown Earthquake in the soil deposit were obtained as discussed in Paragraph 3.7.1.6.

Several circular failure planes were considered and the minimum factor of safety was found to be 1.31. This failure plane is shown in Figure 2.5.6-2.

In addition a level ledge with a 15-foot-minimum width extends from the toe of the slide slopes to the edge of the forebay. This precludes the spillage of material into the forebay from a localized slippage of the slope.

2.5.6.2.3 Design Criteria and Analyses of Dike Slopes at the ERCW Pumping Station

The Category I slopes of the dike leading to the ERCW pumping station are designed such that they remain stable for the most critical design condition; the occurrence of a Safe Shutdown Earthquake coincident with normal reservoir level. The dike is also designed to remain stable during the PMF and subsequent drawdown.

The stability analysis of the slopes were performed using wedge analysis techniques. Pseudo-static analyses were used in all the seismic evaluations. Horizontal seismic coefficients were used in these analyses. The accelerations in the dike from the Safe Shutdown Earthquake were obtained as discussed in paragraph 3.7.1.6. The minimum factor of safety was determined to be 1.22.

Calculations were also performed to approximate the deformations which might be expected to occur as a result of stresses caused by a seismic event. This calculation considered the effect of vertical acceleration. The resulting deformations were shown to have no significant effect on the buried ERCW pipes.

2.5.6.3 Compaction Specifications

See Paragraph 2.5.1.11.

2.5.7 References

1. Bollinger, G. A., Harding, S. T., Langer, C. J., 1974, Alcoa Maryville Tennessee, Earthquake Swarm of November-December, 1973, Geological Society of America, Abstracts with Programs, Vol. 6, No. 4, p. 336.

2. Bridge, Josiah, 1950, Bauxite Deposits of the Southeastern United States, 1949 Symposium on Mineral Resources of the Southeastern United States, University of Tennessee Press, Knoxville, Tennessee, pp. 170-201.

3. Butts, Charles, and Gildersleeve, Benjamin, 1948, Geology and Mineral Resources of the Paleozoic Area in Northwest Georgia, Georgia Department of Mines, Mining, and Geology, Bulletin 54, p. 176.

4. Campbell, M. R., 1899, Bristol Quadrangle, USGS Geologic Atlas, Folio 59.

5. Colton, G. W., 1970, The Appalachian Basin - Its Depositional Sequences and Their Geologic Relationships, Studies of Appalachian Geology, Central and Southern, John Wiley and Sons, pp. 5-47.

6. Cooper, B. M., 1961, Grand Appalachian Field Excursion, Geologic Society of America, 74th Annual Meeting, Guidebook Trip 1, p. 187.

7. 1964, Relation of Stratigraphy to Structure in the Southern Appalachians, in Tectonics of the Southern Appalachians, VPI Memoir 1, pp. 81-114.

8. Dietz, R. S., 1972, Geosynclines, Mountains, and Continent - Building, Scientific American, Vol. 226, No. 3, pp. 30-38.

9. Fenneman, N. M., 1938, Physiography of the Eastern United States, McGraw-Hill Company, New York, New York.

10. Ferguson, H. W. and Jewell, W. B., 1951, Geology and Barite Deposits of the DelRio District, Cocke County, Tennessee, Tennessee Division of Geology, Bulletin 57, p. 235.

11. Grant, L. F., Concept of Curtain Grouting Evaluation, Journal of Soil Mechanics Division of the ASCE, Vol. 90, SM 1, (1964).

12. Gwinn, V.E., 1964, Thin-skinned Tectonics in the Plateau and Northwestern Valley and Ridge Provinces of the Central Appalachians, Geological Society of America Bulletin, Vol. 75, pp. 863-899.

13. Hack, J. T., 1965, Geomorphology of the Shenandoah Valley, Virginia and West Virginia, USGS Professional Paper 484, p. 84.

14. 1966, Interpretation of Cumberland Escarpment and Highland Rim, South Central Tennessee and Northeastern Alabama, USGS Professional Paper 524-C, p. 16.

15. Hardeman, W. D., et al, 1966, Geologic Map of Tennessee, Tennessee Division of Geology, Nashville, Tennessee, four sheets.

16. Harris, L. D., 1965, The Clinchport Thrust Fault - A Major Structural Element of the Southern Appalachian Mountains, USGS Professional Paper 525-3, pp. 49-55.

17. 1970, Details of Thin-Skinned Tectonics in Parts of Valley and Ridge and Cumberland Plateau Provinces of the Southern Appalachians, Studies of Appalachian Geology, Central and Southern, John Wiley & Sons, pp. 161-173.

18. Hayes, C. W., 1891, The Overthrust Faults of the Southern Appalachians, Geological Society of America Bulletin, Vol. 2, pp. 141-154.

19. 1892, Report on the Geology of North-Eastern Alabama, and Adjacent Portions of Georgia and Tennessee, Geological Survey of Alabama, Bulletin 4, p. 85.

20. 1894, Ringgold Quadrangle, USGS Geologic Atlas, Folio No. 2.

21. 1894a, Kingston Quadrangle, USGS Geologic Atlas, Folio No. 4.

22. 1894b, Chattanooga Quadrangle, USGS Geologic Atlas,Folio No. 6.

23. 1895, Stevenson Quadrangle, USGS Geologic Atlas, Folio No. 19.

24. 1895a, Cleveland Quadrangle, USGS Geologic Atlas, Folio No. 20.

25. 1895b, Pikeville Quadrangle, USGS Geologic Atlas, Folio No. 21.

26. 1895c, The Southern Appalachians, National Geographic Society Monograph, Vol. 1, No. 10, pp. 305-336.

27. 1899, Physiography of the Chattanooga District, in Tennessee, Georgia, and Alabama, USGS 19th Annual Report, Pt. 2, pp. 1-58.

28. Hayes, C. W. and Campbell, M. R., 1894, Geomorphology of The Southern Appalachians, National Geographic Magazine, Vol. 6, pp. 63-126.

29. Keith, Arthur, 1895, Knoxville Quadrangle , USGS Geologic Atlas, Folio No. 15.

30. 1896, Some Stages of Appalachian Erosion, Geological Society of American Bulletin, Vol. 7, pp. 519-525.

31. 1896a, Loudon Quadrangle, USGS Geologic Atlas, Folio No. 25.

32. 1896b, Morristown Quadrangle, USGS Geologic Atlas, Folio No. 27.

33. 1896c, Briceville Quadrangle, USGS Geologic Atlas, Folio No. 33.

34. 1901, Maynardville Quadrangle, USGS Geologic Atlas, Folio No. 75.

35. 1902, Topography and Geology of the Southern Appalachians, U.S., 57th Congress, Senate Document No. 84, App. B, pp. 111-122.

36. 1902a, Folded Faults in the Southern Appalachians, Science Vol. 15, pp. 822-823.

37. 1903, Cranberry Quadrangle, USGS Geologic Atlas, Folio No. 90.

38. 1904, Asheville Quadrangle, USGS Geologic Atlas, Folio No. 116.

39. 1905, Greeneville Quadrangle, USGS Geologic Atlas, Folio No. 118.

40. 1905a, Mt. Mitchell Quadrangle, USGS Geologic Atlas, Folio No. 124.

41. 1907, Nantahala Quadrangle, USGS Geologic Atlas, Folio No. 143.

42. 1907a, Roan Mountain Quadrangle, USGS Geologic Atlas, Folio No. 151.

43. 1923, Outlines of Appalachian Structure, Geological Society of America Bulletin, Vol. 34, pp. 304-380.

44. 1927, Great Smoky Overthrust, Geological Society of America Bulletin, Vol. 38, pp. 154- 155.

45. Kelleberg, J. M., and Benziger, C. P., 1953, Preliminary Geologic Investigations for Steam Plant H - Soddy Daisy Site, TVA Report.

46. King, P. B., 1949, The Floor of the Shenandoah Valley, American Journal of Science, Vol. 247, pp. 73-93.

47. 1950, Tectonic Framework of the Southeastern United States, American Association of Petroleum Geologists Bulletin, Vol. 34, pp. 635-671.

48. 1955, A Geologic Section Across the Southern Appalachians, Geological Society of America, 68th Annual Meetings, Guidebook, pp. 332-373.

49. 964, Further Thoughts on Tectonic Framework of Southeastern United States, in Tetonics of the Southern Appalachians, VPI Memoir 1, pp. 5-31.

50. 1964a, Geology of the Great Smoky Mountains, Tennessee, USGS Professional Paper 349-c, p.148

51. 1969, The Tectonics of North America, USGS Professional Paper 628, p. 45.

52. King, P. B. and Ferguson, H. W., 1960, Geology of Northernmost Tennessee, USGS Professional Paper 311, p. 136.

53. King, Phillip B., et al, 1944, Geology and Manganese Deposits Northeastern Tennessee. Tennessee Division of Geology, Bulletin 52, pp. 24-25, 59.

54. Milici, R. C., 1962, The Structural Geology of the Harriman Corner, Roane County, Tennessee, American Journal of Science, Vol. 260, pp. 787-793.

55. 1963, Low-Angle Overthrust Faulting, as Illustrated by the Cumberland Plateau-Sequatchie Valley Fault System, American Journal of Science, Vol. 261, pp. 815-825.

56. 1967, The Physiography of Sequatchie Valley and Adjacent Portions of the Cumberland Plateau, Tennessee Division of Geology Report of Investigations, No. 22.

57. 1968, Mesosoic and Cenozoic Physiographic Development of the Lower Tennessee River - in Terms of the Dynamic Equilibrium Concept, Journal of Geology, Vol. 76, pp. 472-479.

58. 1970, The Allegheny Structural Front in Tennessee and its Regional Tectonic Implications, American Journal of Science, Vol. 268, pp. 127-141.

59. Miller, R. L., 1962, The Pine Mountain Overthrust at the Northeast End of the Powell Valley Anticline, Virginia, USGS Professional Paper 450-D, pp. 69-72.

60. Morrill, B. J., Risavich, F., 1974, Preliminary Report of Maryville, Tennessee, Earthquake of November 30, 1973, Manuscript Report, USGS Seismic Engineering Unit, p. 7.

61. Neuman, R. B. and Nelson, W. H., 1965, Geology of the Western Great Smoky Mountains, Tennessee, USGS Professional Paper 349-D, p. 81.

62. Owens, J. P., 1970, Post-Triassic Tectonic Movements in the Central and Southern Appalachians as Recorded by Sediments of the Atlantic Coastal Plain, Studies of Appalachian Geology, Central and Southern, John Wiley and Sons, pp. 417-427.

63. Rodgers, John, 1948, Geology and Mineral Deposits of Bumpus Cove, Unicoi and Washington Counties, Tennessee. Tennessee Division of Geology, Bulletin 54, pp. 15, 40.

64. 1949, Evolution of Thought on Structure of Middle and Southern Appalachians, American Association of Petroleum Geologists Bulletin, Vol. 33, pp. 1643-1654.

65. 1950, Mechanics of Appalachian Folding as Illustrated by Sequatchie Anticline, Tennessee and Alabama, American Association of Petroleum Geologists Bulletin, Vol. 34, pp. 672-681.

66. 1953, Geologic Map of East Tennessee with Explanatory Text, Tennessee Division of Geology, Bulletin 58, Part II, p. 168.

67. 1953a, The Folds and Faults of the Appalachian Valley and Ridge Province, Kentucky Geological Survey, Series 9, Special Publication 1 pp. 150-166.

68. 1963, Mechanics of Appalachian Foreland Folding in Pennsylvania and West Virginia, American Association of Petroleum Geologists Bulletin, Vol. 47, pp. 1527-1536.

69. 1964, Basement and No-Basement Hypotheses in the Jura and the Appalachian Valley and Ridge, in Tectonics of the Southern Appalachians, VPI Memoir 1, pp. 71-80.

70. 1967, Chronology of Tectonic Movements in the Appalachian Region of Eastern North America, American Journal of Science, Vol. 265, pp. 408-427.

71. 1970, The Tectonics of the Appalachians , Wiley- Interscience, New York, p. 271.

72. Safford, J. M., 1856, A Geological Reconnaissance of the State of Tennessee, First Biennial Report, Nashville, p. 164.

73. 1859, On Some Points in American Geological History, American Journal of Science, 2nd Series, Vol. 27, pp. 140-141.

74. 1869, Geology of Tennessee, Nashville, Tennessee.

75. Stearns, R. G., 1954, The Cumberland Plateau Overthrust and Geology of the Crab Orchard Mountains Area, Tennessee, Tennessee Division of Geology, Bulletin 60, p. 47.

76. 1955, Low-Angle Overthrusting in the Central Cumberland Plateau, Tennessee, Geological Society of America Bulletin, Vol. 66, pp. 615-628.

77. Swingle , G. D., 1961, Structural Geology Along the Eastern Cumberland Escarpment, Tennessee, Tennessee Division of Geology, Report of Investigations 13, p. 46.

78. Troost, Gerrard, 1837, Fourth Geologic Report to the Twenty-First General Assembly of the State of Tennessee, Nashville, Tennessee.

79. 1840, Fifth Geologic Report to the Twenty-First General Assembly of the State of Tennessee, Nashville, Tennessee.

80. 1841, Sixth Geologic Reports to the Twenty-First General Assembly of the State of Tennessee, Nashville, Tennessee.

81. Watkins, J. S., 1964, Regional Geologic Implications of the Gravity and Magnetic Fields of a Part of Eastern Tennessee and Southern Kentucky, USGS Professional Paper 516-A, p. 17.

82. Willis, Bailey, 1893, The Mechanics of Appalachian Structure, USGS 13th Annual Report, Part 2, pp. 211-281.

83. Wilson, C. W., Jr., and Stearns, R. G., 1958, Structure of the Cumberland Plateau, Tennessee, Geological Society of America Bulletin, Vol. 69, pp. 1283-1296.

84. CEB REPORT 97-01, " Geotechnical and Soils Investigations for the Sequoyah Nuclear Plant," RIMS No. B39 970811 001.

Table 2.5.1-1

SUMMARY OF IN SITU UP-HOLE DYNAMIC TESTING
REACTOR FOUNDATION AREA

Station Number	Geophone Elevation	Shot Elevation	Rock Type and Dip	Density lbs/cu ft Calculated	Vp Compressional Velocity ft/sec Measured	Vp Shear Velocity ft/sec Measured	Vp / Vs Ratio	Poisson's Ratio Calculated	Young's Modulus psi, 10^6 Calculated
W26+84 N70+58	677.2	627.2	Limestone with 12% shale, 60°-70°	170	13,550	7,450	1.8	0.28	5.3
W27+50 N69+90	672.9	629.9	Limestone with 20% shale, 45°-55°	170	9,736	4,873	2.0	0.33	2.4
W27+50 N70+58	676.9	635.9	Limestone, scattered shale partings, 50°	170	11,714	5,616	2.1	0.35	3.2
W27+50 N71+23	675.6	630.6	Limestone with 15% shale, 45°-50°	170	11,842	7,258	1.6	0.18	4.8
W27+85 N68+50	664.8	622.8	Limestone with 14% shale, 70°-85°	170	8,400	--	--	--	--
W28+16 N70+58	678.9	627.9	Limestone with 25% shale, 60°-80°	170	12,500	7,083	1.8	0.28	4.5
W28+50 N67+75	642.6	601.6	Limestone with 5% shale, 50°-70°	170	15,185	--	--	--	--
W28+50 N68+40	668.2	628.2	Limestone with 6% shale, 45°-65°	170	10,444	5,437	1.9	0.31	2.8
W28+50 N69+06	674.6	634.6	Limestone with 10% shale, 40°-60°	170	12,903	6,557	2.0	0.31	5.8
W29+15 N68+50	661.0	621.0	Limestone with 5% shale, 5°-90°	170	13,333	6,993	1.9	0.31	4.7

Note: A valid shear velocity measurement could not be established for two stations.

Table 2.5.1-2 (Sheet 1)

SUMMARY OF IN SITU CROSS-HOLE DYNAMIC TESTING
REACTOR FOUNDATION AREA

Sequoyah Nuclear Plant

Geophone Station	Shot Station	Between Hole Elevation	Density lbs/cu ft Calculated	Vp Compressional Velocity ft/sec Measured	Vp Shear Velocity ft/sec Measured	Vp/Vs Ratio	Poisson's Ratio Calculated	Young's Modulus psi, 10^6 Calculated	Type Rock
W26+84 N70+58	W27+50 N70+58	665	170	11,470	--	--	--	--	Limestone with inter-bedded shale
W27+50 N69+90	W27+50 N70+58	665	170	18,649	--	--	--	--	Limestone, with inter-bedded shale
W27+50 N71+23	W27+50 N70+50	665	170	18,659	9,697	1.9	0.31	9.3*	Limestone with inter-bedded shale
W27+85 N68+50	W28+50 N69+06	665	170	14,114	7,155	2.0	0.33	4.9	Limestone with inter-bedded shale
W27+85 N68+50	W28+50 N67+75	665	170	12,286	--	--	--	--	Limestone with inter-bedded shale
W28+16 N70+58	W27+50 N70+58	665	170	12,226	--	--	--	--	Limestone with inter-bedded shale
W28+50 N68+40	W27+85 N68+50	665	170	11,799	--	--	--	--	Limestone with inter-bedded shale
W28+50 N68+40	W28+50 N67+75	643	170	15,403	7,143	2.2	0.37	4.9	Limestone with inter-bedded shale

*Note: Young's modulus value 9.3 x 10^6 is considered abnormally high for this type rock, and should be omitted when averaging. The average value is 4.4 x 10^6 psi as shown at the end of section 2.5.1.7.

Table 2.5.1-2 (Sheet 2)
(Continued)

SUMMARY OF IN SITU CROSS-HOLE DYNAMIC TESTING
REACTOR FOUNDATION AREA

Sequoyah Nuclear Plant

Geophone Station	Shot Station	Between Hole Elevation	Density lbs/cu ft Calculated	Vp Compressional Velocity ft/sec Measured	Vp Shear Velocity ft/sec Measured	Vp / Vs Ratio	Poisson's Ratio Calculated	Young's Modulus psi, 10^6 Calculated	Type Rock
W28+50 N68+40	W28+50 N69+06	665	170	13,983	--	--	--	--	Limestone with inter-bedded shale
W28+50 N68+40	W29+15 N68+50	661	170	14,255	6,700	2.1	0.35	4.7	Limestone with inter-bedded shale
W28+50 N69+06	W28+50 N67+75	665	170	12,000	5,860	2.0	0.33	3.6	Limestone with inter-bedded shale
W29+15 N68+50	W27+85 N68+50	665	170	13,436	--	--	--	--	Limestone with inter-bedded shale
W29+15 N68+50	W28+50 N67+75	665	170	11,583	6,300	1.8	0.28	3.9	Limestone with inter-bedded shale

Note: A valid shear velocity measurement could not be established for seven stations.

Table 2.5.1-3

EQUATION FOR DYNAMIC MODULUS OF ELASTICITY

$$E = \frac{(V_p)^2 (1+\sigma)(1-2\sigma)}{144\, g\, (1-\sigma)} \gamma$$

Where

E = Dynamic modulus of elasticity (psi)

V_p = Compressional wave velocity (ft/sec)

σ = Poisson's Ratio

g = Gravitational constant of 32.2 ft/sec

γ = Unit Weight (lbs/ft^3)

EQUATION FOR POISSON'S RATIO

$$\sigma = \frac{\frac{1}{2}\left(\frac{V_p^2}{V_s^2}\right) - 1}{\left(\frac{V_p^2}{V_s^2}\right) - 1}$$

Where

σ = Poisson's Ratio

V_p = Compressional wave velocity (ft/sec)

V_s = Shear wave velocity (ft/sec)

Table 2.5.1-4

SUMMARY OF GROUTING

First Stage Grouting
(holes drilled 10 feet into rock)

(1) Holes Drilled		(2) Holes with Take	(3) % Holes With Take	(4) Bags of Cement	(5) Unit Take (Bags/Foot of Hole)
Primary	333	38	11.4%	471	1.24
Secondary	71	11	15.1%	105	0.95
Third Series	16	1	6.3%	1	0.10
Total	420	50		577	
Average	---	---	11.9%	---	1.15

Second Stage Grouting
(holes drilled 45 feet into rock)

(1) Holes Drilled		(2) Holes with Take	(3) % Holes with Take	(4) Bags of Cement	(5) Unit Take (Bags/Foot of Hole)
Primary	220	51	23.2%	528	0.23
Secondary	93	35	37.6%	420	0.27
Third Series	109	49	44.9%	448	0.20
Fourth Series	63	21	33.3%	171	0.18
Fifth Series	44	12	27.2%	81	0.15
Total	529	168		1648	
Average	---	---	31.8%	---	0.22

Total bags of cement injected. 2225
Total bags of cement-backfill. 681
Total bags of cement-waste 643

Total bags of cement used 3549

TABLE 2.5.1-5

STATIC AND DYNAMIC ROCK-BEARING CAPACITIES
FOR ROCK SUPPORTED CATEGORY I STRUCTURES([1])

Structure	Static Bearing Allowable (lb/in^2)	Dynamic Bearing Allowable (lb/in^2)
Shield	500	Adequate
Auxiliary-Control	500	Adequate
Additional Equipment	500	Adequate
Intake Pump Station	500	Adequate
Intake Pump Station Retaining Wall	500	Adequate
ERCW Pump Station	500	1500
ERCW Pump Station Access Dike Cells	500	1500

([1]) Base slab on rock.

TABLE 2.5.1-6

SOIL-BEARING CAPACITIES AND FACTORS OF SAFETY FOR SOIL SUPPORTED CATEGORY I STRUCTURES

	Sustained Loads	Dynamic Loads	
	Allowable Soil Bearing(1) lb/ft^2	Factor of Safety	Allowable Soil Bearing(2) lb/ft^2
Diesel Generator Building	2,500		3,000
Refueling Water Storage Tank Foundations	6,000		6,000

1. The factor of safety for the allowable soil bearing capacity for sustained loads is at least 3.0.

2. The factor of safety for the allowable soil bearing capacity for dynamic loads is at least 2.0.

SQN
Table 2.5.1-7 Revised by Amendment 13

SUMMARY OF EARTHFILL TEST DATA - DENSITY

Standard Compaction

Project Sequoyah Nuclear Plant Feature Type "A" Backfill - Category I

Period 1-19-71 To 5-1-78 Test No._____ To _____ Prepared
Fill Quantity: Period _____ yd^3 To Date _____ by

Percent Compaction (γ_{df}/γ_{dL})x100	Plot This Col.	Prev. Cum F	This Period Frequency (F)	This Period F	This Period Cum F	This Period Cum %	To Date F	To Date Cum F	To Date Cum %
94.0	95.9						19	19	22
96.0	97.9						24	43	50
98.0	99.9						14	57	66
100.0	101.9						13	70	81
102.0	103.9						6	76	88
104.0	105.9						3	79	92
106.0	107.9						4	83	96
108.0	109.9						1	84	98
110.0	111.9						1	85	99
112.0	113.9						1	86	100
Totals			--	--		--	--		--

	Prev.	This Period	To Date
Avg. fill dry density, γ_{df}, pcf			98.8
Avg. maximum dry density, γ_{dL}, pcf			96.4
Mean variation $\gamma_{df}-\gamma_{dL}$, pcf			-2.4
Avg. % plus No. 4 by Dry Weight			

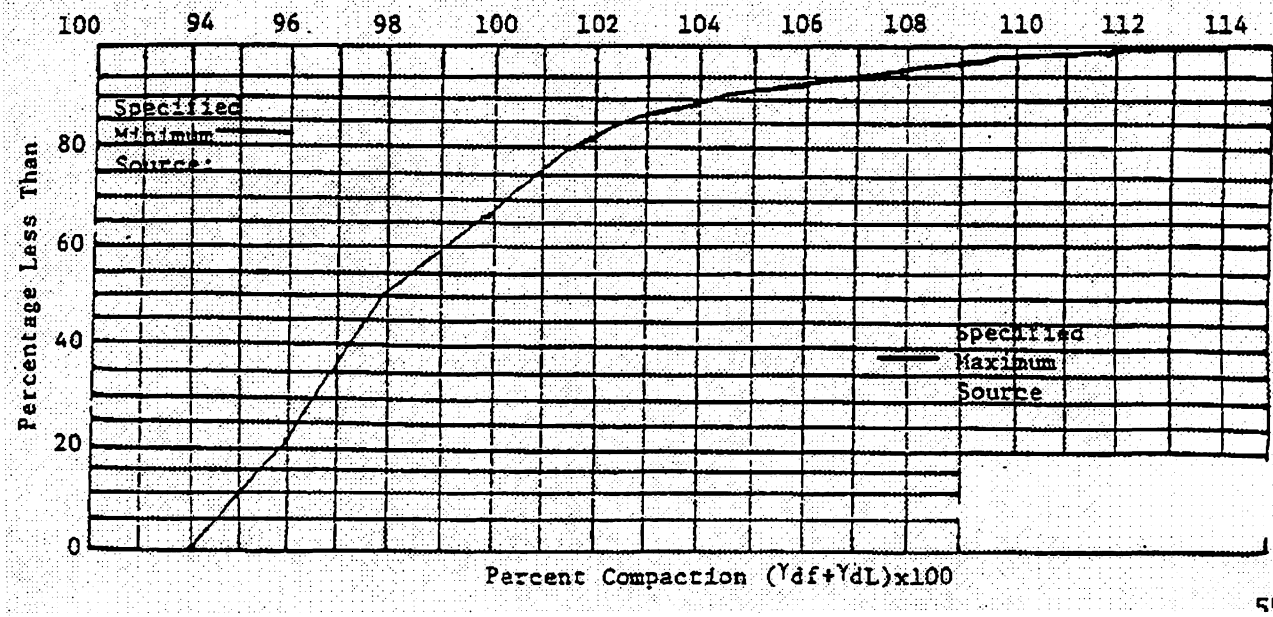

Revised by Amendment 13

SUMMARY OF EARTHFILL TEST DATA - MOISTURE CONTENT

Standard Compaction

Project Sequoyah Nuclear Plant Feature Type "A" Backfill

Period 1-19-71 To 5-1-78 Test No._____ To _____ Prepared
Fill Quantity: Period _____ yd^3 To Date _____ by

(W_f-W_o), Percent		Plot This Col.	Prev. Cum F	This Period Frequency (F)	This Period F	This Period Cum F	This Period Cum %	To Date F	To Date Cum F	To Date Cum %
W_f above opt.										
	9.0	7.1								
	7.0	5.1						6	6	7
	5.0	3.1						10	16	19
	3.0	1.1						22	38	44
Plot 0	1.0	-1.0						32	70	81
	-1.1	-3.0						11	81	94
W_f below opt.	-3.1	-5.0						2	83	96
	-5.1	-7.0						2	85	99
	-7.1	-9.0						1	86	100
	Totals			--	--		--	--		--

	Prev.	This Period	To Date
Avg. fill moisture content, W_f, %			25.6
Avg. Optimum moisture content, W_o, %			24.9
Mean variation (W_f-W_o), %			0.7

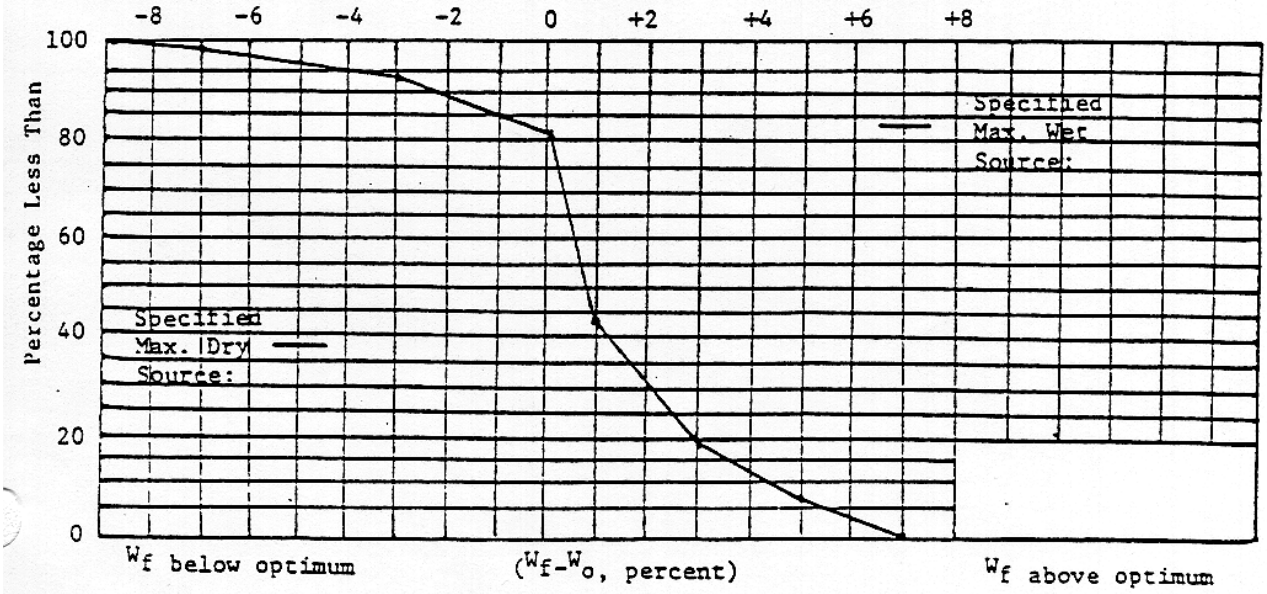

Table 2.5.1-9

SEQUOYAH NUCLEAR PLANT
SUMMARY OF IN-SITU SOIL DOWN-HOLE DYNAMIC TESTING
DIESEL GENERATOR BUILDING

Location	Station	Zone Depth Elevation	Vp Compressional Velocity ft/sec Measured	Vs Shear Velocity ft/sec Measured	Density lbs/cu ft Assumed	Poisson's Ratio Calculated	Modulus psi, 10^3 Calculated	Modulus psi, 10^3 Calculated
Diesel	760E,129S	733.3-728.3	1471	631	100	0.39	8.6	23.8
Generator		728.3-728.3	2500	1,235	100	0.34	32.9	88.1
Building		708.3-673.3	6242	955	100	0.49	19.7	58.6

Note: 1.All holes were drilled by a truck-mounted auger.
2.State 760E, 129S was not augered to refusal.

SEQUOYAH NUCLEAR PLANT
SEISMIC REFRACTION SURVEY
IN-SITU ELASTIC PROPERTIES

Zones *	Vp Compressional Velocity ft/sec Measured	Vs Shear Velocity ft/sec Calculated	Density lbs/cu ft Assumed	Poisson's Ratio Assumed	Shear Modulus psi 10^3 Calculated
1	1400	672	100	0.35	9.7
	1400	571	100	0.4	7.0
	1400	422	100	0.45	3.8
2	2900	1393	100	0.35	41.9
	2900	1183	100	0.4	30.2
	2900	874	100	0.45	16.5
3	7987	3836	100	0.35	317.5
	7987	3260	100	0.4	229.3
	7987	2408	100	0.45	125.0

* For zone locations see Figure 2.5.1-10

Calculation Reference 841861022007

Table 2.5.1-10

SEQUOYAH NUCLEAR PLANT

ONSITE STORAGE FACILITY

DYNAMIC SOIL TEST ARRAY SD-1

Summary of Cross-Hole Data (preferred arrival times)

Elevation (feet)	V_p Range	Vp Average	Poisson's Vs Range	Poisson's Ratio Average	Ratio Range	Average
740	2880 - 3420	3060	1120 - 1160	1120	.40 - .44	.42
735	2820 - 3000	2910	920 - 1010	960	.43 - .45	.44
730	3680 - 4040	3910	780 - 900	850	.47 - .48	.48
725	3940 - 4360	4140	830 - 900	880	.47 - .48	.48
720	4000 - 4220	4140	880 - 1020	960	.46 - .48	.47
715	3660 - 4000	3870	810 - 1260	1090	.43 - .48	.46
710	N/A	3280	N/A	840	N/A	.46

Summary of Downhole Data

Elevation (feet)	V_p fps	V_s fps	Poisson's Ratio
745.8-736.0	2040	760	.42
736.0-710.0	5240	760	.49

Calculation Reference: B41861022011

Table 2.5.1-11 (Sheet 1)

SEQUOYAH NUCLEAR PLANT
ONSITE STORAGE FACILITY
DYNAMIC SOIL TEST ARRAY SD-3

Crosshole Survey

Elevation Source and Receiver	Source and Receiver Depth	Average Compressional Velocity (ft/sec) (measured)	Average Shear Velocity (ft/sec) (measured)	Poisson's Ratio (calculated)	Young's Modulus PSI x 10^4 (calculated)	Shear Modulus PSI x 10^4 (calculated)	Bulk Modulus PSI x 10^5 (calculated)	Density (lb.ft^3)
736	5	1806	843	.36	4.71	1.73	0.56	113
731	10	2314	847	.42	4.97	1.75	1.07	113
726	15	2866	803	.46	4.58	1.57	1.79	113
721	20	3202	790	.47	4.46	1.52	2.30	113
716	25	3390	758	.47	4.13	1.40	2.61	113
711	30	3719	733	.48	3.88	1.31	3.20	113
706	35	3545	842	.47	5.08	1.73	2.83	113
701	40	3486	772	.47	4.28	1.45	2.77	113
696	45	3545	785	.47	4.43	1.50	2.86	113
691	50	3947	834	.48	5.01	1.70	3.57	113
686	55	3110	944	.45	6.29	2.17	2.07	113
681	60	3885	1008	.46	7.25	2.48	3.35	113
676	65	4065	1069	.46	8.15	2.48	3.66	113
672	69		1181					
671	70	4065						
666	75	4950						
661	80	4950						
656	85	4950						
652	89	5657						

Note:

1. Shear Wave velocities could not be obtained below elevation due to the difference in borehole depths.
2. The average compressional and shear wave velocities are calculated by averaging the measured velocities for the 25.4-, 19.8- and 14.6-foot distances.
3. The average compressional wave velocities below elevation 691 are calculated by averaging the measured velocities for the 19.8- and 14.6-foot distances. Hole C was blocked below this elevation, therefore no data could be obtained.
4. The density is a representative value determined from laboratory testing of soil samples taken near the array.

Calculation Reference CEB810515025

Table 2.5.1-11 (Sheet 2)

SEQUOYAH NUCLEAR PLANT
ONSITE STORAGE FACILITY
DYNAMIC SOIL TEST ARRAY SD-3

Downhole Survey

Elevation Receiver	Travel Path Distance	Compressional Velocity (ft/sec) (measured)	Shear Velocity (ft/sec) (measured)	Poisson's Ratio (calculated)	Young's Modulus PSI x 10^4 (calculated)	Shear Modulus PSI x 10^4 (calculated)	Bulk Modulus PSI x 10^5 (calculated)	Density (lb.ft^3)
736	11.1	1850	792	.39	4.24	1.53	0.63	113
731	14.1	2014	783	.41	4.22	1.49	0.79	113
726	18.0	2571	818	.44	4.71	1.63	1.39	113
721	22.3	2787	825	.45	4.82	1.66	1.67	113
716	26.9	2988	815	.46	4.73	1.62	1.96	113
711	31.5	3511	810	.47	4.71	1.60	2.79	113
706	36.4	3309	808	.47	4.67	1.59	2.46	113
701	41.2	3169	777	.47	4.32	1.47	2.25	113
696	46.0	3285	807	.47	4.66	1.59	2.42	113
691	50.9	3393	783	.47	4.40	1.49	2.61	113
686	55.9	3493	810	.47	4.71	1.60	2.76	113
681	60.8	3377	844	.47	5.09	1.74	2.55	113
676	65.7	3457	864	.47	5.34	1.82	2.67	113
671	70.7	3927	906	.47	5.89	2.00	3.49	113
666	75.6	3780	910	.47	5.93	2.02	3.21	113
661	80.6	3838	937	.47	6.28	2.14	3.30	113
656	85.5	3886	909	.47	5.92	2.01	3.41	113
651	90.5	3934	932	.47	6.22	2.12	3.49	113

Zones	Compressional Velocity	Shear Velocity	Poisson's Ratio	Young's Modulus	Shear Modulus	Bulk Modulus	Density
741-736	1850	783	.39	4.16	1.49	0.64	113
736-691	4480	783	.48	4.44	1.49	4.69	113
691-651	4480	1275	.46	11.54	3.96	4.36	113

Note:
1. The density is a representative value determined from laboratory testing of soil samples taken near the array.

Calculation Reference CEB810515025

Table 2.5.1-12

SEQUOYAH NUCLEAR PLANT

ERCW PIPELINE

IN-SITU DOWN-HOLE SOIL DYNAMICS

UNSATURATED SOIL

	Compressional Velocity Ft./Sec. Measured	Shear Velocity Ft./Sec. Calculated	Dynamic Shear Modulus PSI x 10^3 Calculated	Dynamic Young's Modulus PSI x 10^3 Calculated
Average	3173	1523	49.2	132.8
Minimum	1585	761	12.5	33.8
Maximum	3888	1867	75.2	203.10

SATURATED SOIL

	4005	1207	31.4	91.2

Calculated Reference B41861022009

Table 2.5.1-13 (Sheet 1)

SEQUOYAH NUCLEAR PLANT
ADDITIONAL DIESEL GENERATOR BUILDING

Summary of Cross-Hole Data for 19.6- and 24.4-foot Travel Paths

Elevation (feet)	V_p Range	V_P Average	V_s Range	V_s Average	Poisson's Ratio Range	Poisson's Ratio Average
715	1970	1970	890 -	930	0.33 -0.37	0.36
710	1880 - 1960	1930	920 - 1060	990	.27 - .36	.32
705	1850	1870	920 - 1120	1035	.21 - .34	.28
700	1920 - 2220	2070	905 - 1080	990	.27 - .40	.35
695	2180 - 2220	2215	1030 - 1085	1095	.33 - .36	.34
690	2880	2900	1100 - 1210	1165	.39 - .41	.40
685	3015 - 3470	3350	1350 - 1420	1435	.36 - .41	.39
680	4445 - 4900	4830	1510 - 1690	1635	.42 - .45	.44
675	4665 - 5315	5035	1720 - 1780	1790	.42 - .44	.43
670	5600 - 6110	5825	1835 - 2035	1945	.42 - .45	.44
665	5435 - 5765	5605	1880 - 1920	1870	.43 - .44	.44
660	5600 - 5695	5895	1745 - 1920	1890	.43 - .45	.44
655	5600 - 5695	5895	1920 - 1985	2055	.43 - .44	.43
650	5555 - 5600	5640	1920 - 2070	2060	.42 - .43	.42
648	N/A	5960	N/A	2070	N/A	.43

Notes:
1. Averages calculated from all velocities (minimum, preferred, and maximum) at each elevation. These averages were used to calculate the Poisson's Ratio average.
2. The ranges are from preferred arrival times at each elevation.

Calculation Reference 41861022012

Table 2.5.1-13 (Sheet 2)

SEQUOYAH NUCLEAR PLANT

ADDITIONAL DIESEL GENERATOR Building

Summary of Cross-Hole Data for 15.2 Foot Travel

Distance (preferred arrival times)

Elevation (feet)	V_p (fps)	V_s (fps)	Poisson's Ratio
715.0	1925	975	0.33
710.0	2350	1040	.38
705.0	2550	1230	.35
700.0	2925	1600	.29
695.0	3800	2200	.25
690.0	4110	2340	.26
685.0	3800	2110	.28
680.0	5040	2550	.33
675.0	6050	3050	.33
670.0	6040	2440	.40
655.0	6040	2560	.39
660.0	6050	2540	.39
655.0	6050	2500	.40
650.0	6000	2440	.40
646.5	5000	2330	.36

Summary of Downhole Data

Elevation (feet)	Vp (fps)	Vs (fps)	Poisson's Ratio
720-700	2375	940	0.41
700-640	5350	2075	.41

Calculation Reference B41861022012

TABLE 2.5.1-14

SEQUOYAH NUCLEAR PLANT

PRIMARY REFUELING WATER TANKS

SEISMIC REFRACTION SURVEY

IN-SITU ELASTIC PROPERTIES

*Zones	Vp Compressional Velocity ft/sec Measured	Vs Shear Velocity ft/sec Calculated	Density lbs/cu ft Assumed	Poisson's Ratio Assumed	Shear Modulus psi (10^3) Calculated
One	2150	1033	110	0.35	25.3
	2150	878	110	0.4	18.3
	2150	648	110	0.45	9.9
Two	3250	1561	110	0.35	57.8
	3250	1326	110	0.4	41.8
	3250	980	110	0.45	22.8

*
Zone one - Between elevations 705.0 and 696.9

Zone two - Between elevations 696.5 and 679.1.

Surface elevation 705.0

Top of rock 679.1, as computed from the refraction survey.

Calculation Reference B41861022008

Table 2.5.2-1 (Sheet 1)

SEQUOYAH PLANT
HISTORICAL EARTHQUAKE LISTING
200 MILE RADIUS AROUND 85.1 W LON 35.2 N LAT

	YEAR	MONTH	DAY	INTENSITY	LOCATION	NLAT	WLON
1.	1776	Nov	5	IV	Jackson Co.,NC	35.4	83.2
2.	1817	Dec	11	IV	SC-GA	0.0	0.0
3.	1817	Dec	12	<IV	KY	0.0	0.0
4.	1825	Mar	19		Columiba,TN	35.6	87.0
5.	1828	Mar	10	IV	Southwestern VA	0.0	0.0
6.	1829			<IV	Andrews,NC	35.2	83.8
7.	1843	Aug	9	IV	Columbia,TN	35.6	87.0
8.	1844	Jun		<IV	Jackson Co.,NC	35.2	83.1
9.	1844	Nov	28	VI	Knoxville,TN	36.0	83.9
10.	1848			<IV	McDowell Co.,NC	35.7	82.0
11.	1851	Aug	11	V	Asheville,NC	35.6	82.6
12.	1852	Oct	12	<IV	Clinton,GA	33.0	83.5
13.	1852	Oct	23	<IV	Clinton,GA	33.0	83.5
14.	1854	Feb	13	<IV	Manchester,KY	37.2	83.8
15.	1860	Jan	20		NC-SC-GA	0.0	0.0
16.	1872	Jun	17	IV	Milledgeville,GA	33.1	83.2
17.	1874	Feb	22	V	McDowell Co.,NC	35.7	82.1
18.	1875	Jul	29	<IV	Milledgeville,GA	33.1	83.2
19.	1875	Nov	2	IV	Washington, GA	33.7	82.7
20.	1875	Nov	12	<IV	Knoxville,TN	36.0	83.9
21.	1876	Jan	23	<IV	McDowell Co.,NC	35.7	82.0
22.	1877	Apr	26	<IV	Franklin,NC	35.2	83.4
23.	1877	May	25	<IV	Knoxville,TN	36.0	83.9
24.	1877	Jun	3	<IV	Stanford,KY	37.5	84.7
25.	1877	Oct	9	<IV	Hendersonville,NC	35.3	82.5
26.	1877	Nov	16	IV	Knoxville,TN	36.0	83.9
27.	1878	Nov	23	<IV	Murphy,NC	35.1	84.0
28.	1880	Jan	28	<IV	McDowell Co.,NC	35.7	82.0
29.	1882	Oct	15	<IV	Murphy,NC	35.1	84.0
30.	1883	Jan	1	IV	Ashwood,TN	35.6	87.1
31.	1884	Jan		<IV	McDowell Co.,NC	35.7	82.0
32.	1884	Mar	31	<IV	Milledgeville,GA	33.1	83.2
33.	1884	Apr	30	<IV	Ogreeta,NC	35.2	84.2
34.	1884			<IV	Elk Mt.,NC	35.7	82.5
35.	1884	Aug	25	IV	Knoxville,TN	36.0	83.9
36.	1886	Feb	5	IV	Valley Head,AL	34.6	85.6
37.	1888	Mar	17	<IV	Jonesboro,TN	36.3	82.5
38.	1889	Jun	7	IV	Benton Co.,TN	35.9	88.1
39.	1889	Sep	28	<IV	Parksville,TN	35.1	84.6
40.	1892	Dec	2	V	Chattanooga,TN	35.0	85.3
41.	1895	Jul	27		Savannah,TN	35.2	88.3
42.	1898	Mar	30	<IV	Mt. Hermon,KY	36.8	85.8
43.	1898	Jun	6	<IV	Richmond,KY	37.8	84.3
44.	1902	May	29	IV	Chattanooga,TN	35.0	85.3
45.	1902	Oct	18	V	Chattanooga,TN	35.0	85.3
46.	1904	Mar	5	<IV	Maryville,TN	35.8	84.0
47.	1909	Oct	8	<IV	Dalton,GA	34.8	85.0
48.	1911	Apr	22	<IV	Hendersonville,NC	35.3	82.5
49	1912	Oct	23	<IV	Macon,GA	32.8	83.6
50.	1912	Dec	7	<IV	West Springs,SC	34.8	81.8
51.	1913	Jan	1	VII	West Springs,SC	34.8	81.8
52.	1913	Mar	13	<IV	Calhoun,GA	34.5	85.0

Table 2.5.2-1 (Sheet 2)
(Continued)

SEQUOYAH PLANT
HISTORICAL EARTHQUAKE LISTING
200 MILE RADIUS AROUND 85.1 W LON 35.2 N LAT

	YEAR	MONTH	DAY	INTENSITY	LOCATION	NLAT	WLON
53.	1913	Mar	28	VI	Knoxville,TN	36.0	83.9
54.	1913	Apr	17	V	Madisonville,TN	35.5	84.4
55.	1913	May	2	<IV	Madisonville,TN	35.5	84.4
56.	1913	Aug	3	IV	Knoxville,TN	36.0	83.9
57.	1914	Jan	24	IV	Sweetwater,TN	35.6	84.5
58.	1914	Mar	5	IV	Central GA	33.5	84.0
59.	1915	Jan	14	IV	Briston,TN	36.6	82.2
60.	1915	Oct	29	IV	Marshall,NC	35.8	82.7
61.	1916	Feb	21	VII	Waynesville,NC	35.5	83.0
62.	1916	Mar	2	IV	Anderson,SC	34.5	82.7
63.	1916	Oct	18	VII	Irondale,AL	33.5	86.7
64.	1916	Nov	4	IV	Birmingham,AL	33.5	86.8
65.	1917	Jan	2	IV	McMillan,TN	36.6	83.9
66.	1917	Jan	25		Jefferson City,TN	36.1	83.5
67.	1917	Mar	5		Knoxville,TN	36.0	83.9
68.	1917	Mar	27	V	Jefferson City,TN	36.1	83.5
69	1917	Apr	19	<IV	southwestern VA	0.0	0.0
70.	1918	Jan	17	IV	Knoxville,TN	36.0	83.9
71.	1918	Jun	22	IV	Lenoir City,TN	35.8	84.3
72.	1920	Apr	7	II		36.3	88.2
73.	1920	Dec	24	IV	Glen Alice,TN	35.8	84.7
74.	1921	Jul	15	V	Mendota,VA	36.7	82.3
75.	1921	Sep	2	IV	Statesville,TN	36.0	86.1
76.	1921	Dec	15	IV	Glen Alice,TN	35.0	84.7
77.	1922	Mar	30	<IV	Farmington,TN	35.5	86.7
78.	1922	Mar	30	<IV	Arcadia,TN	36.6	82.5
79.	1923	Oct	18	IV	Hendersonville,NC	35.3	82.5
80.	1924	Jan	1	IV	Greenville,SC	34.8	82.4
81.	1924	Oct	20	IV	Pickens,SC	34.9	82.7
82.	1924	Nov	13	V	Bristol,VA	36.6	82.2
83.	1926	Jul	8	VII	McDowell Co.,NC	35.7	82.0
84.	1927	Jun	16	IV	Scottsboro,AL	34.7	86.0
85.	1927	Jul	20	V	Knoxville,TN	36.0	83.9
86.	1927	Oct	8	IV	Chattanooga,TN	35.0	85.3
87.	1928	Mar	7	IV	Columbia,TN	35.6	87.0
88.	1928	Nov	3	VII	Hot Springs,NC	35.9	82.8
89.	1928	Nov	20	IV	Hot Springs,NC	35.9	82.8
90.	1929	Oct	28	IV	Due West,SC	34.3	82.4
91.	1930	Aug	30	V	Kingston,TN	35.9	84.5
92	1930	Oct	16	VI	Knoxville,TN	36.0	83.9
93.	1930	Dec	10		Due West,SC	34.3	82.4
94.	1931	Apr	1		Hopkinsville,KY	36.9	87.5
95.	1931	May	5	VI	Birmingham,AL	33.5	86.8
96.	1931	Nov	27	<IV	Nashville,TN	36.2	86.8
97.	1935	Jan	1	V	GA-NC	35.1	83.6
98.	1936	Jan	1	<IV	Blue Ridge,GA	34.9	84.3
99.	1938	Mar	31	IV	Tapoco,NC	35.5	84.0
100.	1939	May	5	V	Anniston,AL	33.7	85.8
101.	1939	Jun	24	IV	Huntsville,AL	34.7	86.6
102.	1940	Oct	19	IV	Ryall Springs,TN	35.0	85.1
103.	1940	Dec	25	IV	Hot Springs,NC	35.9	82.8
104.	1941	Mar	4	<IV	Rockford,TN	35.9	83.9

Table 2.5.2-1 (Sheet 3)
(Continued)

SEQUOYAH PLANT
HISTORICAL EARTHQUAKE LISTING
200 MILE RADIUS AROUND 85.1 W LON 35.2 N LAT

	YEAR	MONTH	DAY	INTENSITY	LOCATION	NLAT	WLON
105.	1941	May	10	IV	Asheville,NC	35.6	82.6
106.	1941	Sep	8	IV	Lookout Mt.,TN	35.0	85.4
107.	1945	Jun	14	V	Cleveland,TN	35.2	84.9
108.	1946	Apr	7	IV	Cleveland,TN	35.2	84.9
109.	1947	Jun	6	IV	Knoxville,TN	36.0	83.9
110.	1947	Dec	28	IV	Ryall Springs,TN	35.0	85.1
111.	1948	Feb	10	VI	Wells Springs,TN	36.4	84.0
112.	1949	Sep	17	V	Pennington Gap,VA	36.8	83.0
113.	1950	Jun	19	IV	Tapoco,NC	35.5	84.0
114.	1952	Feb	6	V	Birmingham,AL	33.5	86.8
115.	1952	Jun	11	VI	Johnson City,TN	36.3	82.4
116.	1953	Nov	10	IV	Knoxville,TN	36.0	83.9
117.	1953	Dec	5	IV	Knoxville,TN	36.0	83.9
118.	1954	Jan	1	IV	Hazard,KY	37.2	83.2
119.	1954	Jan	2	VI	Hazard,KY	37.2	83.2
120.	1954	Jan	14	IV	Knoxville,TN	36.0	83.9
121.	1954	Jan	23	IV	Etowah,TN	35.3	84.5
122.	1955	Jan	6	IV	Bristol,TN	36.6	82.2
123.	1955	Jan	12	IV	Maryville,TN	35.8	84.0
124.	1955	Jan	25	IV	Knoxville,TN	36.0	83.9
125.	1956	Jan	5	IV	Due West,SC	34.3	82.4
126.	1956	May	19	IV	Due West,SC	34.3	82.4
127.	1956	May	27	IV	Due West,SC	34.3	82.4
128.	1956	Sep	7	VI	Maynardville,TN	36.2	83.8
129.	1956	Sep	9	IV	College Grove,TN	35.8	86.7
130.	1957	Jan	25	IV	Middlesboro,KY	36.6	83.7
131.	1957	Apr	23	VI	Birmingham,AL	33.5	86.8
132.	1957	May	13	VI	McDowell Co.,NC	35.7	82.0
133.	1957	Jun	23	IV	Dixie Lee Junction,TN	35.9	84.2
134.	1957	Jul	2	VI	Asheville,NC	35.6	82.6
135.	1957	Nov	7	<IV	Powell,TN	36.0	84.0
136.	1957	Nov	24	VI	Bryson City,NC	35.4	83.4
137.	1958	May	16	IV	Asheville,NC	35.6	82.6
138.	1958	Oct	20	IV	Anderson,SC	34.5	82.7
139.	1959	Jun	13	IV	Tellico Plains,TN	35.4	84.3
140.	1959	Aug	12	VI	Meridianville,AL	34.8	86.6
141.	1960	Jan	3	IV	Spruce Pine,NC	35.9	82.1
142.	1960	Feb	9	VI	Edneyville,NC	35.4	82.4
143.	1960	Apr	15	IV	Maryville,TN	35.8	84.0
144.	1963	Apr	11	IV	Greenville,SC	34.8	82.4
145.	1963	Nov	14	<IV	Nashville,TN	36.2	86.8
146.	1963	Dec	5	<IV	Beechmont,KY	37.2	87.0
147.	1963	Dec	15	<IV	Beechmont,KY	37.2	87.0
148.	1964	Jan	20	IV	Pensacola,NC	35.8	82.3
149.	1964	Feb	18	V	Mentone,AL	34.6	85.6
150.	1964	Mar	13	IV	Haddock,GA	33.0	83.4
151.	1964	Jul	28	<IV	Inskip,TN	36.0	84.0
152.	1964	Oct	13		Knoxville,TN	36.0	83.9
153.	1965	Apr	7		McCormick,SC	33.9	82.3
154.	1965	Nov	8	<IV	Canton,GA	34.2	84.5
155.	1966	Aug	24	IV	Maryville,TN	35.8	84.0
156.	1969	May	5		GA-SC Border	33.9	82.50

Table 2.5.2-1 (Sheet 4)
(Continued)

SEQUOYAH PLANT
HISTORICAL EARTHQUAKE LISTING
200 MILE RADIUS AROUND 85.1 W LON 35.2 N LAT

	YEAR	MONTH	DAY	INTENSITY	LOCATION	NLAT	WLON
157.	1969	Jul	13	V	Knoxville,TN	36.0	83.9
158.	1969	Jul	24		Knoxville,TN	36.0	83.9
159.	1969	Dec	13	IV	SC-NC Border	35.0	83.0
160.	1971	Jul	13	IV	Kingston,TN	35.9	84.5
161.	1971	Jul	13	VI	Newry,SC	34.7	82.9
162.	1971	Oct	9	V	Gatlinburg,TN	35.7	83.5
163.	1973	Nov	30	VI	Maryville,TN	35.8	84.0
164.	1974	Aug	2	V	McCormick Co., SC	33.9	82.5
165.	1974	Oct	8		Clark Hill Reservoir,SC	34.0	82.3
166.	1974	Nov	5		Clark Hill,SC	33.7	82.2
167.	1974	Dec	3		Mt. Carmel,SC	34.0	82.5
168.	1975	Feb	10		Gatlinburg,TN	35.7	83.5
169.	1975	May	2		Oakdale,TN	36.0	84.6
170.	1975	May	14		Oak Ridge,TN	36.0	84.3
171.	1975	Jun	24	IV	Fayette,AL	33.7	87.8
172.	1975	Aug	29	VI	Palmerdale,AL	33.8	86.6
173.	1975	Oct	18	IV	Jocassee Lake Dam,SC	34.9	83.0
174.	1975	Nov	7		Samantha,AL	33.4	87.6
175.	1975	Nov	25	IV	Salem,SC	34.9	83.0
176.	1976	Jan	19	VI	Knox Co.,KY	36.9	83.8
177.	1976	Feb	4	VI	Conasauga,TN	35.0	84.7
178.	1976	Apr	15	V	Sacramento,KY	37.4	87.3
179.	1977	Jul	27	V	Athens,TN	35.4	84.6
180.	1978	Mar	1	III	near Huntsville,AL	34.4	86.6
181.	1978	Oct	27		near Jasper,AL	33.8	87.5
182.	1979	Jan	19	IV	Newry,SC	34.7	82.9
183.	1979	Aug	13	V	near Cleveland,TN	35.2	84.4
184.	1979	Aug	26	VI	Tamasee,SC	34.9	83.1
185.	1979	Sep	12	V	Maryville,TN	35.8	84.0
186.	1980	Mar	23	IV	Narrows,KY	37.6	86.7
187.	1980	Apr	21		Maryville,TN	35.8	84.0
188.	1980	Jun	25	IV	Maryville,TN	35.8	84.0
189.	1980	Jul	12	III	near Horse Branch,KY	37.3	87.0

Table 2.5.2-1 (Sheet 5)
(Continued)

SEQUOYAH PLANT
HISTORICAL EARTHQUAKE LISTING
200 MILE RADIUS AROUND 85.1 W LON 35.2 N LAT

	YEAR	MONTH	DAY	INTENSITY	LOCATION	NLAT	WLON
87.	1928	Mar	7	IV	Columbia,TN	35.6	87.0
7.							
11.				IV			
92.	1930	Oct	16	VI	Knoxville,TN	36.0	83.9
13.				VI			
26.				<IV			
29.				<IV			
32.				IV			
41.				IV			
59.				VI			
62.				IV			
73.							
76.				IV			
92.				V			
116.				IV			
123.				IV			
124.				IV			
127.				IV			
131.				IV			
159.							
164.				V			
165.							
83.	1926	Jul	8	VII	McDowell Co.,NC	35.7	82.0
15.				<IV			
27.				<IV			
34.				<IV			
37.				<IV			
139.				VI			
134.	1957	Jul	2	VI	Asheville,NC	35.6	82.6
16.				V			
112.				IV			
144.				IV			
13.	1852	Oct	23	<IV	Clinton,GA	33.0	83.5
17.				<IV			
16.	1872	Jun	17	IV	Milledgeville,GA	33.1	83.2
24.				<IV			
38.				<IV			
79.	1923	Oct	18	IV	Hendersonville,NC	35.3	82.5
31.				<IV			
54.				<IV			
29.	1882	Oct	15	<IV	Murphy,NC	35.1	84.0
33.				<IV			
149.	1964	Feb	18	V	Mentone,AL	34.6	85.6
42.				IV			
45.	1902	Oct	18	V	Chattanooga,TN	35.0	85.3
46.				V			
50.				IV			
93.				IV			
163.	1973	Nov	30	VI	Maryville,TN	35.8	84.0
52.				<IV			
130.				IV			
150.				IV			

Table 2.5.2-1 (Sheet 6)
(Continued)

SEQUOYAH PLANT
HISTORICAL EARTHQUAKE LISTING
200 MILE RADIUS AROUND 85.1 W LON 35.2 N LAT

	YEAR	MONTH	DAY	INTENSITY	LOCATION	NLAT	WLON
162.				IV			
192.				V			
194.							
195.				IV			
51.	1913	Jan	1	VII	West Springs,SC	34.8	81.8
56.				<IV			
54.	1913	Apr	17	V	Madisonville,TN	35.5	84.4
61.				<IV			
82.	1924	Nov	13	V	Bristol,VA	36.6	82.2
65.				IV			
129.				IV			
138.	1958	Oct	20	IV	Anderson,SC	34.5	82.7
68.				IV			
131.	1957	Apr	23	VI	Birmingham,AL	33.5	86.8
70.				IV			
102.				VI			
121.				V			
68.	1917	Mar	27	V	Jefferson City,TN	36.1	83.5
72.							
177.	1976	Feb	4	VI	Conasauga,TN	35.0	84.7
82.				IV			
144.	1963	Apr	11	IV	Greenville,SC	34.8	82.4
87.				IV			
88.	1928	Nov	3	VII	Hot Springs,NC	35.9	82.8
96.				IV			
110.				IV			
127.	1956	May	27	IV	Due West,SC	34.3	82.4
97.				IV			
100.							
132.				IV			
133.				IV			
91.	1930	Aug	30	V	Kingston,TN	35.9	84.5
167.				IV			
145.	1963	Nov	14	<IV	Nashville,TN	36.2	86.8
103.				<IV			
113.	1950	Jun	19	IV	Tapoco,NC	35.5	84.0
106.				IV			
110.	1947	Dec	28	IV	Ryall Springs,TN	35.0	85.1
109.				IV			
107.	1945	Jun	14	V	Cleveland,TN	35.2	84.9
115.				IV			
119.	1954	Jan	2	VI	Hazard,KY	37.2	83.2
125.				IV			
151.	1964	Jul	28	<IV	Inskip,TN	36.0	84.0
142.				<IV			
147.	1963	Dec	15	<IV	Beechmont,KY	37.2	87.0
153.				<IV			
164.	1974	Aug	2	V	McCormick Co.,SC	33.9	82.5
163.							
161.	1971	Jul	13	VI	Newry,SC	34.7	82.9
189.				IV			
162.	1971	Oct	9	V	Gatlinburg,TN	35.7	83.5
175.	1975	Nov	25	IV	Salem,SC	34.9	83.0
180.				IV			

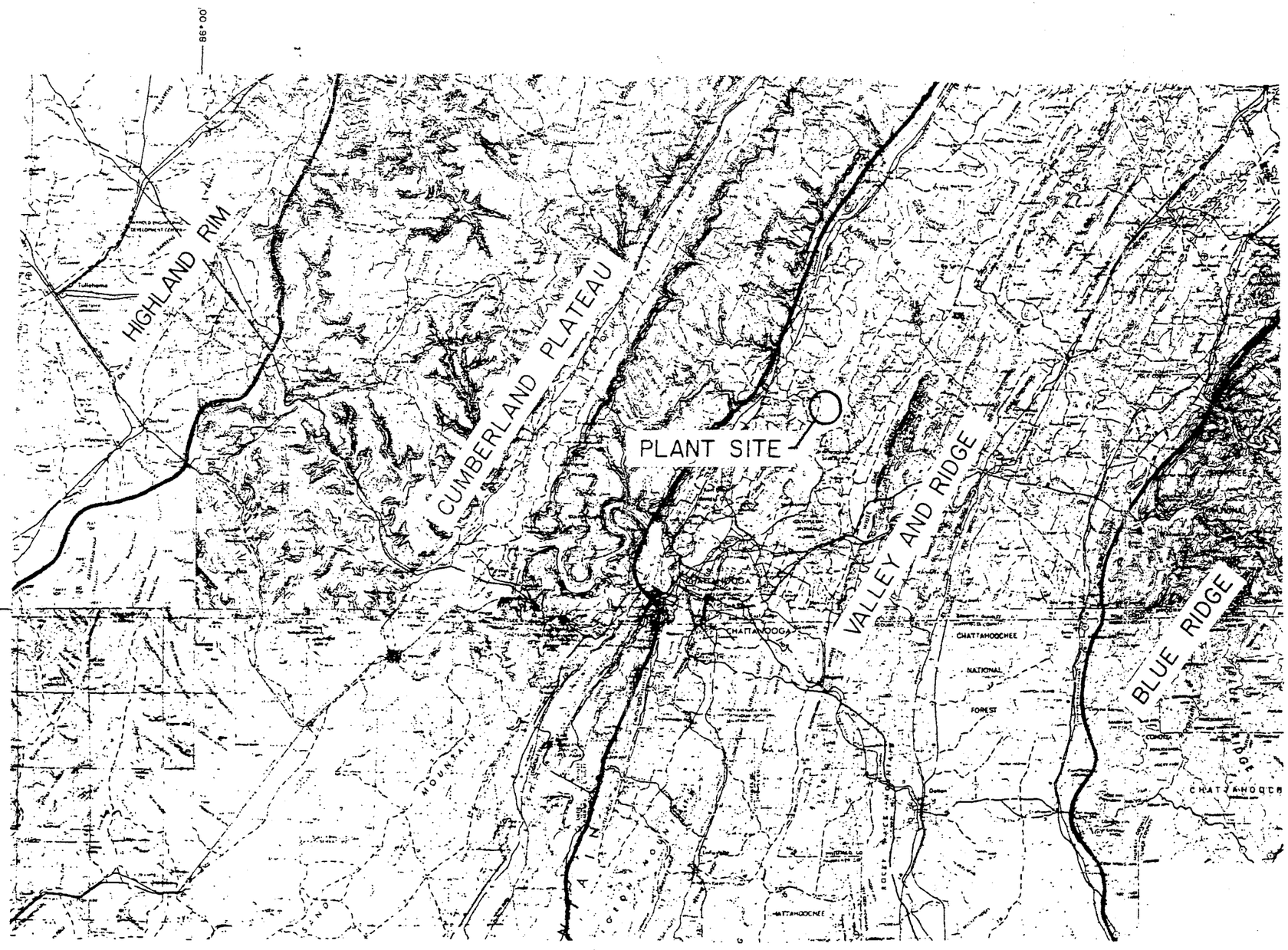

Figure 2.5.1-1 Physiographic Map of Plant Area (464K33)

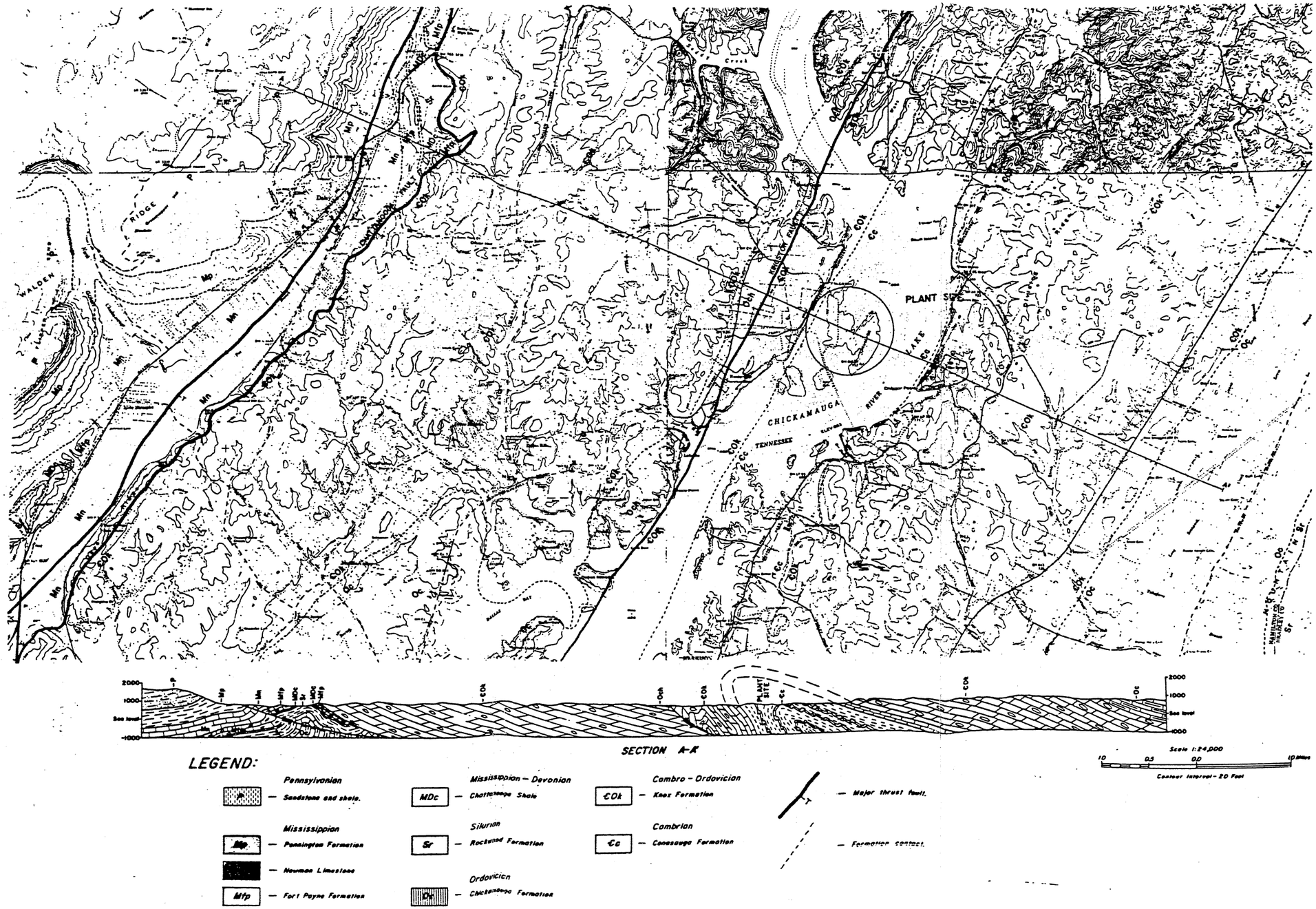

FIGURE 2.5.1-2 Geologic and Tectonic Map of Plant Area

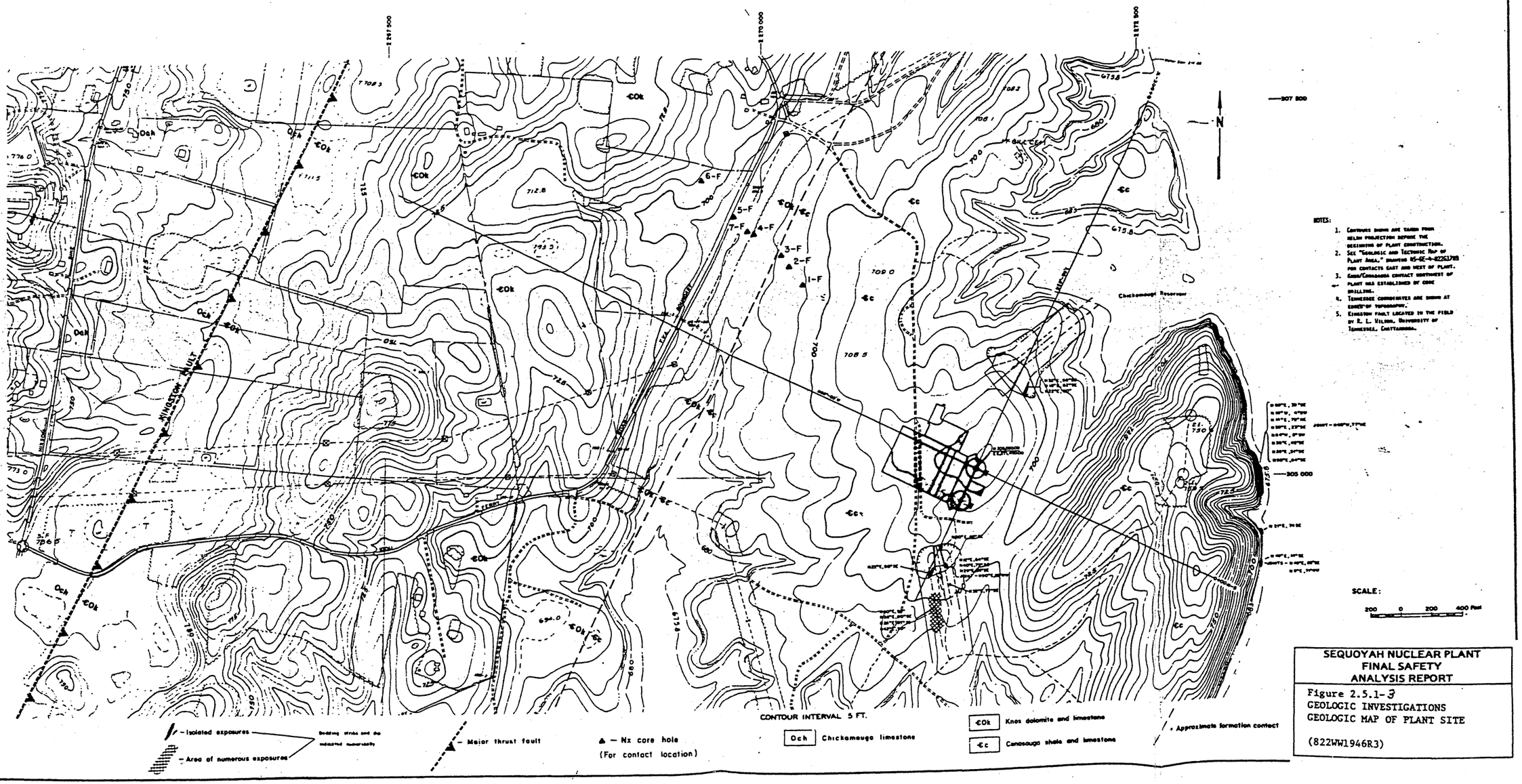
NOTES:
1. Contours shown are taken from helium projection before the beginning of plant construction.
2. See "Geologic and Tectonic Map of Plant Area," Drawing 85-GE-4-822G1785 for contacts east and west of plant.
3. Knox/Chickamauga contact northwest of plant was established by core drilling.
4. Tennessee coordinates are shown at ends of topography.
5. Kingston fault located in the field by R. L. Wilson, University of Tennessee, Chattanooga.
N
SCALE:
200 0 200 400 Feet
CONTOUR INTERVAL 5 FT.
Isolated exposures
Area of numerous exposures
Bedding strike and dip indicated numerically
Major thrust fault
Nx core hole (For contact location)
Och Chickamauga limestone
€Ok Knox dolomite and limestone
€c Conasauga shale and limestone
Approximate formation contact
Kingston Fault
Chickamauga Reservoir
SEQUOYAH NUCLEAR PLANT
FINAL SAFETY
ANALYSIS REPORT
Figure 2.5.1-3
GEOLOGIC INVESTIGATIONS
GEOLOGIC MAP OF PLANT SITE
(822WW1946R3)

SEISMIC PROFILE

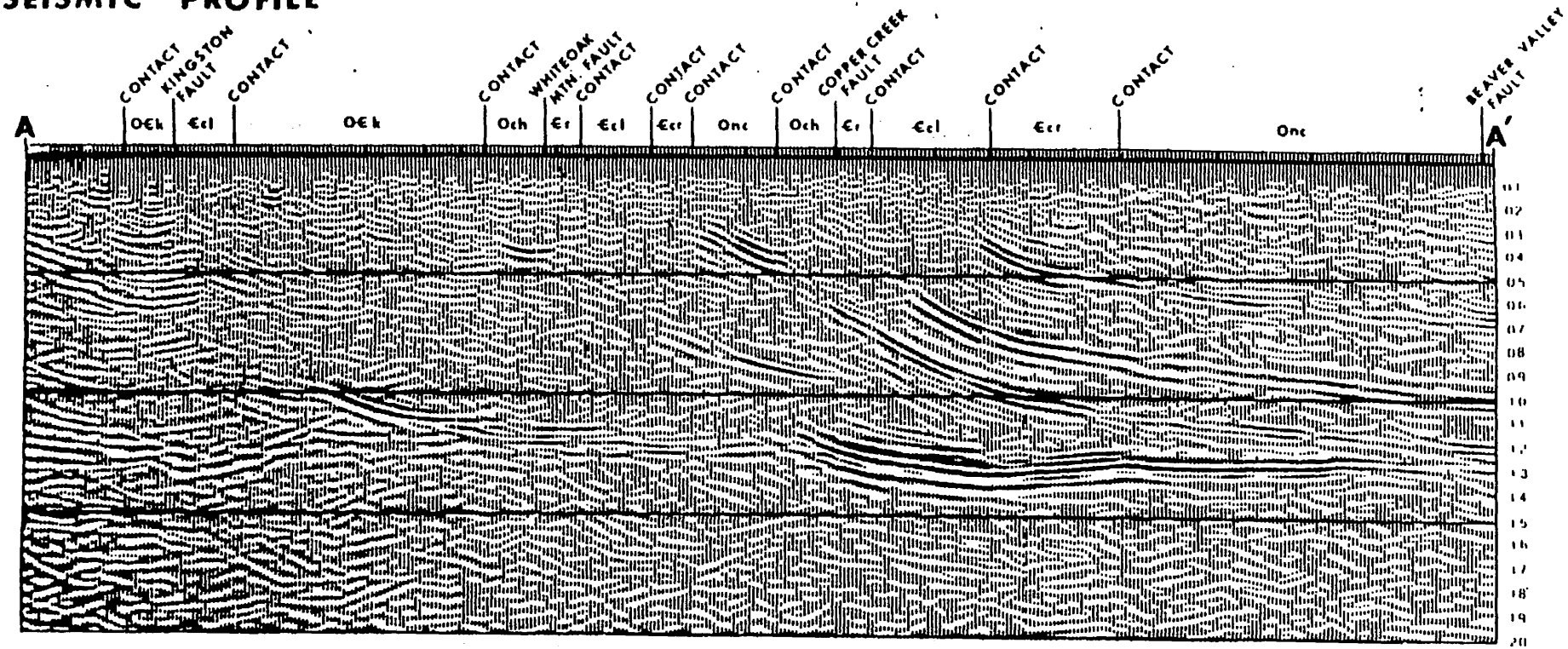

Data from Geophysical Services Inc

INDEX MAP

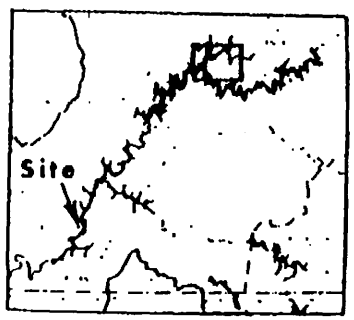

LOCATION MAP

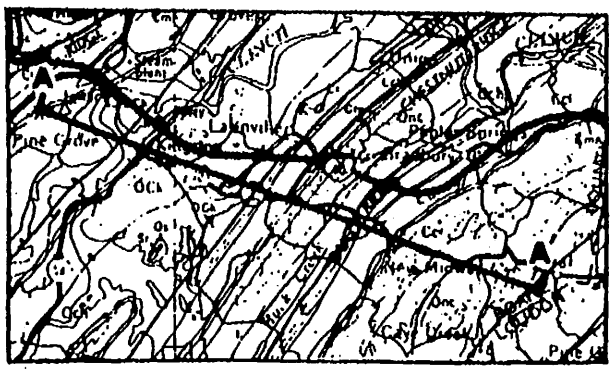

From Haideman 1966

SEQUOYAH NUCLEAR PLANT
FINAL SAFETY
ANALYSIS REPORT

Figure 2.5.1-4
VALLEY AND RIDGE PROVINCE
SEISMIC REFLECTION PROFILE
(822A2128)

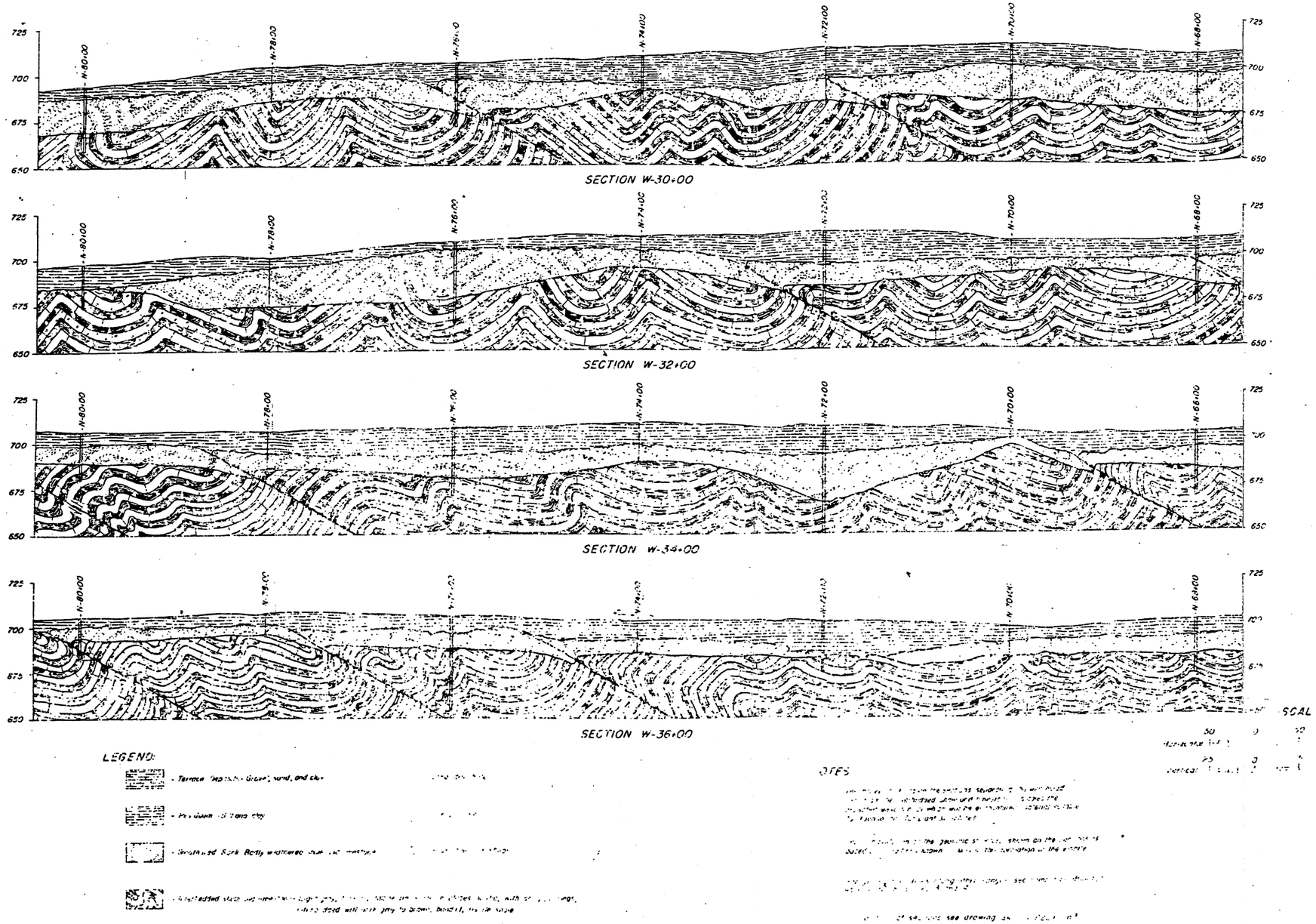

Figure 2.5.1-5 Geologic Sections W-30+00 through W-36+100 (822K1180-1)

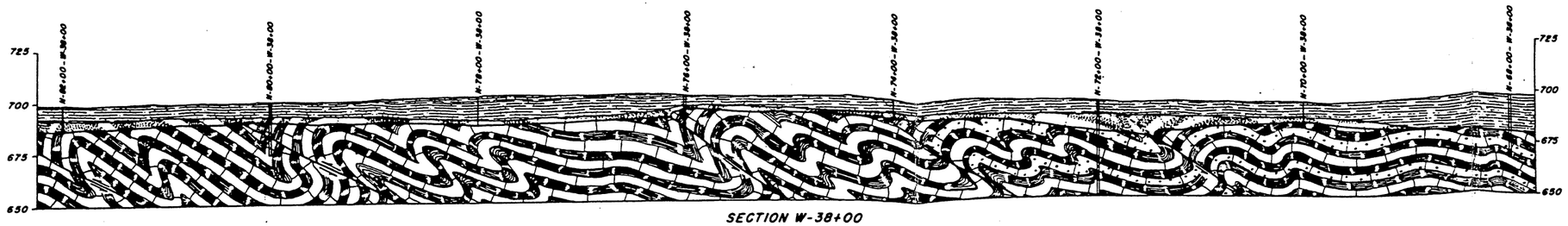

SECTION W-38+00

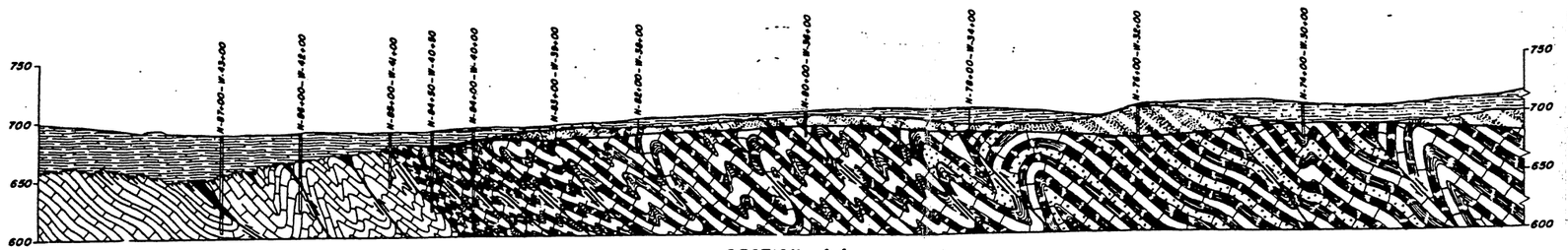

SECTION A-A

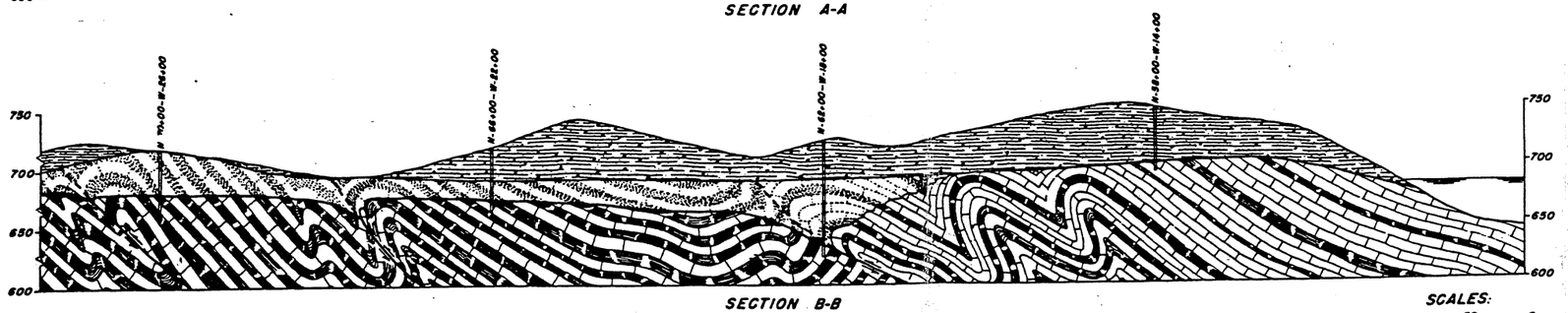

SECTION B-B

LEGEND:

- Terrace Deposits - Gravel, sand, and clay.
- Residuum - Silt and clay.
- Weathered Rock - Badly weathered shale and limestone.
- Interbedded shale and limestone - Light gray, fine crystalline limestone, in places oolitic, with shaly partings interbedded with dark gray to brown, banded, fissile shale.
- Limestone - Light gray, dense to fine crystalline limestone with shaly partings, usually brecciated and contorted.
- Core drill hole.
- Fishtail hole.
- Thrust fault or shear

NOTES:

The heavy solid line on the sections separating the weathered rock from the interbedded shale and limestone indicates the expected elevation at which will be encountered material suitable for foundations for plant structures.

The interpretation of the geologic structure shown on the sections is based on conditions known to exist in these formations in the vicinity.

For geologic sections along other ranges see companion drawings 45 6E 1 822 K1180-1, -3, and -4

For location of sections see drawing 45 PP1 822 K 1183

SCALES:

50 0 50 100
Horizontal
25 0 25 50
Vertical
Section W-38+00

100 0 100 200
Horizontal
50 0 50 100
Vertical
Sections A-A & B-B

SEQUOYAH NUCLEAR PLANT
FINAL SAFETY
ANALYSIS REPORT

FIGURE 2.5.1-6
GELOGIC SECTIONS W-38+00,
AA, AND B-B
(822K1180-2)

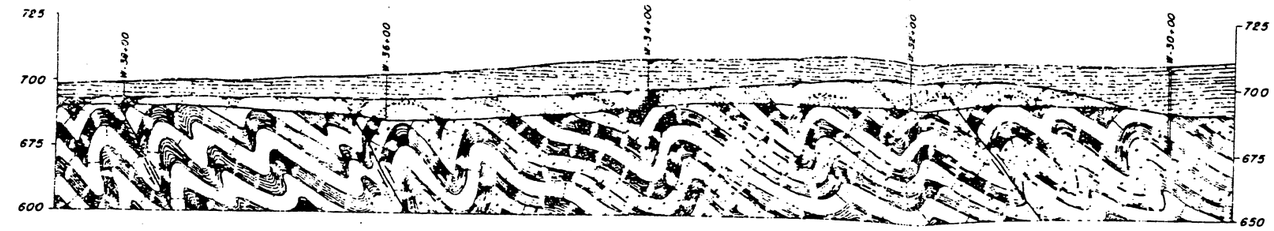

SECTION N-74+00

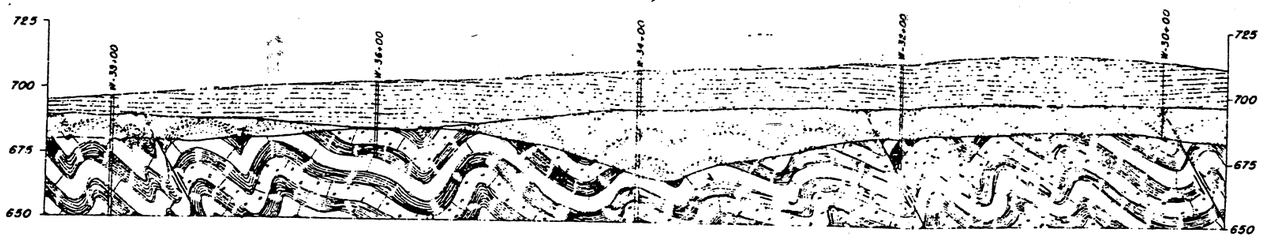

SECTION N-72+00

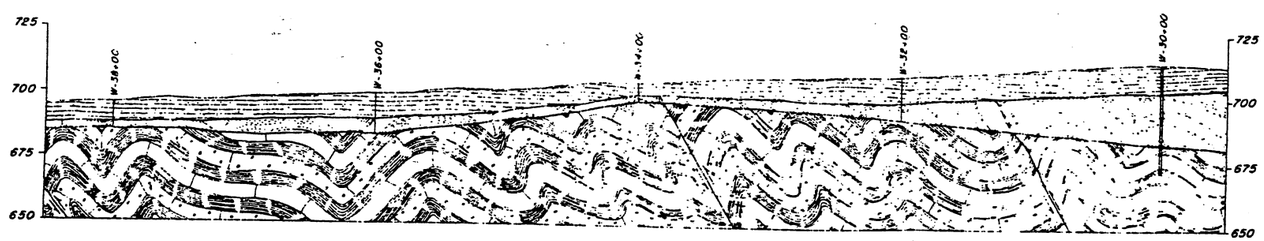

SECTION N-70+00

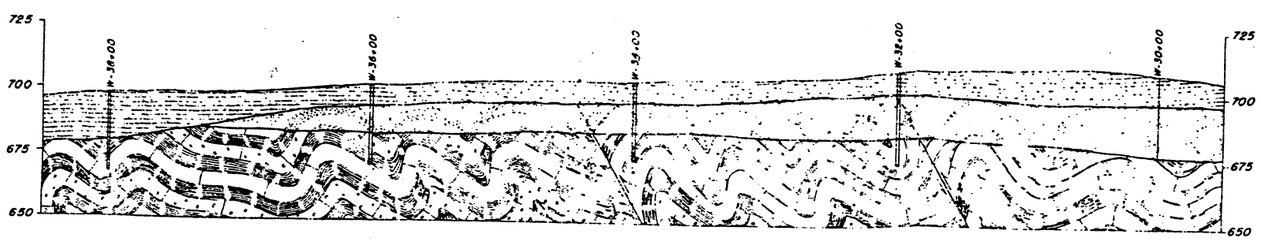

SECTION N-68+00

LEGEND:

- Residuum - Silt and clay
- Weathered Rock - Weathered shale and limestone.
- Interbedded shale and limestone - Light gray, fine crystalline limestone, in places oolitic, with shaly partings interbedded with dark gray to brown, banded, fissile shale
- Core drill hole
- Fishtail hole.
- Thrust fault or shear

NOTES:

The heavy solid line on the sections separating the weathered rock from the interbedded shale and limestone indicates the expected elevation at which will be encountered material suitable for foundations for plant structures.

The interpretation of the geologic structure shown on the sections is based on conditions known to exist in these formations in the vicinity.

For geologic sections along other ranges see companion drawings 45 GE I 822K1180-1, -2, and -4

For location of sections see drawing 45 PP I 822K1183

SCALE:

Horizontal 50 0 50 100 Feet

Vertical 25 0 25 50 Feet

Figure 2.5.1-7 Geologic Sections N-68+00 through N-74+00 (822K1180-3)

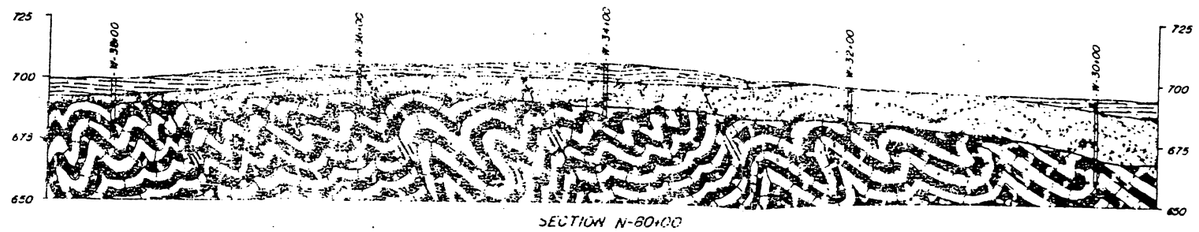

SECTION N-80+00

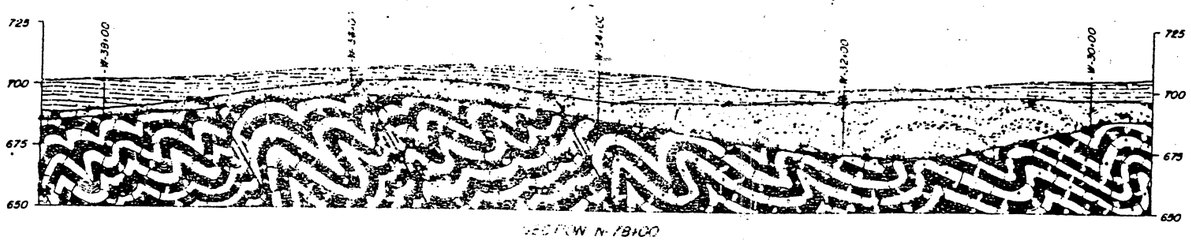

SECTION N-78+00

SECTION N-76+00

LEGEND

NOTES

The heavy solid line on the section separating the weathered rock from the interbedded shale and limestone indicates the expected elevation at which will be encountered material suitable for foundations for plant structures

The interpretation of the geologic structure shown on the sections is based on conditions known to exist in this formation in the vicinity

For geologic sections along other ranges see companion drawings 45 56 - 822 K 1180-1, -2, and -3

For location of sections see drawing 45 56 - 822 K 1183

SCALE

Horizontal: 50 0 50 100 Feet

Vertical: 25 0 25 50 Feet

Figure 2.5.1-8 Geologic Sections N-76+00 through N-80+00 (822K1180-4)

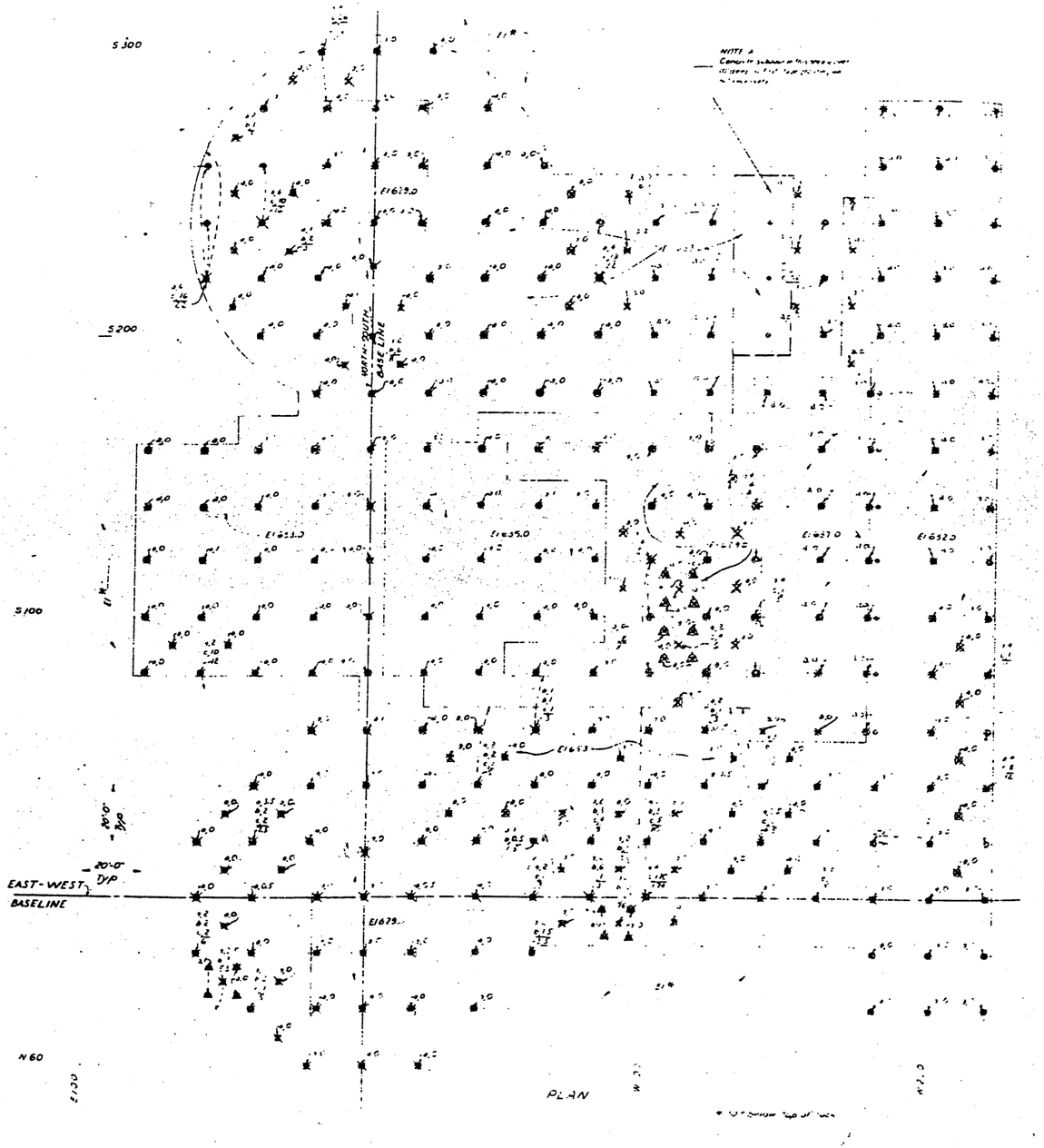

NOTES:

1. All foundation grouting shall be in accordance with Construction Specification G-26 and under the direction of TVA Geologic Branch.
2. Drill grout holes as shown on PLAN.
3. Field shall prepare the record of results for this foundation grouting program.
4. For fill concrete cap and top elevation of each group of holes see #41Tol-1 and 1ol-2.
5. Hole spacing shall be split if more than four bags of cement are required in addition to amount necessary to fill hole. These secondary holes shall be drilled on the grid shown on the 10ol-2.
6. Grouting shall be done with a maximum pressure of 10psi at the header.
7. Initial grout mixes shall have a 3 : water-cement ratio which may be thickened as field conditions demand.
8. Elevations shown on plan indicates bottom elevation of grout holes.

LEGEND:

Primary grout hole	0.1 = bag 3.1 lms.
Secondary grout hole	0.2 = bags 1.1 lms.
Completed grout hole	1.1 = bag = .75 lms
Grouted to refusal	4 = bags, total grout take
Connecting grout holes	1" size of Lumnite
Third series hole	

Figure 2.5.1-9 Foundation Treatment First Stage Grouting (41N10701)

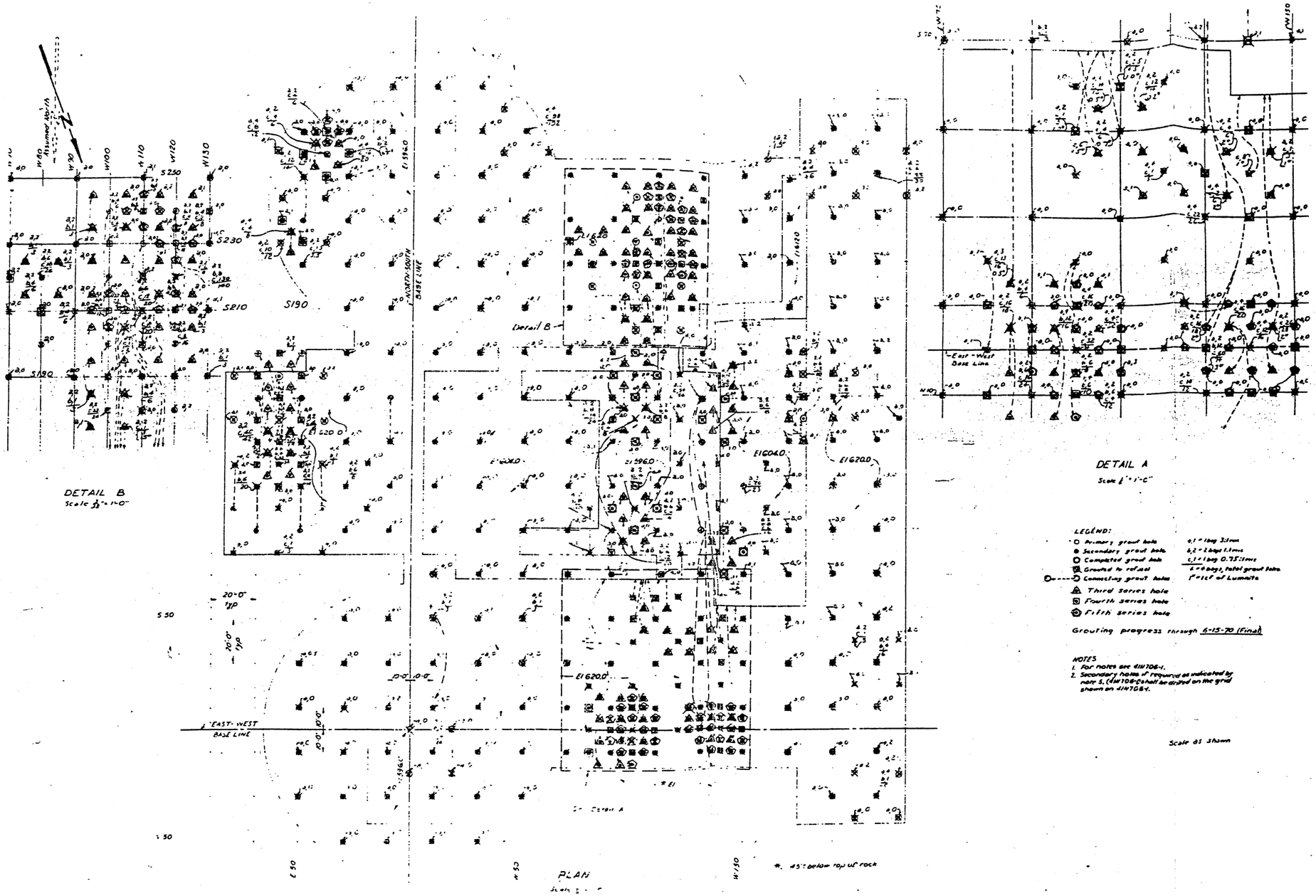

Figure 2.5.1-10 Foundation Treatment Second Stage Grouting (41N10702)

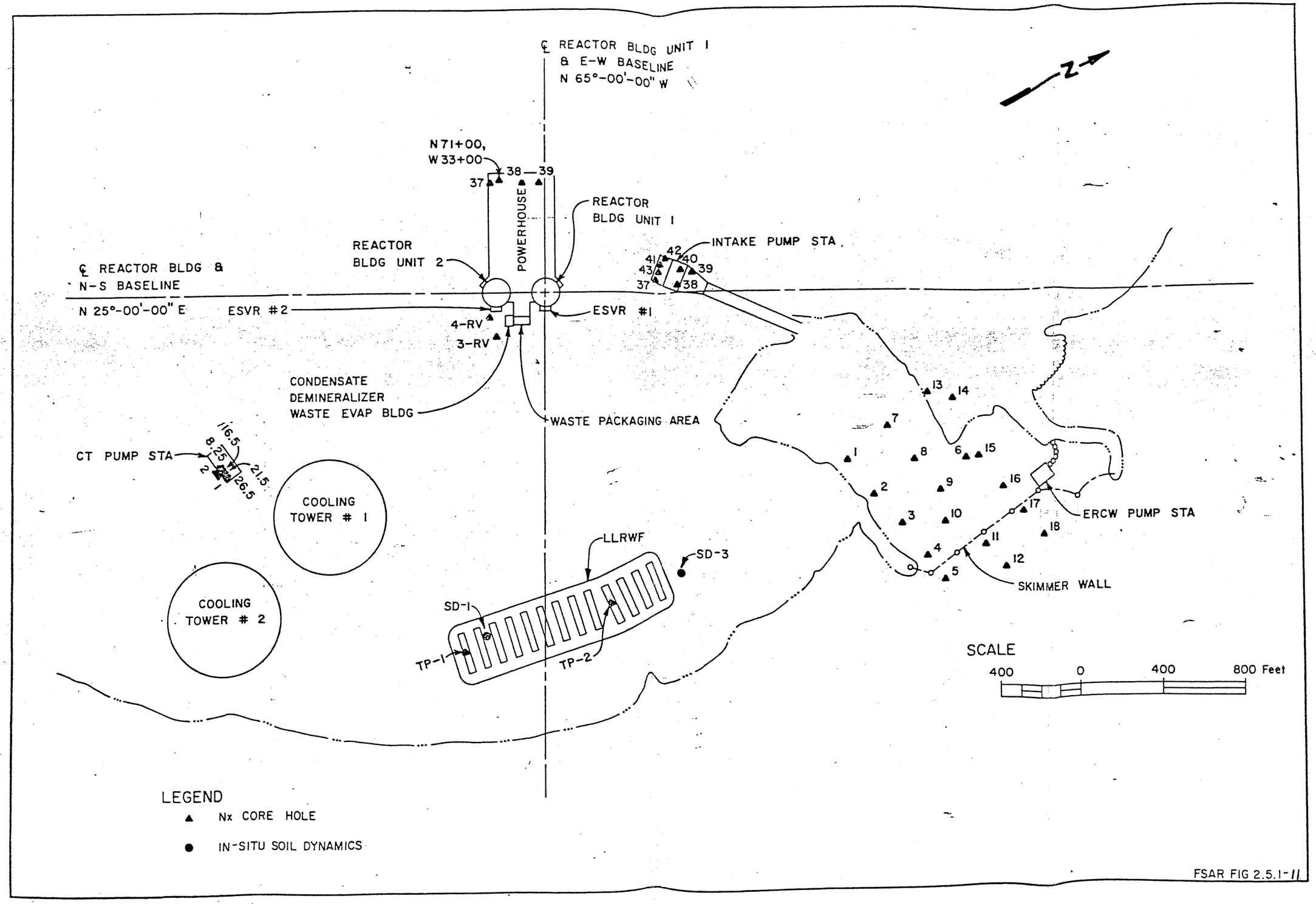

FSAR FIG 2.5.1-11

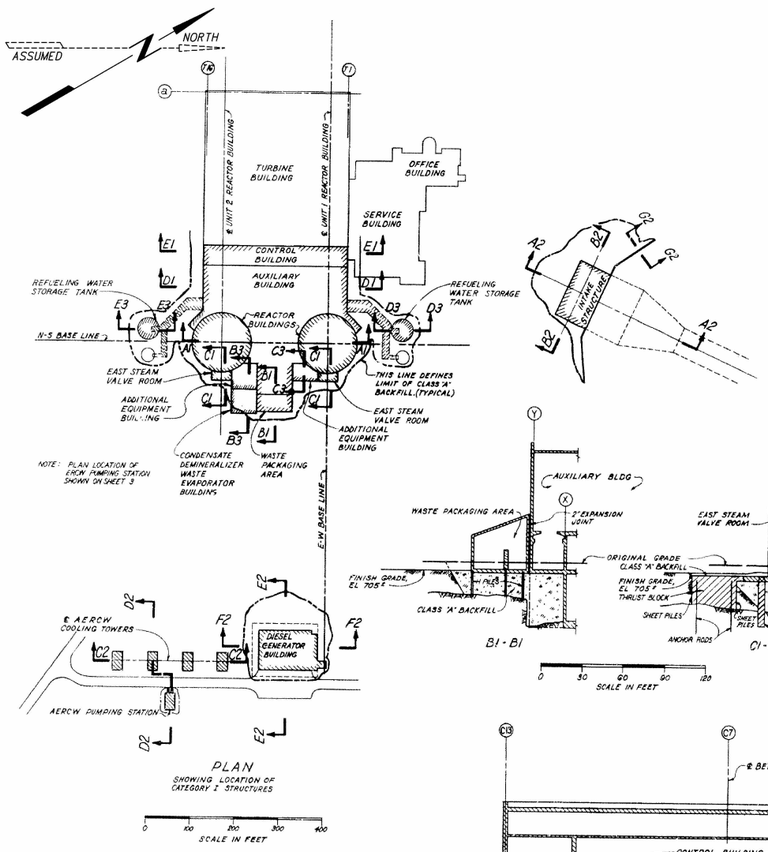

NOTE: PLAN LOCATION OF ERCW PUMPING STATION SHOWN ON SHEET 3

PLAN
SHOWING LOCATION OF CATEGORY I STRUCTURES

0 100 200 300 400
SCALE IN FEET

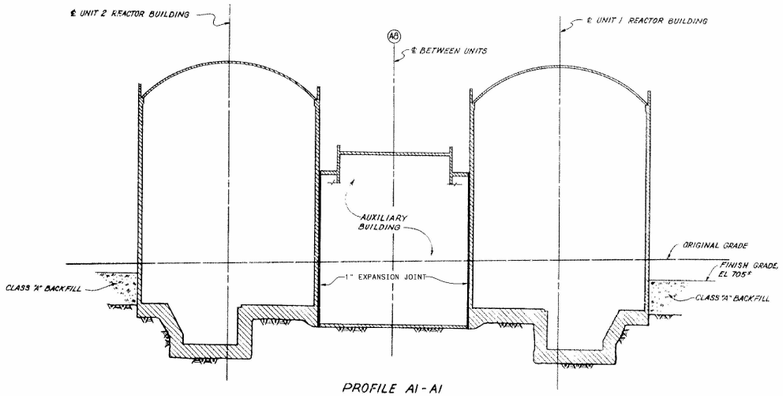

PROFILE A1-A1
0 30 60 90 120
SCALE IN FEET

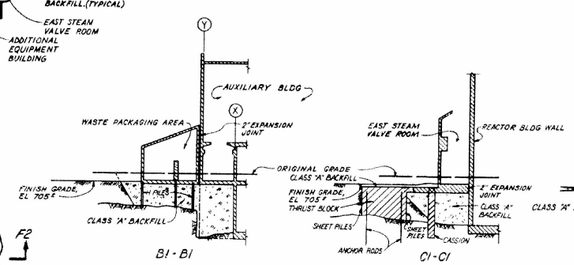

B1-B1
0 30 60 90 120
SCALE IN FEET

C1-C1

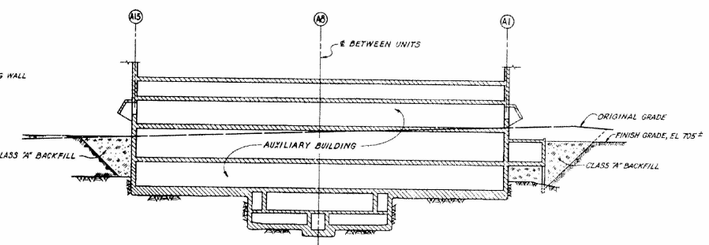

D1-D1
0 30 60 90 120
SCALE IN FEET

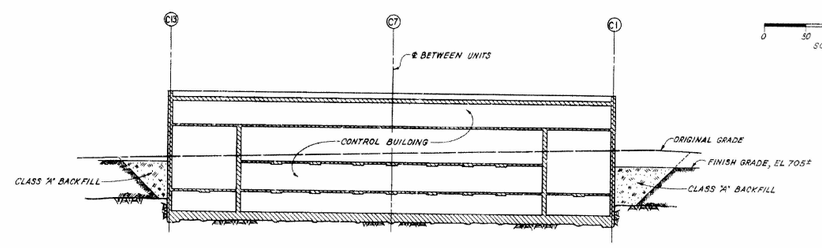

E1-E1
0 30 60 90 120
SCALE IN FEET

DENOTES CATEGORY I STRUCTURES.
DENOTES SOUND ROCK.
DENOTES EXISTING EARTH.
DENOTES CRUSHED STONE

NOTE:
1. THE AERCW COOLING TOWERS ARE NOT REQUIRED AND THE SUPERSTRUCTURES ARE REMOVED. THE AERCW COOLING TOWER FOUNDATIONS ARE ABANDONED IN PLACE.

SEQUOYAH NUCLEAR PLANT
FINAL SAFETY
ANALYSIS REPORT

FIGURE 2.5.1-12
(REVISED BY AMENDMENT 23)

SCALE: NONE — EXCEPT AS NOTED

MAIN PLANT
UNITS 1 & 2

EXCAVATION AND BACKFILL CATEGORY I STRUCTURES SHEET 1

SEQUOYAH NUCLEAR PLANT
TENNESSEE VALLEY AUTHORITY

INITIAL ISSUE	ENGINEERING APPROVAL	
RO ISSUE PER: DRAWING MADE A CCD FROM AND SUPERSEDES AD-RO. INC: DCA-M13132-330 RO PER DCN M13132. INC: ADMIN CHANGE PER RIMS: B85 110413 001. INC: ADMIN CHANGE TO ADD FSAR FIGURE NUMBER PER PLANT LICENSING REQUEST.	1	D.G.ROOP
	2	D.M.DEAN
	3	R.E.GRIFFITH

CCD | ISSUE DATE 9-21-11 | 45 | C | 1,2-10SN38 | RO

FSAR FIGURE 2.5.1-12

CAD MAINTAINED DRAWING

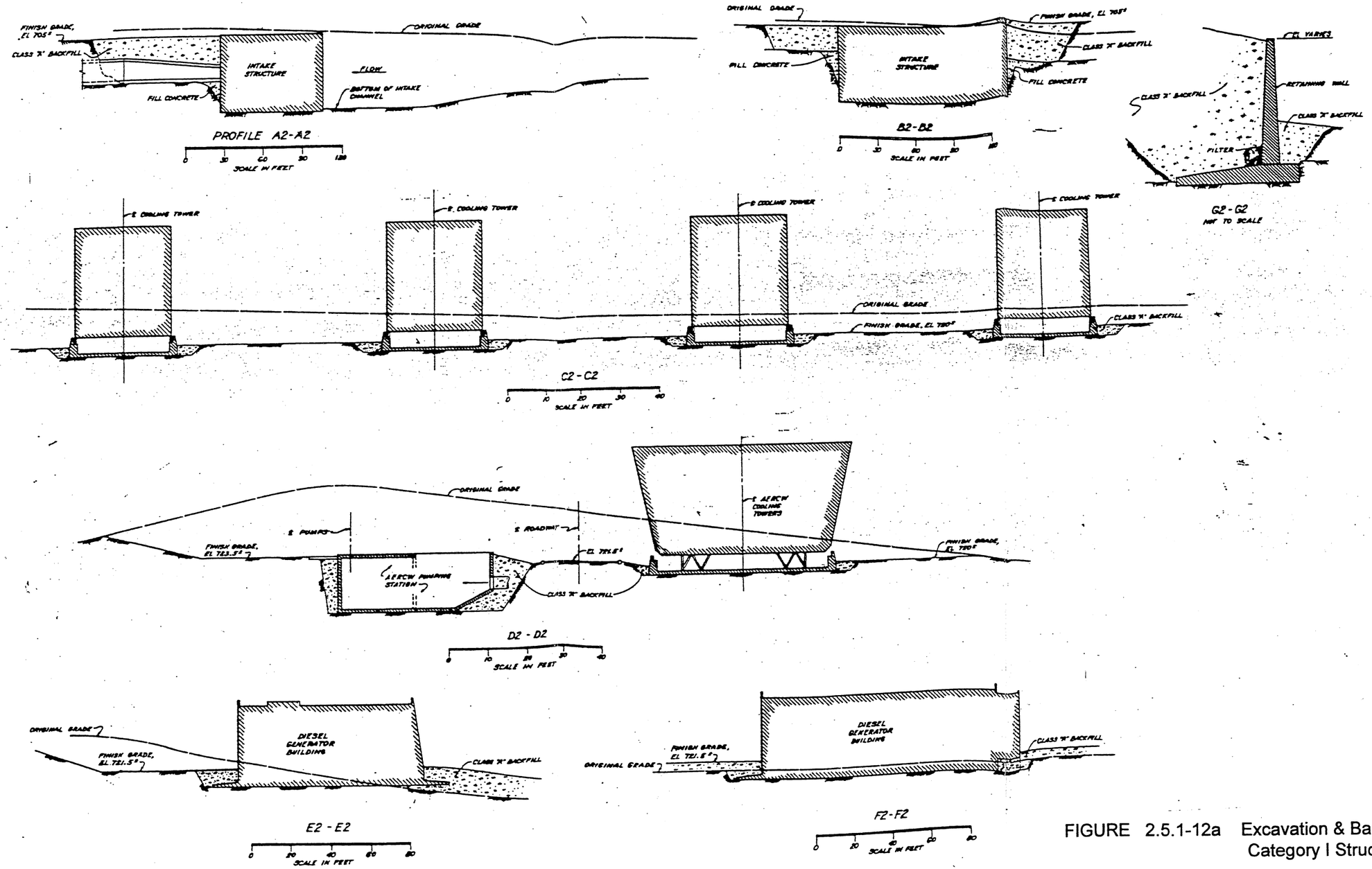

FIGURE 2.5.1-12a Excavation & Backfill Category I Structures

Revised by Amendment 13

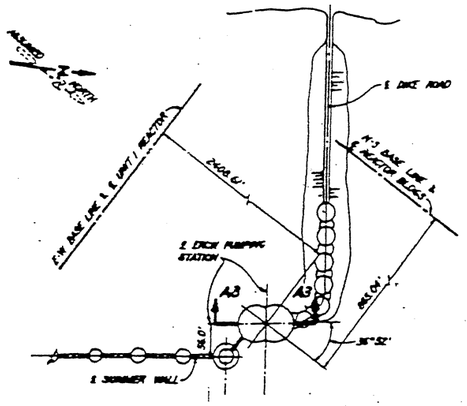

KEY PLAN
SCALE: 1" = 100'

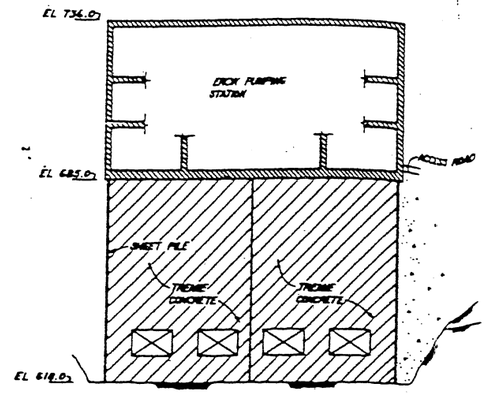

A3-A3
0 10 20 30 40
SCALE IN FEET

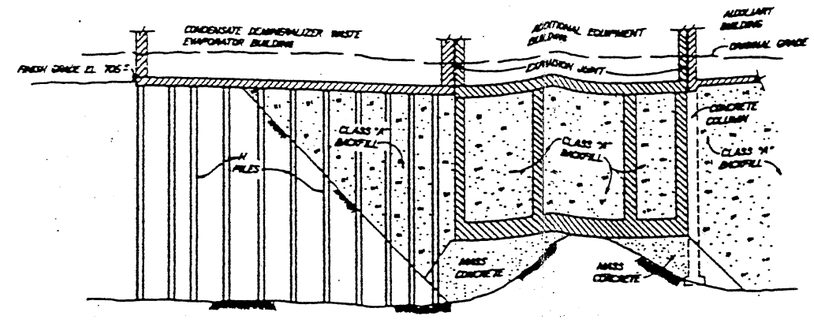

B3-B3
0 10 20 30 40
SCALE IN FEET

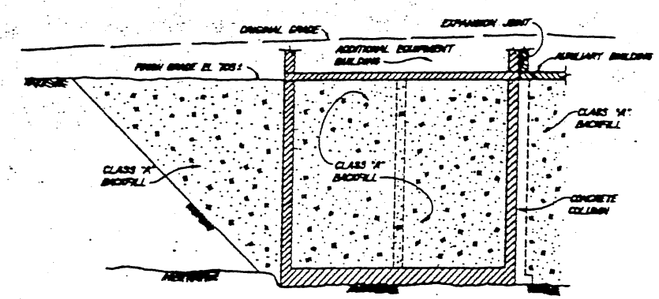

C3-C3
0 10 20 30 40
SCALE IN FEET

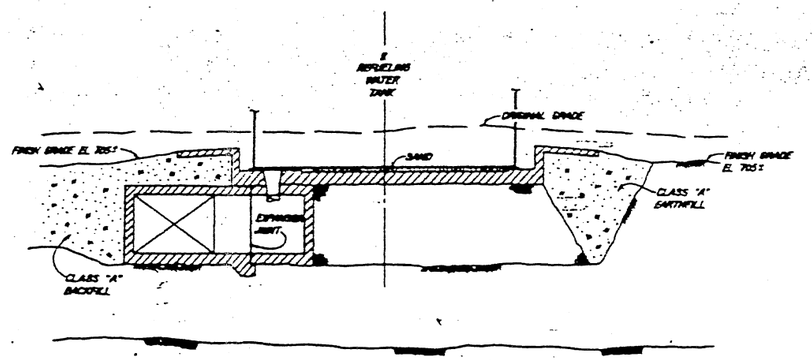

D3-D3 & E3-E3
E3-E3 OPP HAND
0 10 20 30 40 50
SCALE IN FEET

DENOTES CATEGORY I STRUCTURES
DENOTES SOUND ROCK
DENOTES EXISTING EARTH
DENOTES CRUSHED STONE

SEQUOYAH NUCLEAR PLANT
FINAL SAFETY
ANALYSIS REPORT

EXCAVATION AND BACKFILL
CATEGORY I STRUCTURES
SHEET 3

FIGURE 2.5.1-12b

Revised by Amendment 13

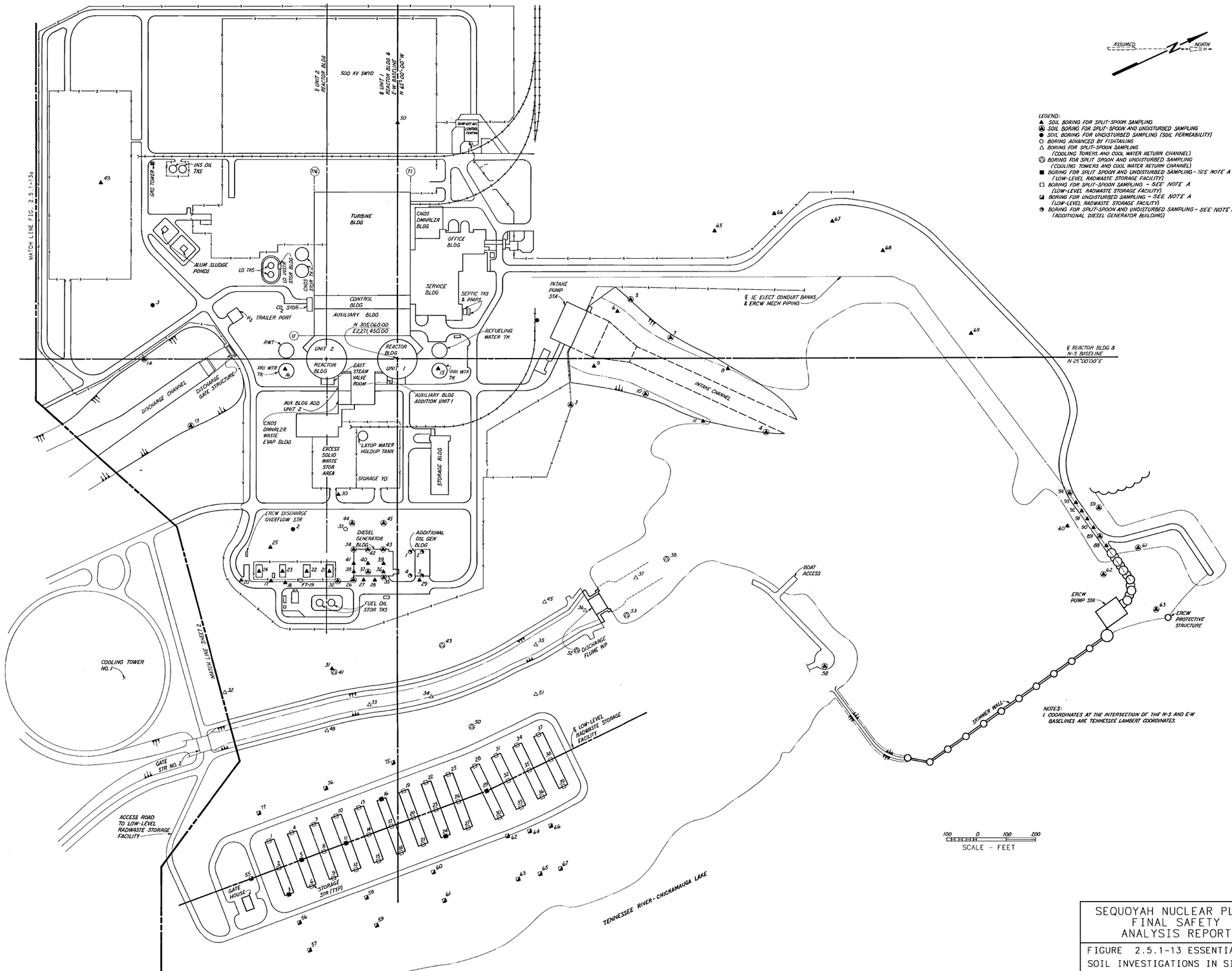

NOTES:
1. COORDINATES AT THE INTERSECTION OF THE N-S AND E-W BASELINES ARE TENNESSEE LAMBERT COORDINATES.

SEQUOYAH NUCLEAR PLANT
FINAL SAFETY
ANALYSIS REPORT

FIGURE 2.5.1-13 ESSENTIAL SOIL INVESTIGATIONS IN SITU

(REVISED BY AMENDMENT 13)

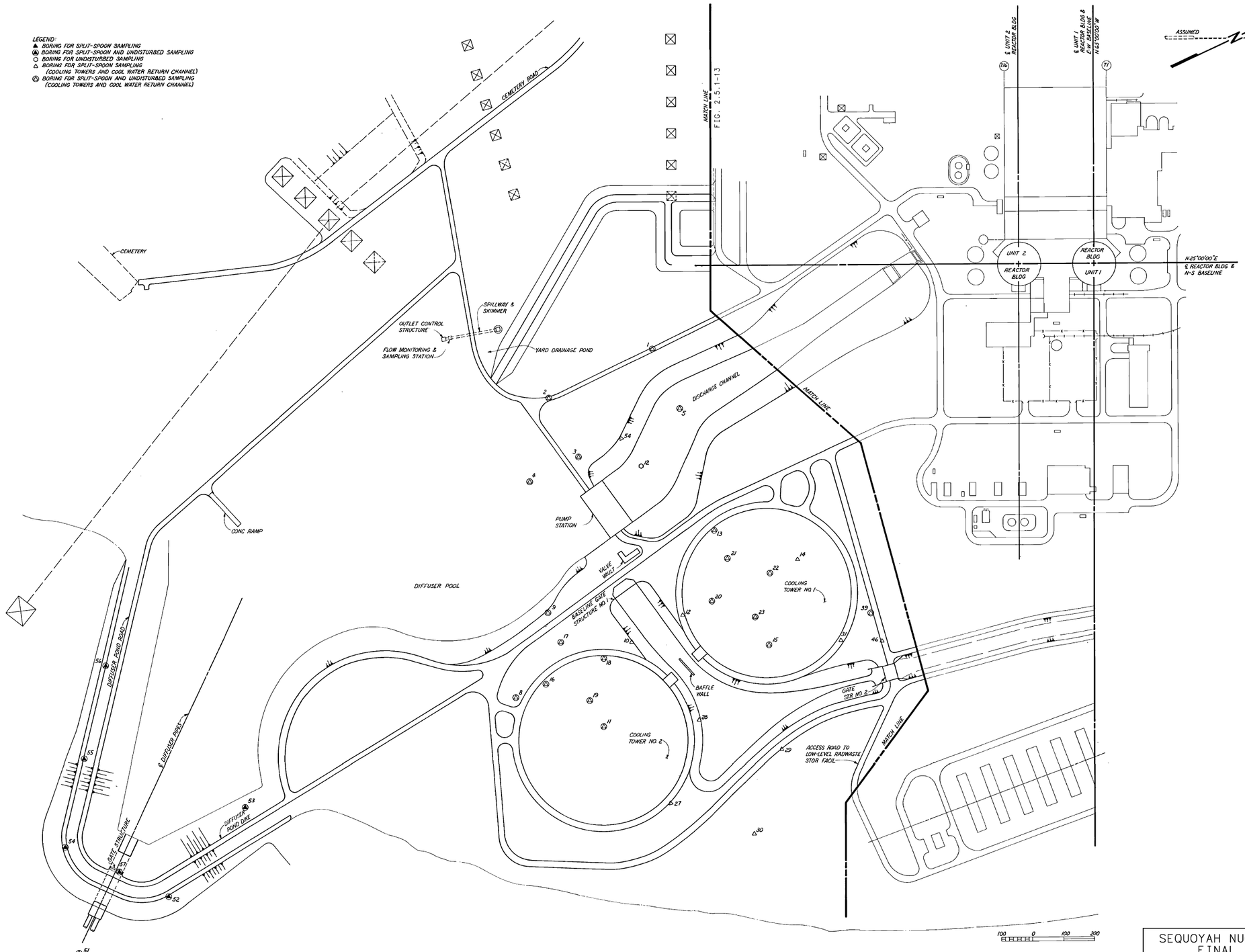

SEQUOYAH NUCLEAR PLANT
FINAL SAFETY
ANALYSIS REPORT

FIGURE 2.5.1-13a ESSENTIAL SOIL INVESTIGATIONS IN SITU

(REVISED BY AMENDMENT 13)

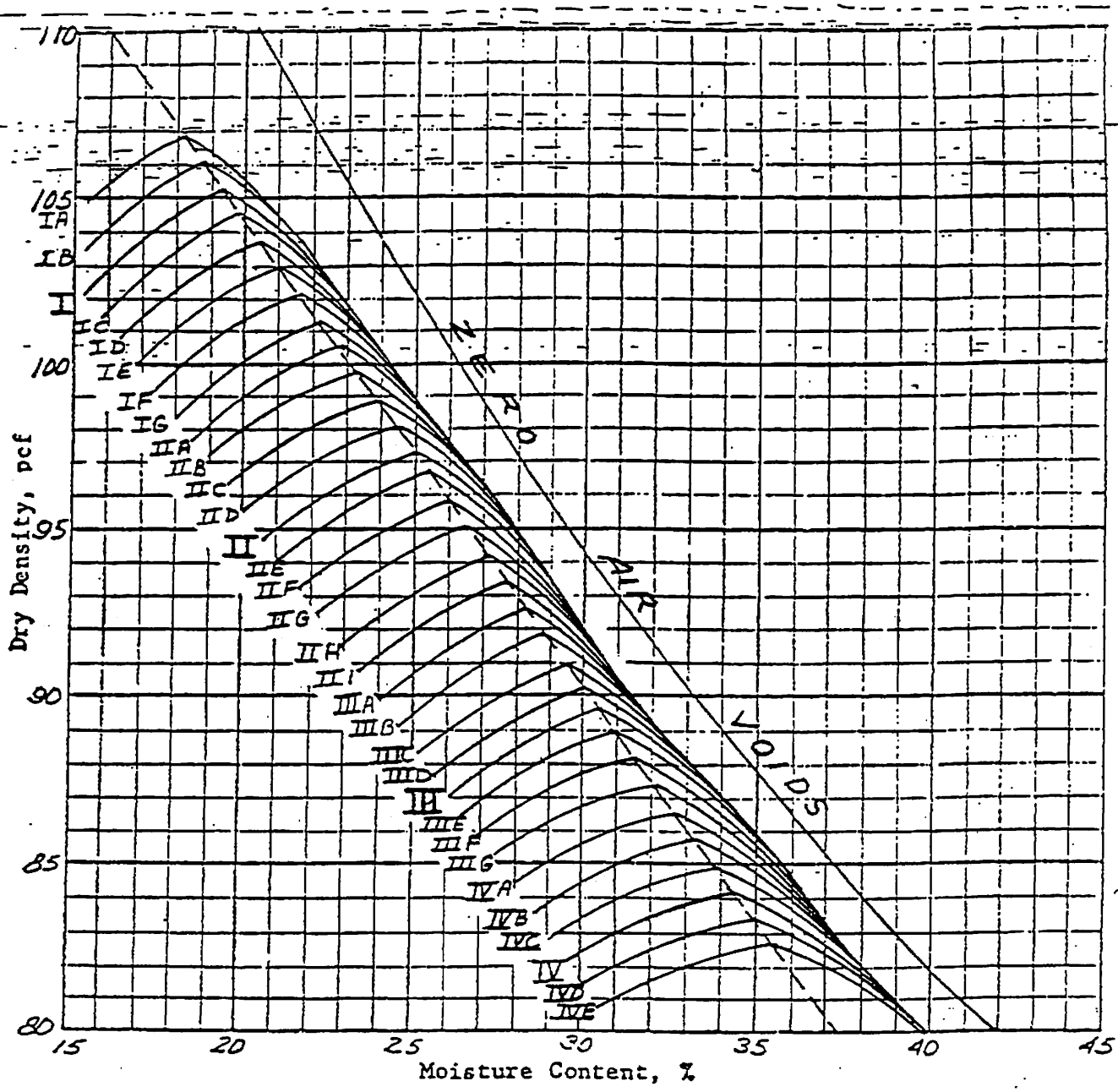

Soil Class	Gravel %	Sand %	Silt %	Clay %	Specific Gravity	LL %	PI %	Optimum Moisture, %	Maximum Density, pcf
I-ML	0	43	18	41	2.75	43.8	16.7	19.3	105.2
II-MH	0	18	31	51	2.74	52.7	22.8	25.0	97.2
III CH	0	8	31	61	2.78	69.6	37.1	30.4	89.5
IV-MH	0	14	17	69	2.77	60.5	22.8	34.3	84.1

Plus No. 4 Specific Gravity, SSD	
Plus No. 4 Absorption, %	

Remarks:

Figure 2.5.1-14

Standard Proctor Compaction
Borrow Area

Best Available Historical Image

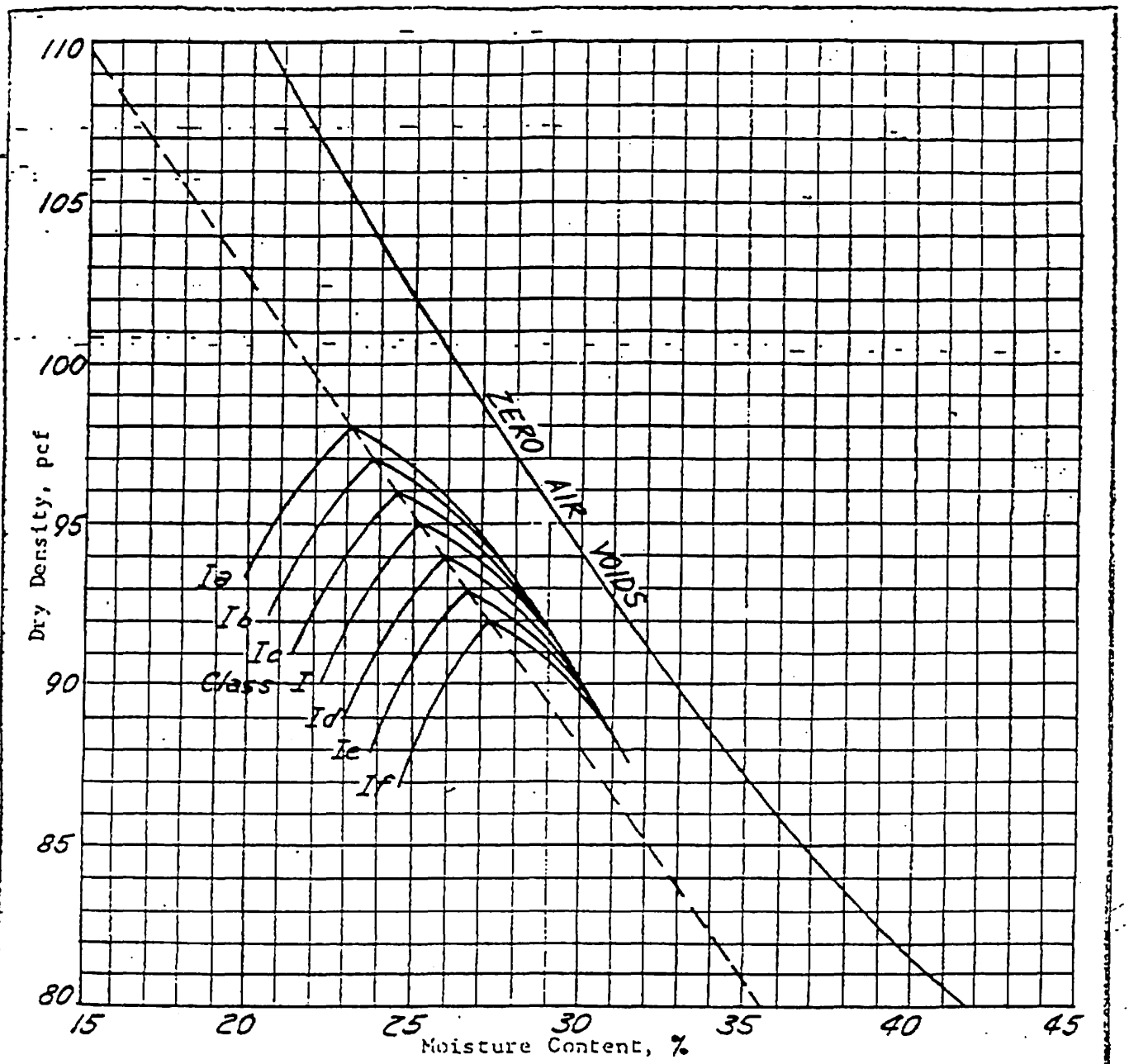

Soil Class	Gravel %	Sand %	Silt %	Clay %	Specific Gravity	LL %	PI %	Optimum Moisture, %	Maximum Density, pcf
I-ML	0	17	27	56	2.75	48.2	14.4	25.0	95.0

Plus No. 4 Specific Gravity, SSD	
Plus No. 4 Absorption, %	

Remarks: Sample from east of Igou Cemetery

Figure 2.5.1-15

Standard Proctor Compaction
Borrow Area

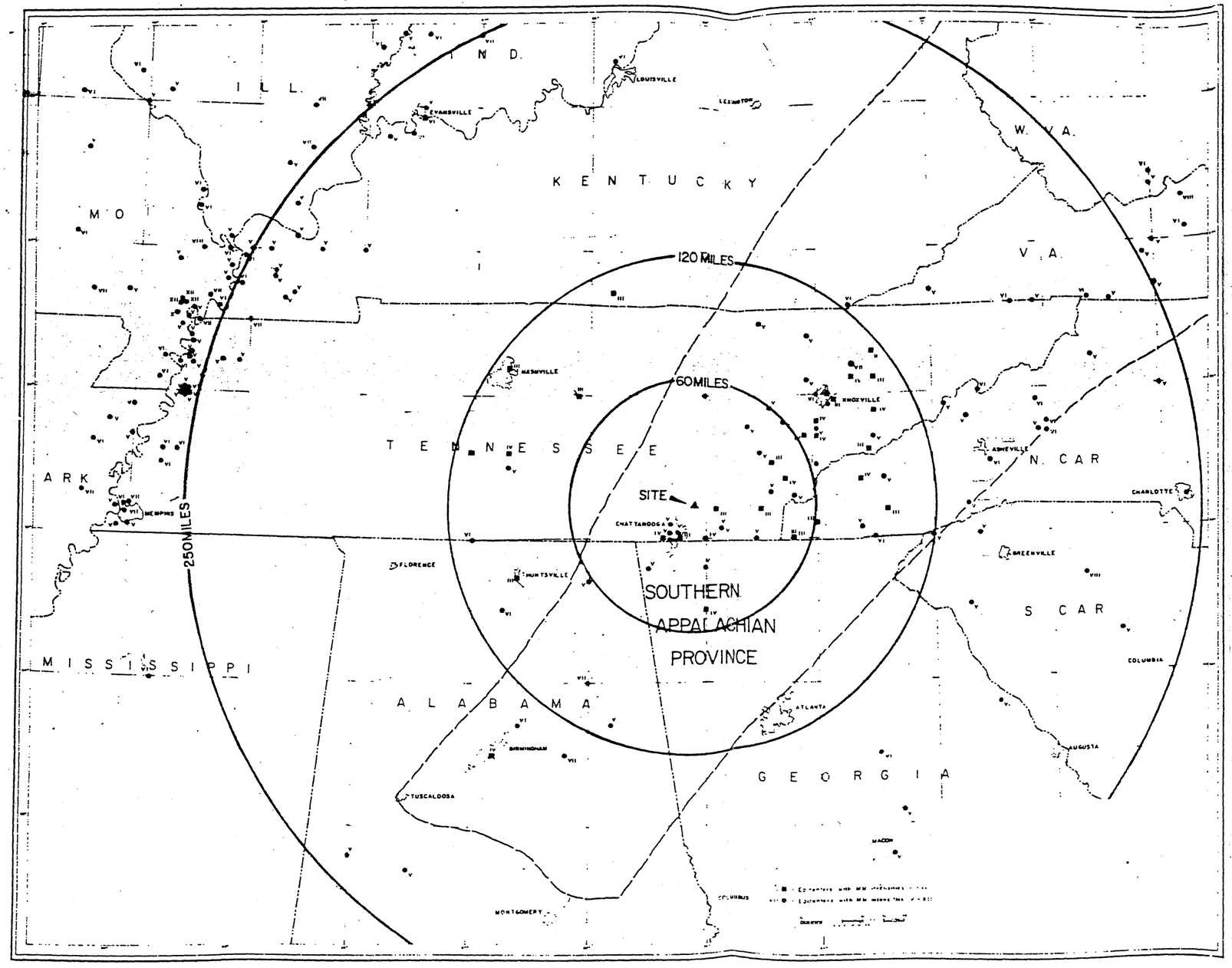

Figure 2.5.2-1 Location of Earthquake Epicenters

Figure 2.5.2-2 Map Showing the Extent of Earthquake Disturbances in the New Madrid Area in 1811-12

Figure 2.5.2-3 Isoseismals of the Charleston Earthquake

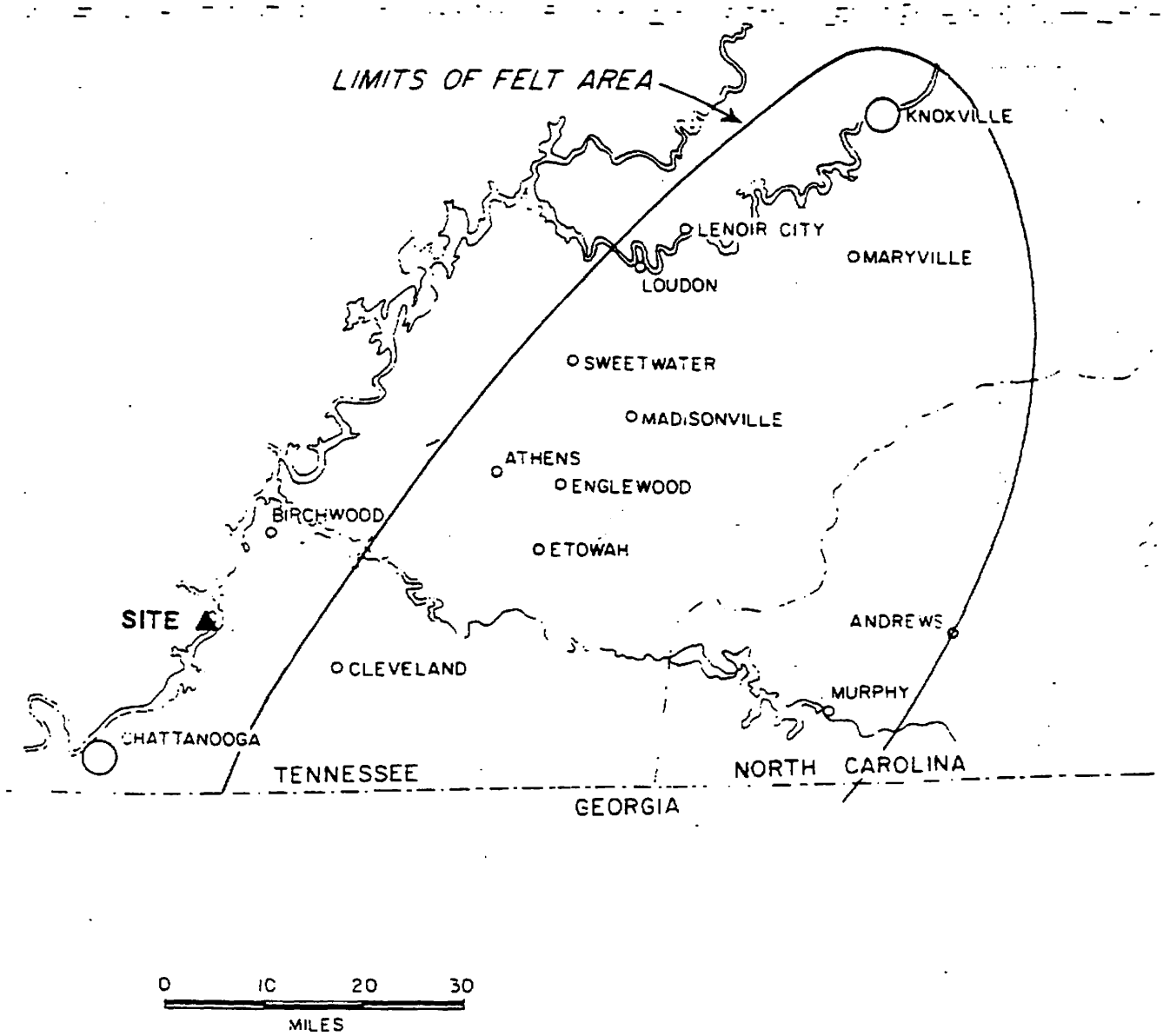

Figure 2.5.2-4 East Tennessee Earthquake of April 17, 1913

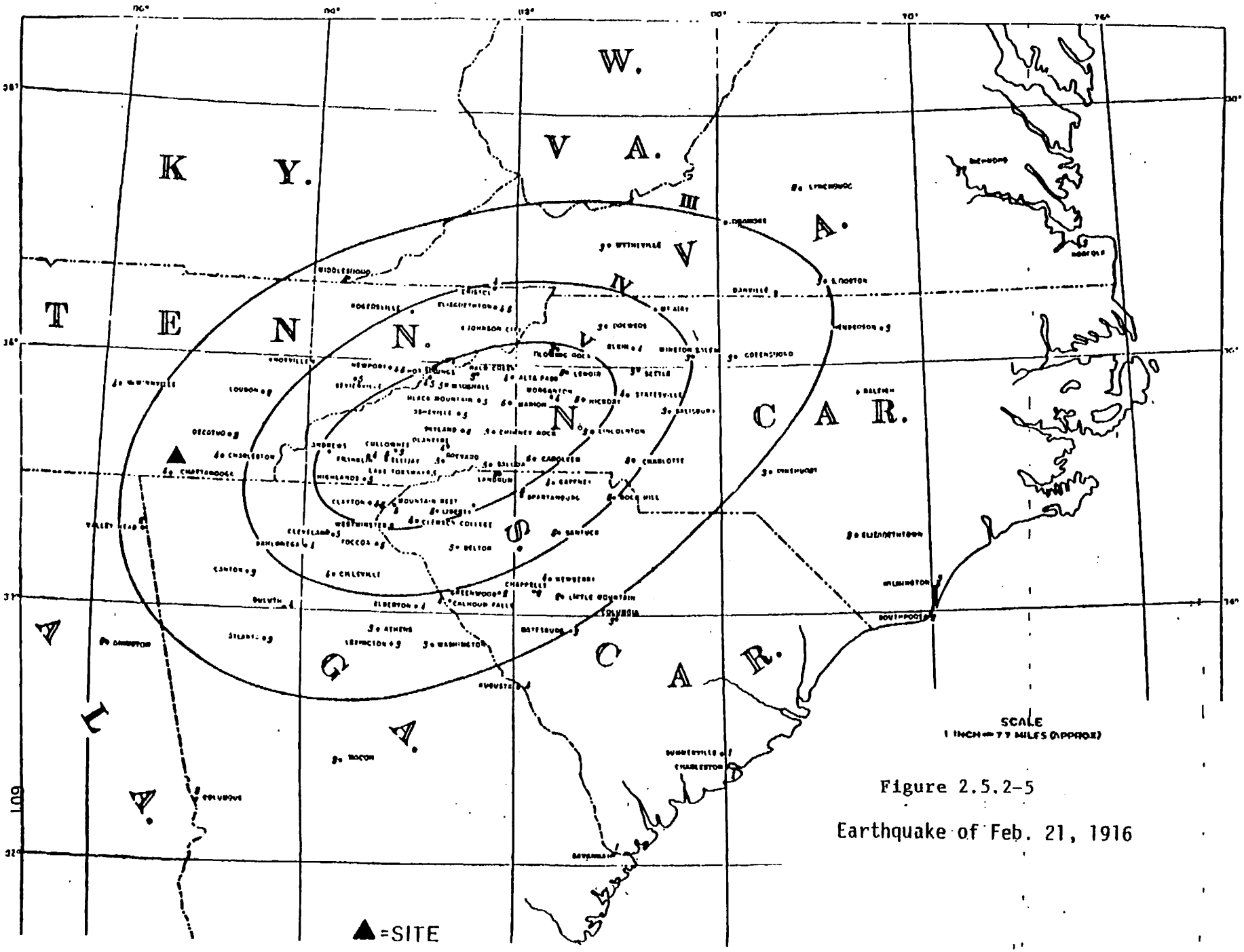

Figure 2.5.2-5

Earthquake of Feb. 21, 1916

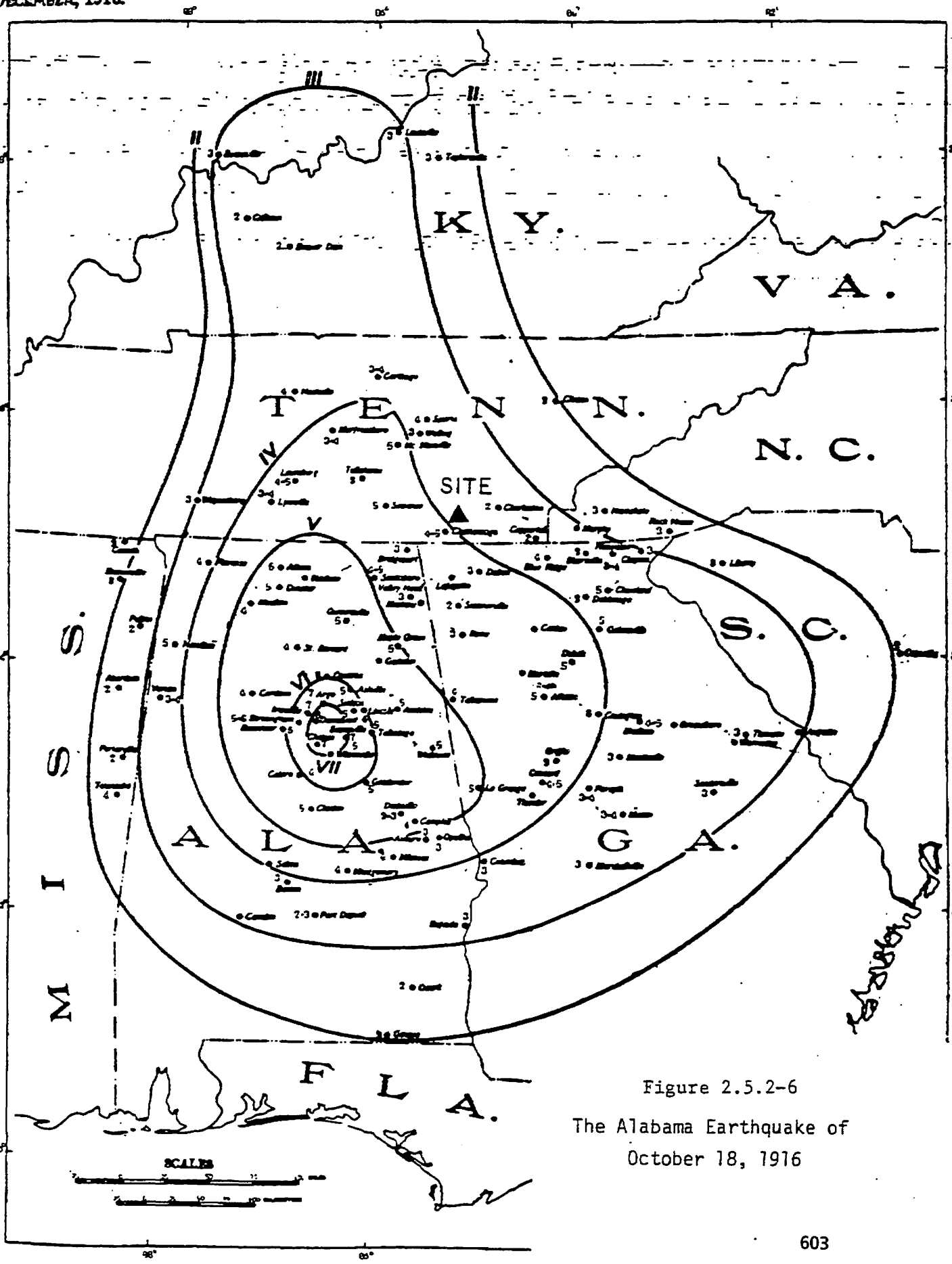

Figure 2.5.2-6

The Alabama Earthquake of October 18, 1916

Isoseismals of the Alabama earthquake of October 18, 1916.

Best Available Historical Image

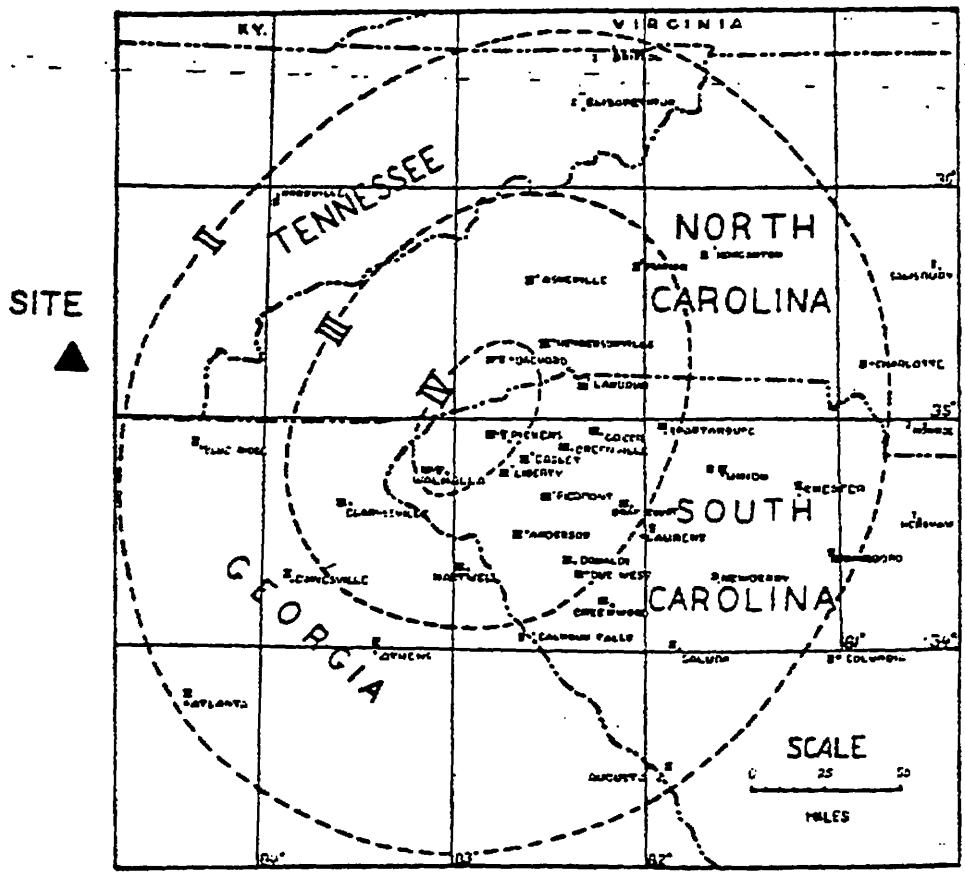

Isoseismals of the Southern Appalachian earthquake of October 20, 1924. Rossi-Forel scale

Figure 2.5.2-7 Southern Appalachian Earthquake of October 1924

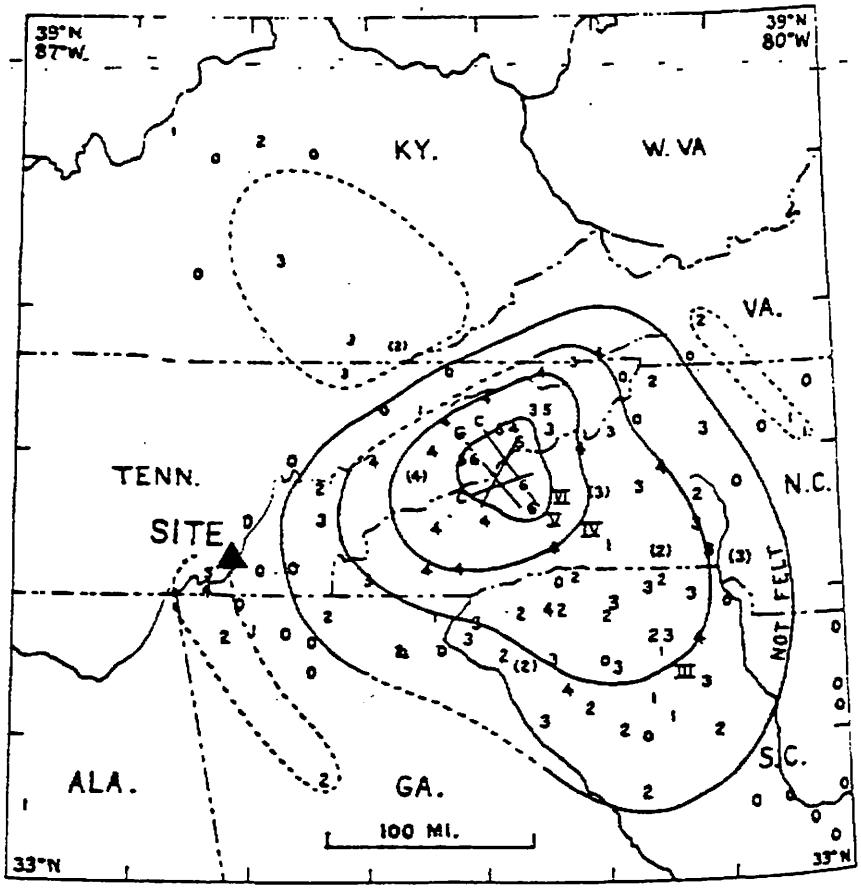

Isoseismal map for the southern Appalachian earthquake of November 2, 1928

Figure 2.5.2-8 Appalachian Earthquake of November 2, 1928

Best Available Historical Image

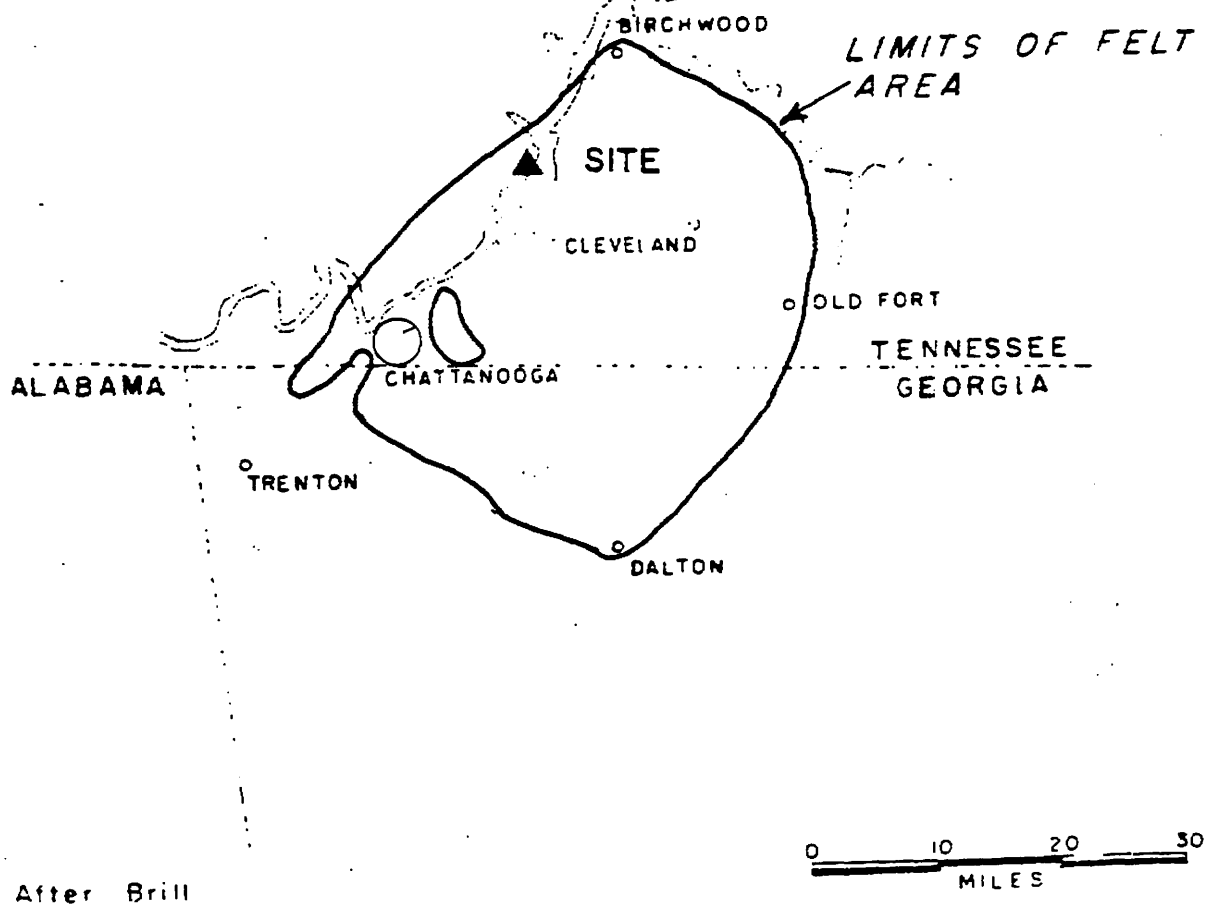

After Brill

Figure 2.5.2-9 Chattanooga Earthquake October 19, 1940

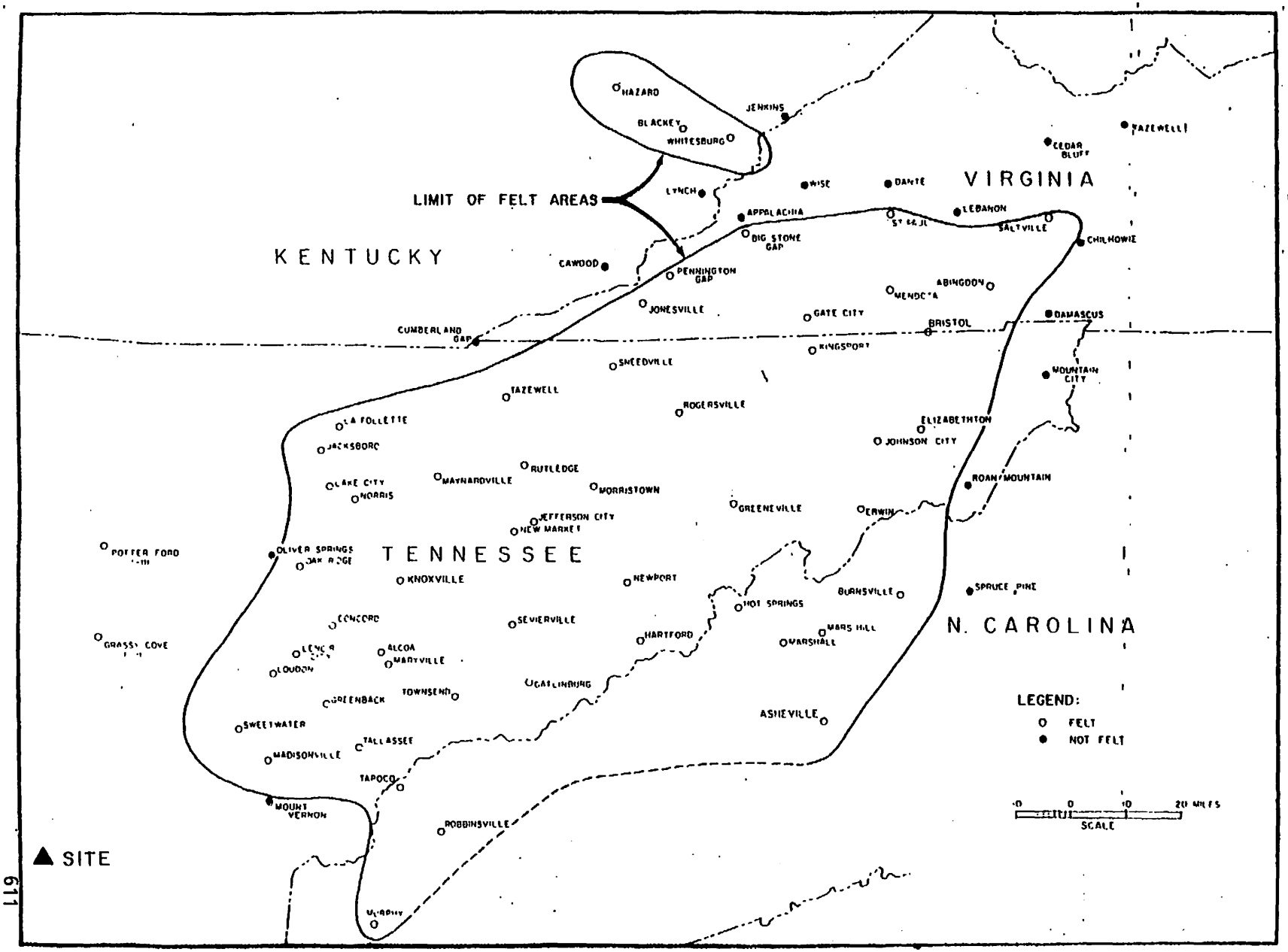

Figure 2.5.2-10 East Tennessee Earthquake of July 13, 1969

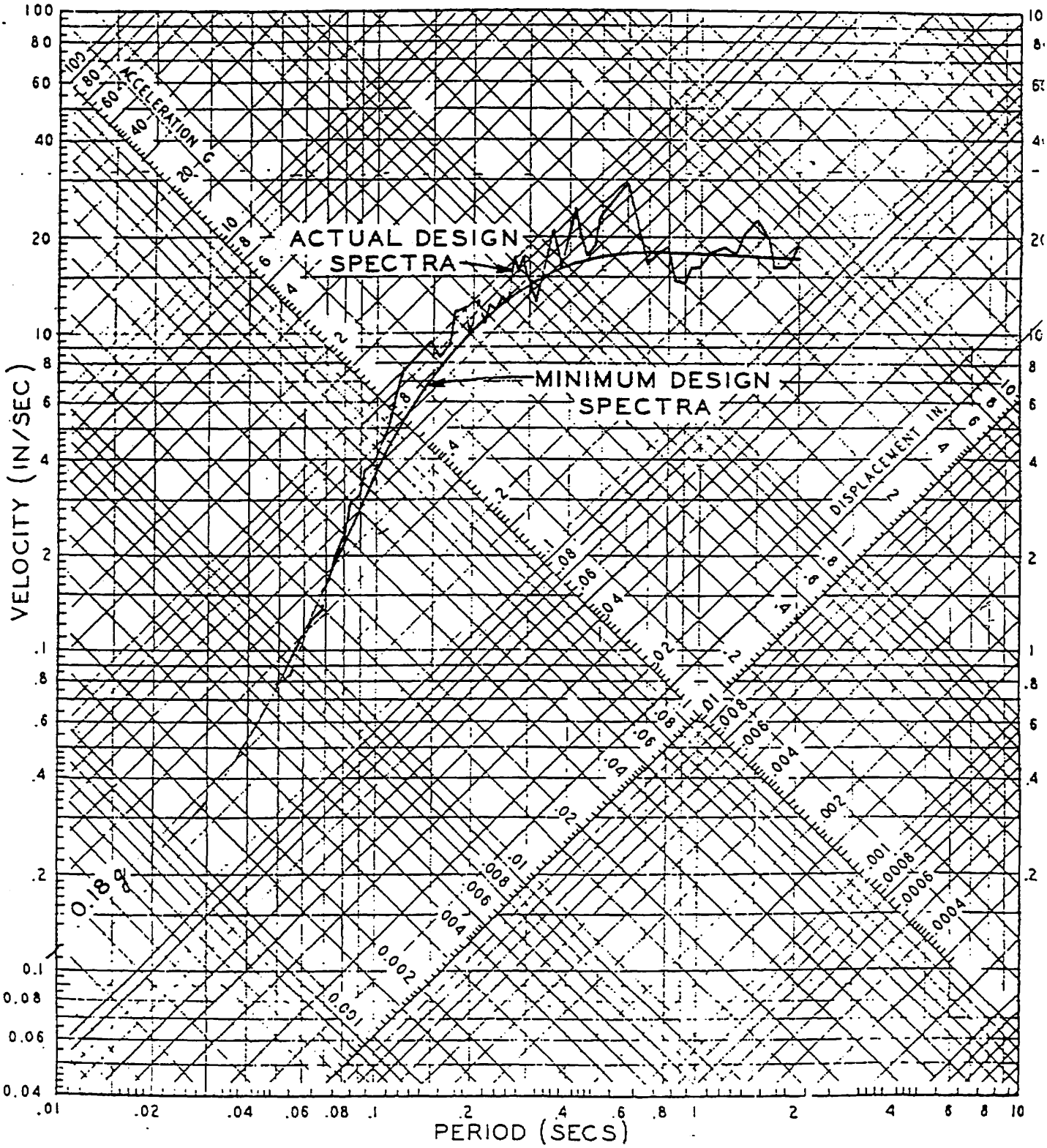

Figure 2.5.2-11 Comparison of Response Spectra for Safe Shutdown Earthquake, 1/2% Damping

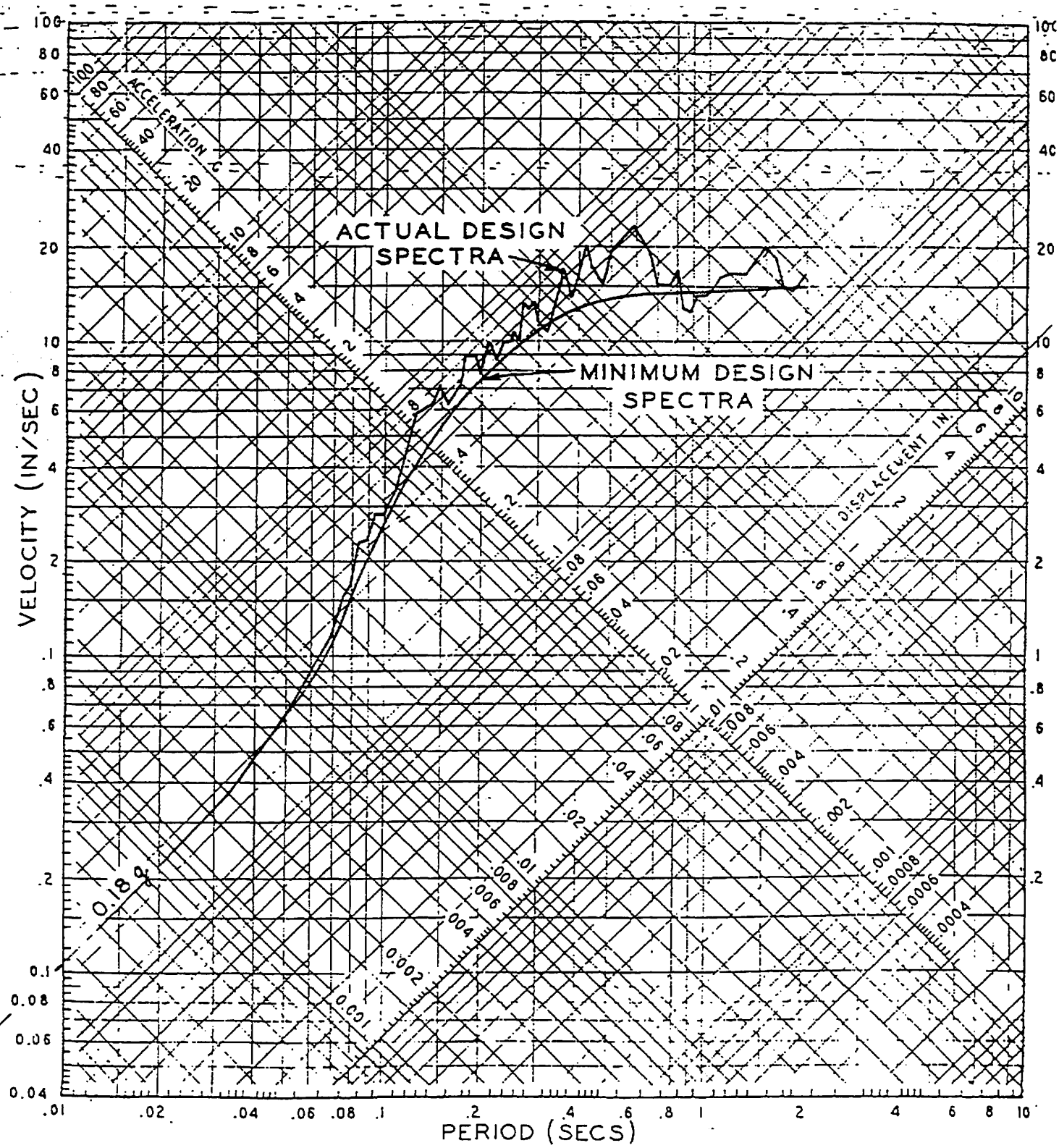

Figure 2.5.2-12 Comparison of Response Spectra for Safe Shutdown Earthquake, 1% Damping

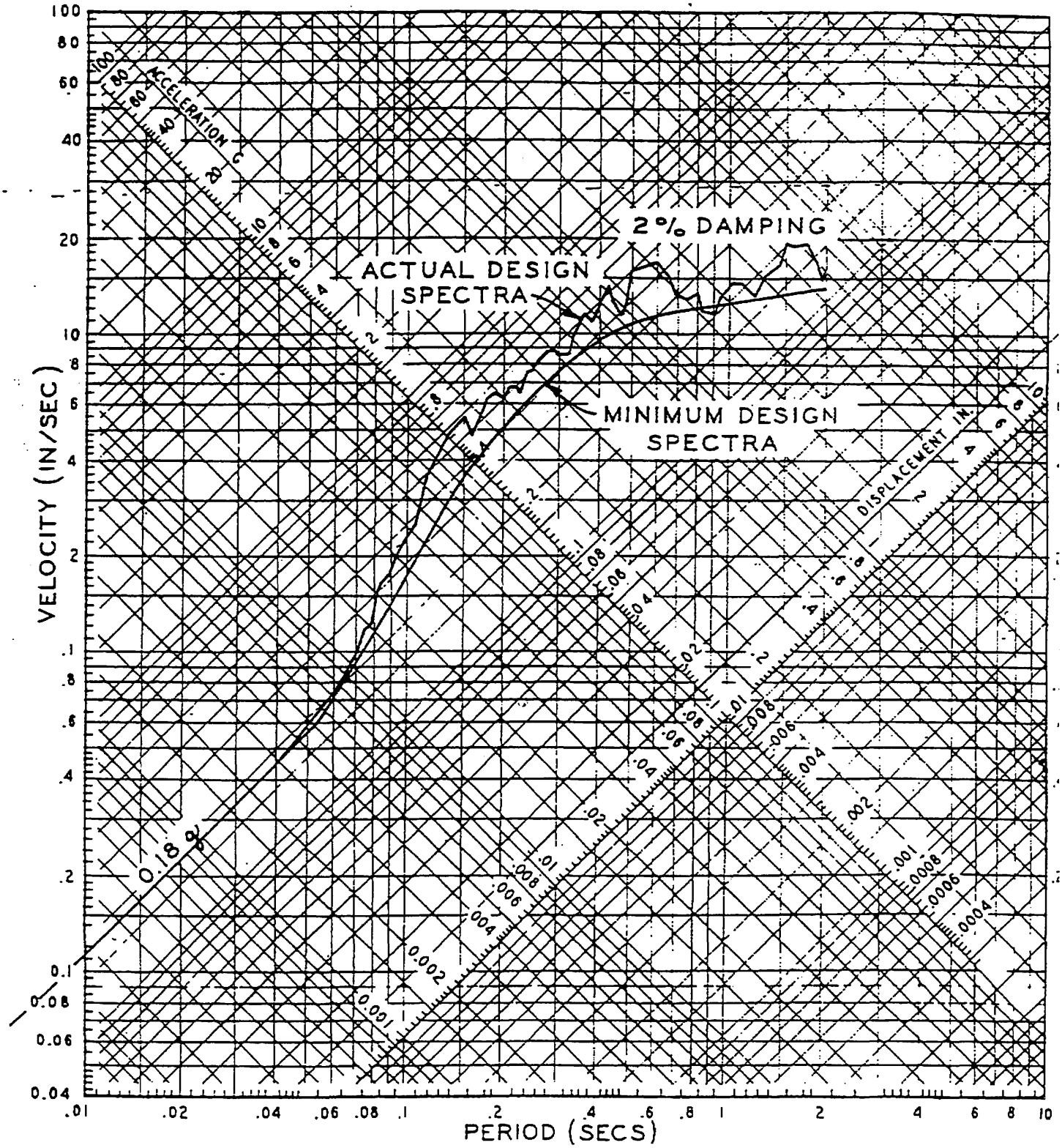

Figure 2.5.2-13 Comparison of Response Spectra for Safe Shutdown Earthquake, 2% Damping

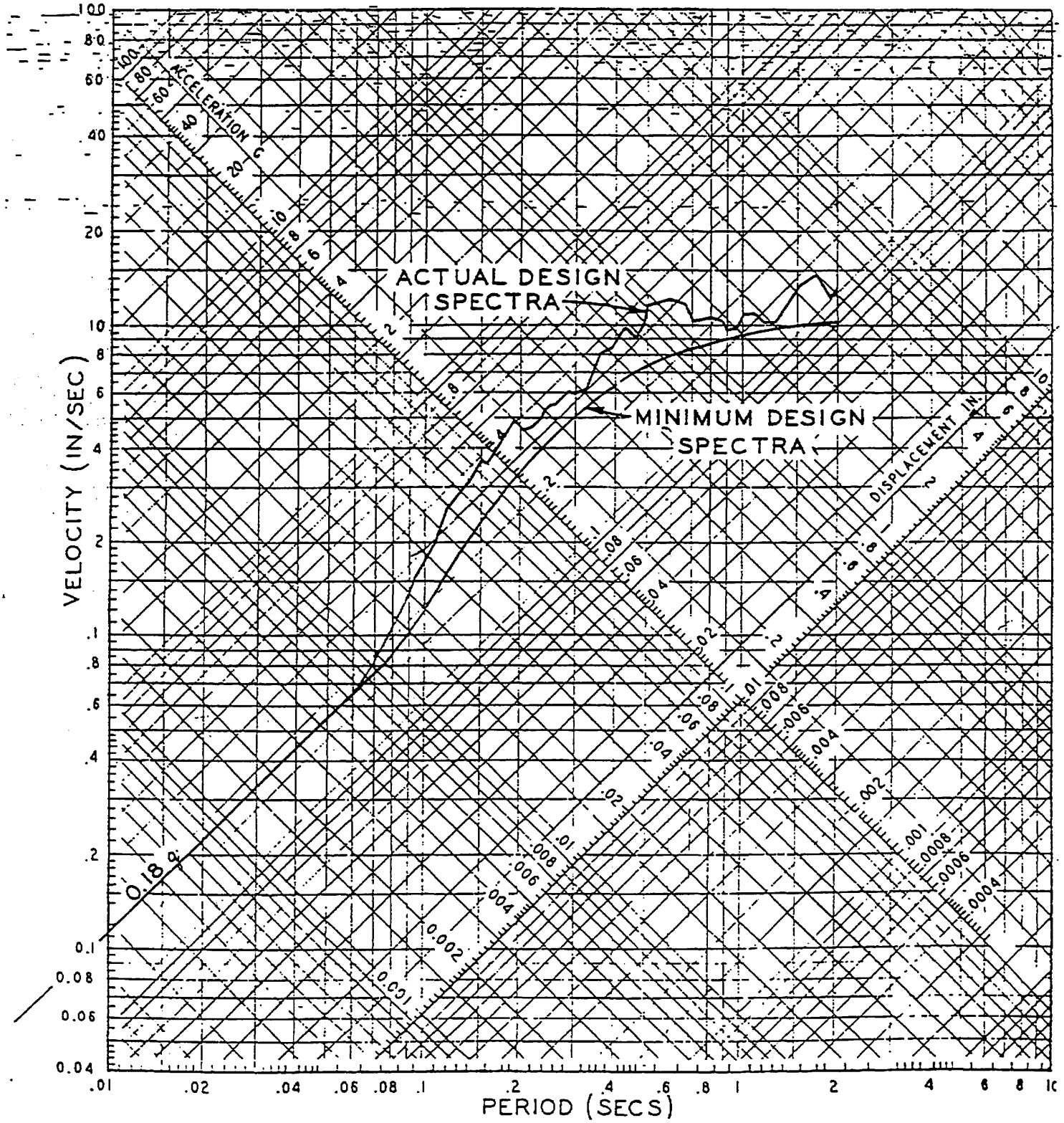

Figure 2.5.2-14 Comparison of Response Spectra for Safe Shutdown Earthquake, 5% Damping

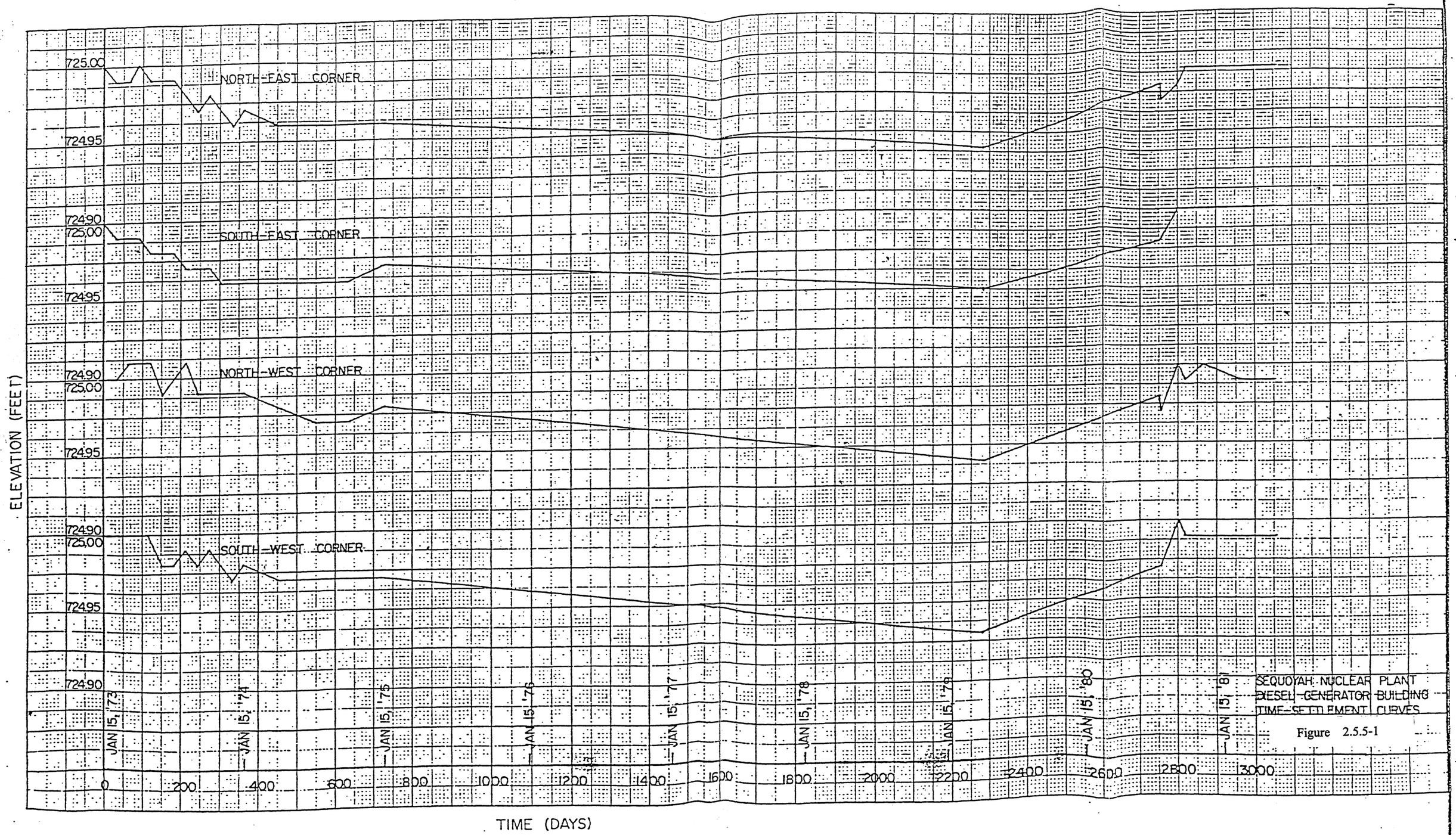

SEQUOYAH NUCLEAR PLANT
DIESEL GENERATOR BUILDING
TIME-SETTLEMENT CURVES

Figure 2.5.5-1

SOIL PROPERTIES (R-TEST)

Zone	ϕ	C (PSF)	γ (PCF)
1	15°	740	113
2	15°	740	114
3	15°	800	115

Critical Slip Circle
Design Case: DBE

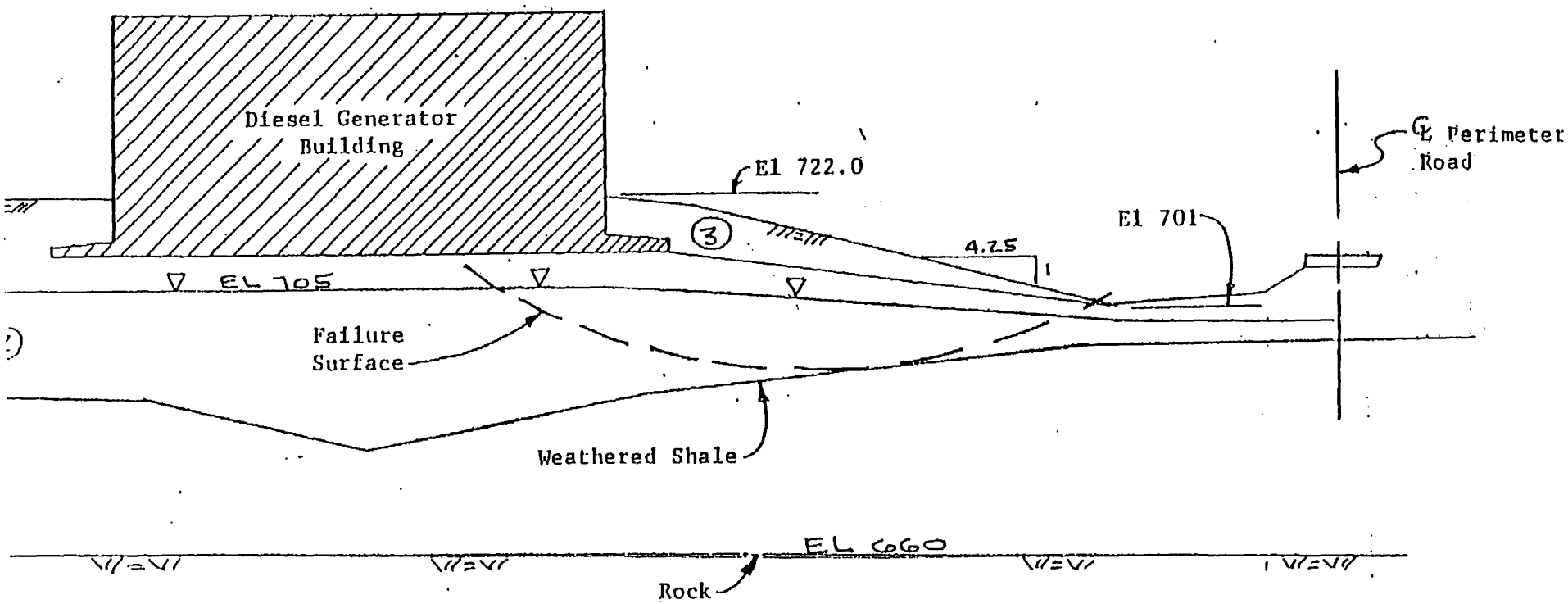

Figure 2.5.6-1

Diesel Generator Bldg.
Sequoyah Nuclear Plant
Scale; 1" -30'

Revised by Amendment 6

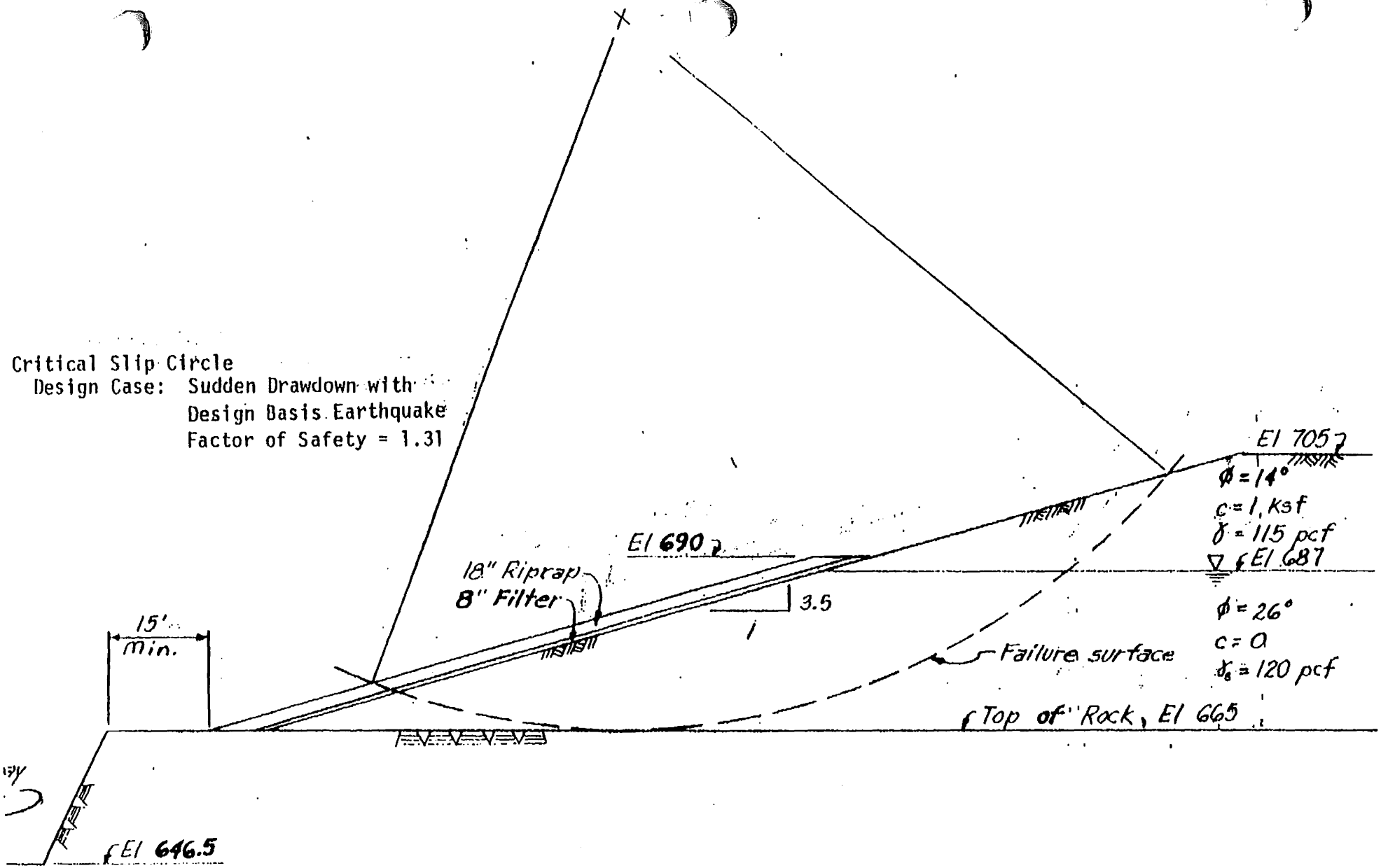

Figure 2.5.6-2 Section of Forebay and Intake Slope Sequoyah Nuclear Plant Pumping Station

2.6 CONCLUSIONS

The various significant characteristics of the Sequoyah Nuclear Plant site which have, to varying degrees, influenced plant design and operating plans, are shown in Table 2.6-1. The foregoing discussions have shown how these various site characteristics have influenced the plant design and how this design has taken into consideration the site related aspects of the NRC Regulatory Guides, based on the material in Sections 2.1 through 2.5 and the following considerations, it is concluded that the Sequoyah Nuclear Plant site meets the Reactor Siting Criteria of 10 CFR Part 100:

l. The site, consisting of approximately 525 acres, provides a minimum exclusion distance of approximately 1824 feet.

2. There are no residences on the site.

3. The population density and use characteristics of the environs are compatible with the location of a nuclear plant. The low population zone and population center distances are approximately 3 and 7.5 miles, respectively.

4. The geological, seismological, hydrological, and meteorological characteristics of the site and environs are considered suitable for its intended uses and have been considered in the plant design and operating plans.

5. As analyzed in Chapter 15, the radiation doses to the public at the exclusion distance and low population zone distance, under postulated hypothetical accident conditions, are well within the reference values of 10 CFR Part 100.

Table 2.6-1
SEQUOYAH NUCLEAR PLANT SITE CHARACTERISTICS

1.	Site location	Approximately 7.5 miles northeast of Chattanooga, TN at TN River Mile (TRM) 484.5
2.	Site area	525 acres
3.	Exclusion distance	1824 feet
4.	Low population zone distance	three miles
5.	Population center distance	7.5 miles
6.	Elevation of plant grade	705 feet MSL
7.	Tennessee River normal maximum pool elevation	682.5 feet MSL
8.	Design basis flood	726.8 feet MSL
9.	Population density, 0-10 mile, 1970 census	102.32 persons/sq. mile
10.	Distance from diffuser discharge to the nearest downstream drinking water intake	10.7 miles
11.	Tectonic province of site	Southern Appalachian
12.	Maximum historical earthquake	MM VIII
13.	Safe Shutdown Earthquake (SSE) peak accelerations	0.18 g horizontal 0.12 g vertical
14.	Depth of soil overburden	Ranges from 3.2 to 45 feet
15.	Bedrock at site	Interbedded limestone and shale
16.	Tornado probability	4.4×10^{-5}
17.	Average annual air temperature	59.7°F
18.	Average annual precipitation	58 inches
19.	Chickamauga Reservoir surface temperature	Maximum 30°C Minimum 2°C
20.	Intake location	TRM 484.8
21.	Diffuser location	TRM 483.7

TABLE OF CONTENTS

Section	Title	Page
3.0	DESIGN CRITERIA - STRUCTURES, COMPONENTS EQUIPMENT AND SYSTEMS	
3.1	CONFORMANCE WITH NRC GENERAL DESIGN CRITERIA	3.1-1
3.1.1	SINGLE FAILURE CRITERIA	3.1-1
3.1.2	OVERALL REQUIREMENTS	3.1-2
3.2	CLASSIFICATION OF STRUCTURES, SYSTEMS, AND COMPONENTS	3.2-1
3.2.1	SEISMIC QUALIFICATIONS	3.2-1
3.2.2	SYSTEM QUALITY GROUP CLASSIFICATION (FLUID COMPONENTS)	3.2-1
3.2.2.1	Class A	3.2-1
3.2.2.2	Class B	3.2-2
3.2.2.3	Class C	3.2-3
3.2.2.4	Class D	3.2-3
3.2.2.5	Relationship of Applicable Codes to Safety Classification for Mechanical Components	3.2-4
3.2.2.6	Nonnuclear Safety Class (NNS)	3.2-4
3.2.3	REFERENCES	3.2-5
3.3	WIND AND TORNADO LOADINGS	3.3-1
3.3.1	WIND LOADINGS	3.3-1
3.3.1.1	Design Wind Velocity	3.3-1
3.3.1.2	Basis for Wind Velocity Selection	3.3-1
3.3.1.3	Vertical Velocity Distribution and Gust Factor	3.3-1
3.3.1.4	Determination of Applied Force	3.3-1
3.3.2	TORNADO LOADINGS	3.3-1
3.3.2.1	Applicable Design Parameters	3.3-1
3.3.2.2	Determination of Forces on Structures	3.3-2
3.3.2.3	Ability of Category I Structures to Perform Despite Failure of Structures Not Designed for Tornado Loads	3.3-3
3.3.3	REFERENCES	3.3-4
3.4	WATER LEVEL (FLOOD) DESIGN	3.4-1
3.4.1	FLOOD ELEVATIONS	3.4-1

TABLE OF CONTENTS

Section	Title	Page
3.4.2	FLOOD FORCE APPLICATION	3.4-1
3.4.3	FLOOD PROTECTION	3.4-1
3.5	MISSILE PROTECTION	3.5-1
3.5.1	MISSILE BARRIER AND LOADINGS	3.5-4
3.5.2	MISSILE SELECTION	3.5-4
3.5.2.1	Control Rod Drive Mechanism	3.5-4
3.5.2.2	Valves	3.5-4
3.5.2.3	Temperature and Pressure Sensing Assemblies	3.5-4
3.5.2.4	Pressurizer Heaters	3.5-5
3.5.2.5	Electrical Cables	3.5-5
3.5.2.6	Steel Containment Structure	3.5-5
3.5.2.7	Shield Building	3.5-6
3.5.2.8	Ice Condenser Containment System	3.5-6
3.5.2.9	Emergency Core Cooling System	3.5-6
3.5.2.10	Containment Spray System	3.5-7
3.5.2.11	Containment Isolation System	3.5-7
3.5.2.12	Diesel Generator Building	3.5-8
3.5.2.13	Control Bay	3.5-8
3.5.2.14	Spent Fuel Pool	3.5-8
3.5.2.15	The Auxiliary Building	3.5-9
3.5.2.16	The Control Building	3.5-9
3.5.2.17	Intake Structure	3.5-9
3.5.2.18	Components Not Credible Sources of Missiles Inside Containment	3.5-9
3.5.2.19	Missiles From Main Turbine	3.5-10
3.5.2.20	Nearby Site Activity Generated Missiles	3.5-10
3.5.2.21	Tornado-Generated Missiles	3.5-11
3.5.2.22	Condensate Storage Tanks	3.5.11
3.5.3	SELECTED MISSILES	3.5-11
3.5.4	BARRIER DESIGN PROCEDURES	3.5-13
3.5.5	MISSILE BARRIER FEATURES	3.5-17
3.5.6	REFERENCES	3.5-24
3.6	PROTECTION AGAINST EFFECTS ASSOCIATED WITH THE POSTULATED RUPTURE OF PIPING	3.6-1
3.6.1	SYSTEMS IN WHICH DESIGN BASIS PIPING BREAKS OCCUR	3.6-1
3.6.1.1	Main Reactor Coolant Piping System	3.6-1
3.6.1.2	Other Piping Systems	3.6-1

TABLE OF CONTENTS

Section	Title	Page
3.6.2	DESIGN BASIS PIPING BREAK CRITERIA	3.6-6
3.6.2.1	Main Reactor Coolant Piping System	3.6-6
3.6.2.2	Other Pipe Systems (Inside Containment)	3.6-6
3.6.3	DESIGN LOADING COMBINATIONS	3.6-11
3.6.3.1	Main Reactor Coolant Piping System	3.6-11
3.6.3.2	Other Piping Systems (Inside Containment)	3.6-11
3.6.4	DYNAMIC ANALYSES	3.6-13
3.6.4.1	Main Reactor Coolant System	3.6-13
3.6.4.2	Other Piping Systems (Inside Containment)	3.6-14
3.6.5	PROTECTIVE MEASURES	3.6-18
3.6.5.1	Main Reactor Coolant Piping System	3.6-18
3.6.5.2	Other Piping Systems	3.6-20
3.6.6	ASSUMPTIONS	3.6-20
3.6.6.1	Plant Operating Mode	3.6-20
3.6.6.2	Offsite Power	3.6-20
3.6.6.3	Unintended Operation of Equipment	3.6-20
3.6.6.4	Operator Response	3.6-20
3.6.7	SYSTEM EVALUATION	3.6-20
3.6.7.1	General	3.6-21
3.6.7.2	Objective	3.6-21
3.6.7.3	Guiding Philosophy	3.6-21
3.6.7.4	Exclusions	3.6-21
3.6.7.5	Evaluation Procedure	3.6-22
3.6.7.6	Main Steam	3.6-22
3.6.7.7	Main Feedwater	3.6-23
3.6.8	WELDS	3.6-24
3.6.9	REFERENCE	3.6-24
3.7	SEISMIC DESIGN	3.7-1
3.7.1	SEISMIC DESIGN FOR STRUCTURES	3.7-1
3.7.1.1	Design Response Spectra	3.7-1
3.7.1.2	Design Response Spectra Derivation	3.7-1
3.7.1.3	Critical Damping Values	3.7-1
3.7.1.4	Bases for Site Dependent Analysis	3.7-1
3.7.1.5	Soil-Supported Category I Structures	3.7-1
3.7.1.6	Soil-Structure Interaction	3.7-1
3.7.2	SEISMIC SYSTEM ANALYSIS	3.7-2
3.7.2.1	Category I Systems and Components Supplied by Westinghouse	3.7-2
3.7.2.2	Category I Structures Listed	3.7-10

TABLE OF CONTENTS

Section	Title	Page
3.7.2.3	Seismic Analysis Methods for Category I Structures	3.7-23
3.7.3	SEISMIC SUBSYSTEM ANALYSIS	3.7-27
3.7.3.1	Determination of Number of Earthquake Cycles	3.7-27
3.7.3.2	Basis for Frequency Selection	3.7-28
3.7.3.3	Modal Response Combinations (TVA Analysis)	3.7-28
3.7.3.4	Modal Response of Closely Spaced Frequencies (NSSS Analysis)	3.7-29
3.7.3.5	Equivalent Static Loads	3.7-29
3.7.3.6	Seismic Analysis of System Piping	3.7-29
3.7.3.7	Basis for Computing Combined Response	3.7-33
3.7.3.8	Amplified Seismic Response	3.7-33
3.7.3.9	Use of Alternate Dynamic Analysis	3.7-33
3.7.3.10	Modal Period Variation	3.7-33
3.7.3.11	Torsional Effects of Eccentric Masses	3.7-33
3.7.3.12	Buried Seismic Category I Piping Systems	3.7-34
3.7.3.13	Interaction of Other Piping with Category I Piping	3.7-34
3.7.3.14	Field Location of Supports and Restrains	3.7-35
3.7.3.15	Seismic Analysis for Fuel Elements, Control Rod Assemblies, and Control Rod Drives	3.7-35
3.7.4	SEISMIC INSTRUMENTATION PROGRAM	3.7-35
3.7.4.1	Comparison with NRC Regulatory Guide 1.12	3.7-36
3.7.4.2	Location and Description of Instrumentation	3.7-36
3.7.4.3	Control Room Operator Notification	3.7-37
3.7.4.4	Controlled Shutdown Logic	3.7-38
3.7.4.5	References	3.7-39
3.7.5	SEISMIC DESIGN CONTROL MEASURES	3.7-39
3.7.5.1	Westinghouse Control Measures	3.7-39
3.7.5.2	TVA Control Measures	3.7-40
3.7.6	REFERENCES	3.7-41
3.8	DESIGN OF CATEGORY I STRUCTURES	3.8-1
3.8.1	CONCRETE CONTAINMENT	3.8-1
3.8.1.1	Shield Building	3.8-1
3.8.1.2	Applicable Codes, Standards and Specifications	3.8-2
3.8.1.3	Loads and Loading Combinations	3.8-4
3.8.1.4	Design and Analysis Procedures	3.8-7

TABLE OF CONTENTS

Section	Title	Page
3.8.1.5	Structural Acceptance Criteria	3.8-10
3.8.1.6	Materials, Quality Control and Special Construction Techniques	3.8-12
3.8.1.7	Testing and Inservice Surveillance Requirements	3.8-15
3.8.2	STEEL CONTAINMENT SYSTEM	3.8-15
3.8.2.1	Description of the Containment	3.8-15
3.8.2.2	Applicable Codes, Standards, and Specifications	3.8-15
3.8.2.3	Loads and Loading Combinations	3.8-24
3.8.2.4	Design and Analysis Procedure	3.8-30
3.8.2.5	Structural Acceptance Criteria	3.8-37
3.8.2.6	Design Loading Combinations and Stress Limits	3.8-40
3.8.2.7	References	3.8-41
3.8.3	CONCRETE INTERIOR STRUCTURES	3.8-41
3.8.3.1	Description of the Interior Structures	3.8-41
3.8.3.2	Applicable Codes, Standards and Specifications	3.8-47
3.8.3.3	Loads and Loading Combinations	3.8-47
3.8.3.4	Design and Analysis Procedures	3.8-50
3.8.3.5	Structural Acceptance Criteria	3.8-63
3.8.3.6	Materials, Quality Control, and Special Construction Techniques	3.8-67
3.8.3.7	Testing and Inservice Surveillance Requirements	3.8-71
3.8.3.8	Environmental Effects	3.8-72
3.8.4	OTHER CATEGORY I STRUCTURES	3.8-73
3.8.4.1	Description of the Structures	3.8-73
3.8.4.2	Applicable Codes, Standards, and Specifications	3.8-82
3.8.4.3	Loads and Loading Combinations	3.8-83
3.8.4.4	Design and Analysis Procedures	3.8-85
3.8.4.5	Structural Acceptance Criteria	3.8-95
3.8.4.6	Materials, Quality Control, and Special Construction Techniques	3.8-98
3.8.4.7	Testing and Inservice Surveillance Requirements	3.8-100
3.8.5	FOUNDATIONS AND CONCRETE SUPPORTS	3.8-101
3.8.5.1	Description of Foundation and Supports	3.8-101
3.8.5.2	Applicable Codes, Standards, and Specifications	3.8-103
3.8.5.3	Loads and Loading Combinations	3.8-104
3.8.5.4	Design and Analysis Procedure	3.8-104
3.8.5.5	Structural Acceptance Criteria	3.8-105
3.8.5.6	Materials, Quality Control, and Special Construction Techniques	3.8-107

TABLE OF CONTENTS

Section	Title	Page
3.8.6	CATEGORY 1(L) CRANES	3.8-107
3.8.6.1	Polar Cranes	3.8-107
3.8.6.2	Auxiliary Building Crane	3.8-111
APPENDIX 3.8A	SHELL TEMPERATURE TRANSIENTS	3.8A-1
APPENDIX 3.8B	CONTAINMENT VESSEL PENETRATIONS	3.8B-1
APPENDIX 3.8C	CONTAINMENT ANCHORAGE	3.8C-1
APPENDIX 3.8D	COMPUTER PROGRAMS USED IN STRUCTURAL ANALYSIS	3.8D-1
APPENDIX 3.8E	DESIGN PROCEDURE FOR REINFORCED CONCRETE BLOCK WALLS	3.8E-1
3.9	MECHANICAL SYSTEMS AND COMPONENTS	3.9-1
3.9.1	DYNAMIC SYSTEM ANALYSIS AND TESTING	3.9-1
3.9.1.1	Vibration Operational Test Program	3.9-1
3.9.1.2	Dynamic Testing Procedures	3.9-3
3.9.1.3	Dynamic System Analysis Methods for Reactor Internals	3.9-5
3.9.1.4	Correlation of Tests and Analytical Results for Reactor Internals	3.9-14
3.9.1.5	Analysis Methods Under LOCA Loadings	3.9-15
3.9.1.6	Analytical Methods for ASME Code Class 1 NSSS Components	3.9-16
3.9.2	SAFETY CLASS B, C, AND D FLUID COMPONENTS	3.9-17
3.9.2.1	Plant Conditions and Design Loading Combinations	3.9-17
3.9.2.2	Design Loading Combinations	3.9-17
3.9.2.3	Inelastic Deformation	3.9-18
3.9.2.4	Design and Installation Criteria, Pressure Relieving Devices	3.9-18
3.9.2.5	Stress Levels for Category I Components	3.9-19
3.9.2.6	Field Run Piping	3.9-29
3.9.2.7	Interim Acceptance Criteria	3.9-30
3.9.3	NSSS COMPONENTS NOT COVERED BY ASME CODE	3.9-31
3.9.3.1	Core and Internals Integrity Analysis (Mechanical Analysis)	3.9-31
3.9.3.2	Reactor Internals Response Under Blowdown and Seismic Excitation	3.9-32
3.9.3.3	Acceptance Criteria	3.9-33
3.9.3.4	Methods of Analysis	3.9-35
3.9.3.5	Blowdown Forces Due to Cold and Hot Leg Break	3.9-35

TABLE OF CONTENTS

Section	Title	Page
3.9.3.6	Methods and Results of Blowdown Analysis (Mechanical)	3.9-38
3.9.3.7	Control Rod Drive Mechanisms	3.9-39
3.9.3.8	Evaluation of Reactor Internals for Limited Displacement RPV Inlet and Outlet Nozzle Breaks	3.9-39
3.9.4	ADDITIONAL SUPPORT REQUIREMENTS	3.9-41
3.9.4.1	Support Welds	3.9-41
3.9.4.2	Allowable Loads for U-Bolts and Unistruct Type Clamps	3.9-41
3.9.5	REFERENCES	3.9-41
3.10	SEISMIC DESIGN OF CATEGORY I INSTRUMENTATION AND ELECTRICAL EQUIPMENT	3.10-1
3.10.1	SEISMIC DESIGN CRITERIA	3.10-1
3.10.1.1	Instrumentation	3.10-1
3.10.1.2	Electrical Equipment	3.10-3
3.10.2	SEISMIC ANALYSES, TESTING PROCEDURES, AND RESTRAINT MEASURES	3.10-4
3.10.2.1	Instrumentation	3.10-4
3.10.2.2	Support Structures	3.10-4
3.10.3	REFERENCES	3.10-8
3.11	ENVIRONMENTAL DESIGN OF MECHANICAL AND ELECTRICAL EQUIPMENT	3.11-1
3.11.1	EQUIPMENT IDENTIFICATION	3.11-1
3.11.2	ENVIRONMENTAL DESIGN AND ANALYSES	3.11-1
3.11.2.1	Environmental Design Criteria	3.11-1
3.11.2.2	Environmental Design Criteria for ESF Equipment	3.11-2
3.11.2.3	Environmental Design of ESF Components	3.11-2
3.11.2.4	Environmental Design of 10 CFR 50.49 Scope Equipment	3.11-2
3.11.3	LOSS OF VENTILATION	3.11-2
3.12	CONTROL OF HEAVY LOADS	3.12-1
3.12.1	INTRODUCTION/LICENSING BACKGROUND	3.12.1
3.12.2	SAFETY BASIS	3.12-1
3.12.3	SCOPE OF HEAVY LOAD HANDLING SYSTEMS	3.12-2

TABLE OF CONTENTS

Section	Title	Page
3.12.4	CONTROL OF HEAVY LOADS PROGRAM	3.12-2
3.12.4.1	SQN Commitments in Response to NUREG-0612, Section 5.1.1	3.12-2
3.12.4.2	Reactor Pressure Vessel Head (RPVH) Lifting Procedures	3.12-5
3.12.5	SAFETY EVALUATION	3.12-7
3.13	FLEX RESPONSE SYSTEM	3.13-1
3.13.1	FLEX RESPONSE SYSTEM MITIGATION OF BEYOND DESIGN BASIS EXTERNAL EVENTS	3.13-1
3.13.2	REFERENCE	3.13-1

LIST OF TABLES

Number	Title
3.2.1-1	Category I Structures
3.2.1-2	Summary of Criteria - Mechanical System Components (Excluding Piping)
3.2.1-3	Electrical Power System Equipment Designed to Operate During and After a "Safe Shutdown Earthquake"
3.2.2-1	Summary of Codes and Standards for Requirements for Sequoyah Mechanical System Components Excluding Piping
3.2.2-2	Summary of Codes and Standards for Requirements for Sequoyah Piping
3.2.2-3	Non-Nuclear Safety Classifications
3.5.1-1	Missiles
3.5.2-1	Missile Characteristics
3.5.5-1	Tornado Missile Spectrum for Category I Structures - Original Design
3.5.5-2	Sequoyah Nuclear Plant - Tornado Missile Spectrum A for Category I Structures
3.5.5-3	Tabulation of Walls and Roofs of Category I Structures Which are Less Than 2 Feet Thick
3.5.5-4	Sequoyah Nuclear Plant - Tornado Missile Spectrum B for ERCW Pumping Station
3.5.5-5	Sequoyah Nuclear Plant - Tornado Missile Spectrum D for Diesel Generator Equipment Doors
3.6.1-1	Piping Systems Inside Containment Where Energy Classifications Differ from Regulatory Guide 1.46 Definition
3.6.2-1	Postulated Design Basis Break Location for LOCA Analysis
3.6.7-1	Summary of Combined Stresses at Break Locations for Main Steam Lines
3.6.7-2	Checklist of Protection Provided Against Unacceptable Consequences of Main Steam and Feedwater Line Ruptures
3.6.7-3	Summary of Combined Stresses at Break Locations for Main Feedwater Lines

LIST OF TABLES

Number	Title
3.7.1-1	Category I Structures of the Original Plant Design
3.7.1-2	Periods for Spectral Values
3.7.1-3	Damping Ratios Used in Analysis of Category I Structures, Systems, Components, and Soil for Structures Listed in Table 3.7.1-1
3.7.1-3A	Damping Ratios Used in Analysis of Category 1 Equipment, Components, and Their Supports for Structures Listed in Table 3.7.1-1
3.7.1-4	Soil Supported Category I Structures
3.7.1-5	Pile and Caisson Supported Category I Structures
3.7.2-1	Summary of Varied Parameter Ranges Used in the Seismic Analysis of the Ice Condenser Basket Support Frame
3.7.2-2	Category I Structures Affected by Concrete Modulus Change for Structures Listed in Table 3.7.1-1
3.7.2-3	Deleted per Amendment 6
3.7.2-4	Deleted per Amendment 6
3.7.2-5	Deleted per Amendment 6
3.7.2-6	Shield Building Element and Mass Point Properties
3.7.2-7	Shield Building Periods of Natural Modes of Vibration
3.7.2-8	Deleted per Amendment 6
3.7.2-9	Deleted per Amendment 6
3.7.2-10	Interior Concrete Structure Element Properties
3.7.2-11	Interior Concrete Structure Mass Point Properties
3.7.2-12	Interior Concrete Structure Periods for Natural Modes of Vibration
3.7.2-13	Steel Containment Vessel Element Properties
3.7.2-14	Steel Containment Vessel Mass Point Properties
3.7.2-15	Steel Containment Vessel Periods for Natural Modes of Vibrations

LIST OF TABLES

Number	Title
3.7.2-16	Auxiliary-Control Building Element Properties
3.7.2-17	Auxiliary-Control Building Mass Point Properties
3.7.2-18	Auxiliary-Control Building Periods for Natural Modes of Vibration
3.7.2-19	Element Properties Additional Equipment Building Unit 1
3.7.2-20	Element Properties Additional Equipment Building Unit 2
3.7.2-21	Mass Point Properties Additional Equipment Building Unit 1
3.7.2-22	Mass Point Properties Additional Equipment Building Unit 2
3.7.2-23	Normal Modes of Vibration Additional Equipment Building Unit 1
3.7.2-24	Additional Equipment Building - Unit 2
3.7.2-25	Pumping Station Element Properties
3.7.2-26	Pumping Station Mass Point Properties
3.7.2-27	Pumping Station Periods for Natural Modes of Vibration
3.7.2-28	ERCW Pumping Station Element Properties for Mathematical Model
3.7.2-29	ERCW Pumping Station Mass Point Properties for Mathematical Model
3.7.2-30	ERCW Pumping Station Normal Modes of Vibration
3.7.2-31	Diesel-Generator Building Element Properties
3.7.2-32	Diesel-Generator Building Mass Point Properties
3.7.2-33	Diesel-Generator Building Periods for Normal Modes of Vibration
3.7.2-34	Waste Packaging Area Element Properties
3.7.2-35	Waste Packaging Area Mass Point Properties
3.7.2-36	Waste Packaging Area Stiffness of Soil Springs
3.7.2-37	Condensate Demineralizer Waste Evaporator Building Stiffness for Soil Springs

LIST OF TABLES

Number	Title
3.7.2-38	Condensate Demineralizer Waste Evaporator Building Element Properties
3.7.2-39	Condensate Demineralizer Waste Evaporator Building Mass Point Properties
3.7.2-40	Condensate Demineralizer Waste Evaporator Building Natural Periods of the Structural Model
3.7.2-41	East Steam Valve Room Element Properties
3.7.2-42	East Steam Valve Room Element Properties
3.7.2-43	East Steam Valve Room Mass Point Properties
3.7.2-44	East Steam Valve Room Spring Constants for Combined Caisson-Soil System
3.7.2-45	East Steam Valve Room Frequency Comparison for Three Soil Cases Horizontal Motion
3.8.1-1	Loading Combinations and Allowable Stresses for the Shield Building
3.8.1-2	Shield Building Equipment Hatch Doors and Sleeves Loads, Loading Combinations, and Allowable Stresses
3.8.2-1	Allowable Stress Criteria - Containment Vessel
3.8.2-2	Loading Combinations for Various Plant Conditions
3.8.3-1	Loading Combinations and Allowable Stresses for the Interior Concrete Structure
3.8.3-2	Loading Combinations and Load Factors
3.8.3-2A	Loading Combinations, Load Factors and Allowable Stresses for SG Compartment Roof Modification (5)(6)
3.8.3-3	Seals Between Upper and Lower Compartments
3.8.3-4	Personnel Access Doors in Crane Wall
3.8.3-5	Ice Condenser Allowable Limits
3.8.3-6	Original Design Stress Margin Table 3.8.3-1 Criteria Versus Table 3.8.3-2 Criteria
3.8.3-7	Equipment Access Hatch

LIST OF TABLES

Number	Title
3.8.3-8	Escape Hatch - Divider Barrier Floor - Load Combinations - Allowable Stresses
3.8.3-9	Air Return Duct Penetration
3.8.3-10	Maximum Stress - Summary (DBA x 1.2) Per Table 3.8.3-1 Criteria
3.8.3-11	Selection of Steels in Relation to Prevention of Non-Ductile Fracture of Ice Condenser Components
3.8.4-1	Auxiliary Control Building Concrete Structure Loads, Loading Combinations, and Allowable Stresses
3.8.4-2	Auxiliary Control Building Structural Steel Loads, Loading Conditions, and Allowable Stresses
3.8.4-3	Condenser Cooling Water Intake Pumping Station - Loading Cases, Allowable Stresses, Factors of Safety and Material Properties
3.8.4-4	Retaining Walls - Loading Cases, Allowable Stresses, Factors of Safety, and Material Properties
3.8.4-5	Control Room Shield Doors - Loads, Loading Combinations, and Allowable Stresses
3.8.4-6	Auxiliary Building Railroad Access Hatch Covers - Loads, Loading Combinations, and Allowable Stresses
3.8.4-7	Railroad Access Door - Loads, Loading Combinations, and Allowable Stresses
3.8.4-8	Manways in RHR Sump Valve Room - Loads, Loading Combinations, and Allowable Stresses
3.8.4-9	Pressure Confining Personnel Doors - Loads, Loading Combinations, and Allowable Stresses
3.8.4-10	Diesel Generator Building Doors and Bulkheads - Loads, Loading Combinations, and Allowable Stresses
3.8.4-11	Diesel Generator Building - Loads, Loading Combinations, Allowable Stresses and Material Properties
3.8.4-12	Primary and Refueling Water Pipe Tunnels - Loads, Loading Combinations, Allowable Stresses, and Material Properties

LIST OF TABLES

Number	Title
3.8.4-13	Class 1E Electrical Systems Structures - Loads, Loading Combinations, Allowable Stresses, and Material Properties
3.8.4-14	East Steam Valve Room - Loads, Load Combinations, Allowable Stresses, Factors of Safety and Material Properties
3.8.4-15	East Steam Valve Room - Structural Steel - Loading Combinations and Allowable Stresses for Structural Steel
3.8.4-16	ERCW Pumping Station Loads and Loading Combinations
3.8.4-17	Refueling Water Storage Tank Foundation
3.8.4-18	Spent Fuel Pool Gates Loads and Loading Combinations
3.8.6-1	Polar Cranes - Loads, Loading Combinations, and Allowable Stresses
3.8.6-2	Deleted
3.9.2-1	Codes and Other Criteria Governing the Analysis of TVA Class B, C, and D Components
3.9.2-2	Design Loading Combinations for Group Classes B, C, and D Components
3.9.2-3	Safety Class B, C, and D Component Loading Conditions and Stress Limits
3.9.2-4	Loading Combinations and Stress Limits for Safety Class B, C, and D Piping
3.9.2-5	Loading Combinations and Stress/Loading Limits for Safety Class B, C, and D Supports
3.9.3-1	Maximum Deflections for Reactor Internals Under Blowdown and Seismic Excitation
3.10.2-1	Load Combinations and Allowables for Cable Tray Supports
3.11.1-1	Electrical and Mechanical Equipment Required to Function During and/or After an Accident

LIST OF FIGURES

Number	Title
3.3.2-1	Variations of Differential Pressure and Tangential Plus Translational Velocity as a Function of the Distance from the Center of the Tornado
3.5.2-1	Ice Condenser Lower Inlet Door Opening, Typical Missile Trajectory Orientation
3.5.2-2	Location of Main Steam and Main Feedwater Containment Isolation Valves at Azimuth 0°
3.5.2-3	Location of Main Steam and Main Feedwater Containment Isolation Valves at Azimuth 180°
3.5.4-1	Comparison of Missile Formulas
3.5.4-2	Comparison of Missile Formulas
3.5.4-3	Depth of Missile Penetration for Tornado
3.5.4-4	Depth of Missile Penetration for Tornado
3.6.1-1	High Energy Classification Per Sequoyah Nuclear Plant Pipe Rupture Analysis Definition and Per Regulatory Guide 1.46 Definition
3.6.2-1	Location of Postulated Breaks
3.6.4-2	Jet Expansion Models
3.6.7-1	Steam Generators 1 and 4 Postulated Break Locations and Fixes
3.6.7-2	Steam Generators 2 and 3 Postulated Break Locations and Fixes
3.7.1-1	Mathematical Model for Soil-Structure Interaction
3.7.1-2	ERCW Access Dike
3.7.2-1	Mathematical Model of Reactor Internals
3.7.2-2	First Mode of Vibration of Reactor Internals
3.7.2-3	Model of Horizontal Lattice Frame Structure
3.7.2-4	Group of Six Interconnected Lattice Frames

LIST OF FIGURES

Number	Title
3.7.2-5	Typical Model of Lattice Frame
3.7.2-6	Typical Multi-Level Horizontal Dynamic Model of Lattice Frame Basket Assembly
3.7.2-7	Lattice Frame Ice Basket Gap
3.7.2-8	Typical Displacement Time Histories for 12 ft. Basket With End Supports - Pluck Test
3.7.2-9	Typical Crane Wall Acceleration
3.7.2-10	Typical Crane Wall Velocity
3.7.2-11	Typical Crane Wall Displacement
3.7.2-12	Typical Ice Basket Displacement Response
3.7.2-13	Typical Ice Basket Impact Force Response
3.7.2-14	Typical Crane Wall Panel Load Response
3.7.2-15	Nonlinear Dynamic Model Results Wall Panel Seismic Load Versus Gap Size
3.7.2-16	Nonlinear Dynamic Model Results Wall Panel Seismic Load Versus Gap Size
3.7.2-17	Nonlinear Dynamic Model Results Wall Panel Seismic Load Versus Gap Size
3.7.2-18	Nonlinear Dynamic Model Results Wall Panel Seismic Load Versus Gap Size
3.7.2-19	Nonlinear Dynamic Model Results Wall Panel Seismic Load Versus Gap Size
3.7.2-20	Nonlinear Dynamic Model Results Wall Panel Seismic Load Versus Gap Size
3.7.2-21	Nonlinear Dynamic Model Results Wall Panel Seismic Load Versus Gap Size
3.7.2-22	Nonlinear Dynamic Model Results Wall Panel Seismic Load Versus Gap Size
3.7.2-23	Nonlinear Dynamic Model Results Seismic Impact Load Versus Gap Size

LIST OF FIGURES

Number	Title
3.7.2-24	Nonlinear Dynamic Model Results Seismic Impact Load Versus Gap Size
3.7.2-25	Nonlinear Dynamic Model Results Seismic Impact Load Versus Gap Size
3.7.2-26	Nonlinear Dynamic Model Results Seismic Impact Load Versus Gap Size
3.7.2-27	Nonlinear Dynamic Model Results Seismic Impact Load Versus Gap Size
3.7.2-28	Nonlinear Dynamic Model Results Seismic Impact Load Versus Gap Size
3.7.2-29	Nonlinear Dynamic Model Results Seismic Impact Load Versus Gap Size
3.7.2-30	Nonlinear Dynamic Model Results Seismic Impact Load Versus Gap Size
3.7.2-31	Original Accelerogram
3.7.2-32	Accelerogram After Integration and Differentiation
3.7.2-33	Nonlinear Dynamic Model
3.7.2-34	Section Through Reactor Shield Building Looking West, Lumped Mass Model for Dynamic Analysis
3.7.2-35	Flowchart of Operations for Response of the Dome
3.7.2-36	Shell Model for Dome Analysis - Shield Building
3.7.2-37	Lumped Mass Model for Dome Analysis - Shield Building
3.7.2-38	Reactor Building, Interior Concrete Structure Sectional Elevation Looking West, Lumped Mass Model for Dynamic Analysis
3.7.2-39	Steel Containment Vessel, Lumped Mass Model for Dynamic Analysis
3.7.2-40	Steel Containment Vessel, Finite Element Model
3.7.2-41	Sectional Elevation of Auxiliary Control Building Lumped Mass Model for Dynamic Analysis

LIST OF FIGURES

Number	Title
3.7.2-42	Additional Equipment Building - Unit 1
3.7.2-43	Additional Equipment Building - Unit 2
3.7.2-44	Sectional Elevation of Intake Pumping Station, Lumped Mass Model for Dynamic Analysis
3.7.2-45	ERCW Pumping Station - Model for Dynamic Analysis Sectional Elevation
3.7.2-46	ERCW Pumping Station - Key Plan
3.7.2-47	Sectional Elevation of Diesel Generator Building, Lumped Mass Model for Dynamic Analysis
3.7.2-48	Sectional Elevation of Waste Packaging Area, Lumped Mass Model for Dynamic Analysis
3.7.2-49	Response Acceleration Spectra
3.7.2-50	Condensate Demineralizer Waste Evaporator Building - Mathematical Model for Dynamic Analysis
3.7.2-51	Averaged Ground Response Spectrum
3.7.2-52	Concrete Caisson
3.7.2-53	East Valve Room - Lumped Mass and Spring Model
3.7.2-54	Interior Concrete Structure N-S Translational Motion, Translational Mode 1
3.7.2-55	Interior Concrete Structure N-S Translational Motion, Translational Mode 2
3.7.2-56	Deleted by Amendment 6
3.7.2-57	Interior Concrete Structure E-W Translation Plus Torsion, Translational Mode 1
3.7.2-58	Interior Concrete Structure E-W Translation Plus Torsion, Translational Mode 2
3.7.2-59	Interior Concrete Structure E-W Translation Plus Torsion, Translational Mode 3

LIST OF FIGURES

Number	Title
3.7.2-60	Interior Concrete Structure E-W Translational Plus Torsion, Translational Mode 4
3.7.2-61	Interior Concrete Structure E-W Translational Plus Torsion, Translational Mode 5
3.7.2-62	Interior Concrete N-S Translation Response, Maximum Acceleration, Safe Shutdown Earthquake
3.7.2-63	Interior Concrete N-S Translation Response, Maximum Deflection, Safe Shutdown Earthquake
3.7.2-64	Interior Concrete N-S Translation Response, Maximum Shear, Safe Shutdown Earthquake
3.7.2-65	Interior Concrete N-S Translation Response, Maximum Bending Moment, Safe Shutdown Earthquake
3.7.2-66	Interior Concrete E-W Translation Plus Torsion Response, Maximum Acceleration, Safe Shutdown Earthquake
3.7.2-67	Interior Concrete E-W Translation Plus Torsion Response, Maximum Deflection, Safe Shutdown Earthquake
3.7.2-68	Interior Concrete E-W Translation Plus Torsion Response, Maximum Shear, Safe Shutdown Earthquake
3.7.2-69	Interior Concrete E-W Translation Plus Torsion Response, Maximum Bending Moment, Safe Shutdown Earthquake
3.7.2-70	Interior Concrete E-W Translation Plus Torsion Response, Maximum Angular Acceleration, Safe Shutdown Earthquake
3.7.2-71	Interior Concrete E-W Translation Plus Torsion Response, Maximum Angular Displacement, Safe Shutdown Earthquake
3.7.2-72	Interior Concrete E-W Translation Plus Torsion, Response Maximum Torque, Safe Shutdown Earthquake
3.7.2-73	Response Acceleration Spectrum, Reactor Building Interior Concrete, NS Mass Point No. 1, Safe Shutdown Earthquake
3.7.2-74	Response Acceleration Spectrum, Reactor Building Interior Concrete, EW Mass Point No. 1, Safe Shutdown Earthquake
3.7.2-75	Response Acceleration Spectrum Reactor Building Interior Concrete, NS Mass Point No. 6, Safe Shutdown Earthquake

LIST OF FIGURES

Number	Title
3.7.2-76	Response Acceleration Spectrum Reactor Building Interior Concrete, EW Mass Point No. 6, Safe Shutdown Earthquake
3.7.2-77	Flow Chart for Development of Floor Response Spectra
3.7.2-78	Comparison of Time History and Response Spectrum Response
3.7.2-79	Replacement Steam Generator One-Stick Model
3.8.1-1	Temperature Gradient
3.8.2-1	Structural Steel Containment Vessel
3.8.2-2	Layout of Containment Shell
3.8.2-3	Containment Panel Analysis - Finite Element Model
3.8.2-4	Pressure - Time Function of Local Detonation
3.8.2-5	Graphical Representation of Pressure Function
3.8.2-6	Hydrogen Explosion - Containment Panel Analysis - Finite Element Model of Shell Segment
3.8.2-7	Structural Steel Containment Vessel Anchor Bolt Plan and Base Details
3.8.2-8	Steel Containment Vessel, Lumped Mass Model for Dynamic Analysis
3.8.2-9	Steel Containment Vessel, Finite Element Model
3.8.2-10	Steel Containment Vessel, Finite Element Model
3.8.2-11	Expansion Bellows For Personnel Locks
3.8.3-1	Seals Between Ice Condenser and Containment Vessel Arrangement
3.8.3-2	Temperature Gradient
3.8.4-1	Concrete Floor Design Data
3.8.4-2	D. G. Building Doors and Bulkhead Arrangement
3.8.4-3	Concrete-Pipe Tunnels and Tank FDNS Outline
3.8.4-4	Concrete-Pipe Tunnels and Tank FDNS Outline

LIST OF FIGURES

Number	Title
3.8.4-5	Category 1 Yard Electrical Manholes and Handholes
3.8.4-6	Concrete-Manholes and Handholes - Outline
3.8.4-7	Concrete - ERCW Pumping Station and ERCW Channel
3.8.4-8	Concrete - ERCW Pumping Station
3.8.4-9	Concrete ERCW Skimmer Wall and Underwater Dam
3.8.4-10	Concrete ERCW Discharge Box
3.8.4-11	Spent Fuel Pool Gate
3.8.6-1	RB 175 Ton Polar Cranes
3.8.6-2	RB 175 Ton Polar Cranes, Trolley
3.8.6-3	RB 175 Ton Polar Cranes, Trolley
3.8.6-4	RB 175 Ton Polar Cranes, Bridge
3.8.6-5	RB 175 Ton Polar Cranes
3.8.6-6	AB 125 Ton Crane
3.8.6-7	AB 125 Ton Crane Trolley
3.8.6-8	AB 125 Ton Crane Trolley
3.8.6-9	AB 125 Ton Crane Bridge
3.8.6-10	AB 125 Ton Crane Limit Switch
3.8.6-11	AB 125 Ton Crane Mechanical Stop
3.8.6-12	Sectional Elevation View Through the Spent Fuel Pit
3.9.1-1	Upper Internals Assembly
3.9.1-2	Upper Internal Support Model
3.9.1-3	Computer Geometry Plot of Lower Internals Support Model
3.9.1-4	Lower Internals Support Structure Comparison Between Experimental and Theoretical Vertical Deflections

LIST OF FIGURES

Number	Title
3.9.1-5	Reactor Vessel and Internals Vibration
3.9.1-6	Thermal Shield, Mode Shape n=4 Obtained from Shaker Test
3.9.1-7	Thermal Shield, Maximum Amplitude of Vibration During Preoperational Tests
3.9.1-8	Time-History Dynamic Solution for LOCA Loading
3.9.2-1	Reactor Coolant Piping Pressurizer Surge Line

3.0 DESIGN CRITERIA STRUCTURES, COMPONENTS, EQUIPMENT AND SYSTEMS

3.1 CONFORMANCE WITH NRC GENERAL DESIGN CRITERIA

3.1.1 Single Failure Criteria

Each of the Engineered Safety Features is designed to tolerate a single failure during the period of recovery following an incident without loss of its protection functions. This period of recovery consists of two segments; the short-term period and the long-term period.

During the short-term period, the single failure is limited to a failure of an active component to complete its function as required. Should the single failure occur during the long-term period rather than the short term, the Engineered Safety-Related System is designed to tolerate an active failure or a passive failure without loss of its protective function.

The following definitions are applicable to terms that pertain to the single failure criterion:

Period of Recovery. The time necessary to bring the plant to safe shutdown and regain access to faulted equipment. The recovery period is the sum of the short-term and long-term periods defined below. Note that safe shutdown is used here in lieu of cold shutdown. SQN is a hot standby plant, not a cold shutdown plant. (Reference: NUREG 0011 & supplement 1; and NUREG 1232, Volume 2, pg. 2-7).

Incident. Any natural or accidental event of infrequent occurrence and its related consequences which affect the plant operation and require the use of engineered safeguards systems. Such events, which are analyzed independently and are not assumed to occur simultaneously, include the loss-of-coolant accident, steam line ruptures, steam generator tube ruptures, etc. A loss of offsite power may be an isolated occurrence or may be concurrent with any event requiring engineered safeguards systems use.

Short Term. The time immediately following the incident during which automatic actions are performed, system responses are checked, type of incident is identified and preparations for long-term recovery operation are made. The short term is the first 24 hours following initiation of engineered safeguards system operations.

Long Term. The remainder of the recovery period following the short term. In comparison with the short term where the main concern is to remain within Nuclear Regulatory Commission specified site criteria, the long-term period of operation involves bringing the plant to safe shutdown conditions where faulted equipment can be accessed and repaired. Note that safe shutdown is used here in lieu of cold shutdown. SQN is a hot standby plant, not a cold shutdown plant. (Reference: NUREG 0011 & supplement 1; and NUREG 1232 volume 2, pg. 2-7).

Active Failure. The failure of a powered component such as a piece of mechanical equipment, component of the electrical supply system or instrumentation and control equipment to act on command to perform its design function. Examples include the failure of a motor-operated valve to move to its correct position, the failure of an electrical breaker or relay to respond, the failure of a pump, fan or diesel generator to start, etc.

Equipment moving spuriously from the proper safeguards position without signal, such as a motor-operated valve inadvertently shutting at the moment it is required, is not considered credible.

Passive Failure. The structural failure of a static component which limits the components effectiveness in carrying out its design function. When applied to a fluid system, this means a break in the pressure boundary resulting in abnormal leakage not exceeding 50 gal/min for 30 minutes. Such leak rates are consistent with limited cracks in pipes, sprung flanges, valve packing leaks or pump seal failures.

3.1.2 Overall Requirements

The Sequoyah Nuclear Plant was designed to meet the intent of the Proposed General Design Criteria for Nuclear Power Plant Construction Permits published in July, 1967. The Sequoyah construction permit was issued in May, 1970. This FSAR, however, addresses the NRC General Design Criteria (GDC) published as Appendix A to 10 CFR 50 in July 1971.

Each criterion is followed by a discussion of the design features and procedures which meet the intent of the criteria. Any exception to the 1971 GDC resulting from the earlier commitments is identified in the discussion of the corresponding criterion. References to other sections of the FSAR are given for system design details.

Criterion 1 - Quality Standards and Records

Structures, systems, and components important to safety shall be designed, fabricated, erected, and tested to quality standards commensurate with the importance of the safety functions to be performed. Where generally recognized codes and standards are used, they shall be identified and evaluated to determine their applicability, adequacy, and sufficiency and shall be supplemented or modified as necessary to assure a quality product in keeping with the required safety function. A Quality Assurance Program shall be established and implemented in order to provide adequate assurance that these structures, systems, and components will satisfactorily perform their safety functions. Appropriate records of the design, fabrication, erection and testing of structures, systems, and components important to safety shall be maintained by or under the control of the nuclear power unit licensee throughout the life of the unit.

Compliance

Discussions related to the applicable codes, design criteria and standards used in the design of particular systems are contained in the appropriate FSAR sections and in Tables 3.2.1-1, 3.2.1-2, 3.2.1-3, 3.2.2-1 and 3.2.2-2.

The Quality Assurance Program conforms to the requirements of 10 CFR 50 Appendix B, "Quality Assurance Criteria for Nuclear Power Plant." Details of the program are given in Chapter 17 and the TVA Nuclear Quality Assurance Plan.

Criterion 2 - Design Bases for Protection Against Natural Phenomena.

Structures, systems, and components important to safety shall be designed to withstand the effects of natural phenomena such as earthquakes, tornadoes, hurricanes, floods, tsunami, and

seiches without loss of capability to perform their safety function. The design bases for these structures, systems, and components shall reflect:

1. Appropriate consideration of the most severe of the natural phenomena that have been historically reported for the site and surrounding area, with sufficient margin for the limited accuracy, quantity, and period of time in which the historical data have been accumulated,

2. Appropriate combinations of the effects of normal and accident conditions with the effects of the natural phenomena, and

3. The importance of the safety functions to be performed.

Compliance

The structures, systems, and components important to safety are designed to either withstand the effects of natural phenomena without loss of capability to perform their safety functions, or to fail in the safest condition. Those structures, systems, and components vital to the shutdown capability of the reactor are designed to withstand the maximum probable natural phenomenon expected at the site, determined from recorded data for the site vicinity, with appropriate margin to account for uncertainties in historical data. Appropriate combinations of normal, accident, and natural phenomena structural loadings are considered in the plant design.

The nature and magnitudes of the natural phenomena considered in the design of this plant are discussed in subsections 2.3, 2.4, and 2.5. Subsections 3.2 through 3.11 discuss the design of the plant in relationship to natural events. Seismic and safety classifications, as well as other pertinent standards and information, are given in the sections listed above and those sections discuss individual structures and components.

Criterion 3 - Fire Protection.

Structures, systems, and components important to safety shall be designed and located to minimize, consistent with other safety requirements, the probability and effect of fires and explosions. Noncombustible and heat-resistant materials shall be used wherever practical throughout the unit, particularly in locations such as the containment and control room. Fire detection and fighting systems of appropriate capacity and capability shall be provided and designed to minimize the adverse effects of fires on structures, systems, and components important to safety. Fire-fighting systems shall be designed to assure that their rupture or inadvertent operation does not significantly impair the safety capability of these structures, systems, and components.

Compliance

The plant is designed to minimize the probability of fires and explosions, and in the event of such occurrences to minimize the potential effects of such events to plant safety-related equipment and personnel. Prime consideration is given to these requirements throughout the design process by providing for the duplication and physical separation of components in plant design and the use of materials classified as noncombustible and/or fire resistant wherever practical in all areas of the plant. Equipment and facilities for fire protection, including detection, alarm, and

extinguishment are provided to protect both plant equipment and personnel from fire, explosion, and the resultant release of toxic vapors. Fire-fighting systems are designed to assure that their rupture or inadvertent operation will not impair systems important to safety. All portions of the Fire Protection Systems necessary to protect safety-related equipment in Class I structures are designed to seismic requirements.

All systems are designed and installed in accordance with the applicable requirements as described in the Fire Protection Report (see 9.5.1). The Fire Protection System is designed such that a failure of any component of the system or inadvertent operation:

1. Will not cause a nuclear accident or significant release of radioactivity to the environment.

2. Will not impair the ability of equipment to safely shut down and isolate the reactor or limit the release of radioactivity to the environment in the event of a postulated accident.

The Fire Protection Systems for the Sequoyah Nuclear Plant are discussed in the Fire Protection Report.

Criterion 4 - Environmental and Missile Design Bases.

Structures, systems, and components important to safety are designed to accommodate the effects of and to be compatible with the environmental conditions associated with normal operation, maintenance, testing, and postulated accidents, including LOCA. These structures, systems and components shall be appropriately protected against dynamic effects, including the effects of missiles, pipe whipping, and discharging fluids, that may result from equipment failures and from events and conditions outside the nuclear power unit.

Compliance

Structures, systems, and components important to safety are designed to accommodate the effects of and to be compatible with the environmental conditions associated with normal operation, maintenance, testing, and postulated accidents. The associated environmental parameters are identified and incorporated in the design requirements and specifications.
Particular care is given to the extreme environmental conditions associated with major incidents such as a loss of coolant. Required equipment and instrumentation are identified, environmental conditions such as temperature, pressure, humidity, irradiation, etc., are calculated, and the effects of the latter on the former are evaluated either analytically or experimentally. The dynamic effects associated with an accident are carefully identified and assurance is given that the structures and systems (including engineered safeguards) assumed undamaged in the total assessment of the accident consequences are suitably protected.

Emergency core cooling components are austenitic stainless steel or equivalent corrosion-resistant material and hence are compatible with the containment atmosphere over the full range of exposure during the postaccident conditions.

Where vital components cannot be located away from potential missiles, protective walls and slabs, local missile shielding, and restraining devices are provided to protect the containment and engineered safety feature components within the containment against damage from missiles generated by the equipment failures associated with the DBA.

The environmental design of safety-related items is discussed in subsection 3.8 on the design of structures, subsections 6.2.2 and 6.2.3 on containment heat removal and air purification and subsection 9.4 on ventilation systems. Safety-related systems and components use the input from these sections for design as discussed in subsection 3.11. The missile and environmental protection given each system is discussed with the individual system in Chapters 3 through 11.

Criterion 5 - Sharing of Structures, Systems, and Components.

Structures, systems, and components important to safety shall not be shared between nuclear power units unless it is shown that such sharing will not significantly impair their ability to perform their safety functions, including, in the event of an accident in one unit, an orderly shutdown and cooldown of the remaining units.

Compliance

The two units share several structures and systems, many of which have no safety function. The structures important to safety are the Auxiliary/Control Building (subsection 3.8), Diesel Generator Building (subsection 3.8), CCW Pumping Station (subsection 3.8), the ERCW pumping station (subsection 3.8), and a few miscellaneous structures. Shared safety-related systems include the ERCW (subsection 9.2), component cooling water (subsection 9.2), fire protection (subsection 9.5), fuel handling/storage and cooling (subsection 9.1), fuel oil storage (subsection 9.5), preferred and emergency electric power (subsections 8.2 and 8.3, respectively), chemical and volume control (subsection 9.3), condensate (subsection 9.2), radioactive waste (Chapter 11), Gas Treatment System (subsection 6.2), and Control and Auxiliary Building Ventilation Systems (subsections 6.4 and 9.4). The Vital Direct-Current Power System is shared to the extent that a few loads (e.g., the vital inverters) in one nuclear unit are energized by the direct-current power channels assigned primarily to power loads of the other unit. In no case does the sharing inhibit the safe shutdown of one unit while the other unit is experiencing an accident. All shared systems are sized for all credible initial combinations of normal and accident states for the two units, with appropriate isolation to prevent an accident condition in one unit from carrying into the other.

Criterion 10 - Reactor Design.

The reactor core and associated coolant, control, and protection systems shall be designed with appropriate margin to assure that specified acceptable fuel design limits are not exceeded during any condition of normal operation, including the effects of anticipated operational occurrences.

Compliance

The reactor core with its related coolant, control, and protection systems is designed to function throughout its design lifetime without exceeding acceptable fuel damage limits. The Reactor Trip System is designed to actuate a reactor trip, when necessary, for any anticipated combination of plant conditions, to ensure that fuel design limits are not exceeded. The core design, together with reliable process and decay heat removal systems, provides for this capability under all expected conditions of normal operation with appropriate margins for uncertainties and anticipated transient situations, including the effects of the loss of reactor coolant flow, trip of the turbine-generator, loss of normal feedwater, and loss of power.

Chapter 4 discusses the design bases and design evaluation of reactor components. Chapter 5 discusses the Reactor Coolant System. The details of the Reactor Trip and Engineered Safety Features Actuation Systems design and logic are discussed in Chapter 7. This information supports the accident analyses presented in Chapter 15.

Criterion 11 - Reactor Inherent Protection.

The reactor core and associated coolant systems shall be designed so that in the power operating range the net effect of the prompt inherent nuclear feedback characteristics tends to compensate for a rapid increase in reactivity.

Compliance

A negative reactivity coefficient is a basic feature of core nuclear design as discussed in Chapter 4.

Criterion 12 - Suppression of Reactor Power Oscillations.

The reactor core and associated coolant, or, control and protection systems shall be designed to assure that power oscillations which can result in conditions exceeding specified acceptable fuel design limits are not possible or can be reliably and readily detected and suppressed.

Compliance

Power oscillations of the fundamental mode are inherently eliminated by the negative Doppler and nonpositive moderator temperature coefficient of reactivity.

Oscillations, due to xenon spatial effects, in the radial, diametral and azimuthal overtone modes are heavily damped due to the inherent design and due to the negative Doppler and nonpositive moderator temperature coefficients of reactivity.

Oscillations, due to xenon spatial effects, in the axial first overtone mode may occur. Assurance that fuel design limits are not exceeded by xenon axial oscillations is provided as a result of reactor trip functions using the measured axial power imbalance as an input.

Oscillations, due to xenon spatial effects, in axial modes higher than the first overtone, are heavily damped due to the inherent design and due to the negative Doppler coefficient of reactivity.

The stability of the core against xenon-induced power oscillations and the functional requirements of instrumentation for monitoring and measuring core power distribution are discussed in subsection 4.3, Nuclear Design. Details of the instrumentation design and logic are discussed in Chapter 7.

Criterion 13 - Instrumentation and Control.

Instrumentation and control shall be provided to monitor variables and systems over their anticipated ranges for normal operation for anticipated operational occurrences, and for accident conditions as appropriate to assure adequate safety, including those variables and systems that

can affect the fission process, the integrity of the reactor core, the reactor coolant pressure boundary, and the containment and its associated systems. Appropriate controls shall be provided to maintain these variables and systems within prescribed operating ranges.

Compliance

Instrumentation and controls are provided to monitor and control neutron flux, control rod position, temperatures, pressures, flows, and levels as necessary to assure that adequate plant safety can be maintained. Instrumentation is provided in the Reactor Coolant System, Steam and Power Conversion System, the Containment, Engineered Safety Features Systems, Radiological Waste Systems, and other auxiliaries. Parameters that must be provided for operator use under normal operating and accident conditions are indicated in the control room in proximity with the controls for maintaining the indicated parameter in the proper range.

The quantity and types of process instrumentation provided ensures safe and orderly operation of all systems over the full design range of the plant. These systems are described in Chapters 5, 6, 7, 8, 9, 10, 11, and 12.

Criterion 14 - Reactor Coolant Pressure Boundary.

The reactor coolant pressure boundary shall be designed, fabricated, erected, and tested so as to have an extremely low probability of abnormal leakage or rapidly propagating failure and of gross rupture.

Compliance

The reactor coolant pressure boundary is designed to accommodate the system pressures and temperatures attained under all expected modes of plant operation, including all anticipated transients, and to maintain the stresses within applicable stress limits. In addition to the loads imposed on the piping under operating conditions, consideration is also given to abnormal loadings such as pipe rupture and seismic loadings as discussed in subsections 3.6 and 3.7. The piping is protected from overpressure by means of pressure relieving devices as required by applicable codes.

Reactor coolant pressure boundary materials selection and fabrication techniques ensure a low probability of gross rupture or significant leakage. The materials of construction are protected from corrosion which might otherwise reduce its structural integrity during its service lifetime, by control of coolant chemistry. Also, there are provisions for inspections, testing, and surveillance of critical areas to assess the structural and leaktight integrity (subsection 5.2). For the reactor vessel, a material surveillance program conforming to applicable codes is provided (subsection 5.4). Means are provided to detect significant uncontrolled leakage with indication in the main control room (subsection 5.2).

Criterion 15 - Reactor Coolant (RC) System Design.

The RC System and associated auxiliary, control, and protection systems shall be designed with sufficient margin to assure that the design conditions of the reactor coolant pressure boundary are not exceeded during any condition of normal operation, including anticipated operational occurrences.

Compliance

Transient analyses are included in RC System design which conclude that design conditions are not exceeded during normal operation. Protection and control set points are based on these transient analyses.

Additionally, reactor coolant pressure boundary components achieve a large margin of safety by the use of proven ASME materials and design codes, use of proven fabrication techniques, nondestructive shop testing and integrated hydrostatic testing of assembled components.

The effect of radiation embrittlement is considered in reactor vessel design, and surveillance samples will be used to monitor adherence to expected conditions throughout plant life.

Multiple safety and relief valves are provided for the Reactor Coolant System. These valves and their set points meet ASME criteria for overpressure protection. The ASME criteria are satisfactory based on a long history of industry use. Chapter 5 discusses RC System design.

Criterion 16 - Containment Design.

Reactor containment and associated systems shall be provided to establish an essentially leaktight barrier against the uncontrolled release of radioactivity to the environment and to assure that the containment design conditions important to safety are not exceeded for as long as postulated accident conditions require.

Compliance

The reactor containment (subsection 6.2) is a freestanding, continuous steel membrane structure. The ice condenser inside containment (subsection 6.2) assists in limiting containment pressure to a value less than design pressure both during and after a LOCA. A concrete shield building, surrounding the steel vessel, allows for collection of any containment leakage which is subsequently processed by the Emergency Gas Treatment System (subsection 6.2) before release to the environment. A containment spray system (subsection 6.2), which supplements the ice condenser in limiting pressure, also provides long-term cooling following a LOCA. The design pressure is not exceeded in any pressure transients which result from combining the effects of heat sources with minimal operation of the Engineered Safety Features.

The Containment System is designed to provide for protection of the public from the consequences of a LOCA based on a postulated break of the reactor coolant piping up to and including a double-ended break of the largest reactor coolant pipe. Periodic leak rate measurements ensure that the containment barrier is maintained within regulatory limits.

Criterion 17 - Electric Power Systems.

An onsite electric power system and an offsite electric power system shall be provided to permit functioning of structures, systems, and components important to safety. The safety function for each system (assuming the other system is not functioning) shall be to provide sufficient capacity and capability to assure that (1) specified acceptable fuel design limits and design conditions of the reactor coolant pressure boundary are not exceeded as a result of anticipated operational occurrences and (2) the core is cooled and containment integrity and other vital functions are maintained in the event of postulated accidents.

The onsite electric power sources, including the batteries, and the onsite electric distribution system, shall have sufficient independence, redundancy, and testability to perform their safety functions assuming a single failure. Electric power from the transmission network to the onsite Electric Distribution System shall be supplied by two physically independent circuits (not necessarily on separate rights of way) designed and located so as to minimize to the extent practical the likelihood of their simultaneous failure under operating and postulated accident and environmental conditions. A switchyard common to both circuits is acceptable. Each of these circuits shall be designed to be available in sufficient time following a loss of all onsite alternating current power supplies and the other offsite electric power circuit, to assure that specified acceptable fuel design limits and design conditions of the reactor coolant pressure boundary are not exceeded. One of these circuits shall be designed to be available within a few seconds following a LOCA to assure that core cooling, containment integrity, and other vital safety functions are maintained.

Provisions shall be included to minimize the probability of losing electric power from any of the remaining sources as a result of, or coincident with, the loss of power generated by the nuclear power unit, the loss of power from the transmission network, or the loss of power from the onsite electric power sources.

Compliance

The capacity and capability of either the onsite or offsite electric power system is sufficient to assure that (1) specified fuel design limits and design conditions of the reactor coolant pressure boundary are not exceeded as a result of anticipated operational occurrences and (2) the core is cooled and containment integrity and other vital functions are maintained in the event of postulated accidents.

Onsite Electrical Power System

The Onsite Electrical Power System serves both nuclear power units and certain common plant equipment. It consists of two independent diesel generator systems, two redundant Class IE electric power distribution trains, and four redundant vital instrument and control power channels, each provided with a battery, battery charger, and inverter for each unit. Each redundant onsite power supply, train, and channel has the capability and capacity to supply the required safety loads assuming the failure of its redundant counterpart.

Offsite Electrical Power System

The offsite electrical power source consists of two physically independent circuits which are normally energized. One of these circuits is immediately available (within a few seconds) following a LOCA. The offsite sources are discussed in Section 8.2. Power is normally provided via the Unit Station Service Transformers, but may be provided via the Common Station Service Transformers.

For a detailed description and analysis of the Electric Power System refer to Chapter 8 of the FSAR.

Criterion 18 - Inspection and Testing of Electric Power Systems.

Electric Power Systems important to safety shall be designed to permit appropriate periodic inspection and testing of important areas and features, such as wiring, insulation, connections,

and switchboards, to assess the continuity of the systems and the condition of their components. The systems shall be designed with a capability to test periodically (1) the operability and functional performance of the components of the systems, such as onsite power sources, relays, switches, and buses, and (2) the operability of the systems as a whole and, under conditions as close to design as practical, the full operation sequence that brings the systems into operation, including operation of applicable portions of the protection system, and the transfer of power among the nuclear power unit, the offsite power system and the onsite power system.

Compliance

Inspection

In addition to continuous surveillance by visual and audible alarms for any abnormal condition, the onsite power system is designed to permit inspection and checking of wiring, insulation, connections, and switchboards to the extent that personnel safety is not jeopardized, equipment not damaged, and the plant not exposed to accidental tripping.

On-Line Testing

The onsite power system is designed with provision for periodic testing during normal operation with the unit on line, to the extent that the plant is not exposed to accidental tripping and the reliability of the safety system not degraded. These features include provisions for automatic starting and loading of onsite diesels, and starting and loading of individual or groups of engineered safeguards to their respective buses. The system is also designed to permit testing of larger integrated segments of the system during planned cooldown of the Reactor Coolant System.

Off-Line Testing

The onsite power system is designed with facilities for a complete test of the operability of the system from initiation of protection system, starting and loading of diesels, transfer of power sources, and, as close to the design as practical, the full operational sequence of the safety related systems.

Inspection and testing of electrical power systems is further described in subsections 8.3.1.1 and 8.3.2.1 of the FSAR.

Criterion 19 - Control Room.

A control room shall be provided from which actions can be taken to operate the nuclear power unit safely under normal conditions and to maintain it in a safe condition under accident conditions, including LOCA. Adequate radiation protection shall be provided to permit access and occupancy of the control room under accident conditions without personnel receiving radiation exposures in excess of 5-rem whole body, or its equivalent to any part of the body, for the duration of the accident.

Equipment at appropriate locations outside the control room shall be provided (1) with a design capability for prompt hot shutdown of the reactor, including necessary instrumentation and controls to maintain the unit in a safe condition during hot shutdown, and (2) with a potential capability for subsequent cold shutdown of the reactor through the use of suitable procedures.

Compliance

The plant is provided with a separate enclosure designated as the control building. Within the control building are located the main control room, auxiliary instrument room, computer room, battery and dc equipment rooms , switchyard relay room, plant communications room and service facilities (office space, kitchen, toilet facilities, and mechanical equipment room for heating, ventilation, and air-conditioning equipment).

The Main Control Room is provided with unit control panels for each of the two units, the switchyard, dc distribution, operation of the Diesel Generator System, and for those systems shared by the two units. The unit control panels contain those instruments and controls necessary for operation of the unit functions such as the reactor and its auxiliary system, turbine generator, and the steam and power conversion systems. Selection of loading from the various plant electrical distribution boards such as the unit boards, common boards, and shutdown boards, can be accomplished from the unit control panels.

The control room is designed and equipped to minimize the possibility of events such as fire, high radiation levels, excessive temperature, etc., which might preclude occupancy. The main control room is continuously occupied by qualified operating personnel under all operating and accident conditions except in the case of events such as fire or smoke which could necessitate its evacuation. In the unlikely event that control room occupancy becomes impossible, provisions have been made to bring the reactor units to, and maintain them in, a hot standby condition from locations external to the main control room.

Sufficient shielding, distance, and containment integrity are provided to assure that under postulated accident conditions control room personnel shall not be subjected to radiation doses which would exceed 5 rem to the whole body, or its equivalent to any part of the body, including doses received during both ingress and egress. Control room ventilation is provided by a system having a large percentage of recirculated air. After an accident, makeup air will automatically be routed through a system of HEPA and charcoal filters.

The design of the control room for occupancy during accidents is discussed in subsection 6.4, Habitability Systems. The heating, ventilation, and air-conditioning of the control building is discussed in subsection 9.4. Radiation doses to control room personnel following a LOCA are evaluated in subsection 15.5.3.

Criterion 20 - Protection System Functions.

The Protection System shall be designed (1) to initiate automatically the operation of appropriate systems including the reactivity control systems, to assure that specified acceptable fuel design limits are not exceeded as a result of anticipated operational occurrences and (2) to sense accident conditions and to initiate the operation of systems and components important to safety.

Compliance

A fully automatic protection system (with appropriate redundant channels) is provided to cope with transients where insufficient time is available for manual corrective action. The design basis for all protection systems is in accord with IEEE Standard 279-1971. The Reactor Protection System automatically initiates a reactor trip when any monitored variable or combination of variables exceeds its normal operating range.

Setpoints are chosen to provide an envelope of safe operating conditions with adequate margin for uncertainties to ensure that fuel design limits are not exceeded.

Reactor trip is initiated by removing power to the rod drive mechanisms of all the full length rod cluster control assemblies. This will allow the assemblies to free fall into the core, rapidly reducing the reactor power output.

The Engineered Safety Features Actuation System automatically initiates emergency core cooling, and other safeguards functions, by sensing accident conditions using redundant process channels measuring diverse parameters. Manual actuation of safeguards is relied upon where ample time is available for operator action. The Engineered Safety Features Actuation System also provides a reactor trip on manual or automatic safety injection (S) signal generation.

The response and adequacy of the protection systems is analyzed for all conditions specified by the ANSI N18.2 standard, through Condition IV.

Criterion 21 - Protection System Reliability and Testability.

The Protection System shall be designed for high functional reliability and inservice testability commensurate with the safety functions to be performed. Redundancy and independence designed into the Protection System shall be sufficient to assure that (1) no single failure results in loss of the protection function and (2) removal from service of any component or channel does not result in loss of the required minimum redundancy unless the acceptable reliability of operation of the Protection System can be otherwise demonstrated. The Protection System shall be designed to permit periodic testing of its functioning when the reactor is in operation, including a capability to test channels independently to determine failures and losses of redundancy that may have occurred.

Compliance

The Protection System is designed for high functional reliability and inservice testability. The design employs redundant logic trains and measurement and equipment diversity.

The Protection System is designed in accordance with IEEE Standard 279-1971. All safety actuation circuitry is provided with a capability for testing with the reactor at power. The Protection Systems, including the engineered safety features test cabinet comply with Regulatory Guide 1.22 on periodic testing of Protection System actuation functions. Under the present design, there are protective functions which are not tested at power. The functions can be tested under shutdown plant conditions, so that they do not interrupt power operation as allowed by Regulatory Guide 1.22.

In those cases where equipment cannot be tested at power, it is only the device function which is not tested. The logic associated with the devices has the capability for testing at power. Such testing will disclose failures or reduction in redundancy which may have occurred. Removal from service of any single channel or component does not result in loss of minimum required redundancy. For example, a two-of-three function becomes a one-of-two function when one channel is removed. (Note that this is not true for the logic trains which are effectively a one-out-of-two logic.)

Semiautomatic testers are built into each of the two logic trains in a protection system. These testers have the capability of testing the major part of the protection systems very rapidly while the reactor is at power. Between tests, the testers continuously monitor a number of internal protection system points including the associated power supplies and fuses. Outputs of the monitors are logically processed to provide alarms for failures in one train and automatic reactor trip for failures in both trains. A self-testing provision is designed into each tester. Additional details can be found in subsections 7.2 and 7.3.

The Process Protection System performs automatic surveillance testing of the digital process protection racks via a portable Man Machine Interface (MMI) test cart as described in subsection 7.2.

Criterion 22 - Protection System Independence.

The Protection System shall be designed to assure that the effects of natural phenomena, and of normal operating, maintenance, testing, and postulated accident conditions on redundant channels do not result in loss of the protection function, or shall be demonstrated to be acceptable on some other defined basis. Design techniques, such as function diversity or diversity in component design and principles of operation, shall be used to the extent practical to prevent loss of the protection function.

Compliance

Design of Protection Systems includes consideration of natural phenomena, normal maintenance, testing and accident conditions such that the protection functions are always available.

Sufficient redundancy and independence are designed into the Protection System to assure that no single failure, or removal from service, of any component or channel of a system results in the loss of the protection function. The minimum redundancy is exceeded in each protection function which is active with the reactor at power. Functional diversity and consequential location diversity are designed into the system. The protective systems are discussed in detail in subsections 7.2 and 7.3.

Criterion 23 - Protection System Failure Modes.

The Protection System shall be designed to fail into a safe state or into a state demonstrated to be acceptable on some other defined basis if conditions such as disconnection of the system, loss of energy (e.g., electric power, instrument air), or postulated adverse environments (e.g., extreme heat or cold, fire, pressure, steam, water, and radiation) are experienced.

Compliance

The Protection System is designed with due consideration of the most probable failure modes of the components under various perturbations of the environment and energy sources. Each reactor trip channel is designed on the de-energize-to-trip principle so loss of power, disconnection, open channel faults, and the majority of internal channel short-circuit faults cause the channel to go into its tripped mode. The Protection System is discussed in subsections 7.2 and 7.3.

Criterion 24 - Separation of Protection and Control Systems.

The Protection System shall be separated from control systems to the extent that failure of any single control system component or channel, or failure or removal from service of any single protection system component or channel which is common to the control and protection systems leaves intact a system satisfying all reliability, redundancy, and independence requirements of the Protection System. Interconnection of the protection and control systems shall be limited so as to assure that safety is not significantly impaired.

Compliance

The Protection System is separate and distinct from Control Systems. Control Systems may be dependent on the Protection System in that control signals are derived from Protection System measurements where applicable. These signals are transferred to the Control System by isolation devices which are classified as protection components. The adequacy of system isolation has been verified by testing under conditions of postulated credible faults. The failure or removal of any signal control instrumentation and protection circuitry leaves intact a system which satisfies the requirements of the Protection System. Protection Systems are discussed in subsections 7.2 and 7.3. Control Systems are discussed in subsections 7.4, 7.5, and 7.7.

Criterion 25 - Protection System Requirements for Reactivity Control Malfunctions

The Protection System shall be designed to assure that specified acceptable fuel design limits are not exceeded for any single malfunction of the Reactivity Control Systems, such as accidental withdrawal (not ejection or dropout) of control rods.

Compliance

Reactor shutdown by full-length rod insertion is completely independent of the normal control function since the trip breakers interrupt power to the rod mechanisms regardless of existing control signals. The Protection System is designed to limit reactivity transients so that fuel design limits are not exceeded.

The analysis presented in Chapter 15 shows that for postulated dilution during refueling, startup or manual or automatic operation at power, the operator has ample time to determine the cause of dilution, terminate the source of dilution and initiate reboration before the shutdown margin is lost. The Rod Control System is discussed in subsections 4.2 and 7.7. The CVCS Makeup System is discussed in subsection 9.3.4. Analyses of the effects of possible malfunctions are discussed in Chapter 15. The analyses show that acceptable fuel damage limits are not exceeded even in the event of a single malfunction of either system.

Criterion 26 - Reactivity Control System Redundancy and Capability.

Two independent reactivity control systems of different design principles shall be provided. One of the systems shall use control rods, preferably including a positive means for inserting the rods, and shall be capable of reliably controlling reactivity changes to assure that under conditions of normal operation, including anticipated operational occurrences, and with appropriate margin for malfunctions such as stuck rods, specified acceptable fuel design limits are not exceeded. The second reactivity control system shall be capable of reliably controlling the rate of reactivity changes resulting from planned, normal power changes (including xenon burnout) to assure acceptable fuel design limits are not exceeded. One of the systems shall be capable of holding the reactor core subcritical under cold conditions.

Compliance

Two Reactivity Control Systems are provided. These are rod cluster control assemblies (RCCA) and chemical shim (boration). The RCCA are inserted into the core by the force of gravity.

During operation the shutdown rod banks are fully withdrawn. The full-length Control Rod System maintains a programmed average reactor temperature compensating for reactivity effects associated with scheduled and transient load changes. The shutdown rod banks along with the full-length control banks are designed to shut down the reactor with adequate margin under conditions of normal operation and anticipated operational occurrences thereby ensuring that specified fuel design limits are not exceeded. The most restrictive period in core life is assumed in all analyses and the most reactive rod cluster is assumed to stick in out of core position.

The boron chemical shim will maintain the reactor in the cold shutdown state independent of the position of the control rods and can compensate for all xenon burnout transients.

Details of the construction of the RCCA are included in subsection 4.2, with the operation discussed in subsection 7.7. The means of controlling the boric acid concentration is described in subsection 9.3. Performance analyses under accident conditions are included in Chapter 15.

Criterion 27 - Combined Reactivity Control Systems Capability.

The Reactivity Control Systems shall be designed to have a combined capability, in conjunction with poison addition by the Emergency Core Cooling System (ECCS), of reliably controlling reactivity changes to assure that under postulated accident conditions and with appropriate margin for stuck rods the capability to cool the core is maintained.

Compliance

Sufficient capability is provided to control reactivity for any anticipated cooldown transient, i.e., accidental opening of a steam bypass or relief valve or safety valve stuck open. This capability is achieved by a combination of RCCA and automatic boron addition via the ECCS with the most reactive control rod assumed to be fully withdrawn. Manually controlled boric acid addition is used to supplement the RCCA in maintaining the shutdown margin for the long-term conditions of xenon decay and plant cooldown.

Criterion 28 - Reactivity Limits.

The Reactivity Control Systems shall be designed with appropriate limits on the potential amount and rate of reactivity increase to assure that the effects of postulated reactivity accidents can neither (1) result in damage to the reactor coolant pressure boundary greater than limited local yielding nor (2) sufficiently disturb the core, its support structures or other reactor pressure vessel internals to impair significantly the capability to cool the core. These postulated reactivity accidents shall include consideration of rod ejection (unless prevented by positive means), rod dropout, steam line rupture, changes in reactor coolant temperature and pressure, and cold water addition.

Compliance

The maximum reactivity worth the control rods and the maximum rates of reactivity insertion employing control rods and boron removal are limited to values that prevent rupture of the RC System boundary or disruptions of the core or vessel internals to a degree that could impair the effectiveness of emergency core cooling.

The appropriate reactivity insertion rate for the withdrawal of RCCA and the dilution of the boric acid in the RC Systems are controlled by the Technical Specifications for the facility. The specification includes or references appropriate graphs that show the permissible mutual withdrawal limits and overlap of functions of the several RCCA banks as a function of power. These data on reactivity insertion rates, dilution and withdrawal limits are also discussed in subsection 4.3. The capability of the Chemical and Volume Control System to avoid an inadvertent excessive rate of boron dilution is discussed in Chapter 9. The relationship of the reactivity insertion rates to plant safety is discussed in Chapter 15.

Assurance of core cooling capability following accidents, such as rod ejection, steam line break, etc., is given by keeping the reactor coolant pressure boundary stresses within faulted condition limits as specified by applicable ASME codes. Structural deformations are checked also and limited to values that do not jeopardize the operation of needed safety features.

Criterion 29 - Protection Against Anticipated Operational Occurrences.

The Protection and Reactivity Control Systems shall be designed to assure an extremely high probability of accomplishing their safety functions in the event of anticipated operational occurrences.

Compliance

The Protection and Reactivity Control Systems are designed to ensure an extremely high probability of fulfilling their intended functions. The design principles of diversity and redundancy coupled with a rigorous Quality Assurance Program and analyses support this probability as does operating experience in plants using the same basic design. Subsections 4.2.3, 7.2, and 7.7 describe design bases and system design.

Criterion 30 - Quality of Reactor Coolant Pressure Boundary.

Components which are part of the reactor coolant pressure boundary shall be designed, fabricated, erected, and tested to the highest quality standards practical. Means shall be

provided for detecting and, to the extent practical, identifying the location of the source of reactor coolant leakage.

Compliance

All RC System components are designed, fabricated, inspected, and tested in conformance with Tables 3.2.2-1 and 3.2.2-2.

Detecting and locating, to the extent practical, leakage from the RCS pressure boundary is provided by diverse systems. Subsection 5.2.7 describes the reactor coolant pressure boundary leakage detection system.

Criterion 31 - Fracture Prevention of Reactor Coolant Pressure Boundary.

The reactor coolant pressure boundary shall be designed with sufficient margin to assure that when stressed under operating, maintenance, testing, and postulated accident conditions (1) the boundary behaves in a nonbrittle manner and (2) the probability of rapidly propagating fracture is minimized. The design shall reflect consideration of service temperatures and other conditions of the boundary material under operating, maintenance, testing, and postulated accident conditions and the uncertainties in determining (1) material properties, (2) the effects of irradiation on material properties, (3) residual, steady-state and transient stresses, and (4) size of flaws.

Compliance

Close control is maintained over material selection and fabrication for the RC System to assure that the boundary behaves in a nonbrittle manner. The RC System materials which are exposed to the coolant are corrosion resistant stainless steel or Inconel. The reference temperature RT_{NDT} of the reactor vessel material samples is established by Charpy V-Notch and dropweight tests. These tests also ensure that materials with proper toughness properties and margins are used.

As part of the reactor vessel specification certain requirements which are not specified by the applicable ASME codes are performed, as follows:

1. A complete independent review of the supplier stress analysis, Stress Report 30616-1130 Revision 1, Parts 1 and 2, has been conducted by Westinghouse on the reactor vessel. Independent stress analysis was conducted in selected areas to ascertain that the design conditions imposed by the Westinghouse specification have been adequately accounted for.

2. The reactor vessel receives a complete stress analysis, including analysis for cyclic pressure and temperature operation. The ASME Nuclear Power Plant Component Code, Section III, Class 1 rules to which these components are designed generally exempt them from cyclic analysis by code Paragraph NB-3222.4(d).

3. Reactor Vessel Out-of-Roundness Requirements - To ensure uniform coolant flow, the Westinghouse out-of-roundness requirements on the cylindrical region in the area of the thermal shield are above code. ASME Code, Section III, Class 1 out-of-roundness requirements are stated in Paragraph NB-4221.1 of the Code. This referenced paragraph

states that the difference in inches between the maximum and minimum inside diameters at any cross section shall not exceed the smaller of (D + 50)/200 and D/100, where D is the nominal inside diameter in inches at the cross section under consideration. Westinghouse requires the out-of-roundness to be less than 0.5 percent of the diameter in the cylindrical section of the vessel in the region of the thermal shield.

Special requirements are imposed by Westinghouse on the quality control procedure for both the basic materials of construction, and on various subassemblies and final assembly for the reactor coolant loop components. These requirements supplement the rules for quality assurance spelled out in the applicable design codes. Examples of the special quality assurance requirements for the reactor vessel that are beyond code requirements are contained in Section 5.4.4.

The fabrication and quality control techniques used in the fabrication of the RC System are equivalent to those for the reactor vessel. The inspections of reactor coolant pressure boundary are governed by requirements of Section 5.2.8.

The permissible pressure - temperature relationships for selected heatup and cooldown rates are calculated in accordance with the ASME Code as described in Section 5.2.4.3. The change in RT_{NDT} due to irradiation during plant life is calculated using conservative methods and verified periodically by surveillance program irradiated material test data.

Criterion 32 - Inspection of Reactor Coolant Pressure Boundary.

Components which are part of the reactor coolant pressure boundary shall be designed to permit (1) periodic examination and testing of important areas and features to assess their structural and leak-tight integrity, and (2) an appropriate material surveillance program for the reactor pressure vessel.

Compliance

The design of the reactor coolant pressure boundary provides the capability for accessibility during service life to the entire internal surface of the reactor vessel, certain external zones of the vessel including the nozzle to reactor coolant piping welds and the top and bottom heads, and external surfaces of the reactor coolant piping except for the area of pipe within the primary shielding concrete. The examination capability complements the Leakage Detection Systems in assessing the pressure boundary component's integrity. The reactor coolant pressure boundary is periodically inspected under the provisions of ASME B&PV Code, Section XI. Inservice Inspection is discussed in subsection 5.2.8.

Monitoring of the RT_{NDT} properties of the reactor vessel core region forgings, weldments and associated heat treated zones are performed in accordance with ASTM E 185, Recommended Practice for Surveillance Testing on Structural Materials in Nuclear Reactors. Samples of reactor vessel plate materials are retained and catalogued in case future engineering development shows the need for further testing.

The material properties surveillance program includes not only the conventional tensile and impact tests, but also fracture mechanics specimens. The observed shifts in RT_{NDT} of the core region materials with irradiation will be used to confirm the calculated limits to startup and shutdown transients.

To define permissible operating conditions below RT_{NDT}, a pressure range is established which is bounded by a lower limit for pump operation and an upper limit which satisfies reactor vessel stress criteria. To allow for thermal stresses during heatup or cooldown of the reactor vessel, an equivalent pressure limit is defined to compensate for thermal stress as a function of rate of change of coolant temperature. Since the normal operating temperature of the reactor vessel is well above the maximum expected RT_{NDT} brittle fracture during normal operation is not considered to be a credible mode of failure. Additional details can be found in subsection 5.2.

Criterion 33 - Reactor Coolant Makeup.

A system to supply reactor coolant makeup for protection against small breaks in the reactor coolant pressure boundary shall be provided. The system safety function shall be to assure that specified acceptable fuel design limits are not exceeded as a result of reactor coolant loss due to leakage from the reactor coolant pressure boundary and rupture of small piping or other small components which are part of the boundary. The system shall be designed to assure that for onsite electric power system operation (assuming offsite power is not available) and for offsite power electric power system operation (assuming onsite power is not available) the system safety function can be accomplished using the piping, pumps, and valves used to maintain coolant inventory during normal reactor operation.

Compliance

The Chemical and Volume Control System includes charging pumps and multiple makeup paths that serve the safety function of maintaining reactor coolant inventory during normal operations and in the event of small reactor coolant leakages. The charging pumps can maintain reactor coolant pressure sufficiently high to allow orderly reactor shutdown for small tubing or pipe breaks. Chapter 5 discusses the RC System, subsection 9.3.4 discusses the Chemical and Volume Control system and Chapter 15 analyzes charging pump performance and fuel damage in event of postulated accidents.

Criterion 34 - Residual Heat Removal.

A system to remove residual heat shall be provided. The system safety function shall be to transfer fission product decay heat and other residual heat from the reactor core at a rate such that specified acceptable fuel design limits and the design limits and the design conditions of the reactor coolant pressure boundary are not exceeded.

Suitable redundancy in components and features, and suitable interconnections, leak detection, and isolation capabilities shall be provided to assure that for onsite electric power system operation (assuming offsite power is not available) and for offsite electric power system operation (assuming onsite power is not available) the system safety function can be accomplished, assuming a single failure.

Compliance

The Residual Heat Removal (RHR) and Auxiliary Feedwater (AFW) Systems are provided to remove the reactor core residual heat. The RHR and AFW Systems include redundant trains with sufficient heat removal capability. The systems are provided electric power by onsite and offsite supplies. The systems accommodate the single-failure criterion.

The RHR and AFW Systems are described in subsections 5.5.7 and 10.4.7, respectively.

Criterion 35 - Emergency Core Cooling.

A system to provide abundant emergency core cooling shall be provided. The system safety function shall be to transfer heat from the reactor core following any loss of reactor coolant at a rate such that (1) fuel and clad damage that could interfere with continued effective core cooling is prevented and (2) clad metal-water reaction is limited to negligible amounts.

Suitable redundancy in components and features, and suitable interconnections, leak detection, isolation, and containment capabilities shall be provided to assure that for onsite electric power system operation (assuming offsite power is not available) and for offsite electric power system operation (assuming onsite power is not available) the system safety function can be accomplished, assuming a single failure.

Compliance

The ECCS design and safety analysis is in accordance with the NRC's (AEC) Interim Acceptance Criterion for Emergency Core Cooling System for Light-Water Power Reactors of June 1971.

By combining the use of passive accumulators, centrifugal charging pumps, safety injection pumps and residual heat removal pumps, emergency core cooling is provided even if there should be a failure of any component in any system. The ECCS employs a passive system of accumulators which do not require any external signals or source of power for their operation to cope with the short-term cooling requirements of large reactor coolant pipe breaks. Two independent and redundant pumping systems are provided for smaller break protection and to cool the core after the accumulators have discharged following a large break. These systems are arranged so that the single failure of any active component does not prevent meeting the short-term cooling requirements.

The primary function of the ECCS is to deliver borated cooling water to the reactor core in the event of a LOCA. This limits the fuel-clad temperature and thereby ensures that the core will remain intact and in place and fuel damage will not exceed that stipulated as a basis in the safety analysis (Chapter 15). This protection is afforded for:

1. All pipe break sizes up to and including the hypothetical circumferential rupture of a reactor coolant loop.

2. A loss of coolant associated with a rod ejection accident.

The ECCS is described in subsection 6.3. The LOCA, including an evaluation of consequences, is discussed in Chapter 15.

Criterion 36 - Examination of Emergency Core Cooling System.

The ECCS shall be designed to permit appropriate periodic examination of important components, such as spray rings in the reactor pressure vessel, water injection nozzles, and piping, to assure the integrity and capability of the system.

Compliance

Design provisions facilitate access to the critical parts of the reactor vessel internals, injection nozzles, pipes and valves for nondestructive examination.

The majority of components outside the containment are accessible for leaktightness inspection during operation of the reactor.

Details of the examination for the reactor vessel internals are included in subsection 5.4. Inspection of the ECCS is discussed in subsection 6.3. Inservice Inspection is discussed in subsection 5.2.8.

Criterion 37 - Testing of Emergency Core Cooling System.

The ECCS shall be designed to permit appropriate periodic pressure and functional testing to assure (1) the structural and leaktight integrity of its components, (2) the operability and performance of the system as a whole and under conditions as close to design as practical, the performance of the full operational sequence that brings the system into operation, including operation of applicable portions of the Protection System, the transfer between normal and emergency power sources, and the operation of the Associated Cooling Water System.

Compliance

The design provides for periodic inspection/testing of both active and passive components of the ECCS.

Proof tests of the components are performed in the manufacturer's shop. Preoperational system hydrostatic and performance tests demonstrate structural and leaktight integrity of components and proper functioning of the system. Thereafter, periodic tests demonstrate that components are functioning properly.

An active component of the ECCS may be individually actuated on the normal power source during plant operation to demonstrate operability when actuation does not interfere with plant operation. Components are actuated on the emergency power source during preoperational tests and subsequently during plant shutdown per technical specifications.

The design provides for capability to test initially, to the extent practical, the full operational sequence up to the design conditions including transfer to emergency power sources to demonstrate the readiness and capability of the system.

Details of the ECCS are found in subsection 6.3. Performance under accident conditions is evaluated in Chapter 15. Periodic testing is discussed in subsection 6.3.4. Inservice Inspection is discussed in subsection 5.2.8.

Criterion 38 - Containment Heat Removal.

A system to remove heat from the reactor containment shall be provided. The system safety function shall be to reduce rapidly, consistent with the functioning of other associated systems, the containment pressure and temperature following any LOCA and maintain them at acceptably low levels.

Suitable redundancy in components and features, and suitable interconnections, leak detection, isolation, and containment capabilitites shall be provided to assure that for onsite electric power system operation (assuming offsite power is not available) and for offsite electric power system operation (assuming onsite power is not available) the system safety function can be accomplished, assuming a single failure.

Compliance

Systems are provided to effect postaccident containment heat removal. The systems are classified as Engineered Safety Features (ESF) and as such incorporate a large degree of diversity and redundancy as well as being provided with multiple power supplies.

Containment heat removal is provided by the ice condenser and containment spray. The ice condenser is a passive system consisting of energy absorbing ice on which steam is condensed during and immediately after a LOCA. The condensation of steam on the ice limits the pressure and temperature to values less than containment design.

The Air Return System is used to circulate air and steam through the upper compartment, lower compartment, and ice condenser after the initial blowdown. This maintains proper mixing of the containment air and steam with the heat removal media, spray and ice, for the necessary heat removal.

The Containment Spray (CS) System sprays water into the upper compartment containment atmosphere in the event of a LOCA, thereby removing containment heat. The recirculation mode allows for long-term heat removal by means of two spray systems, each of which contains redundant spray headers. The CS System consists of two completely separate trains consisting of pumps, heat exchangers, valves, and headers. The CS System is initiated automatically upon containment high-high pressure and is manually aligned for operation in the recirculation mode. The Residual Heat Removal (RHR) System contains two spray headers which are supplied from separate trains of the RHR System by manual diversion of a portion of the low-pressure Safety Injection System flow during recirculation mode.

The loss of a single active component was assumed in the design of these systems. Emergency Power System arrangements assure the proper function of the Air Return Fan System and the CS System and the RHR System sprays upon loss of offsite power.

The ESF Systems are discussed in Chapter 6; the Electric Power Systems in Chapter 8; and the Protection Systems in Chapter 7.

Criterion 39 - Inspection of Containment Heat Removal System.

The Containment Heat Removal System shall be designed to permit appropriate periodic inspection of important components, such as the torus, pumps, spray nozzles, and piping to assure the integrity and capability of the system.

Compliance

The ice condenser design includes provisions for visual inspections of the ice bed flow channels, doors, and cooling equipment. The Air Return Fan System provides for visual inspection of the

fans and the associated backflow dampers and for duct systems that are not embedded in concrete. The CS System and the RHR System sprays are designed such that active and passive components can be readily inspected to demonstrate system readiness. Pressure contained systems can be inspected for leaks from pump seals, valve packing, flange joints, and relief valves. The piping systems are inspected as required by the inservice inspection program.

System design details are given in Chapter 6.

Criterion 40 - Testing of Containment Heat Removal System.

The Containment Heat Removal System shall be designed to permit appropriate periodic pressure and functional testing to assure (1) the structural and leaktight integrity of its components, (2) the operability and performance of the active components of the system, and (3) the operability of the system as a whole, and, under conditions as close to the design as practical, the performance of the full operational sequence that brings the system into operation of applicable portions of the protection system, the transfer between normal and emergency power sources, and the operation of the associated cooling water system.

Compliance

The Containment Heat Removal Systems described in Chapter 6 are designed to permit periodic testing so that proper operation can be assured. In some cases whole systems can be operated for test purposes. In others, individual components are operated for functional tests so that plant operations are not disrupted.

The ice condenser contains no active components required to function during an accident condition. Samples of the ice are taken periodically and tested for boron concentration. The lower inlet door opening force is periodically measured. The position of the lower inlet doors is monitored at all times. Top deck door and intermediate deck doors are tested for operability.

Active components of the CS System and the RHR System are tested in place after installation. These spray systems receive initial flow tests to assure proper dynamic functioning. Further testing of the active components is conducted after component maintenance. Air test lines are provided to assure that spray nozzles are not obstructed. Testing of transfer between normal and emergency power supplies is also conducted. Air return fans and their associated backflow dampers are tested for operability in accordance with the Technical Specifications.

Criterion 41 - Containment Atmosphere Cleanup.

Systems to control fission products, hydrogen, oxygen, and other substances which may be released into the reactor containment shall be provided as necessary to reduce, consistent with the functioning of other associated systems, the concentration and quality of fission products released to the environment following postulated accidents, and to control the concentration of hydrogen or oxygen and other substances in the containment atmosphere following postulated accidents to assure that containment integrity is maintained.

Each system shall have suitable redundancy in components and features, and suitable interconnections, leak detection, isolation, and containment capabilities to assure that for onsite

electric power system operation (assuming offsite power is not available) and for offsite electric power system operation (assuming onsite power is not available) its safety function can be accomplished, assuming a single failure.

Compliance

The Shield Building, surrounding the primary containment, serves as a secondary containment. The Emergency Gas Treatment (EGT) System (subsection 6.2) maintains this secondary containment at a negative pressure during the postaccident period. The EGT System also collects and processes the secondary containment atmosphere. After processing, the portion of this processed air necessary to assure a negative pressure is exhausted through the plant vent. The remainder is recirculated and distributed in the secondary containment.

The Auxiliary Building also serves as a secondary containment to collect containment leakage and equipment leakage during the recirculation of containment sump water. The Auxiliary Building General Ventilation System (subsection 9.4.2) is isolated by an Auxiliary Building Isolation signal. The Auxiliary Building Gas Treatment System (subsection 9.4.2) then maintains the building at a negative pressure and processes any in-leakage prior to release to the environment.

Distribution of the atmosphere within the containment is provided by the Air Return Fan System (subsection 6.6). The system also takes a suction in each compartment to prevent stagnation and excessive accumulation of hydrogen.

Criterion 42 - Inspection of Containment Atmosphere Cleanup Systems.

The Containment Atmosphere Cleanup Systems shall be designed to permit appropriate periodic inspection of important components, such as filter frames, ducts, and piping to assure the integrity and capability of the systems.

Compliance

The EGT System (subsection 6.2) filtration train and fans are located in the Auxiliary Building and are designed to facilitate inspections. The dampers that control recirculation and exhaust of the EGT System effluent are located inside the Shield Building annulus and is accessible for inspection.

The entire Auxiliary Building Gas Treatment System (subsection 9.4.2) is located in the Auxiliary Building and is designed to facilitate inspection. The electric hydrogen recombiners (subsection 6.2) are located inside the upper containment and are accessible for inspection.

Criterion 43 - Testing of Containment Atmosphere Cleanup Systems.

The Containment Atmosphere Cleanup Systems shall be designed to permit appropriate periodic pressure and functional testing to assure (1) the structural and leaktight integrity of its components, (2) the operability and performance of the active components of the systems such as fans, filters, dampers, pumps, and valves, and (3) the operability of the systems as a whole and, under conditions as close to design as practical, the performance of the full operational

sequence that brings the systems into operation, including operation of applicable portions of the protection systems, the transfer between normal and emergency power sources, and the operation of associated systems.

Compliance

The EGT System (subsection 6.2) is designed to permit testing to assure pressure and leaktightness of the filtration trains; functional testing to assure operability of the fans, dampers, and instrumentation; and performance testing to assure overall operability of the system and to demonstrate the proper alignment of the system to the accident unit.

The Auxiliary Building Gas Treatment System (subsection 9.4.2) is designed to allow testing to assure the pressure and leaktightness of the filtration trains; to assure the operability of the fans and dampers; and to assure the operability of the system as a whole. The system design permits testing of the actuation signals, the isolation of the normal ventilation system, and the proper alignment of dampers.

Criterion 44 - Cooling Water.

A system to transfer heat from structures, systems, and components important to safety, to an ultimate heat sink shall be provided. The system safety function shall be to transfer the combined heat load of these structures, systems, and components under normal operating and accident conditions.

Suitable redundancy in components and features, and suitable interconnections, leak detection, and isolation capabilities shall be provided to assure that for onsite electric power system operation (assuming offsite power is not available) and for offsite electric power system operation (assuming onsite power is not available) the system safety function can be accomplished, assuming a single failure.

Compliance

A Seismic Category I Component Cooling System (CCS) (subsection 9.2) is provided to transfer heat from the RC System, and selected reactor support equipment to a Seismic Category I Essential Raw Cooling Water (ERCW) System (subsection 9.2). The containment spray system heat exchangers are cooled directly by ERCW.

The CCS consists of two independent engineered safety subsystems, each of which is capable of serving all necessary loads under normal or accident conditions, powered by either offsite sources or onsite emergency power sources.

In addition to serving as the heat sink for the CCS, the ERCW System is also used as heat sink for the containment and engineered safety equipment through use of compartment and space

coolers and selected seal jackets on ESF pumps. The ERCW System consists of two independent loops, each of which is capable of providing all necessary heat sink requirements. The ERCW System transfers heat to the ultimate heat sink (subsection 9.2) and is powered by either offsite sources or onsite emergency power sources.

Criterion 45 - Inspection of Cooling Water System.

The Cooling Water System shall be designed to permit appropriate periodic inspection of important components, such as heat exchangers and piping, to assure the integrity and capability of the system.

Compliance

The Component Cooling Water System (subsection 9.2) and ERCW System (subsection 9.2) components can be visually inspected on a periodic basis. Those components that cannot be inspected with the unit in operation can be inspected during shutdown.

The CCS and ERCW pumps are arranged such that any pump may be isolated for inspection and maintenance.

Criterion 46 - Testing of Cooling Water System.

The Cooling Water System shall be designed to permit appropriate periodic pressure and functional testing to assure (1) the structural and leaktight integrity of its components, (2) the operability and the performance of the active components of the system, and (3) the operability of the system as a whole and under conditions as close to design as practical, the performance of the full operational sequence that brings the system into operation for reactor shutdown and for LOCA, including operation of applicable portions of the protection system and the transfer between normal and emergency power sources.

Compliance

The CCS & ERCW Systems are normally pressurized during plant operations. The systems/ components are subject to tests per the ASME Section XI ISI/IST programs The emergency functions of the systems are periodically tested out to the final actuated device.

For additional details refer to Electric Power (Chapter 8), Component Cooling Water (subsection 9.2), ERCW (subsection 9.2), and Instrumentation and Controls (Chapter 7).

Criterion 50 - Containment Design Basis.

The reactor containment structure, including access openings, penetrations, and the Containment Heat Removal System shall be designed so that the containment structure and its internal compartments can accommodate, without exceeding the design leakage rate and, with sufficient margin, the calculated pressure and temperature conditions resulting from any LOCA. This margin shall reflect consideration of (1) the effects of potential energy sources which have not been included in the determination of the peak conditions, such as energy in steam generators and energy from metal-water and other chemical reactions that may result from degraded

emergency core cooling functioning, (2) the limited experience and experimental data available for defining accident phenomena and containment responses, and (3) the conservatism of the calculational model and input parameters.

Compliance

The containment structure, including access openings and penetrations, is designed with sufficient conservatism to accommodate, without exceeding the design leakage rate, the transient peak pressure and temperature associated with a postulated reactor coolant piping break up to and including a double-ended rupture of the largest reactor coolant pipe.

The containment design consists of a freestanding steel containment vessel and a separate outer reinforced concrete reactor building. The ice condenser concept is used for energy absorption during a LOCA. The annular space between the containment vessel and the reactor building forms a double barrier to fission products and is maintained at less than atmospheric pressure. The ice condenser, which is located inside the steel containment and consists of a suitable quantity of borated ice in a cold storage compartment, provides rapid energy absorption to maintain the containment vessel design pressure at a low level and to reduce the peak duration, thus reducing the potential for escape of fission products from the primary containment vessel.

The functional design of the containment is based upon the following assumptions and conditions:

1. A design basis blowdown energy and mass release.

2. Secondary energy released by safety injection.

3. Carryover energy from zirconium-water reaction.

4. A decay heat from the reactor at rated power.

5. The single failure criterion is accommodated.

The internal pressure used for design of the containment is greater than the peak pressure occurring as the result of the complete blowdown of the reactor coolant through any rupture of the RC System up and including the hypothetical double-ended severance of the largest reactor coolant pipe. This pressure is not exceeded during any subsequent long-term pressure transient.

Refer to subsection 6.2 for further design details.

Criterion 51 - Fracture Prevention of Containment Pressure Boundary.

The reactor containment pressure boundary shall be designed with sufficient margin to assure that under operating, maintenance, testing, and postulated accident conditions (1) its ferritic materials behave in a nonbrittle manner and (2) the probability of rapidly propagating fracture is minimized. The design shall reflect consideration of service temperatures and other conditions of the containment boundary material during operation, maintenance, testing, and postulated accident conditions, and the uncertainties in determining (1) material properties, (2) residual, steady state, and transient stresses, and (3) size of flaws.

Compliance

The containment vessel and its penetration sleeves meet the material, design, and technical process requirements of ASME Boiler and Pressure Vessel Code, Section III, Class B. Charpy V-notch impact tests were made of the containment vessel material (ASTM A 516, Grade 60) 5/8 inch and greater, weld deposit, and the base metal weld heat effected zone employing a test temperature at least 30°F below minimum service temperature in accordance with ASME Code, Paragraph N-330. This test determines whether the material properties are above the ductile to brittle transition temperature with allowable values for energy absorption given in Tables N-421 and N-422. It is the basis to ensure that the material used will not behave in a brittle manner and that rapidly propagating fracture is minimized.

The containment boundary design considered uncertainties in material properties, residual, steady-state and transient stresses, and material flaws along with conservative allowable stress levels for all stressed elements of the containment boundary. All material was examined for flaws that would adversely affect the performance of the material in its intended purpose. See subsection 6.2, Containment Functional Design, for further details.

Criterion 52 - Capability for Containment Leakage Rate Testing.

The reactor containment and other equipment which may be subjected to containment test conditions shall be designed so that periodic integrated leakage rate testing can be conducted at containment design pressure.

Compliance

The reactor containment design permits overpressure strength testing during construction and permits preoperational integrated leakage rate testing at containment design pressure and at reduced pressure, in accordance to Appendix J, 10 CFR 50. The reactor containment and other equipment which may be subjected to containment test conditions are designed so that periodic integrated leakage rate testing can be conducted at containment design pressure. All equipment which may be subjected to the test pressure will either be vented to the containment, be removed from the containment during the test, or be designed to withstand the containment design pressure without damage.

The preoperational integrated leak tests at peak pressure and at reduced pressure verify that the containment, including the isolation valves and the resilient penetration seals, leaks less than the allowable value of 0.25 weight percent per day at peak pressure.

Details concerning the conduct of periodic integrated leakage rate tests are in subsection 6.2.1.4.

Criterion 53 - Provisions for Containment Testing and Inspection.

The reactor containment shall be designed to permit (1) appropriate periodic inspection of all important areas, such as penetrations, (2) an appropriate surveillance program, and (3) periodic testing at containment design pressure of the leaktightness of penetrations which have resilient seals and expansion bellows.

Compliance

The reactor containment and the Containment Isolation (CI) System (subsection 6.2) are designed so that:

1. Integrated leak tests can be run during plant lifetime (see compliance to Criterion 52).

2. Visual inspections can be made of all important areas, such as penetrations.

3. An appropriate surveillance program can be maintained (see subsection 6.2).

4. Periodic testing at containment design pressure of the leaktightness of isolation valves and penetrations which have resilient seals and expansion bellows is possible. In testing locally the resilient seals and expansion bellows leakages, the guidelines for Type B tests in Appendix J of 10 CFR 50 will be followed.

5. The operability of the CI System can be demonstrated periodically.

Criterion 54 - Piping Systems Penetrating Containment.

Piping systems penetrating primary reactor containment shall be provided with leak detection, isolation, and containment capabilities having redundance, reliability, and performance capabilities which reflect the importance to safety of isolating these piping systems. Such piping systems shall be designed with a capability to test periodically the operability of the isolation valves and associated apparatus and to determine if valve leakage is within acceptable limits.

Compliance

Containment isolation features are classified as Seismic Category I. These components require quality assurance measures which enhance reliability. The containment isolation design provides for a double barrier at the containment penetration in those fluid systems that are not required to function following a DBE.

All piping systems penetrating the containment, insofar as practical, have been provided with test vents and test connections or have other provisions to allow periodic leak testing as required. See subsection 6.2.4 for containment isolation details.

Criterion 55 - Reactor Coolant Pressure Boundary Penetrating Containment.

Each line that is part of the reactor coolant pressure boundary and that penetrates primary reactor containment shall be provided with containment isolation valves as follows, unless it can be demonstrated that the containment isolation provisions for a specific class of lines, such as instrument lines, are acceptable on some other defined basis:

1. One locked closed isolation valve inside and one locked closed isolation valve outside containment; or

2. One automatic isolation valve inside and one locked closed isolation valve outside containment; or

3. One locked closed isolation valve inside and one automatic isolation valve outside containment. A simple check valve may not be used as the automatic isolation valve outside containment; or

4. One automatic isolation valve inside and one automatic isolation valve outside containment. A simple check valve may not be used as the automatic isolation valve outside containment.

Isolation valves outside containment shall be located as close to containment as practical and upon loss of actuating power, automatic isolation valves shall be designed to take the position that provides greater safety.

Other appropriate requirements to minimize the probability or consequences of accidental rupture of these lines or of lines connected to them shall be provided as necessary to assure adequate safety. Determination of the appropriateness of these requirements, such as higher quality in design, fabrication, and testing, additional provisions for inservice inspection, protection against more severe natural phenomena, and additional isolation valves and containment, shall include consideration of the population density, use characteristics, and physical characteristics of the site environs.

Compliance

The reactor coolant pressure boundary (RCPB) is located entirely within the containment structure. Sampling lines are provided with remotely operated valves for isolation in the event of a failure. With the exception of the post accident sampling system (PASS) valves, these valves also close automatically on a containment isolation signal. RCS PASS valves are normally closed and require a control room permit signal to enable manipulation of these valves. Instrumentation lines that connect to the RCPB are provided with sealed systems if they penetrate containment. Other systems that connect to the RCPB are provided with appropriate isolation valves and/or flow restrictors prior to penetrating primary containment or with the appropriate combination of locked/automatic valves.

Additional information on lines penetrating primary containment can be found in subsection 6.2.4.

Criterion 56 - Primary Containment Isolation.

Each line that connects directly to the containment atmosphere and penetrates primary reactor containment shall be provided with containment isolation valves as follows, unless it can be demonstrated that the containment isolation provisions for a specific class of lines, such as instrument lines, are acceptable on some other defined basis:

1. One locked closed isolation valve inside and one locked closed isolation valve outside containment; or

2. One automatic isolation valve inside and one locked closed isolation valve outside containment; or

3. One locked closed isolation valve inside and one automatic isolation valve outside containment. A simple check valve may not be used as the automatic isolation valve outside containment; or

4. One automatic isolation valve inside and one automatic isolation valve outside containment. A simple check valve may not be used as the automatic isolation valve outside containment.

Isolation valves outside containment shall be located as close to the containment as practical and upon loss of actuating power, automatic isolation valves shall be designed to take the position that provides greater safety.

Compliance

At least two barriers are provided in penetrations that connect directly to the containment atmosphere or closed systems which are assumed vulnerable to accident forces unless an approved exception has been granted.

Refer to subsection 6.2.4 for information on exceptions and additional details.

Criterion 57 - Closed System Isolation Valves.

Each line that penetrates primary reactor containment and is neither part of the reactor coolant pressure boundary nor connected directly to the containment atmosphere shall have at least one containment isolation valve which shall be either automatic, or locked closed, or capable of remote manual operation. This valve shall be outside containment and located as close to the containment as practical. A simple check valve may not be used as the automatic isolation valve.

Compliance

Those lines that penetrate the containment, do not communicate with either the reactor coolant pressure boundary or the containment atmosphere, and are not affected by LOCA forces are defined as closed systems. All lines penetrating the containment are designed to meet NRC General Design Criterion 57, Closed System Isolation Valves, with approved exceptions. Refer to subsection 6.2.4 for additional information and exceptions.

Criterion 60 - Control of Releases of Radioactive Materials to the Environment.

The nuclear power unit design shall include means to control suitably the release of radioactive materials in gaseous and liquid effluents and to handle radioactive solid wastes produced during normal reactor operation, including anticipated operational occurrences. Sufficient holdup capacity shall be provided for retention of gaseous and liquid effluents containing radioactive materials, particularly where unfavorable site environmental conditions can be expected to impose unusual operational limitations upon the release of such effluents to the environment.

Compliance

Liquid, gaseous, and solid radioactive waste processing equipment is provided. The principles of filtration, demineralization, evaporation, solidification, storage for decay and sampling are utilized as described in subsections 11.2, 11.3, and 11.5. Process monitoring is provided to control this equipment and regulate releases to the environment as described in subsection 11.4.

Criterion 61 - Fuel Storage and Handling and Radioactivity Control.

The fuel storage and handling, radioactive waste, and other systems which may contain radioactivity shall be designed to assure adequate safety under normal and postulated accident conditions. These systems shall be designed (1) with a capability to permit appropriate periodic inspection and testing of components important to safety, (2) with suitable shielding for radiation protection, (3) with appropriate containment, confinement, and filtering systems, (4) with a residual heat removal capability having reliability and testability that reflects the importance to safety of decay heat and other residual heat removal, and (5) to prevent significant reduction in fuel storage coolant inventory under accident conditions.

Compliance

The Spent Fuel Pool Cooling and Cleanup System, Fuel Handling System, Radioactive Waste Processing Systems, and other systems that contain radioactivity are designed to assure adequate safety under normal and postulated accident conditions.

1. Components are designed and located such that appropriate periodic examination testing may be performed.

2. Areas of the plant are designed with suitable shielding for radiation protection based on anticipated radiation dose rates and occupancy as discussed in subsection 12.1.

3. Individual components which contain significant radioactivity are located in confined areas which are adequately ventilated through appropriate filtering systems when necessary.

4. The spent fuel cooling systems provide cooling to remove residual heat from the fuel stored in the spent fuel pool. The system is designed for testability to permit continued heat removal.

5. The spent fuel pool is designed such that no postulated accident could cause excessive loss of coolant inventory.

Radioactive waste treatment systems are located in the Auxiliary Building which contains or confines leakage under normal and accident conditions.

The Auxiliary Building Gas Treatment System includes filtration which minimizes radioactive material release associated with a postulated spent fuel handling accident.

Fuel storage and handling is discussed in subsection 9.1, and radioactive waste management in Chapter 11.

Criterion 62 - Prevention of Criticality in Fuel Storage and Handling.

Criticality in the fuel storage and handling system shall be prevented by physical systems or processes, preferably by use of geometrically safe configurations.

Compliance

The center-to-center distance between the adjacent spent fuel assemblies, together with the use of fixed boral neutron absorber panels in the storage racks and burnup credit administrative controls on fuel assembly placement, is sufficient to ensure subcriticality, even if unborated water is used to fill the spent fuel storage pool.

The design of the spent fuel storage rack modules in the spent fuel pool is such that it is impossible to insert the spent fuel assemblies in other than prescribed locations, e.g., outside of a storage cell adjacent to a rack module. Credit for borated water is permitted for inadvertent misplacement of an assembly e.g., loading of a fresh fuel assembly in a storage cell designated for exposed fuel in accordance with 10 CFR 50.68(b). Although it would be possible to place a fuel assembly outside of and adjacent to the rack module in the cask loading area of the cask pit adjacent to the spent fuel pool, subcriticality even in the absence of boron would be insured because storage in that area is administratively restricted to exposed fuel.

Layout of the fuel handling area is such that the spent fuel casks will never be required to traverse the spent fuel storage pool during removal of the spent fuel assemblies.

The restraints and interlocks provided for safe handling and storage of new or spent fuel are discussed in subsection 9.1.

Criterion 63 - Monitoring Fuel and Waste Storage.

Appropriate systems shall be provided in fuel storage and radioactive waste systems and associated handling areas (1) to detect conditions that may result in loss of residual heat removal capability and excessive radiation levels and (2) to initiate appropriate safety actions.

Compliance

Failure in the Spent Fuel Pool Cooling and Cleanup System and high radiation in the spent fuel storage and radioactive waste areas will produce both local and control room alarms. The operator can then take appropriate action to alleviate the situation.

Subsection 11.4 discusses the process and effluent radiological monitoring system.

Criterion 64 - Monitoring Radioactivity Releases.

Means shall be provided for monitoring the reactor containment atmosphere, spaces containing components for recirculation of LOCA fluids, effluent discharge paths, and the plant environs for radioactivity that may be released from normal operations, including anticipated operational occurrences, and from postulated accidents.

Compliance

The facility contains means for monitoring the containment atmosphere and all other important areas during both normal and accident conditions to detect and measure radioactivity which could be released under any conditions. The monitoring system includes indication and alarms to warn of high activity.

Subsections 11.4 and 12.1.4 discuss the process and effluent and area radiological monitoring systems; subsection 11.6 describes the offsite monitoring program.

3.2 CLASSIFICATION OF STRUCTURES, SYSTEMS, AND COMPONENTS

3.2.1 Seismic Qualifications

The Sequoyah Nuclear Plant structures, systems, and components important to safety have been designed to remain functional in the event of a Safe Shutdown Earthquake (SSE). These structures, systems, and components, designated as Category I, are those necessary to assure:

1. The integrity of the reactor coolant pressure boundary.

2. The capability to shut down the reactor and maintain it in a safe shutdown condition.

3. The capability to prevent or mitigate the consequences of accidents which could result in potential offsite exposures comparable to the guideline exposures of 10 CFR Part 100.

Moreover, those safety-related structures, systems, and components necessary to assure the above requirements, have been designed such that primary stress limits are well within the material yield limits for the loading effects of vibratory motion of at least 50 percent of the SSE.

Those components which are not essential to safe shutdown and isolation of the reactor but whose failure could jeopardize, to an unacceptable extent, the achievement of a primary safety function are considered Category I (L) safety related. Where portions of mechanical systems are Category I and the remaining portions not seismically classified, the systems have been seismically qualified through the first seismic restraint beyond the defined boundary such as a valve.

Category I and I (L) safety-related structures, portions of mechanical systems (excluding piping), and electrical systems and components are listed in Tables 3.2.1-1, 3.2.1-2, and 3.2.1-3, respectively. These structures, systems, and components are classified to the extent practical in accordance with NRC Regulatory Guide 1.29 R2 "Seismic Design Classification" and are designed to remain functional as required to safely shutdown and maintain the reactor in a safe condition after a SSE event. Exceptions are documented and justified in individual system design criteria documents.

3.2.2 System Quality Group Classification (Fluid Components)

Fluid system components for the Sequoyah Nuclear Plant that are important to nuclear safety have been classified by TVA as Class A, B, C, or D. (Some exceptions to these classes do exist but have been evaluated as acceptable.) For other non-piping component TVA classifications important to nuclear safety see subparagraph 3.2.2.5, Table 3.2.1-2, Table 3.2.2-1, and Table 3.2.2-3. The importance, as established by class assignment, has been considered in the design, material selection, manufacture or fabrication, assembly, erection, construction, and operational aspects.

3.2.2.1 Class A

Class A applies to reactor coolant pressure boundary components whose failure could cause a loss of reactor coolant which would not permit an orderly reactor shutdown and cooldown, assuming that makeup is only provided by the normal makeup system. Branch piping that is

larger than 3/8-inch inside diameter and that does not have a 3/8-inch or smaller orifice is included in Class A out to and including the second valve that is either normally closed or capable of automatic closure. Branch piping 3/8-inch inside diameter or smaller, or protected by a 3/8-inch diameter or smaller orifice, is exempt from Class A. The 3/4-inch branch piping for the pressurizer steam space instrumentation nozzles is exempt for Class A since the mass flow rate of saturated steam from the pressurizer is less than normal makeup flow.

3.2.2.2 Class B

Safety Class B applies to those components of safety systems necessary to fulfill a system safety function. The classification is specifically applicable to containment and to components of those safety systems, or portions thereof, through which reactor coolant water flows directly from the Reactor Coolant System or the containment sump.

The following are examples of Class B:

1. Residual Heat Removal (RHR) System.

2. Portion of Containment Spray System which may recirculate reactor coolant.

3. Extensions of containment.

4. Chemical and Volume Control System, including the portions of letdown and makeup lines.

5. Safety Injection System outside the limits of the reactor coolant pressure boundary which may recirculate reactor coolant.

6. Main Steam System from steam generator outlet through the anchor including power relief valves, safety valves, and isolation valves.

7. Feedwater System from the steam generator inlet back through the isolation valves and anchor.

8. Portions of the Reactor Coolant Pressure Boundary not covered under Class A.

9. Auxiliary feedwater from the main feedwater piping through first check valve outside containment.

10. All instrument sensing lines from systems covered by TVA Classes A and B from root valve through local panel shutoff valve.

11. All sampling or radiation monitoring lines from systems covered by TVA Classes A and B from root valve through first valve in sampling or radiation lines, or through second containment isolation valve if sample or radiation lines are extensions of containment.

12. Containment penetrations (between and including inboard and outboard isolation valves).

13. Air Return Fan System boundary between upper and lower compartments at the divider barrier.

3.2.2.3 Class C

Class C applies to components of those safety systems that are important to safe operation and shutdown of the reactor but that do not recirculate reactor coolant.

The following are examples of Class C:

1. Suction piping from refueling water storage tank to Emergency Core Cooling System.

2. Portions of the AFW System upstream of the first check valve outside of containment through the check valve in each pump suction line.

3. Portions of ERCW System that cool safety systems.

4. Accumulator discharge piping to accumulator isolation valve.

5. The portions of the Component Cooling System that cool safety systems or supply cooling to equipment essential for plant operation.

6. The portions of CVCS that supply boric acid to the Makeup System.

7. The portions of the Containment Spray System not covered under Class B.

8. Spent Fuel Pool Cooling and Cleanup System and components of fluid systems required for spent fuel cooling. (Embedded pipe welds are Class C.)

9. Auxiliary Control Air System not covered by Class B.

10. All instrument sensing lines from systems covered by TVA Classes C and D from root valve through local panel shutoff valve; also from local panel sensing line shutoff valve to, but not including, pressure boundary instruments and through the drain valves.

11. All sampling or radiation monitoring lines from systems covered by TVA Classes C and D from root valve through first valve in sampling or radiation lines, or up to the containment isolation valve if sample or radiation lines are extensions of containment.

3.2.2.4 Class D

Class D applies to components when their failure would result in release of radioactive gases to the environment and they are not included in safety classes A, B, or C.

The following are examples of safety Class D:

1. CVC System portions not covered by Classes B or C.

2. Portions of Waste Disposal System.

3.2.2.5 Relationship of Applicable Codes to Safety Classification for Mechanical Components

The applicable codes used for design and fabrication of mechanical system components (other than piping) for the various safety classes are summarized in Table 3.2.2-1. For each of these components, the applicable safety classification, design and fabrication code, and quality assurance requirement are included in Table 3.2.1-2.

Piping design and fabrication code requirements for the primary reactor coolant loops and auxiliary piping (Class A) are discussed in Chapter 5, Section 5.5.3. The applicable codes used for design and fabrication of other piping, and the erection, inspection, and testing of piping systems for the various safety classes, are summarized in Table 3.2.2-2.

Regulatory Guide 1.26, Quality Group Classifications and Standards for Water, Steam, and Radioactive-Waste-Containing Components of Nuclear Power Plants, is utilized to determine the applicability of the requirements of Tables 3.2.2-1 and 3.2.2-2 to certain exempt components within TVA Class B, C, and D boundaries. Regulatory Guide 1.26 does not cover systems such as instrument and service air, the diesel engines and their generators and auxiliary support systems, diesel fuel, emergency and normal ventilation, fuel handling and radioactive waste management systems. These systems are designed, fabricated, erected and tested to quality standards commensurate with the safety function to be performed. In general, fluid system components in the above systems are qualified in an equivalent manner to the requirements of Tables 3.2.2-1 and 3.2.2-2 for similar components. These equivalent standards are determined on a case-by-case basis.

In certain cases, TVA Class A, B, C, and D components cannot be purchased in full compliance with the requirements of Tables 3.2.2-1 and 3.2.2-2. In these cases, commercial quality components must be dedicated, or verified acceptable, for TVA Class A, B, C, or D service. This dedication process will be accomplished in accordance with applicable QA program documents.

ASME Section XI Code Class boundary equivalencies are shown on color-coded flow and instrumentation diagrams. (The color-coded diagram drawing number is suffixed by "-ISI".) The bases for these boundaries are documented in plant procedures. The ASME Section XI Code Class boundaries were developed by reviewing the safety function of each component on the applicable flow and instrumentation diagrams in accordance with American National Standard (ANS) N18.2, NRC Regulatory Guide 1.26, and 10 CFR 50.2 (for reactor coolant pressure boundary). Differences between the design boundaries (identified by TVA Classes on the flow diagrams) and the ASME Section XI boundaries (identified by the color-coded ISI boundary diagrams) are primarily due to the use of both the ANS N18.2-August 1970 draft and ANS N18.2-1973 for design safety classifications and the use of Regulatory Guide 1.26 for the original ASME Section XI boundaries. Additional details on the Section XI boundary bases and the corresponding classification criteria are located in plant procedures.

3.2.2.6 Nonnuclear Safety Class (NNS)

Components that are used in the Containment, Auxiliary, and Diesel Generator Buildings, whose failure will not result in a release of radioactive products and will not jeopardize safe shutdown of the reactor, have been assigned classifications that range from Class E through Class V. Since

these components complement safety-related components during normal operation and are in close proximity to them, they are designed to code requirements that will assure the integrity of the systems such that the minimum capability of safety components will not be compromised. These components are designated as either Seismic Category I(L)A - Pressure boundary retention or Seismic Category I(L)B - position retention. The applicable codes, along with the seismic considerations used for the design of the components covered by these classifications, are shown in Table 3.2.2-3.

3.2.3 References

1. TID-7024, "Nuclear Reactors and Earthquakes," August 1963.

2. Housner, G. W., "Design of Nuclear Power Reactors Against Earthquakes," Proceedings of the Second World Conference on Earthquake Engineering, vol. I, pp 133, 134, and 137, Japan, 1960.

3. Report issued January 1987, by the SQN Heat Code Traceability Task Group, "Materials Traceability for Piping Systems - Sequoyah Nuclear Plant" (B25 870225 036).

4. Memorandum from S. A. White to W. R. Brown on May 4, 1987, "Heat Code Traceability Issues at Sequoyah Nuclear Plant Dated April 21, 1987" (A02 870428 034).

TABLE 3.2.1-1

CATEGORY I STRUCTURES

1. Reactor Building (includes Shield Building and all interior concrete structures)
2. Steel Containment Vessel
3. Auxiliary Building
4. Additional Equipment Building
5. Control Building
6. East Steam Valve Rooms
7. Condenser Cooling Water Intake Pumping Structure
8. Diesel Generator Building
9. Underground Concrete Encased Electrical Conduit Banks, Manholes, and Handholes for Class 1E Circuits
10. Essential Raw Cooling Water Intake Pumping Structure, Access Cells, and Pile Supported ERCW Piping Support Slab
11. Refueling Water Storage Tank and Foundation
12. Piping Tunnels Containing Classes A, B, C, or D Piping or Tubing
13. Condensate Demineralizer Waste Evaporator Building
14. Waste Packaging Area of the Auxiliary Building
15. Additional Diesel Generator Building (Refer to Note)

Note:
The Additional Diesel Generator Building (ADGB) was designed and constructed as a Category I structure. Modifications were performed to install Flexible Mitigation Strategies (FLEX) Response equipment to mitigate Beyond-Design-Basis External Events described in SQN-DC-V-48.0; FSAR Reference 3.13.2.1. The ADGB contains unisolable sections of safety-related ERCW piping. Blind flanges were installed where the piping immediately emerges through the base slab floor and a missile protection structure was installed over the blind flanges. The Category I qualification applies to portions of the building structure required to support and protect the ERCW piping which consists of the base slab floor and the missile protection structure.

Table 3.2.1-2 (Sheet 1)

SUMMARY OF CRITERIA - MECHANICAL SYSTEM COMPONENTS (EXCLUDING PIPING)

Component	Scope (1)	Safety Class (2)	Code (3)	QA Reqd (4)	Location (5)	Rad Source (6)	Seismic Category (7)
Reactor Coolant System							
Reactor Vessel	W	A	III-A	X	C	X	I
Reactor Coolant Pump Pressure Boundary	W	A	III-A	X	C	X	I
Steam Generators (Tube)	W-CE	A	III-A	X	C	X	I
(Shell)	W-CE	B	III-A	X	C	X	I
Pressurizer	W	A	III-A	X	C	X	I
Pressurizer Relief Valves	W	A	IIIa9	X	C	X	I
Pressurizer Safety Valves	W	A	IIIa9	X	C	X	I
Pressurizer Relief Tank	W	G	VIII	X	C	P	I(L)
Safety Injection System							
* Safety Injection Pumps	W	B	P&V-II	X	AB	X	I
Accumulator (9)	W	B	III-C	X	C	P	I
* Injection Tank	W	B	III-C	X	AB	X	I
* Refueling Water Storage Tank	T	C	D100	X	O	P	I
* Orifice	W	-	III-C		AB	P	I
Residual Heat Removal System							
* RHR Pumps	W	B	P&V-II	X	AB	X	I
* RHR Heat Exchangers (Tube)	W	B	III-C	X	AB	X	I
(Shell)	W	C	VIII	X	AB	P	I
Containment Spray System							
* CS Pumps	T	B	P&V-II	X	AB	X	I
* CS Heat Exchangers (Tube)	T	B	III-2 for 1A and 1B III-C for 2A and 2B	X	AB	X	I
(Shell)	T	C	VIII	X	AB	P	I
CS Nozzles	T	B	III-2	X	C	X	I
Primary Water Make-Up System							
* Pump	T	G	HI	-	AB	-	I(L)
* Tank	T	G	(14)	X	AB	-	I

Table 3.2.1-2 (Sheet 2)

SUMMARY OF CRITERIA - MECHANICAL SYSTEM COMPONENTS (EXCLUDING PIPING)

Component	Scope (1)	Safety Class (2)	Code (3)	QA Reqd (4)	Location (5)	Rad Source (6)	Seismic. Category(7)
Chemical and Volume Control System							
Pumps							
* Charging, Centrifugal	W	B	P&V-II	X	AB	X	I
* Boric Acid Transfer	W	C	P&V-III	X	AB	P	I
Heat Exchangers							
Regenerative (Tube and Shell)	W	B	III-C	X	C	X	I
* Letdown (Tube)	W	B	III-C	X	AB	X	I
(Shell)	W	C	VIII	X	AB	P	I
Excess Letdown (Tube)	W	B	III-C	X	C	X	I
(Shell)	W	C	VIII	X	C	P	I
* Seal Water (Tube)	W	B	III-C	X	AB	X	I
(Shell)	W	C	VIII	X	AB	P	I
Tanks							
* Volume Control	W	B	III-C	X	AB	X	I
* Boric Acid	W	C	VIII	X	AB	P	I
* Boric Acid Batching	W	G	VIII	-	AB	-	I(L)
* Chemical Mixing	W	-	VIII	-	AB	-	I(L)
* Resin Fill	W	G	VIII	-	AB	-	I(L)
Steam Generator Blowdown System							
SG Blowdown Isolation Valves	T	B	III-2	X	AB	P	I
Auxiliary Air Systems							
Compressor	T	C	-	X	AB	-	I
Receivers	T	C	VIII	X	AB	-	I
Air Dryers	T	C	III-3	X	AB	-	I
Ice Condenser							
Ice Baskets	W	C	-	X	C	-	I
Lower Inlet Doors	W	C	-	X	C	-	I
Lattice Frames	W	C	-	X	C	-	I

Table 3.2.1-2 (Sheet 3)

SUMMARY OF CRITERIA - MECHANICAL SYSTEM COMPONENTS (EXCLUDING PIPING)

Component	Scope (1)	Safety Class (2)	Code (3)	QA Reqd (4)	Location (5)	Rad Source (6)	Seismic. Category(7)
Lattice Frame Columns	W	C	-	X	C	-	I
Lower Support Structure	W	C	-	X	C	-	I
Intermediate Deck Doors	W	C	-	X	C	-	I
Wall Panels	W	C	-	X	C	-	I
Floor Structures	W,T	C	-	X	C	-	I
Top Deck Doors	W	C	-	X	C	-	I
Air Handling Unit Supports	W	C	-	X	C	-	I
Top Deck Beams	W	C	-	X	C	-	I
Refrigeration System	W	-	-	-	C,AB	-	I(L)
Ice Machine	W	-	-	-	AB	-	I(L)
Ice Condenser Bridge Crane	W	-	-	-	C	-	I(L)
Containment Isolation System							
* Valves	T	B	P&V-II	X	C,AB	X,P	I
Air Return Fans	T	(10)	AMCA	X	C	-	I
Component Cooling System							
* Pumps - Main	T	C	P&V-III	X	AB	P	I
- Thermal Barrier	T	C	P&V-III	X	C	P	I
- Seal Leakage Return	T	G	-	-	AB	P	I(L)
* Heat Exchangers	T	C	VIII	X	AB	P	I
Surge Tank	T	C	III-3	X	AB	P	I
Valves (Containment Isolation)	T	B	P&V-II	X	C	-	I
* Valves	T	C	P&V-III	X	AB,C	-	I
Radioactive Waste Disposal System							
Tanks							
* Chemical Drain	W	G	VIII	-	AB	X	I(L)
Reactor Coolant Drain	W	G	III-C	-	C	X	I(L)
* Tritiated Drain Collector	W	G	VIII	-	AB	X	I(L)
* Sump	W	G	VIII	-	AB	X	I(L)
* Spent Resin Storage	W	G	VIII	-	AB	X	I(L)
* Gas Decay	W	D	III-C	X	AB	X	I

Table 3.2.1-2 (Sheet 4)

SUMMARY OF CRITERIA - MECHANICAL SYSTEM COMPONENTS (EXCLUDING PIPING)

Component	Scope (1)	Safety Class (2)	Code (3)	QA Reqd (4)	Location (5)	Rad Source (6)	Seismic. Category(7)
Pumps							
Reactor Coolant Drain Tank Pumps	W	G	HI	-	C	X	I(L)
* Chemical Drain Tank Pump	W	G	HI	-	AB	X	I(L)
* Sump Tank Pumps	W	G	HI	-	AB	X	I(L)
Miscellaneous							
* Waste Gas Compressor Package	W	D	(16)	X	AB	X	I
* Waste Gas Filter	T	G	III-C	-	AB	X	I(L)
* Automatic Gas Analyzer	W	-	-	-	AB	P	I
* Hydraulic Compactor	W	-	-	-	AB	P	-
Fire Protection System							
* Fire/Flood Mode Pumps (submersible) (Intake Pumping Station)	T	C	P&V-III	X	0	-	I
Station Ventilation Systems							
Containment Ventilation							
Containment Purge							
* Fans Exhaust	T	10	AMCA	X	AB	-	I
* Filters:							
Charcoal	T	(10)	AACC	X	AB	P	I
HEPA	T	(10)	MIL-F	X	AB	P	I
Prefilter	T	(10)	UL900	X	AB	P	I
Other Systems							
* Fan/Coil Units (Supply)	T	-	AMCA	X	AB	X	I(L)
* Supply Air Filters	T	-	UL900	X	AB	X	I(L)
Auxiliary Building Ventilation							
* Fan/Coil Units	T	-	AMCA	X	AB	-	I(L)
* Filters:							
Pre-Intake	T	-	UL900	X	AB	P	I(L)
Bag-Intake	T	-	-	X	AB	P	I(L)
* ESF Room Coolers	T	(10)	-	X	AB	P	I
Air Conditioning Systems	T	-	-	X	AB	-	I(L)

Table 3.2.1-2 (Sheet 5)

SUMMARY OF CRITERIA - MECHANICAL SYSTEM COMPONENTS (EXCLUDING PIPING)

Component	Scope (1)	Safety Class (2)	Code (3)	QA Reqd (4)	Location (5)	Rad Source (6)	Seismic. Category(7)
Control Building Ventilation							
* Fans (cleanup, pressurizing)	T	(10)	AMCA	X	CB	-	I
* Filters	T	(10)	(18)	X	CB	P	I
* Air Conditioning Unit							
(Elec. Board Room)	T	(10)	-	X	CB	-	I
Air Conditioning Unit (MCR)	T	(10)	-	X	CB	-	I
Diesel Building Ventilation							
Fans	T	(10)	AMCA	X	DB	P	I
Main Steam System							
* Isolation Valves	T	B	P&V-II	X	AB	-	I
* Isolation Bypass Valves	T	B	III-2	X	AB	-	I
Feedwater System							
* Stop Valves	T	B	P&V-II	X	AB	-	I
Auxiliary Feedwater System							
Auxiliary Feedwater Pumps							
* Motor Driven	T	C	P&V-III	X	AB	-	I
* Steam Turbine Driven	T	C	P&V-III	X	AB	-	I
Feedwater System							
* Steam Generator	W	B	III-B	X	C	-	I
Feedwater Nozzle							
Thermal Liner							
(Unit 2, Loops 2, 3, & 4;							
Unit 1, Loops 1, 2, 3, & 4)							
S/G Main Steam System							
Relief Valves	T	B	P&V-II	X	AB	-	I
Safety Valves	T	B	P&V-II	X	AB	-	I
Spent Fuel Pool Cooling and Cleanup System							
* Spent Fuel Pool Heat Exch. (Tube)	W	C	III-C	X	AB	X	I
(Shell)	W	C	VIII	X	AB	-	I

Table 3.2.1-2 (Sheet 6)

SUMMARY OF CRITERIA - MECHANICAL SYSTEM COMPONENTS (EXCLUDING PIPING)

Component	Scope (1)	Safety Class (2)	Code (3)	QA Reqd (4)	Location (5)	Rad Source (6)	Seismic. Category(7)
Spent Fuel Pool Pump	W	C	P&V-III	X	AB	X	I
* Spent Fuel Pool Filter	W	G	VIII(13)	-	AB	X	I(L)
* Spent Fuel Pool Demineralizer	W	G	VIII(13)	-	AB	X	I(L)
* Spent Fuel Pool Strainer	W	C	VIII	X	AB	X	I
* Spent Fuel Pool Skimmer Pump	W	G	P&V-III	-	AB	X	I(L)
* Spent Fuel Pool Skimmer Strainer	W	G	VIII	-	AB	X	I(L)
* Spent Fuel Pool Skimmer Filter	W	G	VIII(13)	-	AB	X	I(L)
Fuel Handling System							
Manipulator Crane, Reactor Cavity	W	-	-	-	C	-	I(L)
Reactor Vessel Head Lifting Device	W	-	-	-	C	-	I(L)
Reactor Internals Lifting Device	W	-	-	-	C	-	I(L)
Spent Fuel Pool Bridge and Hoist	W	-	-	-	AB	-	I(L)
Rod Cluster Cont. Chg. Fixture	W	-	-	-	-	-	I(L)
Reactor Vessel Stud Tensioner	W	-	-	-	-	-	I(L)
Spent Fuel Handling Tool	W	-	-	-	-	-	I(L)
Fuel Transfer System							
Fuel Transfer Tube and Flange	W	B	-	X	C,AB	P	I
Conveyor System and Controls	W	-	-	-	C,AB	P	I(L)
New and Spent Fuel Storage Racks	T	-	-	-	AB	X	I
Emergency Diesel Fuel Oil System							
Transfer Pumps	T	G	B31.1	-	DB	-	I(L)
Diesel Oil Tanks (7-day)	T	I	VIIIW	-	DB	-	I
Sampling Systems							
* Sample Heat Exchanger	T	G	VIII	-	AB	X	I(L)
* Sample Vessel	T	G	VIII	-	AB	X	I(L)
Delay Coil	T	B	B31.1	X	C	X	I
Sample Heat Exchanger (PASF)	T	C	VIII(12)	X	AB	P	I

Table 3.2.1-2 (Sheet 7)

SUMMARY OF CRITERIA - MECHANICAL SYSTEM COMPONENTS (EXCLUDING PIPING)

Component	Scope (1)	Safety Class (2)	Code (3)	QA Reqd (4)	Location (5)	Rad Source (6)	Seismic. Category(7)
Cask Decontamination System							
* Pump	W	G	HI	-	AB	-	I(L)
Tank	T	-	D100	-	AB	-	NA
Chemical and Volume Control System							
* Mixed Bed	W	D	III-C	X	AB	X	I
* Cation	W	D	III-C	X	AB	X	I
Filters							
* Reactor Coolant	W	B	III-C	X	AB	X	I
* Seal Water Return	W	B	III-C	X	AB	X	I
* Seal Water Injection	W	B	III-C	X	AB	X	I
* Boric Acid	W	C	III-C	X	AB	-	I
Miscellaneous							
Letdown Orifices	W	B	B31.1	X	C	X	I
* Boric Acid Blender	W	C	-	X	AB	-	I
Boron Recovery System							
Pumps							
* Holdup Tank Recirc.	W	D	P&V-III	X	AB	X	I
* Gas Stripper Feed	W	D	P&V-III	X	AB	X	I
* Monitor Tank	W	G	P&V-III	X	AB	P	I(L)
Tanks							
* Holdup	T	D	III	X	AB	X	I
* Monitor	T	G	III	X	AB	P	I(L)
Emergency Gas Treatment System							
Fans	T	(10)	AMCA(10)	X	AB	P	I
Filters	T	(10)	(18)	X	AB	P	I
Moisture Separator	T	(10)	-	X	AB	X	I
Dampers	T	(10)	-	X	AB,C	P	I
Ducting	T	(10)	-	X	AB,C	P	I

Table 3.2.1-2 (Sheet 8)

SUMMARY OF CRITERIA - MECHANICAL SYSTEM COMPONENTS (EXCLUDING PIPING)

Component	Scope (1)	Safety Class (2)	Code (3)	QA Reqd (4)	Location (5)	Rad Source (6)	Seismic. Category(7)
Auxiliary Building Gas Treatment System							
*Fans	T	(10)	AMCA(10)	X	AB	P	I
*Filters	T	(10)	(18)	X	AB	P	I
Essential Raw Cooling Water							
ERCW Pumps (ERCW Pumping Station)	T	C	B58.1 & III-3	X	O	-	I
Containment Isolation Valves	T	B	P&VII & III-2	X	C	-	I
Valves	T	C	P&VIII & III-3	X	AB,C,DB,CB	-	I
Valves (yard)	T	C	P&VIII & III-3	X	O	-	I
Valves (yard)	T	C	P&VIII & III-3	X	B	-	I
Screen Wash Pumps (ERCW Pumping Station)	T	C	B58.1	X	O	-	I
Backwashing Strainers (ERCW Pumping Station)	T	C	III-3	X	O	-	I
Traveling Water Screens (ERCW Pumping Station)	T	C	-	X	O	-	I
Screenwash Valves (ERCW Pumping Station	T	(12)	B31.1	X	O	-	I
Gutted Strainers (Intake Pumping Station)	T	C	VIII	X	O	-	I
Reactor Building Jib Crane		-	-	-	C	-	I (L)

Table 3.2.1-2 (Sheet 9)
(Notes)
SUMMARY OF CRITERIA - MECHANICAL SYSTEM COMPONENTS (EXCLUDING PIPING)

Notes:

(1) T = Tennessee Valley Authority
W = Westinghouse
W-CE = Westinghouse, Combustion Engineering Nuclear Power LLC (CENP)

(2) A = TVA Safety Class A
B = TVA Safety Class B
C = TVA Safety Class C
D = TVA Safety Class D
G = TVA Safety Class G
I = Seismic Class I, part of structure

(3) III-A = ASME Boiler and Pressure Vessel Code - Section III, Class A
III-B = ASME Boiler and Pressure Vessel Code - Section III, Class B
III-C = ASME Boiler and Pressure Vessel Code - Section III, Class C
IIIa9 = ASME Boiler and Pressure Vessel Code - Section III, Article 9 "Protection Against Overpressure"
VIII = ASME Boiler and Pressure Vessel Code - Section VIII
P&V-I = Draft ASME Code for Pumps and Valves for Nuclear Power, Class I, dated 1968
P&V-II = Draft ASME Code for Pumps and Valves for Nuclear Power, Class II, dated 1968, and March 1970 Addenda
P&V-III = Draft ASME Code for Pumps and Valves for Nuclear Power, Class III, dated 1968, and March 1970 Addenda
D100 = American Waterworks Association, Standard for Steel Tanks, Standpipes, Reservoirs, and Elevated Tanks for Water Storage, AWWA, D100
API-620 = American Petroleum Institute Recommended Rules for Design and Construction of Large Welded Low Pressure Storage Tanks
B31.1 = ANSI B31.1.0 (1967)
D = Designed in accordance with
ACI = American Concrete Institute
AACC = AACC CS8T - American Association for Contamination Control - Standard for High Efficiency Gas - Phase Adsorber Cells (July 1972)
MIL-F = MIL-F-51068C - Military Specification - Filter, Particulate, High Efficiency, Fire Resistant (1970)
UL-900 = UL-900-1971 - Underwriters Laboratory - Standard for Safety for Air Filter Units (1971)
AMCA = AMCA Publication 99 - Air Moving and Conditioning Association, Inc., AMCA Standards Handbook (1967)
NFPA = National Fire Protection Association
III-2 = ASME Boiler and Pressure Vessel Code - Section III, Class 2
III-3 = ASME Boiler and Pressure Vessel Code - Section III, Class 3
B58.1 = ANSI B58.1, Vertical Turbine Pumps

Table 3.2.1-2 (Sheet 10)
(Notes)
SUMMARY OF CRITERIA - MECHANICAL SYSTEM COMPONENTS (EXCLUDING PIPING)

Notes (continued)

HI = Standards of Hydraulic Institute

See Section 3.2.2.5 for further clarification of the applicability of these standards.

(4) Safety-related quality assurance required:
X = Yes, - = No

(5) C = Containment
AB = Auxiliary Building
DB = Diesel Generator Building
SB = Service Building
O = Outdoors above ground
B = Buried in ground
CB = Control Building
TB = Turbine Building

(6) X = Source of radiation
- = No source of radiation
P = Possible source of radiation

(7) I = Seismic Category I
I(L) = Seismic Category I(L)

(8) AMCA Class III and performance tested in accordance with AMCA Standard Air Moving Devices

(9) Performance test required

(10) Those components of the Heating, Ventilating, and Air Conditioning System (HVAC), which are not covered directly by the TVA piping classifications of subsection 3.2.2, have been designed and constructed to standards and specifications which are equivalent to ANS Safety Class 2b. Safety Class 2b (TVA Class Q) Main Control Room air flow delivery components (around flexible ducting, triangular fiberglass ducting, and air bars) and the suspended ceiling which supports them are qualified to Seismic Category I(L) requirements, analyzed to ensure that the components will remain in place, the physical configuration will be maintained such that flow will not be impeded, and the ducting pressure boundary will not be lost. See Section 3.7.3.16. The air flow delivery components are constructed of standard commercial grade materials. Limited QA requirements ensure they are maintained as qualified.

(11) This equipment is not required for two unit operation.

(12) This equipment meets the intent of TVA Class C for this application.

(13) Class G vessels are required as a minimum to be designed, manufactured, and inspected in accordance with ASME B&PV Code Section VIII, Division 1. This component was designed, manufactured, and inspected in accordance with stricter requirements of ASME B&PV Code Section III, Class C for safety-related vessels.

Table 3.2.1-2 (Sheet 11)
(Notes)
SUMMARY OF CRITERIA - MECHANICAL SYSTEM COMPONENTS (EXCLUDING PIPING)

Notes (continued)

(14) Field fabricated reservoirs shall meet requirements of American Waterworks Association, Standard for Steel Tanks, Standpipes, Reservoirs, and Elevated Tanks for Water Storage AWWA-DIOU or welded steel tanks for oil storage API-650.

(15) Class G components are required to be qualified, as a minimum, to Seismic Category I(L), per TVA Design Criteria SQN-DC-V-3.0. This component, however, was actually qualified to Seismic Category I.

(16) Various: Piping B31.1
Vessels III-3
Pumps and Valves P&V-I

(17) Design changes to the CDWE to make it capable of processing radwaste originally intended to be processed through the waste and auxiliary waste evaporators were done per ANSI B31.1 (1967).

(18) Charcoal filters AHCC, HEPA filters MIL-F, Prefilters UL900. Prefilters are not installed in Control Room Emergency Cleanup System but are installed in the Control Room AHUS.

* Denotes equipment which will be inundated during maximum flood.

Table 3.2.1-3 (Sheet 1)

ELECTRICAL POWER SYSTEM EQUIPMENT DESIGNED TO OPERATE DURING

AND AFTER A "SAFE SHUTDOWN EARTHQUAKE"

Equipment	Number Per Unit / Number In Plant	Qualified in Conformance with IEEE 344-1971[1]
6.9-kV Auxiliary Power System		
6.9-kV shutdown boards	2/4	Yes (2)
(Unit 1) 1A-A, 1B-B (Unit 2) 2A-A, 2B-B		
6.9-kV shutdown logic relay panels	2/4	Yes
(Unit 1) 1A-A, 1B-B (Unit 2) 2A-A, 2B-B		
6.9-kV/480-V shutdown board transformers	6/12	Yes
1500 kVA (Unit 1) 1A1-A, 1A-A, 1A2-A, 1B1-B, 1B-B, 1B2-B (Unit 2) 2A1-A, 2A-A, 2A2-A, 2B1-B, 2B-B, 2B2-B		
6.9 kV/480-V pressurizer heater backup group transformers (500 kVA)	2/4	Yes (5)
(Unit 1) 1A-A, 1B-B (Unit 2) 2A-A, 2B-B		
6.9 kV/480-V ERCW transformers	2/4	Yes (5)
300 kVA (Unit 1) 1A-A, 1B-B (Unit 2) 2A-A, 2B-B		
480-V Auxiliary Power System		
480-V shutdown boards	4/8	Yes (4)
(Unit 1) 1A1-A, 1A2-A, 1B1-B, 1B2-B (Unit 2) 2A1-A, 2A2-A, 2B1-B, 2B2-B		

Table 3.2.1-3 (Sheet 2)
(Continued)

ELECTRICAL POWER SYSTEM EQUIPMENT DESIGNED TO OPERATE DURING

AND AFTER A "SAFE SHUTDOWN EARTHQUAKE"

Equipment	Number Per Unit / Number In Plant	Qualified in Conformance with IEEE 344-1971[1]
480-V Auxiliary Power System (cont'd.)		
480-V reactor MOV boards	4/8	Yes
(Unit 1) 1A1-A, 1B1-B, 1A2-A, 1B2.B (Unit 2) 2A1-A, 2A2-A, 2B1-B, 2B2-B		
480-V reactor vent boards	2/4	Yes
(Unit 1) 1A-A, 1B-B (Unit 2) 2A-A, 2B-B		
480-V control and auxiliary building vent boards	4/8	Yes
(Unit 1) 1A1-A, 1B1-B, 1A2-A, 1B2-B (Unit 2) 2A1-A, 2B1-B, 2A2-A, 2B2-B		
480-V diesel auxiliary boards	4/8	Yes
(Unit 1) 1A1-A, 1B1-B, 1A2-A, 1B2-B (Unit 2) 2A1-A, 2B1-B, 2A2-A, 2B2-B		
480-V distribution panelboards for pressurizer heater backup groups	2/4	Yes
(Unit 1) 1A-A, 1B-B (Unit 2) 2A-A, 2B-B		
480-V ERCW motor control centers	2/4	Yes (5)
(Unit 1) 1A-A, 1B-B (Unit 2) 2A-A, 2B-B		
480-V transfer device for component cooling system pump C-S	-/1	Yes

Table 3.2.1-3 (Sheet 3)
(Continued)

ELECTRICAL POWER SYSTEM EQUIPMENT DESIGNED TO OPERATE DURING

AND AFTER A "SAFE SHUTDOWN EARTHQUAKE"

Equipment	Number Per Unit / Number In Plant	Qualified in Conformance with IEEE 344-1971[1]
120-V ac Vital Plant Control Power System		
Static inverter system components	4/8	Yes
a. Auctioneer unit b. A transformer rectifier power supply c. A single phase static inverter with associated equipment for control, voltage, regulation, filtering, and instrumentation		
(Unit 1) 1-I, 1-II, 1-III, 1-IV (Unit 2) 2-I, 2-II, 2-III, 2-IV		
120-V ac vital instrument power boards	4/8	Yes
(Unit 1) 1-I, 1-II, 1-III, 1-IV (Unit 2) 2-I, 2-II, 2-III, 2-IV		
125-V dc Vital Plant Control Power System		
125-V dc vital battery chargers	3/6	Yes
(Unit 1) Chargers I and II, Spare Charger 1 (Unit 2) Chargers III and IV, Spare Charger 2		
Transfer devices for 125-V dc vital battery chargers	4/8	Yes
(Unit 1) Chargers I and II, (2) Spare Charger 1 (Unit 2) Chargers III and IV, (2) Spare Charger 2		
125-V vital batteries	2/4	Yes
(Unit 1) Batteries I and II (Unit 2) Batteries III and IV		
125-V dc vital battery boards	2/4	Yes
(Unit 1) I, II (Unit 2) III, IV		

Table 3.2.1-3 (Sheet 4)
(Continued)

ELECTRICAL POWER SYSTEM EQUIPMENT DESIGNED TO OPERATE DURING

AND AFTER A "SAFE SHUTDOWN EARTHQUAKE"

Equipment	Number Per Unit / Number In Plant	Qualified in Conformance with IEEE 344-1971[1]
Electrical Penetrations		
High voltage power penetrations	4/8	Yes
Nuclear instr. system penetrations	4/8	Yes
Control rod position indication penetrations	1/2	Yes
Low voltage, power, control, and indication penetrations	36/72	Yes (6)
Thermocouple penetrations	2/4	Yes
Onsite Electrical Power Source Components		
Diesel generator protective relay panels	2/4	Yes
(Unit 1) 1A, 1B (Unit 2) 2A, 2B		
Diesel control panels	2/4	Yes
125-V diesel generator batteries and battery racks	2/4	Yes (5)
DC distribution panels	2/4	Yes
125-V battery chargers	4/8	Yes
Standby diesel generators	2/4	Yes
(Unit 1) 1A-A, 1B-B (Unit 2) 2A-A, 2B-B		

(1) Those equipment items procured prior to publication of IEEE 344-1971 were purchased under specifications which TVA believes conform to the intent of that document.

(2) The 6.9-kV shutdown boards are qualified under Section 3.2.2.4.3 of IEEE 344-1971. The test unit withstood higher accelerations than shown on the frequency response spectrum for resonance at 1 percent damping. The test table input was eight times the rigid response floor acceleration, and actual damping is 5 percent.

Table 3.2.1-3 (Sheet 5)
(Continued)

(3) The 500-kVA transformers were shown analytically to have lower stress under seismic loading conditions than the 1500-kVA transformers which were tested. The 500-kVA transformers are similar in design and construction to the 1500-kVA transformers.

(4) The sine beat test was used with 5 cycles per beat instead of 10. A rationale for this test modification was furnished by the vendor and approved by TVA.

(5) This equipment qualified in conformance with IEEE 344-1975.

(6) Replacement penetrations have been qualified in conformance with IEEE 344-1975.

Table 3.2.2-1

SUMMARY OF CODES AND STANDARDS FOR REQUIREMENTS FOR SEQUOYAH MECHANICAL SYSTEM COMPONENTS EXCLUDING PIPING*

Code Classifications

Component	Group A**	Group B**	Group C**	Group D**
Pressure Vessels	ASME Boiler and Pressure Vessel Code, Section III, Class A, 1968 Edition	ASME Boiler and Pressure Vessel Code, Section III, Class C, 1968 Edition	ASME Boiler and Pressure Vessel Code, Section VIII, Division 1	ASME Boiler and Pressure Vessel Code, Section VIII, Division 1 or Equivalent
0-15 Psig Storage Tanks	-	ASME Boiler and Pressure Vessel Code, Section III, Class C, 1968 Edition	ASME Boiler and Pressure Vessel Code, Section VIII, Division 1	ASME Boiler and Pressure Vessel Code, Section VIII, Division 1
Atmospheric Storage Tanks	-	Storage Tank Codes API-650, AWWA D100, or ANSI B96.1	Storage Tank Codes API-650, AWWA D100, or ANSI B96.1	Storage Tank Codes API-650, AWWA D100, or ANSI B96.1
Pumps	Draft ASME Code for Pumps and Valves Class I	Draft ASME Code for Pumps and Valves Class II	Draft ASME Code for Pumps and Valves Class III	Draft ASME Code for Pumps and Valves Class III or Equivalent
Valves	MSS-SP-66, ANSI B16.5 and Draft ASME Code for Pumps and Valves Class I	MSS-SP-66, ANSI B16.5 and Draft ASME Code for Pumps and Valves Class II	MSS-SP-66, ANSI B16.5 and Draft ASME Code for Pumps and Valves Class III	MSS-SP-66, ANSI B16.5

* - Refer to Table 3.2.2-2 for Codes and Standards Summary for Piping. See Section 3.2.2.5 for further clarification of the applicability of this table.

** - Listed Codes apply generally for component procurements up through April 2, 1973. After this date, component procurements generally followed the code requirements, in effect on the procurement date, listed below (vessels, tanks, pumps, and valves):

Class A - ASME Section III, Division 1, Class 1; Class B - ASME Section III, Division 1, Class 2; and Class C/D - ASME Section III, Division 1, Class 3.

Specific Code applicability for each component is included in Table 3.2.1-2.

Table 3.2.2-2 (Sheet 1)

SUMMARY OF CODES AND STANDARDS REQUIREMENTS
FOR SEQUOYAH PIPING (1)

Safety Class ANS N18.2	TVA Class	Seismic Category	Design (2)	Material Procurement (3)	Field Fabrication Erection, NDE and Tests
1	A	I	B31.1.0(4)	B31.7 C1 I/ ASME III C1 1(5)	B31.7 C1 I(6) (7)
2a	B	I	B31.1.0(4)	B31.7 C1 II/ ASME III C1 2(5)	B31.7 C1 II (6) (8)
2b	C	I	B31.1.0(4)	B31.7 C1 III/ ASME III C1 3(5)	B31.7 C1 III (6)
3	D	I	B31.1.0(4)	B31.7 C1 III/ ASME III C1 3(5)	B31.7 C1 III (6)

General Notes:

Reference to B31.1.0 means USAS B31.1.0-1967, addenda, and applicable Code Cases, with the NDE and acceptance standards of B31.1 Nuclear Code Cases N7, N9, and N10. Addenda b-1971 provides for use of later codes by agreement.

Reference to B31.7 means USAS B31.7-1969 including Addenda a, b, and c. Portions of B31.7 were used in lieu of B31.1.0 and Nuclear Code Cases N7, N9, and N10 (procurement and construction).

Reference to ASME III means ASME Section III, Class 1, 2, and 3 as applicable; Edition and Addenda in effect on the procurement date.

Specific Notes:

(1) Refer to Table 3.2.2-1 for Codes and Standards Summary for Components Excluding Piping. Refer to Chapter 5, Section 5.5.3, for design and fabrication code requirements for reactor coolant loops and pressurizer surge line piping.

(2) Design includes activities such as initial material selection and sizing based on pressure/temperature considerations, use of allowable stress values in the sizing calculations, and analysis of piping to verify acceptable design basis.

Table 3.2.2-2 (Sheet 2)
(Continued)

SUMMARY OF CODES AND STANDARDS REQUIREMENTS FOR SEQUOYAH PIPING

(3) Procurement includes activities such as material examination based on product form, documentation and certification, and vendor fabrication, inspection, and testing as required by contract.

(4) Analysis was performed using B31.1.0, supplemented by use of the provisions of Class 2, NC-3600, ASME Section III, 1971 Edition up to and including Winter 1972 Addenda.

(5) B31.7 prior to April 2, 1973: ASME Section III after April 2, 1973 (except that already existing contracts were in general not revised to require ASME procurement).

(6) B31.7 Code Case 115 accepts the ASME Code Section III as meeting B31.7 requirements. This Code Case was used for Sequoyah piping after its issue.

(7) A statistically significant reverification sampling of TVA Class A piping installation was performed in late 1986 to confirm pressure boundary material identification and control practices during construction. This reverification confirmed a 92 percent rate of correct and verified material installation for piping items sampled. Of the remaining 8 percent, 1 1/2 percent of the items were confirmed to be lower TVA class material (Class B), and 6 1/2 percent were found to be potentially lower safety class material (material cannot be verified to meet Class A, nor can it be verified not to meet Class A: at a minimum, the material is TVA Class B). These discrepancies were found primarily in small bore piping items (2 inch nominal size and less), with one piece of 6 inch nominal pipe included in the 6 1/2 percent. A report was issued which contains sampling results, conclusions, and bases for conclusions (Ref. 3). A second evaluation of Class A piping was performed in accordance with paragraph 1-724 of ANSI B31.7c - 1971, which identified all material not meeting Class 1 requirements in accordance with this Code and Addenda (Ref. 4). All material required by this Code and Addenda to meet B31.7 Class 1 requirements has been either verified to comply with ANSI B31.7c - 1971 or has been upgraded in place to meet the applicable requirements.

(8) Leak testing provisions of B31.1.0 were used for circumferential welds in process piping that form part of the containment isolation boundary and are located within containment penetration assemblies. 100 percent radiography was substituted for hydrostatic leak test of these welds.

Table 3.2.2-3 (Sheet 1)

Non-Nuclear Safety Classifications

TVA Piping System Class	Code Jurisdiction*	Design For Seismic Loading
E	Class II, ANSI B31.7 (1969) and Draft ASME Pump and Valve Code for Nuclear Application (1968)	No
F	Class III, ANSI B31.7 (1969) and Draft ASME Pump and Valve Code for Nuclear Application (1968)	No
G	Piping - ANSI B31.1.0 (1967) Pumps - Manufacturers Standards Valves - ANSI B31.1.0 (1967) and/or ANSI B16.34 Vessel - ASME Section VIII, Division 1	Note 1, 2, 3, 4, *
H	Piping - ANSI B31.1.0 (1967) Pumps - ** Valves - ANSI B31.1.0 (1967) and/or ANSI B16.34 Vessel - **	Note 1, 2, 3, 4, *
J	Section I, ASME Boiler and Pressure Vessel Code	No
K	**	Note 1
L	**	Note 1
M	ANSI B31.5 (1966)	Note 1
N	ANSI B31.5 (1966)	No
Q	Round Duct, Steel, Spiral or Longitudinal Welded Seam, ASTM A211 and SMACNA High Velocity Duct Construction Standards, Second Edition, 1969, Erected to SQN-DC-V-13.8	Yes (Note 5)
R	Round Duct, Steel, Spiral or Longitudinal Locked or Welded Seam, SMACNA High Velocity Duct Construction Standards, Second Edition, 1969 (Sheet Metal and Air Conditioning Contractors National Assoc.)	No

Table 3.2.2-3 (Sheet 2)
(Continued)

Non-Nuclear Safety Classifications

TVA Piping System Class	Code Jurisdiction*	Design For Seismic Loading
S	Rectangular Duct, for Velocities Over 2000 fpm or Static Pressures From 2 to 10 inch Water Gauge, SMACNA High Velocity Duct Construction Standards, Second Edition, 1969, Erected to SQN-DC-V-13.8	Yes (Note 5)
T	Rectangular Duct, for Velocities Over 2000 fpm or Static Pressures From 2 to 10 inch Water Gauge, SMACNA High Velocity Duct Construction Standards, Second Edition, 1969	No
U	Rectangular Duct, for Static Pressures Below 2 inch Water Gauge, SMACNA Low Velocity Duct Construction Standards, Fourth Edition, 1969, Erected to SQN-DC-V-13.8	Yes
V	Rectangular Duct, for Static Pressures Below 2 inch Water Gauge, SMACNA Low Velocity Duct Construction Standards, Fourth Edition, 1969	NO

Table 3.2.2-3 (Sheet 3)
(Continued)

Non-Nuclear Safety Classifications

Notes:

* - Code jurisdiction is applicable to field fabrication, assembly, examination, and testing.

** - Design engineers shall determine the specific code or standard that applies (i.e., NEMA, API, etc.).

1 - All non-nuclear safety piping systems located inside seismic category I structures are seismically supported as necessary to prevent unacceptable interactions with safety-related structures, systems or components (seismic category I (L) A or I (L) B as defined in Section 3.2.2.6 and Design Criteria SQN-DC-V-3.0, -3.2 and 13.3).

The piping class 1 (L) is subdivided as follows:

A. Where the pressure boundary integrity is required, the piping is classified as category 1 (L) A.

B. Where the pressure boundary integrity is not required during and after a seismic event but position retention is required, the piping is classified as category 1(L) B.

2 - For repairs and modifications made after June 15, 1973 the provisions of paragraph 136.4 of the Power Piping Code ASME/ANSI B31.1-1973 may be used for examination of welds (reference B45 861202 252).

3 - Analysis was performed using USAS B31.1.0-1967, supplemented by use of the provisions of Class 2, NC-3600, ASME Section III, 1971 Edition up to and including Winter 1972 Addenda.

4 - For work performed after August 6, 1974, on Class G and Class H, welder/welding operator qualification/requalification may be made per ANSI-B31.1-1973, paragraph 127.5, in accordance with ASME, Section IX-1971, plus Winter 1971 Addenda.

5 - Seismic Category I if it performs a primary safety-function, with the following exception. Safety Class 2b (TVA Class Q) Main Control Room air flow delivery components (round flexible ducting, triangular fiberglass ducting, and air bars) and the suspended ceiling which supports them are qualified to Seismic Category I(L) requirements, analyzed to ensure that the components will remain in place, the physical configuration will be maintained such that flow will not be impeded, and the ducting pressure boundary will not be lost. See Section 3.7.3.16. The air flow delivery components are constructed of standard commercial grade materials. Limited QA requirements ensure they are maintained as qualified.

3.3 WIND AND TORNADO LOADINGS

3.3.1 Wind Loadings

3.3.1.1 Design Wind Velocity

The Category I structures are designed for a 95-mph wind 30 feet above grade with a 100-year period of recurrence.

3.3.1.2 Basis for Wind Velocity Selection

The 95-mph wind was determined from Figure 1(b), ASCE Paper 3269, "Wind Forces on Structures" (see Reference 1). Historical data are presented in Section 2.3.

3.3.1.3 Vertical Velocity Distribution and Gust Factor

The 95-mph wind was applied for the full height of the structure. An approximate gust factor of 1.1 is included for all wind loads and combinations of loads where wind is involved as recommended in ASCE Paper 3269.

3.3.1.4 Determination of Applied Force

The wind loads resulting from the velocity given in Section 3.3.1.3 are determined by the method described in ASCE Paper 3269. The dynamic wind pressure, q, is defined as $q = .00256V^2$, where q is in lb/ft^2 and V is in mph. A gust factor of 1.1 is applied which redefines q as $q = .00256(1.1V)^2 = .00310V^2$. The wind pressure, p, in lb/ft^2, is defined p = Cq where C is the pressure distribution coefficient (C_{pe} or C_{pi}) or the shape coefficient (C_D) determined from Table 4 in ASCE Paper 3269. For boxed shaped structures, the coefficients are slightly modified from the ASCE Paper. The values used are given below:

For the analysis of box-shaped structures, a shape coefficient (C_D) of 1.3 is used which defines the wind pressure as p = 1.3q. Of the total pressure (p = 1.3q), 0.8q is applied to the windward wall, and 0.5q is applied to the leeward wall. Concurrently, the end walls receive 0.7q negative pressure and the roof receives -0.5q uplift.

For the analysis of cylindrical structures, such as the Shield Buildings and Storage Tanks, the shape coefficients and pressure distribution coefficients are obtained from Table 4(f) of ASCE Paper 3269.

3.3.2 Tornado Loadings

3.3.2.1 Applicable Design Parameters

The design tornado is characterized by an "eye" with reduced atmospheric pressure of 3 lb/in^2 below ambient and by a "funnel" having a maximum rotational velocity of 300 mph. The tornado is assumed to have a translational speed of 60 mph. The Category I structures are designed for the effects of the 300-mph rotational wind, the 60-mph translational wind, a

negative differential pressure defined as a trapezoidal step function, its magnitude varies from zero to -3 psi in 3.0 seconds, stays at -3 psi for 3 seconds then decreases to zero in 3.0 seconds, and the tornado-generated missiles described in Section 3.5. These loadings are considered to act concurrently. Coincident wind velocities and pressure drops for the design tornado are shown in Figure 3.3.2-1.

The relationship between wind velocity and pressure in the design tornado shown in Figure 3.3.2-1 was developed based on Hoecker's studies of the Dallas tornado of 1957 (References 2 and 3).

3.3.2.2 Determination of Forces on Structures

The methods used to convert the tornado loadings into forces on Category I structures, including the distribution across the structures, was determined by following the recommendations of ASCE Paper 3269, "Wind Forces on Structures" as outlined in Section 3.3.1.4. The provisions for gust factors and variation of wind velocity with height are not applied. The dynamic wind pressure, q, is defined as $q = .00256V^2$, where q is in lb/ft^2 and V is in mph. The wind pressure, p in lb/ft^2, is defined as $p = Cq$, where C is the shape coefficient (C_D).

A 1.3 shape coefficient is included for box-shaped structures with vertical walls normal to the wind direction. The dynamic pressure load, $p = 1.3q$, due to tornadoes is applied to the structure walls and roof in the same manner as the wind loads in Section 3.3.1.

Cylindrical structures and tanks have the same shape coefficients applied as for wind loads in Section 3.3.1. The pressures are applied over the structures as shown in Table 4(f) of ASCE Paper 3269.

The effect at various combinations of tornado loadings were studied with respect to each Category I structure. The most adverse combination was selected individually for the design basis of each structure.

The tornado loadings are not considered to be coincident with accident or earthquake loadings. Venting is utilized to reduce the effective tornado-generated differential pressure in portions of the Auxiliary Building. Four hundred square feet of relief panel area are provided in the roof over the Spent Fuel Pool Room and Cask Loading Room at Elevation 791.75 for venting purposes during the tornado. The relief panels are held in place by gravity. An upward pressure of 0.25 lb/in^2 is sufficient to offset the weight of the panels and cause them to be lifted from their normal positions. Two corners of each panel are chained to the roof to prevent the panel from becoming a missile after it relieves.

The Shutdown Board Room and, in general, the area between columns q and u at Elevation 734.0 are not part of that portion of the Auxiliary Building intentionally vented for tornado depressurization; however, this area and the remainder of the building will depressurize through the vent area provided by the air intake openings, through ventilation penetrations, and through the 734 foot elevation equipment hatch. In addition, the ERCW Pumping Station depressurizes due to the vent areas provided by the ventilation openings. The Diesel Generator Building depressurizes due to the vent areas provided by the ventilation openings and a Main Control Room manual action to open the Air Intake Dampers during a tornado event.

Analyses indicate that the effective tornado-generated pressure differential will not exceed 100 lb/ft^2 acting on the roof and exterior walls of the Spent Fuel Pool Room and cask loading area. The roof is the limiting structural element in this condition and is designed to withstand an upward-acting pressure of 180 lb/ft^2. Air velocity induced by venting is expected to be high at the vent opening, but decrease rapidly within a few feet of the opening. No hazard to equipment is foreseen since the vents are located in the Auxiliary Building roof, well away from any essential equipment.

Pressure differentials and assorted air velocities are expected in all areas which depressurize due to the venting of the building. Structures in these areas have been evaluated for the differential pressure from depressurization. In the room(s) where the differential pressure exceeds the wall design, administrative operating instructions will ensure that the doors will remain open during a tornado event to reduce the differential pressure to an acceptable value. No hazard to equipment in these areas is foreseen due to the small pressure differential and low air velocities. Walls, ceilings, and floors separating areas experiencing depressurization during a tornado from areas not experiencing depressurization are designed to withstand the effects of total tornado-generated pressure differential of 3 lb/in^2. The analytical model employed in determining the effective differential pressures utilizes isentropic, perfect gas relations in a step-wise, quasi-steady first law analysis. The analysis determined pressure and temperature variations within the structure induced by the tornado defined in Section 3.3.2.1.

3.3.2.3 Ability of Category I Structures to Perform Despite Failure of Structures Not Designed for Tornado Loads

An investigation of the effect of tornado loading on the Turbine Building was made to determine the extent of failure of the structure as to collapse or to the possibility of generating missiles that could damage Category I structures and impair their ability to perform their intended design function.

The following information was determined:

1. The metal siding panels will fail at loads considerably below the design tornado loading and will become missiles that could impact the Control Building. The siding will fail before the main girts are overloaded enough to cause failure. The failure of the parapet girts is likely, resulting in the release of 16WF15.5 in 4-foot lengths, 8WF11.5 in 8-foot lengths, 18 by 3/8 plate in varying lengths, ST4WF8.5 in 7-foot lengths. The walls and roof of the Control Building were investigated for the above missiles and found to be adequately designed to resist the missiles.

2. Following the failure of the siding, the structural steel framing of the building will be exposed to tornado forces acting upon the steel structure, equipment, piping, and other items of wind resistance. At the maximum design tornado winds, the structure will have some points of local yielding in connections as forces are redistributed throughout the bracing and rigid frames. The resistance of the structure at this point will be sufficient to prevent collapse onto the Control Building.

3. The Turbine Room cranes, if not anchored, could possibly be blown from the crane girders, either falling on the operating floor or out the end of the building onto the Control Building roof.

   To preclude the occurrence of this event, the cranes will be anchored to stops at one end of the runway at any time during tornado alerts, watches, and tornadoes.

4. The Potable Water Tanks and Gland Seal Water Tanks at Elevation 773 floor could be blown to the Control Building roof along with air intake hoods, auxiliary boiler stack, and heating and vent equipment on the Elevation 773 floor.

   The Control Building roof was determined to be adequately designed to resist the described events.

3.3.3 References

1. "Wind Forces on Structures," Final Report, Task Committee on Wind Forces, Committee on Loads and Stresses, Structural Division, Transactions, American Society of Civil Engineers Publication, Number 3269, Volume 126, Part II (1961).

2. Hoecker, W. H., "Wind Speed and Air Flow Patterns in the Dallas Tornado and Some Resultant Implications," Monthly Weather Review, May 1960.

3. Hoecker, W. H., "Three Dimensional Pressure Pattern of the Dallas Tornado and Some Resultant Implications," Monthly Weather Review, December 1961.

Best Available Historical Image

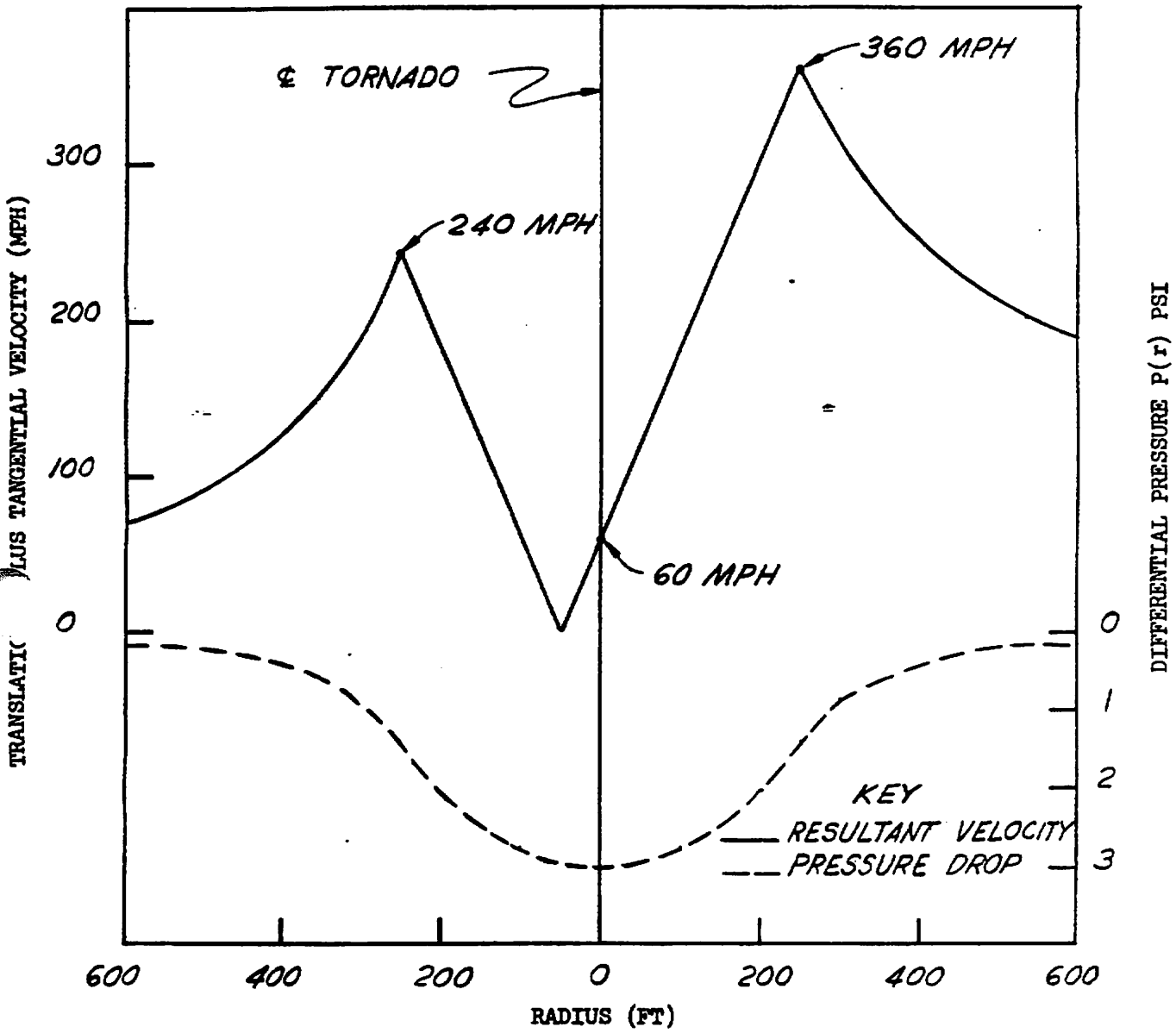

Figure 3.3.2-1 Variations of Differential Pressure and Tangential plus Translational Velocity as a Function of the Distance from the Center of the Tornado

3.4 WATER LEVEL (FLOOD) DESIGN

3.4.1 Flood Elevations

The maximum site flood elevations are discussed in Section 2.4 and Appendix 2.4A. The specific elevations used in the design of the Category I structures are described in Section 3.8.

3.4.2 Flood Force Application

The dynamic loads of the wind waves were determined and applied to the appropriate Category I structures using the methods outlined in the U.S. Army Coastal Engineering Research Center Technical Report No. 4, "Shore Protection, Planning, and Design," Third Edition, 1966.

3.4.3 Flood Protection

The flood protection requirements for Category I systems and components are described in section 2.4.

3.5 MISSILE PROTECTION

Category I structures and components have been analyzed and designed to be protected against a wide spectrum of credible missiles. Failure of certain rotating or pressurized components or equipment is credible and will presumably lead to generation of missiles. In addition, noncredible missiles are identified and justification given for them not being a credible source of missiles. Tornado-generated missiles and missiles resulting from activities particular to the site are also discussed in this section. Characteristics of all credible missiles are discussed in detail, and their effect on the performance of vital components and systems is evaluated. It is shown that the missile protection criteria to which the plant has been analyzed and protected against, comply with the intent of Criterion 4 of 10 CFR 50, Appendix A, General Design Criteria for Nuclear Power Plants.

The design bases of the plant are listed below. These are followed by a presentation of missile barrier loadings, missile selection, selected missiles, barrier design procedures, and missile barrier features.

Design Basis 1

1. Protection shall be provided against potential missiles that could cause a LOCA.

2. Protection shall be provided against potential missiles that could result in the loss of ability to control the consequences of a LOCA, including both the necessity for core cooling and for retention of containment integrity.

3. Protection shall be provided against potential missiles that could jeopardize functions necessary to bring the reactor to a safe shutdown condition during normal or abnormal conditions.

The relationship that missiles have to single failure criteria is:

Design Basis 2

1. A missile that may be generated from the Reactor Coolant System, coincident with a LOCA, shall be considered a part of the LOCA for single failure assumption purposes.

2. If a missile is generated and causes failure of an adjacent system, then that is considered to be a single failure for which the adjacent system must be designed. No other simultaneous or subsequent failures of the adjacent system shall be assumed for design purposes.

Protection against a potential missile may be provided by, but not necessarily be limited to, any one or combination of the following protection methods:

Design Basis 3

1. Compartmentalization - Enclosure of missile source or equipment requiring protection in compartments whose walls prevent penetration by the missile.

2. Barriers - Erection of missile barriers either at the missile source or at the equipment to be protected.

3. Separation - Sufficient separation of redundant systems or complete train separation of components in a safety network so that a potential missile cannot damage both redundant trains of the system and prevent safe shutdown of the reactor.

4. Distance - Location of equipment beyond the range of a potential missile.

5. Restraints - Securing potential missiles by means of restraints.

6. Strategic orientation - Facing equipment and components of equipment in a direction that will direct the potential missile away from equipment.

7. Equipment design - Design equipment to withstand impact of potential missile without loss of function.

The above gives methods to provide protection against postulated missiles; however, a very basic premise for protection is to design components and equipment so that they will have a low potential for generation of missiles. In general, the design that results in reduction of missile generation potential promotes the long life and usability of a component, and is well within permissible limits of accepted codes and standards. The following general methods are used in the design, manufacture, and inspection of equipment:

Design Basis 4

1. Equipment and sections of piping with potential for over pressurization will be provided with ASME Section III Code acceptable pressure relief valves. These valves will prevent pressure buildup in equipment or piping sections beyond the design limits of the materials involved.

2. All components and equipment of the various systems will be designed and built to the standard established by the ASME or other equivalent industrial standard. A stringent Quality Control Program will be also enforced during manufacture, testing, and installation.

3. Volumetric and ultrasonic testing where required by code, coupled with periodic inservice inspections of materials used in components and equipment, adds further assurance that any material flaws that could permit the generation of missiles will be detected.

Postulated missiles will be analyzed to disclose those against which protection should be provided. The analyses will be based on the examination of components and equipment of

energy sources that could be converted to kinetic energy of the potential missile. The following energies shall be considered:

Design Basis 5

1. Stored strain energy - Associated with nuts, bolts, and studs.

2. Contained fluid energy - Associated with equipment and components that contain fluids under pressure.

3. Rotational energy - Associated with equipment such as the reactor coolant pump motor flywheel. (Consideration for the reactor coolant pump motor flywheel is given in Subsection 5.2.6.)

A postulated missile may be disqualified from further consideration if any of the following design conditions are met:

Design Basis 6

1. Sufficient distance exists between the postulated missile and the equipment and components so that damage would not result in conditions 1, 2, or 3 of Design Basis 1. Sufficient distance is defined as a distance that, if traveled by the missile, will render it incapable of causing these conditions.

2. Barriers inherent to the plant design can be identified and associated with potential missiles so that, because of the barrier, the postulated missile is rendered incapable of causing conditions 1, 2, or 3 of the Design Basis 1. A valid barrier in this case is defined as a structure that is capable of absorbing the effect of the missile impact and not resulting in any of these conditions.

3. Enclosure of a postulated missile source can be identified and associated with the missile so that the walls of the enclosure can absorb the effects and prevent damages by the missile without causing any of conditions 1, 2, or 3 of Design Basis 1.

4. Restraints inherent to plant design can be identified and associated with a postulated missile so that, because of the restraint, the missile is incapable of being generated.

5. A postulated missile source associated with components and equipment that is oriented as a result of inherent plant design so that the path of the missile is away from equipment to be protected. The path of the missile must be directed into an area so that conditions 1, 2, or 3 of Design Basis 1 will not occur if the potential missile is generated.

6. Equipment or components that are specifically designed against generation of missiles, or that are specifically designed to be capable of withstanding missile impact without resulting in the occurrence of conditions 1, 2, or 3 of Design Basis 1.

3.5.1 Missile Barrier and Loadings

A tabulation of the structures, shields, systems, and barriers that have been designed for missile protection is presented in Table 3.5.1-1 along with the types of missiles they will be protected against.

3.5.2 Missile Selection

The specific missiles which each system, structure, shield, or barrier listed in Table 3.5.1-1 are protected against are discussed in this section along with the basis for selection as a credible missile. In addition, certain components are justified as not being credible missiles.

3.5.2.1 Control Rod Drive Mechanism

The control rod drive mechanism is a source of three types of missiles: the housing plug, drive shaft, and drive shaft latched to the drive mechanism. It is postulated that the top plug on the control rod drive mechanism will become loose and be forced upward by the water pressure. Then the following sequence of events is assumed: The drive shaft and control rod cluster would be forced out of the core by the differential pressure across the drive shaft. The drive shaft and control rod cluster, latched together, are assumed fully inserted when the accident starts. After approximately 12 feet of travel, the rod cluster control spider would hit the underside of the upper support plate. Upon impact, the flexure arms in the coupling joining the drive shaft and control cluster would fracture, completely freeing the drive shaft from the control rod cluster. The control rod cluster would be completely stopped by the upper support plate; however, the drive shaft would continue to be accelerated upward, leave the reactor vessel, and hit the missile shield structure.

The missile characteristics of the control rod drive mechanism housing plug missile are given in Table 3.5.2-1. The velocity of the plug has been calculated by equating the increase of the plug momentum to the decrease in water momentum. The reactor coolant discharge rate from the break has been calculated using the Burnell equation (Reference 1). The coolant pressure has been assumed constant at the initial value. No spreading of the water jet has been assumed. The missile characteristics of the drive shaft (with the disconnect rod) latched to the drive mechanism are also given in Table 3.5.2-1.

3.5.2.2 Valves

Valves are not considered credible sources of missiles. Each valve inside the crane wall has been reviewed to determine if the bonnet or stem could potentially become a missile. For further discussion on valves, see Paragraph 3.5.2.18.

3.5.2.3 Temperature and Pressure Sensing Assemblies

Potential sources of jet-propelled missiles from the Reactor Coolant System are the temperature and pressure-sensing assemblies attached to the Reactor Coolant Loop, the temperature-sensing assemblies attached to the Reactor Coolant Pumps and instrumentation assemblies attached to the pressurizer. These sources are not considered as credible missiles.

3.5.2.4 Pressurizer Heaters

Pressurizer heaters are not considered as credible missiles.

3.5.2.5 Electrical Cables

Electrical cables inside buildings are not protected against damage from internal missiles. However, separation and redundancy of vital cables are such that any single failure within the protection system will not prevent proper protective action at the system level when required.

Electrical cables in Category I structures are protected from tornado missiles. This includes cables in yard manholes, handholes, and underground conduit banks which connect to the Diesel Generator Building, Essential Raw Cooling Water Pumping Station, and Condenser Cooling Water Pumping Station.

3.5.2.6 Steel Containment Structure

Any credible missile generated within the containment structure will not impair the integrity of the steel containment structure. Protection against credible missiles located in the lower compartment is accomplished by locating a steel-reinforced concrete wall (crane wall), a steel-reinforced concrete slab (divider deck), and steel-reinforced concrete removable blocks (control rod drive mechanism missile shield), between the Primary Reactor Coolant System and the containment structure. Additionally, since there are openings in the crane wall, protection for the containment structure is also accomplished by orienting potential missiles, especially valve components, so that their anticipated trajectory will not permit them to pass through these openings.

Some components are located in the space between the crane wall and the containment structure. Protection is accomplished by orienting potential missiles so that their anticipated trajectories are away from the containment structure.

Even though the preceding methods have been used to protect the containment structure from potential internal missiles, the basic approach has been to assure design adequacy against generation of missiles rather than to allow a missile to be generated and then try to contain the effects.

The control rod drive mechanism missile shield will be located above the reactor vessel and will prevent the credible missiles of the Control Rod Drive System from striking the inside surface of the containment structure or the containment spray headers.

Valve bonnets and stems inside the steel containment structure, should they become missiles, would not cause failure of the containment shell or vital systems inside the containment shell.

3.5.2.7 Shield Building

None of the missiles generated within the containment will penetrate the containment structure. Therefore, it is not necessary to design the Shield Building against these missiles. There are, however, a number of missiles external to the reactor containment that the Shield Building must be designed against.

Source of missiles outside the reactor containment include:

1. A portion of a disc or casing fragments of a main turbine.

2. Credible tornado-generated missiles which are identified in Table 3.5.5-2.

The small air exhaust opening at the top of the shield building will be protected from vertically descending tornado missile of one inch diam. x 3 feet long "steel rod."

The integrity of the Shield Building will not be impaired by tornado-generated missiles. This is accomplished by designing the Shield Building of steel-reinforced concrete to be capable of withstanding the impact of tornado-generated missiles. Additionally, this means that the Shield Building protects the steel containment structure from tornado-generated missiles. The probability of a credible missile from the main turbine hitting the Shield Building and producing unacceptable damage to safety related equipment is so low that it is considered as incredible (Subsection 10.2.3).

3.5.2.8 Ice Condenser Containment System

External and internal missiles are not of significance for the Ice Condenser Containment System. Tornado-generated missiles will be intercepted by the Shield Building, and the trajectory of missiles generated within the bottom region of the lower compartment is such that the missiles will not pass through the inlet door openings in the lower crane wall and directly strike the steel containment structure. The latter situation is shown in Figure 3.5.2-1. As can be seen in the figure, the location of main portions of the Reactor Coolant System and of the other systems which connect to it are below elevation 695.0, whereas the openings for the ice condenser lower inlet doors are between elevations 723'-5" and 730'-8".

3.5.2.9 Emergency Core Cooling System

The Emergency Core Cooling System (Subsection 6.3) includes four accumulator tanks which are located in separate rooms between the crane wall and the containment structure. The crane wall protects these tanks and their associated valves and piping from credible missiles generated within the lower compartment, and the Shield Building protects them from external missiles. The active components of the system (pumps, motors, and heat exchangers) are located in separate rooms in the Auxiliary Building. Therefore, these active components are protected from missiles generated within the lower compartment. Further, these vital components are protected from tornado-generated missiles by the Auxiliary Building and the two floors of steel-reinforced concrete above them. There is an adequate supply of borated water protected against tornado missiles to provide makeup to the Primary System required for a safe shutdown of the plant.

The accumulator tanks and associated check valves and piping are not credible sources of missiles for the containment structure. Components are prevented from becoming a source of damaging missiles by orienting potential missiles so that their anticipated trajectory is away from the containment structure.

3.5.2.10 Containment Spray System

For the Containment Spray System (Subsection 6.2.2), the spray nozzles and piping in the upper compartment of the containment structure are protected from missiles generated in the lower compartment by the steel-reinforced concrete divider deck and missile shield, and by the steel-reinforced concrete walls of the upper portions of the steam generators and pressurizer. No credible missiles will be generated inside the upper compartment of the containment structure. Protection from tornado-generated missiles is provided by the Shield Building. The pumps and motors of the Containment Spray System are located in separate rooms in the Auxiliary Building. These components are therefore protected from missiles generated in the lower reactor compartment. They are also protected from tornado-generated missiles by at least two floors of steel-reinforced concrete of the Auxiliary Building.

3.5.2.11 Containment Isolation System

Isolation valves of the Containment Isolation System (Subsection 6.2.4) are located in three regions: (1) inside the containment structure, (2) between the containment structure and the Shield Building, and (3) outside the Shield Building.

The isolation valves which are located inside the containment structure are protected from credible missiles generated in the lower compartment by the crane wall, and protected from tornado-generated missiles by the Shield Building.

Similarly, isolation valves which are located in the annular region between the containment structure and the Shield Building are protected by the crane wall and by the Shield Building.

There are no credible sources of missiles in the annular region.

For containment isolation valves located outside the Shield Building (in the main steam and main feedwater lines) protection is provided by the West Steam Valve Room (for those lines which penetrate the containment and Shield Buildings near azimuth 0°), and by the separate structure, called the East Steam Valve Room, adjacent to the Shield Building (for those lines which penetrate near azimuth 180°). The general arrangements for these lines are shown in Figures 3.5.2-2 and 3.5.2-3, respectively.

As can be seen in Figure 3.5.2-2, the isolation valves in the lines penetrating near azimuth 0° are near the bottom of the West Steam Valve Room and are thereby protected from tornado-generated missiles of other than vertical descent by the floors and walls of the Auxiliary Building. See Section 3.5.5 for further discussion.

Also, as seen in Figure 3.5.2-3, the isolation valves in the East Steam Valve Room are near the bottom of the room. The exterior walls of this structure have been designed to withstand the spectrum of credible tornado-generated missiles. In addition, the vent near ground level has an offset to prevent missiles on a straight line trajectory from passing through the vent. See Section 3.5.5 for further discussion.

3.5.2.12 Diesel Generator Building

Four emergency diesel generators, which are required to supply emergency power to certain engineered safety features, are located inside a separate structure, the Diesel Generator Building. Interior walls of reinforced concrete separate these generators. The exterior walls, roofs, and doors of this building will not fail as a result of a tornado and provide protection against the missiles in Tables 3.5.5-2 and 3.5.5-5. The tornado missile criteria are discussed in greater detail in Subsection 3.5.5.

The fuel oil vent piping protruding from the east wall of the Diesel Generator Building at Elevation 734.5 feet and through the roof of the Diesel Generator Building near the east wall is provided with protection against tornado generated missiles. The tornado missile barriers are designed to provide adequate protection against all applicable missiles described in Subsection 3.5.5.

3.5.2.13 Control Bay

The control bay is protected against tornado-generated missiles by the steel-reinforced concrete ceilings and walls of the Control Building. Credible missiles generated in other portions of the plant are intercepted by the crane wall, containment structure, or steel-reinforced concrete walls and floors of the Auxiliary Building. The orientation of the Control Building with respect to the axis of rotation of the main turbines is such that it is a very low probability that a failed portion of a turbine disc would cause fragments that would strike the Control Building. The exterior walls have been designed to withstand the spectrum of credible tornado-generated missiles. There are no credible internal missiles generated within the control bay.

3.5.2.14 Spent Fuel Pool

The spent fuel pit (Subsection 9.1.2), is located in the Auxiliary Building. In addition, up to 225 spent fuel assemblies may be stored in a rack to be fabricated in the future for placement in the cask loading area of the cask pit adjacent to the spent fuel pool. Protection against missiles from other portions of the plant is provided by at least one wall of steel-reinforced concrete walls or slabs. Protection against tornado-generated missiles is provided by the Auxiliary Building and by its location between the two Shield Buildings. The tornado missile criteria are discussed in greater detail in Subsection 3.5.5.

An analysis, which included probability of a turbine disc failure and impact probability as a function of angular orientation with turbine axis of rotation, has shown that the probability of a turbine missile hitting the spent fuel pit is sufficiently low.

3.5.2.15 The Auxiliary Building

The Auxiliary Building is designed against damages by tornado-driven missiles. This capability is provided by the walls and roof being constructed of steel-reinforced concrete. Damage of vital systems by internally generated missiles is negated by reinforced walls and floors in the building. The spent fuel pool is discussed in Subsection 3.5.2.14. Any openings in the roof of the auxiliary building through which tornado borne missile (of one inch diameter steel bar x 3 feet long in size) can penetrate and disable vital safety gear are reinforced via covering or grating to stop these missiles.

3.5.2.16 The Control Building

The Control Building walls and roof are made of steel-reinforced concrete to protect against tornado-driven missiles. The control bay is covered in Subsection 3.5.2.13.

3.5.2.17 Intake Structure

The essential raw cooling water pumps (Subsection 9.2.2) are located at the ERCW pumping station and are exposed to the atmosphere. The pumps are designed to withstand the wind forces induced by a tornado. In addition, protection against tornado-generated missiles is provided by a structural steel grillwork system composed of 21 x 49 wide - flange beams spanning across the roof and over the pumps. A turbine missile analysis described in Subsection 10.2.3 showed that the probability of damaging vital equipment is acceptably low. However, this analysis was performed for ERCW pumps located in the CCW pumping station rather than in the current ERCW pumping station. Since the ERCW pumping station is located much further away than the CCW pumping station, the probability of damaging vital equipment is even lower than before.

3.5.2.18 Components Not Credible Sources of Missiles Inside Containment

Catastrophic failure of the reactor vessel, steam generators, pressurizer, reactor coolant pump casing, reactor coolant pump flywheel (Subsection 5.2.6), accumulators, heat exchangers, and piping leading to generation of missiles is not postulated. Massive and rapid failure of these components is not credible because of the material characteristics; inspection; quality control during fabrication, erection, and operation; conservative design; and prudent operation as applied to the particular component.

Gross failure of a control rod mechanism housing sufficient to allow a control rod to be rapidly ejected from the core is not considered credible for the following reasons:

1. All full-length control rod mechanisms are shop tested at 4105 lb/in^{2}g, respectively.

2. The mechanism housings are individually hydrotested to 3107 lb/in^{2}g as they are installed on the reactor vessel to the head adapters and checked during the hydrotest of the completed Reactor Coolant System.

3. Stress levels in the mechanism are not affected by system transients at power or by thermal movement of the coolant loops.

4. The mechanism housings are made of type 304 stainless steel. This material exhibits excellent fracture notch toughness at all temperatures that will be encountered.

For all valves not addressed in Paragraph 3.5.2.2, the stems are not considered to be a credible source of missiles. All the isolation valves in the Reactor Coolant System have stems with a back seat. This effectively eliminates the possibility of ejecting valve stems even if the stem threads fail. Analysis shows that the back seat or the upset end would not penetrate the bonnet. Additional interference is encountered with air and motor-operated valves.

Valves with nominal diameter larger than 2 inches have been designed against bonnet body connection failure and subsequent bonnet ejection by means of:

1. Using the design practice of ASME Section VIII (1968), which limits the allowable stress of bolting material to a conservative or low value.

2. Using the design practice of ASME Section VIII (1968), for flange design.

3. By controlling the load during the bonnet body connection stud-tightening process.

The pressure containing parts of these valves are designed per Code Class I Requirements established by the ANSI B16.5 (1968).

The proper procedures and the use of calibrated torque wrenches, with indication of the applied torque, limit the prestress of the studs to the allowable limits established in the ASME Code. This stress level is far below the material yield. The complete valves are hydrotested per the ANSI B16.5 (1968). The stainless steel bodies and bonnets are volumetrically and surface tested to verify soundness.

Valves with nominal diameter of 2 inches, or smaller, are forged and have screwed bonnet with canopy seal. The canopy seal is the pressure boundary while the bonnet threads are designed to withstand the hydrostatic end force. The pressure-containing parts are designed per criteria established by the ANSI B16.5 (1968) specification.

3.5.2.19 Missiles From Main Turbine

Turbine missiles are discussed in detail in Subsection 10.2.3.

3.5.2.20 Nearby Site Activity Generated Missiles

There are no credible sources of nearby site activity generated missiles. There are no airports located within 5 miles of the plant site. No relocation of existing airports into this area or development of new airports is planned in the foreseeable future, according to the Tennessee Aeronautics Commission.

There is no potential for damage to the Sequoyah Plant because of the transportation of explosives to or from the Volunteer Army Ammunition (VAA) plant 8 miles away.

3.5.2.21 Tornado-Generated Missiles

The design of barriers for tornado-generated missiles is discussed in Subsection 3.5.5. The missile spectra for which the various Category I structures are qualified are presented in Tables 3.5.5-2, 3.5.5-4, and 3.5.5-5.

3.5.2.22 Condensate Storage Tanks

The FLEX credited water volume contained in the Condensate Storage Tanks (CSTs) is protected by a tornado wind driven missile barrier constructed around the tanks. The barrier protects the tanks from failure that would cause a loss of contents exceeding the turbine-driven auxiliary feedwater pump suction requirements for the duration of the beyond design basis external event. The missile spectrum for which the protection was designed is presented in Table 3.5.5-2. The protection is provided by a specially designed steel-reinforced concrete barrier wall. A missile trajectory above the wall via which a tornado borne missile could penetrate the tank is above the minimum required water level of the CSTs. Because it is denser than water, a missile that penetrates above the water level will sink to the bottom of the tank and not interfere with, or enter, the suction piping.

3.5.3 Selected Missiles

This subsection determines the missile threat for credible missiles that were presented in subsection 3.5.2.

Missiles are generally characterized by size, weight, origin, impact area, velocity, and impact energy. Missiles may also be classified by the potential energy source which served as the driving force: stored strain energy, contained fluid energy (jet-propelled and piston-type missile), and rotational energy. A list of missiles and important parameters is given in Table 3.5.2-1.

The analytical techniques used for each missile classification will be described by listing the basic equations used for analyzing the missiles under each classification.

The approach is to assume that a worst-case missile is generated and to directly analyze the missile velocity. Once the velocity has been conservatively calculated, the missile's energy can be estimated and the potential effects can be assessed.

1. Class I missiles - Resulting from stored strain energy

   a. The equation for velocity:

$$V = \sqrt{gE/W}\ \varepsilon \quad or\ V = \sqrt{g/(EW)}\ \sigma$$

where V = velocity of missile, ft/s

ε = strain, in./in.

σ = ultimate tensile stress, lbf/ft^2

E = modulus of elasticity, lbf/ft^2

g = gravity constant, (lbm-ft)/(lbf-sec^2) = 32.2

W = mass density of projectile, lbm/ft^3

b. The equation for kinetic energy:

$$KE = mV^2/2$$

These equations provide a conservative analysis of missile energy because (1) the ultimate tensile stress (σ ult) or strain (ε ult) for the material is used, resulting in a larger amount of energy than would actually be present at fracture, and (2) all strain energy is converted to kinetic energy with no consideration for energy losses due to friction, relaxation, heating of the material, or air resistance.

2. Class II missiles - Resulting from contained fluid energy, piston-type missiles

a. Equation for velocity:

$$V = \sqrt{2PA_oL/m}$$

where V = velocity of missile at end of piston stroke, ft/s

P = system pressure, lb/ft^2

A_o= missile area under pressure, ft^2

L = length of stroke, ft

m = mass of missile, lbf-s^2/ft

b. Equation for kinetic energy:

$$KE = mV^2/2$$

The equations provide a conservative analysis of the missile energy since no consideration is given for energy losses due to friction or air resistance.

3. Class III missiles - Resulting from contained fluid energy, jet-propelled missiles

a. Equation for velocity:

$$\left(1 - \frac{V}{V_f}\right) - ln\left(1 - \frac{V}{V_f}\right) = K_1 - \frac{K_2}{r_o + x tan\beta}$$

$$where\ K_1 = \left(1 - \frac{V_o}{V_f}\right) - ln\left(1 - \frac{V_o}{V_f}\right) + \frac{K_2}{r_0}$$

$$K_2 = \frac{A_o \ A_m \ e_f}{M\pi \ (\tan\beta)}$$

V = missile velocity at distance x, ft/s

V_f = jet velocity, ft/s

r_o = radius of throat, ft

x = distance traveled, ft

ß = angle of jet expansion, degrees from normal

V_o = initial velocity of missile, ft/s

e_f = density of fluid jet, lbf-s^2/ft^4

A_o = missile area under pressure, throat area, ft^2

A_m = cross-sectional area of missile, ft^2

M = mass of missile, lbf-s^2/ft

b. Equation for kinetic energy:

$$KE = mV^2/2$$

These equations provide a conservative estimate of the missile energy since no consideration is given for energy losses due to friction or air resistance.

4. Class IV missiles - Resulting from rotational energy

The reactor coolant pump flywheel is not a credible missile source (Subsection 5.2.6) and does not have to be protected against. Turbine disc failure is discussed in Subsection 10.2.3. The probability of a disc damaging a vital system is extremely small.

3.5.4 Barrier Design Procedures

Penetration into Concrete Barriers

The following paragraph is provided for historical purposes: In computing penetration into concrete walls, a comparison was made of formulas listed in ORNL-NSIC-22, "Missile Generation and Protection in Light-Water-Cooled Power Reactor Plants." Four equations were studied in ORNL-NSIC-22 in connection with penetration in concrete. Two of these, the Army Corps of Engineers formula and the National Defense Research Committee formula, do not apply for

impact velocities under 500 ft/s and thus are not applicable here (velocity of 300 mph = 440 ft/s). The remaining two equations are the Modified Petry Formula and the Ballistic Research Laboratory formula. These two formulas were compared for a 6-inch-diameter missile of 100 pounds and a 16-inch-diameter missile of 2500 pounds with velocities in the range from 0 to 500 ft/s. As seen in Figures 3.5.4-1 and 3.5.4-2, the Petry Formula is the most conservative for velocities greater than 150 to 200 mph for material constant, K=4.76 X 10^{-3}.

The following describes the barrier design procedures utilized for concrete barriers. The depth to which a missile penetrated a concrete barrier was estimated by use of the Modified Petry Formula (Reference 2).

$$D' = KAV' \left[1 + e^{-4(a-2)} \right]$$

where D' = depth of penetration into finite medium

K = a material constant

$$V' = \log_{10} \left(1 + \frac{V^2}{215{,}000}\right)$$

V = impact velocity

A = weight of missile/impact area of missile

$$a = \frac{T}{KAV'}$$

T = wall thickness

The results are given in Figures 3.5.4-3 and 3.5.4-4 for missiles 1, 2, and 4 of the original spectrum of missiles of Table 3.5.5-1. The penetration of the automobile (missile 3 of Table 3.5.5-1) into a 18-inch concrete wall is negligible. According to C. V. Moore (Reference 3), spalling on the inside face of a wall does not occur for penetrations less than two-thirds the wall thickness. Therefore, the structural barrier thickness was always at least 1.5 times the penetration depth. Penetration analysis using Modified Petry formula assumes nondeformable missiles for conservatism.

Penetration into Steel Barriers

The credible missiles inside the containment as defined in Table 3.5.2-1 have been investigated to determine their penetration characteristics. Penetration depths, or minimum thicknesses to

just perforate, have been calculated based upon three commonly used equations for steel targets. They are:

1. The Stanford Equation.
2. The Ballistics Research Laboratory Equation.
3. The Recht and Ipson Equation.

The minimum thicknesses to just perforate a plate having the characteristics of SA516-GR60 carbon steel represent the largest values obtained from the above three equations. The worst case involves a penetration depth that is 45 percent of the actual containment thickness. Therefore, it is concluded that none of the credible missiles pose a threat to the integrity of the containment.

Missile Impact Loads and Structural Responses

The following describes the methods by which missile impact loads were calculated for the tornado missiles of Table 3.5.5-1. Subsection 3.5.5 discusses the modification of the tornado missile design basis following NRC review action in 1975-1976.

Missile impact loads, where required, were calculated based upon several applicable techniques. Impact loads for all missiles of Table 3.5.5-1, except the 4000-pound automobile at 50 mph, were determined by the relationships presented in Reference 7.

The Sequoyah Shield Building and Auxiliary Control Building were designed to resist a 4000-pound automobile impacting at a velocity of 73.3 ft/s (50 mph), at any point up to 25 feet above the ground surface. The time history of the impact force was determined from deceleration-time curves obtained from full-scale tests of automobiles impacting flat (vertical) rigid barriers. The tests were sponsored by the U.S. Department of Transportation, National Highway Safety Bureau (References 4 and 5). The force-time history of the impact is given by the product of the mass of the automobile and the deceleration.

To determine the maximum possible force to be used in the design, the stiffness and effective mass of the impacted structure at the point of impact must be considered. This was accomplished by using the "shock spectrum method" described as follows. First, a shock spectrum was determined by calculating the maximum responses of a family of single degree of freedom (lumped mass) models to the force-time history of the impact as a function of frequency or natural period. Next, the impact surface was modeled as a single degree of freedom system with a stiffness corresponding to the stiffness of the structure at the point of impact. The stiffness of the Shield Building was determined from the paper "Stresses from Radial Loads on Cylindrical Pressure Vessels," by P. P. Bijlaard (Reference 6). The stiffness of a point on the side of the Auxiliary Control Building was determined using classical plate theory. The effective mass was determined in accordance with the recommendations of Reference 7.

The mass and stiffness properties are used to calculate the natural frequency of the system. Having determined the natural period of the single degree of freedom model of the impacted

structure, the corresponding dynamic amplification factor (DLF) was determined from the shock spectra. The pseudostatic impact load was determined by multiplying the peak dynamic impact load by the DLF.

Values obtained from this technique have been corraborated with subsequent reports by the National Highway Safety Bureau. In Reference 5, time histories of forces are presented for several automobile crash tests which are closely confirmatory. The pseudostatic impact loads obtained by the previously described methods were then applied to the structures. The structures were analyzed for the effect of the loads by conventional linear elastic methods.

The structural steel grillage roof system for the ERCW Pumping Station was designed for impact from the tornado missiles listed in FSAR Table 3.5.5-4. The EPRI testing results (Reference 8) were used to determine the possible maximum impact force for the steel grillage roof system. The force-time history of the end impact loading was further refined to account for the stiffness of the missile and the target. The impulse-momentum principle (Reference 9) was used to analyze the midspan and end impacts. For the midspan impact, the response of the elastic-plastic single-degree system was considered along with a maximum ductility ratio of $\mu = 20$ for bending deformation (Reference 11). For end impact, the connection deformation (Reference 12) was also included in the calculation of the resistance of the elastic-plastic system and the maximum ductility ratio of $\mu = 5$ for shear deformation (Reference 10) was used.

Separation and Orientation Procedures

None of the credible missiles described in Subsection 3.5.2, internal or external, will impair the capability of the engineered safety features to shut down the reactor or to maintain the reactor in a safe shutdown mode indefinitely. For portions of the engineered safety features located within the containment structure, protection against missiles generated inside containment is accomplished with the basic approach of assuring design adequacy against generation of credible missiles rather than to allow missile formation and try to contain the subsequent effects. Further, valves are oriented so that the trajectory of missiles will not likely pass through openings in the crane wall; and the valve bonnets and stems will not penetrate the containment shell should they strike it. For these same engineered safety features, protection against tornado-generated missiles is provided by the Shield Building. If one of the pressurizer heaters in the bottom of the pressurizer should become loose and become a jet-propelled missile, it would move downward and strike the floor beneath the pressurizer without jeopardizing the capability to bring the reactor to a safe shutdown.

For those portions of the engineered safety features required for shutdown of the reactor and/or indefinite maintenance of the reactor in the safe shutdown mode located outside the Shield Building, protection is provided against tornado-generated missiles. Protection is provided by locating these features within structures which have been designed to withstand damage by the appropriate spectrum of credible tornado-generated missiles.

It is concluded that the plant complies with the intent of Criterion 4 of the 10 CFR 50, Appendix A.

3.5.5 Missile Barrier Features

Engineering drawings showing the layout and principal design features of all major structures are given in Section 1.2.

General

The original Category I structures at Sequoyah were designed to resist the spectrum of four missiles shown in Table 3.5.5-1. This spectrum was approved for use at Sequoyah by the Atomic Energy Commission prior to the issuance of a construction permit. In 1975-1976, the NRC requested an assessment of the degree of comparability of protection against tornado missiles provided by the original spectrum with that provided by designs then under review. The comparison was performed for two missiles; a 1-inch diameter steel rod and a utility pole. As a result of that review, the original structures were shown to have sufficient thickness to resist penetration and backface spalling for these missiles. Table 3.5.5-2 shows the original design (A1-A4) and evaluation (A5 and A6) missiles for the original structures. The review of the Diesel Generator Building doors led to a requirement that the missiles used for the design of the building (Table 3.5.5-1, except the auto) are to be imposed on the doors in addition to the three original missiles (D1, D2, and D3) used for the doors. This change is shown in Table 3.5.5-5 as missiles D4, D5, and D6. Since the ERCW Pumping Station was an addition, the design is more representative of SRP requirements. It is designed to resist the missile spectrum of Tables 3.5.5-4.

Listed below are the approximate velocities below which perforation or the generation of secondary missiles due to spalling of the concrete are not calculated to occur for the two missiles identified. The velocities were calculated on the basis of penetration depths predicted by the Modified Petry Method. A k-factor of 2.82×10^{-3} ft^3/lb, obtained from the original paper by Amirikian (Reference 2), was used. The Modified Petry Method is discussed further in Section 3.5.4.

Missile Description	Panel Thickness	Velocity Below Which Spalling Will Not Occur
Steel rod, 1-inch diameter x 3 feet long, weight 8 pounds	18 inches	260 ft/s
	12 inches	210 ft/s
	12 inches with metal deck	230 ft/s
Utility pole, 13-1/2-inch diameter, 35 feet long, weight 1490 pounds, up to 30-foot elevation above plant grade	18 inches	255 ft/s
	12 inches	200 ft/s

Table 3.5.5-3 is a tabulation of the walls and roofs less than 2-feet thick for Category I structures and appurtenances at the Sequoyah Nuclear Plant. It is not critical that some of the

wall and roof panels, such as the stair penthouse for the Auxiliary Building, resist tornado-generated missiles as these panels do not protect safety-related equipment. However, such panels are included in order to provide a complete response to this question.

The right-hand column of Table 3.5.5-3 indicates whether the wall or roof protects equipment important to safety in a tornado event. This determination was made on the basis of the appendix to Regulatory Guide 1.117. The separation of vital equipment behind wall and roof panels less than 2-feet thick is discussed below. The item numbers correspond to those of Table 3.5.5-3.

I. General Cases

1.(1) A1 to A15 Portion of q-Line Wall. Reference Figure 1.2.3-2.

The vital equipment protected by this wall includes the 125-V batteries, chargers, and inverters, the 480-V transformers and electrical boards, and air-conditioning equipment. The q-line wall is 5-feet thick up to 7 feet above the base elevation for this equipment. The 18-inch wall begins where the 5-foot wall terminates. All of the equipment of different channel or train assignments is separated by reinforced concrete block walls.

1.(5) Upper Portion of A5 and All Line Walls. Reference Figures 1.2.3-1 and 1.2.3-3.

These walls protect the auxiliary control air compressors and spent fuel pool from tornado missiles. The redundant air compressors are separated by approximately 26 feet and are protected from horizontal tornado missiles.

1.(7) Air-Conditioning Equipment Rooms. Reference Figure 1.2.3-1.

The Train B air-conditioning equipment rooms on roof elevation 763.0 are separated by 126 feet. The air-conditioning equipment for the redundant train of equipment is located on the floor beneath this roof and is laterally separated from the rooms on the roof.

1.(9) Roof Elevation 763.0. References Figures 1.2.3-1 and 1.2.3-2.

The vital equipment below this roof includes the 125-V batteries, chargers, inverters, the 480-V transformers and electrical boards, and air-conditioning equipment. All of this equipment of different train assignments is separated by reinforced concrete block walls. In the vicinity of the 480-V shutdown board transformer rooms, there are eight 4-foot by 8-foot air intake openings and 14 4-foot by 4-foot air exhaust openings in the roof. In the vicinity of each Train A air-conditioning equipment room there is a 2-foot by 6-foot and a 50-inch by 50-inch ventilation opening in the roof. In the area under the elevation 763.0 roof, the Class 1E conduits and cable trays of different train assignments are laterally separated except for five locations.

1.(10) Roof Elevation 778.0. Reference Figures 1.2.3-1 and 1.2.3-2.

The hydrogen recombiner power cabinets are located in the rooms under these roofs. The redundant cabinets are separated by approximately 24 feet. There are four locations under both roofs where Class 1E conduits and cable trays are not laterally separated.

1.(11) Roof Elevation 791.75. Reference Figures 1.2.3-1 and 1.2.3-3.

The spent fuel pool is located 57 feet beneath this roof. The redundant auxiliary control air compressors are located under this roof and are separated by approximately 26 feet. Possible tornado missiles entering through the tornado pressure relief panel openings on the west end of the Auxiliary Building roof will not strike the auxiliary control air compressor in the west end of elevation 734.0 of the Auxiliary Building. Missiles entering through the tornado pressure relief panel openings on the east end of the elevation 791.75 roof and traveling in a straight line have only a very small angle of intersection with the stored spent fuel. Missiles entering through the tornado pressure relief panel openings on the west end of the elevation 791.75 roof and traveling in a straight line would not intersect any essential equipment. The HEPA filter room is not essential for safe shutdown and is constructed of steel angles and plates. The component surge tank is protected by the elevation 763.0 reinforced concrete slab with the HEPA filter enclosure and a 2-inch steel grating providing shielding across the opening above the tank. The essential control air is protected almost completely by the extremely small angle that a missile trajectory would have to follow in order to impact this equipment. Equipment beneath the elevation 734.0 floor is protected by the 18-inch to 36-inch thick concrete floor.

1.(13) U-line Wall Between A2 and A3 Lines. Reference Figure 1.2.3-2.

This wall protects the same equipment as item 1.(10).

1.(14) U-line Wall Between A13 and A14 Lines. Reference Figure 1.2.3-2.

This wall protects the same equipment as item 1.(10).

2.(1) Diesel Generator Building Walls. Reference Figure 1.2.3-17.

These walls protect the diesel generator sets and their auxiliaries. The diesel generator sets are located in individual rooms separated by 12-inch thick reinforced concrete walls. See also Special Case II.D in this response.

2.(2) Diesel Generator Building Roof. Reference Figure 1.2.3-17.

The main roof protects the diesel auxiliary boards, building ventilation fans, and the diesel air intake and exhaust units. The equipment serving the respective diesel generator sets is located in individual rooms separated by 12-inch thick reinforced concrete walls.

There are four 2-feet, 7-inch square roof penetrations for intake vents for the electric board rooms. These vents are located on the roof within the area enclosed by the 3-foot high, 8-inch thick concrete parapet. Additionally, there are two 3-feet by 30-inch roof penetrations in two of these board room areas for personnel access hatches and a 22-1/2-inch square exhaust penetration in each air filter room. Two other small ventilators are in the roof but these are not near vital equipment.

3.(1) West Steam Valve Room Blowout Lids. Reference Figure 1.2.3-1.

There is one main feedwater isolation valve located in the area under the steel blow-out panels provided for steamline break pressure relief of each west steam valve room. The valve and the 16-inch line downstream of the valve are protected from any missile penetrating the panels by the 36-inch main steamline located above the isolation valve and by the 14-inch wide flange beams provided for pipe break restraints (The main steamline in this area is downstream of the main steam isolation valves and, therefore, missile protection is not required for this portion of piping). The motor operator for the feedwater isolation valve is not under the main steamline and pipe restraint steel.

3.(2) East Steam Valve Rooms Exterior Walls. Reference Figure 1.2.3-1.

These rooms contain main steam relief and safety valves, and main steam and feedwater isolation valves. The roof of each room consists of a diaphragm-type, light gauge metal decking and is supported by four 24-inch wide flange beams. The main steam safety and relief valves are located about 20 feet and 16 feet, respectively, below the decking. Additionally, the roofs are partially covered by a 12-inch thick concrete awning which covers about one-third of the building. The adjacent Reactor Building shield wall, which extends 81 feet above the decking, further restricts the angle of possible missile entry. The main steam and main feedwater isolation valves are located below the safety and relief valves and are further protected from missile damage by four levels of wide flange beams (33-inch to 8-inch size), provided for pipe break restraint and support functions.

3.(3) West Steam Valve Room Roof. Reference Figure 1.2.3-1.

The roofs of the West Steam Valve Rooms consist of a diaphragm type, light gauge metal decking supported by three 24-inch wide flange beams. The main steam safety and relief valves are located about 40-1/2 feet and 36 feet, respectively, below the decking. In between the decking and valves is a 1-1/2-inch steel grating floor supported by three 24-inch wide flange beams and many 8-inch steel channels. The decking is enclosed on one side by the Reactor Building shield wall which extends 60 feet above the decking. The main steam and main feedwater isolation valves and auxiliary feedwater turbine supply piping are located below the safety and relief valves and are further protected from missile damage by five levels of wide flange beams (33-inch to 8-inch size), provided for pipe break restraint and support functions. The steam exhausts from the steam-driven auxiliary feedwater pump is carried vertically through the west steam valve room by 8-inch piping which terminates 2 inches above the decking.

4. Control Building Air Intake Covering. Reference Figure 1.2.3-1.

   The concrete covering protects two 35-inch by 35-inch openings in the Control Building roof. The openings are over a condensing unit of the Control Building air-conditioning system.

5. ERCW Intake Station Parapet Walls. Reference Figures 1.2.3-14, -15, -16. See also Special Case II.A in this response.

   The redundant trains of ERCW equipment within these walls are located in areas separated by 18-inch thick reinforced concrete walls.

6. Interim Pumping Station Parapet Walls.

   These walls no longer protect ERCW equipment.

8. Pipe Tunnels. Reference Figure 3.8.4-3.

   A portion of both trains of the ERCW piping is routed through both pipe tunnels. The tunnel roofs have an earth cover averaging 1-1/2 feet.

9. Category I Yard Manholes and Handholes. Reference Figures 3.8.4-5 & -6.

   The redundant trains of Class 1E electrical cable are routed through Category I manholes and handholes which are either entirely separate or designed with separating, reinforced concrete walls at least 9-inches thick between the trains. Cables in Manholes 7B, 8B, 9A, 10A, 13 A & B, 14 A & B, and Handhole 3 are protected against tornado missiles by a concrete slab at grade and steel plate barriers over the access openings. Manhole 12 is protected by steel plate barriers over the access openings. Additional protection for Manhole 12 is provided by the fact that the access passageways consist of 12 inch thick walls that extend 4 feet below grade before opening into the manhole chamber. Manhole Group 32, and Handhole Groups 54 thru 56 are protected by 18 inch concrete covers. Handhole 29 is protected by a 12 inch concrete cover.

   Manhole Group 31 and Handhole Groups 52 and 53 are protected by concrete covers which are 2 feet thick or greater.

10. ERCW Overflow Box.

    The discharge water of both trains of the ERCW System passes through this box. The roof protects the discharge from being blocked by tornado missiles. (See Figure 3.8.4-10.)

    II. <u>Special Cases</u>

    A. <u>ERCW Pumping Station</u>

    The location of the ERCW pumps on the deck of the ERCW intake station is shown in Figure 1.2.3-14. This figure also shows the location of the 18-inch

thick missile shield wall around the exterior of the station and the shield walls separating Train A and B pumps within the exterior walls. The thickness of these walls has been increased to 18 inches and the height of these walls have been increased to provide a beam seat for structural steel grillage roof system. The structural steel grillage roof system consists of a series of wide flange beams spaced about 9 inches on center and the longitudinal axis of the wide flange beams is rotated 45°. The roof system is calculated to withstand the missiles of spectrum B of Table 3.5.5-4.

B. Interim ERCW Pumping Station

This structure no longer contains the ERCW pumps. It is a Category I structure identified in Table 3.2.1-1 as the Condenser Cooling Water Intake Pumping Structure. It is designed for the missiles of Table 3.5.5-2.

C. CCW Discharge Gates

The Discharge Gates are not safety-related.

D. Diesel Generators

As shown in FSAR Figure 1.2.3-17, the diesel generators are totally enclosed in a reinforced concrete structure designed to protect the diesel generators. These figures also illustrate the missile shield protection over the air intake and exhaust penetrations.

The steel doors and steel bulkhead provided protection from missiles D1, D2, and D3 of Table 3.5.5-5. Following a NRC review in 1975-1976 the level of missile protection required was upgraded to include missiles D4, D5, and D6 of spectrum D. The steel doors and bulkheads were not adequate to withstand the additional missiles. Therefore, precast concrete bulkheads were placed in front of the door openings to provide the needed tornado missile protection. The precast concrete bulkheads consist of several individual sections stacked into place and bolted in position to the concrete walls. They will be removed only for major repair of the diesel generators.

The precast concrete bulkheads are 14-inches thick which is adequate to prevent penetration from the missiles in spectrum D. The 14-inch thickness is not sufficient to prevent some scabbing. However, the steel doors and bulkheads consist of exterior and interior skin plates, each 1/4-inch thick. Therefore, the thickness of the doors and bulkheads is sufficient to prevent scabbed particles from entering the diesel generator compartments. In addition, the steel doors open only to the exterior of the building, which means that the doors will always be closed when the precast concrete bulkheads are in place. The steel doors and bulkheads are also part of the building security system, which ensures that they will be closed during normal operation.

The diesel generator exhaust stacks are 22 inches in diameter and 1/4-inch thick. They extend 2 feet above the roof with a 12-inch-high splash guard to prevent entry of rainwater around the exhaust. The exhaust is protected from horizontal tornado missiles by the

3-foot-high parapet wall around the roof of the Diesel Generator Building. The top of the parapet wall is 48.5 feet above plant grade. From spectrum A (Table 3.5.5-2) the only credible missile at that elevation is the 1-inch-diameter steel rod.

Buried Piping

Tornado missile protection for all safety-related buried piping is provided by one of the five protective schemes described below.

1. 10 feet of compacted fine-grained soil.

2. 7 feet of compacted crushed stone.

3. 18 inches of conventional unreinforced concrete.

4. 18 inches of roller-compacted unreinforced concrete.

5. 7 feet of stone larger in size than 1032 for the dike area.

In each scheme, a 12-inch cushion of either compacted sand or fine-grained earthfill is required over the top of the pipe.

The acceptability of each scheme has been verified by a full-scale test program (Reference 13) in which missiles from the NRC spectrum were dropped from a helicopter into test pits of crushed stone or earthfill and onto concrete slabs. The missiles used in the testing were:

1. A 1500-pound utility pole,

2. A 12-inch-diameter schedule 40 steel pipe,

3. A 1-inch-diameter steel rod,

4. A 3-inch-diameter schedule 40 steel pipe, and

5. A 6-inch-diameter schedule 40 steel pipe.

Of these missiles, the 12-inch pipe and utility pole caused the greatest penetration depths. Impact velocities of 200-215 ft/s were achieved for both the utility pole and 12-inch pipe, which equals or exceeds the design velocities for those missiles. The protective thicknesses listed above are based on the maximum thicknesses observed in the test program and are, therefore, conservatively chosen.

3.5.6 References

1. J. Burnell, "The Flow of Boiling Water Through Nozzles, Orifices, and Pipes," The Institution of Engineers, Australia, March 1946.

2. A. Amirikian, "Design of Protective Structures," NP-3726, Bureau of Yards and Docks, Department of the Navy, Washington, D.C., August 1950.

3. C. V. Moore, "The Design of Barricades for Hazardous Pressure Systems," Nuclear Engineering and Design, vol. 5, 1967, pp 85-86.

4. Letter from Paul R. Spencer, U.S. Department of Transportation, National Highway Safety Bureau, dated September 28, 1970, transmitting automobile impact time-history deceleration data to TVA.

5. Norman J. DeLeys, et al, Full Scale Crash Tests of Rigid Simulated Heavy Vehicle Underride Guard, Cornell Aeronautical Laboratory, Inc., Buffalo, New York, March 1970. Report prepared for Department of Transportation, Federal Highway Administration, National Highway Safety Bureau, Washington, DC.

6. P. P. Bijlaard, "Stresses from Radial Loads on Cylindrical Pressure Vessels," Welding Research Supplement, December 1954. Report prepared for the Design Division of the Pressure Vessel Research Committee of the Welding Research Council.

7. Westinghouse Electric Corporation, Systems Standard Design Criteria, "Protection Criteria Against Dynamic Effects Resulting from Pipe Rupture," January 1970.

8. Electric Power Research Institute, "Full-Scale Tornado-Missile Impact Tests," Report No. EPRI NP-440, July 1977.

9. Civil Design Guide DG-C1.57, Rev. 1, "Design of Slabs for Missile Impact," 1979

10. ANSI/AISC N690-1984, "Nuclear Facilities-Steel Safety-Related Structures for Design Fabrication and Erection."

11. Bechtel Power Corporation, Topical Report BC-TOP-9, Rev. 1, "Design of Structures for Missile Impact," 1973.

12. Yura, J. A. Birkemoe, P. C. nd Ricles, J. M., "Beam Web Shear Connections: An Experimental study," Journal of Structural Division, ASCE, Vol. 108, No. ST2, Feb. 1982, pp. 311-325.

13. Testing of Protective Cover for Essential Buried Structures, CEB 81-2D, CEB 8106 16015.

TABLE 3.5.1-1 (Sheet 1)

MISSILES

Structure, Shield System, or Barrier	Types of Missiles Protected Against
Control Rod Drive Missile Shield	Control rod drive closure cap, entire control rod drive assembly (Subsection 3.5.2.1)
Reactor Building Internal Structures	Attachments in contact with contained fluid energy of the pressurizer, steam generator, reactor vessel, and control rod drive assemblies (Subsections 3.5.2.2, 3.5.2.3, and 3.5.2.4)
Steel Containment	Certain attachments and piping (Subsection 3.5.2.6)
Shield Building	Tornado-generated missiles (Subsection 3.5.2.7)
Ice Condenser Containment System	Tornado and internal missiles (Subsection 3.5.2.8)
Emergency Core Cooling System	Internal and tornado missiles (Subsection 3.5.2.9)
Containment Spray System	Tornado and internal missiles (Subsection 3.5.2.10)
Containment Isolation System	Tornado and internal missiles (Subsection 3.5.2.11)
Diesel Generator Building	Tornado missiles (Subsection 3.5.2.12)
Control Bay	Tornado and internal plant missiles (Subsection 3.5.2.13)
Spent Fuel Pit	Tornado and internal missiles (Subsection 3.5.2.14)
Auxiliary Building (Outside Walls and Roof, Floors, and Some Internal Walls)	Tornado and internal missiles (Subsection 3.5.2.15)

TABLE 3.5.1-1 (Sheet 2)

MISSILES

Structure, Shield System, or Barrier	Types of Missiles Protected Against
Control Building (Outside Walls and Roof)	Tornado missiles (Subsection 3.5.2.16)
Intake Structure	Tornado and turbine missiles (Subsection 3.5.2.17)
Electrical Cables (Internal)	Not protected (Subsection 3.5.2.5)
Yard Manholes, Handholes, and Underground Conduit Banks	Tornado missiles (Subsection 3.5.2.5)
Condensate Storage Tank	Tornado Missiles (Subsection 3.5.2.22)

TABLE 3.5.2-1

MISSILE CHARACTERISTICS

CRDM HOUSING PLUG - MISSILE CHARACTERISTICS

Plug Weight: 11 pounds
Plug Outside Diameter: 2.75 inches

Travel, x (ft)	Velocity, V (ft/s)	Kinetic Energy (ft-lb)
1	240	9,750
2	335	19,000
3	370	23,300
4	415	29,200
5	440	33,000

CONTROL ROD DRIVE SHAFT - MISSILE CHARACTERISTICS

Diameter: 1.75 inches
Length: 150 inches
Weight: 120 pounds

Drive Shaft Travel, x Outside Housing* (ft)	Drive Shaft Velocity, V (ft/s)	Drive Shaft Kinetic Energy (ft-lb)
1	151	42,900
2	162	49,000
3	171	55,000
4	179	60,200
5	189	66,500

*Distance from top of rod travel housing to bottom of missile shield.

CONTROL ROD DRIVE SHAFT AND MECHANISM - MISSILE CHARACTERISTICS

Missile Weight: 1500 pounds
Impact Outside Diameter: 3.75 inches

Travel, x (ft)	Velocity, V (ft/s)	Kinetic Energy (ft-lb)
1	14.3	4,600
2	20.2	9,200
3	24.8	13,800
4	28.6	18,400
5	32.0	23,000

TABLE 3.5.5-1

TORNADO MISSILE SPECTRUM FOR CATEGORY I STRUCTURES - ORIGINAL DESIGN*

1. A 2-inch x 4-inch x 12-foot board weighing 40 lb/ft^3, end-on at a speed of 300 mi/h.

2. A crosstie, 7 inches x 9 inches x 8-1/2 feet weighing 50 lb/ft^3, end-on at 300 mi/h.

3. An automobile weighing 4000 pounds at a speed of 50 mi/h, 25 feet off the ground.

4. A steel pipe 2 inches in diameter x 7 feet long, end-on at 100 mi/h. The pipe will be assumed to penetrate in the same manner as a solid rod because in small diameter pipes it is unreasonable to assume that penetration takes place by coring.

*Note: This table is provided for historical purposes only. This was the spectrum of record when the construction permit for Sequoyah was issued.

TABLE 3.5.5-2

SEQUOYAH NUCLEAR PLANT
TORNADO MISSILE SPECTRUM A
FOR CATEGORY I STRUCTURES[1]

Missile[2]	Description	Design Velocity ft/s (mi/h)
A1	Wood plank, 2 inches x 4 inches x 12 feet long, weight 27 pounds	440 (300)
A2	Cross tie, 7 inches x 9 inches x 8.5 feet long, weight 186 pounds	440 (300)
A3	Automobile, weight 4000 pounds, 25 feet above grade	73 (50)
A4	Steel pipe, 2-inch diameter x 7 feet long, weight 26 pounds	147 (100)
A5	Steel rod, 1-inch diameter x 3 feet long, weight 8 pounds	210 (143)
A6	Utility pole, 13.5-inch diameter x 35 feet long, weight 1490 pounds, up to 30 feet above plant grade	200 (136)

Notes:

[1]Excluding the new ERCW pumping station and diesel generator equipment doors. In addition to the Category I structures, this missile spectrum also applies to the barrier for the Condensate Storage Tanks as described in Subsection 3.5.2.22.

[2]Missiles A1 through A4 were considered in original design for horizontal direction only. Missiles A5 and A6 were based on structural adequacy of as designed structures for local effects only (see discussion in section 3.5.5) and are applied in all directions.

TABLE 3.5.5-3 (Sheet 1)

TABULATION OF WALLS AND ROOFS OF CATEGORY I STRUCTURES WHICH ARE LESS THAN 2 FEET THICK

Location and Description			Thickness	Protects Equipment Important to Safety (Reference Regulatory Guide 1.117)
1.	Auxiliary Building			
	(1)	Wall on q-line between column lines A1 and A15 from elevation 756.0 to 762.0	18 inches	Yes
	(2)	Walls of exhaust stack above roof at elevation 763.0	18 inches	No
	(3)	Walls and roof of stair penthouse and airlock above roof elevation 791.75	12 inches	No
	(4)	Walls on t-line between A5, A6, and A10, and all from elevation 763.0 to 790.63	12 inches	No
	(5)	Upper portions of A5 and all line walls above elevation 765.83	18 inches	Yes
	(6)	Walls of additional equipment buildings	18 inches	No
	(7)	Walls and roof of air-conditioning equipment rooms	18 inches	Yes
	(8)	Roof elevation 706.0 outside A1 and A15 lines	Slopes 16 inches to 18 inches	No
	(9)	Roof elevation 763.0	12 inches	Yes
	(10)	Roof elevation 778.0	12 inches	Yes
	(11)	Roof elevation 791.75 (with metal deck)	Slopes 9-1/2 inches to 13-1/2 inches	Yes
	(12)	Roofs of additional equipment building	12 inches	No

TABLE 3.5.5-3 (Sheet 2)

TABULATION OF WALLS AND ROOFS OF CATEGORY I STRUCTURES WHICH ARE LESS THAN 2 FEET THICK

Location and Description	Thickness	Protects Equipment Important to Safety (Reference Regulatory Guide 1.117)
(13) East-west wall under roof at elevation 778.0, between A2 and A3 lines	12 inches	Yes
(14) East-west wall under roof at elevation 778.0, between A13 and A14 lines	12 inches	Yes
(15) North-south wall under roof at elevation 778.0, adjacent to north additional equipment building	18 inches	No
(16) Air intake canopies on A1 and A15 lines	12 inches	No
(17) Parapet walls on roof	Varies 9 inches to 12 inches	No
2. Diesel Generator Building		
(1) Main walls	18 inches	Yes
(2) Main roof	Slopes 10-1/2 inches to 12 inches	Yes
(3) Appendage outside main building		
Walls	12 inches and 18 inches	No
Roof	12 inches and 18 inches	No
3. Main Steam Valve Rooms		
(1) Blowout lids in roof of West Main Steam Valve Rooms, elevation 729.0	1/2 inch steel plate	Yes
(2) Some of the exterior walls of the East Main Steam Valve Rooms	12 inches and 18 inches	Yes

TABLE 3.5.5-3 (Sheet 3)

TABULATION OF WALLS AND ROOFS OF CATEGORY I STRUCTURES WHICH ARE LESS THAN 2 FEET THICK

Location and Description	Thickness	Protects Equipment Important to Safety (Reference Regulatory Guide 1.117)
(3) West Main Steam Valve Room roof, elevation 765.0	See Note 1	Yes
4. Control Building		
Roof over the new air intake on top of Control Building with variable thickness	14 inches to 17 inches	Yes
5. New ERCW Pumping Station		
Parapet walls supporting steel grillage roof system	18 inches	Yes
6. Interim Pumping Station		
Parapet walls	21 inches	No
7. CO Storage Building		
Walls and roof	18 inches	No
8. Pipe tunnels to refueling water storage tank and primary makeup water storage tank		
Walls and roofs	Varies, 18 inches minimum	Yes
9. Class 1E electrical manholes and handholes		
Walls and roofs	See Note 1	Yes
10. ERCW overflow box		
Roof Walls (underground)	18 inches 6 inches minimum	Yes

Note 1 - See explanation in the text of the response.

TABLE 3.5.5-4

SEQUOYAH NUCLEAR PLANT
TORNADO MISSILE SPECTRUM B
FOR ERCW PUMPING STATION

Missile	Description	Design Velocity Exterior Wall ft/s (mi/h)	Design Velocity Roof System ft/s (mi/h)
B1	Wood plank, 4 inches x 12 inches x 12 feet, weight 200 pounds	368 (251)	294 (200)
B2	Steel pipe, 3-inch diameter, 10 feet long, weight 78 pounds	268 (183)	215 (147)
B3	Steel rod, 1-inch diameter, 3 feet long, weight 8 pounds	259 (177)	207 (141)
B4	Steel pipe, 6-inch diameter, 15 feet long, weight 285 pounds	230 (157)	184 (125)
B5	Steel pipe, 12-inch diameter, 15 feet long, weight 743 pounds	205 (140)	165 (112)
B6	Utility pole, 13-1/2-inch diameter, 35 feet long, weight 1490 pounds	241 (164)	205 (140)

TABLE 3.5.5-5

SEQUOYAH NUCLEAR PLANT
TORNADO MISSILE SPECTRUM D
FOR DIESEL GENERATOR EQUIPMENT DOORS

Missile	Description	Design Velocity ft/s (mi/h)
D1	100-pound missile with 4-inch diameter for impact area	147 (100)
D2	10-foot length of 2-inch standard pipe impacting endwise (weight = 36.5 pounds)	147 (100)
D3	10-foot length of 1/2-inch standard pipe impacting endwise (weight = 8.5 pounds)	147 (100)
D4	Wood plank, 2 inches x 4 inches x 12 feet long, weight 27 pounds	440 (300)
D5	Crosstie, 7 inches x 9 inches x 8.5 feet long, weight 186 pounds	440 (300)
D6	Steel pipe, 2-inch diameter x 7 feet long, weight 26 pounds	147 (100)

Missiles D1, D2, and D3 were considered in the original design of the equipment doors. Additional protection is provided for missiles D4, D5, and D6, by precast concrete bulkheads.

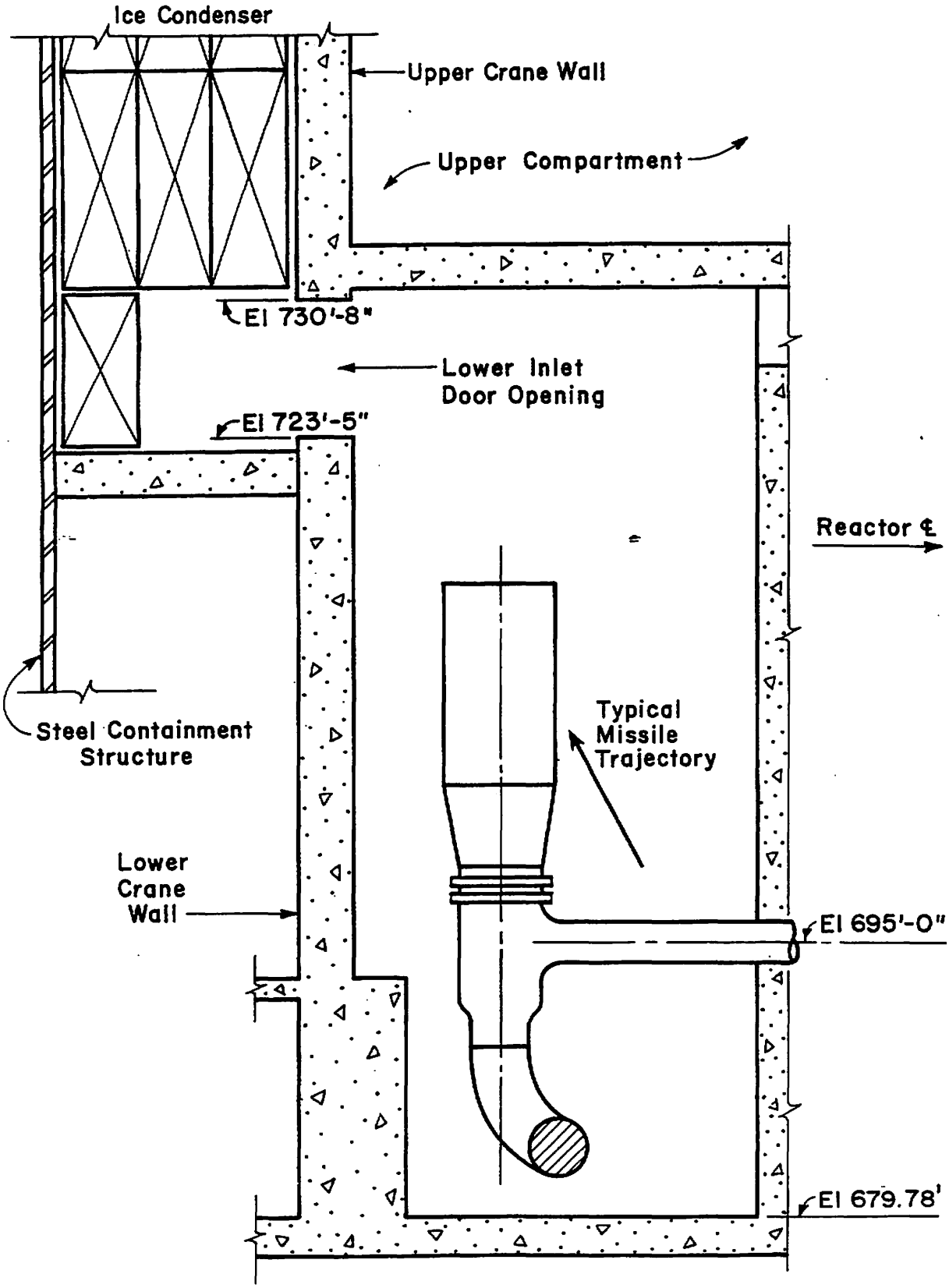

Figure 3.5.2-1 Ice Condenser Lower Inlet Door Opening, Typical Missile Trajectory Orientation

REVISED BY AMENDMENT 6.

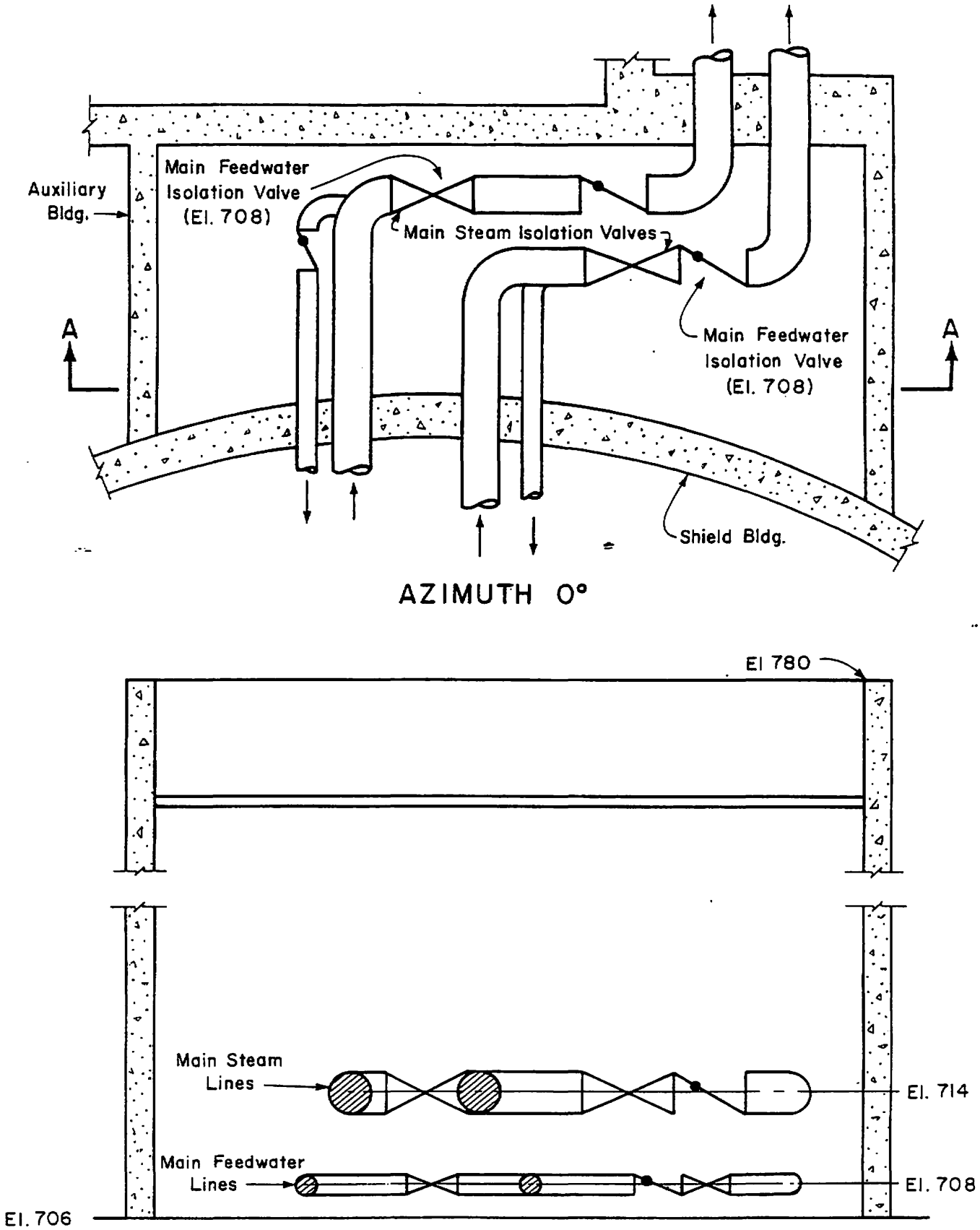

Figure 3.5.2-2 Location of Main Steam and Main Feedwater Containment Isolation Valves at Azimuth 0°

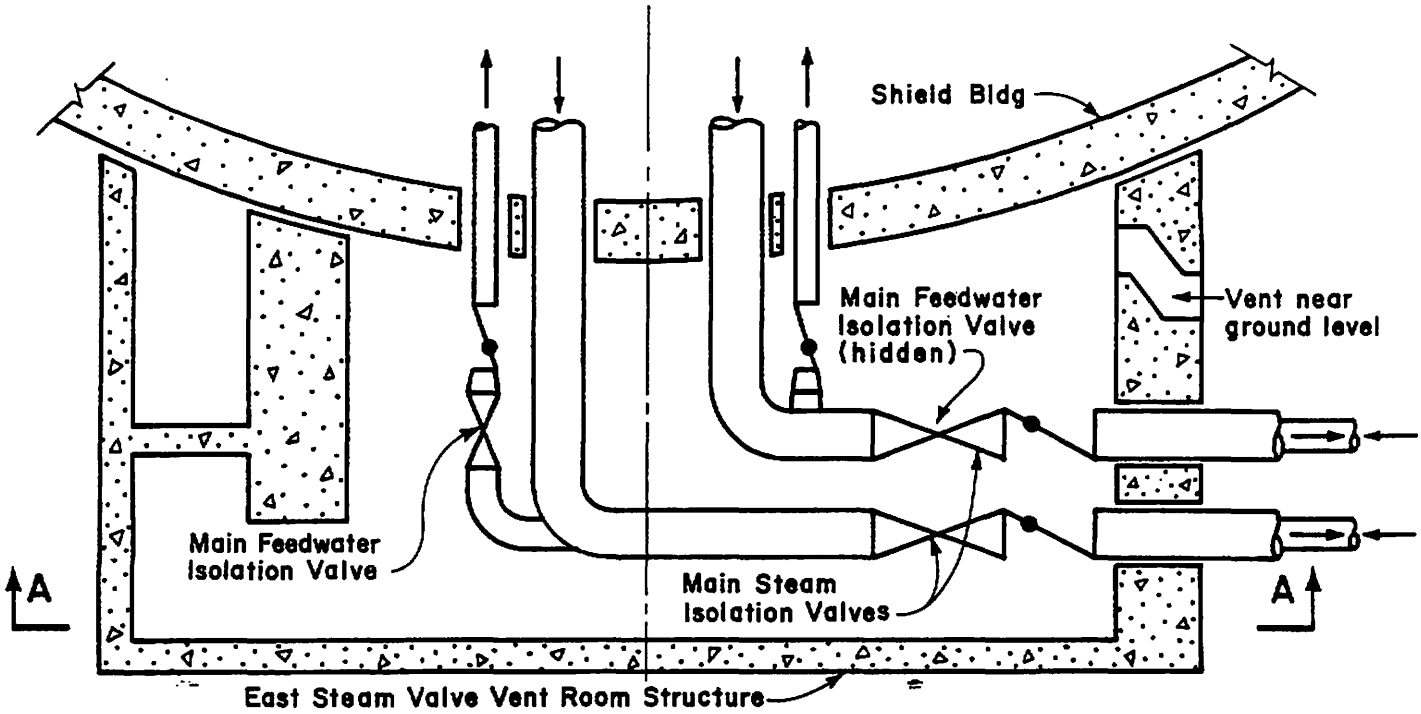

AZIMUTH 180°

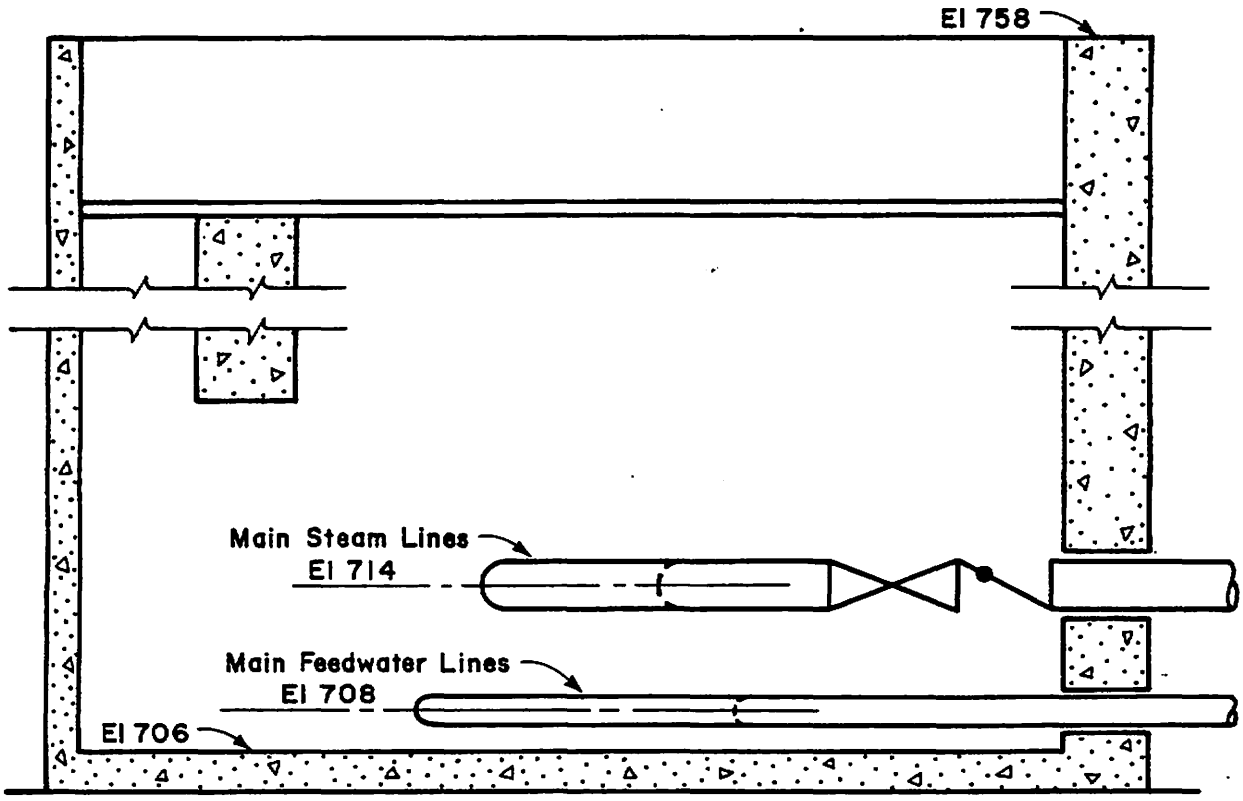

Figure 3.5.2-3 Location of Main Steam and Main Feedwater Containment Isolation Valves at Azimuth 180°

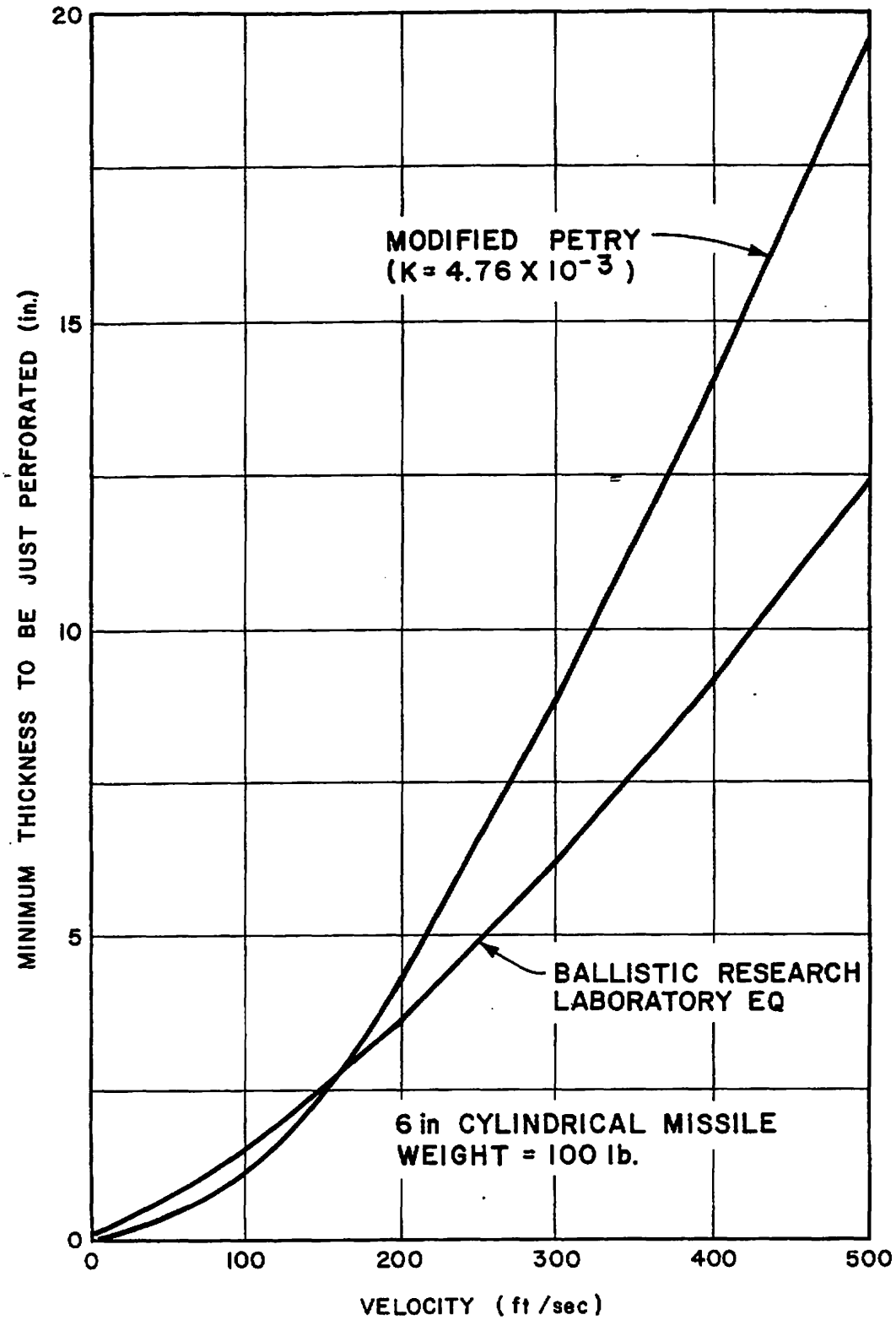

Figure 3.5.4-1 Comparison of Missile Formulas

Best Available Historical Image

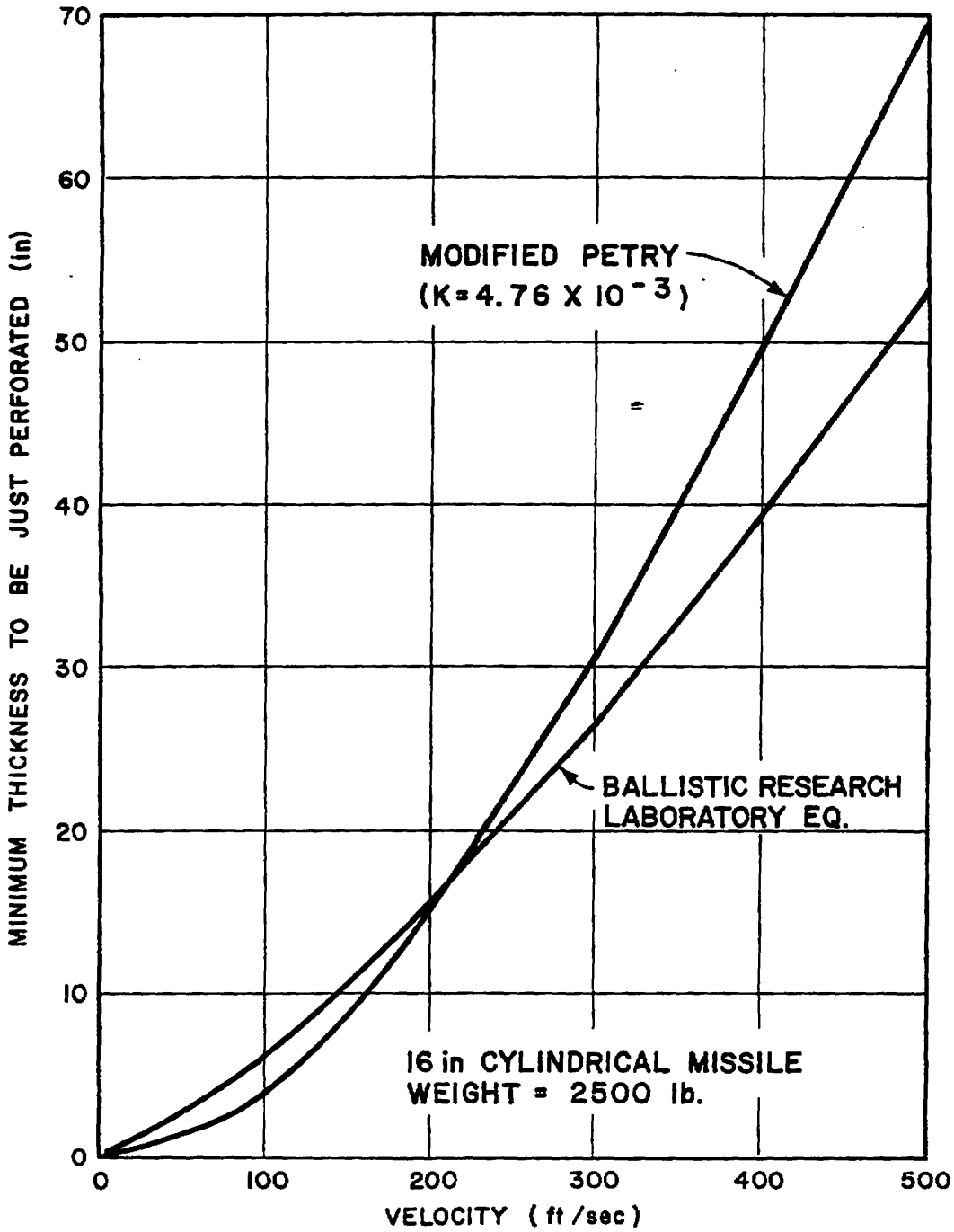

Figure 3.5.4-2 Comparison of Missile Formulas

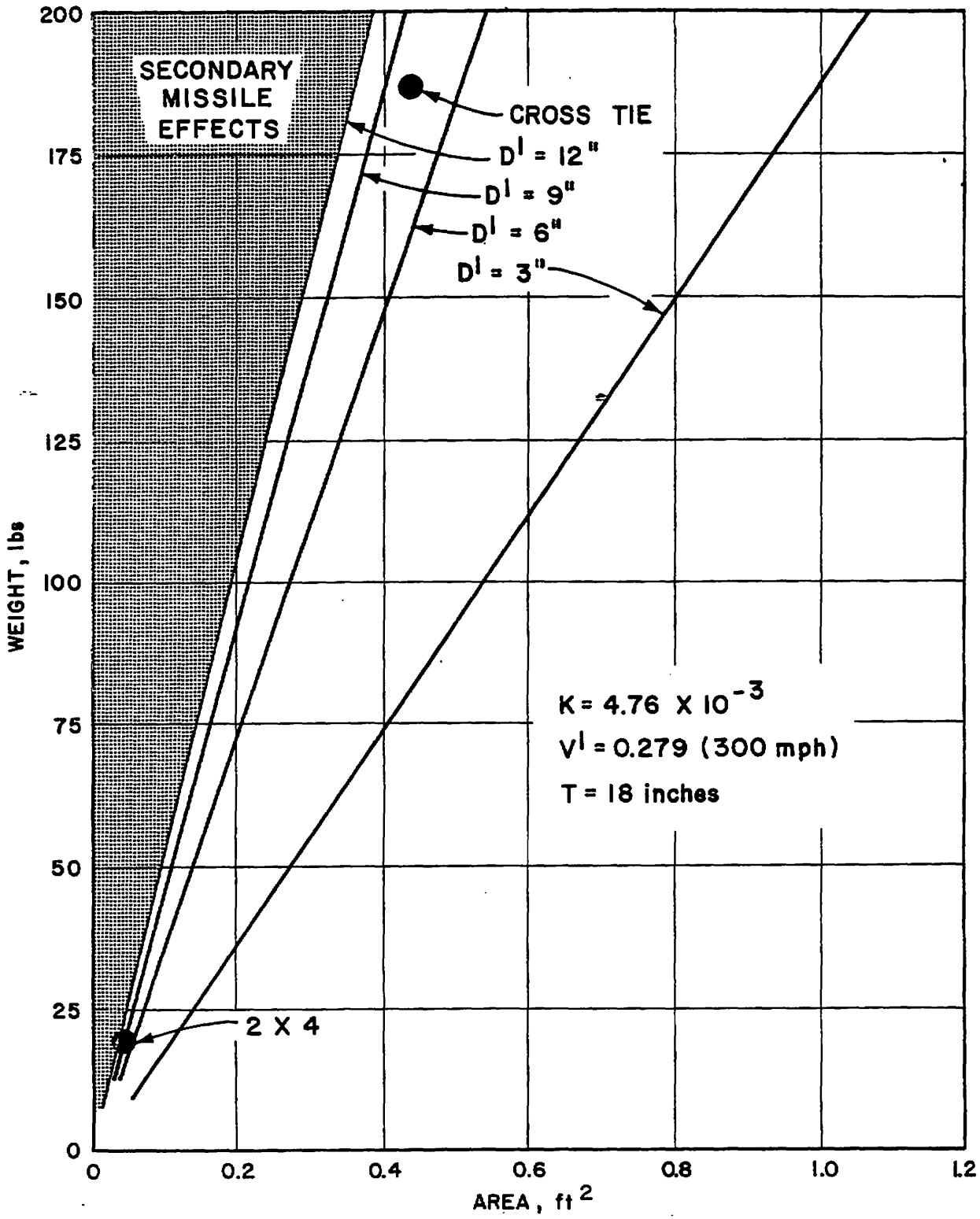

Figure 3.5.4-3 Depth of Missile Penetration for Tornado

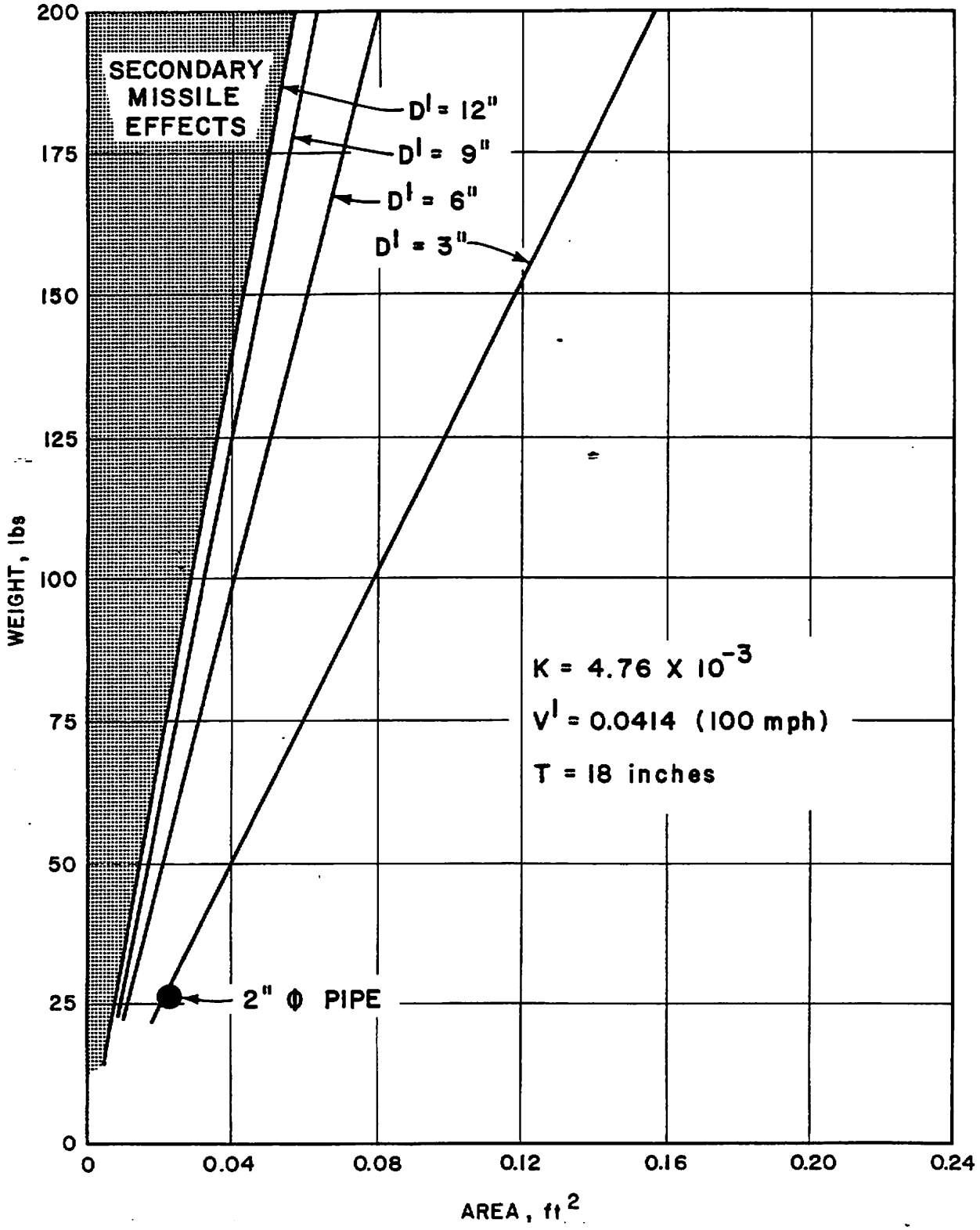

Figure 3.5.4-4 Depth of Missile Penetration for Tornado

3.6 PROTECTION AGAINST EFFECTS ASSOCIATED WITH THE POSTULATED RUPTURE OF PIPING

3.6.1 Systems in Which Design Basis Piping Breaks Occur

3.6.1.1 Main Reactor Coolant Piping System

The dynamic effects of double-ended postulated pipe ruptures in the reactor coolant loops have been eliminated from the design basis of the Sequoyah Nuclear Plant by the application of leak before break technology in accordance with the final rule change to General Design Criterion 4 (Federal Register Volume 52, Number 207, October 27, 1987, 41288). Authorization for their elimination is provided in Reference 2 and is based on fracture mechanics analyses results presented in Westinghouse WCAP-12011 (Proprietary) and WCAP-12012 (Non-Proprietary), "Technical Justification for Eliminating Large Primary Loop Pipe Rupture as the Structural Design for the Sequoyah Units 1 & 2" (Reference 3).

Design basis analyses were originally conducted based on the initial postulated double-ended breaks. With the application of leak before break technology, the pipe breaks described in Table 3.6.2-1 have been used to demonstrate the adequacy and acceptability of the plant design. These analyses shall remain the analyses of record unless indicated otherwise in this safety analysis report. Any future applications of, or relief taken based on the leak before break technology will be addressed on a case-by-case basis in a future update to this document.

As stipulated in the final rule change to GDC-4, a non-mechanistic double-ended rupture of the largest pipe in the reactor coolant system is still postulated for the purposes of containment design, ECCS design, and environmental qualification of electrical and mechanical equipment.

Previously postulated breaks in branch lines attached to the reactor coolant loops remain unaffected by this revision.

3.6.1.2 Other Piping Systems

Basic criteria used to evaluate effects resulting from a pipe failure inside containment (including the annulus and main steam valve rooms) at the Sequoyah Nuclear Plant are discussed below. The evaluation for pipe rupture outside containment and outside the main steam valve rooms is considered separately and is reported in TVA report No. CEB 72-22. While this report addresses protection against the dynamic effects of pipe failures, it also refers to associated evaluations for moderate and high energy line break flooding, as well as environmental studies for compliance with 10 CFR 50.49. These evaluations along with Design Criteria SQN-DC-V-13.9.3 and SQN-DC-V-21.0 document the basis for the Auxiliary Building High Energy Line Break (HELB) Detection System to provide main control room (MCR) indication upon detection of a HELB in the Auxiliary Building. This function is to ensure that environmental conditions remain bounded.

The criteria specifically defines acceptable consequences following a pipe failure, interaction effects of a whipping pipe, jet impingement, and environmental considerations. It includes criteria for postulating breaks for all piping systems except the main reactor coolant piping. Reactor coolant branch lines that connect to the main reactor coolant piping, including the pressurizer surge line are considered within the scope of "other piping systems." Assumptions regarding break size, shape, orientation, and location are in accordance with the intent of Regulatory Guide 1.46 (Rev. 0) and with the intent of guides transmitted to TVA by the NRC (AEC) in the December 1972 letter and with errata submitted in January 1973.

These criteria are intended to be conservative and allow a high margin of safety to be demonstrated. For those pipe failures where portions of these criteria lead to unacceptable consequences, further analyses based on more realistic assumptions will be performed. However, any less conservative criteria are adequately justified and fully documented for each case.

Definitions

The following definitions of pertinent terms are used in these criteria:

1. Inside Containment

For the purpose of these criteria, inside containment is defined to include all pipes and fittings inside the containment vessel and in the annulus and main steam valve rooms.

2. Pipe Failure

An instantaneous circumferential rupture, longitudinal split, or critical cracking of a pipe.

3. Pipe Whip

The movement of a pipe, subsequent to the formation of a plastic hinge, caused by the blowdown thrust resulting from a circumferential rupture or longitudinal split.

4. Jet Impingement

The hydraulic forces and temperature effects on components or structures produced by the direct impingement of a jet of process fluid (liquid or gas) emitting from a pipe failure.

5. Environmental Effects

The wetting, steaming, or flooding conditions, combustible fluid conditions, and temperature, pressure, or relative humidity changes within the zone of influence of a pipe failure in any area.

6. Zone of Influence

The maximum physical range of the direct effects of pipe whip, jet impingement, and/or environmental effects resulting from a pipe failure.

7. Single Active Failure

A single active failure is an occurrence which results in the loss of capability of a component (electrical, mechanical, instrumentation or control) to perform its intended active function upon command.

8. Reactor Coolant Pressure Boundary (RCPB)

The RCPB is the pressure retaining portion of the Reactor Coolant System and attached systems up to and including:

a. The outermost containment isolation valve in systems which penetrate primary reactor containment.

b. Second of two valves normally closed during normal reactor operation in systems which do not penetrate primary reactor containment.

c. Reactor Coolant System safety and relief valves.

9. Loss-of-Coolant Accident (LOCA)

A LOCA is the failure of RCPB piping that exceeds 3/8 inch inside pipe diameter and cannot be isolated. For a given mode of plant operation, the boundary of possible failure locations incapable of isolation (with single active failure) for piping connections extending from the Reactor Coolant System shall be limited, where applicable, to include only the following:

a. First locked closed or administratively closed isolation valve (pressurizer safety valves are included under this case).

b. Second of two normally open and remotely operable isolation valves capable of verification that they will close.

c. First normally closed check valve capable of verification that it is closed (incoming lines only).

d. Second of two normally open check valves capable of verification that they will close (incoming lines only).

e. First normally open and remotely operable isolation valve following a normally open check valve if both are capable of verification that they will close (incoming lines only).

If a pipe failure beyond the above defined boundary of possible failure locations could result in a normally open boundary valve failing to close, then the boundary of possible failure locations must be extended outward as necessary to include only valves which are not so affected.

10. Shutdown Logic Diagram

A logic diagram that establishes system requirements for reactor scram and shutdown to cold conditions following a given postulated accident.

11. Interaction Matrix

A matrix used to evaluate the extent of interaction between the pipe failure (source of interaction) and structures, systems, and components that are in the zone of influence of the pipe failure.

12. High-Energy Pipes

High-energy pipes are defined as those pipes which are in normal plant operation at a maximum temperature that is equal to or greater than 200°F and a maximum pressure that is equal to or greater than 275-lb/in^{2}g. The following are exceptions to this definition:

a. Piping components that experience the above conditions less than 1% of the plant operating life are excluded from this definition and are treated as low-energy piping. The RHR System is an example of such piping.

b. The connecting piping from the Safety Injection System accumulators to the Reactor Coolant System piping is considered as high-energy pipe. (This exception is based on the fact that a driving head is continued to be maintained during blowdown of the system.)

The definition of high-energy pipes is in agreement with criteria approved by the Nuclear Regulatory Commission and used for Browns Ferry Nuclear Plant. Those criteria for the Browns Ferry Nuclear Plant were submitted to the Commission during June 1973. Since the Sequoyah Nuclear Plant is of the same vintage as the Browns Ferry Nuclear Plant, the criteria for defining high-energy pipes are deemed to be acceptable.

Table 3.6.1-1 is a complete list (including maximum operating temperature and pressure) of all the piping systems inside containment where the TVA definition of high-energy piping is different from the one provided in Regulatory Guide 1.46.

Figure 3.6.1-1 illustrates the difference between the high-energy piping definition stated in Regulatory Guide 1.46 and that used in the Sequoyah Nuclear Plant pipe rupture analyses. The high-energy piping definition per Regulatory Guide 1.46 considers two regions of temperatures and pressure combinations that TVA has not classified as high energy.

One of these pressure temperature combinations (see Figure 3.6.1-1, Region A) has a maximum operating temperature equal to or greater than 200°F and pressure less than 275-lb/in^{2}g. This condition does not exist in any of the piping analyzed and therefore would not be of any consequence.

The other pressure temperature combination (see Figure 3.6.1-1, Region B) has a maximum operating pressure equal to or greater than 275 psig and temperature less than 200°F. The high-pressure piping associated with this region is a consequence of either a pump-driving head or pressure leakage past a valve that is in a line connected to the RCPB. The piping sections that are pressurized by a pump-driving head were investigated and the results indicated that the force associated with the pump-driving head at pump runout is not sufficient to cause equipment damage. The other category of piping, that pressurized by valve leakage because of the small leakage rate, does not have a jet driving force of sufficient duration to cause equipment damage. This extremely short jet duration is a result of the limited reservoir in the pipe section and the noncompressible nature of water.

There is one additional difference between the high-energy piping definition stated in Regulatory Guide 1.46 and that used in the pipe rupture analysis for Sequoyah Nuclear Plant. TVA excludes

piping runs from the definition of high-energy piping if they exceed the TVA classification of temperature and pressure less than 1% of the plant operating life. This exclusion is based upon the very low probability of experiencing a design basis rupture in a piping run while in this infrequent operational mode. This exclusion is consistent with the Nuclear Regulatory Commission's position for excluding very low probability events from consideration in safety analyses.

Therefore, based upon a general survey of the plant, it is concluded that an equivalent level of plant safety exists through use of the TVA criteria as would result if the TVA criteria precisely conformed to Regulatory Guide 1.46.

13. Low-Energy Pipes

Low-energy pipes are defined as those pipes which are in normal plant operation at a maximum temperature that is less than 200°F or a maximum pressure that is less than 275-lb/in^{2}g. Accumulator discharge piping that connects to Reactor Coolant Piping is excluded from this definition (see Item 12 above).

14. Engineered Safety Systems

Systems (mechanical, electrical, and instrumentation and control) designed to provide either a passive or active safety-related function to prevent and/or mitigate the consequences of postulated accidents.

15. Acceptable Interaction

An interaction for which, from a systems standpoint, the net required safety functions of systems, structures, and components are not impaired.

16. Active Component

Any component which must perform a mechanical motion or change of state during the course of accomplishing a safety function required to mitigate the effects of a given event.

17. Impact Barrier

An engineered structure located to limit pipe motion and designed to withstand the impact of a whipping pipe.

18. Interaction Evaluation Sheet

An itemized evaluation of interactions (shown on the interaction matrix) that indicates which interactions are acceptable or unacceptable, from a system standpoint, and which interactions result in intolerable damage.

19. Jet Deflector

A barrier which shields a target from the forces and environmental conditions within a jet.

20. Pipe Sleeve

A metal sleeve that encloses a portion of a process pipe that is designed to restrict jet forces and effects resulting from pipe failure.

21. Pipe Whip Restraint

An engineered structure which permits limited pipe motion and rotation and which limits or prevents pipe whip.

22. Plastic Hinge

A phenomenon resulting from a condition wherein a pipe receives external bending and/or torsional loading which causes a fully yielded cross section at one or more cross sections in the pipe.

23. Terminal Ends

Extremities of piping runs that connect to structures, components (e.g., vessels, pumps, etc.) branch connections, or pipe anchors that act as rigid constraints to piping thermal expansion. Inside containment a branch connection is not considered as a terminal end if each of the following are met:

a. That branch is modeled with the main piping run.

b. A rigorous ASME Class 1, 2, or 3, or a rigorous ANSI B31.1.0 analysis is conducted.

c. The nominal size of the branch line, in the vicinity of the branch connection, is greater than or equal to one-half the nominal size of the run.

24. Main Steam and Main Feedwater System Boundaries

The main steam and feedwater boundaries include tributary piping such as steam supply to the auxiliary feedwater turbine driven pump and the auxiliary feedwater discharge piping. The steam generator blowdown piping attached to the steam generator is classified as a feedwater type rupture. For branch lines connected to these systems, the boundary extends up to and including the first valve that is normally closed, or the second normally open check valve capable of providing isolation, or the second normally open valve capable of automatic closure.

3.6.2 Design Basis Pipe Break Criteria

3.6.2.1 Main Reactor Coolant Piping System

See Section 3.6.1.1.

3.6.2.2 Other Pipe Systems (Inside Containment)

3.6.2.2.1 Acceptability Criteria

In evaluating the consequential effects of pipe failure, multiple system or component failures resulting from the pipe failure is considered a part of the pipe failure. Any consequential effect of a subsequent single active failure is considered as part of the failure. The following criteria are not violated as a result of a postulated pipe failure.

The capability for automatic reactor scram and the ability to achieve and maintain a safe shutdown condition is not jeopardized even if the pipe failure is followed by a single active failure. The system requirements and available redundancy is that shown on a shutdown logic diagram, or an equipment list which defines the components that are necessary to mitigate the consequence of the postulated accident.

Radiation and environmental conditions within the control room or any location where manual action is required to achieve a safe shutdown condition is such as to assure the required habitability.

For a loss-of-coolant accident (LOCA), the following additional criteria apply:

1. Loss-of-containment leaktightness is prevented.

2. Failure of the steam-feedwater lines is prevented.

3. Propagation of the break to the unaffected reactor coolant loops is prevented.

Uncontrolled blowdown of more than one steam generator is prevented. (Potential multi-steam generator blowdown also includes failure of the main steam and feedwater system boundaries as defined in subsection 3.6.1.2(24)).

A main steam or feedwater pipe failure does not cause a LOCA. In evaluating instrument sense line interactions, redundancy of the lines and the ability to transmit adequate signals shall be evaluated in addition to consideration of the lines as extensions of the systems they sense. Evaluation of sense lines shall include those potential interactions identified above.

3.6.2.2.2 Pipe Failure Types, Sizes, and Orientation

1. Circumferential Rupture

   The break area is the cross-sectional flow area of the pipe at the break location. The plane of the break is normal to the pipe flow axis. Flow may be out of both ends of the break. This break is applicable to piping and branch runs whose diameter is greater than 1 inch nominal pipe size, and is postulated in high-energy piping at failure locations identified in Section 3.6.2.2.5.

2. Longitudinal Split

   The break area is assumed to be equal to the pipe flow area at the break location. The length of the break is assumed to be two inside pipe diameters and is parallel with the pipe flow axis. It may be located at any location around the circumference of the pipe. This break is applicable to piping and branch runs whose diameter is 4 inch nominal and larger.

3. Critical Crack

   The critical crack is assumed to have an opening length of one-half the pipe inside diameter and a width of one-half the wall thickness. It may be located at any point and oriented in any direction along the surface. Critical cracks are not postulated in piping 1 inch nominal diameter and less. It is applicable to low-energy piping but may be postulated in high-energy piping at particularly susceptible areas where the consequences could be severe.

3.6.2.2.3 Failure Time

Regardless of pipe failure type, the failure shall be assumed to open to its defined size instantaneously (developed within 1 millisecond).

3.6.2.2.4 Failure Consequences

The failure interactions that are evaluated to determine the consequences of failure are dependent upon the energy level of the pipe considered. They are as follows:

1. High-Energy Piping

   a. Pipe Whip Interaction
   b. Jet Impingement Interaction
   c. Environmental Interaction

2. Low-Energy Piping

   a. Jet Impingement Interaction (only if pressure exceeds 275 psig)
   b. Environmental Interaction

Jet impingement loads from cracks are considered on targets susceptible to load damage from these cracks only where the consequences could be severe.

3.6.2.2.5 Failure Location

Pipe failures in high-energy piping (excluding high-energy nonnuclear safety piping; i.e., main steam, extraction steam, condensate, feedwater, high-pressure drains, and vents) are postulated at the following locations (all safety-related piping has been designed in accordance with ANSI B31.1.0):

1. The terminal ends of piping or branch runs.

2. Any intermediate locations between terminal ends where the stresses calculated in accordance with ANSI B31.1.0 derived on an elastically calculated basis including loadings of a one-half shutdown earthquake and normal operational plant loading conditions exceeds 0.8 (S_h+ S_A).

3. Under regulatory requirements in effect prior to issuance of Reference 1 in section 3.6.9, the following criteria governed the postulation of arbitrary intermediate breaks:

   "If stress levels are such that a minimum of two intermediate locations between terminal points are not established in item 2 above, then additional breaks are postulated at the locations of highest combined stress level until the minimum is satisfied. However, for straight branch runs, no intermediate breaks are postulated unless the length of the run exceeds 20 pipe diameters or the requirements of item 2 above."

   In accordance with the revised requirements of Reference 1, postulation of break locations is now required only at terminal ends and at intermediate locations where the calculated stress exceeds the limits noted in item 2 above. These revised criteria will be implemented at SQN on a case-by-case basis where some benefit may be realized from the elimination of a previously postulated arbitrary intermediate break (AIB). Under such circumstances, the actions taken may include removal or inactivation of any mitigative devices installed as a result of that AIB. Each action of this type will be evaluated to ensure that there is no conflict with the current license or technical specifications.

4. Line-supported valves sometimes form the interface between high-energy lines and low-energy lines. In this case, terminal as described in item 1 does not exist at the line-supported valve. Prior to the issuance of Reference 1, the following alternate criteria were applied to piping runs or branches which have a high/low-energy interface with no stresses exceeding the limits stated in item 2:

Case 1: No terminal point in the high-energy portion.

   a. For one or no elbow, one break is postulated at the highest stress point in the high energy portion.

   b. For two or more elbows, two breaks are postulated at the highest stress point in the high energy portion.

Case 2: One terminal point in the high-energy portion.

   a. For one or no elbow, one break is postulated at the terminal point in the high-energy portion.

   b. For two elbows, one terminal point break and one intermediate point is postulated at the highest stress point in the high-energy portion.

   c. For three or more elbows, one terminal point break and two intermediate points are postulated at the high-stress points in the high-energy portion.

Pipe failures in high-energy nonnuclear safety and high-energy field routed piping is postulated at all inline fittings and terminal ends. Circumferential ruptures and longitudinal splits are the failure types postulated. This procedure may be used as an alternate method for postulating breaks in other high-energy lines also.

The following exceptions are applicable for high energy piping:

a. Longitudinal splits are not postulated at:

   (1) Terminal ends or branch connections.

   (2) At intermediate locations where the criterion for a minimum number of break locations is applied (i.e., combined stresses do not exceed 0.8 (S_h + S_A).

b. If the stresses exceed 0.8 (S_h + S_A), longitudinal splits are not postulated if the stress in the axial direction is greater than or equal to 1.5 times the stress in the circumferential direction; and circumferential ruptures are not postulated if the stress in the circumferential direction is greater than or equal to 1.5 times the stress in the axial direction.

c. For high energy piping seismically analyzed in accordance with ANSI B31.1, critical cracks need not be postulated in piping with a nominal diameter greater than 1-inch where the primary plus secondary stress as defined in subsection 3.6.2.2.5(2.) is below 0.4 (S_h + S_A).

Low-energy piping (including low-energy nonnuclear safety and low-energy field routed piping) is not postulated to whip but is considered to fail (critical crack) at the most adverse locations with regard to jet impingement and environmental interactions. Jet impingement and environmental effects of a break size equal to a critical crack are evaluated for the worst case normal plant operating condition to determine if reactor scram and safe shutdown can be achieved with a subsequent worst single active failure. As a minimum, the ability to achieve a scram and safe shutdown condition is demonstrated including a subsequent worst single active failure.

For low energy piping seismically analyzed in accordance with ANSI B31.1, critical cracks may be excluded in piping with a nominal diameter greater than 1-inch where the following rules apply:

   a. The piping systems are located in or adjacent to areas containing structures, systems, and/or components important to safety provided they are enveloped by previously postulated high energy breaks in the same region, or

   b. Where the primary plus secondary stress as defined in subsection 3.6.2.2.5(2.) is below 0.4 (S_h + S_A).

The criteria for piping which extends from the containment penetrations to the first isolation valve outside containment are identical to that used for the remainder of the piping. Break exclusion criteria in these areas were not utilized for Sequoyah Nuclear Plant.

3.6.2.2.6 Reanalyzed Piping

When high energy piping has been analyzed, break locations identified, postulated breaks evaluated, and mitigative devices designed, reanalysis of the piping systems will alter the

previous pipe break locations and/or types only if:

a. There has been a significant geometry change in the routing of the high energy piping in the vicinity of the original intermediate breaks, or

b. The reanalysis results in stresses for which breaks must be postulated [section 3.6.2.2.5(2)] at any new intermediate locations in the high energy piping. In other words, if the allowable stress level [section 3.6.2.2.5(2)] in the high energy piping is exceeded at specific intermediate points in the reanalyzed piping, and that level was not exceeded at those points in a previous analysis, then additional break locations or revised type of breaks, as needed, will be evaluated at only those specific points.

3.6.3 Design Loading Combinations

3.6.3.1 Main Reactor Coolant Piping System

The design loading combinations for the Reactor Coolant piping are given in Section 5.2.

3.6.3.2 Other Piping Systems (Inside Containment)

3.6.3.2.1 Interaction Criteria

The following criteria define how interactions are evaluated in an interaction matrix.

3.6.3.2.2 Pipe Whip Interaction

A whipping pipe is considered to inflict no damage on other pipes and associated supports of equal or greater size and wall thickness.

An active component (electrical, mechanical, instrumentation, or control) is assumed incapable of performing its active function following impact by a whipping pipe.

Electrical cabling and wiring (including instrumentation and control) is considered to lose function upon impact by a whipping pipe.

Structural components are assumed to fail upon experiencing loads resulting from pipe impact that exceed the design allowable loading.

3.6.3.2.3 Jet Impingement Interactions

Piping subjected to jet impingement is assumed to fail if the pipe stress exceeds the allowables for the extreme loading condition as defined for the applicable piping classification. This evaluation is conducted using a screening criteria for separation distance based on the minimum distance required to assure that the stress associated with the jet load plus normal loads does not exceed the faulted allowable stress for the piping.

Piping and associated supports subjected to a jet force from a break in piping of equal or lesser nominal size and wall thickness are assumed to experience no unacceptable damage.

Electrical cabling and wiring (including instrumentation and control) that are not protected by an adequate conduit or cable tray design shall be considered to lose function, unless it is shown to be insensitive to the imposed environment and loadings. Conduit and instrument sense lines shall be assumed to fail if the stress resulting from jet loading exceeds the allowable for the extreme loading condition as defined for the applicable conduit and/or instrument sense line material and classification. This evaluation is conducted using separation screening criteria similar to that used for piping above.

Active components (electrical, mechanical, instrumentation, and control) are assumed incapable of performing their function if submerged in a jet, unless the component is shown to be insensitive to the imposed environment and loadings.

When the jet consists of steam or flashing subcooled liquid, unprotected equipment/components located at a distance greater than 10 diameters (broken pipe ID) from a large break (circumferential rupture or longitudinal split) opening or an equivalent break diameter from a critical crack (see subsection 3.6.2.2.2 for break sizes), shall be assumed to be undamaged by the jet without further analyses, provided that the environmental qualification of the target has not been exceeded.

Concrete erosion that may result from jet impingement is assumed to be of insufficient magnitude to jeopardize structural integrity.

3.6.3.2.4 Environmental Interaction

Electrical cabling and wiring (including instrumentation and control) is considered to lose function upon exceeding any of its environmental ratings.

An active component (electrical, mechanical, instrumentation, and control) is assumed incapable of performing its active function upon experiencing environmental conditions exceeding any of its environmental ratings. However, credit for the component may be taken if sufficient time is available for accomplishing its function before environmental ratings are exceeded.

Although the separation distance may be greater than 10 break diameters to preclude physical damage to unprotected targets, as stated in subsection 3.6.3.2.3, targets are evaluated to assure that their environmental rating is not exceeded.

Structural and concrete components are assumed to fail upon experiencing environmental loading conditions that exceed design limits.

3.6.3.2.5 Pipe Whip Restraint Design

The maximum design limits which are generally representative of those used in the design of pipe whip restraints are shown in the following table:

Type of Design	Energy Absorbing	Elastic
Loads considered	D, L, T_a ,R_a ,P_a ,Y_r ,Y_j ,Y_m , and F_{eqs}	D, L, T_a ,R_a ,P_a ,Y_r ,Y_j ,Y_m , and F_{eqs}

Stress/strain limits	50% uniform ultimate strain	1.5 S_m or 1.2 S_y, but not to exceed 0.7 S_u

The above elastic design limits are representative of those identified by Westinghouse in WCAP-8172-A for linear component supports associated with the primary loop (including those which also act as pipe whip restraints). For TVA scope of design, other than the primary loop, the applied load is limited to 0.9Y where Y is the maximum section strength based on plastic design with flow stress equal to 1.15 S_y (15% increase due to the high rate of strain and strain hardening). Plastic design methods are those described in Part 2 of AISC "Specification for the Design, Fabrication, and Erection of Structural Steel for Buildings," February 12, 1969.

Note: Earthquake and pipe rupture are not assumed to exist concurrently when evaluating the pipe whip restraints.

Stress/strain limits for crushable material utilized in restraint design are based on manufacturing data, analyses, and tests.

D = Dead load

L = Live Load

T_a = Thermal load resulting from postulated break

P_a = Pressure load resulting from postulated break

R_a = Pipe reactions resulting from postulated break

Y_r = Pipe restraint reactions resulting from postulated break

Y_j = Jet impingement load generated by postulated break

Y_m = Pipe whip impact load resulting from postulated break

F_{eqs} = Loads generated by safe shutdown earthquake

S_m = Design stress-intensity value at given temperature

S_y = Yield stress value at given temperature

S_u = Minimum ultimate tensile strength value at given temperature

Restraint design information for outside containment is contained in TVA report No. CEB 72-22.

3.6.4 Dynamic Analyses

3.6.4.1 Main Reactor Coolant System

See Section 3.6.1.1.

3.6.4.2 Other Piping Systems (Inside Containment)

The following other piping systems inside containment and inside the main steam valve rooms are considered for the effects of postulated ruptures upon plant shutdown:

Main Steam
Main Feedwater
Steam Generator Blowdown
Auxiliary Feedwater
Chemical and Volume Control
Component Cooling Water
Demineralized Water
Essential Raw Cooling Water
Primary Water
Residual Heat Removal
Safety Injection
Service Air
Waste Disposal
Containment Spray
Reactor Coolant
Spent Fuel Pool Cooling and Cleanup
Floor and Equipment Drains

The pressure time history, jet impingement load on targets, and the thrust resulting from the blowdown of postulated ruptures in piping systems is determined by thermal and hydraulic analyses or conservative simplified analyses.

In general, the loading that may result from a break in large high-energy lines is determined using a dynamic blowdown analysis. Other piping was analyzed using either a dynamic blowdown or a conservative static blowdown analysis. The method for analyzing the interaction effects of a whipping pipe with a restraint is one of the following:

1. Lumped parameter method

2. Equivalent static method

3. Energy balance method

For small high-energy lines, a conservative static analysis model is utilized.

3.6.4.2.1 Jet Impingement

A static analysis is used to determine jet impingement forces on distant objects. The magnitude of the impingement force is determined by integrating the jet pressure over the area of the object fronting into the jet stream. This method of analysis is for all jet impingement forces on distant objects. The assumption that the total jet thrust at all cross sections perpendicular to the axis of the jet are equal is used to determine the jet pressures at required distances from the fluid exit.

The pressure, however, is computed by two separate methods. For the large high-energy lines, a computer code is used to predict a time history of the jet thrust at the exit of the rupture from which, knowing jet cross-sectional area, the pressures are computed. Figure 3.6.4-1 shows a typical thrust-time history. Characteristically, the thrust is equal to line pressure times the area at the instant of rupture, and begins increasing thereafter as the fluid is accelerated out of the break. Within a short time, however, choking takes place at the break and the thrust drops sharply. After choking, a quasi-steady state thrust is established, and a gradual thrust (and pressure) decay begins as the fluid inventory in the system is depleted. Jet expansion half-angles of 20° and the assumption that the total jet thrust at all cross sections perpendicular to the axis of the jets are equal is used to determine the jet pressures at required distances from the fluid exit.

The following general criteria govern the time history analyses:

A. Analysis considers flow from both sides of break where there is significant stored fluid energy.

B. Discharge coefficients are equal to 1.0 for all breaks.

C. Credit is taken for flow limiters, line restrictions and pipe friction as applicable.

D. Breaks are assumed to occur instantaneously.

E. Initial condition for break is the worst case operational condition.

The program output includes time history values of mass flow, thrust, pressure, temperature, enthalpy and other thermodynamic quantities at specified points in the system and at the break.

For other lines and as an alternative to the computer analysis, the total thrust force, T, acting on the pipe at the break is conservatively taken as:

$T = 2.0\ (P_o - P_e)A$ (Subcooled blowdown)

$T = 1.26\ (P_o - P_e)A$ (Saturated, flashing, or superheated blowdown)

where

P_e = Initial atmospheric pressure

P_o = Initial line pressure

A = Break area

This thrust is considered as an instantaneously (developed within 1 millisecond) applied constant force.

The size, distance, and orientation of the target object with respect to the jet direction are considered in determining the magnitude of the jet impingement force. Specifically, drag coefficients which consider geometry and nonorthogonality of the target object with respect to the jet axis are used.

In addition, the calculated jet impingement force reflects the following:

A. When the effective target area is greater than the jet area at the point of impingement, the fluid momentum is completely canceled. In other words, the progress of the jet is effectively checked.

B. When the effective target area is very small compared with the jet area at the point of impingement, any change in the jet pressure caused by such a target is considered negligible for the purpose of evaluating loads on subsequent targets, so long as the jet is not bifurcated or otherwise altered.

C. Dynamic loading effects of the jet on the structure is considered by use of appropriate amplification factors. An amplification factor of 2.0 is normally used.

Several jet expansion half-angles are used in the industry for determining impingement pressures (see Figure 3.6.4-2). Large half-angles produce rapid decay of pressure and a large number of targets because of greater expansion of the jet envelope. Small half-angles, however, result in very large forces at great distances from the postulated break and a relatively small number of targets. TVA uses a 20° half-angle expansion for the evaluation of Sequoyah Nuclear Plant.

A general survey of the plant inside containment, including the adjacent main steam isolation valve buildings, has been conducted to identify structures, systems, and components in which a problem might result if a jet cone angle model currently accepted by the NRC (10° half-angle) was used instead of the TVA accepted 20° half-angle conical model. It is concluded from the survey made that the NRC model would yield essentially a similar set of evaluation results and that the protection requirements currently being implemented provide either equivalent or essentially identical protection. This conclusion is based upon the fact that since systems and components are in close proximity inside these structures the loading effect was generally unacceptable in nearly all cases for the 20° jet model. Protection requirements currently being incorporated are designed to either redirect the jet or assure the loading does not result in unacceptable consequence to the adjacent components. While the 10° model would yield a lesser number of components impinged upon and conceivably fewer protection requirements, essentially identical protective devices would be required.

Therefore, no significant change in protective requirements for structures, systems, and components would result if the NRC currently accepted jet model was used for the evaluation of the Sequoyah Nuclear Plant inside containment or inside the main steam isolation valve buildings.

3.6.4.2.2 Pipe Whip Evaluation

A pipe whip evaluation is performed for each of the postulated high-energy design basis ruptures. The initial portion of this evaluation consists of analyses to determine those pipe runs

and branches where pipe whip would actually result from rupture. The predicted pipe whips are then investigated with respect to their potential for damage to essential plant equipment and structures. Finally, locations and design loads are developed for pipe whip restraints required to prevent unacceptable damage to equipment and structures.

In general, the analyses for large high-energy lines, for which pipe whip would represent substantial plant damage potential, is carried out using a computer program. The analyses for smaller lines make use of simplified techniques using dynamic load factors. The following general criteria is applied to the entire pipe whip evaluation:

A. The dynamic nature of the piping thrust load is considered.

B. Nonlinear (elastic-plastic strain hardening) pipe and restraint material properties are considered.

C. Pipe whip is considered to result in unrestrained motion of the pipe along a path governed by the hinge mechanism and the direction of the vector thrust of the break force.

D. The effect of rapid strain rate on material properties is considered. In the absence of justification to the contrary, a 10% increase in yield and ultimate stress under dynamic load is assumed.

For large high-pressure steam lines, postulated breaks produce very high blowdown forces. The gaps provided for thermal expansion cause amplification of these forces, and the magnitude of the amplification is dependent upon the amount of gap provided for the particular line. For the large number of restraints required to contain the pipes against postulated pipe failure, two approaches are available:

(1) Design the restraints, supplementary steel, embedments, and building elements to accommodate large dynamic load factors and minimize the detail of analyses and design used for the restraints.

(2) Design the supplementary steel, embedments, and building elements to accommodate a lesser dynamic load factor (2.0) and perform more refined design of the restraints. This design utilized techniques such as inelastic considerations, crushable materials, etc., and sufficient analyses to demonstrate that the load factor of 2.0 is not exceeded in the actual design.

A dynamic load factor of 3.0 (option 1 above) is used for small lines and wherever technical and economic considerations allow. For very large lines, option 2 is implemented.

For each rupture, for which it is determined that pipe whip can occur, a listing of all possible interactions is prepared. The result is a matrix showing all ruptures versus all targets. Further analyses determine the acceptability of each interaction with respect to the overall capability of achieving a safe shutdown of the plant.

In cases where it is determined that damage resulting from pipe whip is not acceptable, pipe whip restraints or other preventive measures are developed. The pipe whip restraints are

designed with an initial clearance to prevent interference with the pipe in normal operation. Impact effects due to this clearance are considered. The restraint design considers elastic-linear strain hardening of the material.

3.6.4.2.3 Structural Evaluation

A structural evaluation is performed to assess the effects of the postulated pipe break on essential plant structures. This evaluation includes:

A. Analysis of structural components and structures for pipe whip impacts and jet impingements.

B. Analysis of structures and structural support systems for pipe whip restraint and jet impingement barrier reaction loads.

C. Analysis of piping anchor structures for pipe break loads.

The following criteria are applied in the structural evaluation:

A. Damage to any structure, caused either directly or indirectly via failure of an adjacent structure, does not impair function of any system or component required for protection, mitigation of consequences, or safe shutdown following the pipe break.

B. Pipe break does not result in collapse of any Category I structures.

C. The structural integrity of the primary containment fission product barrier is maintained.

D. The structural integrity and habitability of the control room and the shutdown board room is preserved.

E. Structural analyses for pipe rupture loads are generally performed using limit analyses techniques, such as collapse load analysis for beams and frames and yield line theory for concrete slabs. Account is taken for resistance of structural elements in their plastic range.

F. Maximum section strength of concrete structures is computed using the ultimate strength design method. Maximum section strength of steel members is based upon the assumption of elastic-perfectly plastic material properties and plastic design criteria (Reference Section 3.6.3.2.5).

In general, for large high-energy lines whose failure could cause substantial plant damage, either the lumped-parameter or the energy-balance analysis model is used. For other systems, the static analysis model is used. Dynamic response amplification is accounted for by multiplication of loads by appropriate dynamic factors.

3.6.5 Protective Measures

3.6.5.1 Main Reactor Coolant Piping System

Per Section 3.6.1.1, the dynamic effects of ruptures in the primary coolant loop have been eliminated.

The following Section describes the remaining protective measures/devices.

3.6.5.1.1 Pipe Restraint Design Criteria

All main coolant loop pipe whip restraints are inactive.

3.6.5.1.2 Protective Provisions for Vital Equipment

In addition to pipe restraints, barriers and layout are used to provide protection from the effects of pipe rupture. In reviewing the mechanical aspects of these lines, it is demonstrated by Westinghouse Nuclear Energy System tests that lines hitting equal or larger size lines of same schedule do not cause failure of the line being hit, e.g., a 1-inch line, should it fail, does not cause subsequent failure of a 1 inch or larger size line. The reverse, however, is assumed to be probable, i.e., a 4-inch line, should it fail and whip as a result of the fluid discharged through the line, could break smaller size lines such as neighboring 3-inch or 2-inch lines.

Whipping in bending of a broken stainless steel pipe section such as used in the Reactor Coolant System does not cause this section to become a missile. This design basis is demonstrated by performing bending tests on large and small diameter, heavy and thin-walled stainless steel pipes.

3.6.5.1.3 Criteria for Separation of Redundant Features

There are no redundant features associated with the Main Reactor Coolant Piping System.

3.6.5.1.4 Separation of Piping

This topic is not applicable to the Main Reactor Coolant Piping System.

3.6.5.1.5 Pipe Restraints and Locations

In the original construction of Unit 1 and Unit 2, there were three piping restraints for the main reactor coolant piping. These were located on the crossover leg pipe; one at each end of the horizontal run and the other at the center of the vertical run on the steam generator side. As illustrated in Figure 5.2.1-4, the crossover vertical run restraint and both the crossover horizontal run restraints were deactivated as a result of activities performed by the Unit 1 and Unit 2 Steam Generator Replacements.

These supports are discussed further in Section 5.2.

3.6.5.2 Other Piping Systems

For examples of piping inside containment see Sections 3.6.7.6 and 3.6.7.7. For piping outside containment refer to TVA report No. CEB 72-22.

3.6.6 Assumptions

The following assumptions are made relative to plant operation before and after a pipe failure.

3.6.6.1 Plant Operating Mode

At the time of pipe failure, the plant will, in general, be assumed to be in any mode of normal plant operation. For safety-related piping components, the normal plant mode of operation including the 1/2 SSE which produces the highest stress levels is the applicable mode for postulating the pipe failure locations.

Examples of possible normal plant operating modes are:

1. Plant startup
2. Shutdown cooling
3. Cold shutdown
4. Operation at power
5. Hot standby
6. Testing
7. Refueling

3.6.6.2 Offsite Power

If determined to be a worst case, offsite power, in addition to the single active failure, is assumed to be unavailable during a portion of or throughout the sequence of events that follow a pipe failure. If, however, a detailed analysis can be provided to show that a loss of offsite power is not a consequence of the pipe failure, then a loss of offsite power is not assumed.

3.6.6.3 Unintended Operation of Equipment

The performance of an unintended active function by affected equipment in the zone of influence of a pipe failure is not considered unless the evaluation indicates specific cause/effect reasons for such occurrences.

3.6.6.4 Operator Response

It is assumed that a proper sequence of events is initiated by the operator to bring the plant to a safe condition with the capability of going to a safe shutdown if required. However, it is assumed that no action is initiated for at least ten minutes after pipe failure.

3.6.7 System Evaluation

3.6.7.1 General

The evaluation presented herein was conducted specifically for Unit 1 of the Sequoyah Nuclear Plant. However, because of the similarity with Unit 2, all relevant conclusions presented for Unit 1 are generally applicable for Unit 2.

3.6.7.2 Objective

The objective of this study is to determine if the plant could be placed in and maintained in a safe shutdown condition following a postulated pipe failure in any of the high or low-energy piping inside containment or inside the main steam valve rooms. Pipe failures are evaluated in accordance with subsections 3.6.2 and 3.6.3. Each postulated pipe failure inside containment and inside the main steam valve rooms is examined to assure that the consequences of the failure could be effectively mitigated. The evaluation for pipe rupture outside containment and outside the main steam valve rooms is considered separately and is reported in TVA report No. CEB 72-22.

3.6.7.3 Guiding Philosophy

The methods used to postulate breaks, identify interactions, evaluate damage, and determine the consequences are rigorously systematic. Two considerations are paramount: (a) assurance that all credible dynamic effects of the postulated breaks are addressed, and (b) assurance that protection is provided for those systems and components which are essential in safety system response to a particular postulated event.

3.6.7.4 Exclusions

3.6.7.4.1 Field Routed Systems

Field routed piping and cabling are generically considered as targets of pipe failure effects, with the piping also considered as a source. Final field routes were determined during plant construction. Therefore, selection of individual targets and evaluation of the effects of failure in field routed systems were accomplished during an engineering followup with field evaluation to assure conformance to separation data on Units 1 and 2. Notification of the completion of the evaluation of field routed piping, inside containment and inside the main steam valve rooms, was provided to NRC by letter on December 16, 1983.

3.6.7.4.2 Flooding

Flooding resulting from postulated ruptures of the primary loop is more severe than flooding from any other break postulated .

The primary loop flooding is considered as the limiting condition in the design of the facility. There are no components within the containment in which flooding would jeopardize the ability to shut down the plant and maintain it in a safe shutdown condition.

3.6.7.4.3 Containment Pressurization

Pressurization of containment resulting from a postulated pipe rupture is not considered in this evaluation. The effect of a postulated primary loop rupture formed the pressurization design bases for the containment design.

3.6.7.5 Evaluation Procedure

Safety functions are identified for each initiating event by means of shutdown logic diagrams (SLD). The SLD identifies at least one success path from the postulated event to each protective function required to prevent the event's potentially unacceptable results. Each SLD includes the set of all safety systems necessary to provide the protective function specified at the end of the success path.

An interaction matrix is constructed for each postulated pipe rupture inside containment. The matrix consists of a chart showing every credible interaction for each postulated break.

All possible interactions are evaluated to determine their credibility, damage potential, and acceptability from the standpoint of safe shutdown capability.

3.6.7.6 Main Steam

3.6.7.6.1 Description of Piping System

The main steam supply system is a high-energy system designed to conduct steam from the steam generator outlets to the turbines and to the condenser steam dump system. This system also supplies steam to feedwater pump turbines, auxiliary feedwater pump turbines, and turbine seals.

The main steam supply system includes self-actuating safety valves to provide emergency pressure relief for steam generators, and atmospheric relief valves to provide the means for plant cooldown by steam discharge to the atmosphere if the turbine bypass system is not available.

The major portion of this system evaluated herein is 32" OD lines which begin at the steam generator outlets, descend to the crane wall penetration, extend through the guard pipes and bellows, penetrate the freestanding containment vessel and shield wall, then terminate at the flued anchor after traversing the main steam valve rooms. At the flued anchor the piping changes from TVA Class B to TVA Class H.

3.6.7.6.2 Protection Requirements

A rupture in a main steam line does not result in any of the following unacceptable events:

1. Initiate a LOCA.

2. Impair containment integrity to the limits that the intent of 10 CFR 100 is violated.

3. Render inoperative any engineered safeguard system.

4. Cause failure of any other steam or feedwater line that could result in an uncontrolled blowdown of more than one steam generator.

5. Reduce flow capability of the Auxiliary Feedwater System below minimum requirements.

3.6.7.6.3 Postulated Break Locations

Figures 3.6.7-1 and 3.6.7-2 show the approximate routing of the main steam lines from each steam generator to the flued head anchors in the outside wall of each main steam valve room. Also shown in these figures are locations of the break points postulated for each main steam piping run considered in this report. Table 3.6.7-1 shows the combined stress values for the postulated main steam line ruptures. (Note: The stress values listed are for example and historical purposes only)

3.6.7.6.4 Protective Measures

Pipe rupture restraints, sleeves, and jet deflectors are used to mitigate the consequences of postulated main steam line ruptures.

Figures 3.6.7-1 and 3.6.7-2 indicate the approximate locations and the type of mitigation component for each postulated break location.

Table 3.6.7-2 is a checklist showing that protection is provided for all unacceptable consequences of main steam line ruptures.

3.6.7.7 Main Feedwater

3.6.7.7.1 Description of Piping System

The feedwater system is designed to supply a sufficient quantity of feedwater to the steam generator secondary side inlet during all normal operating conditions.

The feedwater system delivers water to the steam generators at an elevated temperature and pressure. These lines are high energy from the feedwater pumps to the inlet of the steam generators.

The major portion of the feedwater piping evaluated herein is 16" OD lines designated as a TVA Class B system. The evaluated portion begins at the flued anchor at the exterior wall of the main steam room. The piping continues through the valve rooms (and isolation valves) and through guard pipes and bellows, penetrates the shield wall, the containment liner, crane wall, and terminates at the inlet of the steam generator. The piping termination at the Unit 2, Loops 2, 3, and 4 and Unit 1, Loops 1, 2, 3, and 4 steam generator feedwater nozzle is a specially designed elbow with an integral thermal liner for the purpose of mitigating thermal fatigue cracking. For further information regarding the elbow/liner, see Table 3.2.1-2. The piping termination at the Unit 2, Loop 1 steam generator feedwater nozzle is a short radius elbow without an integral thermal liner installed during the U2R18 outage in November 2012. As documented in 13.9.1 Appendix A, Section A.2.2.2, a fatigue analysis was performed on this elbow and the elbow has acceptable fatigue usage for the 40-year design cycles of the Replacement Steam Generator.

3.6.7.7.2 Protection Requirements

Same as Section 3.6.7.6.

3.6.7.7.3 Postulated Break Locations

Figures 3.6.7-1 and 3.6.7-2 show the routing of the feedwater lines from the steam generators to the flued head anchors in the exterior walls of the main steam valve rooms. Postulated break locations are shown in these figures for all feedwater ruptures considered herein. Table 3.6.7-3 shows the combined stresses of the main feedwater postulated break points. (Note: The stress values listed are for example and historical purposes only)

3.6.7.7.4 Protective Measures

Pipe rupture restraints, sleeves, and jet deflectors are used to mitigate the consequences of postulated main feedwater line ruptures.

Figures 3.6.7-1 and 3.6.7-2 indicate the approximate locations and the type of mitigation component for each postulated break location.

Table 3.6.7-2 is a checklist showing that protection is provided for all unacceptable consequences of main feedwater ruptures.

3.6.8 Welds

Welding for pipe rupture mitigative structures designed to the requirements of AISC was in accordance with the American Welding Society (AWS), "Structural Welding Code," AWS D1.1-72 as implemented by TVA General Construction Specification G-29C. Nuclear Construction Issues Group documents NCIG-01, Revision 2, may be used after June 26, 1985, to evaluate weldments that were designed and fabricated to the requirements of AISC/AWS. When invoked, NCIG provisions will be implemented as follows:

1. An engineering evaluation of the structures will be performed and documented to determine that the provisions of NCIG-01 are consistent with the engineering considerations used for the design basis.

2. The applicability of the NCIG documents will be specified in controlled design output documents such as drawings and construction specifications.

3. Inspectors performing visual weld examination to the criteria of NCIG-01 will be trained in the subject criteria. Training of inspectors will be documented.

3.6.9 Reference

1. U.S. NRC Generic Letter 87-11 "Relaxation in Arbitrary Intermediate Pipe Rupture Requirements," June 19, 1987.

2. "Elimination of Primary Loop Pipe Breaks, General Design Criterion 4 (Tac Nos. 72829/72830) - Sequoyah Nuclear Plant Units 1 and 2" dated July 19, 1989 (A02890724007) enclosure Safety Evaluation Report.

3. "Technical Justification for Eliminating Large Primary Loop Pipe Rupture as the Structural Design Basis for Sequoyah Units 1 and 2," WCAP - 12011 (Proprietary), WCAP - 12012 (Non-Proprietary), October 1988, including WCAP-12011 (Proprietary), Addendum 1, Revision 1.

TABLE 3.6.1-1 (Sheet 1)

PIPING SYSTEMS INSIDE CONTAINMENT WHERE
ENERGY CLASSIFICATIONS DIFFER FROM
REGULATORY GUIDE 1.46 DEFINITION

LINE DESCRIPTION	LINE SIZE (in inches)	PRESSURE lb/in^2 a	TEMPERATURE °F
AUXILIARY FEEDWATER SYSTEM			
Motor Driven Auxiliary Feed Pump Discharge Lines			
Valve room wall to check valve 3-832	4	1650	70
Containment penetration to check valve 3-922	4	1650	120
Containment penetration to check valve 3-921	4	1650	120
Valve room wall to check valve 3-833	4	1650	70
Valve room wall to check valve 3-873	4	1650	70
Valve room wall to check valve 3-874	4	1650	70
CHEMICAL AND VOLUME CONTROL SYSTEM			
Normal charging line from containment penetration to regenerative heat exchanger	3	2700	130
*Auxiliary spray line from/including FCV 62-84 to check valve 62-661	2	2700	500
Sealwater injection from containment penetration to check valve 62-560	2	2700	120
Sealwater injection from/including check valve 62-560 to RCP-1	2	2700	120
Sealwater injection from containment penetration to check valve 62-561	2	2700	120
Sealwater injection from/including check valve 62-561 to RCP-2	2	2700	120
Sealwater injection from containment penetration to check valve 62-562	2	2700	120
Sealwater injection from/including check valve 62-562 to RCP-3	2	2700	120
Sealwater injection from containment penetration to check valve 62-563	2	2700	120
Sealwater injection from/including check valve 62-563 to RCP-4	2	2700	120
RESIDUAL HEAT REMOVAL SYSTEM			
*RHR supply from FCV 74-1 to/including FCV-74-2	14	450	310
*RHR supply from FCV 74-2 to containment penetration	14	450	310
*From 14" RHR suction to relief valve 74-505	3	450	310

TABLE 3.6.1-1 (Sheet 2)

PIPING SYSTEMS INSIDE CONTAINMENT WHERE
ENERGY CLASSIFICATIONS DIFFER FROM
REGULATORY GUIDE 1.46 DEFINITION

LINE DESCRIPTION	LINE SIZE (in inches)	PRESSURE lb/in^2 a	TEMPERATURE °F
SAFETY INJECTION SYSTEM			
RHR/SIS Cold Leg Injection			
Containment penetration to 8" x 6" reducers, loop Nos. 1 and 4	8	700	120
From 8" x 6" reducer to check valve 63-633	6	700	120
From 8" x 6" reducer to check valve 63-635	6	700	120
Containment penetration to 8" x 6" reducers, loop Nos. 2 and 3	8	700	120
From 8" x 6" reducer to check valve 63-632	6	700	120
From 8" x 6" reducer to check valve 63-634	6	700	120
Containment penetration to 4" x 2" reducers, loop Nos. 1 and 4	4	700	120
From 4" x 2" reducer to check valve 63-551	2	700	120
From 4" x 2" reducer to check valve 63-553	2	700	120
From 4" x 2" reducer to check valve 63-555	2	700	120
From 4" x 2" reducer to check valve 63-557	2	700	120
Containment penetration to check valve 63-581	3	2300	120
From/including check valve 63-581 to 3" x 2-1/2" reducers, loop Nos. 2 and 3, and 3" x 1-1/2" reducers, loop Nos. 1 and 4	3	2300	120
From 3" x 2-1/2" reducer to 2-1/2" x 1-1/2" reducer	2-1/2	2300	120
From 3" x 1-1/2" reducer to check valve 63-586	1-1/2	2300	120
From 3" x 1-1/2" reducer to check valve 63-589	1-1/2	2300	120
From 2-1/2" x 1-1/2" reducer to check valve 63-587	1-1/2	2300	120
From 2-1/2" x 1-1/2" reducer to check valve 63-588	1-1/2	2300	120
LHSI From containment penetration to 12" x 8" reducers, loop Nos. 1 and 3	12	2300	120
From 12" x 8" reducer to check valve 63-640	8	2300	120
From/including check valve 63-640 to 8" x 6" reducer	8	2300	120
From 8" x 6" reducer to check valve 63-641	8	2300	120
From 12" x 8" reducer to check valve 63-643	8	2300	120
From/including check valve 63-643 to check valve 63-644	8	2300	120
SI from containment penetration to 4" x 2" reducers, loop Nos. 1 and 3	4	2300	120
From 4" x 2" reducer to check valve 63-543	2	2300	120
From/including check valve 63-543 to 8" LHSI line, loop No. 1	2	2300	120

TABLE 3.6.1-1 (Sheet 3)

PIPING SYSTEMS INSIDE CONTAINMENT WHERE
ENERGY CLASSIFICATIONS DIFFER FROM
REGULATORY GUIDE 1.46 DEFINITION

LINE DESCRIPTION	LINE SIZE (in inches)	PRESSURE lb/in^2 a	TEMPERATURE °F
SAFETY INJECTION SYSTEM			
From 4" x 2" reducer to check valve 63-545	2	2300	120
From/including check valve 63-545 to 8" LHSI line, loop No. 3	2	2300	120
SI from containment penetration to 4" x 2" reducers, loop Nos. 2 and 4	4	2300	120
From 4" x 2" reducer to check valve 63-547	2	2300	120
From/including check valve 63-547 to check valve 63-559	2	2300	120
From 4" x 2" reducer to check valve 63-549	2	2300	120
From/including check valve 63-549 to check valve 63-558	2	2300	120
REACTOR COOLANT SYSTEM			
Coolant drain from globe valve 68-549 to/including globe valve 68-550	2	2300	120
Coolant drain from globe valve 68-553 to/including globe valve 68-554	2	2300	120
Coolant drain from globe valve 68-581 to/including globe valve 68-582	2	2300	120
Coolant drain from globe valve 68-557 to/including globe valve 68-558	2	2300	120
*From safety valve 68-563 to 12" pressurizer relief tank header	6	2300	610
*From safety valve 68-564 to 12" pressurizer relief tank header	6	2300	610
*From safety valve 68-565 to 12" pressurizer relief tank header	6	2300	610
*From relief valve PCV 68-334 to 6" relief valve header	3	2300	610
*From relief valve PCV 340-A to 6" relief valve header	3	2300	610
*Relief valve header to 12" pressurizer relief tank header	6	2300	610
*Pressurizer relief tank header to pressurizer relief tank	12	2300	610

*TVA has classified these lines as low-energy lines because they operate at the conditions listed less than 1% of the plant operating life.

TABLE 3.6.2-1

Postulated New Design Basis Break Locations for the LOCA Analysis of the Primary Coolant Loop per WCAP-8172 as Eliminated by LBB per WCAP-12012 (See Figure 3.6.2-1)

Location of Postulated Rupture	Type	Break Opening Size
(Loc. 9) Residual Heat Removal (RHR) Line/Primary Coolant Loop Connection (14" -Sch. 160, on Loop 4, Hot Leg)	Guillotine (reviewed from the RHR line)	Cross-Sectional Flow Area of the RHR line
(Loc. 10) Accumulator (ACC) Line/Primary Coolant Loop Connection (10" -Sch. 140, on Loops 1, 2, 3, & 4, Cold Legs)	Guillotine (reviewed from the ACC line)	Cross-Sectional Flow Area of the ACC line
(Loc. 9) Pressure Surge (PS) Line/Primary Coolant Loop Connection (14" -Sch. 160, on Loop 2, Hot Leg)	Guillotine (reviewed from the PS line)	Cross-Sectional Flow Area of the PS Line

Hydraulic models are used to generate time-dependent hydraulic forcing functions used in the analysis of the reactor coolant loop for each break size.

TABLE 3.6.7-1

SUMMARY OF COMBINED STRESSES AT BREAK LOCATIONS
FOR MAIN STEAM LINES

Piping for Steam Generator	Break Location Joint No.	Combined Stress lb/in^2	Type Break
	S1-1	18,800	Terminal end
No. 1 (Figure 3.6.7-1)	S1-4	11,810	Terminal end
	S2-1	17,830	Terminal end
No. 2 (Figure 3.6.7-2)	S2-4	27,980	Terminal end
	S3-1	19,190	Terminal end
No. 3 (Figure 3.6.7-2)	S3-4	18,350	Terminal end
	S4-1	19,060	Terminal end
No. 4 (Figure 3.6.7-1)	S4-4	12,060	Terminal end

Note: $0.8\ (S_h + S_A) = 35{,}000$ lb/in^2

All breaks are circumferential.

* Postulation of an arbitrary intermediate break is no longer required per reference 1 in section 3.6.9 and as noted in section 3.6.2.2.5 of this document. This break and any attendant devices designed solely to mitigate this break may be deleted on a future date based upon TVA's judgment that the action would result in enhanced plant operability or maintainability or reduced worker radiation exposure (where applicable).

TABLE 3.6.7-2

CHECKLIST OF PROTECTION PROVIDED AGAINST UNACCEPTABLE CONSEQUENCES OF MAIN STEAM AND FEEDWATER LINE RUPTURES

	Systems Analyzed							
	Main Steam Loops				Main Feedwater Loops			
Unacceptable Event	1	2	3	4	1	2	3	4
Prevent loss-of-coolant accident	X	X	X	X	X	X	X	X
Prevent the loss of essential safety systems	X	X	X	X	X	X	X	X
Prevent the blowdown of more than one steam generator	X	X	X	X	X	X	X	X
Isolate feed to affected steam generator	X	X	X	X	X	X	X	X
Prevent blowdown through feedwater system after main steam line rupture	N/A	N/A	N/A	N/A	X	X	X	X
Prevent blowdown through main steam line after main feedwater rupture	X	X	X	X	N/A	N/A	N/A	N/A
Protect secondary pressure control	X	X	X	X	X	X	X	X
Protect auxiliary feedwater to three steam generators	X	X	X	X	X	X	X	X
Protect the pressure retaining integrity of the containment vessel	X	X	X	X	X	X	X	X
Protect jet impingement (and resulting ice condenser "melt-through") of critical crack on ice condenser lower inlet door	X	X	X	X	X	X	X	X

X - Indicates protection provided against unacceptable event.

NA - Not Applicable.

TABLE 3.6.7-3

SUMMARY OF COMBINED STRESSES AT BREAK LOCATIONS
FOR MAIN FEEDWATER LINES

Piping for Steam Generator	Break Location Joint No.	Combined Stress lb/in^2 Unit 1 (Unit 2)	Type Break
	F1-1	24,010 (23,165)	Terminal end
	F1-4	3,980 (894)	Terminal end
	F1-2	21,490 (22,264)	Intermediate *
No. 1 (Figure 3.6.7-1)	F1-3	17,650 (11,407)	Intermediate *
	F2-1	24,820 (18,008)	Terminal end
	F2-4	11,880 (1,023)	Terminal end
	F2-2	21,840 (17,144)	Intermediate *
No. 2 (Figure 3.6.7-2)	F2-3	17,330 (18,773)	Intermediate *
	F3-1	19,310 (18,827)	Terminal end
	F3-4	21,040 (2,392)	Terminal end
	F3-2	19,460 (16,835)	Intermediate *
No. 3 (Figure 3.6.7-2)	F3-3	17,600 (9,742)	Intermediate *
	F4-1	21,964 (18,109)	Terminal end
	F4-4	5,960 (8,105)	Terminal end
	F4-2	22,277 (24,783)	Intermediate *
No. 4 (Figure 3.6.7-1)	F4-3	23,985 (26,092)	Intermediate *

Note: $0.8\ (S_h + S_A) = 27{,}400\ lb/in^2$
All breaks are circumferential.

* See note on Table 3.6.7-1

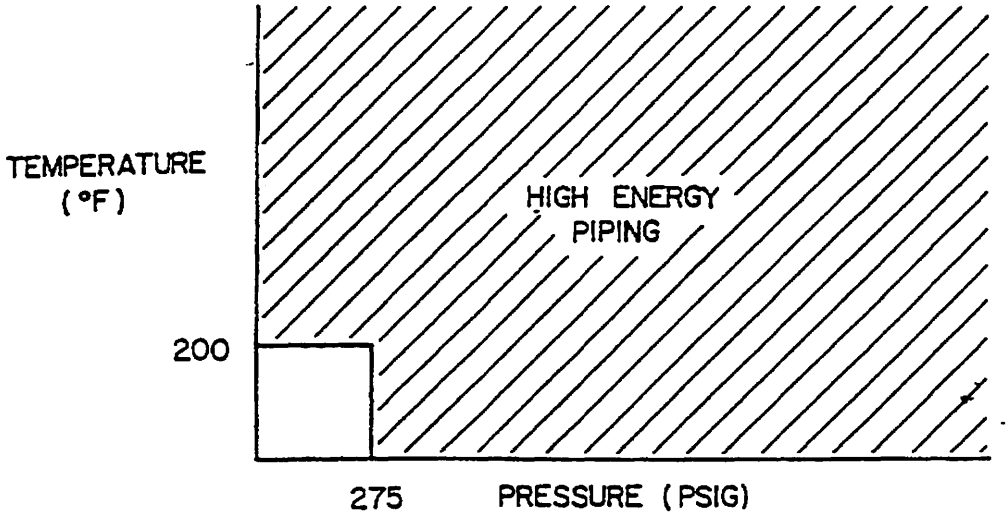

HIGH ENERGY CLASSIFICATION-PER REGULATORY GUIDE 1.46 DEFINITION

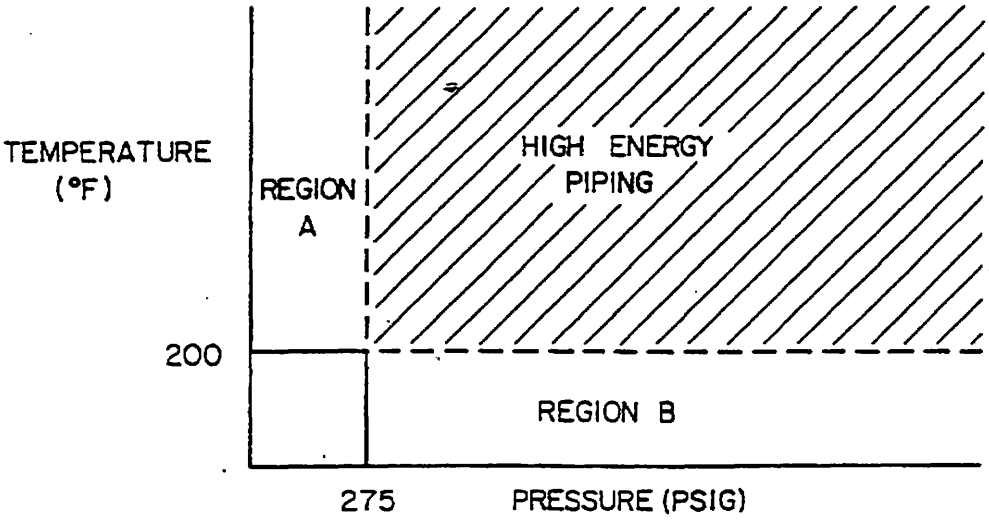

HIGH ENERGY CLASSIFICATION-PER SEQUOYAH NUCLEAR PLANT PIPE RUPTURE ANALYSIS DEFINITION.

FIGURE 3.6.1-1

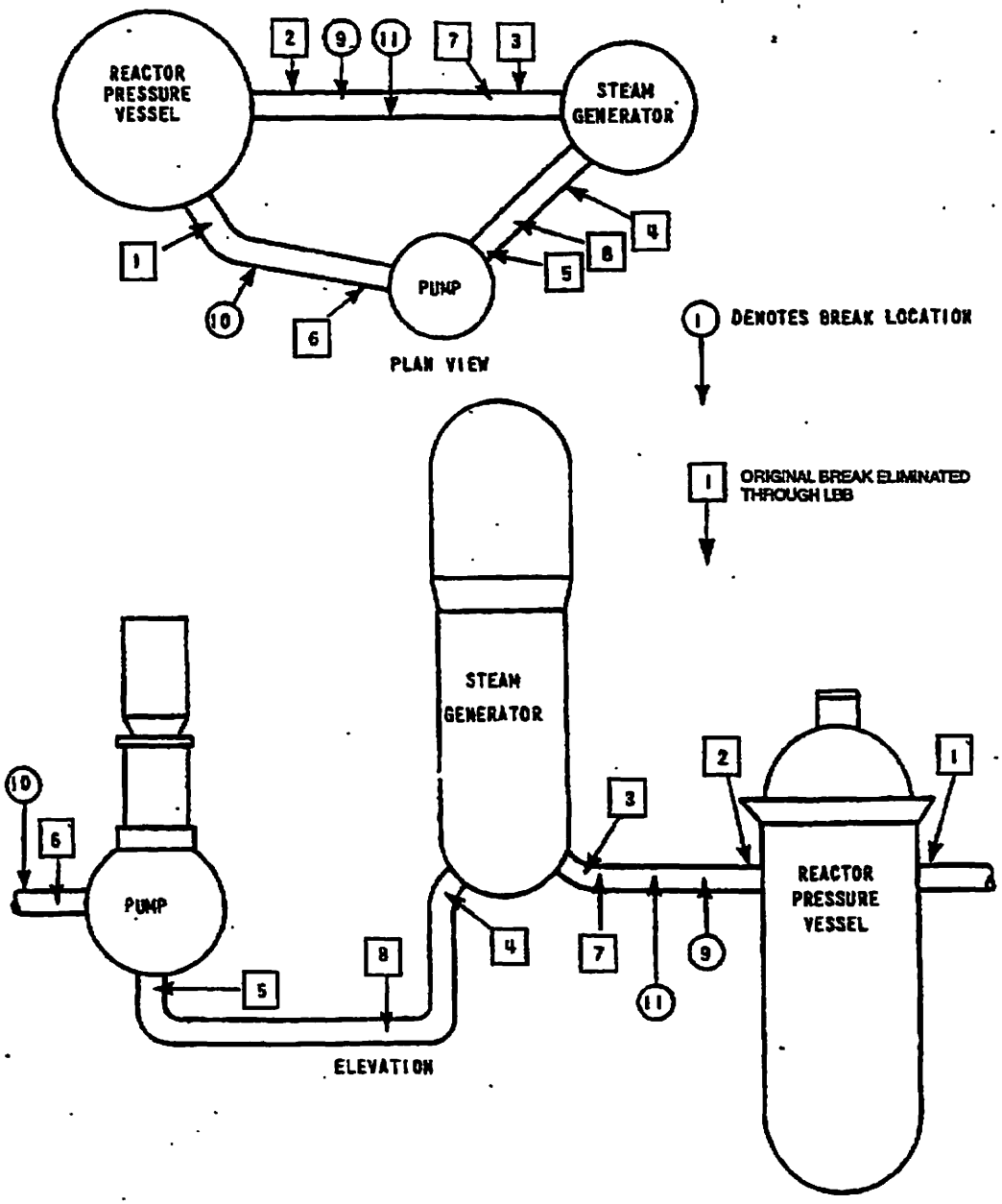

Figure 3.6.2-1
Locations of Original (Eliminated through LBB) and New Breaks

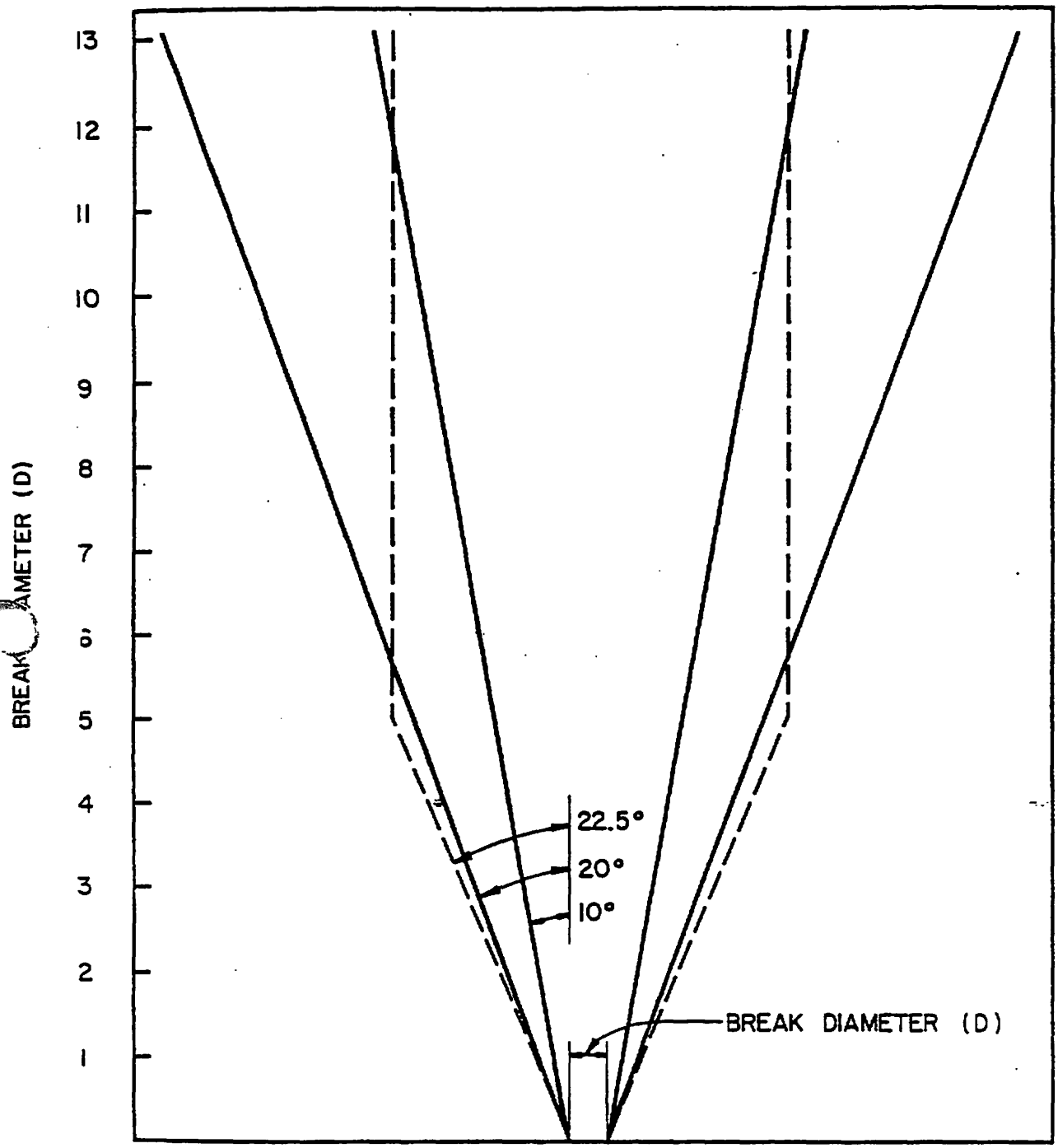

FIGURE 3.6.4-2 JET EXPANSION MODELS

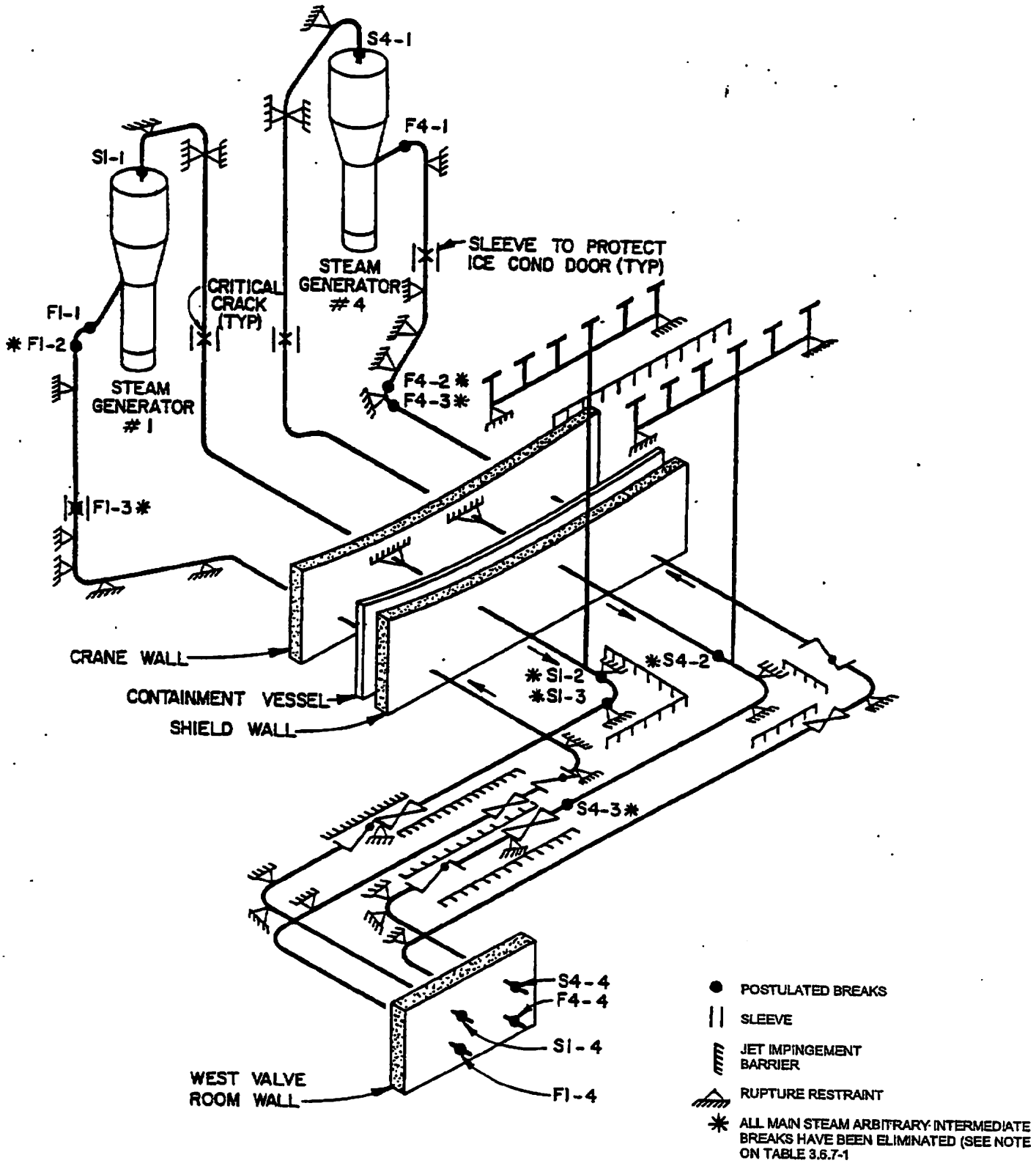

FIGURE 3.6.7-1

STEAM GENERATORS 1 AND 4 POSTULATED BREAK LOCATIONS AND FIXES

Revised by Amendment 18

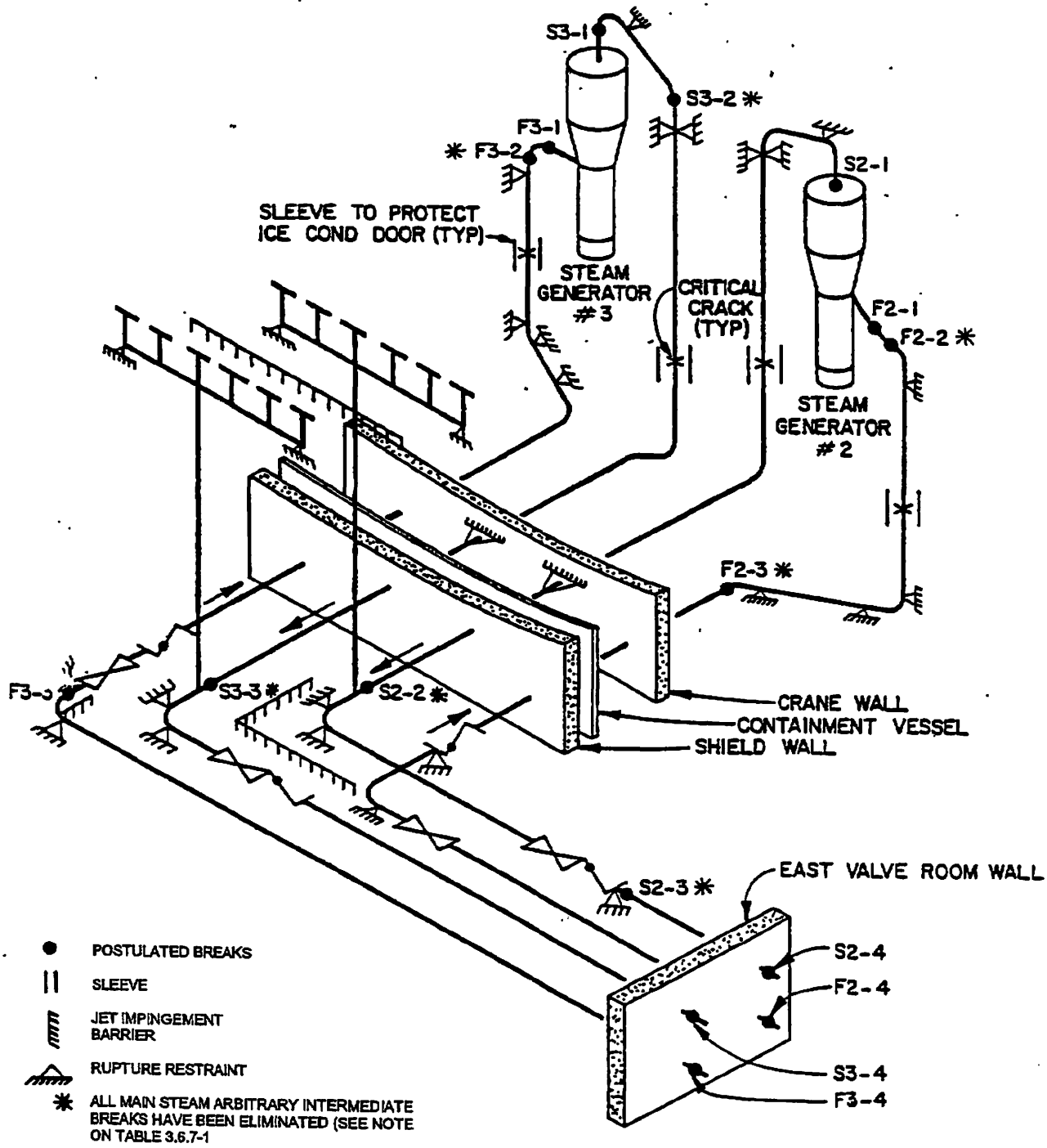

FIGURE 3.6.7-2

STEAM GENERATORS 2 AND 3 POSTULATED BREAK LOCATIONS AND FIXES

Revised by Amendment 18

3.7 SEISMIC DESIGN

3.7.1 Seismic Design for Structures

Structures for which this seismic design is applicable are listed in Table 3.7.1-1. The structures shown in Table 3.7.1-1 were included in the original plant design. All of these structures were analyzed and designed according to the same criteria.

3.7.1.1 Design Response Spectra

See Section 2.5.2.4 for the discussion and description of the design response spectra.

3.7.1.2 Design Response Spectra Derivation

See Section 2.5.2.4 for discussion of derivation of the response spectra. The system period intervals at which the spectra of the four artificial earthquakes were calculated are listed in Table 3.7.1-2.

3.7.1.3 Critical Damping Values

Table 3.7.1-3 lists the damping ratios used for the dynamic analyses of Category I structures shown in Table 3.7.1-1 and for the systems and components in these structures. Soil damping is also included in Table 3.7.1-3. For applicable stress criteria see Section 3.8.

3.7.1.4 Bases for Site Dependent Analysis

A site dependent analysis was not used to develop the shape of the design response spectra. However, in response to NRC questions about the adequacy of the seismic basis, a site specific analysis was performed. 84th percentile spectra were developed for this site specific analysis. The 84th percentile spectra were used to verify the adequacy of the seismic design for the major Category I structures. See Section 2.5.2.4 for the design response spectra.

3.7.1.5 Soil-Supported Category I Structures

Table 3.7.1-1 lists all Category I structures which were included in the original design of the plant. Table 3.7.1-4 lists all of the soil-supported Category I structures which are listed in Table 3.7.1-1. This table lists the structures with the depth of soil over bedrock. Pile- and caisson-supported Category I structures of Table 3.7.1-1 are listed in Table 3.7.1-5.

3.7.1.6 Soil Structure Interaction

For Category I structures (see Table 3.7.1-1) founded upon soils the rock motion was amplified to obtain the ground surface motion by considering the soil deposit as an elastic medium and making a dynamic analysis of a slice of unit thickness using only the horizontal shearing resistance of the soil. The four artificial earthquakes mentioned in Section 2.5.2.4 were considered as the input motion at the top of rock. Once the time history of surface accelerations was known, a response spectrum was produced for the analysis of the soil-supported structure.

The vertical surface motion was obtained by amplifying two-thirds of the horizontal rock motion vertically through the soil column as mentioned above.

The soil amplification analysis is affected by the accuracy of in situ soil measurements, slanted soil layers, soil density variations, and depth of the soil deposit. Therefore, for structures supported on a soil deposit with variations in properties and depths of the soil deposit beneath the structure, parameters were varied to obtain different ground motion spectra. An envelope was drawn from these spectra resulting in the final ground motion spectrum used in analyzing the structure. The soil supported structures were analyzed using the lumped mass and soil spring model shown schematically in Figure 3.7.1-1.

By doing the above for soil-supported structures, the maximum amplification of the ground response was obtained and the peak width of the ground response spectrum was wide enough to allow for variations in the frequencies of the structure due to variations in soil parameters.

For the rockfill dike near the ERCW Pump Station, as shown in Figure 3.7.1-2, the soil amplification was computed using a two dimensional finite element program. The four artificial earthquakes mentioned in section 2.5.2.4 were used as the input motion at the top of rock: The properties of the model were varied to envelope the variation of the soil and rockfill properties. The output (accelerations, stresses, strain, etc.) from the four earthquake analyses for each material variation were averaged. The averaged output for each material variation were compared and the maximum output was used in the stability analysis of the dike (refer to Paragraph 2.5.6.2.3).

3.7.2 Seismic System Analysis

The analysis of Category I systems and components is accomplished, where applicable, using the response spectra or time-history approach (Refs. 10, 11, 12) which utilizes the natural period, mode shapes, and appropriate damping factors of the particular system. Where analytical methods of analysis do not produce results of a sufficient confidence level, dynamic testing of equipment is used to ensure functional integrity. The seismic analysis methods used for the Category I structures, systems, and components are covered in this section.

3.7.2.1 Category I Systems and Components Supplied by Westinghouse/Framatome

An important step in the seismic analysis of Category I systems is the procedure used for modeling. The system is represented by lumped masses and a set of springs idealizing the stiffness properties of the system. Modeling techniques are presented in References 13 and 22.

3.7.2.1.1 Category I Piping Supplied by Westinghouse

The seismic response of Seismic Category I piping and components within Westinghouse scope of responsibility is determined as part of a multidegree of freedom model which includes the support characteristics. This model is a multimass mathematical representation of the system. A sufficient number of masses are included to ensure an accurate determination of the dynamic response.

Horizontal and vertical seismic envelope spectra are prepared which encompass the floor response spectra at the elevations where the piping system attaches to the building structure. The system is analyzed for the simultaneous occurrence of these horizontal and vertical seismic input motions. The results for the vertical excitation are added directly to the results for north-south and east-west excitations. The larger of the two values so determined at each point in the model is considered as the earthquake response. The envelope spectra are compared with the horizontal and vertical floor response spectra developed from the building time-history analyses to assure conservatism of the spectra used.

3.7.2.1.2 Seismic Analysis of Reactor Vessel Internals

A standard Reactor Building with the reactor vessel support, the standard four loop plant reactor vessel, and the reactor internals are included in the multimass mathematical model used to determine the dynamic response of the reactor internals. The mathematical model of the building, attached to rock, is similar to that used to evaluate the building structure. The reactor internals are modeled as a single degree of freedom system for vertical earthquake analysis, since previous analyses have shown that this is its behavior. The reactor internals are mathematically modeled by beams, concentrated masses, and linear springs for horizontal earthquake analysis.

All masses, water, and metal are included in the mathematical model. All beam elements have the component weight or mass distributed uniformly, e.g,, the fuel assembly mass and barrel mass. Additionally, wherever components are attached uniformly their mass is included as an additional uniform mass, e.g., baffles and formers acting on the core barrel. The water near and about the beam elements is also included as a distributed mass. Horizontal components are considered as a concentrated mass acting on the barrel. This concentrated mass also includes components attached to the horizontal members since these are the media through which the reaction is transmitted. The water near and about these separated components is considered as being additive at these concentrated mass points.

The concentrated masses attached to the barrel represent the following:

1. The upper core support structure, including the upper vessel head and one-half the upper internals;

2. The upper core plate, including one-half the thermal shield and the other half of the upper internals;

3. The lower core plate, including one-half of the lower core support columns;

4. The lower one-half of the thermal shield;

5. The lower core support, including the lower instrumentation and the remaining half of the lower core support columns.

The modulus of elasticity is chosen at its hot value for the three major materials found in the vessel, internals, and fuel assemblies. In considering shear deformation, the appropriate

cross-sectional area is selected along with a value for Poisson's ratio. The fuel assembly moment of inertia is derived from experimental results by static and dynamic tests performed on fuel assembly models. These tests provide stiffness values for use in this analysis. The fuel assemblies are assumed to act together and are represented by a single beam. Figure 3.7.2-1 shows the mathematical model used.

The analysis is performed for the simultaneous occurrence of horizontal and vertical seismic input motions. The results for the vertical excitation are added directly to the results for north-south and east-west excitations. The larger of the two values so determined at each point in the model is considered as the earthquake response.

The first mode of vibration of the reactor internals obtained from the eigenvalue- eigenvector solution using the model of Figure 3.7.2-1 is shown in Figure 3.7.2-2. The response of the internals is obtained by adding the maxima of the responses for each mode or by taking the square root of the sum of their squares (SRSS).

The results obtained from the linear analysis indicate that during an earthquake, the relative displacements between the components may close the gaps and consequently the structures can impinge on each other. It is clear that linear analysis does not provide information about the impact forces generated when components impinge each other, but has the advantage of simplicity and provides information about the natural frequency of the system. Therefore, for those cases where components would be expected to impinge each other, linear analysis is applied but the gaps are conservatively treated as being closed. Reference 15 provides further details.

The criterion for normal plus 1/2-SSE loadings is that the stresses are limited to those given by the ASME Nuclear Power Plant Components Code for upset conditions. These limits are intended to assure that the reactor will be able to continue or resume operation. For the normal plus SSE and the normal plus SSE plus DBA loading conditions, the criterion for acceptability in regard to mechanical integrity analyses is that adequate core cooling and core shutdown must be assured. This implies that the deformation of the reactor internals must be sufficiently small so that the geometry remains substantially intact. Consequently, the limitations established on the internals are concerned principally with the maximum allowable deflections and/or stability of the parts. The deflections caused by the SSE are small in comparison to those caused by the DBA. Accordingly, faulted limits for the internals are covered in Section 3.9.3.

3.7.2.1.3 Seismic Analysis of Ice Condenser

Linear Seismic Analysis

The lattice frame-ice basket-lower support structural assembly is modeled as an interconnected system without gaps. A linear elastic dynamic analysis is performed using the response spectra defined for the site.

Each level of lattice frames encompasses an approximate 300 degree horizontal arc and consists of 72 lattice frames. One level of eight levels of lattice frames was modeled so that the structural coupling between individual lattice frames could be evaluated.

The dynamic model used to determine the horizontal response characteristics of one level of lattice frames is shown in Figure 3.7.2-3. It is a lumped mass beam representation. Cantilever beam elements are used to represent the bending and shear stiffness of six interconnected lattice frames as shown in Figure 3.7.2-4. For the model shown in Figure 3.7.2-3, the mass associated with a set of six lattice frames is lumped at the end of the cantilever beam. The length used for the cantilever beam is representative of the distance to the center of gravity of the ice baskets associated with one lattice frame. The lumped masses are connected by tie members representing the combined coupling stiffness of six lattice frames.

In order to determine proper lattice frame stiffness, the lattice frame structure was modeled in detail using the finite element computer code STRUDL. A typical model of the lattice frame is shown in Figure 3.7.2-5. The wall panel is represented by stiffness elements in the model. Therefore, the stiffness values determined include the effect of the wall panel.

A Westinghouse computer program was used to obtain the dynamic response characteristics of one level of lattice frames. It was determined that the structural coupling between individual lattice frames is negligible and that the fundamental response of the ice bed-lattice frame is essentially that of the individual lattice frames acting independently. Therefore, a lattice frame can be uncoupled from those in its same level for modeling purposes.

A multilevel horizontal dynamic model is used to obtain the horizontal seismic response of the lattice-frame ice basket assembly. This model is shown in Figure 3.7.2-6. Each level is represented by one lattice frame. Their stiffness properties are introduced into the model using stiffness element. The ice baskets are lumped in groups of nine and represented by lumped mass beam elements. A response spectra analysis was done using a computer program which performs conventional modal analysis. The model was analyzed for out-of-plane as well as in-plane motion to give tangential and radial loads, respectively.

Non-linear Seismic Analysis

A clearance or gap is required at the ice basket supports for installation and maintenance reasons. A schematic view of the ice basket gap is shown in Figure 3.7.2-7. The design value for the gap is 1/4 inch radially or 1/2 inch on the diameter.

The effect of the gap during a seismic excitation is two fold. First, impact loads will be applied to the ice basket as it bounces within the clearance, which produce higher loads in the ice basket than would exist if there were no gap. Second, the repetitive impacting at the ice basket supports will dissipate substantial amounts of energy. Stated differently, there will be higher damping within the structure than would exist if there were no gaps. This effect is illustrated with actual test results in Figure 3.7.2-8.

Analytical Procedure and Typical Results

Using typical results obtained from the non-linear dynamic model, the procedure used in the nonlinear analysis will now be discussed. First, the input acceleration time histories are converted to displacement time histories by double integration as shown in Figures 3.7.2-9 through 3.7.2-11. The displacement time histories were then input to the non-linear dynamic model. Results are shown in Figures 3.7.2-12 through 3.7.2-14 for the case corresponding to a 1/2-inch gap between the ice basket and lattice frame for tangential excitation.

Figure 3.7.2-12 shows the output displacement time history of the ice basket mass superimposed on the input displacement. It shows that the response generally follows the input displacements except for some amplification in the neighborhood of the peaks.

Figure 3.7.2-13 shows the impact loads on the ice baskets for this particular case. Note the short duration time of the impact loads.

Figure 3.7.2-14 shows the forces induced in the wall panels on the crane wall side as obtained from the non-linear dynamic model.

Horizontal Seismic Response Spectra Analysis Parameters

The response spectra defined for the crane wall at elevation 773.0 were used for the analysis. Shown in Figure 3.7.2-6 is the relation of elevation 773.0 and the multilevel horizontal dynamic model. The response spectra associated with this elevation were used for the analysis because the lattice frames at this elevation have a full mass contribution associated with them and therefore these spectra are representative of the input motion to the major portion of the assembly.

The equipment damping values used were 5 percent for 1/2 SSE and 10 percent for SSE.

Time-History Dynamic Input

Crane wall seismic time histories for the 1/2 SSE and SSE in the east-west and north-south directions were developed using four synthesized earthquakes. These earthquakes are the same as used to develop the Sequoyah response spectra. These time histories were the actual earthquake records as modified by the building, i.e., as filtered through the building to the points of interest on the crane wall.

The structural response was computed for each earthquake and then averaged by computing the arithmetic mean of the four sets of response values. The seismic design loads are based on the seismic loads obtained by averaging. This procedure is consistent with the method used to develop the response spectra.

Design Load Verification Analyses

As noted previously, it has been found that the seismic loads obtained from the nonlinear dynamic model are in good agreement with the loads obtained from more complex beam models. For this reason the nonlinear dynamic model has been used as the basic model to develop the seismic design loads.

The non-linear dynamic model was analyzed with zero gap and the results compared to the response spectra modal analysis results. Satisfactory agreement was obtained between time history and response spectrum modal analysis as seen in Figures 3.7.2-15 through 3.7.2-22. The damping valves used were the same as discussed in Sections 3.7.2.1.3. As expected, the seismic load obtained from the time-history analyses was always greater than the response spectra seismic loads. Therefore, results from the time-history analyses are clearly conservative compared to the response spectra results.

Non-linear seismic results obtained using the nonlinear dynamic model are shown in Figures 3.7.2-15 through 3.7.2-30. Figures 3.7.2-15 through 3.7.2-22 are plots of the seismic wall panel load versus gap size for the radial and tangential case. Given in Figures 3.7.2-23 through 3.7.2-30 are plots of seismic impact load between basket and lattice frame versus gap size for the radial and tangential case.

The lattice frame wall panel stiffnesses are given in Table 3.7.2-1. These values are consistent with stiffnesses obtained from tests. The results shown were obtained using time histories associated with elevation 784.8 above the ice condenser structure.

Analyses were made using the non-linear dynamic model and time histories associated with elevations 784.8 and 773.0 on the crane wall so that the design loads developed would be based on the most conservative seismic response. It should be noted that the two highest points on the crane wall were used since they have the largest seismic response characteristics. Their response characteristics are slightly different which require that both time histories be used. The results obtained from the two sets of time histories were similar with slight variations.

The seismic design loads developed for the ice condenser structure were based on a nominal 1/2-inch diametral gap size. This design point is used since the ice baskets, as a whole, will in all probability respond closest to this point for a nominal diametral gap of 1/2 inch. Note that a resonance condition exists at a gap size of approximately 0.06 inch for the radial case which causes the seismic loads to increase. However, the increase is not significant since the load falls off rapidly with a small change in gap size. Furthermore, the gap size of 0.06 inch is nowhere near the design gap of 1/2 inch. In addition, the predicted seismic load obtained by averaging the four TVA earthquakes for the zero gap size is below the design load.

Note that the expected seismic loads, based on a nominal 1/2-inch gap, are well below the design loads established. These design loads were established by taking the maximum seismic loads using time histories at elevations 773.0 and 784.8 on the crane wall.

Summarized below are applicable dynamic behavior characteristics which have been determined from previous studies reported in Reference 9.

The wall panel loads determined for a 1/2-inch nominal gap were found to be unaffected by large changes in impact damping. Loads were imperceptibly different using 10 percent and 50 percent impact damping.

The excitation function used in the non-linear analyses is crane wall displacement. In order to obtain the time-displacement record, the acceleration is integrated twice. The validity of double integration of accelerations to displacements has been checked by double differentiation of the displacements back to acceleration. It was found that the peak accelerations agree within about 5 percent as shown in Figures 3.7.2-31 and 3.7.2-32.

As noted previously, the design loads were defined for a nominal 1/2-inch gap with all baskets in phase. In order to verify that misalignment of the baskets or partially stuck baskets do not produce higher seismic loads, verification analyses were performed. The conclusions reached are:

1. The effect of stuck baskets due to freeze over has been examined by varying the lattice frame and ice basket masses over a range of values. The nonlinear dynamic model was used for these studies. It was found that the wall panel load decreases with increasing freeze over.

2. The effect of vertical misalignment and stuck baskets was examined with the 12-foot beam model. A decrease of more than 15 percent of all panel load was obtained for the case of zero gap at the top and bottom of the basket and 1/2-inch gap at center.

The effect of sublimation as well as ice melt during and after DBA on the seismic loads has been evaluated. These studies have shown that the seismic loads are smaller than those determined without sublimation or ice melt. This is due to the reduced ice mass and an increased energy loss in the fracturing of ice. Thus, the case of SSE during and after a DBA is not a limiting condition. It should be further noted that after a DBA the ice in the lower portion of the ice condenser has been used and no longer exits. Thus, the seismic loads in the lower portion of the ice condenser are significantly reduced.

The above studies lend substantial support to the conclusion that the basis for seismic design load calculation is in fact correct. The complexity of the nonlinear analysis is such that it is quite important to be able to relate the results to physically intuitive behavior. The results from these verification analyses are relatable.

Use of Constant Vertical Load Factors

Vertical seismic response accelerations were established using two-thirds of the horizontal seismic response spectra.

The combined floor and lower support structure were modeled in the vertical direction. The full weight of the baskets and ice were considered. It was found that the fundamental frequency, the dominant mode of the combined structure in the vertical direction, is above 9 Hz. There is no amplification of the crane wall in the vertical direction at the elevation of the lower support structure. Therefore, the vertical response spectra at this elevation have the shape of the vertical ground response spectra. The seismic response of the lower support-ice basket-supporting floor structural system is based on the one dominant mode. A participation factor of 1.5 was applied to this mode.

Comparison of Responses

The lattice frames, ice baskets, wall panels on the crane wall side, and lower support of the ice condenser structure form a complex structural system. In order to perform a realistic seismic analysis of this structure, it was necessary to do response spectra modal analysis as well as

time-history analyses. It is not feasible to perform a response spectrum modal analysis when considering gaps because the structure is nonlinear, thus requiring a dynamic analysis. However, it is important to obtain a reasonable comparison between response spectra results and the results from the nonlinear analysis for zero gaps. Nonlinear time-history analyses were performed in order to evaluate the effects of the gaps which exist between the lattice frames and ice baskets.

Seismic Design Loads

Seismic design loads have been developed for the lattice frames, ice baskets, and the wall panels; and are shown in Figures 3.7.2-15 through 3.7.2-30.

The nonlinear analyses performed to develop seismic design loads used 2 percent structural damping and 10 percent impact damping, and a nominal gap size of 1/2 inch on the diameter between the baskets and the lattice frames. Crane wall seismic time histories associated with the top elevations of the ice condenser structure were used in these analyses. Damping values of 5 percent for 1/2 SSE and 10 percent for SSE were established for response spectrum analysis recognizing the influence of the gap.

Table 3.7.2-1 gives a summary of parameter ranges used in the seismic analyses. The parameter ranges are intended to be broad enough to encompass the final design parameters. As discussed in Chapter 6, the structural properties of the Ice Condenser System have been evaluated by tests and analysis.

Procedure Used to Lump Masses

The basic nonlinear dynamic analytical model used to develop the design loads was a two mass model shown in Figure 3.7.2-33. It is composed of two nonlinear elements which represent the local impact stiffness between the lattice frame and the ice basket and a spring representing the stiffness of the coupled lattice frame and wall panel. The two masses represent the lattice frame and 27 ice baskets of 6 foot length. This is the same model as described in Reference 9. An extensive detailed seismic analytical study has been performed, presented in Reference 9, to substantiate the use of the two mass model to develop seismic design loads for the Ice Condenser System. Five nonlinear dynamic models were used:

1. 2 mass model

2. 12-foot beam model

3. 9 mass radial phasing model

4. 3 mass tangential phasing model

5. 48-foot beam model

These models are fully described in Reference 9. It was concluded from these studies that the seismic loads obtained from the two mass model are in good agreement with the loads obtained from the more complex beam models. Therefore, the two mass model of Figure 3.7.2-33, hereafter referred to as the nonlinear dynamic model, has been used to develop seismic design loads for the Sequoyah Ice Condenser System.

3.7.2.1.4 Unit 1 and Unit 2 Reactor Coolant System Seismic Analysis Method with Replacement Steam Generators

Replacement of the Unit 1 and Unit 2 Steam Generators had the potential to significantly redistribute loads on the Steam Generator Primary Nozzles and Steam Generator Supports due to differences in the weight, center of gravity, shell geometry, and shell materials between the Original and Replacement Steam Generators. Therefore isolated mathematical models of the original Unit 1 and Unit 2 Steam Generators and the Unit 1 and Unit 2 Replacement Steam Generators were created and used to calculate loads on the Steam Generator Hot and Cold Leg Nozzles as well as the Steam Generator Upper and Lower Supports. The loads for the Replacement Steam Generators were compared to the loads for the Original Steam Generators in order to predict load and or stress increases as described in Sections 5.2.1.8. Natural frequencies of the Original and Replacement Steam Generators were calculated, and based on these results it was concluded that the Original and Replacement Steam Generators models were essentially the same dynamically. Section 5.2.1.8 describes the qualification method for the Unit 1 and Unit 2 Reactor Coolant System with Replacement Steam Generators.

3.7.2.1.5 Unit 1 and Unit 2 Replacement Steam Generator Seismic Analysis Modeling

A multi-mass RSG dynamic model was built for use in the RCS evaluation using the ANSYS general structures code, Version 5.5. It is a 3-dimensional model consisting of a six-mass beam model representing the RSG shell, upper and lower heads, nozzels and supports. Each lumped mass has X, Y, and Z mass inertia, and two lumped masses have rotary Y mass inertia, for a total of 20 dynamic degrees of freedom. The model conserves the total weight and CG of the RSG by transferring the tube bundle mass into the lumped shell masses. Since the RSG internals and shell are represented in this model as one series of beams rather than two series of co-axial beams, it is called a “one-stick” model. The six masses in the one-stick model maintain the total RSG weight and CG at normal operation (NOP).

The one-stick model was reduced from a more detailed two stick model of the RSG, in which the RSG tube bundle/shroud and the shell were represented as connected co-axial beams. The one stick model is further reduced when it is used in conjunction with the other RCS components in the RCS evaluation.

Figure 3.7.2-79 shows the one-stick model with details of the RSG supports. The RSG model origin is the RSG vertical centerline at 0.38” below the lower face of the lower support pads. The orientation of the model is as follows:

Global +X = horizontal from RSG vertical centerline to RV vertical centerline
Global +Y = up
Global +Z = orthogonal to X and Y

3.7.2.2 Category I Structures Listed

The seismic analyses of Category I structures were based upon dynamic analysis using the lumped mass normal mode method with idealized mathematical models. The inertial properties of the models were characterized by the mass, eccentricity, and mass moment of inertia of each mass point. Mass points were located at floor slabs, changes in geometry, and at intermediate points to accurately model the structure.

The stiffness properties were characterized by the moment of inertia, area, shear shape factor, torsion constant, Young's modulus, and shear modulus. All significant modes of vibration were considered in determining the total response. For structures with significant built-in asymmetry, coupled translation and torsion were considered. For the shield building an eccentricity of 5 percent of the diameter was assumed. For the steel containment vessel, actual eccentricities were calculated at various levels in the structure. The largest eccentricities were due to the personnel locks and equipment hatch and ranged up to 13 percent of the diameter. Structural response was calculated in both the east-west and north-south directions except where symmetry justified one direction.

Longitudinal (vertical) modes were computed for structures and their effects included in the structural response.

The response of Category I structures was computed by either the time-history modal analysis or the response spectrum modal analysis method. For the time-history method, the response (deflections, shears, etc.,) was calculated using four artificial earthquakes (Section 2.5.2.4) at a maximum integration interval of 0.01 second. Maximum values were calculated at each mass point for each earthquake and the arithmetically averaged response from the four earthquakes was used in the design.

For the response spectrum method, the modal response was computed in each component mode. The total response was found by taking the square root of the sum of the squares of the modal responses.

The response spectrum method was used only in calculating angular acceleration in asymmetric structures, for soil-supported structures, and for comparison with the results from the time-history method (e.g., see Section 3.7.2.3.10).

In computing seismic response, each of the two major horizontal directions of the structures were considered separately but simultaneously with the vertical direction. The moment, shear, and vertical load at the base of the structure due to earthquakes were used in combinations with other appropriate loads in determining overturning moments.

The response was calculated for the 1/2 SSE and the SSE except where the same percentage of critical structural damping was specified for both earthquakes. Where the 1/2 SSE and SSE structural damping are the same, response was calculated for the 1/2 SSE and/or the SSE (the SSE results equal twice the 1/2 SSE).

The damping ratios used in the dynamic analyses of the structures are shown in Section 3.7.1.3, Table 3.7.1-3.

3.7.2.2.1 Change in Elastic Modulus of Concrete

During the review cycle of final safety analysis report drafts for Section 3.7, Seismic Design, and Section 3.8, Design of Category I Structures, it was noted that the design strength given of the concrete mix for the Reactor Building interior concrete structure (both Units 1 and 2) was not the same as the design strength used in calculating the concrete elastic modulus used in the dynamic seismic analysis of this structure.

Additional investigation resulted in the determination that at the beginning of the design program for the Sequoyah plant, the specified design strength for the structure was the same as that used in calculating the elastic modulus. At some time later in the design program, but after completion of the dynamic seismic analysis, the design strength for the concrete mix was specified to be a higher value than that specified originally. This increase was not caused by the seismic analysis results but rather by high shear stresses at embedment anchorages for piping and equipment as a result of jet forces from pipe and equipment supports.

After the change in the design strength was made, it was not recognized at that time this change had implications on the previously completed seismic analysis of the interior concrete structure, with a consequent implication on the response of the structure as well as the response of all Category I piping and equipment anchored to this structure. As stated above, this discrepancy of design values was discovered during review of FSAR drafts.

During the course of the reanalysis of the Reactor Building, it was determined that for seismic analysis a modulus based on expected long-term concrete strengths would be more appropriate than an analysis based on 28-day design strengths (since we have found that continuing hydration does occur in the relatively massive concrete members associated with these structures). Modulus for seismic analysis should, therefore, be based on previous test experience for 180-day strengths with the fly-ash concrete using the ACI 318-63 Code formula in Section 1102.

This decision extended the problem to include all Category I structures since the 28-day specified strength was used in determining the concrete modulus for all of these structures in the original seismic analyses. Consequently, all Category I structures were examined and the Auxiliary Control Building and additional equipment buildings were included in the reevaluation. Information on the additional equipment buildings is presented in this section.

Table 3.7.2-2 lists all Category I structures and the reasons for exclusion of those not considered in the reevaluation.

The Reactor Building interior concrete structure, Auxiliary Control Building, and additional equipment buildings were evaluated for the revised structural responses. The revised structural responses were generally less than those used originally in the design of the structures, and the structures were found to be completely adequate.

The major effect on floor response spectra was a shift in the period at which peak response occurred, which corresponded to the shift in the natural period of the structure. The peak values remained essentially unchanged or reduced in some cases. This was caused primarily by fluctuations in the earthquake records used. This shift in the period of the peak, where significant, necessitated the reevaluation of all Category I equipment and piping supported or attached to the structures.

The effects of the revised moduli of elasticity of concrete on the seismic analyses of the Reactor Building interior concrete structures, Auxiliary Control Building, and the additional equipment buildings and the consequential effects on the structural response and equipment and piping systems have been thoroughly evaluated. The structures, equipment, and piping systems important to safety are adequate under the revised loadings.

All tables, where required, have been revised to reflect the change in modulus. The tables for those structures found to be unaffected as listed in Table 3.7.2-2 have not been revised.

3.7.2.2.2 Category I Rock-Supported Structures

Category I structures which are rock-supported are listed in Table 3.7.1-1. The in-situ measured shear wave velocity for the rock has an average value of 7000 ft/s. Based upon reference 4, buildings founded upon rock having this shear wave velocity may be considered to have a fixed base when performing analyses.

For structures surrounded by soil, the effect of the soil stiffness on the structural response was determined by replacing the soil with springs of equivalent stiffness. Due to seismic motion, the soil pressure against structures was increased above the static soil pressure. The magnitude of this increase was determined by using the shaking table experiments performed for the design of TVA's Kentucky hydro project (Reference 1). For a ground acceleration of 0.18 g, the static soil pressure was increased 46 percent for a dry fill and 22 percent for a saturated fill. This incremental increase was combined with the static pressure as a triangle of pressure whose apex is at the rock surface and maximum ordinate is at the ground surface. In addition to the soil pressure increase as described above for a saturated fill, the hydrostatic pressure of water within the fill was increased 22 percent. This incremental increase was combined with the static water pressure as a triangle of pressure whose apex is at the water surface and maximum ordinate is at the rock surface or bottom of structure. Calculations using the shaking table experiment results have been confirmed using information in Reference 8. A more detailed description of the seismic analyses of Category I rock-supported structures is discussed below.

Shield Building

Two separate, distinct analyses were performed on the reinforced concrete structure to determine the response of the structure to horizontal motion when modeled as a cantilever beam and the response of the dome to vertical motion when modeled as a shell.

The idealized lumped mass cantilever model of the structure is shown in Figure 3.7.2-34. The dome was considered a rigid body in this case and its weight added to mass point 25. The dynamic analysis was performed by the time-history modal analysis technique. Element and mass point properties used are shown in Table 3.7.2-6. Although no structural eccentricities exist in the building, the analysis considered accidental torsion effects with an eccentricity of mass of 5 percent of the diameter of the cylindrical shell. Periods for the normal modes of vibrations are listed in Table 3.7.2-7.

The in situ measured shear wave velocity for the rock under the Reactor Building has an average value of 7000 ft/s. Reference 4 states "it was noted that foundation media with a shear wave velocity of 6000 ft/s closely approximate a rigid foundation." The above, plus the fact that the base mat is anchored into the rock by grouted rock anchors, makes rocking of the building insignificant.

Vertical modes of vibration were calculated for comparison with the results for the dome as a shell. The rigid body simulation of the dome as performed in the analysis of the cantilever beam model does not provide an accurate representation of the response of the dome to vertical earthquake excitation. Thus, an analogy was developed using shell theory to determine the earthquake moments and forces in the dome. Figure 3.7.2-35 illustrates the logic performed in the analysis. The shell model is shown in Figure 3.7.2-36 The lumped mass model is shown in Figure 3.7.2-37.

The structural response for the cantilever and shell model was for both the 1/2 SSE and the SSE.

Response spectra were produced at selected points in the building for motion in the north-south, east-west, and vertical directions. As a minimum, these spectra were generated for damping ratios of 0.005, 0.01, and 0.02.

Interior Concrete Structure

The idealized lumped mass model of the reinforced concrete structure used in the dynamic earthquake analysis is shown in Figure 3.7.2-38. Element properties are given in Table 3.7.2-10 and mass-point properties in Table 3.7.2-11. The fixed base assumption was justified due to the magnitude of the shear wave velocity of the rock (7000 ft/s) as explained in Reference 4.

The dynamic earthquake analysis was performed by the time-history modal analysis technique. The results were computed for both the 1/2 SSE and SSE conditions. The effects of torsion and longitudinal motion were considered. Periods for the normal modes of vibrations are listed in Table 3.7.2-12.

Response spectra were produced at selected points in the building for motion in the north-south, east-west, and vertical directions. As a minimum, these spectra were generated for damping ratios of 0.005, 0.01, and 0.02.

Steel Containment Vessel

The dynamic analysis of the containment vessel was performed by the time-history modal

analysis method. The results were computed for the 1/2 SSE condition, and results for the SSE were obtained by doubling the values from the 1/2 SSE. The effects of torsion and longitudinal motion were considered. The idealized lumped mass model used in the analysis is shown in Figure 3.7.2-39. The element and mass-point properties are given in Tables 3.7.2-13 and 3.7.2-14, respectively. Periods for normal modes of vibration are listed in Table 3.7.2-15.

A dynamic shell analysis was made as an independent check on the results of the analysis treating the containment vessel as a lumped mass cantilever beam. The finite element model shown in Figure 3.7.2-40 was used in the shell analysis. It was found for seismic loads that both methods of analysis gave approximately the same results.

Response spectra were produced at selected points in the building for motion in the north-south, east-west, and vertical directions. As a minimum, these spectra were generated for damping ratios of 0.005, 0.01, and 0.02.

Auxiliary Control Building

The idealized lumped mass model of the reinforced concrete structure is shown in Figure 3.7.2-41. The fixed base assumption was again justified due to the magnitude of the shear wave velocity of the rock (7000 ft/s).

The dynamic analysis was performed by the time-history modal analysis technique. The results were computed for the SSE condition, and results for the 1/2 SSE were obtained by halving the values from the SSE. Element properties are given in Table 3.7.2-16 and mass point properties in Table 3.7.2-17. The effects of torsion and longitudinal motion were considered. Periods for the normal modes of vibrations are listed in Table 3.7.2-18.

Response spectra were produced at selected points in the building for motion in the north-south, east-west, and vertical directions. As a minimum, these spectra were generated for damping ratios of 0.005, 0.01, and 0.02.

Additional Equipment Buildings

Both Unit 1 and Unit 2 additional equipment buildings are reinforced concrete structures supported on rock. The idealized lumped mass models and sectional elevations are shown in Figures 3.7.2-42 and 3.7.2-43 for unit 1 and unit 2, respectively. Element properties which were used in the analysis are shown in Tables 3.7.2-19 and 3.7.2-20 for unit 1 and unit 2, respectively. The inertial properties of the structures are shown in Tables 3.7.2-21 and 3.7.2-22.

The dynamic analysis of each structure was done by the normal mode time-history method. A structural damping ratio of 0.05 was used for all modes of vibration for both the 1/2 SSE and SSE calculations.

The unit 1 structure is relatively symmetric in the north-south and east-west directions. Therefore, motion in these directions induces negligible torsion. The unit 2 structure is also relatively symmetric in the north-south direction. However, the unsymetrical conditions below elevation 706.0 in the east-west direction induce torsional responses in the structure for motion along this axis.

For both structures a study was conducted to determine the proper restraint conditions at the base for each direction of motion. In this study, an iterative procedure was used to determine the rocking spring constant at the base which corresponds to the actual base compression area. From this study, it was determined that the restraint conditions had an effect on the structural responses and the instructure response spectra only in the north-south direction for unit 2 when compared to the results for a fixed-base analysis. Therefore, for unit 2 in the north-south direction, the flexible base conditions were used to calculate the structural responses and the instructure response spectra.

An investigation of the stiffening effects of the exterior soil fill on the structural responses was conducted. The spring constants for the soil outside the structures were calculated from the dynamic modulus of the soil. Also, the additional stiffening effects from the soil fill below elevation 706.0 within each structure was investigated. It was found that the additional stiffening attributed to the soil from these two investigations had negligible effects on the structural responses.

The results of the dynamic analysis were computed for 1/2 SSE excitation; SSE response values can be obtained by doubling the 1/2 SSE values. The modal periods of motion and the corresponding participation factors for each direction of motion for both structures are listed in Tables 3.7.2-23 and 3.7.2-24. Floor response spectra in the north-south direction of motion for unit 2 are composite spectra which envelope the individual spectra generated for the extreme ranges of the transient base condition of the structure in this direction. Response spectra were produced at selected points in the building for motion in the north-south, east-west, and vertical directions. As a minimum, these spectra were generated for damping ratios of 0.005, 0.01, and 0.02.

Intake Pumping Station

The idealized lumped mass model of the reinforced concrete structure used in the analysis is shown in Figure 3.7.2-44. The results were computed for the 1/2 SSE condition, and results for the SSE were obtained by doubling these. Element properties are given in Table 3.7.2-25 and mass points properties in Table 3.7.2-26. The effects of longitudinal motion and soil restraint were considered. Periods for natural modes of vibration are listed in Table 3.7.2-27.

The structure was analyzed using the Uniform Building Code with the provisions of Zone 2 although at the time of design the plant was located in Zone 1. The results obtained from this analysis were used in the design of the structure.

ERCW Pumping Station

The idealized lumped mass model of the ERCW pumping station, opposite a sectional view of the actual structure, is shown in Figure 3.7.2-45. The seismic analysis was performed using the time-history modal analysis technique. The element properties are given in Table 3.7.2-28 and mass point properties in Table 3.7.2-29. Periods for the normal modes of vibration are listed in Table 3.7.2-30.

Results were computed for the 1/2 SSE condition and results for the SSE condition obtained by doubling these. Hydrodynamic effects of the water surrounding the structure at various elevations were considered using the Kentucky shaking table results (Reference 1). Response spectra were produced at selected points in the building for motion in the north-south, east-west, and vertical directions. As a minimum, these spectra were generated for damping ratios of 0.005, 0.01, and 0.02.

Intake Pumping Station - Retaining Walls

The reinforced concrete retaining walls were analyzed using a representative 1-foot-wide section considering the effects of the soil behind the walls and also as a freestanding wall. Both analyses indicated that the walls were rigid having the same accelerations as the rock on which they are supported.

The increased soil pressures due to the earthquake were obtained using the results from the shaking table experiments performed for the design of TVA's Kentucky hydro project (Reference 1).

Cells Providing Access to the ERCW Pumping Station

As shown in Figure 3.7.2-46 access to the ERCW pumping station is provided by a dike road, which is supported by several cofferdam cells adjacent to the pumping station. The cells are constructed of tremie concrete set in circular sheet pile forms and carry electrical conduits and mechanical piping internally. The cells are 32 feet, 7-1/2 inches in diameter and approximately 56 feet in height supported on rock.

Because the cells are constructed of tremie concrete and the geometric configuration of these cells, the design basis seismic analysis was based on the cells acting as a single unit. The analysis indicated a rigid body behavior. The seismic effects of the soil and water surrounding these cells were obtained by using the results from the shaking table experiments performed for the design of TVA's Kentucky hydro project (Reference 1).

Supplemental analyses were performed to demonstrate that an individual cell was inherently stable when subjected to the SSE. These analyses showed that the deflections at the level of the encased ERCW pipes were small and did not have an adverse effect upon the pipes.

Because of its proximity to the ERCW pumping station (Figure 3.7.2-46), the skimmer wall cell closest to the pumping station was seismically analyzed. Originally, the cell had a diameter of 22 feet with a height of about 60 feet. It is supported on rock and constructed of crushed stone contained by a sheet pile cell, capped by concrete at top and bottom. The seismic analysis revealed possible overturning problems with this cell. Therefore, the diameter of the cell has been increased to 45 feet to make it stable during both a 1/2 SSE and an SSE.

3.7.2.2.3 Category I Soil-Supported Structures

Category I structures which are soil supported are listed in Table 3.7.1-4. For structures founded on soil, the acceleration at top of rock was considered to be amplified through the soil

as discussed in Section 3.7.1.6. The translational and rocking soil springs included in the lumped mass model of the structure to characterize soil structure interaction were calculated using References 3, 5, 18, and 19. The damping ratio used for soil-supported structures depended upon the predominant type of motion as explained in Reference 3, 18, and 19.

A more detailed description of the seismic analyses of Category I soil- supported structures is discussed below.

Diesel-Generator Building

The idealized lumped mass model of the reinforced concrete structure used in the analysis is shown in Figure 3.7.2-47 Element properties are given in Table 3.7.2-31 and mass point properties in Table 3.7.2-32. The effects of horizontal translation and rocking of base were considered.

The predominate motion of the structures was a translatory rigid body motion. Motion of this type results in large damping; therefore, a damping ratio of 0.10 was used for the analysis. Longitudinal motion was also considered. Periods for the normal modes of vibrations are listed in Table 3.7.2-33. Response spectra were produced at selected points in the building for motion in the north-south, east-west, and vertical directions. As a minimum, these spectra were generated for damping ratios of 0.005, 0.01, and 0.02.

Refueling Water Tanks and Pipe Tunnels

The refueling water tanks are supported on a soil deposit. A ground motion spectrum was developed, as discussed in Section 3.7.1.6, to be used in the design of the refueling water tanks.

To address NRC concerns during the integrated design inspection, additional seismic analyses of the refueling water storage tank were performed. Lateral and rocking springs were calculated considering the effect of soil layering rather than the original elastic half-space assumption. Composite modal damping was used in combination with realistic soil damping (references 5, 18, and 19). A limitation of 10 percent composite modal damping was imposed for any individual mode.

The pipe tunnels leading from the Auxiliary Building to the refueling water and primary water tanks are in a soil deposit with an average depth of approximately 30 feet with the top of the tunnels being about 1.5 feet below the ground surface. Two methods were used to assess the earthquake effects on the tunnels.

First, the tunnels were assumed to have the same motion as the soil deposit. The soil deposit was analyzed as explained in Section 3.7.1.6. The accelerations obtained for the soil deposit at the level of the tunnel were used to calculate the inertia force per unit area on the tunnel, and also to calculate the increase in the static soil pressure using the shaking table experiments performed for the design of TVA's Kentucky hydro project (Reference 1).

In the second method, the tunnels were assumed to act as a free beam on an elastic foundation. The seismic response of the lumped mass beam on an elastic foundation was calculated and the maximum uniform loading acting on the sides of the tunnel was found.

The first method gave the most conservative results and was used in the seismic design of the tunnels.

Underground Electrical Concrete Conduit Banks

The underground electrical concrete conduit banks which lead from the Auxiliary Building to the Diesel Generator Building and the intake pumping station were seismically analyzed as described in Section 3.10.2.

The conduit banks leading to the ERCW pumping station were analyzed by the same method with the exception that those portions contained in the ERCW access dike were analyzed as described below.

ERCW Electrical Conduit Bank (in ERCW Access Dike)

The ERCW electrical conduit bank passes through the ERCW access dike parallel to and above the pile-supported piping slab discussed in Section 3.7.2.2.4. The bank is supported from the piping slab by concrete bents at intervals along the slab. Near the access dike-shoreline interface, the piping slab terminates. Beyond that point, the conduit bank is supported by pile-supported bents until the shoreline is reached. Cross sections of the access dike showing the relationship of the conduit banks and the piping slab are shown on Section C5-C5 of Figure 3.8.4-9. The location of the conduit bank along the longitudinal centerline of the access dike is shown on Section A5-A5 of Figure 3.8.4-9.

The electrical conduit bank was analyzed in the same manner as described in Section 3.7.2.2.4 for the ERCW piping slab. Unlike the piping slab, the conduit bank is a continuous structure. Therefore, the conduit bank is designed for the maximum curvature induced by the sinusoidal displacement profile.

The concrete support bent for the conduit bank is a simple frame structure which is structurally connected to the piping slab. For motion in the direction transverse to the access dike centerline, the bent is assumed to conform to the deformed shape of the dike in that direction. Forces in the bent are computed from that displaced shape.

The pile-supported bent is analyzed in the same manner as described in Section 3.7.2.2.4 for the pile supports for the piping slab. The bent consists of steel piles and a horizontal concrete beam on which the conduit bank rests. Forces in the bent are computed from the displaced shape imposed on it.

The conduit bank is analyzed vertically as a continuous slab supported at 30-foot intervals. No contact between the conduit bank and the rockfill under it is assumed. The slab is designed for the dead load of rockfill which it supports and the vertical acceleration of the dike.

Class IE Electrical Systems Manholes and Handholes

These manholes and handholes are rigid structures which have the same motion as the soil deposits where they are located. The soil deposits were analyzed as explained in Section 3.7.1.6. The accelerations obtained for the soil deposit at the level of the manholes and handholes were used to determine the inertia force on the structures and to calculate the increase in the static soil pressure using the shaking table experiments performed for the design of TVA's Kentucky hydro project (Reference 1).

3.7.2.2.4 Category I Pile- and Caisson-Supported Structures

Category I structures which are pile- and caisson-supported are listed in Table 3.7.1-5. For structures founded on piles, the acceleration at top of rock was considered to be amplified through the soil as discussed in Section 3.7.1.6. The translational and rocking foundation springs included in the lumped mass model of the structure to characterize soil-structure interaction were calculated using References 5 and 17. The damping ratio used for soil-supported structures depended upon the predominant type of motion as explained in Reference 3.

A more detailed description of the seismic analyses of Category I pile-supported structures is discussed below.

Waste Packaging Area

The Waste Packaging Building is a reinforced concrete structure adjacent to the east end of the Auxiliary Building. An expansion joint capable of permitting relative motion between the structures is provided. The foundation of the building consists of HP12x74 bearing piles driven through 30 feet of backfill material to refusal in sound rock.

The idealized lumped mass model of the structure used is shown in Figure 3.7.2-48. The element, mass point, and foundation spring properties are given in Tables 3.7.2-34, 3.7.2-35, and 3.7.2-36, respectively.

The response spectra used in the analysis of the soil- and pile-supported structure were obtained by amplifying the bedrock motion through the soil by linear analysis as prescribed in Section 3.7.1.6. The maximum horizontal acceleration at top of rock is 0.09 g and 0.18 g for the 1/2 SSE and SSE, respectively. The vertical acceleration at top of rock is taken as two-thirds of the horizontal. Four artificial earthquakes were used as input at top of rock. The results of this amplification indicates a peak in the response spectra at a period of approximately 0.1 second as shown in Figure 3.7.2-49.

Since the amount of settlement between the base slab and foundation media in the presence of the piles is difficult to determine, yet has major influence on the response of the structure, the degree of contact between the base slab, and the foundation media was taken to cause the worst conditions.

The soil springs were selected to provide a natural period of soil and pile structural system near the peak in the response spectrum.

The building is supported on a pile foundation to minimize settlement. This foundation, including the soil, was represented by rotational and translational springs. Two limiting cases were considered since the amount of contact between the base slab and the soil is difficult to determine, yet it has a major influence on the response of the structure. First, the stiffness of the foundation was determined assuming no contact between the base slab and the soil. This was accomplished by using a modulus of subgrade reaction approach (Reference 17) to evaluate the resistance to horizontal motion of piles supported in an elastic medium. The effect of pile group was taken into account in the evaluation of the subgrade modulus. This case yields a set of equivalent springs which are relatively flexible. For the second case, the effect of full contact between the base slab and soil was added to the results of the first case thereby setting a limit on the maximum stiffness of the foundation. The soil stiffness for the case of the base in full contact with the soil was computed using the procedures of Reference 5. From this analysis of varying the foundation conditions, it was determined that the natural periods of vibration fall to the right of the peak of the averaged ground response spectrum. Therefore, the soil properties which result in structural periods close to the region of peak amplification were used to determine the horizontal structural response.

The results of the analysis indicate a large portion of the structural displacement is due to base translation and base rotation. Since this corresponds to high damping in the soil, a modal damping of 10% was used. The horizontal response spectra at the base slab elevation for a modal damping of 10% is shown in Figure 3.7.2-49. The vertical response spectrum was taken as two-thirds of the horizontal rock response spectrum acting through the end bearing piles. As mentioned previously, the ground surface response spectrum was determined by a linear amplification of the bedrock motion. This response spectrum was broadened by ±10 percent in order to obtain a design response spectra. The broadened curve was used as input to the dynamic seismic analysis. The critical supporting condition in the vertical direction corresponded to the structure being pile supported only. This produced the softest supporting condition resulting in a period of 0.087 second and the largest vertical load in the structure.

Condensate Demineralizer Waste Evaporator Building

The Condensate Demineralizer Waste Evaporator Building is a reinforced concrete and steel structure adjacent to the additional Equipment Building and the waste-packaging area. Expansion joints capable of permitting relative motion between the structures are provided. The foundation of the building consists of HP12x74 bearing piles driven through 30 feet of backfill material to refusal in sound rock.

The dynamic earthquake analysis was performed using the normal mode time-history method. The idealized lumped mass model of the structure, piles, and soil is shown in Figure 3.7.2-50. The element, mass point, and foundation spring stiffness properties of the model are given in Tables 3.7.2-37, 3.7.2-38, and 3.7.2- 39, respectively. A damping ratio of 10 percent was used to represent the damping of the structure, piles, and soil system.

The earthquake motion used in the analysis was determined by amplifying four artificial earthquakes input at top of rock through the supporting soil. The maximum top-of-rock horizontal accelerations for these earthquakes are 0.09 g and 0.18 g for the 1/2 SSE and the SSE, respectively. The vertical motions are two-thirds of the horizontal.

The amplification of these earthquakes through the soil is performed by considering the soil as an elastic medium and making a dynamic analysis of a slice of unit thickness considering only the horizontal resistance of the soil (see Section 3.7.1.6). A damping ratio of 10 percent is used for the soil. From this analysis four corresponding top-of-ground earthquake motions are obtained for use as input to the structural model. The vertical motion at top of ground is assumed to be two-thirds of the horizontal motion.

The shear wave velocity of the soil is assumed to be approximately 1150 ft/s, which was determined from geophysical testing in and around the main plant area. Due to uncertainties in the determination of the soil properties, the shear wave velocity of the in situ soil is varied by + 30 percent when calculating the horizontal ground surface motions and when computing stiffness values for the translational and rotational soil springs of the lumped mass model. A comparison of the averaged response spectrum of the four artificial earthquakes for each of the shear wave velocity variations mentioned above with consideration of the frequency range of interest for response computations shows that the earthquake motions for a shear wave velocity of approximately 800 ft/s (-30 percent variation) is the most critical since it envelopes the averaged response spectra for the other variations. Therefore, only the top-of-ground time histories for a shear wave velocity of 800 ft/s were used in the subsequent computations of structural response and floor response spectra. The averaged ground response spectrum for this case exhibits a peak at a period of approximately 0.15 second, as shown in Figure 3.7.2-51 for the 1/2 SSE.

The building is supported on a pile foundation to minimize settlement. This foundation, including the soil, was represented by rotational and translational springs. Two limiting cases were considered since the amount of contact between the base slab and the soil is difficult to determine, yet it has a major influence on the response of the structure. First, the stiffness of the foundation was determined assuming no contact between the base slab and the soil. This was accomplished by using a modulus of subgrade reaction approach (Reference 17) to evaluate the resistance to horizontal motion of piles supported in an elastic medium. This case yields a set of equivalent springs which are relatively flexible. For the second case, the effect of full contact between the base slab and soil was added to the results of the first case thereby setting a limit on the maximum stiffness of the foundation. The soil stiffness for the case of the base in full contact with the soil was computed using the procedures of Reference 5. From this analysis of varying the foundation conditions, it was determined that the natural periods of vibration fall to the right of the peak of the averaged ground response spectrum (Figure 3.7.2-51). Therefore, the soil properties which result in structural periods closest to the region of peak amplification were used to determine the horizontal structural response.

The response of the structure in the vertical direction was also determined with consideration of the effect of pile and soil stiffness on the total response. The softest case was the consideration of the axial stiffness of the supporting piles without any contact between the base slab and soil.

The natural period of vibration for this case was 0.064 second. Since this natural period falls to the left of the peak of the averaged ground response spectrum (Figure 3.7.2-51) and is for the softest support stiffness, it is the period which results in the highest vertical structural responses.

The natural periods of the structural model are shown in Table 3.7.2-40. The structural responses in the two transverse horizontal directions were calculated. The envelope of the results for the two cases of no contact and full contact between the soil and the base slab was used in design.

The structure itself is rigid in the vertical direction but will respond as a one degree of freedom system coupled with the axial stiffness of the pile system assuming no contact between the base slab and in situ soil. From this analysis it was determined that the structure and piles should be designed for a vertical acceleration of 0.18 g for the 1/2 SSE.

Floor response spectra for the base slab (elevation 707.5) and the second story floor slab (elevation 734.5) were calculated. These spectra are envelopes of the two cases of no contact and full contact between the soil and base slab. The response spectra were broadened + 10 percent. Vertical floor response spectra were taken as two-thirds of the envelope of the horizontal north-south and east-west acceleration response spectra. A vertical specific analysis of the building-pile system was performed to demonstrate the adequacy of this assumption.

East Steam Valve Room

The east steam valve room is a trisided reinforced concrete structure that is supported on backfill and eight concrete caissons (Figure 3.7.2-52). Horizontal and rotational spring constants representing the soil and caisson interaction for three soil conditions are calculated and input as supporting elements for a lumped mass beam model of the structure. Vertical extensional springs were calculated considering the caissons acting independently of the soil. The valve room base slab is connected by a rigid diaphragm to a massive thrust block. The thrust block is modeled using beam elements while the diaphragm is treated as a rigid link. The idealized lumped mass and spring model of the valve room is shown in Figure 3.7.2-53. Element properties are shown in Tables 3.7.2-41 and 3.7.2-42 and mass point properties in Table 3.7.2-43. Table 3.7.2-44 lists the spring constants used to represent the soil-caisson system.

From the dynamic analysis, it was found that the structure responded horizontally to a combination of rigid body rocking and translation of the base and to structure-base interaction. Since a damping value of 10 percent is allowed for the first type motion while only 5 percent is allowed for the second, it was decided to use 5 percent for all modes for consistency and simplicity. Longitudinal motion of the structure was also considered in the analysis. Frequencies of the normal modes for the soil conditions considered are listed in Table 3.7.2-45.

Pile-Supported ERCW Piping Support Slab (in ERCW Access Dike)

The ERCW piping support slab is a segmented, reinforced concrete structure which passes through the ERCW access dike. The slab terminates at the first of the ERCW access roadway

cells. The slab is supported by steel H-piles driven through the access dike to refusal. The slab is provided to prevent the imposition of excess deformations from settlement of the access dike on the ERCW piping. Typical cross sections of the ERCW access dike showing the location of the piping support slab and pile supports are shown on Section C5-C5 of Figure 3.8.4-9. The orientation of the slab along the longitudinal axis of the access dike and the spacing of the pile supports is shown on Section A5-A5 of Figure 3.8.4-9.

The seismic analysis of this structure was accomplished in two parts; one part being an analysis of the steel piles supporting the slab, and the other part being an analysis of the slab itself. The method of analysis for each is described below.

The steel piles are relatively flexible when compared to the stiffness and mass of the ERCW access dike. Therefore, the piles were analyzed by assuming that the piles conformed to the deformed shape of the dike in the direction transverse to the centerline of the dike. Induced forces in the piles are a function of the curvature at any point in the pile caused by the imposed displacement profiles.

The piping support slab was assumed to conform to the deformed shape of the access dike along the longitudinal axis of the dike. That deformed shape imposes a sinusoidal displacement pattern on the slab. The maximum curvature induced in the slab is computed from the imposed displacement pattern. From that curvature, the forces in the slab may be computed. Since the piping support slab is segmented, the maximum curvature induced in any one portion of the slab is reduced. The degree of reduction of induced curvature increases as the segment length decreases. All of the slab segments are designed for the same maximum moment which could be induced in any segment.

The slab is analyzed vertically as a continuous slab supported at intervals by piles. No contact is assumed between the slab and the rockfill under it. The slab is designed to resist the computed vertical accelerations in addition to the dead load of rockfill above the slab, the ERCW piping, and the ERCW electrical conduit bank which it supports.

3.7.2.2.5 Non-Category I Structures

The Turbine and Service Buildings are analyzed for a total lateral base shear computed as the product of the mass of the structure and the ground acceleration for the SSE. The total lateral shear is distributed in the height of the structure according to the provisions of the uniform building code.

The LLRW Facility was analyzed for the design basis earthquake (DBE). The DBE was defined as a top-of-ground motion with three statistically independent orthogonal components. The ZPA acceleration was specified as 0.30g. The response spectrum was taken in accordance with Regulatory Guide 1.60, Rev. 1.

The seismic design of the Unit 1 and Unit 2 Old Steam Generator Storage Facilities (OSGSFs) is in accordance with Section 1607.4 of the 1999 Edition of the Standard Building Code. The minimum seismic coefficient for the Unit 1 and Unit 2 OSGSFs was determined to be 0.06g. See References 26 and 27.

The seismic design of the FLEX Equipment Storage Building (FESB) is in accordance with ASCE 7-10. See Reference 28.

3.7.2.3 Seismic Analysis Methods for Category I Structures

Category I structures for which these seismic analysis methods apply are listed in Table 3.7.1-1

3.7.2.3.1 Natural Frequencies and Seismic Excitation

The periods for the normal modes of vibration for the Category I structures are given in tables as referenced in subsection 3.7.2.2.

The interior concrete structure is used to illustrate the mode shapes, responses, and floor response spectra at critical plant equipment elevations. The first three mode shapes for the north-south direction and the first five mode shapes for the east-west direction are shown in Figures 3.7.2-54 through 3.7.2- 61. Torsion was considered in the east-west direction. The accelerations, displacements, shears, and moments for the two major directions from the SSE are shown in Figures 3.7.2-62 through 3.7.2-69. The angular accelerations, angular displacements, and torque in the east-west direction are shown in Figures 3.7.2-70 through 3.7.2-72. The floor response spectra for the SSE at elevation 692.0 and 732.63 with 1.0 percent damping are shown in Figures 3.7.2-73 through 3.7.2-76.

3.7.2.3.2 Procedures Used to Lump Masses

For the Category I structures, the mass points were located at floor slabs, changes in geometry, and at intermediate points to accurately model the structure. The equipment mass was considered in the lumped masses at the points of support. The stiffness of supported equipment was not considered in the lumped mass model of the structure. Table 3.7.2-11, the mass point properties of the interior concrete structure, lists both the total weight of the mass points and the appropriate equipment weights at the mass points.

The regular lumping techniques, which consist of lumping the continuous mass distribution at discrete joints referred to in Subsection 3.7.2.2 as mass point, were used in constructing some of the mathematical modes of systems and components supplied by Westinghouse. The location of the lumped masses are chosen at floor levels and points considered of critical interest, such as equipment. The lumped masses were computed from tributary structure dead loads and fixed equipment loads. Although a mechanical component may be analyzed using a mathematical model with as much complexity as allowed by the capacity of the computer and the computer code, the analysis is meaningful only when this detailed model also represents the effective utilization of the theory on which the computer code is built. Specifically, there were at least three things that were considered when establishing the mathematical model. They were:

1. The limiting values for items such as the degrees of freedom, sections, members, anchors, joints, bellows, etc;

2. The maximum allowable ratio of member rigidity;

3. The basic theory limitations. The computer code such as WESTDYN (Reference 14) and WECAN (Reference 25) can then be used to obtain the natural frequencies, mode shapes, absolute and relative displacements, absolute accelerations, and the stresses. The equipment design was determined adequate from the stress margin and by displacements limited to the operating tolerance.

3.7.2.3.3 Rocking and Translational Response Summary

A fixed-base assumption was made in the mathematical models for the rock-supported structures.

Soil-structure interaction was included for all soil supported structures. See Sections 3.7.1.6 and 3.7.2.2.3 for discussion of the analyses along with the mathematical models and damping values used.

3.7.2.3.4 Methods Used to Couple Soil with Seismic System Structures

The analyses of soil-supported structures was performed as explained in Sections 3.7.1.6 and 3.7.2.2.3. A finite element analysis was not performed to couple soil with structures.

3.7.2.3.5 Development of Floor Response Spectra

Response spectra for use in computing the response of structural appurtenances, or of equipment attached to Category I structures were produced by the time-history modal analysis technique. The four artificially produced accelerograms (Section 2.5.2.4) were the input motion at top of rock. To obtain a set of response spectra for one mass point for one direction of motion, the procedure outlined in Figure 3.7.2-77 was used.

Spectral values were computed for 55 periods using the distribution shown in Table 3.7.1-2. In all time-history calculations, a time interval of 0.010 second was used.

As a minimum, response spectra were computed for percentages of critical equipment damping of 0.5, 1.0, and 2.0. The response was calculated for the 1/2 SSE and the SSE except where the same percentage of critical structural damping was specified for both earthquakes. Where the 1/2 SSE and SSE structural damping are the same, response was calculated for the 1/2 SSE and/or the SSE (the SSE results equal twice the 1/2 SSE). See Table 3.7.1-3 for damping ratios used in piping analysis.

Horizontal response spectra were produced at the foundation level and at all major floors and at other points of interest within the structure for both east-west and north-south directions, except where symmetry justifies one direction.

As a minimum, vertical response spectra were produced at the foundation level and at the point of maximum structural amplification. The response spectra for rock was used throughout that portion of the structure where no structural amplification occurred. For other points, values were interpolated linearly between the response spectra for rock and for the point of maximum structural amplification.

3.7.2.3.6 Differential Seismic Movement of Interconnected Components

See Section 3.7.3.6.

3.7.2.3.7 Effects of Variations on Floor Response Spectra

For the soil-supported structures in which floor response spectra were produced, the soil properties were varied, and soil structure interaction was considered as discussed in Sections 3.7.1.6 and 3.7.2.2.3.

The peaks of the floor response spectra were widened by ±10 percent on the period or frequency scale to account for variations and uncertainties in the structural properties. As an option, response peak shifting as defined in ASME Code Case N-397 was used in some cases.

The majority of the Category I structures are supported on rock. As a result, the effects of soil-structure interaction are not a factor in widening the peaks of the floor spectra for these structures. For those structures which are not supported on rock, the foundation conditions were varied over a wide range, and floor spectra which envelope these conditions were developed before the widening criteria were applied.

In the analysis of the Category I structures, studies were made to ensure that enough mass points were used to sufficiently model the dynamic behavior of the structures. Also during the course of the analyses, numerous revisions were made in the structure which illustrate that reasonable variations in the structural material properties do not significantly change the period of vibrations of the structures.

Based on the above analyses, ±10 percent widening of the peaks of the floor spectra or peak shifting is sufficient to account for the variations and uncertainties in the structural properties.

3.7.2.3.8 Use of Constant Vertical Load Factors

A vertical lumped mass dynamic analysis was performed for all the Category I structures to determine the vertical loads. Constant vertical load factors were not used unless the dynamic analysis indicated the structure behaved as a rigid body in the vertical direction.

Constant vertical load factors were not used as the vertical floor response load for the seismic design of Category I systems and components within Westinghouse scope of responsibility.

Category I systems and components, when analyzed for vertical motion, used lump mass dynamic techniques. The results for each horizontal earthquake analysis were separately added on an absolute basis to those from the vertical earthquake analysis. The appropriate floor response spectra was used for the analysis. The dynamic mathematical model properly accounts for the amplification of the supports of the systems and components.

3.7.2.3.9 Method Used to Account for Torsional Effects

The dynamic analysis of structures is discussed in Section 3.7.2.1. The structures were analyzed for torsional effects using a lumped mass cantilever beam model which adequately represents all stiffness and inertial characteristics. This includes the inclusion of the torsional moment of inertia, eccentricity, and mass moment of inertia.

In the process of preparing lumped mass mathematical models for the structures, the location of both the center of rotation, and center of mass for each floor were computed.

The models described above were subjected to seismic excitations and the resultant responses in the form of frequencies, mode shapes, and stresses were obtained.

3.7.2.3.10 Comparison of Responses

Figure 3.7.2-78 shows a comparison of the accelerations obtained from the modal analysis time history and the response spectrum methods for the Auxiliary Control Building.

3.7.2.3.11 Methods for Seismic Analysis of Dams

Since no dams are utilized to impound bodies of water to serve as heat sinks, this section is not applicable to this power plant.

3.7.2.3.12 Methods to Determine Category I Structure Overturning Moments

From the dynamic analyses of the structures, the seismic moments, shears, and vertical loads were determined at the base of the structure.

The seismic moments, shears, and vertical loads were used in combination with other appropriate loads in determining total overturning effects as discussed in Section 3.8.

3.7.2.3.13 Analysis Procedure for Damping

None of the models used for Category I structures were coupled together, therefore, the damping values used were as shown in Section 3.7.1.3.

For systems and components with different elements coupled together in the same dynamic model, the lower percent damping was used in the analysis, or composite modal damping was computed using the individual component damping ratios as prescribed in Table 3.7.1-3.

IEEE 344-1975 provides the general basis for damping ratios used in analysis for seismic qualification of Category I equipment, including fluid system components such as pumps, valves, and tanks (refer to Table 3.7.1-3). The seismic qualification of safety-related equipment/components at SQN has been evaluated against IEEE 344-1975 and Regulatory Guide 1.100 (Reference 1). The NRC's Seismic Qualification Review Team (SQRT) conducted the evaluation during the licensing phase. The SQRT concluded that the SQN components/equipment, originally qualified in accordance with IEEE 344-1971, satisfies the requirements of IEEE 344-1975 and Regulatory Guide 1.100 (Reference 2). The results of the NRC SQRT audit provide justification for using damping ratios from IEEE 344-1975 in the analysis of Category I equipment for the design basis seismic events. However, after April 1993, the damping ratios used in analysis for equipment, components, and their supports will be as given in Table 3.7.1-3A (see Ref. 21).

Ensure the following two items are met when using Code Case N411:

1) Use the code case for piping systems analyzed by response spectrum methods and not those using time-history analysis methods;

2) When alternate damping criteria of this code are used, they will be used in their entirety in a given analysis and shall not be a mixture of Regulatory Guide 1.6.1 criteria and the alternated criteria of this code case.

3.7.3 Seismic Subsystem Analysis

3.7.3.1 Determination of Number of Earthquake Cycles

3.7.3.1.1 Category I Systems and Components Other Than NSSS

During the design life of the plant (40 years), two earthquakes of 1/2-SSE magnitude and one SSE are postulated to occur. This was based upon a study of seismic history in the Southern

Appalachian Province over a 100 year period. Based on this study, each occurrence is conservatively assumed to have a time duration of 15 seconds of strong excitation.

For Class A, Category I components, an evaluation of predominant frequencies revealed that the most significant response of components is conservatively considered using an average frequency of 20 Hz. Therefore, the number of cycles considered for the 1/2 SSE and the SSE are 600 cycles and 300 cycles, respectively.

Stresses in Class B, C, and D components are well within elastic limits and, as such, the equipment is capable of withstanding a very large number of seismic disturbances before a stress reduction factor (f) must be considered.

3.7.3.1.2 NSSS System

Where fatigue analyses of mechanical systems and components are required, Westinghouse specifies in the equipment specification the number of cycles of the 1/2 SSE to be considered. The number of cycles considered for the NSSS components are given in Table 5.2.1-1. The fatigue analyses are performed and presented as part of the components stress report.

3.7.3.2 Basis for Frequency Selection

The method used to analyze systems for dynamic loadings is the modal response spectrum method. Considerations used in preparing dynamic models for coupled and uncoupled systems are discussed in Section 3.7.3.6.

The system or component model is subjected to loadings in the form of accelerations that represent the seismic environment of its supports. Since the response spectrum employed is representative of the building elevation at the equipment location considered, structural amplifications are reflected in the spectra. Therefore, the input acceleration values taken from the building response spectra and utilized as input to the dynamic analysis of the subsystem assures the component model is loaded in a representative manner and the proper amplifications determined.

For other mechanical components, the building resonant frequency is usually avoided either by increasing or decreasing the stiffness and/or mass characteristics of the subsystem. Where this was found to be impractical or impossible, the subsystem component was analyzed and designed for the amplified appropriate loading.

3.7.3.3 Modal Response Combinations (TVA Analysis)

For piping, all modal responses, such as displacements, shear, moments, stresses, and/or accelerations, are combined using the method of the square root of the sum of the squares (SRSS) except that for modes with closely spaced frequencies the absolute sum of the modal responses is used. The method is also described in Section 3.7.3.6. For components and equipment procured prior to September 1974 and qualified by response spectrum analysis, modal responses were combined by the SRSS method without consideration of closely spaced modes.

Subsequent to September 1974, absolute summation of modes spaced within ten percent (based on period) was required.

3.7.3.4 Modal Response of Closely Spaced Frequencies (NSSS Analysis)

For analyses within the Westinghouse scope of responsibility, the total seismic response for each analysis was obtained by combining the individual modal responses utilizing the square root sum of the squares. For systems having modes with closely spaced frequencies, this method was modified to include the possible effect of these modes. The groups of closely spaced modes were chosen such that the difference between the frequencies of the first mode and the last mode in the group does not exceed 10 percent of the lower frequency. Combined total response or systems which have such closely spaced modal frequencies were obtained by adding to the square root of the sum of the squares of all modes the product of the responses of the modes in each group of closely spaced modes and a coupling factor ε. This can be represented mathematically as:

where:

$$R_T^2 = \sum_{i=1}^{N} R_i^2 + 2\sum_{j=1}^{S} \sum_{K=M_j}^{N_j-1} \sum_{l=K+1}^{N_j} R_K R_l \varepsilon_{kl}$$

R_T = total response

R_l = absolute value of response of mode i

N = total number of modes considered

S = number of groups of closely spaced modes

M_j = lowest modal number associated with group j of closely spaced modes

N_j = highest modal number associated with group j of closely spaced modes

ε_{kl} = coupling factor with

$$\varepsilon_{kl} = \left\{ 1 + \left[\frac{\omega'_K - \omega'_l}{\beta'_K \omega_K + \beta'_l \omega_l} \right]^2 \right\}^{-1}$$

and

$$\omega'_K = \omega_K \left[1 - \left(\beta'_K \right)^2 \right]^{1/2}$$

$$\beta'_K = \beta_K + \frac{2}{\omega_K \tau_d}$$

ω_K = frequency of closed spaced modes K(rad/sec)

β_K = fraction of critical damping in closely spaced mode K

τ_d = duration of the earthquake (sec.)

3.7.3.5 Equivalent Static Loads

A simplified seismic analysis, where floor response accelerations coincident with the first natural frequency are applied as static coefficients, is used only if it has been demonstrated that the component or equipment is rigid (≥ 25 Hz), or is adequately represented by a single degree of freedom model, and is shown to possess no more than one mode in each orthogonal axis in the flexible response range (< 25 Hz). If no assessment of the dynamic characteristics (resonant frequencies) of the component or equipment is made, the peak acceleration of the applicable floor spectrum is increased by a factor of 1.5. The equivalent static loads in this case are determined from the increased acceleration level.

3.7.3.6 Seismic Analysis of System Piping

The analysis of classified fluid system components other than the Reactor Coolant System will consider both static and dynamic loadings. The loading combinations considered and the allowable stress limits are provided in Table 3.9.2-5. Thermal expansion, dead load, and normal operational stresses due to system pressurization are analyzed per ANSI B31.1.0-1967 Code requirements, and the seismic analysis was performed as described herein. At locations of large change in flexibility within a given piping system, stresses due to all loadings are appropriately combined with the seismic stresses in accordance with Code requirements.

All piping systems important to safety that have been designed to remain functional in the event of a safe shutdown earthquake (SSE) are designated as Category I.

Those portions of structures, systems, or components which perform secondary safety functions and which are not essential to safe shutdown and isolation of the reactor but whose failure could jeopardize, to an unacceptable extent, the achievement of a primary safety function are considered Category I (L) safety related.

Where pressure boundary integrity is required, the piping is classified as Category I (L) A. For Category I (L) A, all piping and tubing shall be analyzed to meet the requirements for Category I except that ASME Section III subsection NC Equation 9 needs not to be evaluated for the upset condition.

Where pressure boundary integrity is not required during and after a seismic event, and where position retention is required, the piping is classified as Category I (L) B. The position retention method provides normal support for the self-weight and seismic support of the piping to ensure that the piping maintains position sufficient to prevent damage to adjacent piping or equipment performing a primary safety function.

3.7.3.6.1 Method of Analysis

Most piping systems 6 inches and greater in diameter and many of the more critical smaller lines are mathematically modeled and a complete rigorous dynamic analysis is performed. An approximate dynamic analysis is performed on the balance of the critical systems. The approximate method is described in Section 3.7.3.9. The analysis of buried piping is described in Section 3.7.3.12.

A rigorous dynamic seismic analysis is performed on applicable piping systems by the response spectrum method. Each pipe system is idealized as a mathematical model consisting of lumped masses connected by weightless elastic members. Lumped masses and elastic members adequately represent the dynamic and elastic characteristics of the pipe system. Using the elastic properties of the pipe, the flexibility matrix for the pipe is determined. The flexibility calculations include the effects of the torsional and bending deformations. The stiffness of curved members, valves, branch connections, etc., are taken into consideration.

Once the flexibility and mass matrices of the mathematical model are determined, the frequencies and mode shapes for all significant modes of vibration are determined. All significant modes having a period greater than 0.03 seconds are used in the analysis. The mode shapes and frequencies are solved in accordance with the following equation.

$$(K - w_n^2 M)\ \phi_n = 0$$

where: K = Square stiffness matrix of the piping system

M = Mass matrix for the piping system

w_n = Frequency for the nth mode

ϕ_n = Mode shape matrix of the nth mode

After the frequency is determined for each mode, the participation factors can be calculated by the following equation:

$$\Gamma_{njk} = \frac{\phi_n^T\ M\gamma_{jk}}{\phi_n^T\ M\phi_n}$$

where: Γ_{njk} = participation factor for mode n in the jth direction of support zone k.

γ_{jk} = displacement matrix of all modes due to a unit displacement of the jth direction restrained degrees of freedom in zone k.

Support Zone = A set of restrained nodes which move together during a dynamic event.

Using these results and the corresponding spectral accelerations of the mode for the direction and support zone being excited, the response for each mode is determined by the following equation:

$$(V_{in})_{jk} = \frac{\Gamma_{njk} \quad \phi_{in} \quad S_{anjk}}{w_n^2}$$

where: $(V_{in})_{jk}$ = displacement of mass i for mode n for an earthquake in the jth direction of zone k.

ϕ_{in} = value of mass i in ϕ_n

S_{anjk} = Spectral acceleration for mode n for an earthquake in the jth direction of zone k.

Using these results, the maximum displacement for each mode is calculated for each mass point in accordance with the following equation:

$$(V_{in})_j = \left[\sum_{k=1}^{nz} (V_{in})_{jk}^2 \right]^{1/2}$$

where: $(V_{in})_j$ = displacement of mass i for mode n for an earthquake in the jth direction.

nz = number of support zones used for the pipe loop.

The maximum displacements for each mode for the combined two dimensional earthquake are calculated as follows:

$$V_{in} = \sqrt{(V_{in})_x^2 + (V_{in})_y^2}$$

where: V_{in} = Maximum displacement of mass i for mode n

The total displacement for each mass is determined by taking the square root of the sum of the squares of the maximum deflection for each mode:

$$V_i = \sqrt{\sum V_{in}^2} \qquad *$$

where: V_i = Maximum displacement of mass i due to all modes calculated

*Except that for modes with closely spaced frequencies, the absolute sum of the modal responses shall be used.

The inertia forces for each direction of earthquake for each mode are then determined from:

$$Q_n = KV_n$$

where: Q_n = Inertia force matrix for mode n

V_n = Displacement matrix for mode n

K = Square stiffness matrix of the pipe loop

Each mode's contribution to the total displacement, internal forces, moments, and stresses is determined from standard structural analysis methods using the inertia forces for each mode as an external loading condition. The total combined results are obtained by taking the square root of the sum of the squares of each parameter under consideration, in a manner similar to that done for displacements.

Seismic Analysis of Piping Systems That Span Two or More Seismic Support Zones Such as Buildings, Portions of Buildings or Primary Components

Each building, portion of building, or primary component may be considered a separate support zone. The worst enveloped response spectrum to which any portion of the pipe in that zone is subjected, is used to represent the input motion in that zone.

For the evaluation of relative support motions in the seismic analysis of piping systems interconnecting two or more seismic support zones, the maximum relative movement between component supports is assumed and the piping system is subjected to movements through the piping system supports and restraints. Separate cases for building north-south earthquake and building east-west earthquake are considered. Support movements are based on the maximum of the floor movements immediately above and below the support location. The stresses in the piping resulting from these imposed restraint movements are considered as secondary stresses and are assumed to act concurrently with the thermal stresses.

3.7.3.7 Basis for Computing Combined Response

Category I piping systems are evaluated for excitation in each of two orthogonal horizontal directions and are individually combined with the excitation in the vertical direction. The stresses, moments, etc., at any point in the piping system are taken to be the largest value resulting from either of these combinations.

3.7.3.8 Amplified Seismic Response

Response spectra for Category I structures have been developed for the two orthogonal horizontal directions. For Category I equipment and piping that is installed in regions of the structure where vertical rigidity exists, vertical loads are conservatively assumed to be equal to two-thirds of the building horizontal ground response. In regions where the structure is flexible in the vertical direction, appropriate response spectra have been developed to represent the building response at the elevations in question.

For piping, the seismic analysis results (displacements, stresses, moments, etc.) are obtained from application of vertical response combined by the square root of the sum of the squares with each of the two orthogonal horizontal responses. For floor mounted equipment, vertical response is combined with each of the two orthogonal horizontal responses by absolute summation. In either case, the larger of the two combined responses is taken as the limiting case for design of the piping, components, or equipment.

3.7.3.9 Use of Alternate Dynamic Analysis

In order to determine the seismic capability of smaller piping systems (generally less than 6-inch diameter), a conservative approximate analysis is employed which includes the deadweight of the pipe as well as horizontal and vertical seismic loadings. Justification for the approximate method has been demonstrated by performing a dynamic analysis for representative systems to show that the approximate method is conservative.

Reference 20 provides NRC acceptance of TVA's Alternate Analysis methodology.

3.7.3.10 Modal Period Variation

The response spectra used in the mathematical models for Category I piping and components have been modified to take into consideration variations that may affect where peaks occur. The design spectrum envelope was widened by at least 10 percent by period or response peak shifting (as defined in ASME Code Case N-397) was used in order to account for uncertainties in the structural model and input. For all rigid and flexible equipment, the maximum acceleration was obtained from the spectrum response curves developed for the applicable elevation.

3.7.3.11 Torsional Effects of Eccentric Masses

Eccentric masses are modeled in the piping mathematical model as cantilevered weightless rods with a length equal to the distance from the center of gravity of the mass to the pipe flow axis.

3.7.3.12 Buried Seismic Category I Piping Systems

Category I buried piping which penetrates structures where fill settlement or seismic movements are expected to be high is protected from differential movement of the soil and structure by a guard box and flexible joints or by an oversized pipe sleeve with or without flexible joints. The guard box is supported by and moves with the soil. One open end of the box butts against, but is not connected to, the building. Large pipes which may be overstressed by the differential movement of the structure and the soil-bearing end of the guard box are provided with two flexible couplings. One coupling is located near the structure and the other near the soil-bearing end of the guard box. The guard box provides adequate clearance to permit one joint to move with the structure and one with the soil without contacting the pipe.

An oversized pipe sleeve is also supported and moves with the soil. One open end of the pipe sleeve butts against, but is not connected to, the building or a flexible joint at the face of the building. The purpose, as with the guard box, is to allow the process pipe to accommodate the relative building-soil movements without overstressing at the building to soil interface.

For seismic-classed, buried piping that penetrates structures in areas where very little fill is involved and seismic movements are low, protection from differential movement of the soil and structure is provided by an oversized opening in the structure. The annular space between the pipe and opening is filled with a resilient material. The first support inside the structure is located to allow for relative movement of the pipe and structure. The soil-structure interface is treated as an anchor, and stresses are limited to Code allowables.

Where practical, seismic-classed buried piping is routed to avoid areas of weak soils. Where weak soils are encountered, the bad material is removed and replaced by backfill. The backfill was placed to standards that ensure suitable bearing conditions, therefore, the transition from one material to another, i.e., insitu soil to backfill should not be a problem. In lieu of the above, in some cases an analysis was performed to show that the pipe has sufficient strength to bridge the discontinuity and support the soil above the pipe without exceeding the allowable stress of the piping material.

Buried piping complies with the loading conditions and stress limits given in Section 3.9.2.5.2 and is analyzed seismically as follows.

The soil is considered to be a horizontal 1-layer system which responds to the earthquake by moving in a continuous sinusoidal plane wave and supported by a second layer or base material. The top layer is assumed to pick up accelerations from the base material.

Utilizing the average values for the shear wave velocity and density for the top layers, the ground deformation pattern in terms of wave length and amplitude is determined. The buried pipes are assumed to deform along with the surrounding soil layers. No relative displacement between the soil and the buried piping is considered.

3.7.3.13 Interaction of Other Piping with Category I Piping

The seismic-induced effects of non-Category I piping systems on Category I piping is accounted for by including in the analysis of the Category I piping a length of the non-Category I system

equal to at least the first seismic restraint or anchor beyond the point of change in classification. Normally, a valve serves as a seismic-nonseismic boundary in a fluid system. The valve capability to maintain a pressure boundary in the event of a seismic event is assured by seismically designing piping on the nonclassified side through the first seismic restraint or anchor beyond the valve.

3.7.3.14 Field Location of Supports and Restraints

Criteria have been developed for field use in locating supports for Category I, TVA Class B, C, and D process and instrument piping. The applicability of the criteria according to line size, schedule, temperature, pressure, and location is described in Section 3.9.2.6.

The criteria was based upon a detailed analytical study that evaluated the important parameters which included dead and live weights, seismic, and thermal considerations for a range of operating temperatures and a given maximum operating pressure. In order to maintain stresses in the piping components to well within the ANSI B31.1.0-1967 Power Piping Code limits, support requirements were determined for a range of line sizes and materials that are used in the plant. Data was generated for each pipe size according to the alternate dynamic analysis method, Subsection 3.7.3.9.

3.7.3.15 Seismic Analysis for Fuel Elements, Control Rod Assemblies, and Control Rod Drives

Fuel assembly component stresses induced by horizontal seismic disturbances are analyzed through the use of finite element computer modeling. The time-history floor response based on a standard seismic time history normalized to SSE levels is used as the seismic input. The reactor internals and the fuel assemblies are modeled as spring and lumped mass systems. The seismic response of the fuel assemblies is analyzed to determine design adequacy. A detailed discussion of the analyses performed for typical fuel assemblies is contained in References 16 and 22.

The Control Rod Drive Mechanisms (CRDM) are seismically analyzed to confirm that system stresses under seismic conditions do not exceed allowable levels as defined by the ASME Boiler and Pressure Vessel Code, Section III for "Upset" and "Faulted" conditions. Based on these stress criteria, the allowable seismic stresses in terms of bending moments in the structure are determined. The CRDM is mathematically modeled as a system of lumped and distributed masses. The model is analyzed under appropriate seismic excitation and the resultant seismic bending moments along the length of the CRDM are calculated. These values are then compared to the allowable seismic bending moments along the length of the CRDM. These values are then compared to the allowable seismic bending moments for the equipment, to assure adequacy of the design.

3.7.3.16 Seismic Qualification of Main Control Room Suspended Ceiling and Air Flow Delivery Components

Flexible ducting, triangular ducting, and air bar linear diffusers deliver air flow from the sheet metal ducts located above the Main Control Room (MCR) suspended ceiling to the air space below the ceiling. These air flow delivery components have been seismically qualified to ensure position retention and structural integrity such that pressure boundary and air flow delivery are maintained during and after the Safe Shutdown Earthquake (SSE).

Seismic qualification of the suspended ceiling and the air flow delivery components has been accomplished by rigorous time history analysis using the ANSYS computer code. The analysis models non-linear response due to gaps, friction, ceiling support wires, and geometric effects of the ceiling grid work. The seismic time histories correspond to the control building response to the SSE at the floor

elevation above the suspended ceiling. The time histories were adjusted to account for ±10 percent frequency uncertainty. A factor of safety of at least 1.3 for seismic qualification of the ceiling and air flow delivery components was demonstrated by increasing the time history motions by 30 percent and verifying that the seismic demand is less than the capacity of the ceiling grid members (including air bars), support wires, and flexible and triangular ducts. The ceiling grid member and support wire capacities are based on classical structural analysis formulas. The flexible and triangular duct capacities were based on analysis for potential failure modes, industry precedents, and the analytical determination that the ceiling grid work remains stable. Other suspended ceiling components, including luminous panels, were shown to retain their position during and after the SSE.

3.7.4 Seismic Instrumentation Program

Seismic instrumentation is provided in order to assess the effects on the plant of earthquakes. The Seismic Monitoring System is not safety-related; nor does it have any effect on safety-related systems or equipment. The components of the seismic monitoring system were selected to emphasize accuracy and reliability, while at the same time minimizing the maintenance and surveillance resources required to support the system. The instrumentation program is described in the following sections.

3.7.4.1 Comparison with NRC Regulatory Guide 1.12

The instrumentation is described in Section 3.7.4.2 below and meets the intent of NRC Regulatory Guide 1.12, Revision 1 (April 1974), although the array of instruments differs. The instrumentation described below is consistent with the guidance in Sections C.1.b and C.1.c of RG 1.12 R1 with regard to the number and locations of triaxial response spectrum recorders. However, the function of the response spectrum recorders is now provided by event analysis software capabilities described in Section 3.7.4.2.5b below. Accelerometers and accelerographs at the locations noted below will record accelerograms for which event analysis software will provide a timely display of spectral content. The accuracy and reliability of the instrumentation below exceed that of the Response Spectrum Recorders discussed in RG 1.12 R1.

The instrumentation described below is not consistent with the guidance in Section C.1.a of RG 1.12 R1 with regard to the installation of triaxial peak accelerographs. These peak accelerographs (usually "scratch gages") have been shown to have questionable accuracy, are difficult to maintain, and have minimal value in post-earthquake evaluations. Therefore, this function is deleted from the upgraded seismic monitoring system.

In summary, the instrumentation described below meets the intent of RG 1.12 R1.

3.7.4.2 Location and Description of Instrumentation

The instrumentation consists of the following:

NOTE: The full scale range of the seismic monitoring instrumentation as shown in the following text represents absolute values.

1. A strong motion triaxial accelerometer in the Unit 1 Reactor Building on the base slab at elevation 680.0 in the annulus between the Shield Building wall and the containment vessel. The full scale range of the transducer is from 0g to 1.0g with a bandwidth of 0 Hz to 50 Hz and a temperature effect of less than 2 percent per 100°F change. The accelerometer is connected to a digital recorder, as described in item 5.

2. A strong motion triaxial accelerometer installed inside the crane wall in the Unit 1 Reactor Building on the floor slab at elevation 734.0. This accelerometer and the accelerometer discussed in item 1 have identical response characteristics and are oriented with their recording axes aligned. This accelerometer is also connected to a second digital recorder, as described in item 5.

3. A strong motion triaxial accelerograph, with a full-scale range of 0-2g, inside the Diesel Generator Building on the base slab at elevation 722.0. The internal recorder is capable of digitally recording a minimum of 25 minutes of data with a minimum of 3 seconds of pre-event memory and 5 seconds of post-event memory. An internal seismic trigger with a bandwidth of 0.1Hz - 12.5 Hz actuates the recording system when a threshold acceleration level is sensed. The unit is equipped with an internal rechargeable battery and an external plug-in type battery charger.

4. A strong motion triaxial accelerograph inside the Auxiliary Building on the floor slab at elevation 734.0. This unit is identical in capability to that described in item 3.

5. A seismic instrumentation panelboard located at elevation 685.0 in the Unit 1 Control Building in the Auxiliary Instrument Room between columns C4 and C5. The panelboard houses a centralized seismic monitoring system consisting of a Recorder Panel, a Central Controller, a Display Panel, an Alarm Panel, and a Printer Panel. A description of each item mounted on the panelboard is given below.

a) A Recorder Panel containing two digital recorders capable of a minimum of 18-bit resolution. The two strong motion accelerometers of items 1 and 2 above provide input to the recorders. Each recorder is capable of digitally recording a minimum of 25 minutes of data with a minimum of 3 seconds of pre-event memory and 5 seconds of post-event memory. Each recorder has an internal trigger with a bandwidth of 0.1 to 12.5 Hz which constantly monitors its interconnected triaxial accelerometer. When one of the recorders senses a seismic event, an interconnect network causes the other recorder to trigger and record data at the same time to ensure time-synchronized event-data files. The triggers threshold is 0.01g. A signal is also sent to the Alarm Panel to indicate that the system is recording (see item 5c). The recorders can operate for a minimum of 24 hours on internal batteries.

b) A Central Controller consisting of an industrial computer and custom software, which provides a user interface in a multi-tasking operating system that supports simultaneous acquisition and interrogation. The controller is powered by 120V AC power. The Central Controller retrieves data files from the digital recorders after an event and performs automatic analysis of the data. The event-analysis capabilities include computation of the Cumulative Absolute Velocity (CAV), spectral content of the recorded data, and comparison to the site 1/2 SSE design basis response spectrum. The Central Controller's software capabilities also include automatic event alarm and annunciation (see item 5c). The event analysis functions of the Central Controller may be performed off-line, if necessary.

c) An Alarm Panel containing visual alarms to locally indicate that a seismic event has been recorded, the 1/2 SSE site design response spectrum has been exceeded in a damaging frequency range, and to indicate either loss of AC or DC power. The seismic event alarm is triggered by the Recorder Panel; while the 1/2 SSE exceedance alarm is triggered by the Central Controller. Activation of either the event alarm or exceedance alarm also causes corresponding windows on an annunciator panel in the Main Control Room to illuminate.

d) A Display Panel to provide a visual display for operation of the centralized system.

e) A Printer panel to provide a permanent copy of operational data and event analysis results.

6. Annunciator lights mounted on a window box located in the Main Control Room, Unit 1, Control Building. The messages displayed on the annunciator windows in the Main Control Room indicate seismic event occurrence and 1/2 SSE Response Spectra Exceedance.

The basis for the selection of the Reactor Building for installation of seismic instrumentation is that it is the rock-supported building most important to safety. The basis for the selection of the Diesel Generator Building is that it is the soil-supported building most important to safety. The basis for the selection of the Auxiliary Building is that it is a rock-supported structure outside containment.

3.7.4.3 Control Room Operator Notification

The operator receives two annunciation signals in the Main Control Room. The first annunciation is provided by the Recorder Panel described in item 5a, Section 3.7.4.2, which informs the operator that a seismic event is being recorded. This annunciation indicates that one or both of the triggers for the two digital recorders sensed seismic motion in excess of 0.01g.

The second annunciation signal is received later and is provided by the Central Controller described in item 5b, Section 3.7.4.2, and is only received if the event-analysis software indicates that the site 1/2 SSE site design basis response spectrum has been exceeded in a potentially damaging frequency range, as described in Section 3.7.4.4.

The basis for establishing the 1/2-SSE design basis response spectrum for the levels at which control room operator notification is required is that the design of structures, systems, and components (SSC) for loading combinations, which include 1/2 SSE, are to design basis allowable stress levels which are well within the elastic limit of the materials.

3.7.4.4 Controlled Shutdown Logic

The operator will utilize input from multiple sources to determine the need for a controlled shutdown following the seismic event. The decision for a controlled shutdown will be based primarily on an assessment of the actual damage potential of the event, which will be available within 4 hours, and on the results of short-term inspections, which will be available within 8 hours. The operator may also confirm that ground motion was sensed by plant personnel and/or confirm the occurrence of the seismic event with the National Earthquake Information Center. The purpose of these actions 1) to perform a preliminary assessment of the effect of the earthquake on the physical condition of SSC, and 2) to determine if shutdown of the plant is warranted based on observed damage to SSC, or because the 1/2 SSE has been exceeded.

The walkdowns of plant SSC in accessible areas of the plant will be performed within 8 hours following the seismic event. The walkdowns will be performed using the general guidance in Chapter 4 of EPRI Report NP-6695 (ref. 3.7.4.5-2). These walkdowns will include a check of the neutron flux monitoring sensors for changes and an inspection of the containment isolation system to ensure continued containment integrity. The walkdown data will be compared to data previously obtained from baseline and Maintenance Rule inspections in order to obtain a clear understanding of any seismic induced damage.

The assessment of the damage potential of the event will be made within 4 hours following the event using the OBE (i.e., 1/2 SSE) Exceedance Criteria developed by the Electric Power Research Institute (EPRI) and documented in references 3.7.4.5-1 thru 5. As noted above, the indication of damage potential will be provided by event-analysis software installed on the centralized seismic monitoring system described in Section 3.7.4.2. The analysis will be performed for the uncorrected accelerograms recorded from the strong motion triaxial accelerometer located in the annulus of the Unit 1 Reactor Building on the base slab (item 1 of Section 3.7.4.2). Use of the uncorrected accelerograms is known to be conservative. The basis for use of the seismic motion on the Reactor Building base slab is that the site 1/2 SSE design response spectrum is defined at top-of-rock, which corresponds to the Reactor Building base slab location.

The EPRI OBE Exceedance Criteria uses two indicators of damage potential. The first indicator of damage potential is specified as the CAV, or cumulative absolute velocity, of the accelerogram. A meaningful usage of the CAV requires that the recorded data be obtained by an accelerometer mounted in the free-field. As noted above, the 1/2 SSE design spectrum for Sequoyah is defined as occurring at top-of-rock (i.e., foundation level of the rock-supported structures); whereas, free-field is defined as top-of-soil at sufficient distance from nearby structures to preclude interference/interaction effects. The Seismic Monitoring System for Sequoyah does not have a free-field accelerometer. Therefore, the shutdown logic adopted for Sequoyah will concede CAV exceedance and base the assessment of damage potential solely on the second indicator, as discussed below.

In the absence of data from a free-field accelerometer, the second indicator is an evaluation of the frequency range in which the OBE spectrum is exceeded. This criteria is based on research which indicates that exceedances above a frequency of 10 Hz are not damaging to nuclear plant structures, systems, and components (SSC). The following two measures of damage potential are used.

- The 1/2 SSE site design basis response spectrum is exceeded if the 5 percent damping response spectra generated for any one of the three components of the uncorrected accelerograms from the Reactor Building foundation accelerometer is larger than:

    1. The corresponding 1/2 SSE design basis response spectral acceleration in a frequency range between 2-10 Hz, or
    2. The corresponding 1/2 SSE design basis response spectral velocity for frequencies between 1-2 Hz.

Therefore, Sequoyah will base the assessment of damage potential of the event on either a spectral acceleration exceedance between 2-10 Hz or a spectral velocity exceedance between 1-2 Hz.

Once the results of the walkdown and the assessment of damage potential of the event are available, the operators will determine 1) if a controlled shutdown is required and 2) the condition of the equipment needed to safely achieve shutdown. If the assessment of damage potential indicates that the 1/2 SSE Exceedance Criteria were not met, and the walkdown results are favorable, the plant will continue to operate. Basing shutdown logic on the actual damage potential of the event and on the results of short-term inspections reduces shutdown risk by avoidance of unnecessary shutdowns while ensuring that the operator has the information on plant status necessary to make an informed shutdown decision.

Post-shutdown actions, including retrieval of data, recalibration of seismic instruments, and comparison of measured and predicted responses will be based on the guidance in Chapters 5 and 6 of EPRI Report NP-6695 (Ref. 3.7.4.5-2).

3.7.4.5 References

1. EPRI Report NP-5930, "A Criterion for Determining Exceedance of the Operating Basis Earthquake," July 1988.
2. EPRI Report NP-6695, "Guidelines for Nuclear Plant Response to an Earthquake," December 1989.
3. EPRI Report TR-100082, "Standardization of the Cumulative Absolute Velocity," December 1991.
4. EPRI Report TR-104239, "Seismic Instrumentation in Nuclear Power Plants for Response to OBE Exceedance: Guideline for Implementation," June 1994.
5. NRC Memorandum from Stuart A. Treby, OGC, to Goutam Bagchi, NRR, concerning "Interpretation of Part 100, Appendix A Regarding: Proposed Guidelines for Determining when Operating Basis Earthquake is Exceeded," dated May 3, 1988.

3.7.5 Seismic Design Control Measures

3.7.5.1 Westinghouse Control Measures

Seismic Category I mechanical equipment supplied by Westinghouse has been qualified in accordance with the applicable seismic qualification requirements contained in Sections 3.7.2 and 3.7.3. Westinghouse provided a Certificate of Compliance, by letter dated February 16, 1988, from T. A. Lordi to J. B. Hosmer, certifying that all equipment supplied by Westinghouse is in conformance with the FSAR. An in-house Westinghouse document, cited in that letter, provides a basis for that certification. TVA has reviewed that document for methodology and applicability, and concluded that the analyses results presented in it comply with the FSAR requirements.

Documentation provided to TVA also demonstrates that Westinghouse was implementing a vendor audit program during the time equipment was procured and supplied to TVA for Sequoyah. By letters dated April 20, 1988 and June 1, 1988, from T. A. Lordi to J. B. Hosmer, Westinghouse provided a list of Quality Releases for some equipment and a QA checklist used by Westinghouse QA auditors circa 1970 to audit its vendors. Westinghouse stated that a sampling review of its quality records indicate that its vendors were audited; (1) to assure they had an acceptable QA program (to ensure requirements of the purchase specification would be met) (2) to ensure that their QA program was being properly implemented, and (3) that data submittals required by the purchase order specifications were reviewed as a precondition for issuance of equipment quality releases. Since the procurement specifications prescribed the load capacities at the specific locations necessary for the equipment to have the capacity to withstand plant specific seismic loads, Westinghouse concludes, and TVA concurs, that the above listed QA activities provided assurance that the equipment met the seismic design requirements.

Seismic Category I instrumentation and electrical equipment supplied by Westinghouse has been qualified as described and documented in a series of WCAPs referenced in Section 3.10. These documents provide the bases for establishing seismic qualification of Westinghouse supplied instrumentation and electrical equipment for Sequoyah.

3.7.5.2 TVA Control Measures

The procedure described below has been implemented by TVA to ensure that equipment purchased by TVA has satisfied seismic design requirements.

Seismic qualification requirements were included in TVA procurement contracts. For Sequoyah components and equipment, TVA provided vendors with direction and design information for performing seismic qualification which was consistent with IEEE Standard 344-1971 and Sections 3.7.2, 3.7.3, and 3.10. In TVA's specifications to the vendors, each vendor was required to submit design calculations which were independently reviewed and certified to ensure compliance with all contract requirements. If adequate independent review was not furnished by the vendor, TVA performed the independent review. TVA inspectors reviewed contractor fabrication processes and witnessed tests. TVA also hired component qualification engineers experienced in stress analysis, dynamic analysis, and testing to review vendor seismic qualification of equipment and to provide direction and design input to the specifications. Vendor seismic qualification documents were reviewed by established interface review (squadcheck) procedures. The procurement branch routed documentation to the appropriate engineering organization for review. The review comments were attached to the squadcheck and routed back to the responsible procurement branch.

Seismic design, review, and control procedures were formalized by issuance of Engineering Procedure (EP) 3.02 in 1977. This procedure was replaced in 1985 with discipline interface document CEB-DI-121.03, "Seismic Design, Review, and Control." Programmatically, the evaluation of vendor-generated seismic analyses and/or testing of components was conducted by the component qualification engineers of TVA's Civil Engineering Branch to ensure compliance with applicable design criteria and the FSAR. This review met the intent of an ASME Owner's review by present standards. In addition, the depth of review included a technical assessment to satisfy the TVA reviewer of the component's design adequacy. The TVA review process also included a review by the section supervisor before final approval of the vendor submittal. An arithmetic check was not typically performed unless the magnitude of numbers presented appeared to be unreasonable. Minor corrections were made directly on the vendor document submitted for review, and the document was approved with such corrections as noted. Major discrepancies resulted in the document being returned to the vendor for correction. The document was then resubmitted to TVA for further review.

NEDP-9 “Seismic/Structural Qualification” is the current TVA engineering procedure for seismic design, review, and control. Use of that procedure, or subsequent procedure, will ensure that equipment purchased by TVA will satisfy seismic requirements.

3.7.6 References

1. "Dynamic Effect of Earthquake on Engineering Structures," Tennessee Valley Authority, Report No. 8-194, August 1939.

2. Newmark, N. M., "Design Criteria for Nuclear Reactors Subjected to Earthquake Hazards," paper presented at meeting of the International Atomic Energy Association, Tokyo, Japan, June 12-16, 1967.

3. Richart, F. E., Jr., J. R. Hall, Jr., R. D. Woods, Vibrations of Soils and Foundations, Prentice-Hall, Inc., 1970, New Jersey.

4. Parmelee, R. A., D. S. Perelman, et al., "Seismic Response of Structure-Foundation Systems," Proceedings of the American Society of Civil Engineers, December 1968 (EM6).

5. Whitman, R. V., "Analysis of Foundation Vibrations," Vibration in Civil Engineering , 1966, Buttersworth, London.

6. Marley Company, "Earthquake and Wind Load Analysis Calculations," TVA Contract No. 71C53-92700.

7. Letter from Engineering Data Systems to TVA, March 6, 1972; Sequoyah Nuclear Plant Cooling Towers, Checking of Seismic Calculations.

8. Hayashi, Satoshi, "Analysis and Design of Earth Structures and Foundations," Syllabus for Earthquake Engineering Fundamentals, August 22 through September 2, 1966, Engineering Extension, Department of Engineering, University of California, Los Angeles.

9. Donald C. Cook Nuclear Plant Final Safety Analysis Report, American Electric Power Service Corporation, Docket Nos. 50-315 and 50-316.

10. Thomas, T. H., et al., Nuclear Reactors and Earthquakes, TID-7024, U.S. Atomic Energy Commission, Washington DC, August 1963.

11. Soroka, W. W., Analog Methods in Computation and Simulation, McGraw-Hill, New York, 1965.

12. Biggs, J. M., et al., Structural Design for Dynamic Loads, Chapter 8, McGraw-Hill, New York, 1959.

13. Harrington, R. L., and W. S. Vorus, "Dynamic Shock Analysis of Shipboard Equipment," Marine Technology, October 1967. Published by the Society of Naval Architects and Marine Engineers.

14. WESTDYN, Westinghouse Structural Dynamic Analysis Computer Program, August 1970. (Westinghouse Nuclear Energy Systems Proprietary.)

15. Bohm, G., "Seismic Analysis of Reactor Internals for Pressurized Water Reactors," First National Congress of Pressure Vessel and Piping Technology ASME Panel on Seismic Analysis & Design of Pressure Vessels and Piping Components, San Francisco, May 10-12, 1971.

16. Gesinski, L. T., "Fuel Assembly Safety Analysis for Combined Seismic and Loss-of-Coolant Accident," WCAP-7950, October 20, 1972.

17. Broms, Bengt B., "Design of Laterally Loaded Piles," Journal of the Soil Mechanics and Foundation Division, ASCE, No. SM3, May 1965, pp 79-99.

18. Bechtel Power Corporation, Repair BC-TOP-4A, "Seismic Analysis of Structures and Components for Nuclear Power Plants" Revision 3, September 1974.

19. Hadjian, A. H., and Ellison, B., "Equivalent Properties for Layered Media," Soil Dynamics and Earthquake Engineering, Vol. 4, No. 4, pp 203-209.

20. Letter from NRC to TVA dated May 13, 1992, "Alternate Analysis Review Program Phase II - Pipe Support Deflection Criteria, Sequoyah Nuclear Plant, Units 1 and 2 (TAC Nos. R00419 and R00420)," (A02 920519 008).

21. Letter from TVA to NRC dated January 28, 1993, "Sequoyah Nuclear Plant (SQN) - NRC Inspection Report Nos. 50-327/90-18 and 50-328/90-18 - Unresolved Issue (URI) 88-12-08 - Component Damping Values," (S64 930126 800)

22. BAW-10220P, “Mark-BW Fuel Assembly Application for Sequoyah Nuclear Units 1 and 2” March 1996.

23. BAW-10227P-A, “Evaluation of Advanced Cladding and Structural Material (M5) in PWR Reactor Fuel,” February 2000.

24. BAW-2396, “Sequoyah Nuclear Plant M5 Design Report,” May 2001.

25. Westinghouse Electric Company, Computer Code, WECAN (Westinghouse Electric Analysis), A Large General Purpose Finite Element Method Computer Program.

26. SCG-1S-614, “Design of Old Steam Generator Storage Facility.”

27. SCG-1S-813, “Design of Unit 2 Old Steam Generator Storage Facility (OSGSF).”

28. CDQ0003602014000172, “Qualification of FLEX Equipment Storage Building (FESB).”

TABLE 3.7.1-1

CATEGORY I STRUCTURES OF THE ORIGINAL PLANT DESIGN

1. Shield Building
2. Interior Concrete Structure - Reactor Building
3. Steel Containment Vessel
4. Auxiliary Control Building
5. Additional Equipment Buildings
6. Intake Pumping Station
7. Intake Pumping Station - Retaining Walls
8. ERCW Pumping Station
9. Cells Providing Access to ERCW Pumping Station
10. Diesel-Generator Building
11. East Steam Valve Room
12. Refueling Water Tanks
13. Refueling Water Pipe Tunnels
14. Waste Packaging Building
15. CDWE Building
16. ERCW Pipe Support Structure

TABLE 3.7.1-2

PERIODS FOR SPECTRAL VALUES

Range of Periods, T	Increment, ΔT
0.03 to 0.10 second	0.005 second
0.11 to 0.30 second	0.010 second
0.32 to 0.50 second	0.020 second
0.55 to 1.00 second	0.050 second

TABLE 3.7.1-3

DAMPING RATIOS USED IN ANALYSIS OF CATEGORY I STRUCTURES, SYSTEMS, COMPONENTS, AND SOIL FOR STRUCTURES LISTED IN TABLE 3.7.1-1
(Sheet 1)

Item	Damping Ratio, Percent of Critical Viscous Damping		
	1/2 Safe Shutdown Earthquake	Safe Shutdown Earthquake *	Safe Shutdown Earthquake **
Steel Containment Vessel	1	1	1(1)
Concrete Shield Building and Internal Concrete Structure	2	5	7
Other Welded Steel Structure	1	1	2
Bolted Steel Structures	2	2	5
Other Reinforced Concrete Structures	5	5	7
Bolted or Nailed Wooden Structures	5	5	5
Damping for Determining Amplification through Soils for Soil Supported Structures (See also Section 3.7.2.2.3)	10	10	10
Vital Piping System	0.5	0.5	1
Equipment/Components (3)(5)	2(2)	3(5)	(3)(5)
TVA-Design Steel Supports for Equipment/Components (5)	2(2)	3(5)	5(4)(5)
Companion-Flange Ductwork	4	5	5
Pocket-Lock Ductwork	7	7	7
Welded Ductwork	1	2	2

* If stress values are not at or near yield.

** If stress values are at or near yield.

NOTES:

(1) Damping values used when stress levels are at or near yield. All other damping values are for lower stress levels.

(2) In the dynamic analysis for seismic qualification of active pumps and valves, as defined in Regulatory Guide 1.48, this value is also used for SSE.

TABLE 3.7.1-3

DAMPING RATIOS USED IN ANALYSIS OF CATEGORY I STRUCTURES, SYSTEMS, COMPONENTS, AND SOIL FOR STRUCTURES LISTED IN TABLE 3.7.1-1
(Sheet 2)

(3) Includes assemblies supplied by vendors. Does not include TVA-designed supports. Composite modal damping may be used for vendor-supplied equipment/component assemblies and their TVA-designed steel supports, or the equipment/component values may be used for both.

(4) To use 5% support damping, the support connections to both the equipment/component assemblies and the building structure must be bolted or an equivalent amount of bolted connections must be present in the support. Otherwise, 3% support damping is used.

(5) After April 1993, the damping ratios used in analysis for equipment, components, and their supports shall be given in Table 3.7.1-3-A. (Reference 21)

TABLE 3.7.1-3A
DAMPING RATIOS USED IN ANALYSIS OF CATEGORY 1
EQUIPMENT, COMPONENTS, AND THEIR SUPPORTS
FOR STRUCTURES LISTED IN TABLE 3.7.1-1
(Sheet 1)

		Damping Ratio, (% of critical, viscous damping)		
			Safe Shutdown Earthquake	
Description of Equipment, Component, or Support	Notes on Usage	Operating Basis Earthquake	If stress values are not at or near yield	If stress values are at or near yield
Active pumps and valves.	Used in dynamic analysis for seismic qualification of active pumps and valves Refer to footnotes 1 and 2.	2	2	2
Welded construction mechanical components (tanks, vessels, heat exchangers, strainers, and filter) of concern for the SQN seismic margin program.	Used only for mechanical components which satisfy all of the following four requirements; 1. welded construction 2. required for safe shutdown 3. floor or wall mounted 4. located in rock supported buildings This requirement is implemented in accordance with Reference 14.39. Refer to footnotes 1 and 2.	2	2	2
All other equipment/ components.	Used for cases excluding those above. Includes assemblies supplied by vendors. Refer to footnotes 1 and 2.	2	3	3
TVA designed steel supports for equipment/ components.	Refer to footnotes 2 and 3.	2	3	3 (See Footnote 3)

TABLE 3.7.1-3A
DAMPING RATIOS USED IN ANALYSIS OF CATEGORY 1
EQUIPMENT, COMPONENTS, AND THEIR SUPPORTS
FOR STRUCTURES LISTED IN TABLE 3.7.1-1
(Sheet 2)

Footnotes:
1. Does not include TVA designed steel supports.

2. Composite modal damping may be used for vendor supplied equipment/component assemblies and their TVA designed steel supports, or, conservatively, the equipment/component damping values may be used for both.

3. 5% support damping may be used for the SSE when the stress level is at or near yield and the support connections to both the equipment and the building structure are bolted.

TABLE 3.7.1-4

SOIL SUPPORTED CATEGORY I STRUCTURES

Structure	Depth of Soil Over Bedrock
Diesel-Generator Building	45-75 feet
Refueling Water Storage Tanks	30-35 feet
Underground Electrical Concrete Conduit Banks	Varies
ERCW Electrical Conduit Bank (in ERCW Access Dike)	Varies
Class IE Electrical Systems Manholes and Handholes	Varies
Auxiliary Building - ERCW Pipe Tunnel	30-35 feet

TABLE 3.7.1-5

PILE AND CAISSON SUPPORT CATEGORY I STRUCTURES

Structure	Depth of Soil Over Bedrock
Waste Packaging Area	30 feet ±
Condensate Demineralizer Waste Evaporator Building	30 feet ±
East Steam Valve Room	20-25 feet ±
ERCW Pipe Support Slab	45-70 feet ±

TABLE 3.7.2-1

SUMMARY OF VARIED PARAMETER RANGES USED IN THE SEISMIC ANALYSIS OF THE ICE CONDENSER BASKET SUPPORT FRAME

Item	Description	Sequoyah Parameters
1	Lower Support Structure Stiffness	
	a. Radial Direction	430,000 lb/in
	b. Tangential Direction	670,000 lb/in
2	Lattice Frame Wall Panels Combined Stiffness	
	a. Radial Direction	50,000 lb/in
	b. Tangential Direction	23,900 lb/in
3	Local Impact Stiffness	
	a. Radial Direction	4.8 to 9.2 Kip/in
	b. Tangential Direction	4.8 to 11.8 Kip/in
4	Ice Basket Weight with Ice	37 lb/ft
5	Gap Size	0.05 inch
6	Ice Basket Stiffness	
	a. Bending Rigidity (EI)	330×10^6 lb/in^2
	b. Shear Rigidity (GA_s)	

where: E = modulus of elasticity

I = moment of inertia

G = shear modulus

A_s = shear area

TABLE 3.7.2-2 (Sheet 1)

SEQUOYAH NUCLEAR PLANT
CATEGORY I STRUCTURES AFFECTED BY CONCRETE MODULUS CHANGE
FOR STRUCTURES LISTED IN TABLE 3.7.1-1

Structure	Reanalysis Yes	Reanalysis No	Reason
Reactor Buildings - Units 1 & 2			
Shield Buildings		X	Modulus changed from 3.8 x 10^6 lb/in^2 to 4.1 x 10^6 lb/in^2. The effects of this change are negligible.
Interior Concrete Structures	X		Modulus changed from 3.2 x 10^6 lb/in^2 to 4.8 x 10^6 lb/in^2.
Auxiliary-Control Building	X		Modulus changed from 3.2 x 10^6 lb/in^2 to 4.8 x 10^6 lb/in^2.
Intake Pumping Station		X	Structure is rigid; therefore, the modulus change has no effect.
Intake Pumping Station Retaining Walls		X	Same as intake pumping station.
Diesel-Generator Building		X	Motion is due to soil-structure interaction and the building modes are rigid.
Waste Packaging Area		X	Same as diesel-generator building.
Steam Valve Room		X	Same as diesel-generator building.
Refueling Water Tanks and Pipe Tunnels		X	Motion of soil is predominate effect on structures.
Portable Diesel Pump* and Pipe Tunnels		X	Same as intake pumping station.

* Portable diesel pump is not required after operation of ERCW intake pumping station.

TABLE 3.7.2-2 (Sheet 2)

Structure	Reanalysis Yes	Reanalysis No	Reason
Liquid CO_2 Storage Vault		X	Same as intake pumping station.
Additional Equipment Buildings	X		Modulus changed from 3.2×10^6 lb/in^2 to 4.1×10^6 lb/in^2 plus numerous structural layout changes were made.

TABLE 3.7.2-6

SHIELD BUILDING ELEMENT AND MASS POINT PROPERTIES

$E_c = 5.45 \times 10^5$ K/Ft^2; $G_c = 2.18 \times 10^5$ K/Ft^2

Element No.	Length, Ft	Area, Ft^2	North-South Moment of Inertia, Ft^4	East-West Moment of Inertia, Ft^4	Mass Pt No.	Weight, Kips	WMOI K-Ft^2
1	6.61	1206	2472×10^3	2472×10^3	1	797.8	3.404×10^6
2	2.21	1206	2472×10^3	2472×10^3	2	561.7	2.397×10^6
3	4.00	1206	2472×10^3	2472×10^3	3	717.9	3.063×10^6
4	4.00	1187	2431×10^3	2434×10^3	4	712.2	3.039×10^6
5	4.00	1187	2431×10^3	2434×10^3	5	717.9	3.063×10^6
6	4.00	1206	2472×10^3	2472×10^3	6	984.1	4.199×10^6
7	6.88	1206	2472×10^3	2472×10^3	7	1606.4	6.854×10^6
8	10.88	1206	2472×10^3	2472×10^3	8	1311.5	5.596×10^6
9	3.62	1206	2472×10^3	2472×10^3	9	654.8	2.794×10^6
10	3.62	1206	2472×10^3	2472×10^3	10	655.8	2.798×10^6
11	3.63	1206	2472×10^3	2472×10^3	11	614.3	2.621×10^6
12	3.33	1145	2232×10^3	2459×10^3	12	571.9	2.440×10^6
13	3.33	1145	2232×10^3	2459×10^3	13	572.8	2.444×10^6
14	3.34	1145	2232×10^3	2459×10^3	14	576.5	2.460×10^6
15	3.33	1160	2279×10^3	2472×10^3	15	579.4	2.472×10^6
16	3.33	1160	2279×10^3	2472×10^3	16	580.3	2.476×10^6
17	3.34	1160	2279×10^3	2472×10^3	17	669.6	2.857×10^6
18	4.19	1206	2472×10^3	2472×10^3	18	757.9	3.234×10^6
19	4.19	1206	2472×10^3	2472×10^3	19	757.9	3.234×10^6
20	4.19	1206	2472×10^3	2472×10^3	20	1515.9	6.468×10^6
21	12.57	1206	2472×10^3	2472×10^3	21	2273.9	9.703×10^6
22	12.57	1206	2472×10^3	2472×10^3	22	2273.9	9.703×10^6
23	12.58	1206	2472×10^3	2472×10^3	23	2273.9	9.703×10^6
24	12.58	1206	2472×10^3	2472×10^3	24	2273.9	9.703×10^6
25	12.58	1206	2472×10^3	2472×10^3	25	6795.0	28.995×10^6

TABLE 3.7.2-7

SHIELD BUILDING PERIODS
PERIODS OF NATURAL MODES OF VIBRATION

	Horizontal Motion		Vertical Motion	
Mode No.	Period, Second	Participation Factor	Period, Second	Participation Factor
1	0.227	.024	0.067	1.234
2	0.185	1.259		
3	0.075	0.005		
4	0.044	0.556		

TABLE 3.7.2-10

INTERIOR CONCRETE STRUCTURE ELEMENT PROPERTIES

E_c = 691,200 K/Ft^2; G_c = 276,500 K/Ft^2

				North-South Motion		East-West Motion	
Element No.	Length, Ft	Area, Ft^2	Torsion Constant, Ft^4	Moment of Inertia, Ft^4	Shear Factor	Moment of Inertia, Ft^4	Shear Factor
1	12.22	1868	1840 x 10^3	1330 x 10^3	1.76	900 x 10^3	1.79
2	10.00	2034	1700 x 10^3	1850 x 10^3	1.70	1190 x 10^3	2.27
3	9.96	1723	1610 x 10^3	1830 x 10^3	1.49	1180 x 10^3	2.22
4	9.96	1723	1610 x 10^3	1830 x 10^3	1.49	1180 x 10^3	2.22
5	5.36	880	249 x 10^3	991 x 10^3	1.07	320 x 10^3	1.75
6	5.35	880	249 x 10^3	991 x 10^3	1.07	320 x 10^3	1.75
7	6.73	1154	151 x 10^3	707 x 10^3	2.02	1047 x 10^3	1.98
8	6.73	1154	151 x 10^3	707 x 10^3	2.02	1047 x 10^3	1.98
9	6.73	1154	151 x 10^3	707 x 10^3	2.02	1047 x 10^3	1.98
10	6.73	1154	151 x 10^3	707 x 10^3	2.02	1047 x 10^3	1.98
11	6.73	1154	151 x 10^3	707 x 10^3	2.02	1047 x 10^3	1.98
12	6.72	1154	151 x 10^3	707 x 10^3	2.02	1047 x 10^3	1.98
13	11.82	816	1510 x 10^3	755 x 10^3	2.00	755 x 10^3	2.00
14	11.81	816	1510 x 10^3	755 x 10^3	2.00	755 x 10^3	2.00

TABLE 3.7.2-11

INTERIOR CONCRETE STRUCTURE MASS POINT PROPERTIES

Mass Point No.	Total Weight, Kips	Equipment Weight, Kips	WR^2 K-Ft^2	N-S Motion Eccentricity, Ft	E-W Motion Eccentricity, Ft
1	8099	3133	7.48×10^6	0.0	3.75
2	4436	1623	4.89×10^6	0.0	7.2
3	3399	825	4.07×10^6	0.0	11.0
4	3655	896	4.74×10^6	0.0	-3.4
5	1140	433	1.41×10^6	0.0	-12.6
6	5372	3283	5.92×10^6	0.0	21.6
7	1849	684	2.56×10^6	0.0	43.7
8	1849	684	2.56×10^6	0.0	43.7
9	1849	684	2.56×10^6	0.0	43.7
8	1849	684	2.56×10^6	0.0	43.7
11	1848	684	2.56×10^6	0.0	43.7
12	2933	1060	4.16×10^6	0.0	17.7
13	1461	15	2.67×10^6	0.0	0.0
14	771	48	1.34×10^6	0.0	0.0

TABLE 3.7.2-12

INTERIOR CONCRETE STRUCTURE PERIODS
FOR NATURAL MODES OF VIBRATION

	North-South Motion		East-West Motion		Vertical Motion	
Mode No.	Period, Second	Participation Factor	Period, Second	Participation Factor	Period, Second	Participation Factor
1	0.106	1.690	0.203	0.906	0.043	1.406
2	0.040	-0.993	0.102	1.434		
			0.067	0.089		
			0.044	-0.396		
			0.039	-0.700		

TABLE 3.7.2-13

STEEL CONTAINMENT VESSEL ELEMENT PROPERTIES

$E = 4{,}176{,}000\ K/Ft^2$; $G = 1{,}670{,}400\ K/Ft^2$

				East-West Motion		North-South Motion	
Element No.	Length, Ft	Area, Ft^2	Torsion Constant, Ft^4	Moment of Inertia, Ft^4	Shear Factor	Moment of Inertia, Ft^4	Shear Factor
1	3.19	44.40	1468×10^2	734×10^2	2.00	734×10^2	2.00
2	3.20	44.40	1468×10^2	734×10^2	2.00	734×10^2	2.00
3	5.71	43.75	1447×10^2	734×10^2	2.00	723×10^2	2.00
4	4.00	39.81	1347×10^2	674×10^2	2.00	674×10^2	2.00
5	5.62	38.70	1311×10^2	656×10^2	2.00	656×10^2	2.00
6	4.08	39.64	1311×10^2	656×10^2	2.00	656×10^2	2.00
7	4.86	37.45	1239×10^2	619×10^2	2.00	619×10^2	2.00
8	4.85	37.45	1239×10^2	619×10^2	2.00	619×10^2	2.00
9	6.21	36.43	1202×10^2	601×10^2	2.00	601×10^2	2.00
10	3.50	39.43	1302×10^2	651×10^2	2.00	651×10^2	2.00
11	5.50	29.36	970×10^2	535×10^2	2.00	435×10^2	2.00
12	4.00	27.96	970×10^2	535×10^2	2.00	435×10^2	2.00
13	6.00	24.66	918×10^2	514×10^2	2.00	405×10^2	2.00
14	3.50	25.31	918×10^2	514×10^2	2.00	405×10^2	2.00
15	6.50	25.09	867×10^2	492×10^2	2.00	375×10^2	2.00
16	9.00	24.02	794×10^2	423×10^2	2.00	371×10^2	2.00
17	6.33	24.02	794×10^2	423×10^2	2.00	371×10^2	2.00
18	6.33	24.02	794×10^2	423×10^2	2.00	371×10^2	2.00
19	6.34	24.02	794×10^2	423×10^2	2.00	371×10^2	2.00
20	3.50	24.02	794×10^2	423×10^2	2.00	371×10^2	2.00
21	6.00	18.06	597×10^2	299×10^2	2.00	299×10^2	2.00
22	3.50	18.06	597×10^2	299×10^2	2.00	299×10^2	2.00
23	4.52	16.17	535×10^2	267×10^2	2.00	267×10^2	2.00
24	10.38	15.93	512×10^2	256×10^2	2.00	256×10^2	2.00
25	8.50	15.38	461×10^2	231×10^2	2.00	231×10^2	2.00
26	10.25	13.08	321×10^2	161×10^2	2.00	161×10^2	2.00
27	6.05	11.64	226×10^2	113×10^2	2.00	113×10^2	2.00
28	9.80	9.35	117×10^2	59×10^2	2.00	59×10^2	2.00
29	7.50	5.37	18×10^2	9×10^2	2.00	9×10^2	2.00

TABLE 3.7.2-14

STEEL CONTAINMENT VESSEL MASS POINT PROPERTIES

Mass Point No.	Total Weight, Kips	Weight Moment of Inertia K-Ft^2	Eccentricity, Ft North South Motion	Eccentricity, Ft East West Motion
1	69.51	2.30×10^5	0.000	0.000
2	103.11	3.41×10^5	0.000	0.000
3	122.92	4.09×10^5	1.866	-3.510
4	149.68	5.02×10^5	3.063	-5.766
5	167.96	5.60×10^5	1.364	-2.569
6	125.28	4.14×10^5	0.000	0.000
7	104.66	3.46×10^5	0.000	0.000
8	140.99	4.66×10^5	0.000	0.000
9	160.48	5.30×10^5	-0.035	-0.324
10	132.02	4.36×10^5	0.078	0.759
11	118.63	3.97×10^5	0.703	8.770
12	166.93	5.72×10^5	0.666	14.909
13	179.67	6.16×10^5	0.850	11.455
14	147.60	5.01×10^5	2.173	9.381
15	190.89	6.37×10^5	1.168	5.712
16	199.49	6.59×10^5	0.657	0.542
17	151.76	5.02×10^5	0.715	0.414
18	131.23	4.34×10^5	0.825	0.480
19	104.76	3.46×10^5	0.821	0.617
20	83.20	2.75×10^5	0.320	-0.208
21	85.76	2.84×10^5	-0.095	-0.931
22	84.54	2.80×10^5	-0.085	-0.799
23	109.81	3.59×10^5	-0.038	-0.344
24	121.74	3.89×10^5	0.000	0.000
25	91.53	2.65×10^5	0.000	0.000
26	60.98	1.50×10^5	0.000	0.000
27	61.61	1.34×10^5	0.000	0.000
28	53.00	1.00×10^4	0.000	0.000
29	21.20	0.41×10^4	0.000	0.000

TABLE 3.7.2-15

STEEL CONTAINMENT VESSEL PERIODS
FOR NATURAL MODES OF VIBRATIONS

North-South Motion

Mode No.	Frequency (Hz)	Participation Factor
1	9.346	1.717
2	16.129	-0.0001
3	23.810	-1.098

East-West Motion

Mode No.	Frequency (Hz)	Participation Factor
1	9.259	1.731
2	16.129	0.004
3	23.810	-1.108

Vertical Motion

Mode No.	Frequency (Hz)	Participation Factor
1	24.634	1.489

TABLE 3.7.2-16

AUXILIARY-CONTROL BUILDING ELEMENT PROPERTIES

E_c = 590,000 K/Ft^2; G_c = 236,000 K/Ft^2

				North-South Motion		East-West Motion	
Element No.	Length, Ft	Area, Ft^2	Torsion Constant, Ft^4	Moment of Inertia, Ft^4	Shear Factor	Moment of Inertia, Ft^4	Shear Factor
1	7.62	13992	3020 x 10^4	5367 x 10^4	3.995	6944 x 10^4	3.797
2	7.63	13992	3020 x 10^4	5367 x 10^4	3.995	6944 x 10^4	3.797
3	4.25	13992	3020 x 10^4	5367 x 10^4	3.995	6944 x 10^4	3.797
4	8.38	11160	2940 x 10^4	5992 x 10^4	2.536	7518 x 10^4	3.323
5	8.37	11160	2940 x 10^4	5992 x 10^4	2.536	7518 x 10^4	3.323
6	8.25	11160	2940 x 10^4	5992 x 10^4	2.536	7518 x 10^4	3.323
7	9.25	8132	2510 x 10^4	4711 x 10^4	2.011	7476 x 10^4	2.475
8	9.75	8132	2510 x 10^4	4711 x 10^4	2.011	7476 x 10^4	2.475
9	16.00	7226	2920 x 10^4	4492 x 10^4	2.107	6182 x 10^4	2.882
10	10.00	5048	1810 x 10^4	2529 x 10^4	2.673	3507 x 10^4	2.203
11	4.00	5048	1810 x 10^4	2529 x 10^4	2.673	3507 x 10^4	2.203
12	15.00	1795	554 x 10^4	789 x 10^4	1.777	1053 x 10^4	2.287
13	13.75	657	209 x 10^4	80 x 10^4	3.422	443 x 10^4	1.413

TABLE 3.7.2-17

AUXILIARY-CONTROL BUILDING MASS POINT PROPERTIES

Mass Point No.	Total Weight, Kips	Equipment Weight, Kips	WR^2 K-Ft^2	N-S Motion Eccentricity, Ft	E-W Motion Eccentricity, Ft
1	16003	0	1.46×10^8	-73.8	0.0
2	15727	10	1.80×10^8	-47.1	0.0
3	27450	1600	2.42×10^8	-19.4	0.0
4	14849	0	1.70×10^8	-9.1	0.0
5	18118	0	2.46×10^8	-0.6	0.0
6	17640	260	2.00×10^8	-4.6	0.0
7	12408	0	1.75×10^8	-16.8	0.0
8	27550	300	3.57×10^8	-27.0	0.0
9	21241	200	2.85×10^8	11.4	0.0
10	7138	25	0.75×10^8	-34.0	0.0
11	7864	286	0.89×10^8	19.8	0.0
12	4463	0	0.40×10^8	-4.9	0.0
13	4110	400	0.24×10^8	-23.7	0.0

TABLE 3.7.2-18

AUXILIARY-CONTROL BUILDING PERIODS
FOR NATURAL MODES OF VIBRATION

	North-South Motion		East-West Motion		Vertical Motion	
Mode No.	Period, Second	Participation Factor	Period, Second	Participation Factor	Period, Second	Participation Factor
1	0.128	0.143	0.107	1.583	0.037	1.768
2	0.101	1.695	0.044	-1.226		
3	0.052	-0.934	0.032	0.903		
4	0.044	-0.400				
5	0.038	-0.276				

TABLE 3.7.2-19

ELEMENT PROPERTIES
ADDITIONAL EQUIPMENT BUILDING UNIT 1

E_c = 590,400 K/Ft^2; G_c = 236,000 K/Ft^2

				North-South Motion		East-West Motion	
Element No.	Length, Ft	Area, Ft^2	Torsion Constant, Ft^4	Moment of Inertia, Ft^4	Shear Factor	Moment of Inertia, Ft^4	Shear Factor
1	16.50	375	9.19×10^4	74230	2.04	70480	1.97
2	16.50	375	9.19×10^4	74230	2.04	70480	1.97
3	11.50	235	8.91×10^4	62660	2.02	57670	1.98
4	11.50	235	8.91×10^4	62660	2.02	57670	1.98
5	11.50	235	8.91×10^4	62660	2.02	57670	1.98
6	11.75	241	8.91×10^4	62680	1.97	57670	2.03

TABLE 3.7.2-20

ELEMENT PROPERTIES
ADDITIONAL EQUIPMENT BUILDING UNIT 2

E_c = 590,400 K/Ft^2; G_c = 236,000 K/Ft^2

				North-South Motion		East-West Motion	
Element No.	Length, Ft	Area, Ft^2	Torsion Constant, Ft^4	Moment of Inertia, Ft^4	Shear Factor	Moment of Inertia, Ft^4	Shear Factor
1	7.00	415	5.218×10^4	44710	1.85	171414	2.18
2	16.00	511	5.230×10^4	88590	1.78	205024	2.28
3	11.50	295	1.652×10^5	86970	2.54	150950	1.65
4	11.50	295	1.652×10^5	86970	2.54	150950	1.65
5	11.50	295	1.652×10^5	86970	2.54	150950	1.65
6	11.75	314	1.652×10^5	86980	2.32	154230	1.76
7	11.25	314	1.652×10^5	86980	2.32	154230	1.76
8	14.50	314	1.652×10^5	86980	2.32	154230	1.76

TABLE 3.7.2-21

MASS POINT PROPERTIES
ADDITIONAL EQUIPMENT BUILDING UNIT 1

Mass Point No.	Total Weight, Kips	Equipment Weight, Kips	N-S Motion Eccentricity, Feet	E-W Motion Eccentricity, Feet
Base	2.41×10^3	0		
1	3.33×10^3	0	0.56	-0.05
2	2.78×10^3	260	1.96	0.01
3	4.27×10^2	0	0.03	0
4	4.27×10^2	0	0.03	0
5	7.10×10^2	11	0.60	-0.49
6	5.03×10^2	0	0.04	0.30

TABLE 3.7.2-22

MASS POINT PROPERTIES
ADDITIONAL EQUIPMENT BUILDING UNIT 2

Mass Point No.	Total Weight, Kips	Equipment Weight, Kips	N-S Motion Eccentricity, Feet	E-W Motion Eccentricity, Feet
Base	1.08×10^3	0		
1	2.44×10^3	0	-7.29	9.91
2	3.26×10^3	261	-5.17	5.03
3	5.61×10^2	20	0.31	-0.36
4	5.75×10^2	34	0.48	-0.94
5	9.40×10^2	97	-0.23	-0.31
6	9.31×10^2	68	-0.46	-0.42
7	9.68×10^2	40	-0.44	-0.52
8	7.10×10^2	0	0.51	0.67

TABLE 3.7.2-23

NORMAL MODES OF VIBRATION
ADDITIONAL EQUIPMENT BUILDING UNIT 1

	North-South Motion		East-West Motion		Vertical Motion	
Mode No.	Period, Second	Participation Factor	Period, Second	Participation Factor	Period, Second	Participation Factor
1	0.1214	-1.467	0.1232	-1.451	0.0432	1.481
2	0.0469	-0.967	0.0468	-1.002	0.0200	-0.602
3	0.0243	0.229	0.0240	0.231	0.0118	0.202

TABLE 3.7.2-24

ADDITIONAL EQUIPMENT BUILDING UNIT 2

	North-South Motion		East-West Motion		Vertical Motion	
Mode No.	Period, Second	Participation Factor	Period, Second	Participation Factor	Period, Second	Participation Factor
1	0.2302	0.7639	0.1201	1.512	0.0415	1.408
2	0.0480	-1.732	0.1103	0.0271	0.0171	0.693
3	0.0318	0.6093	0.0443	0.7176	0.0103	0.247

TABLE 3.7.2-25

PUMPING STATION ELEMENT PROPERTIES

E_c = 455,000 K/Ft^2; G_c = 182,000 K/Ft^2; Density = 0.15 K/Ft^3

			North-South Motion		East-West Motion	
Element No.	Length, Ft	Area, Ft^2	Moment of Inertia, Ft^4	Shear Factor	Moment of Inertia, Ft^4	Shear Factor
1	12.00	3168	1632082	1.752	5695264	2.330
2	9.50	2445	1458520	1.334	4595595	3.995
3	11.00	2627	1539202	1.433	4856264	3.310
4	9.50	2780	1643044	1.517	5076009	2.935
5	10.00	2541	1534342	1.767	5284052	2.303
6	5.00	2541	1534342	1.767	5284052	2.303

TABLE 3.7.2-26

PUMPING STATION MASS POINT PROPERTIES

Mass Point No.	Total Weight, Kips	Equipment Weight, Kips	North-South Motion Soil Restraint Stiffness Kip/Feet	East-West Motion Soil Restraint Stiffness Kip/Feet
1	4590	0.0	416×10^6	242×10^6
2	4622	717.0	403×10^6	234×10^6
3	4153	8.4	221×10^6	128×10^6
4	4436	545.9	9.6×10^6	5.6×10^6
5	2865	0.0	7.4×10^6	4.3×10^6
6	4290	3335.2	2.5×10^6	1.4×10^6

TABLE 3.7.2-27

PUMPING STATION PERIODS
FOR NATURAL MODES OF VIBRATION

Type of Motion	Period	Participation Factor
North-south	0.0599	1.071
East-west	0.0752	1.061
Vertical	0.0264	1.063
North-south with restraint	0.0223	1.038
East-west with restraint	0.0268	1.040

TABLE 3.7.2-28

ERCW PUMPING STATION
ELEMENT PROPERTIES FOR MATHEMATICAL MODEL

E_c = 590,000 K/Ft^2; G_c = 236,000 K/Ft^2

			X-Direction		Y-Direction	
Element No.	Length, Ft	Area, Ft^2	Moment of Inertia, Ft^4	Shear Factor	Moment of Inertia, Ft^4	Shear Factor
1	12.0	4963	2686000	1.50	1499000	1.50
2	10.0	4963	2686000	1.50	1499000	1.50
3	10.0	4963	2686000	1.50	1499000	1.50
4	10.0	4963	2686000	1.50	1499000	1.50
5	10.0	4963	2686000	1.50	1499000	1.50
6	10.0	4963	2686000	1.50	1499000	1.50
7	6.5	4963	2686000	1.50	1499000	1.50
8	8.5	1636	1057000	1.88	601600	2.04
9	8.0	1636	1057000	1.88	601600	2.04
10	8.0	1636	1057000	1.88	601600	2.04
11	8.0	1636	1057000	1.88	601600	2.04

TABLE 3.7.2-29

ERCW PUMPING STATION
MASS POINT PROPERTIES FOR MATHEMATICAL MODEL

Mass Point No.	Water and Equipment Weight (Kips)	Total Weight (Kips)
1	318	8507
2	289	7734
3	289	7734
4	289	7734
5	289	7734
6	239	6380
7	1615	5077
8	90	2115
9	1417	3380
10	0	1963
11	4617	5599

TABLE 3.7.2-30

ERCW PUMPING STATION
NORMAL MODES OF VIBRATION

	Motion in X-Direction		Motion in Y-Direction		Vertical Motion	
Mode No.	Period, Second	Participation Factor	Period, Second	Participation Factor	Period, Second	Participation Factor
1	0.0916	1.618	0.108	1.624	0.033	1.955
2	0.0354	-0.816	0.038	-0.839		

TABLE 3.7.2-31

DIESEL-GENERATOR BUILDING ELEMENT PROPERTIES

E_c = 455,000 K/Ft^2; G_c = 182,000 K/Ft^2

			North-South Motion		East-West Motion	
Element No.	Length, Ft	Area, Ft^2	Moment of Inertia, Ft^4	Shear Factor	Moment of Inertia, Ft^4	Shear Factor
1	6.00	1060	2345 x 10^3	2.30	1187 x 10^3	1.77
2	6.00	1060	2345 x 10^3	2.30	1187 x 10^3	1.77
3	5.75	1162	2521 x 10^3	2.09	1367 x 10^3	1.91
4	3.75	1259	2253 x 10^3	3.00	1166 x 10^3	2.10
5	5.00	992	1902 x 10^3	6.52	637 x 10^3	1.65
6	2.75	1259	2253 x 10^3	3.00	1166 x 10^3	2.10

TABLE 3.7.2-32

DIESEL-GENERATOR BUILDING MASS POINT PROPERTIES

Mass Point No.	Total Weight, Kips	N-S Motion Weight, Moment of Inertia, K/Ft^2	E-W Motion Weight, Moment of Inertia, K/Ft^2
Base	17,300	2730×10^4	1780×10^4
1	960	212×10^4	107×10^4
2	980	215×10^4	113×10^4
3	3,250	472×10^4	223×10^4
4	920	135×10^4	57×10^4
5	800	118×10^4	48×10^4
6	2,250	223×10^4	100×10^4

TABLE 3.7.2-33

DIESEL-GENERATOR BUILDING PERIODS
FOR NORMAL MODES OF VIBRATION

Mode No.	North-South Motion Period, Second	East-West Motion Period, Second	Vertical Motion Period, Second
1	0.211	0.207	0.173
2	0.115	0.109	---
3	0.040	0.033	---

TABLE 3.7.2-34

WASTE PACKAGING AREA ELEMENT PROPERTIES

E_c = 455,000 K/Ft^2; G_c = 182,000 K/Ft^2

Element No.	Length, Ft	Area, Ft^2	North-South Motion Moment of Inertia, Ft^4	North-South Motion Shear Factor	East-West Motion Moment of Inertia, Ft^4	East-West Motion Shear Factor
1	10.00	573	557 x 10^3	1.62	185 x 10^3	2.35
2	6.50	573	557 x 10^3	1.62	185 x 10^3	2.35
3	6.50	573	557 x 10^3	1.62	185 x 10^3	2.35
4	5.75	573	556 x 10^3	1.62	185 x 10^3	2.35
5	5.75	325	395 x 10^3	2.62	80 x 10^3	1.56
6	5.50	257	285 x 10^3	2.06	73 x 10^3	1.82
7	6.00	156	174 x 10^3	1.52	55 x 10^3	2.60

TABLE 3.7.2-35

WASTE PACKAGING AREA MASS POINT PROPERTIES

Mass Point No.	Total Weight, Kips	N-S Motion Weight, Moment of Inertia, K-Ft^2	E-W Motion Weight, Moment of Inertia, K-Ft^2
Base	2378	165×10^4	48×10^5
1	1210	56×10^4	19×10^4
2	718	54×10^4	18×10^4
3	512	51×10^4	17×10^4
4	419	41×10^4	11×10^4
5	597	29×10^4	7×10^4
6	535	17×10^4	6×10^4
7	443	6×10^4	3×10^4

TABLE 3.7.2-36

WASTE PACKAGING AREA
STIFFNESS OF SOIL SPRINGS

SOIL IN CONTACT WITH BASE SLAB

Mode No.	North-South Motion	East-West Motion	Vertical Motion
Kx	790000	735000	9.27×10^5
Kr	1.2×10^9	3.37×10^8	---

SOIL NOT IN CONTACT WITH BASE SLAB

Mode No.	North-South Motion	East-West Motion	Vertical Motion
Kx	60,000	104,000	1.05×10^6
Kr	7.63×10^8	2.78×10^8	---

The spring rates are given in units of kips/feet and kip-feet/rad for the linear and rotational springs, respectively.

TABLE 3.7.2-37

CONDENSATE DEMINERALIZER WASTE EVAPORATOR BUILDING
STIFFNESS FOR SOIL SPRINGS

Soil Not in Contact With Base Slab

	North-South*	East-West	Vertical
Kx	77090	87600	2.044×10^6
Kr	7.236×10^7	8.93×10^7	---

Soil in Contact With Base Slab

	North-South	East-West	Vertical
Kx	672500	713500	2.86×10^6
Kr	3.05×10^8	4.68×10^8	---

*Direction of earthquake.

The spring rates are given in units of kips/feet and kip-feet/rad for the translational and rotational springs, respectively.

TABLE 3.7.2-38

CONDENSATE DEMINERALIZER WASTE EVAPORATOR BUILDING
ELEMENT PROPERTIES

Member	Length, Ft^2	Area, Ft^4	Moment of Inertia, N-S Ft^4	Moment of Inertia, E-W Ft^4	Shear Shape Factor, N-S	Shear Shape Factor, E-W
1-2	14	370	110830	159800	2.22	1.69
3-4	13.5	370	110830	159800	2.22	1.69

TABLE 3.7.2-39

CONDENSATE DEMINERALIZER WASTE EVAPORATOR BUILDING
MASS POINT PROPERTIES

Mass Point No.	Weight, Kips	Weight, Moment of Inertia, N-S (K/Ft^2)	Weight, Moment of Inertia, E-W (K/Ft^2)
1	2144.4	305040	495040
2	993.9	216130	311610
3	1599.5	307490	465060
4	899.5	224440	323590
5	1121.6	203970	319430

TABLE 3.7.2-40

CONDENSATE DEMINERALIZER WASTE EVAPORATOR BUILDING
NATURAL PERIODS OF THE STRUCTURAL MODEL

Direction	Period, Second
North-South	0.445
East-West	0.410
Vertical	0.064

Soil in Contact with Base Slab

Direction	Period, Second
North-South	0.201
East-West	0.173
Vertical	0.054

TABLE 3.7.2-41

EAST STEAM VALVE ROOM
ELEMENT PROPERTIES

E_c = 596,000 K/Ft^2; G_c = 248,333 K/Ft^2

Element No.	Area (Ft^2) Total	Shear North-South	Shear East-West	Moment of Inertia (Ft^4) North-South	Moment of Inertia (Ft^4) East-West	Torsion Constant (Ft^4)
1	308.2	57.7	81.2	142200	20110	1473
2	309.1	67.8	121.1	140400	20300	1498
3	330.4	75.1	180.9	146600	21190	1786
4	519.9	260.2	191.4	172500	25860	5759
5	519.9	260.2	191.4	172500	25860	5759
6	327.4	72.5	174.5	145100	20990	1742
7	157.8	69.2	52.7	74710	10930	173.9
8	1.0E05	1.0E05	1.0E05	1.0E06	1.0E06	1.0E05
9	750.0	622.5	622.5	39060	56250	77810
10	750.0	622.5	622.5	39060	56250	77810
11	750.0	622.5	622.5	39060	56250	77810
12	750.0	622.5	622.5	39060	56250	77810

TABLE 3.7.2-42

EAST STEAM VALVE ROOM
ELEMENT PROPERTIES

Element	Shear Center		Mass Center		Eccentricity	
No.	Z (Feet)	Y (Feet)	Z (Feet)	Y (Feet)	EW (Feet)	NS (Feet)
1	-12.3	29.6	10.6	27.5	22.9	-2.1
2	-10.1	26.2	10.4	27.4	20.5	1.2
3	-9.6	27.1	10.0	28.5	19.6	1.4
4	-4.0	26.6	7.8	26.7	11.8	0.1
5	-4.0	26.6	7.8	26.7	11.8	0.1
6	-9.8	27.3	10.1	28.8	19.9	1.5
7	-8.8	27.5	7.1	27.5	15.9	0.0

TABLE 3.7.2-43

EAST STEAM VALVE ROOM
MASS POINT PROPERTIES

Mass Point No.	Total Weight (Kips)	Equipment Weight (Kips)	Weight, Moment of Inertia North-South (K/Ft^2)	East-West (K/Ft^2)	About Vertical Axis (K/Ft^2)
1	3513.0	843.0	1.281E06	3.553E05	1.112E05
2	495.3	102.3	1.803E05	2.882E04	2.530E05
3	380.6	12.6	1.658E05	2.405E04	1.979E05
4	387.0	19.0	1.418E05	2.092E04	1.702E05
5	394.0	4.0	1.296E05	1.974E04	1.500E05
6	397.6	6.6	1.519E05	2.239E04	1.775E05
7	258.0	0.0	1.165E05	1.697E04	1.333E05
8	197.0	135.0	2.937E04	4.317E03	3.367E04

TABLE 3.7.2-44

EAST STEAM VALVE ROOM
SPRING CONSTANTS FOR COMBINED CAISSON-SOIL SYSTEM

	Translation		Rotation		
Case	North-South	East-West	North-South	East-West	Vertical
0.5 G	1.87E05	1.87E05	1.63E09	3.6E08	1.76E06
G	3.41E05	3.41E05	1.83E09	4.56E08	1.76E06
1.5 G	5.42E05	5.42E05	2.1E09	5.84E08	1.76E06

Units: Kips, feet, radians.

TABLE 3.7.2-45

EAST STEAM VALVE ROOM
FREQUENCY COMPARISON FOR THREE SOIL CASES
HORIZONTAL MOTION

	Case					
	0.5 G		G		1.5 G	
Frequency No.	Frequency (Hz)	*	Frequency (Hz)	*	Frequency (Hz)	*
1	2.68	0.75	2.71	0.71	2.73	0.69
2	7.91	-1.04	8.13	-0.81	8.19	-0.51
3	8.56	1.84	9.04	1.46	9.32	0.64
4	9.33	1.07	9.54	0.93	9.96	0.53
5	11.39	-0.46	11.72	-0.51	12.35	-0.78
6	15.69	-0.03	15.69	-0.03	15.70	-0.03
7	18.22	-0.03	18.23	-0.04	18.26	-0.06
8	19.76	-0.02	20.00	-0.02	20.22	-0.02
9	20.66	-0.18	21.17	-0.26	21.87	-0.35
10	23.94	-0.02	24.23	-0.02	24.62	-0.03

*Participation factor.

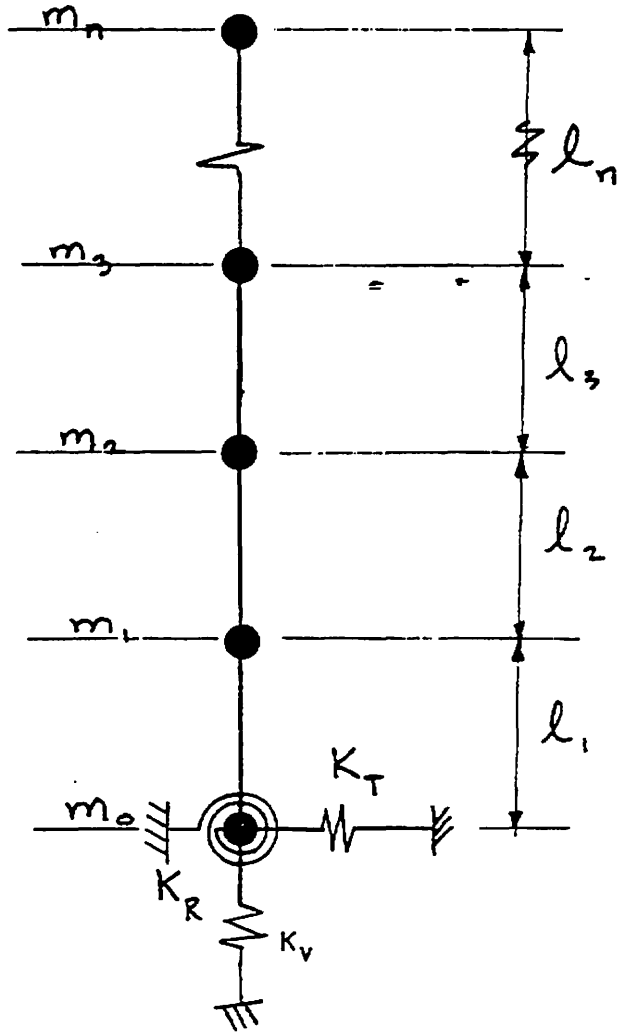

SEQUOYAH NUCLEAR PLANT
FINAL SAFETY
ANALYSIS REPORT

MATHEMATICAL MODEL
FOR SOIL-STRUCTURE INTERACTION
FIGURE 3.7.1-1

Revised by Amendment 13

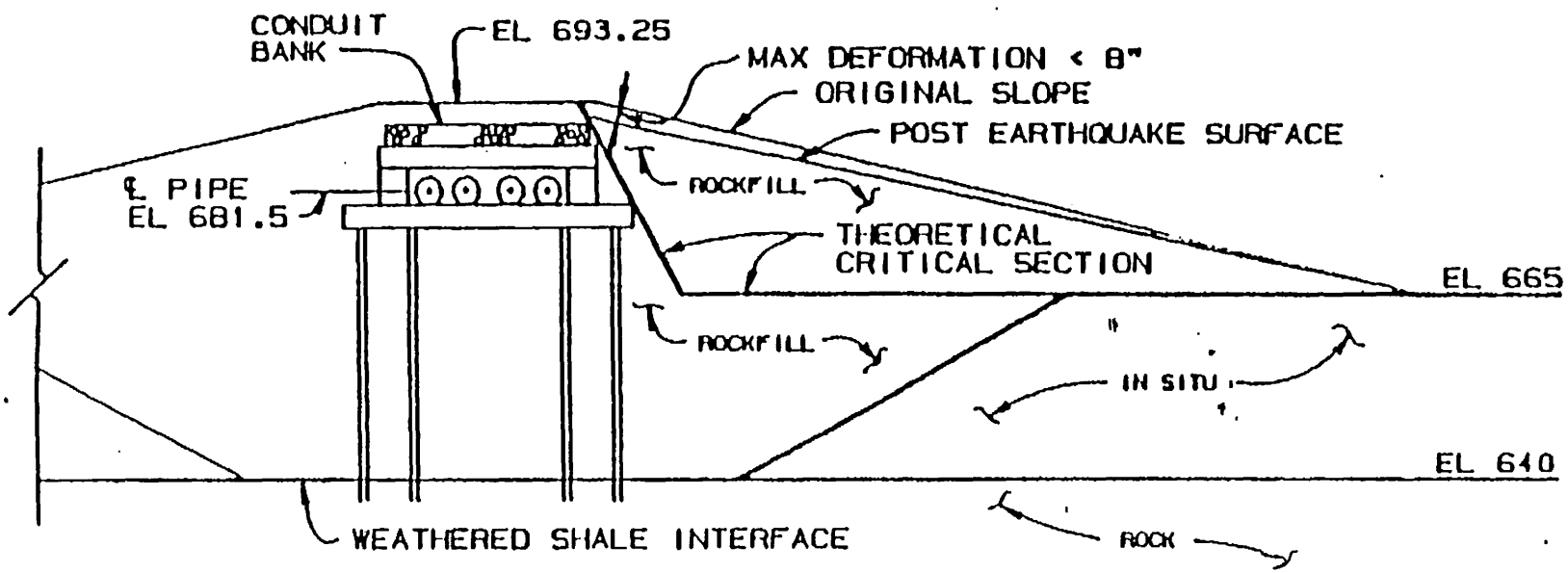

ERCW ACCESS DIKE

FIGURE 3.7.1-2

Revised by Amendment 13

K_{rs} = RADIAL SUPPORT SPRING CONSTANT

K_{rot} = ROTATIONAL GROUND SPRING CONSTANT

K_t = TRANSLATIONAL GROUND SPRING CONSTANT

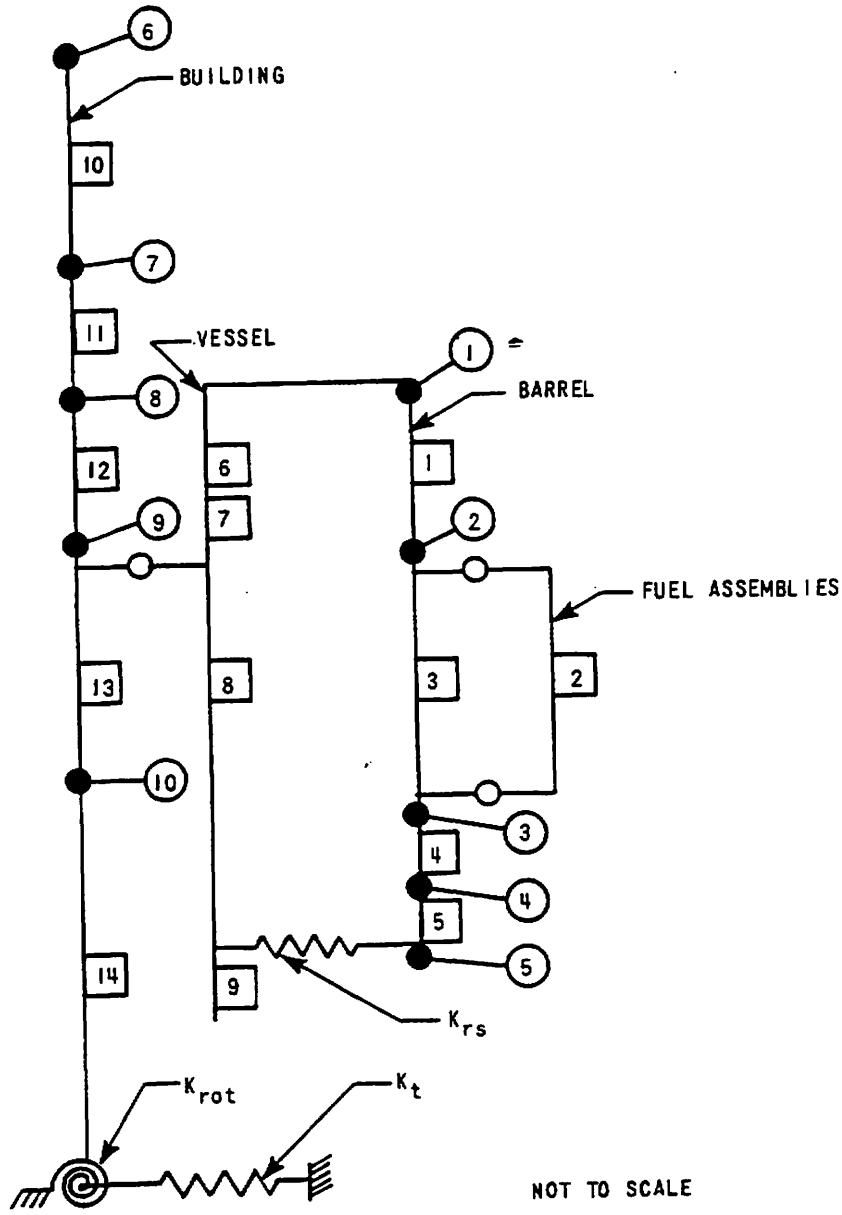

SEQUOYAH NUCLEAR PLANT
FINAL SAFETY
ANALYSIS REPORT

MATHEMATICAL MODEL
OF REACTOR INTERNALS

Figure 3.7.2-1

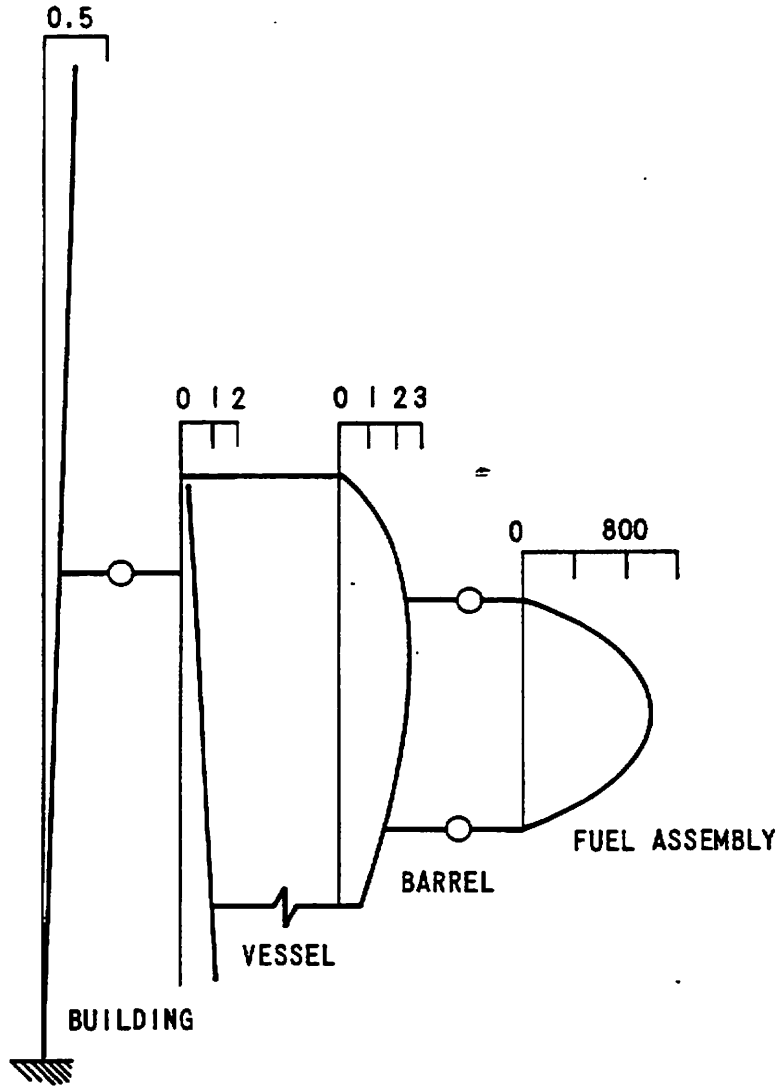

SEQUOYAH NUCLEAR PLANT
FINAL SAFETY
ANALYSIS REPORT

FIRST MODE OF
VIBRATION OF REACTOR INTERNALS

Figure 3.7.2-2

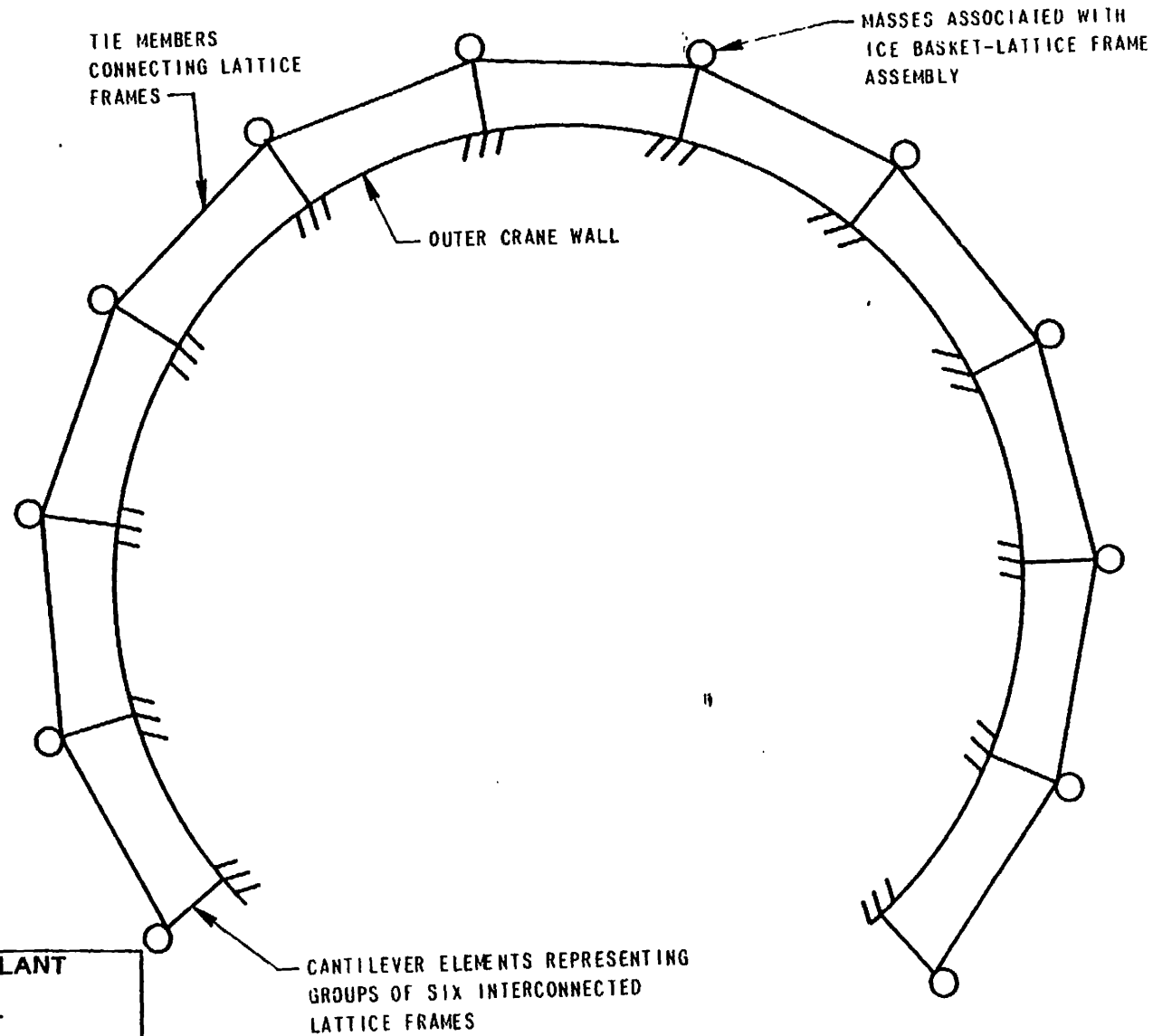

SEQUOYAH NUCLEAR PLANT
FINAL SAFETY
ANALYSIS REPORT

MODEL OF HORIZONTAL
LATTICE FRAME STRUCTURE

Figure 3.7.2-3

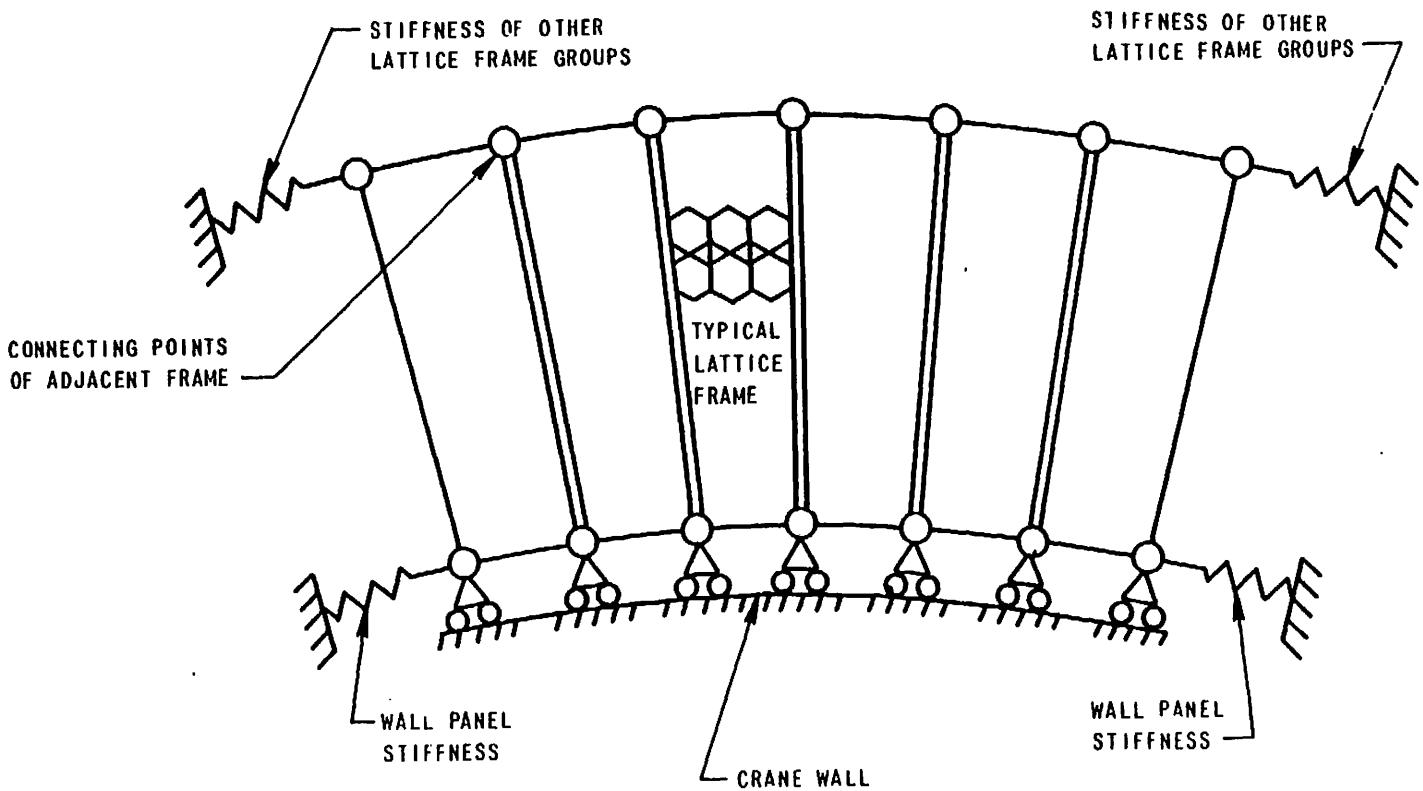

SEQUOYAH NUCLEAR PLANT
FINAL SAFETY
ANALYSIS REPORT

GROUP OF SIX INTERCONNECTED
LATTICE FRAMES

Figure 3.7.2-4

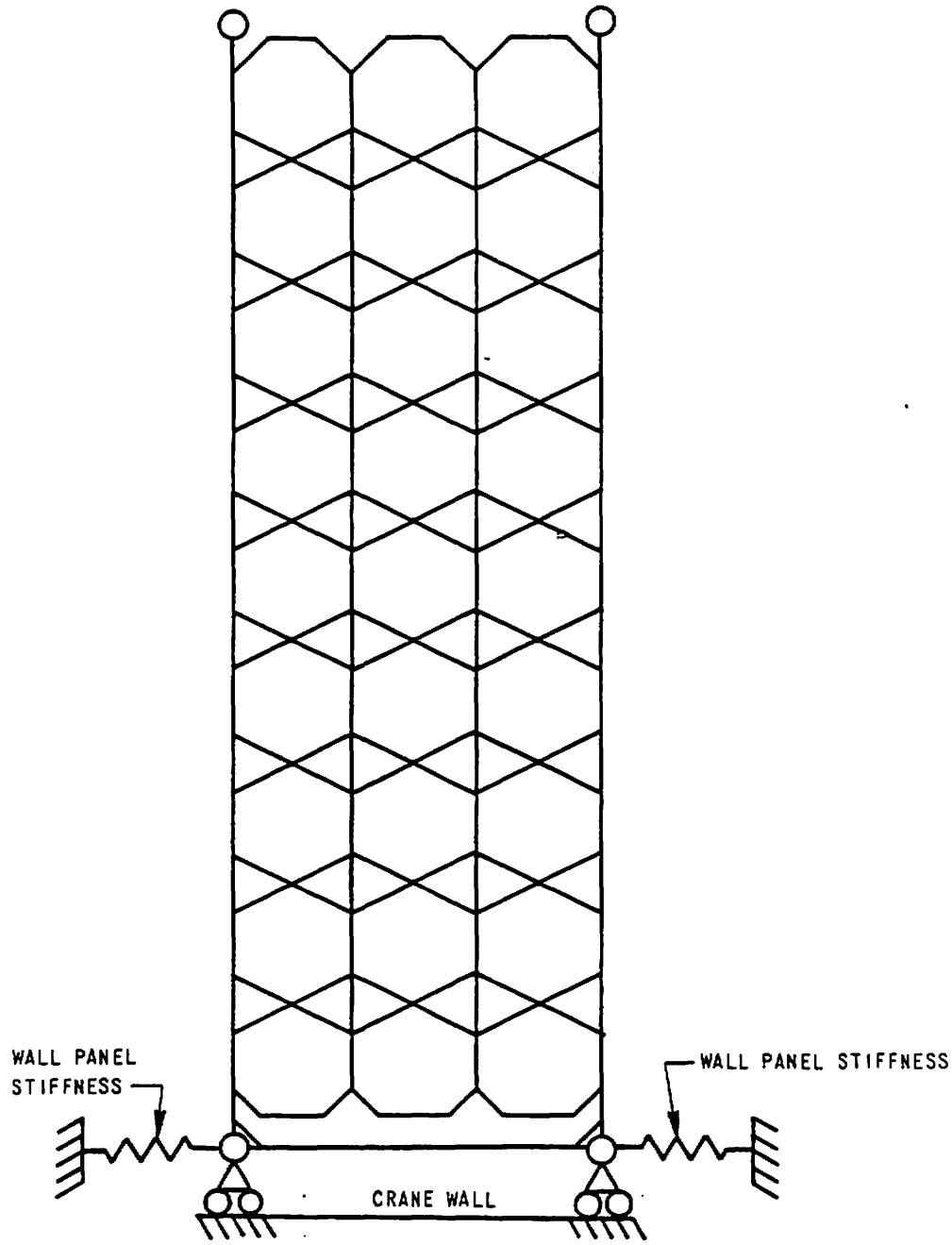

SEQUOYAH NUCLEAR PLANT
FINAL SAFETY
ANALYSIS REPORT

TYPICAL MODEL OF
LATTICE FRAME

Figure 3.7.2-5

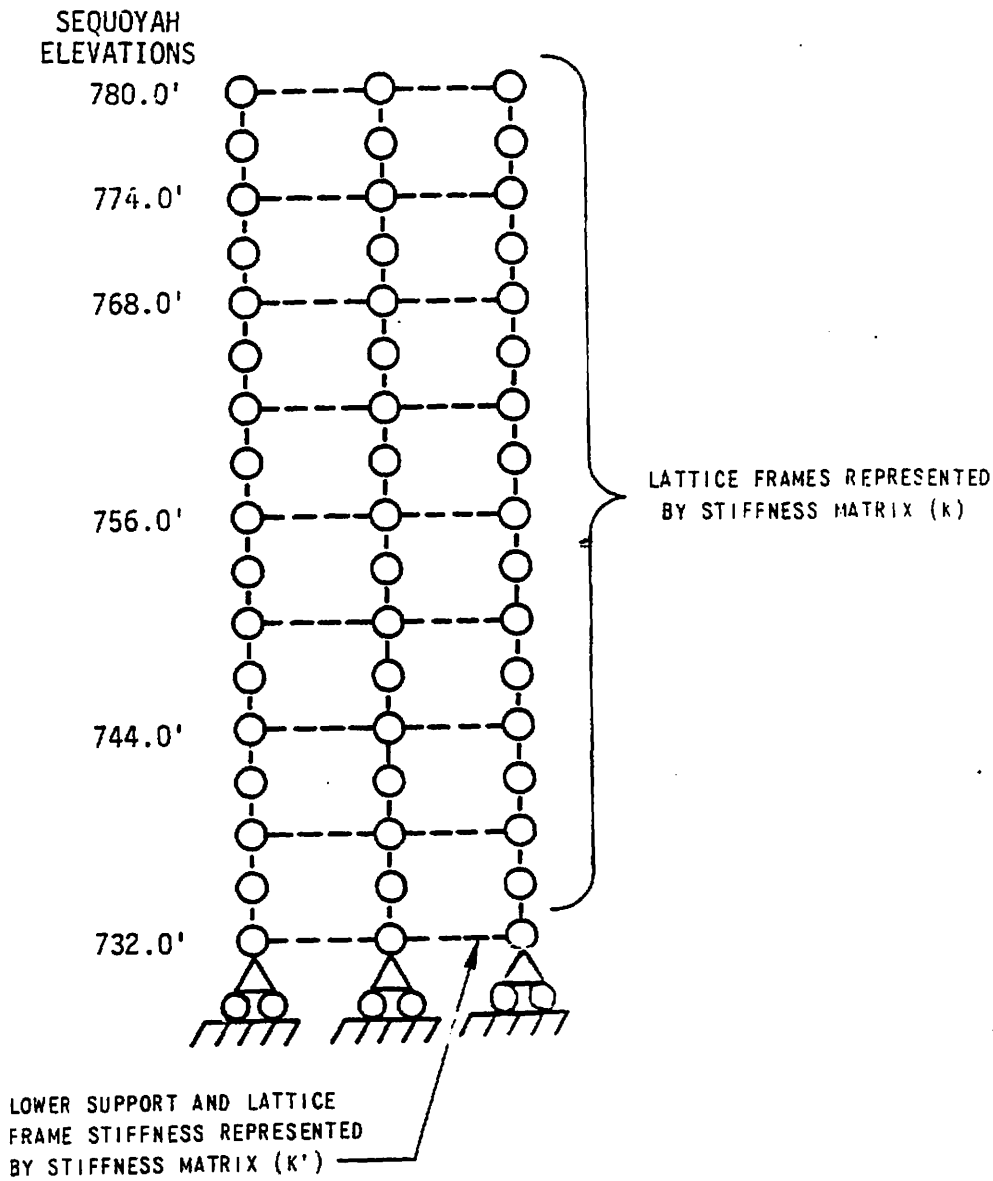

SEQUOYAH NUCLEAR PLANT
FINAL SAFETY
ANALYSIS REPORT

TYPICAL MULTI-LEVEL
HORIZONTAL DYNAMIC MODEL OF
LATTICE FRAME BASKET ASSEMBLY
Figure 3.7.2-6

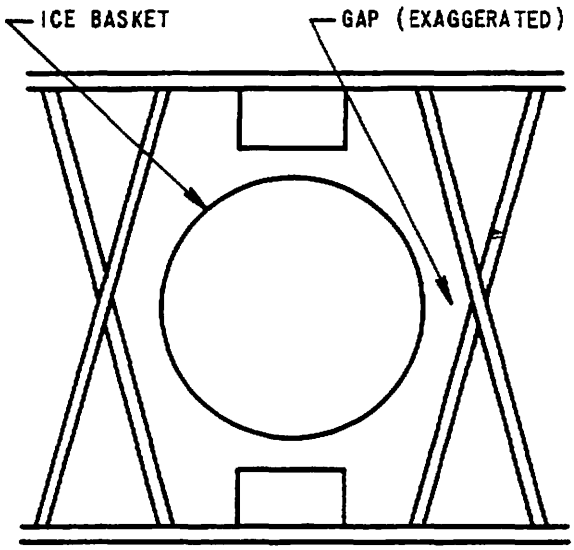

TOP VIEW

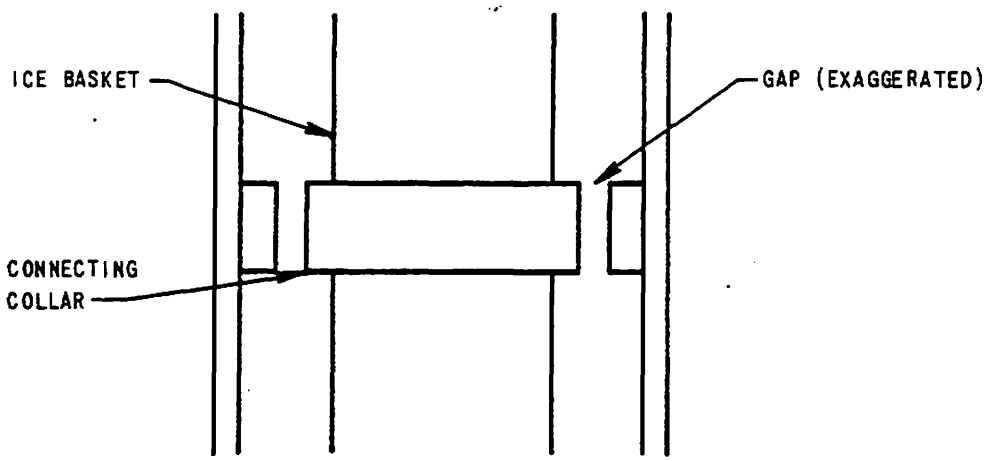

SIDE VIEW

SEQUOYAH NUCLEAR PLANT
FINAL SAFETY
ANALYSIS REPORT

LATTICE FRAME
ICE BASKET GAP

Figure 3.7.2-7

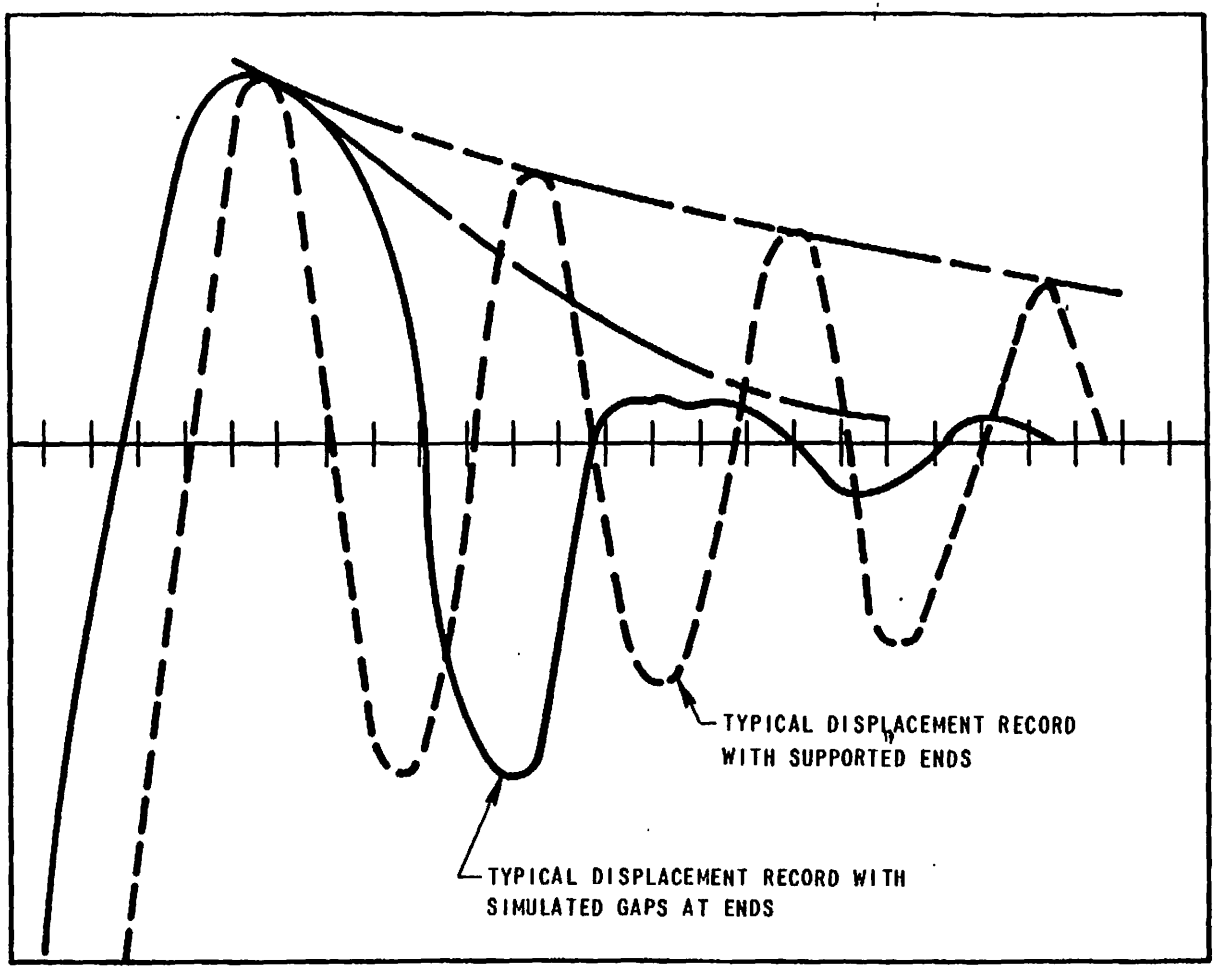

SEQUOYAH NUCLEAR PLANT
FINAL SAFETY
ANALYSIS REPORT

TYPICAL DISPLACEMENT TIME HISTORIES FOR 12' BASKET WITH END SUPPORTS - PLUCK TEST

Figure 3.7.2-8

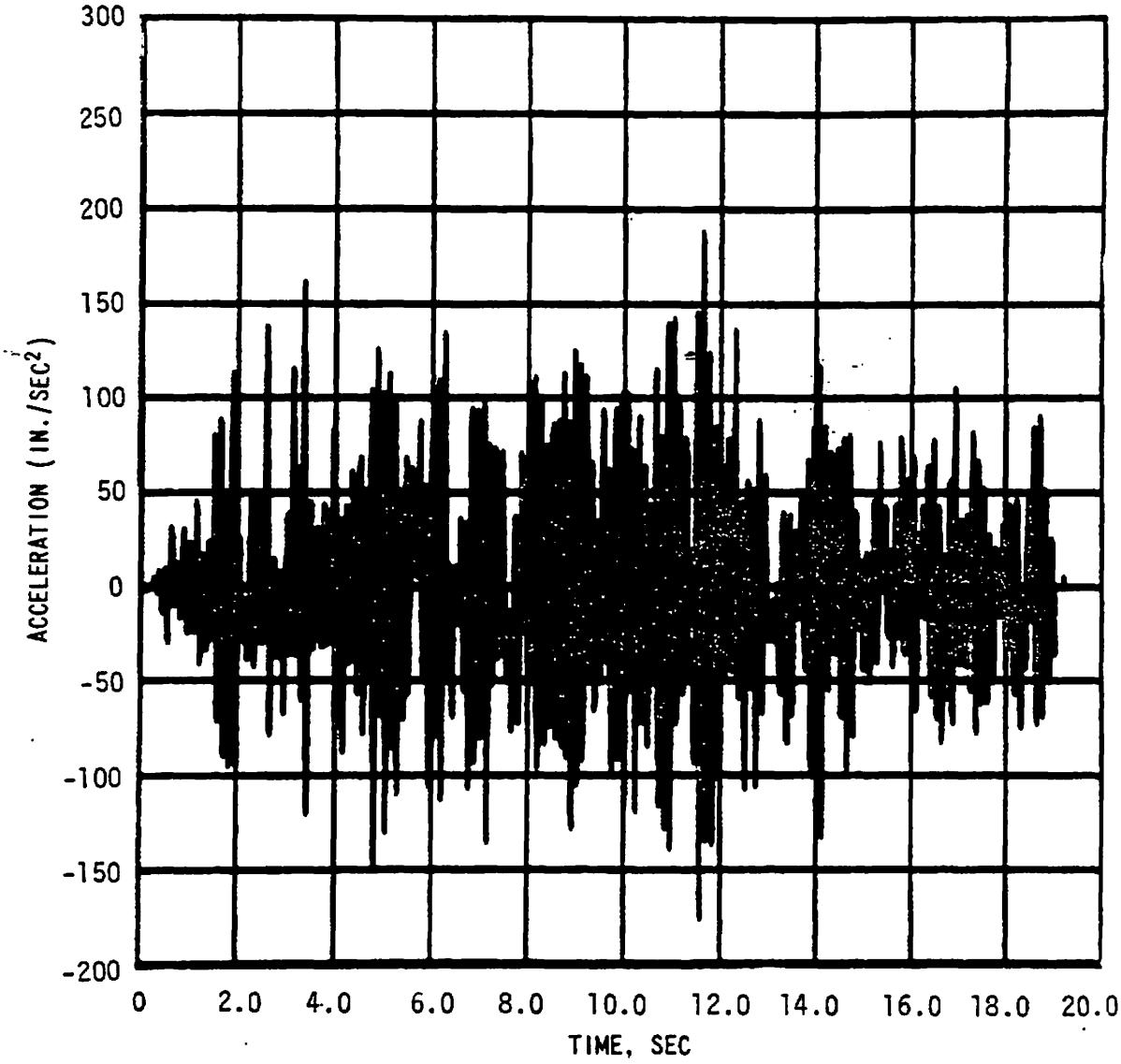

SEQUOYAH NUCLEAR PLANT
FINAL SAFETY
ANALYSIS REPORT

TYPICAL CRANE
WALL ACCELERATION

Figure 3.7.2-9

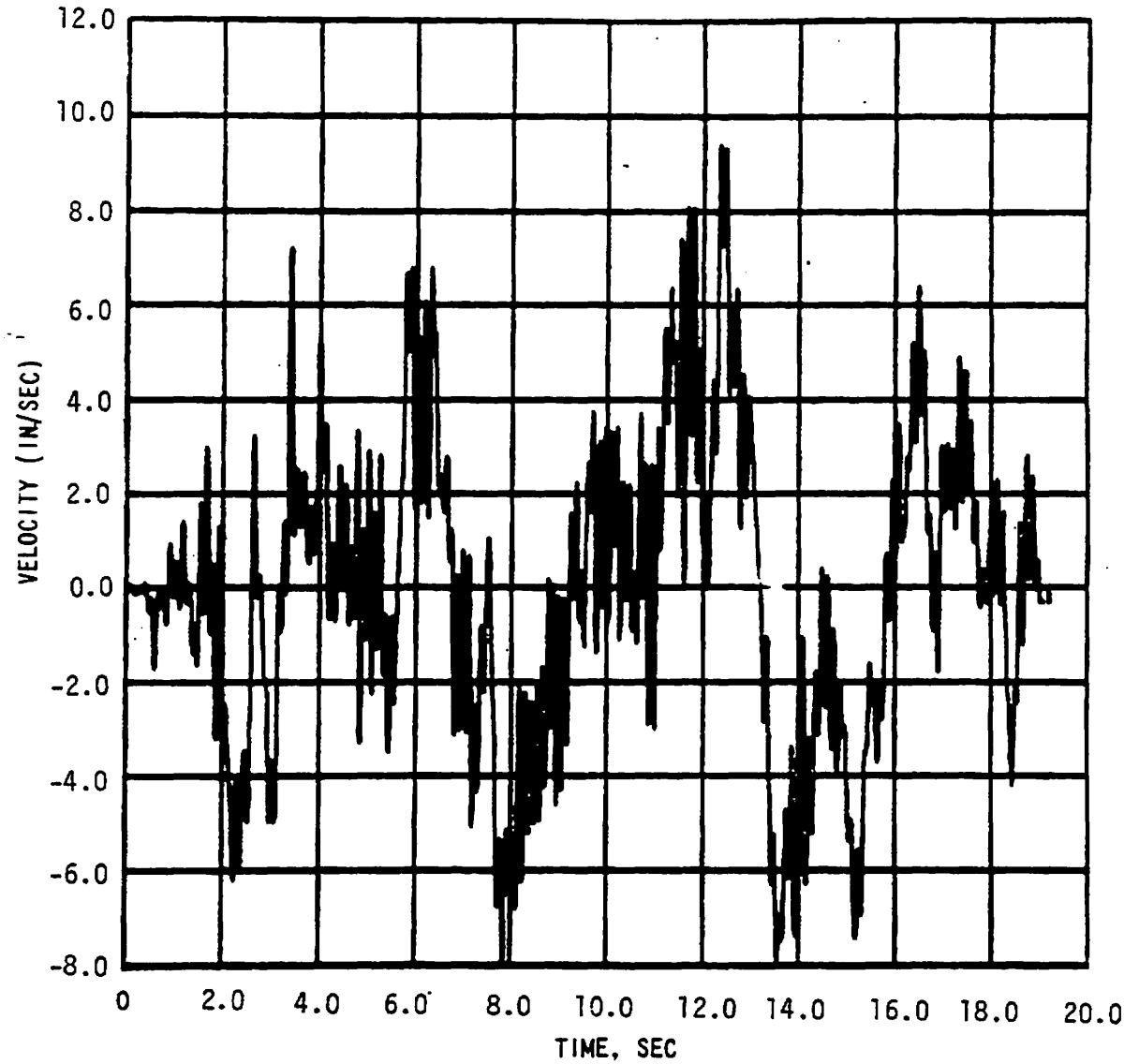

SEQUOYAH NUCLEAR PLANT
FINAL SAFETY
ANALYSIS REPORT

TYPICAL CRANE
WALL VELOCITY

Figure 3.7.2-10

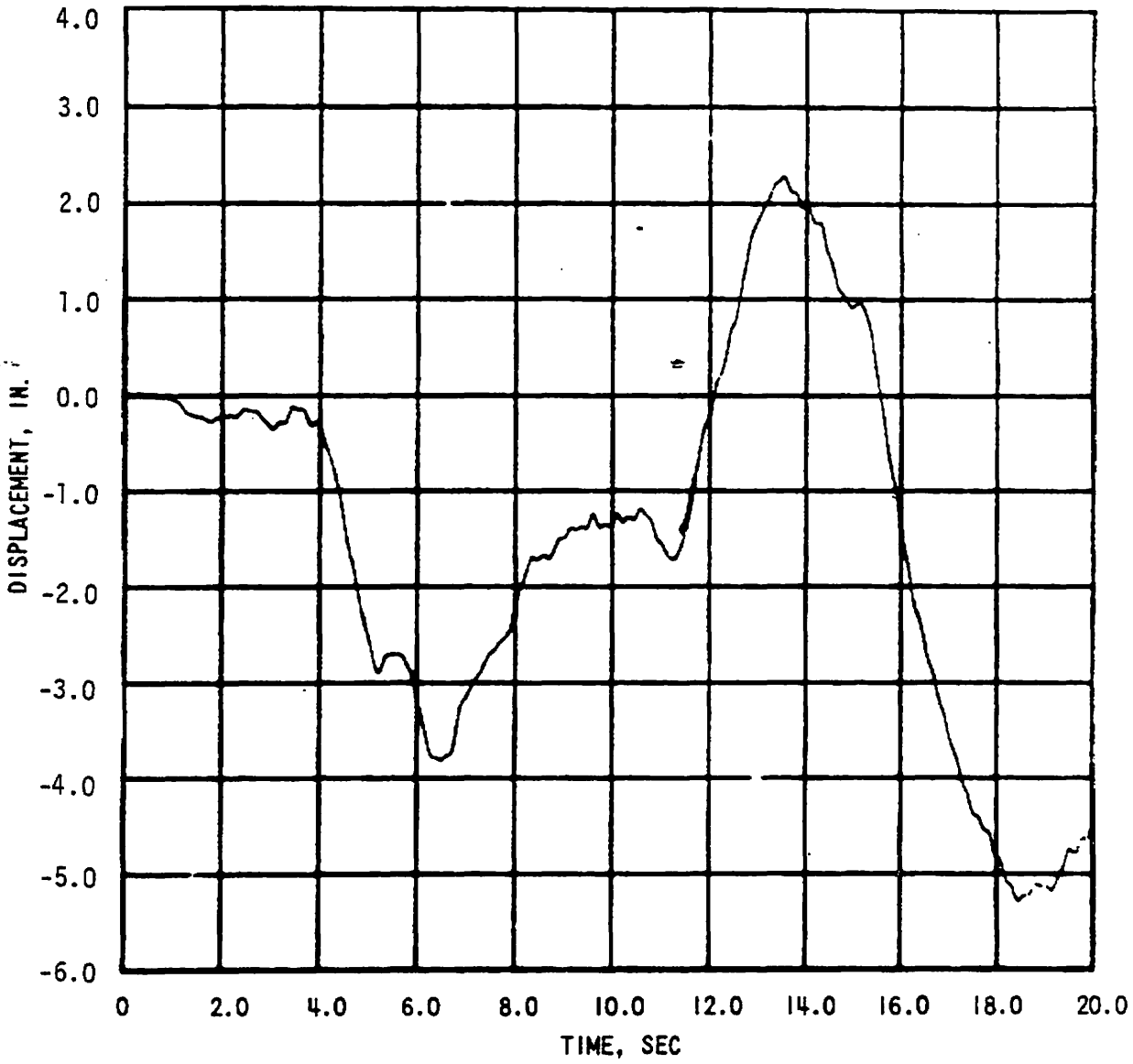

SEQUOYAH NUCLEAR PLANT
FINAL SAFETY
ANALYSIS REPORT

TYPICAL CRANE
WALL DISPLACEMENT

Figure 3.7.2-11

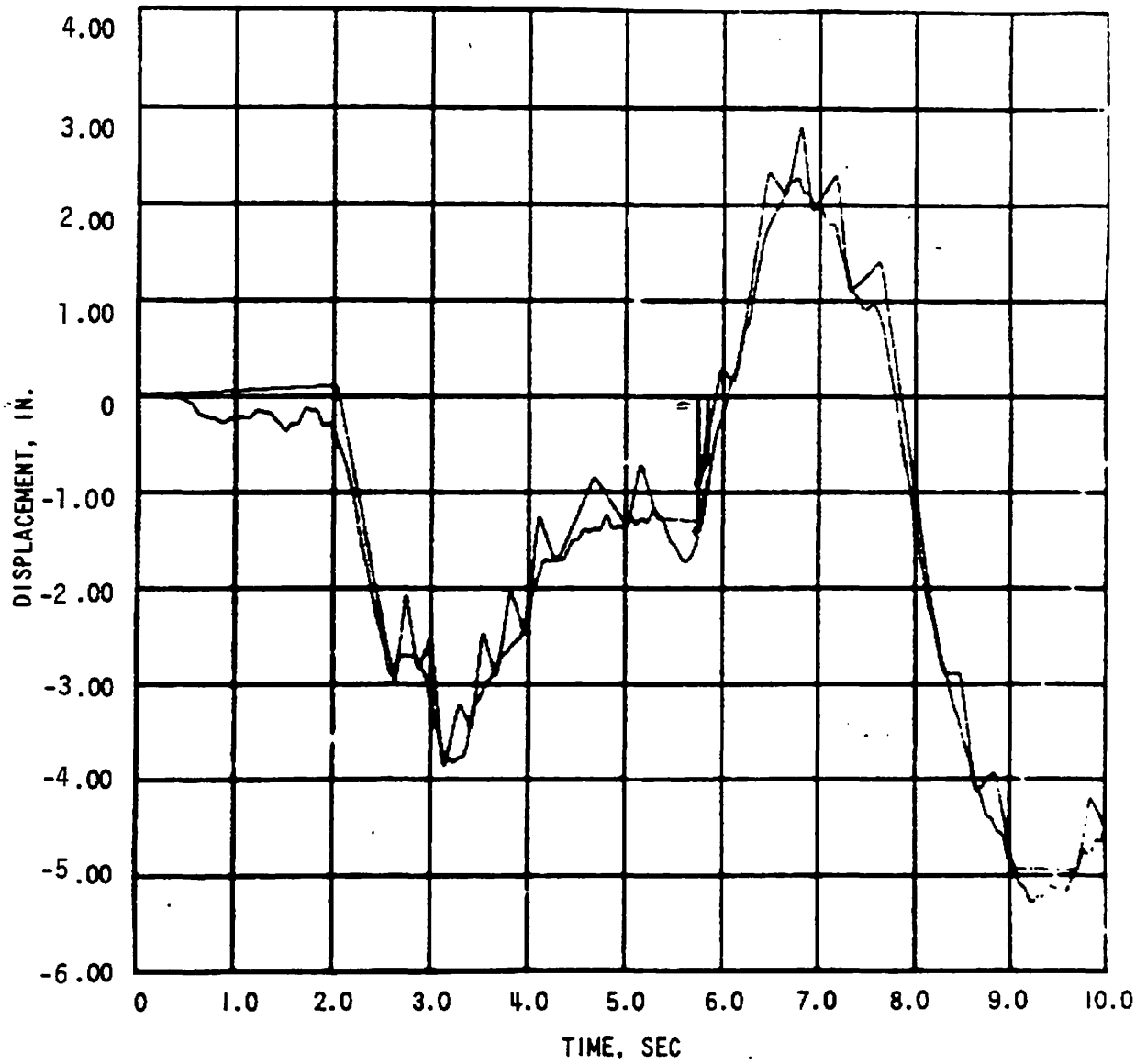

SEQUOYAH NUCLEAR PLANT
FINAL SAFETY
ANALYSIS REPORT

TYPICAL ICE BASKET
DISPLACEMENT RESPONSE

Figure 3.7.2-12

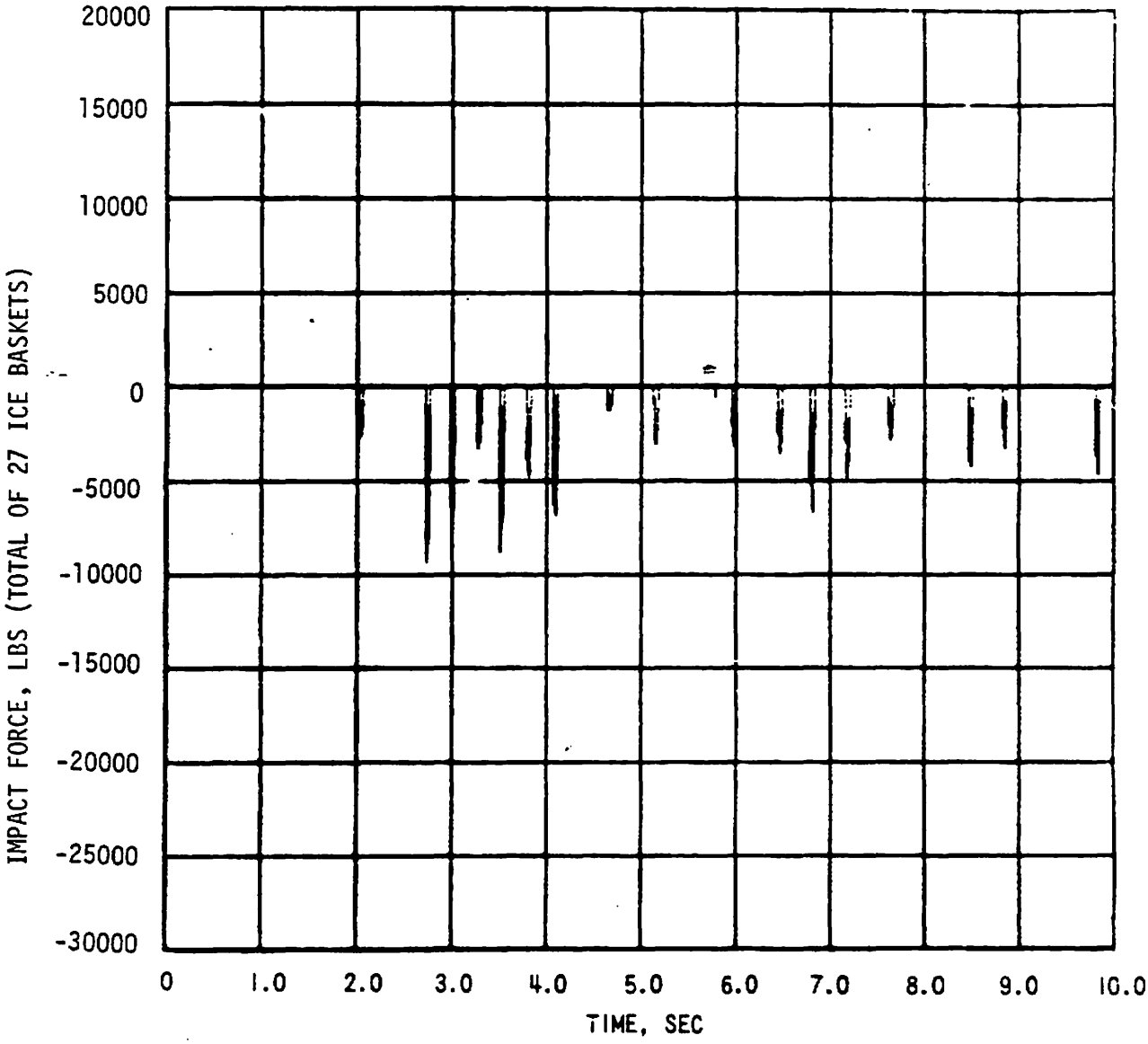

SEQUOYAH NUCLEAR PLANT
FINAL SAFETY
ANALYSIS REPORT

TYPICAL ICE BASKET
IMPACT FORCE RESPONSE

Figure 3.7.2-13

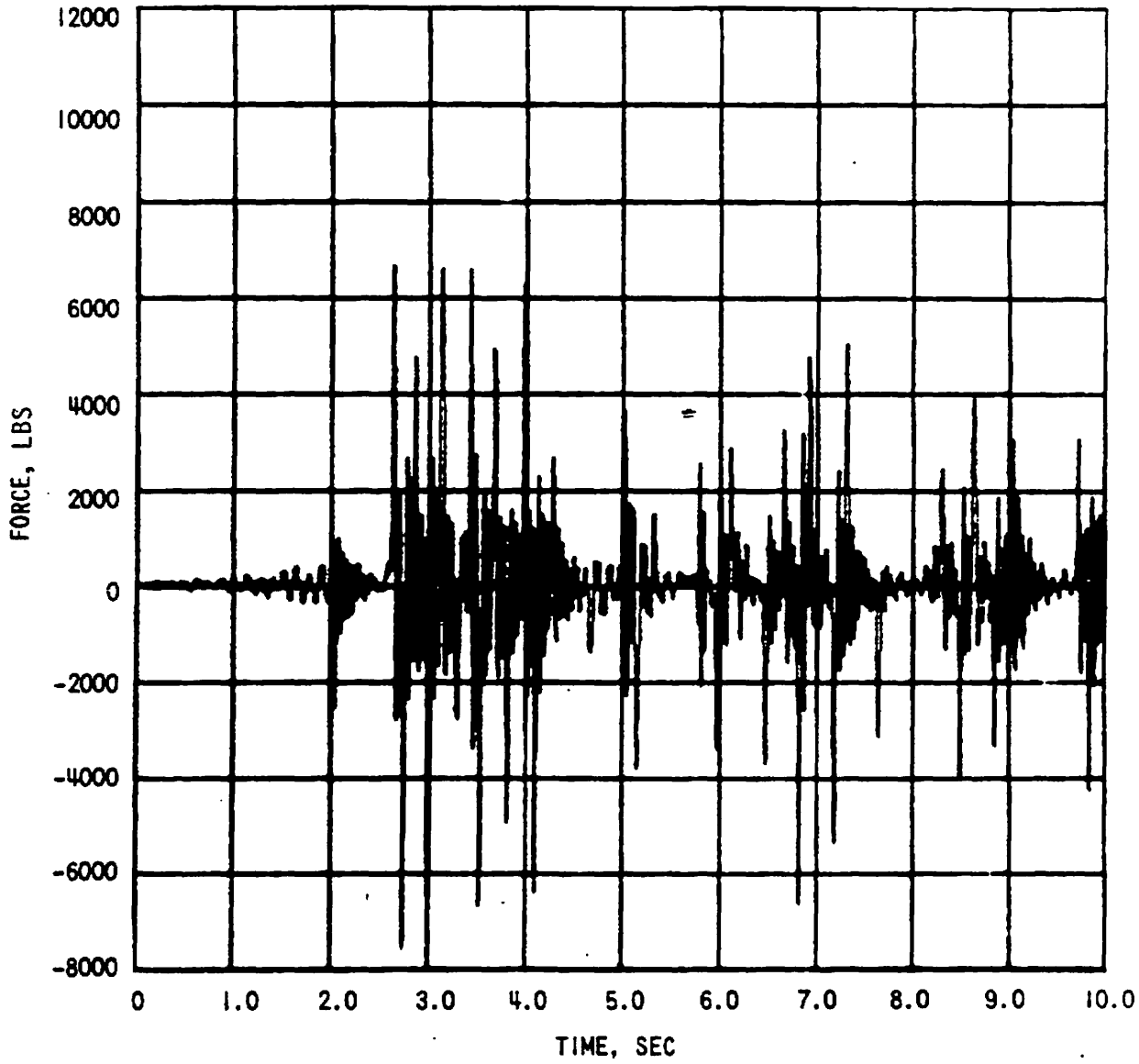

SEQUOYAH NUCLEAR PLANT
FINAL SAFETY
ANALYSIS REPORT

TYPICAL CRANE WALL
PANEL LOAD RESPONSE

Figure 3.7.2-14

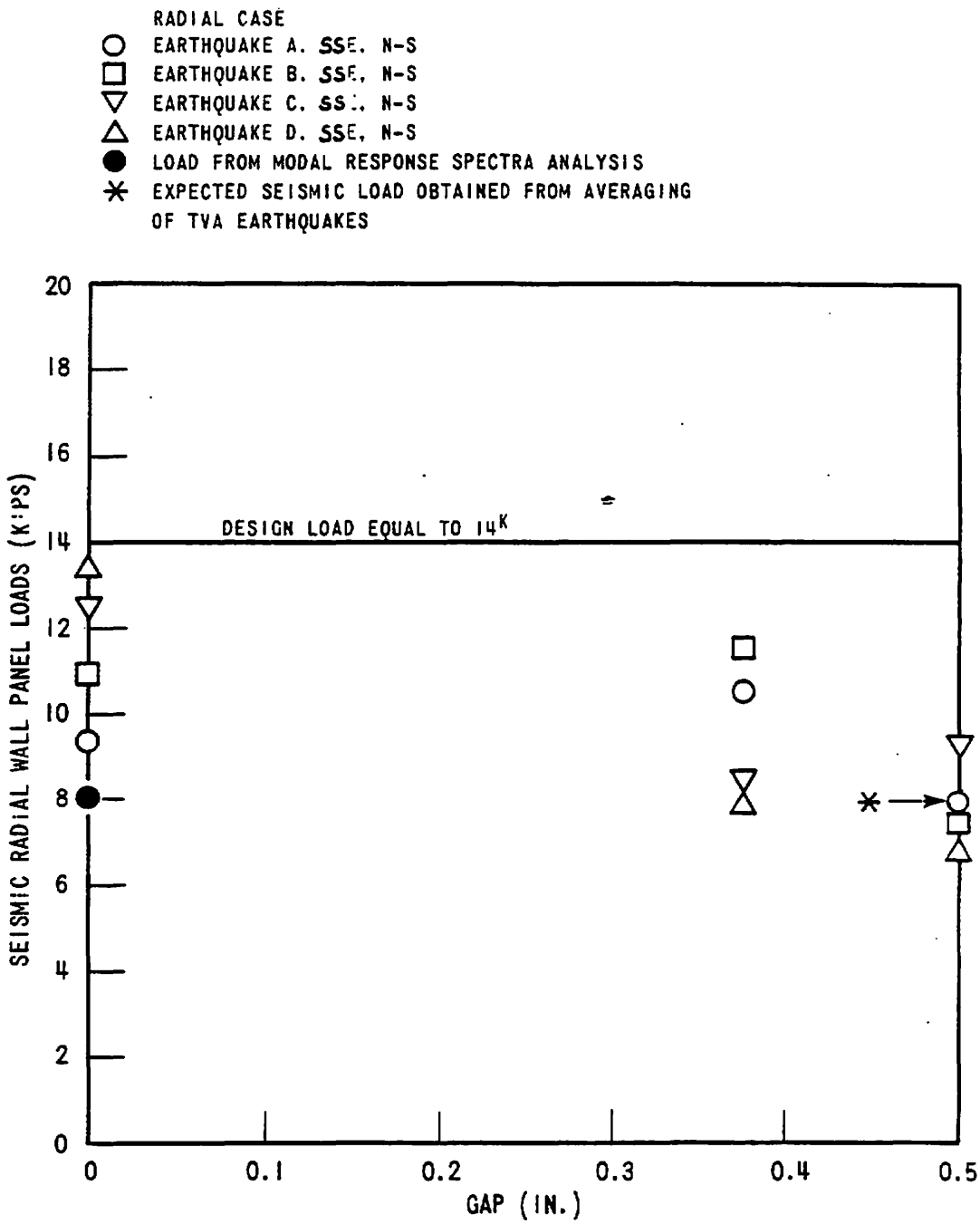

SEQUOYAH NUCLEAR PLANT
FINAL SAFETY
ANALYSIS REPORT

NONLINEAR DYNAMIC MODEL
RESULTS WALL PANEL
SEISMIC LOAD VERSUS GAP SIZE
Figure 3.7.2-15

Best Available Historical Image

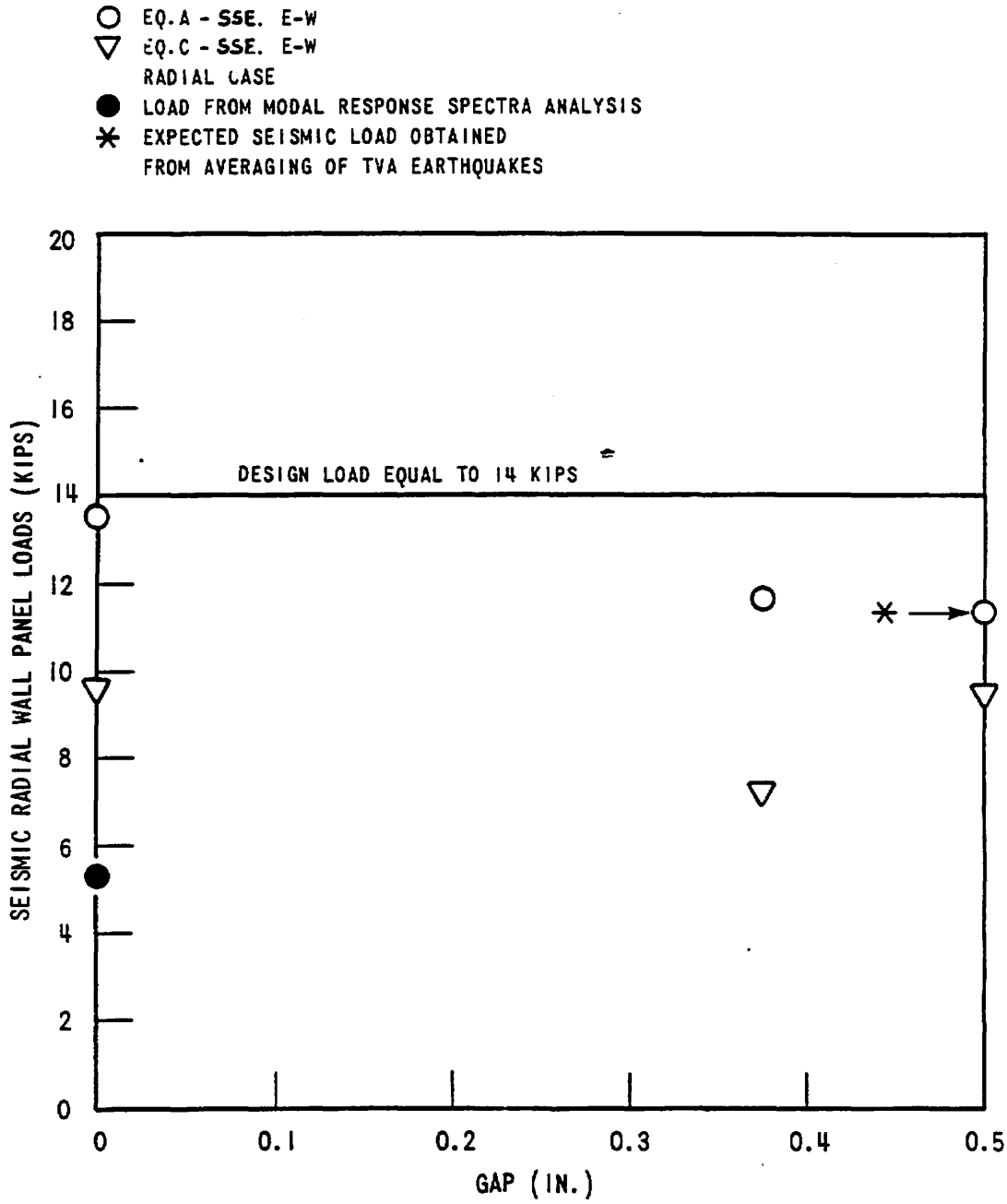

Figure 3.7.2-16 Nonlinear Dynamic Model Results Wall Panel Seismic Load versus Gap Size

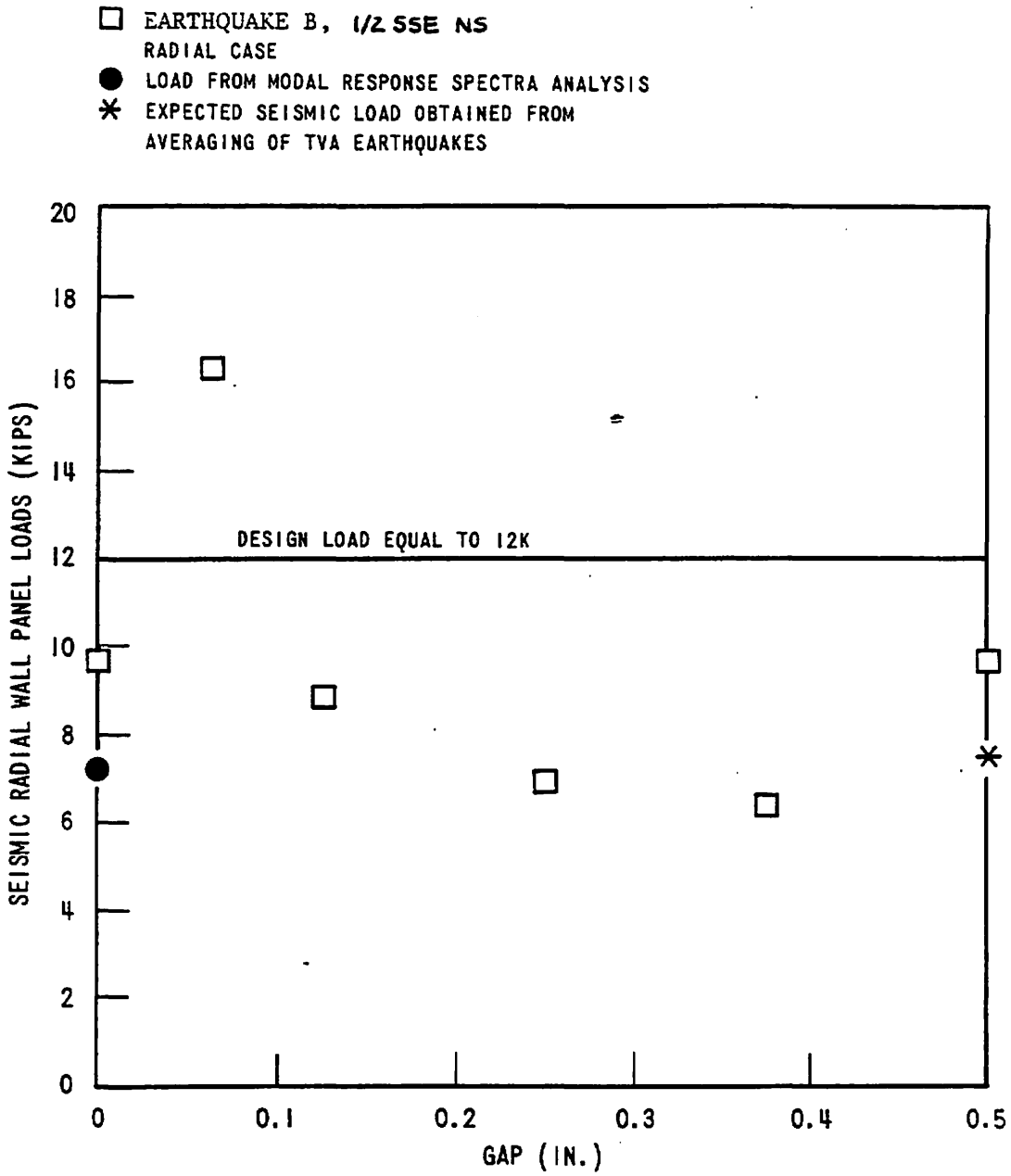

Figure 3.7.2-17 Nonlinear Dynamic Model Results Wall Panel Seismic Load versus Gap Size

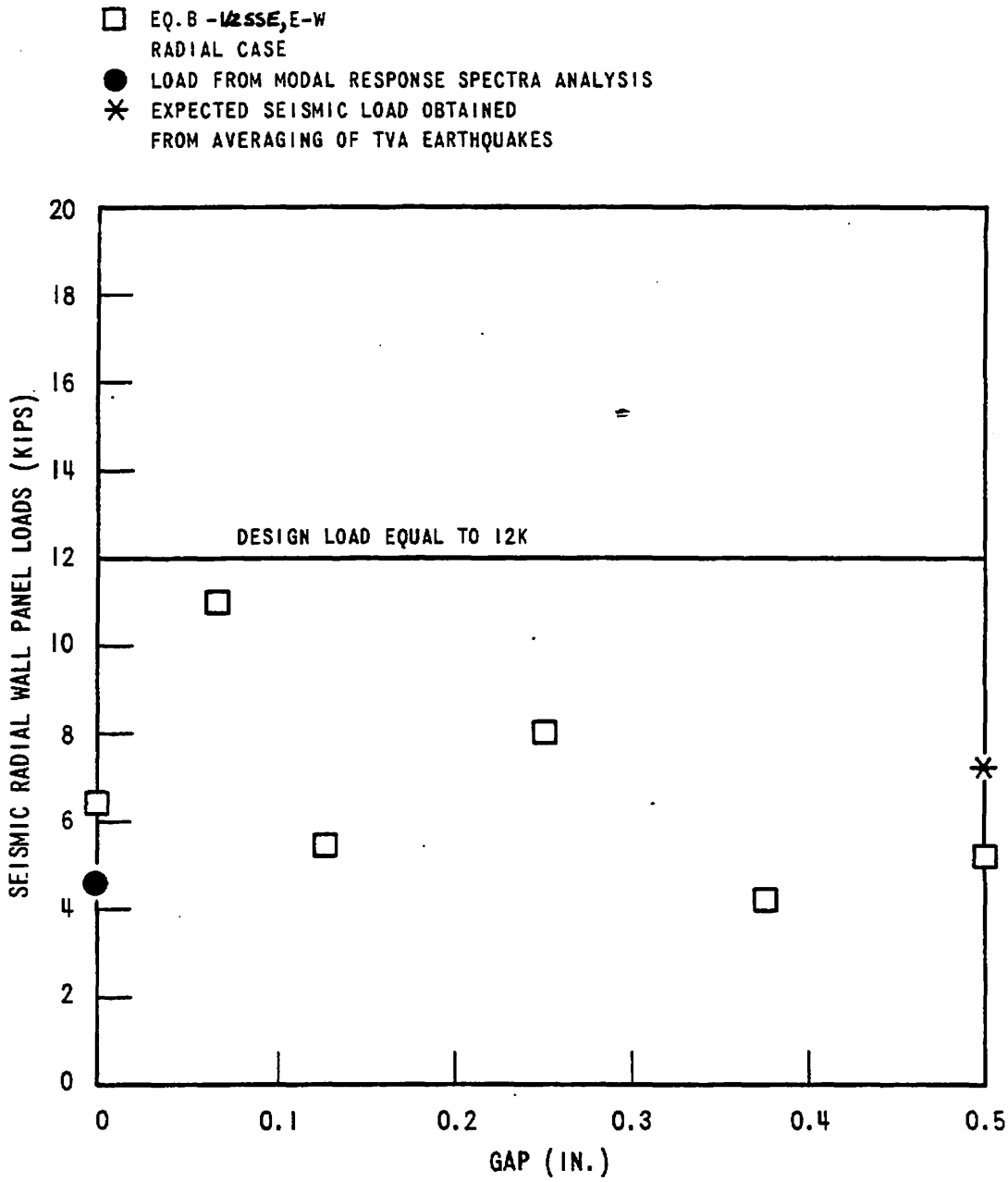

Figure 3.7.2-18 Nonlinear Dynamic Model Results Wall Panel Seismic Load versus Gap Size

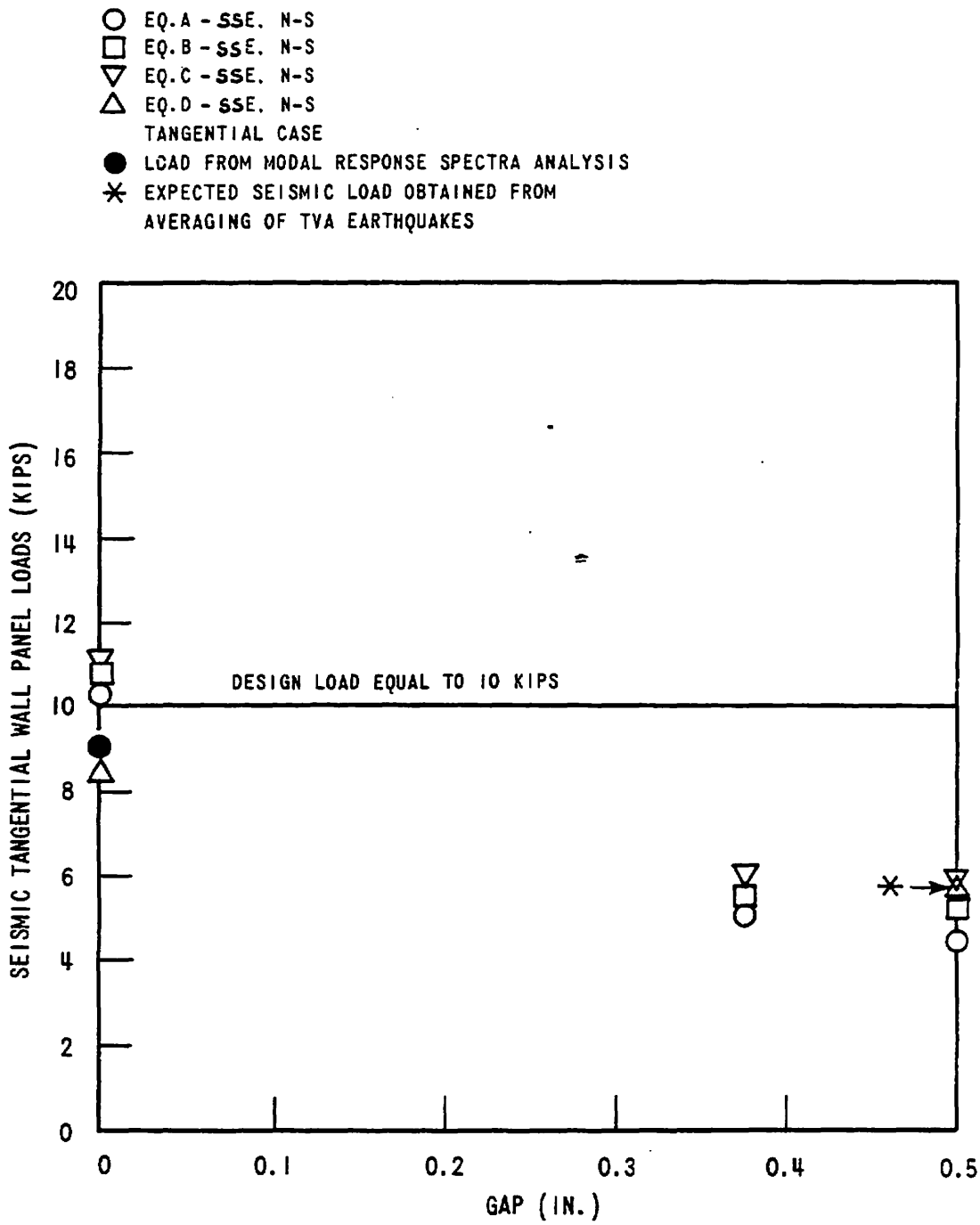

Figure 3.7.2-19 Nonlinear Dynamic Model Results Wall Panel Seismic Load versus Gap Size

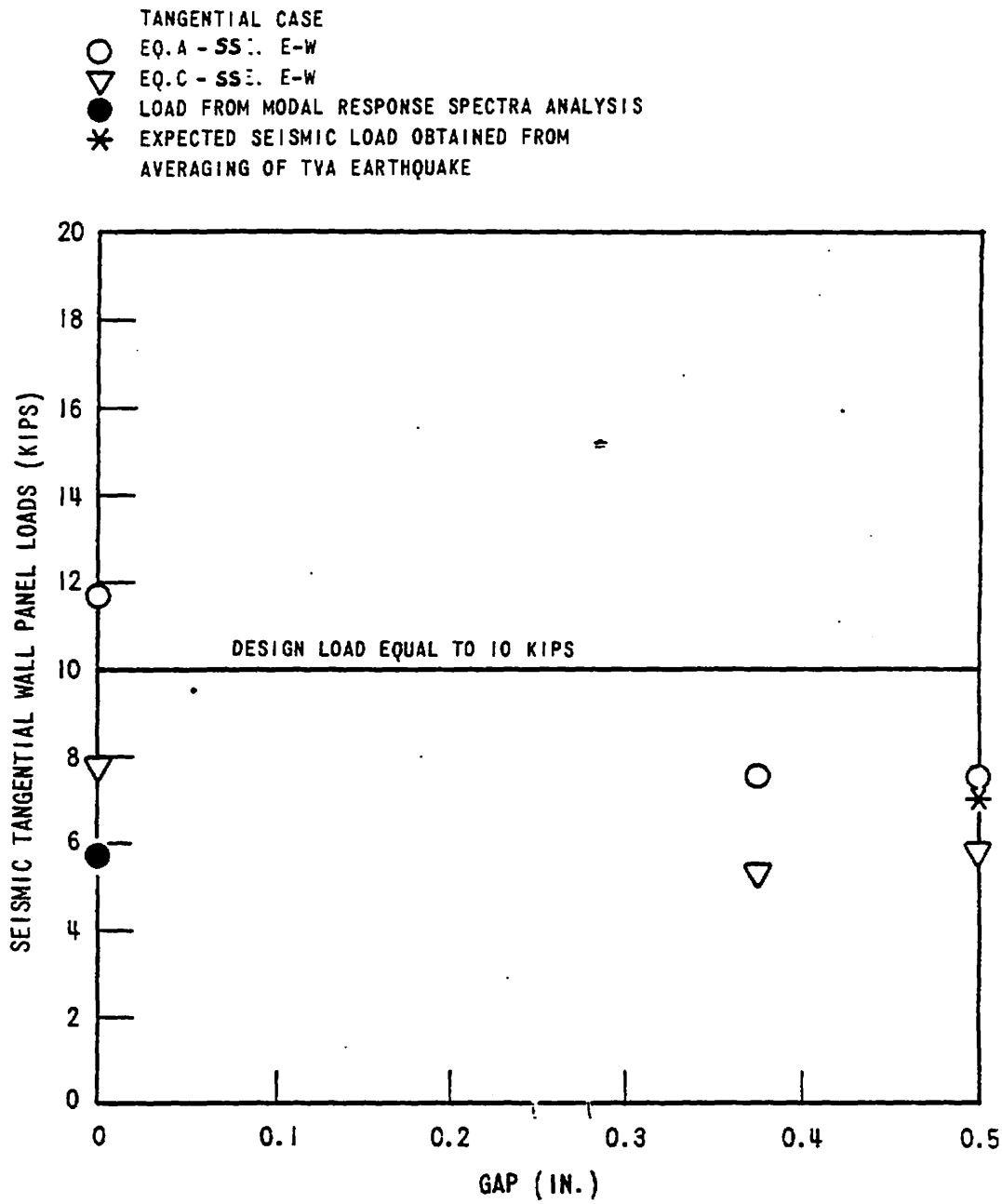

Figure 3.7.2-20 Nonlinear Dynamic Model Results Wall Panel Seismic Load versus Gap Size

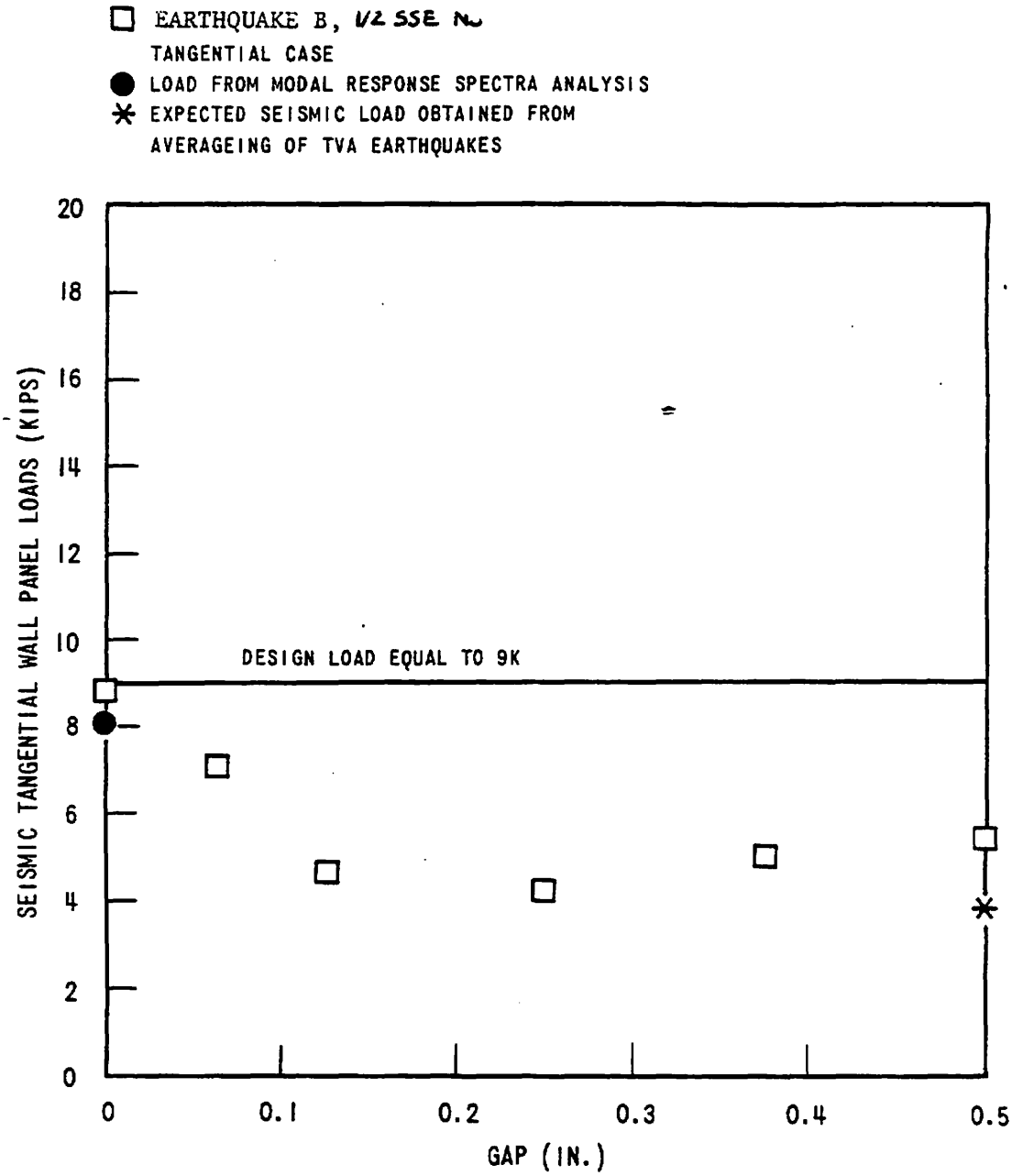

Figure 3.7.2-21 Nonlinear Dynamic Model Results Wall Panel Seismic Load versus Gap Size

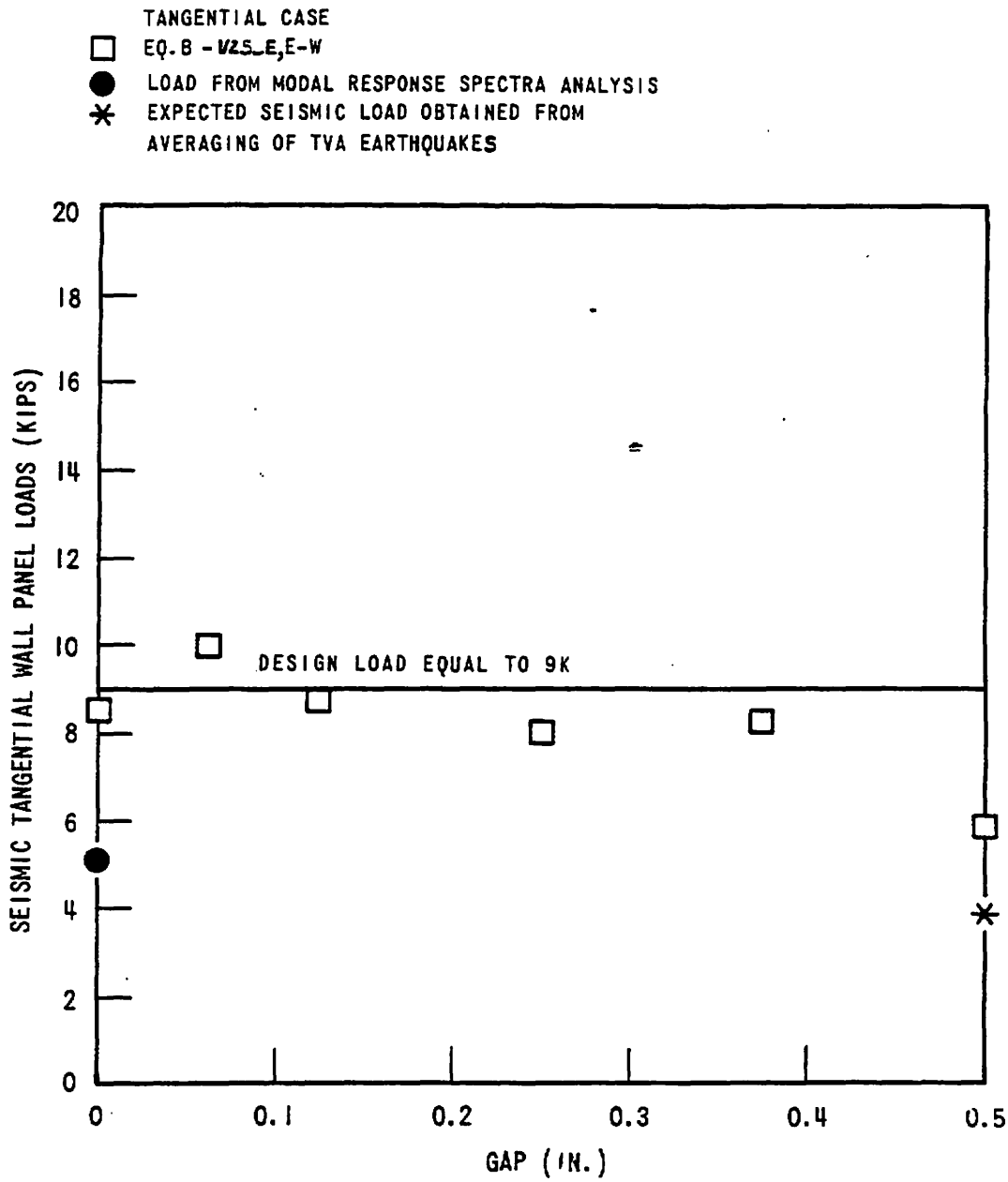

Figure 3.7.2-22 Nonlinear Dynamic Model Results Wall Panel Seismic Load versus Gap Size

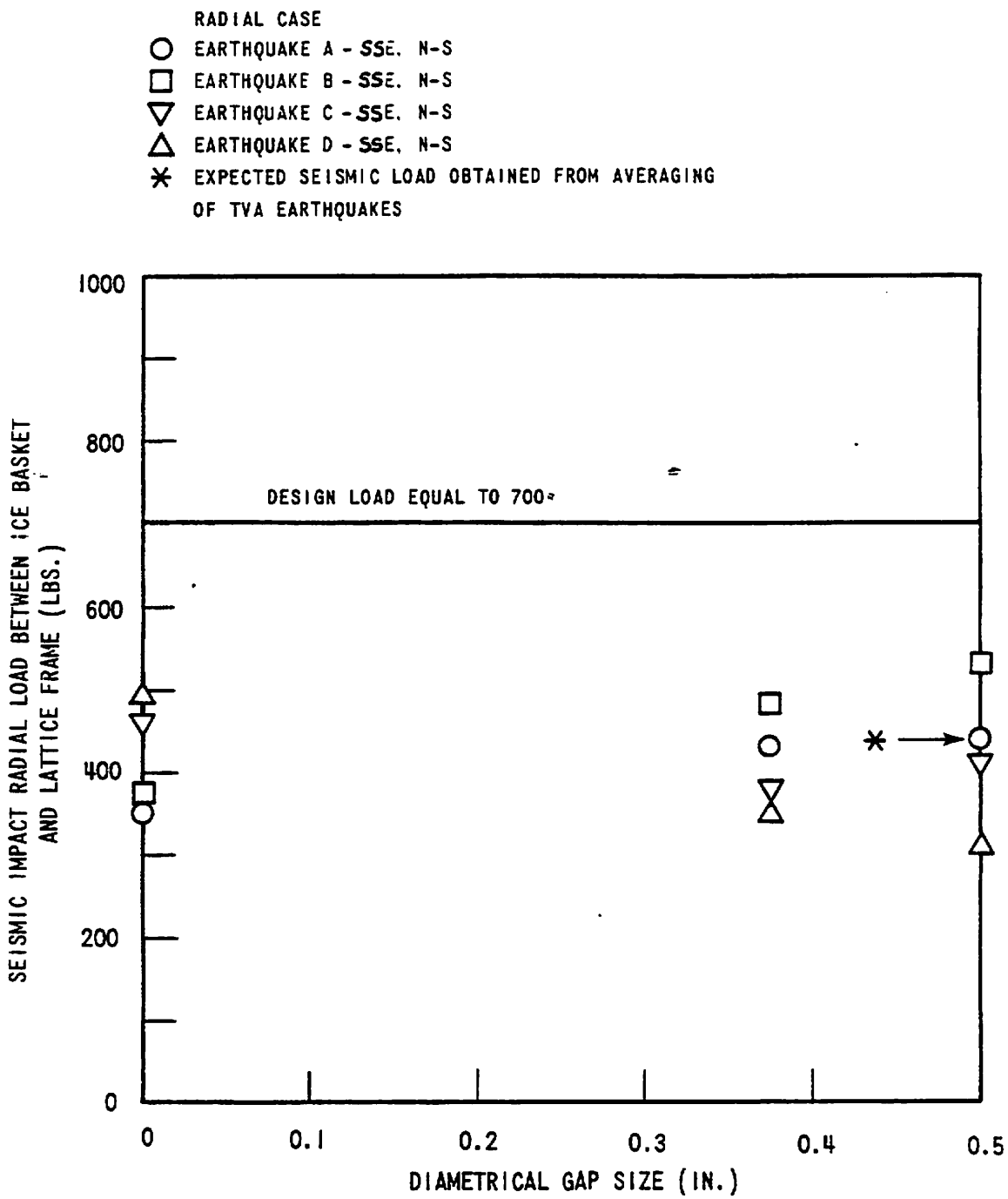

Figure 3.7.2-23 Nonlinear Dynamic Model Results
Seismic Impact Load versus Gap Size

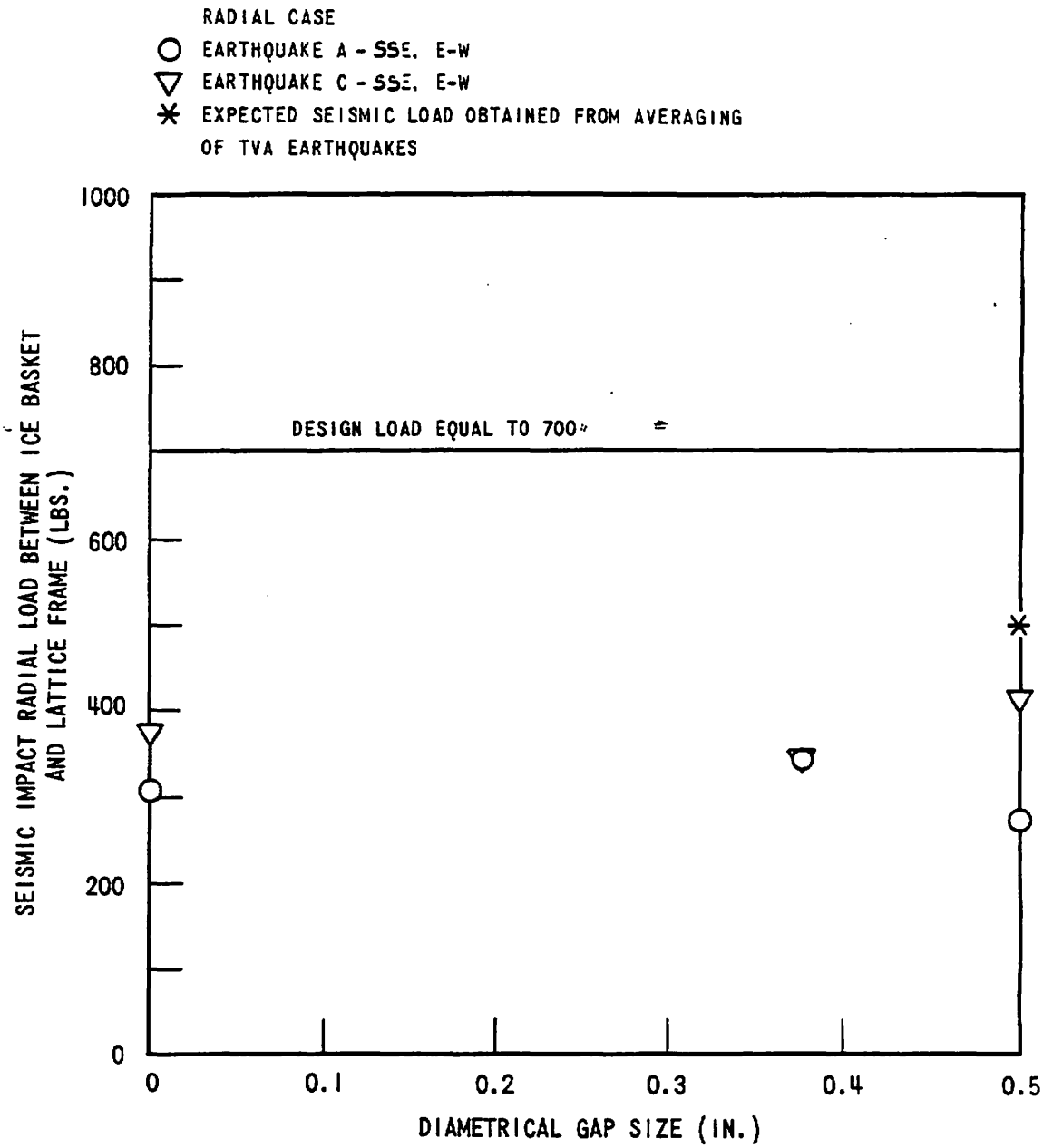

Figure 3.7.2-24 Nonlinear Dynamic Model Results
Seismic Impact Load versus Gap Size

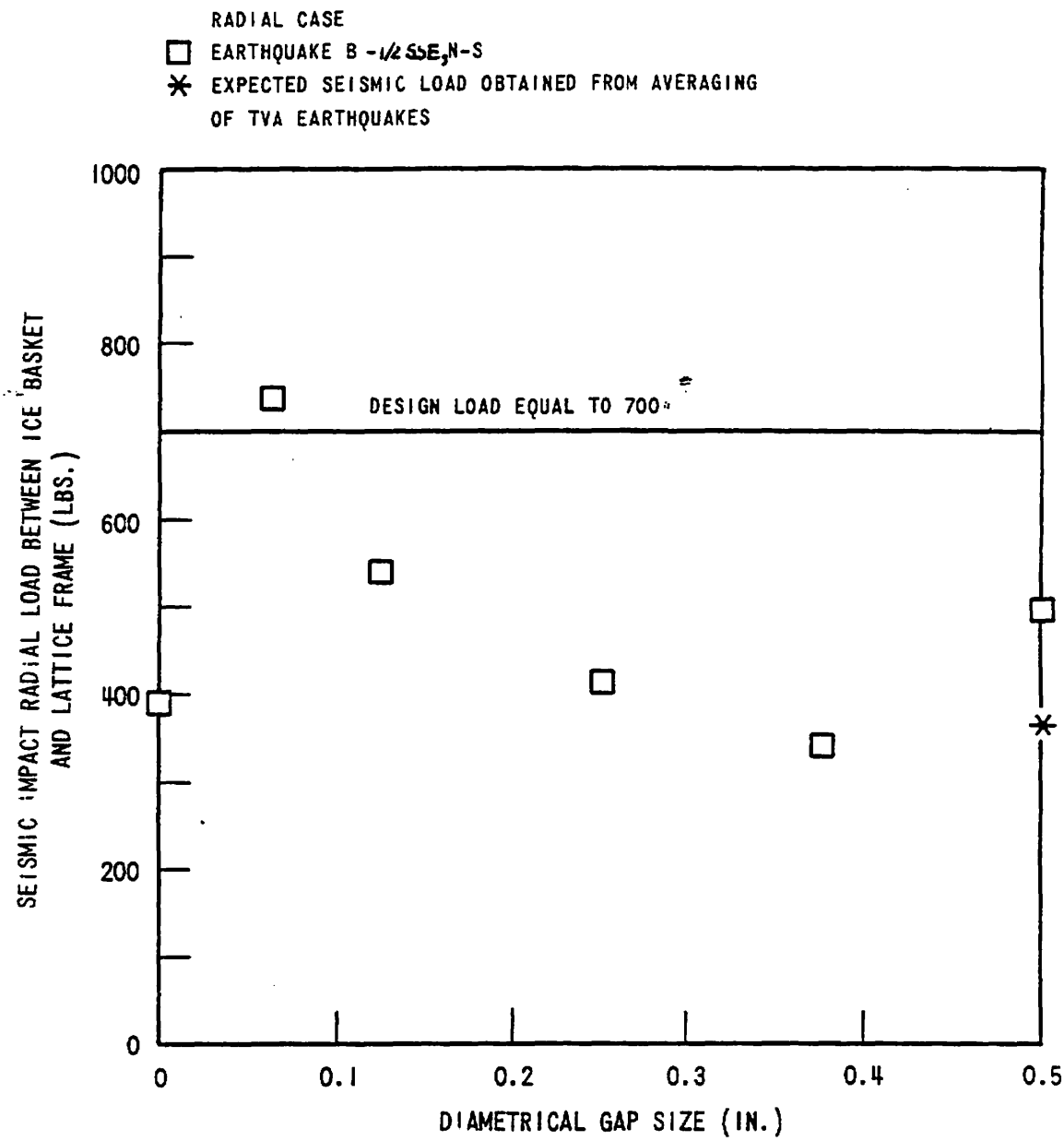

Figure 3.7.2-25 Nonlinear Dynamic Model Results
Seismic Impact Load versus Gap Size

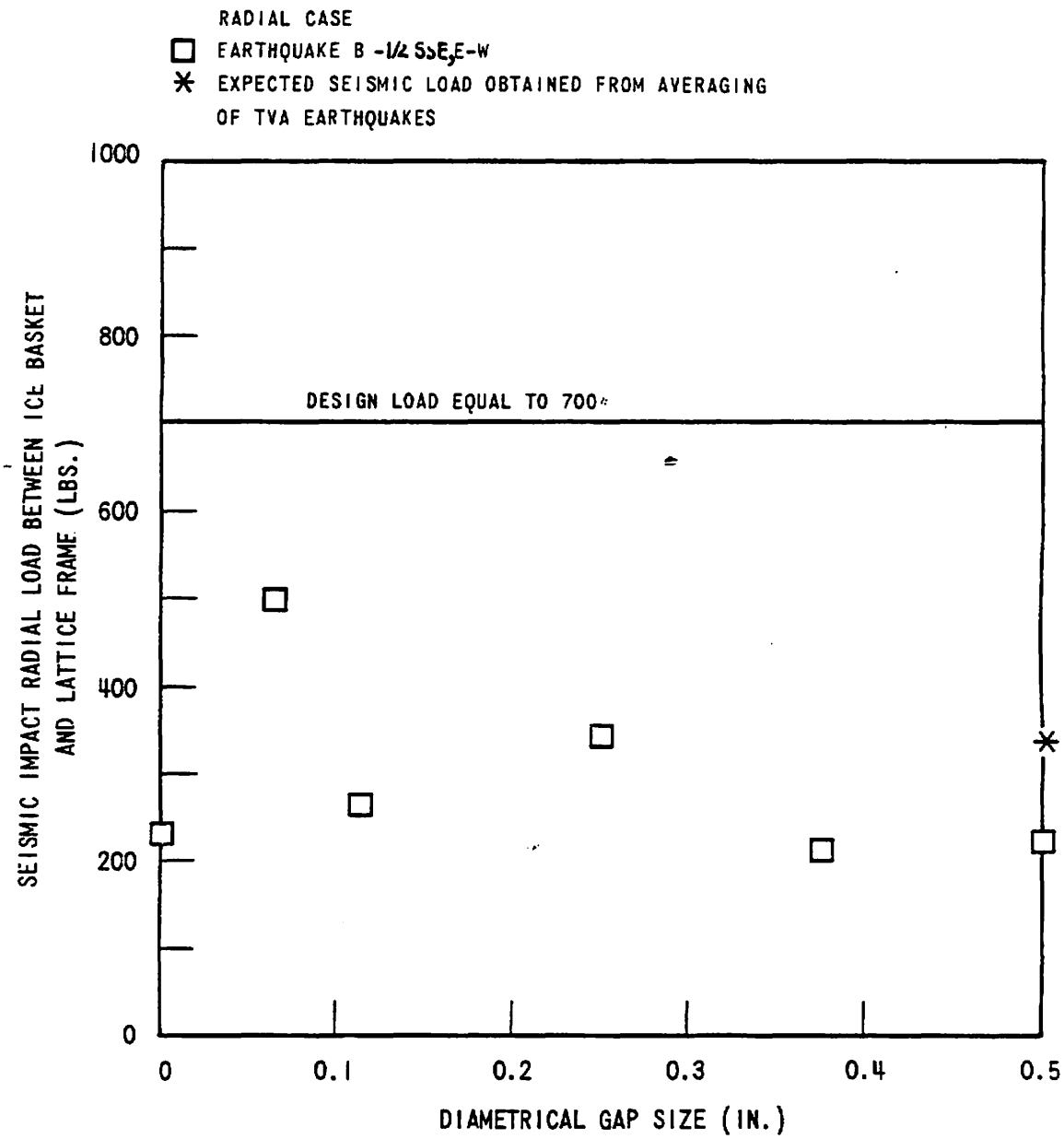

Figure 3.7.2-26 Nonlinear Dynamic Model Results
Seismic Impact Load versus Gap Size

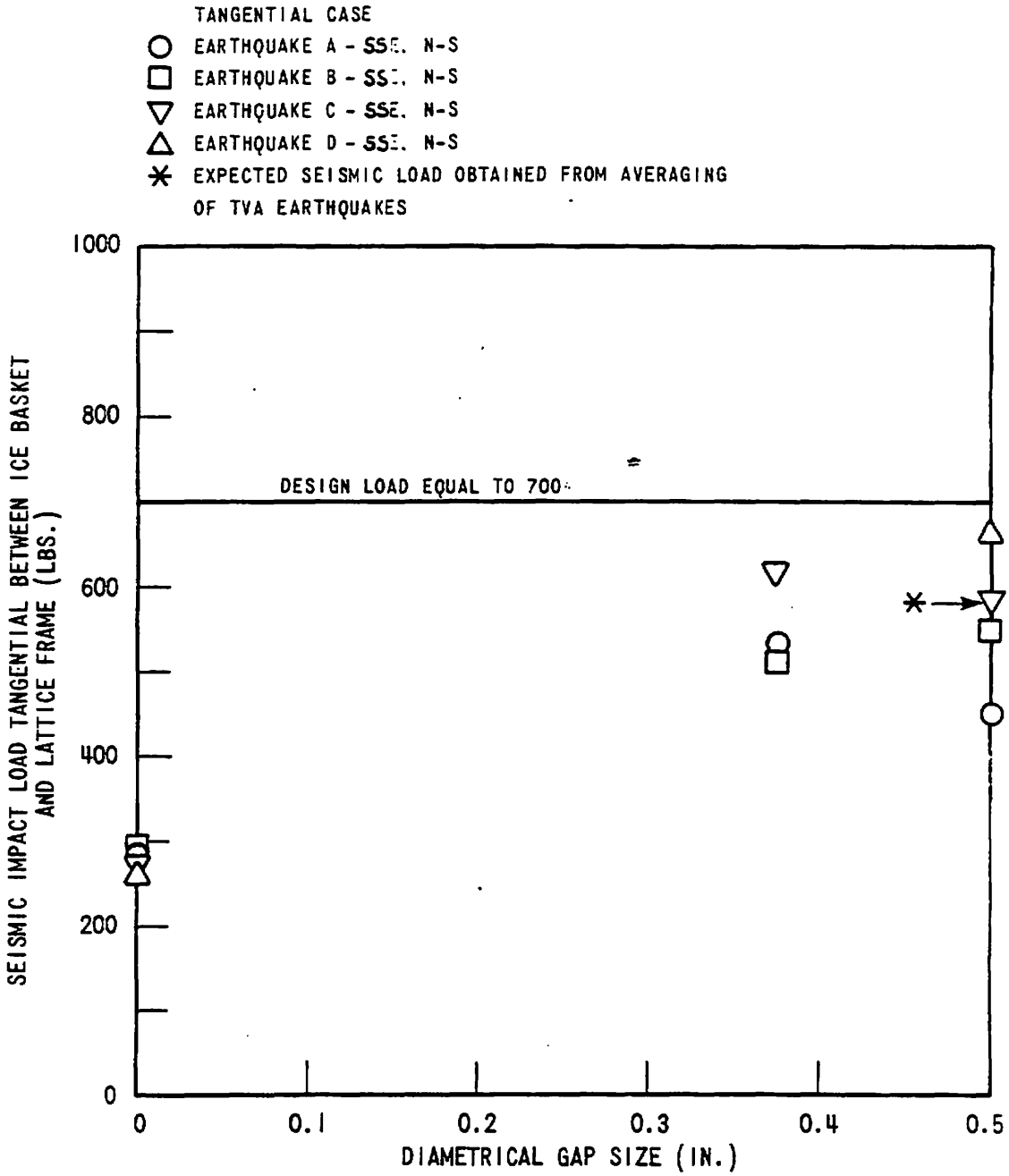

Figure 3.7.2-27 Nonlinear Dynamic Model Results
Seismic Impact Load versus Gap Size

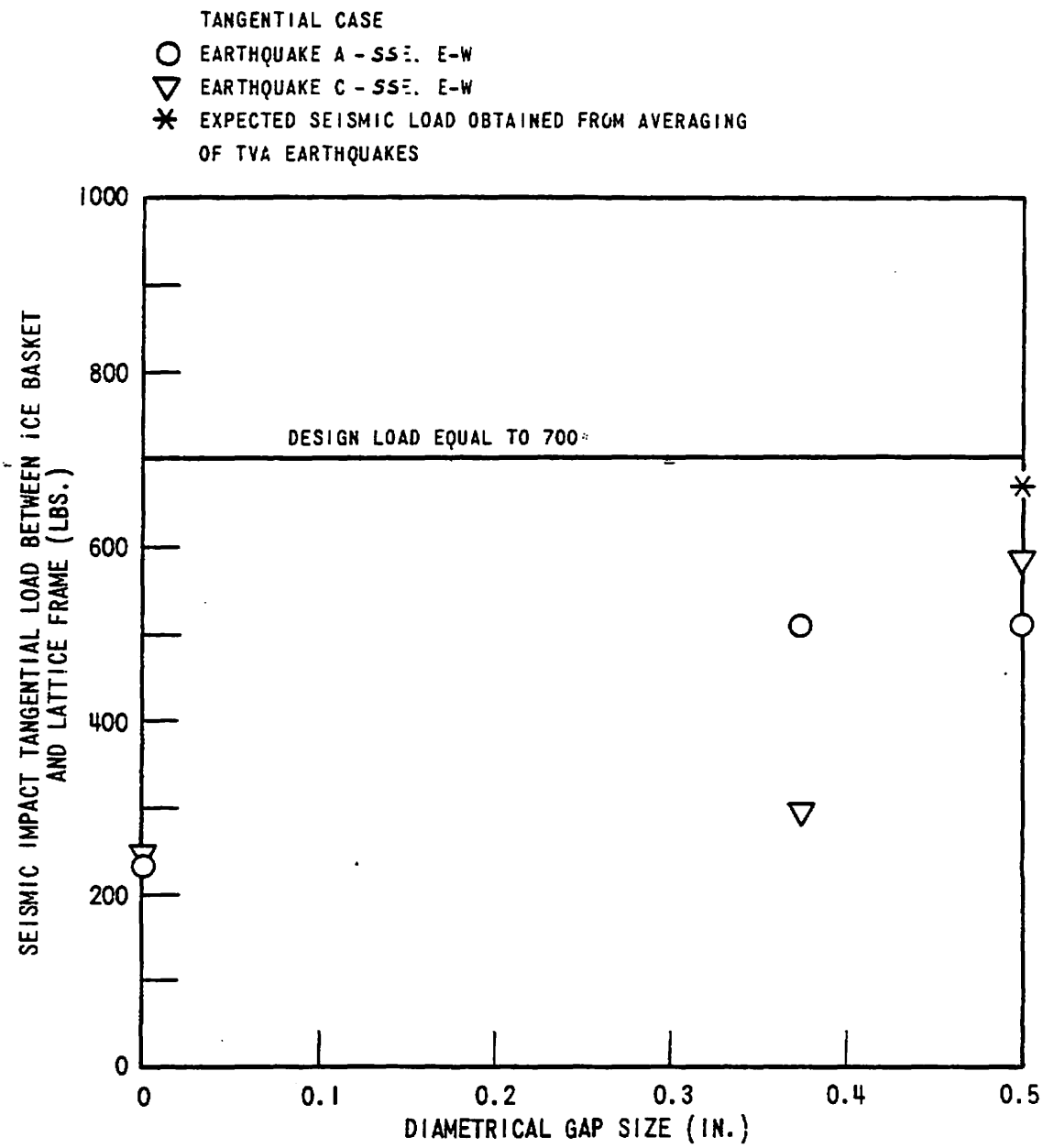

Figure 3.7.2-28 Nonlinear Dynamic Model Results
Seismic Impact Load versus Gap Size

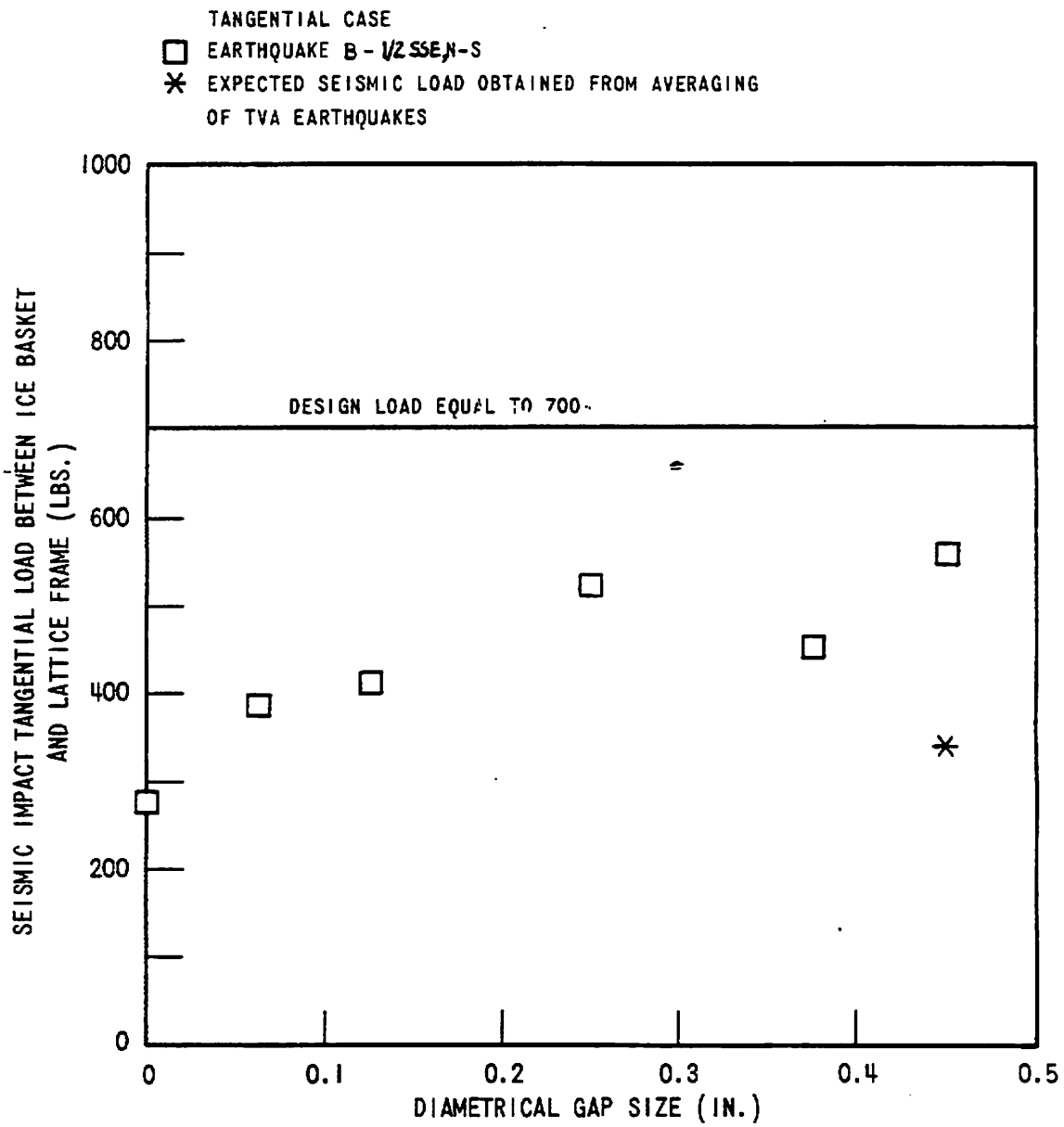

Figure 3.7.2-29 Nonlinear Dynamic Model Results
Seismic Impact Load versus Gap Size

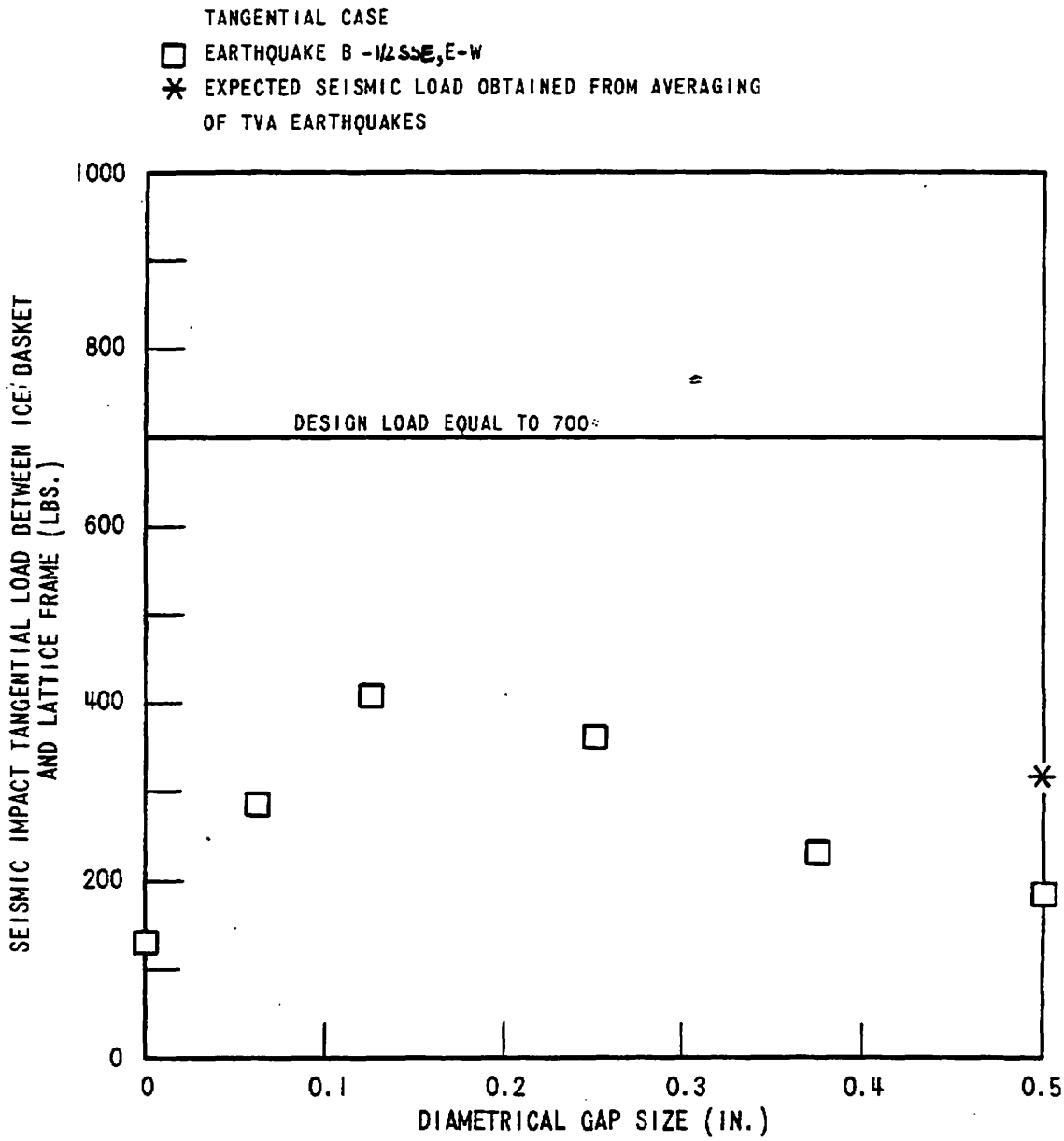

Figure 3.7.2-30 Nonlinear Dynamic Model Results
Seismic Impact Load versus Gap Size

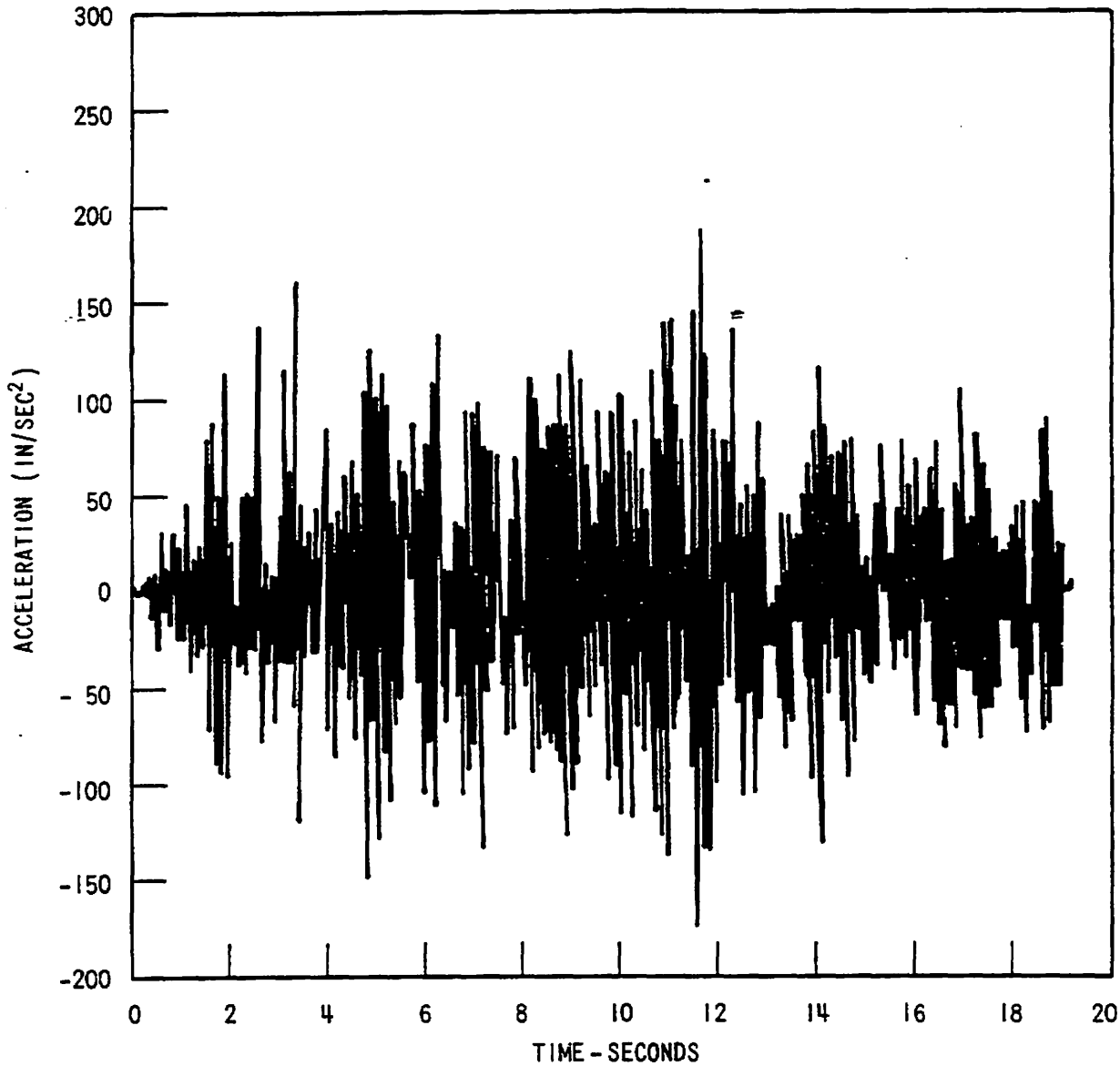

Figure 3.7.2-31 Original Accelerogram

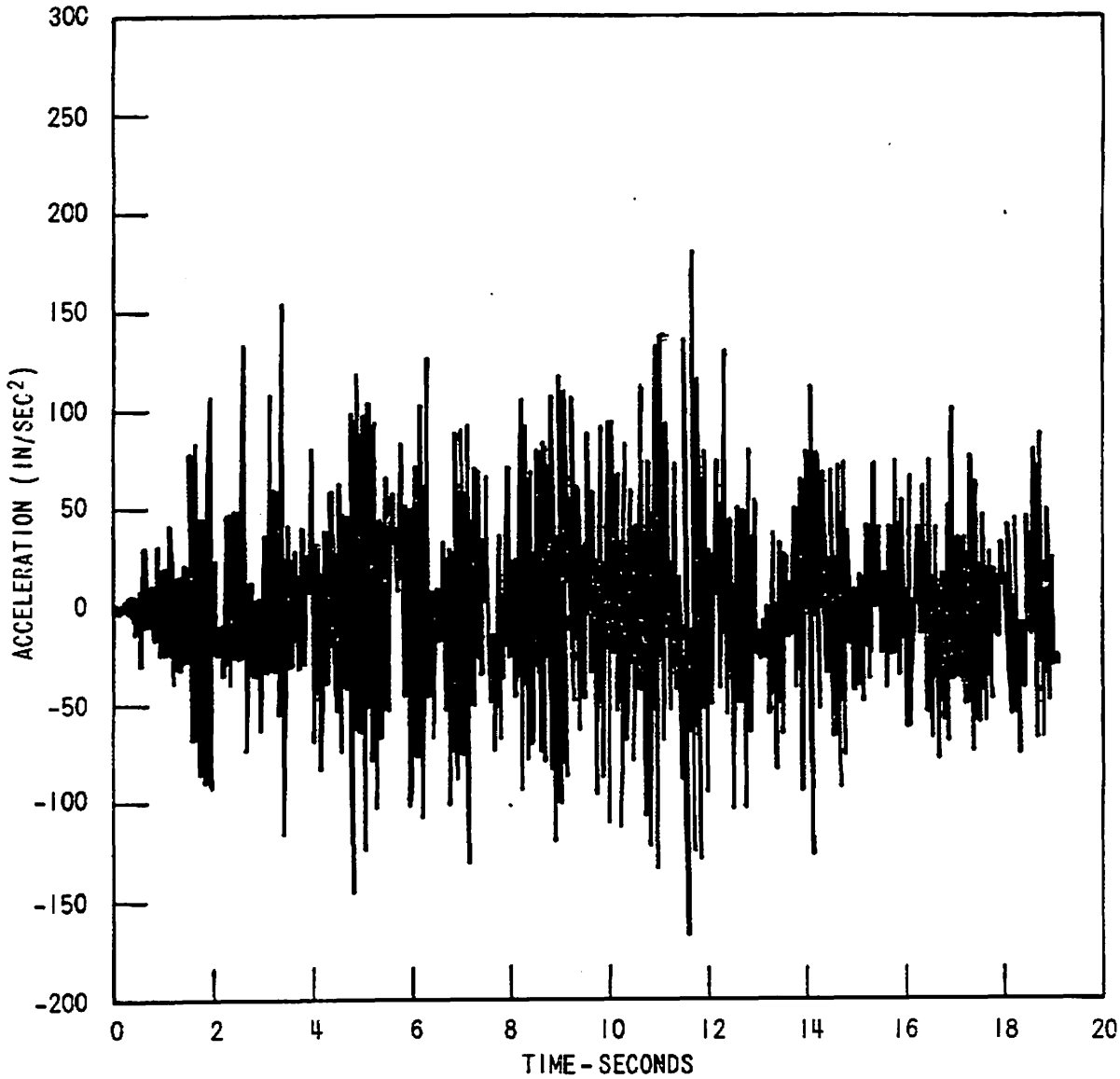

Figure 3.7.2-32 Accelerogram After Integration and Differentiation

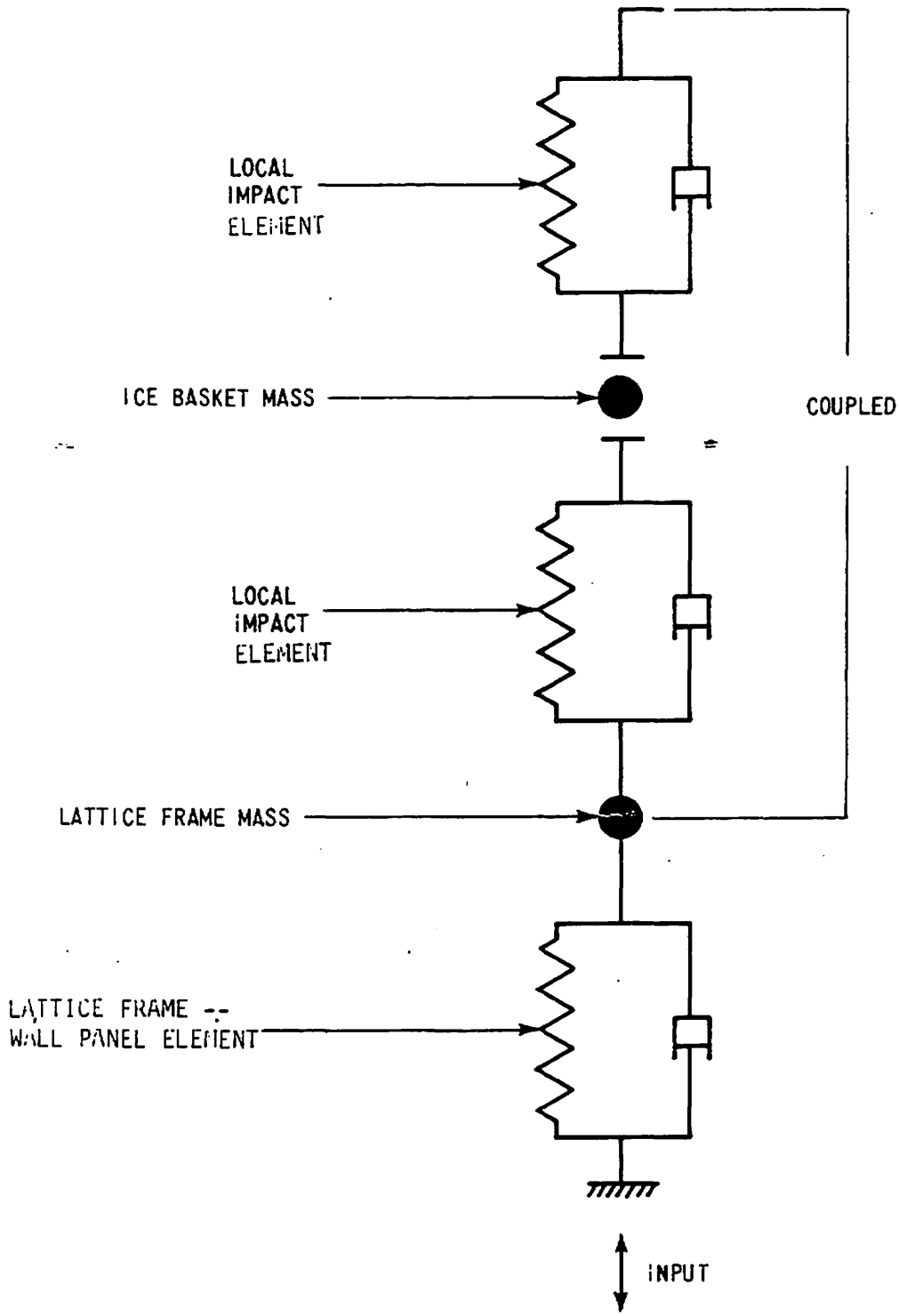

Figure 3.7.2-33 Non Linear Dynamic Model

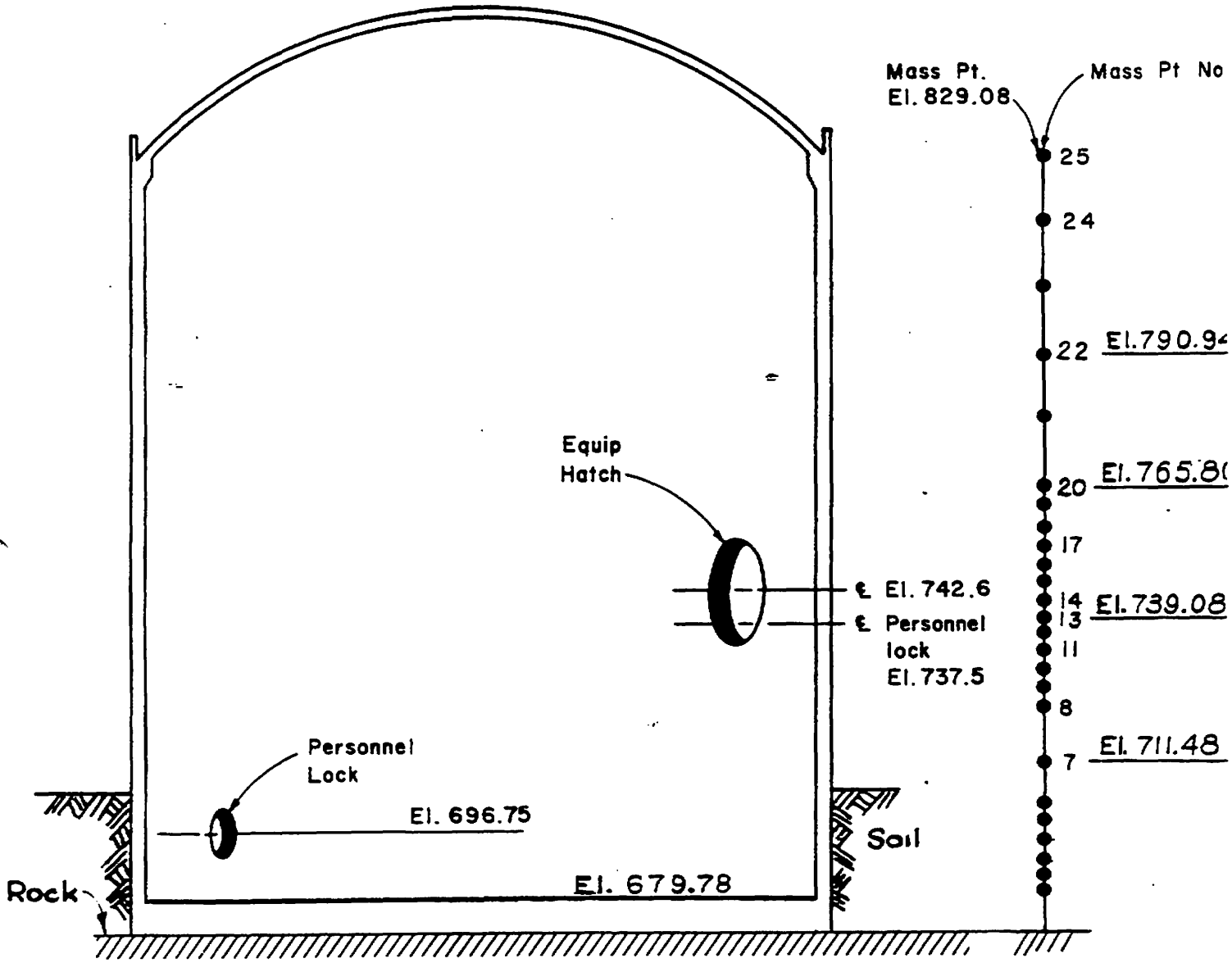

Figure 3.7.2-34 Section through Reactor Shield Building Looking West, Lumped Mass Model for Dynamic Analysis

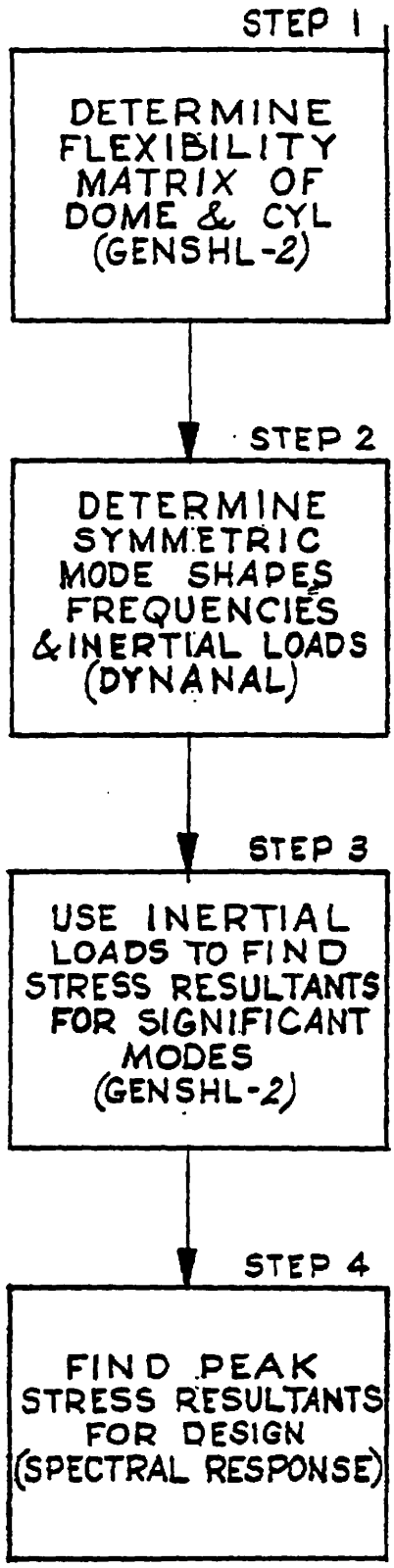

Figure 3.7.2-35 Flowchart of Operations for Response of the Dome

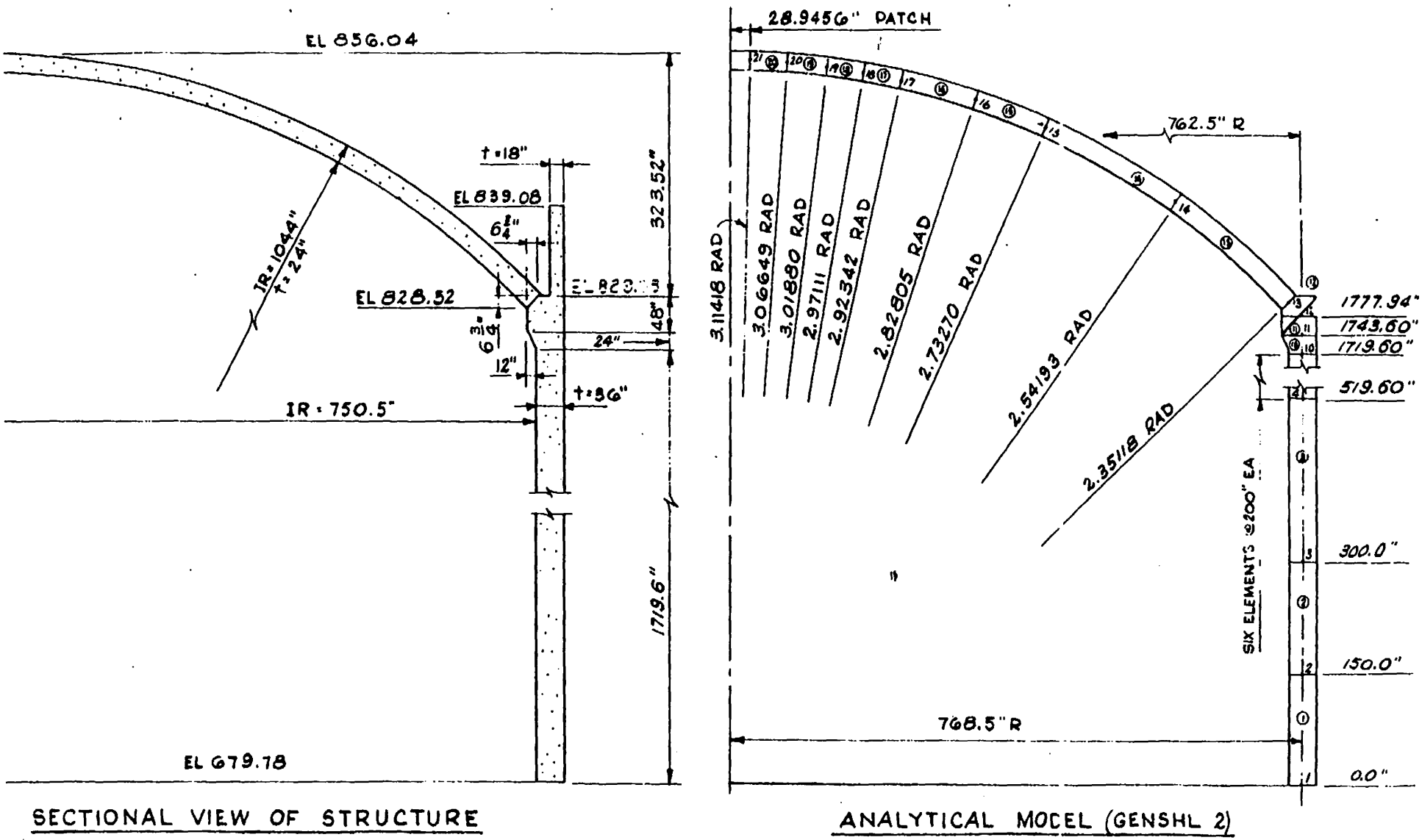

Figure 3.7.2-36 Shell Model for Dome Analysis - Shield Building

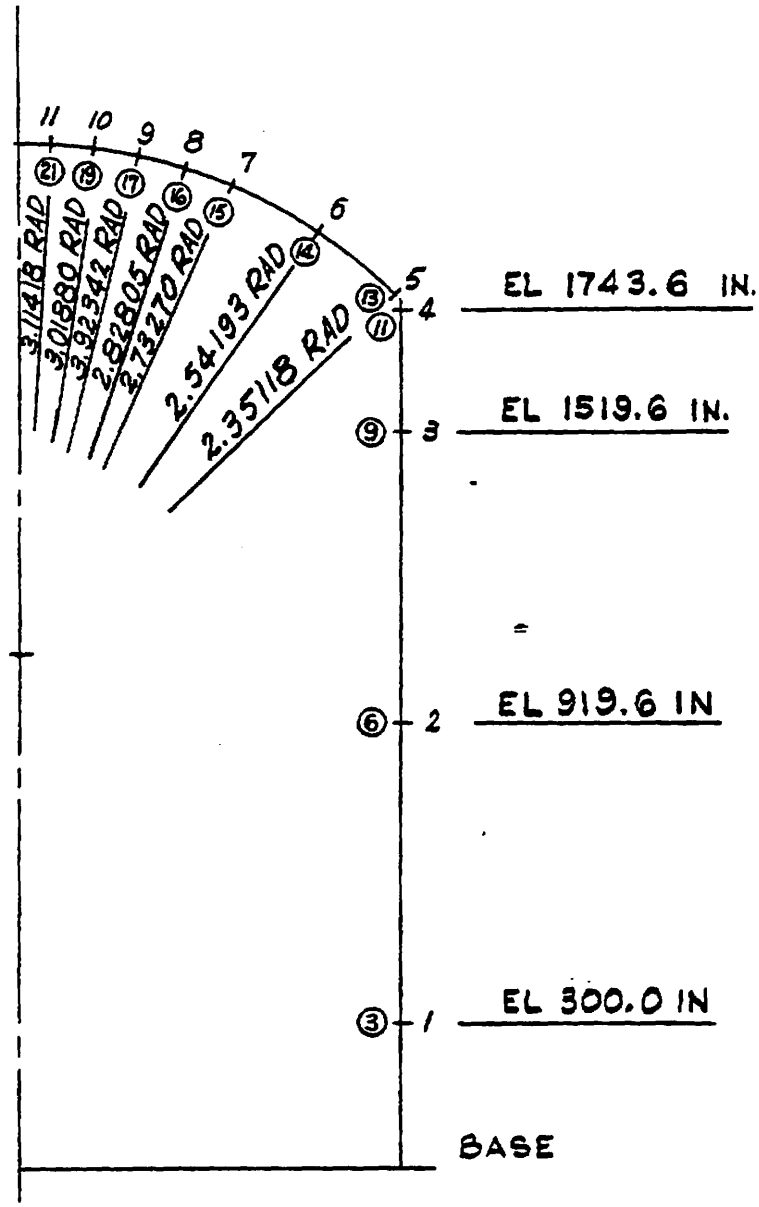

Figure 3.7.2-37 Lumped Mass Model for Dome Analysis - Shield Building

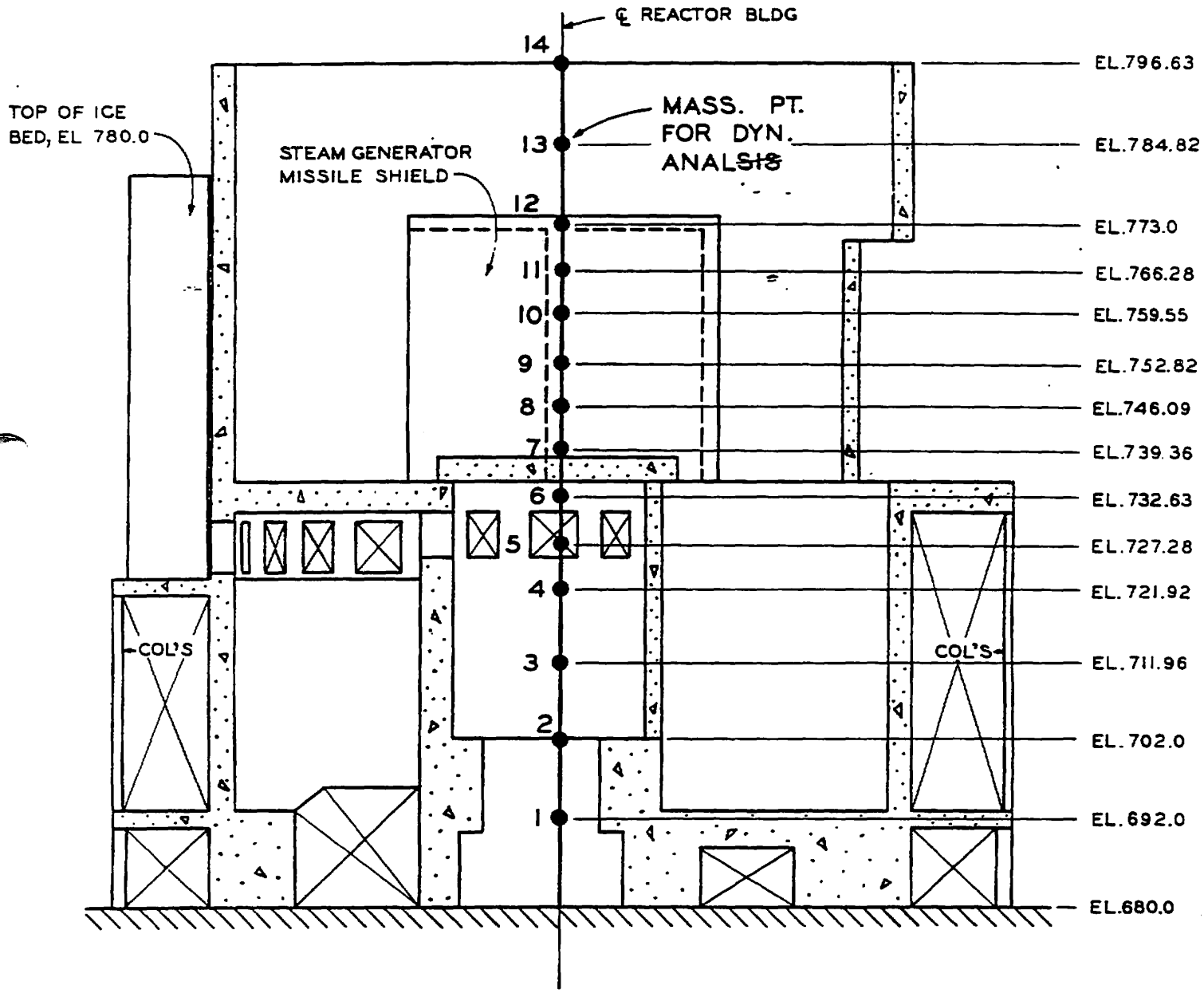

Figure 3.7.2-38 Reactor Building, Interior Concrete Structure Sectional Elevation Looking West, Lumped Mass Model for Dynamic Analysis

Best Available Historical Image

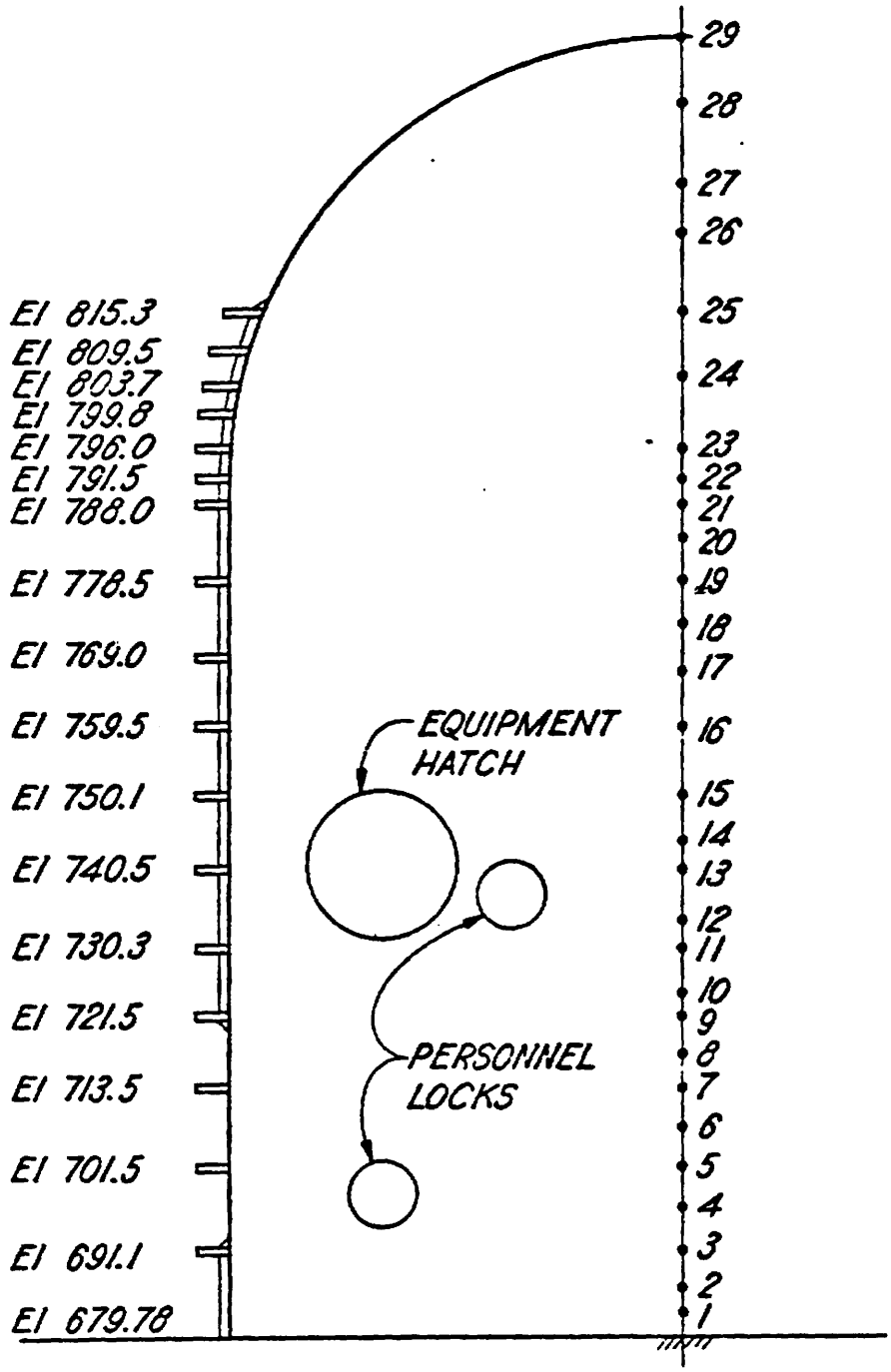

Figure 3.7.2-39 Steel Containment Vessel, Lumped Mass Model for Dynamic Analysis

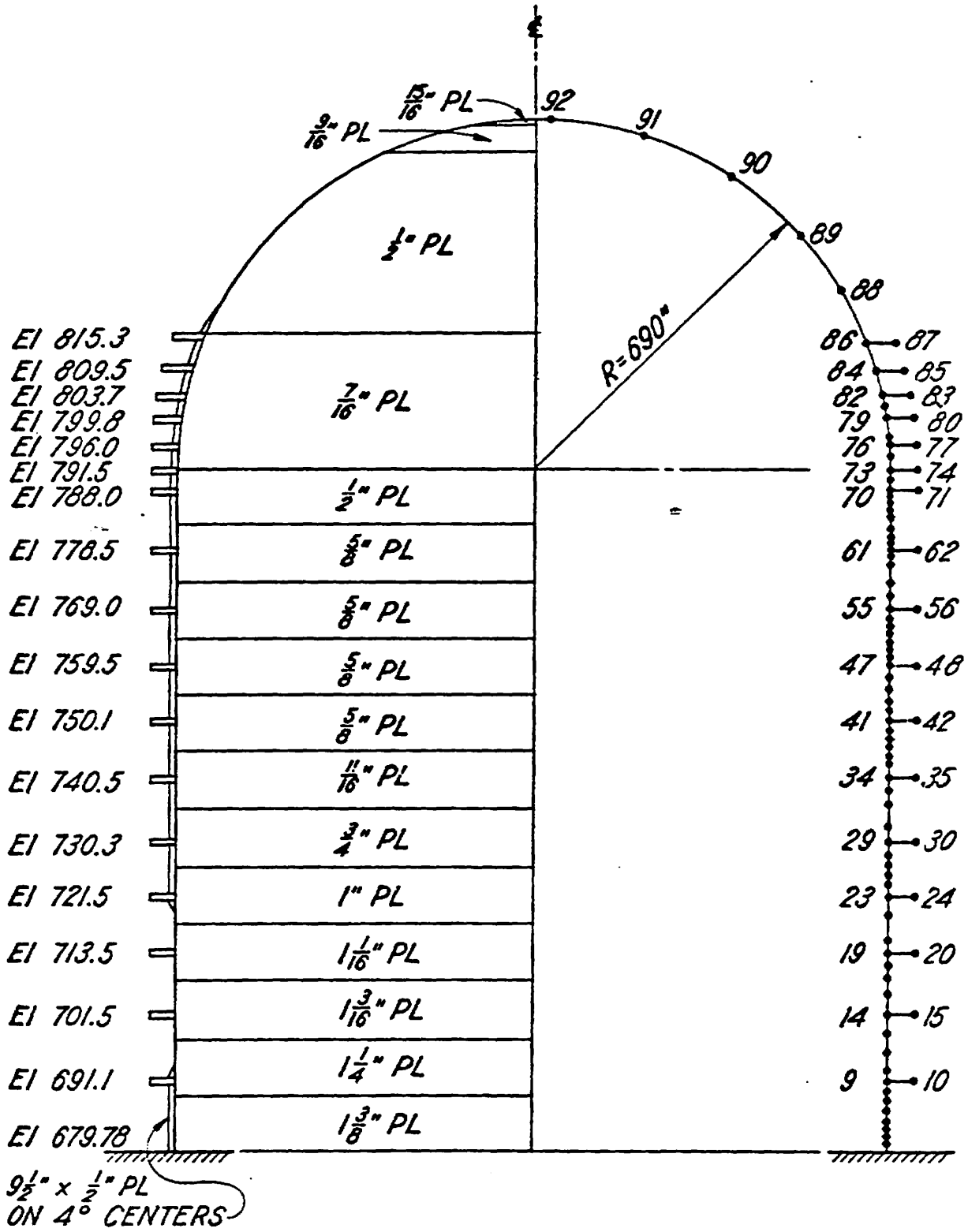

Figure 3.7.2-40 Steel Containment Vessel, Finite Element Model

Best Available Historical Image

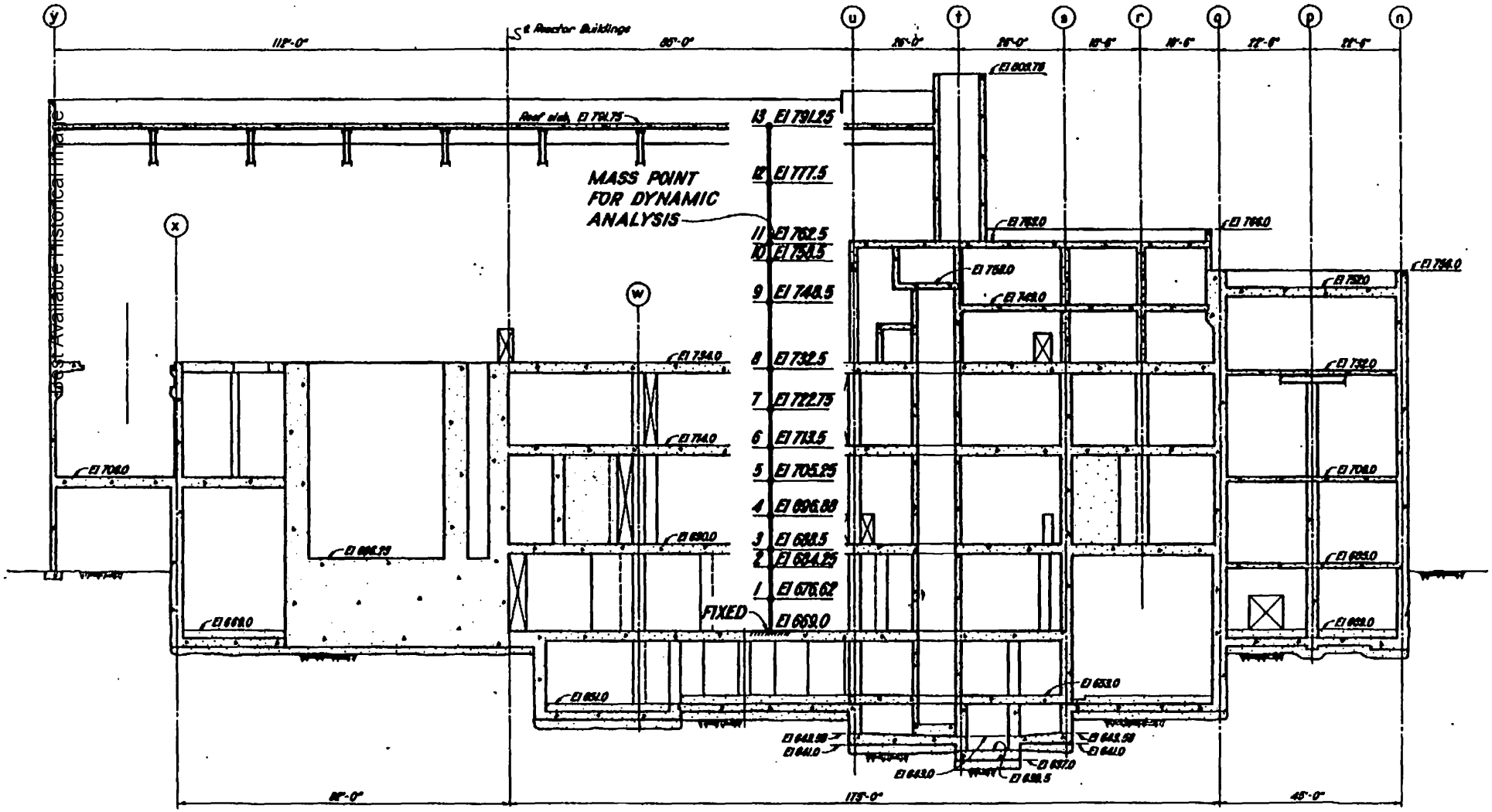

Figure 3.7.2-41 Sectional Elevation of Auxiliary Control Building Lumped Mass Model for Dynamic Analysis

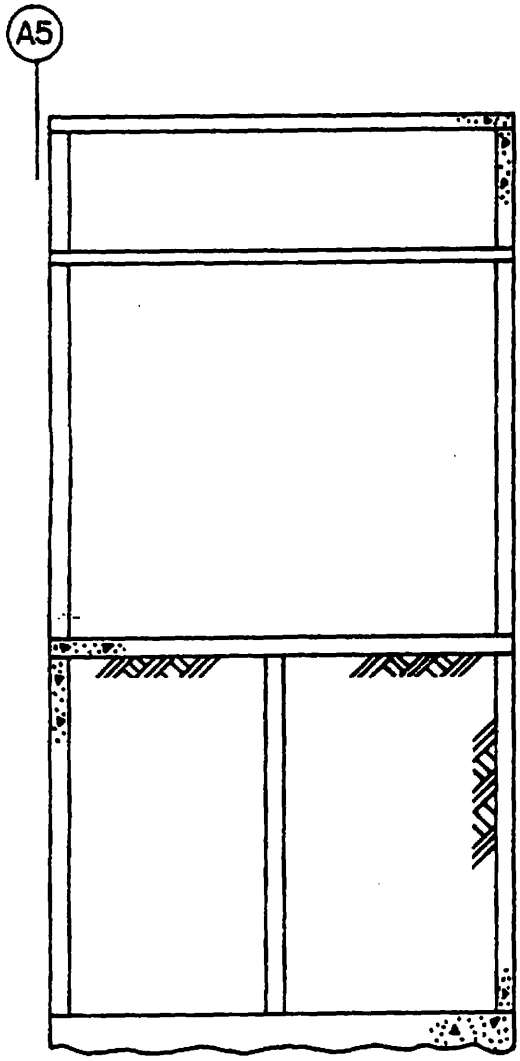

SECTIONAL ELEVATION

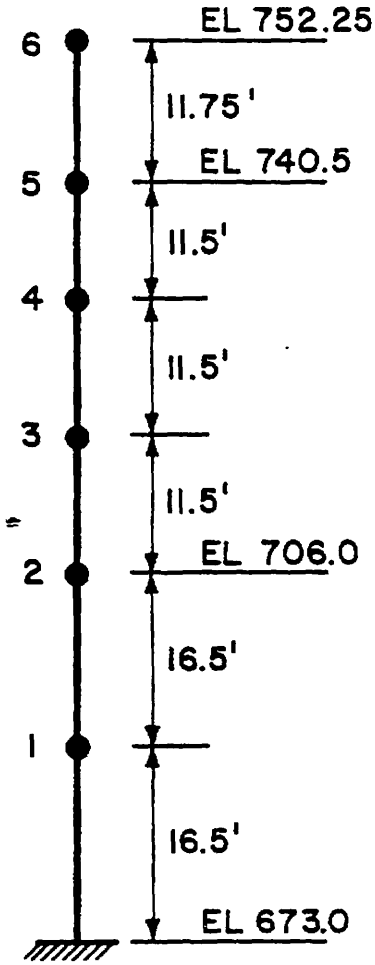

LUMPED MASS MODEL

Additional Equipment Building - Unit 1
Figure 3.7.2-42

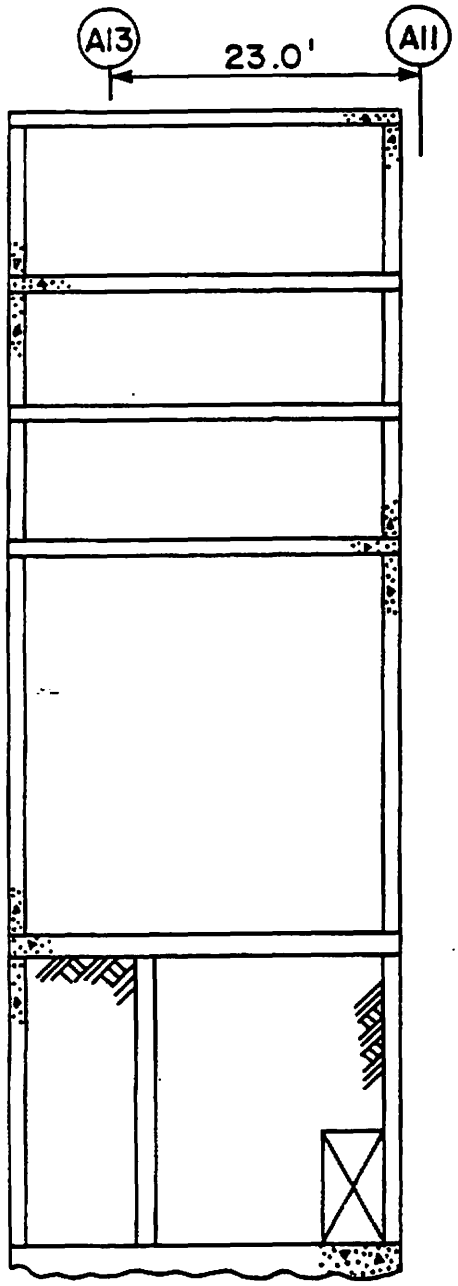

SECTIONAL ELEVATION

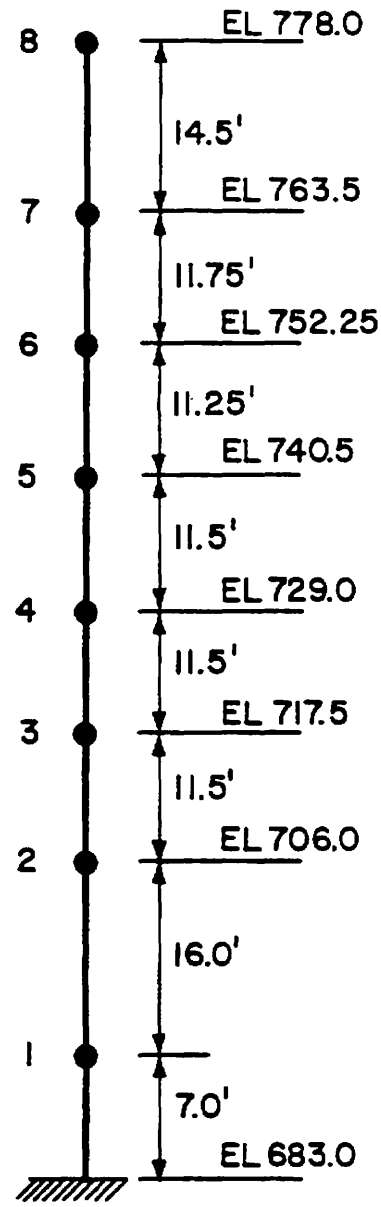

LUMPED MASS MODEL

Additional Equipment Building - Unit 2
Figure 3.7.2-43

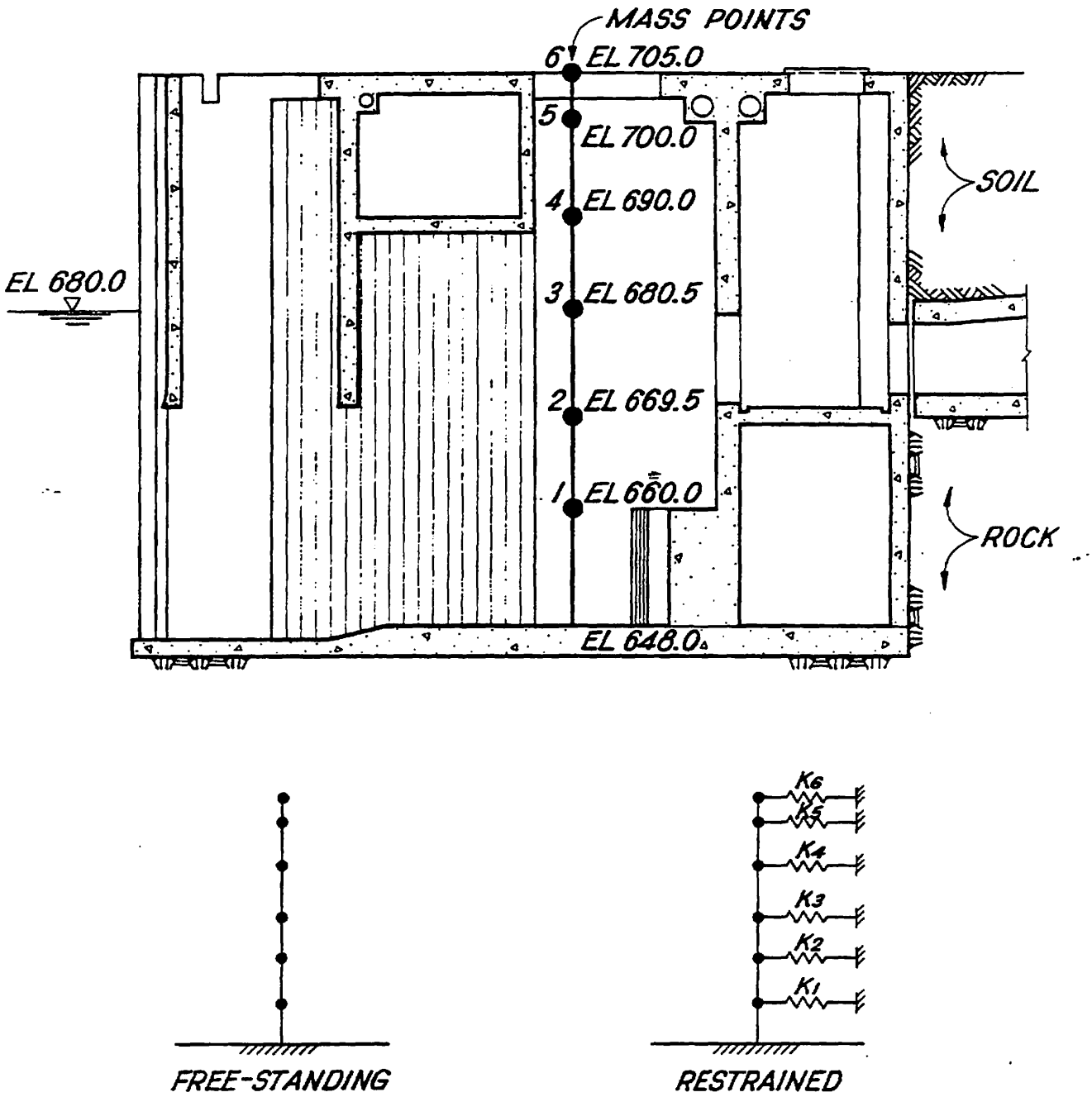

Figure 3.7.2-44 Sectional Elevation of Intake Pumping Station, Lumped Mass Model for Dynamic Analysis

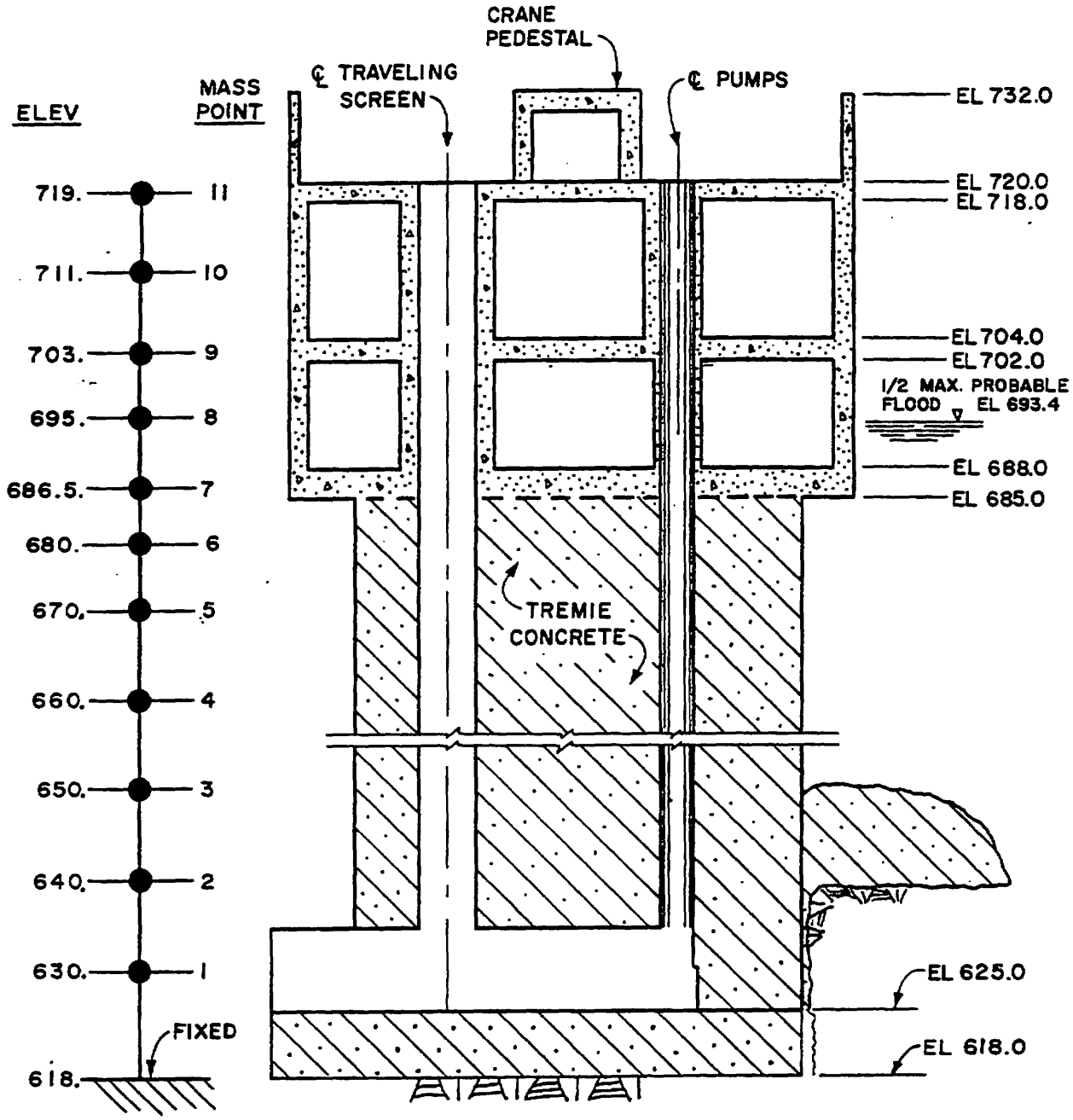

ERCW PUMPING STATION
MODEL FOR DYNAMIC ANALYSIS
SECTIONAL ELEVATION

Figure 3.7.2-45

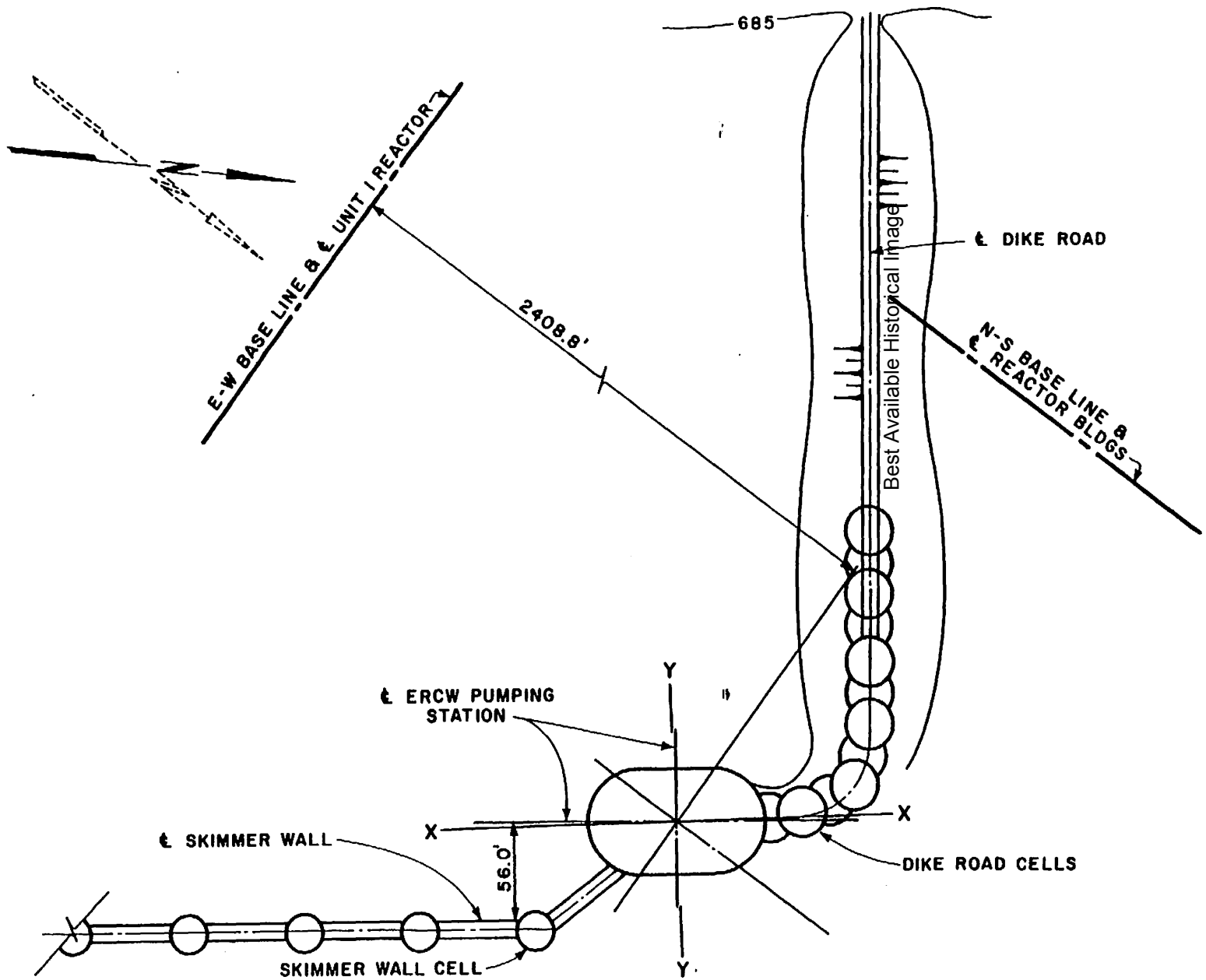

Best Available Historical Image

ERCW Pumping Station
Key Plan

Figure 3.7.2-46

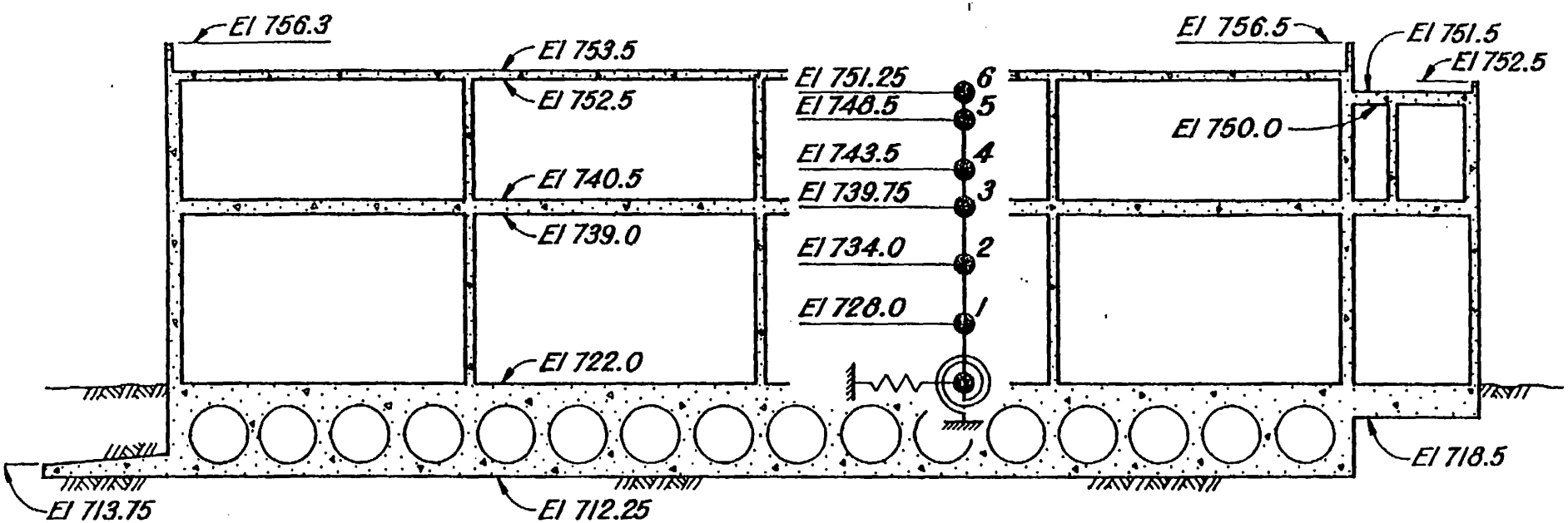

Figure 3.7.2-47 Sectional Elevation of Diesel Generation Building, Lumped Mass Model for Dynamic Analysis

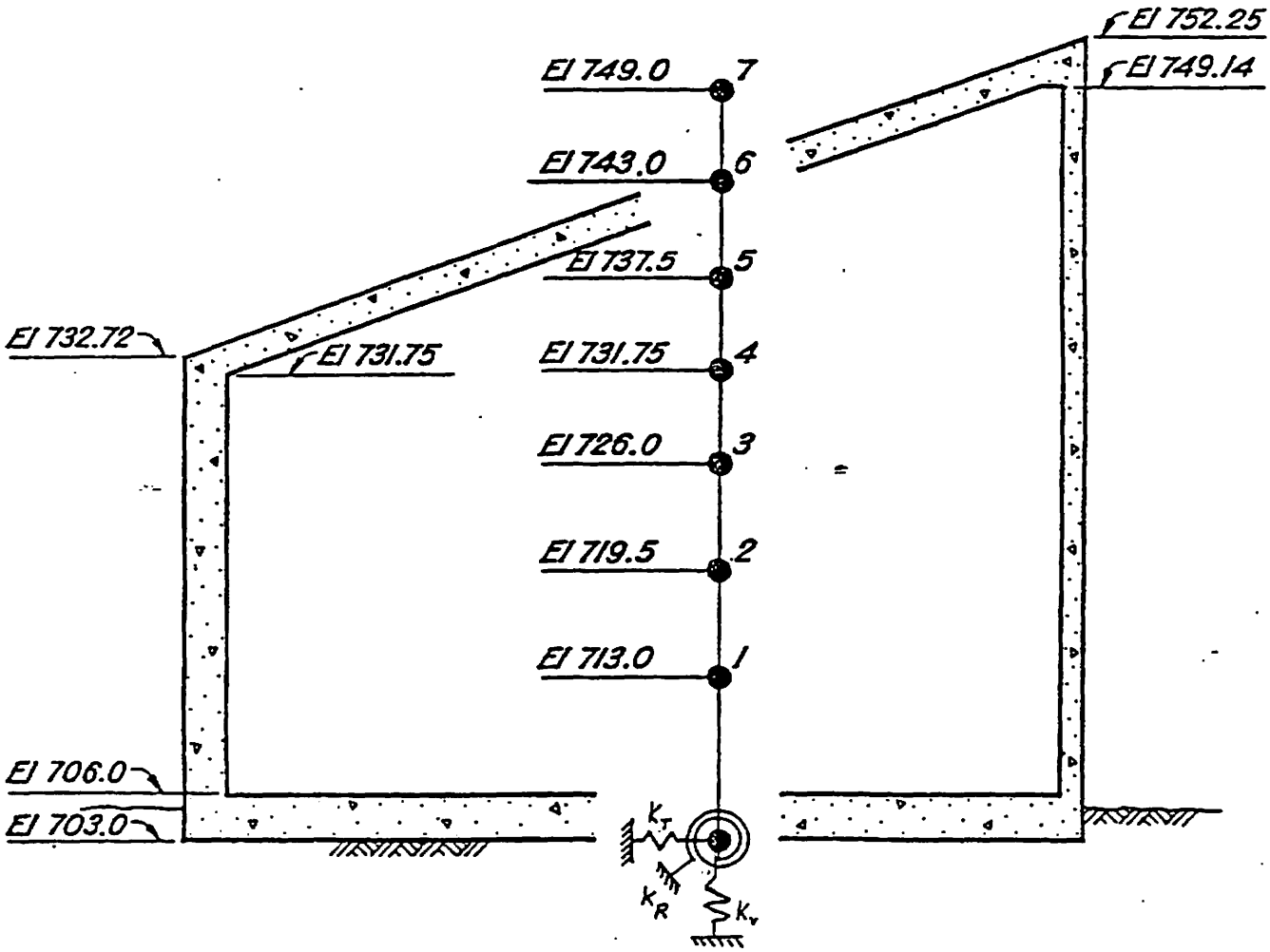

Figure 3.7.2-48 Sectional Elevation of Waste Packaging Area, Lumped Mass Model for Dynamic Analysis

REVISED BY AMENDMENT 6.

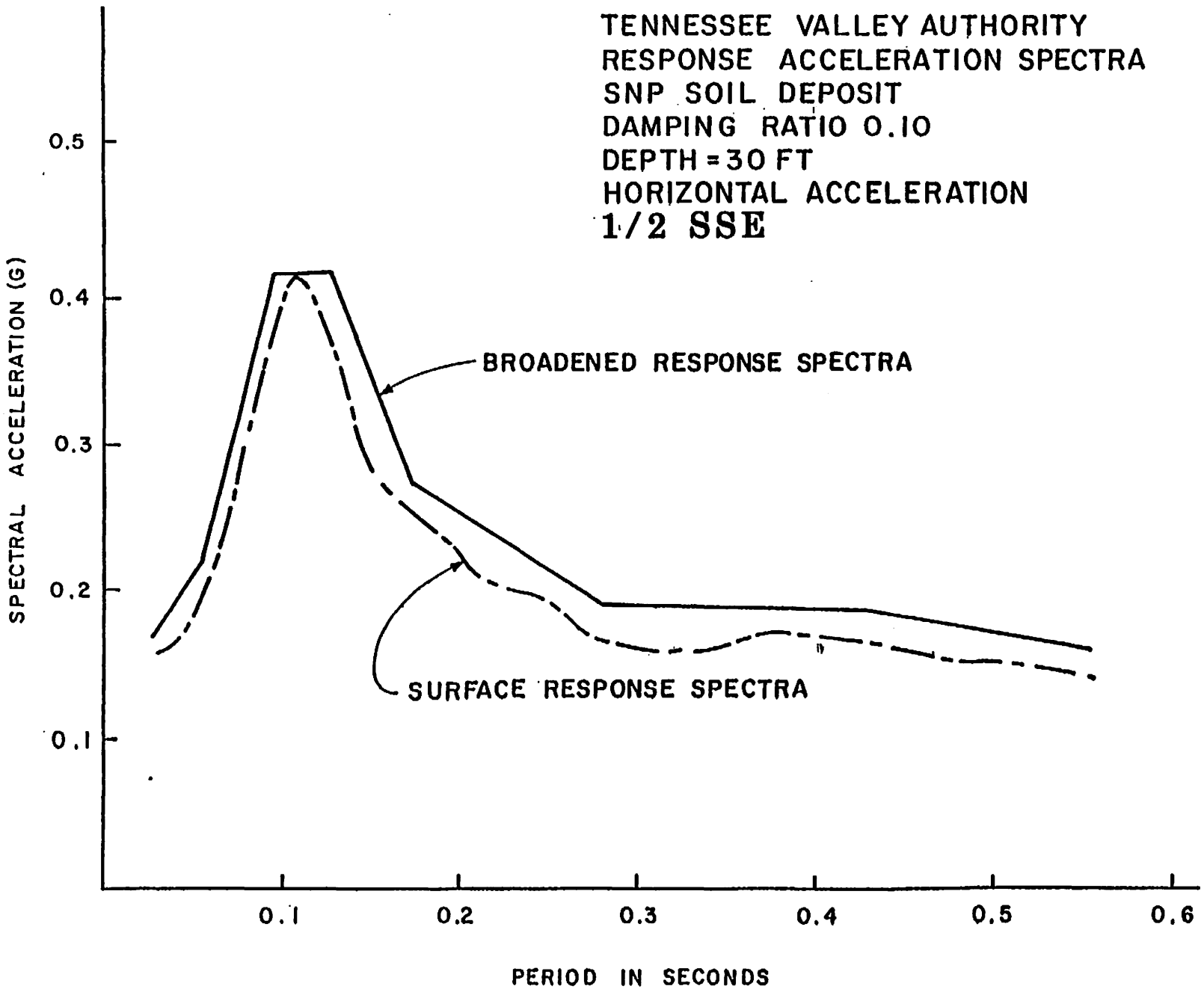

Figure 3.7.2-49

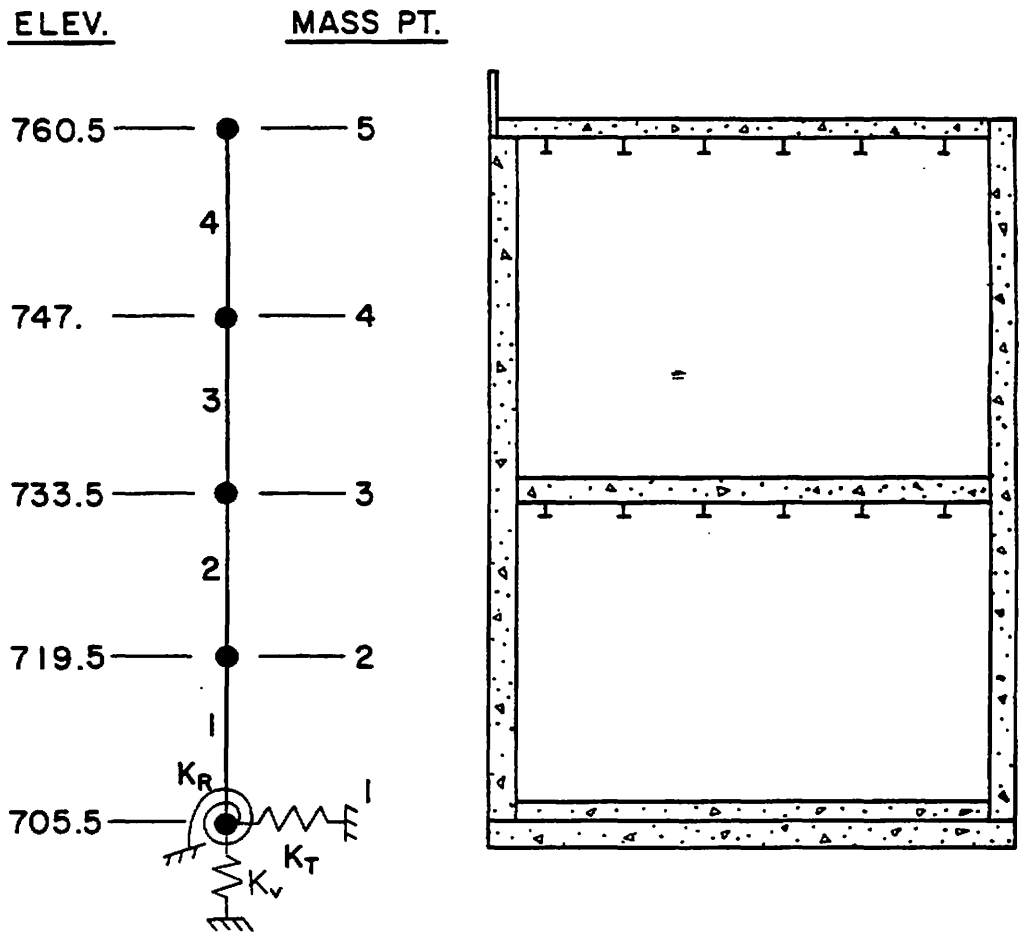

CONDENSATE DEMINERALIZER WASTE EVAPORATOR BUILDING
MATHEMATICAL MODEL FOR DYNAMIC ANALYSIS

Figure 3.7.2-50

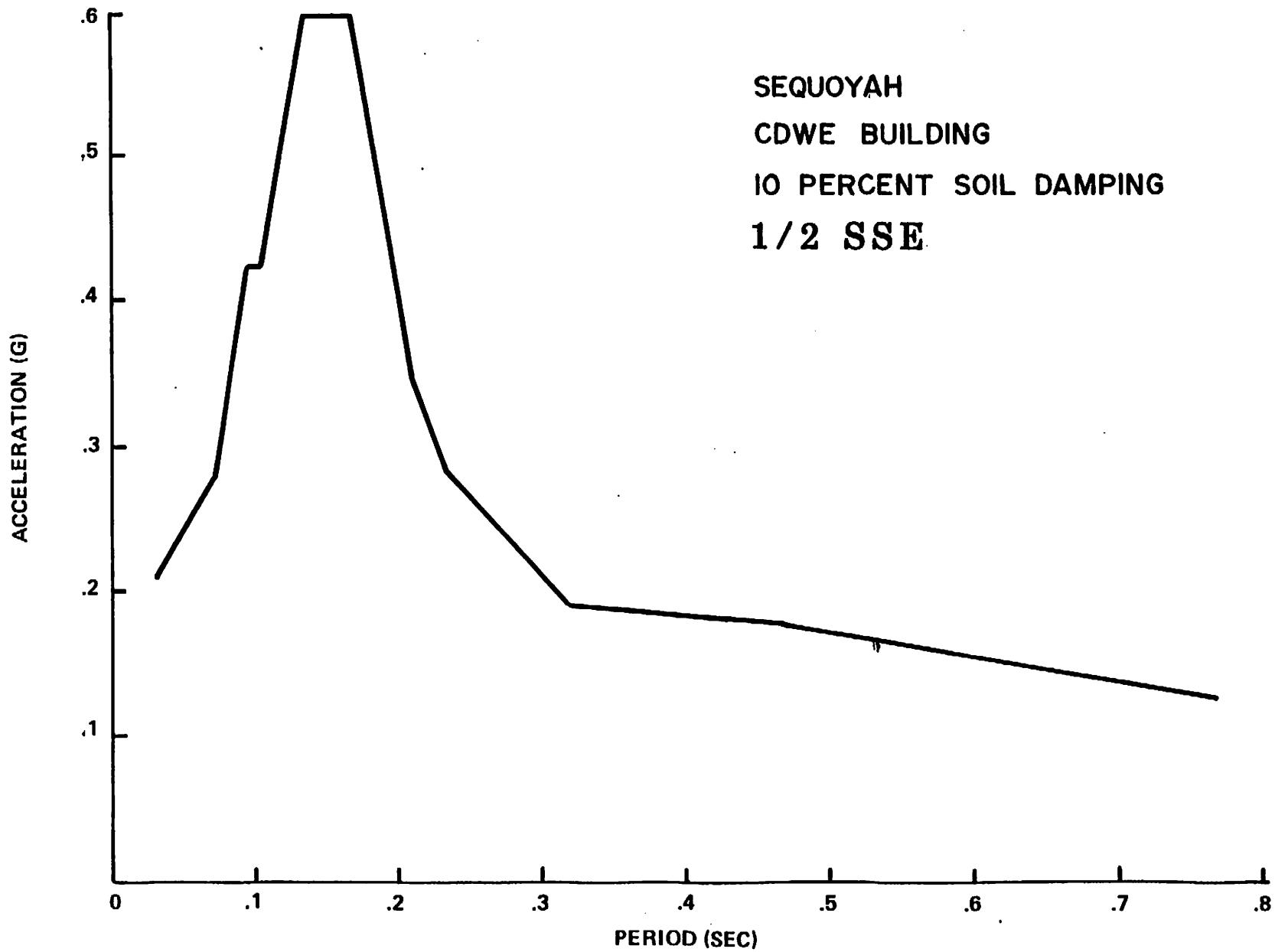

AVERAGED GROUND RESPONSE SPECTRUM

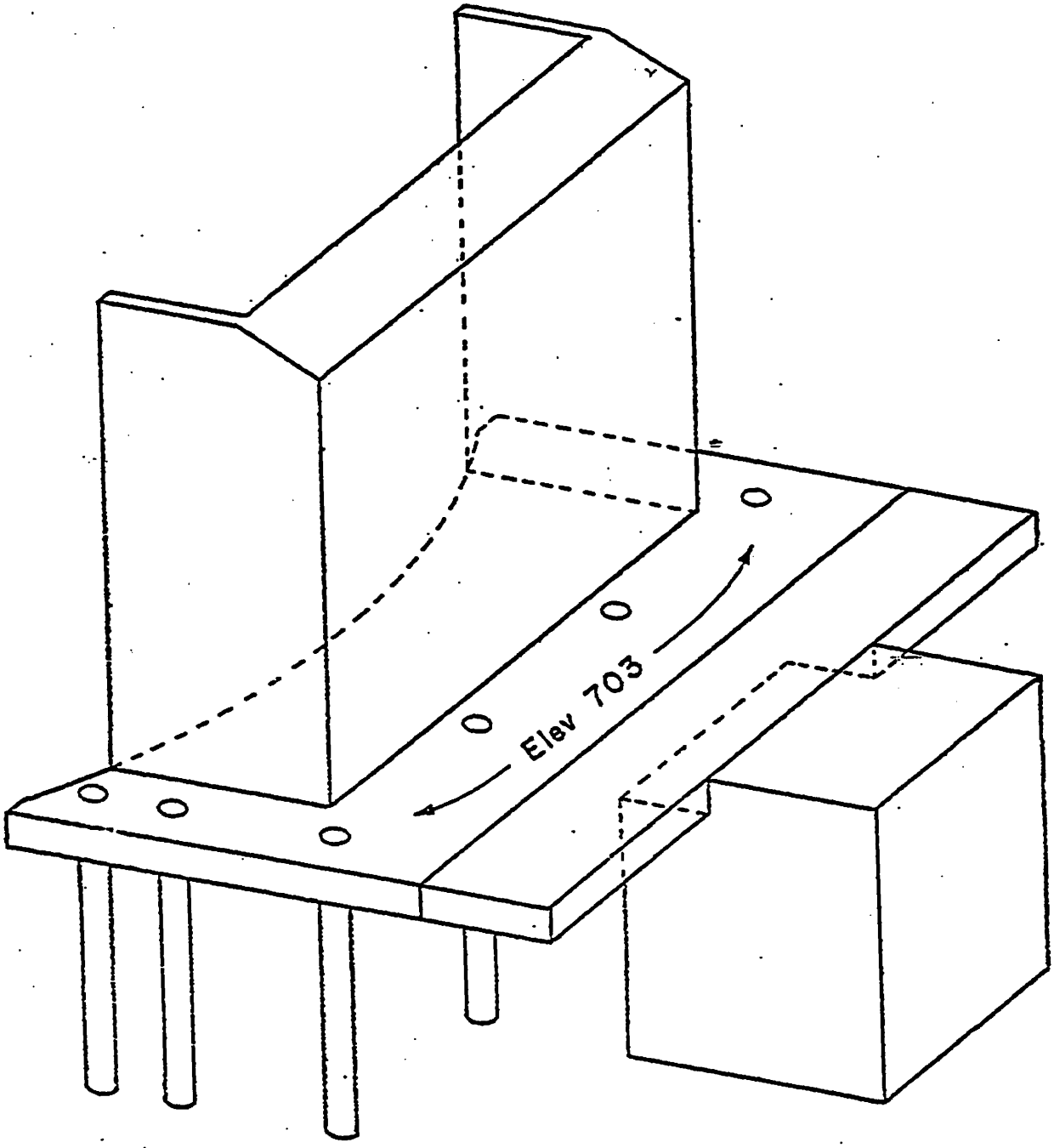

SEQUOYAH NUCLEAR PLANT
FINAL SAFETY
ANALYSIS REPORT

CONCRETE CAISSON

Figure 3.7.2-52

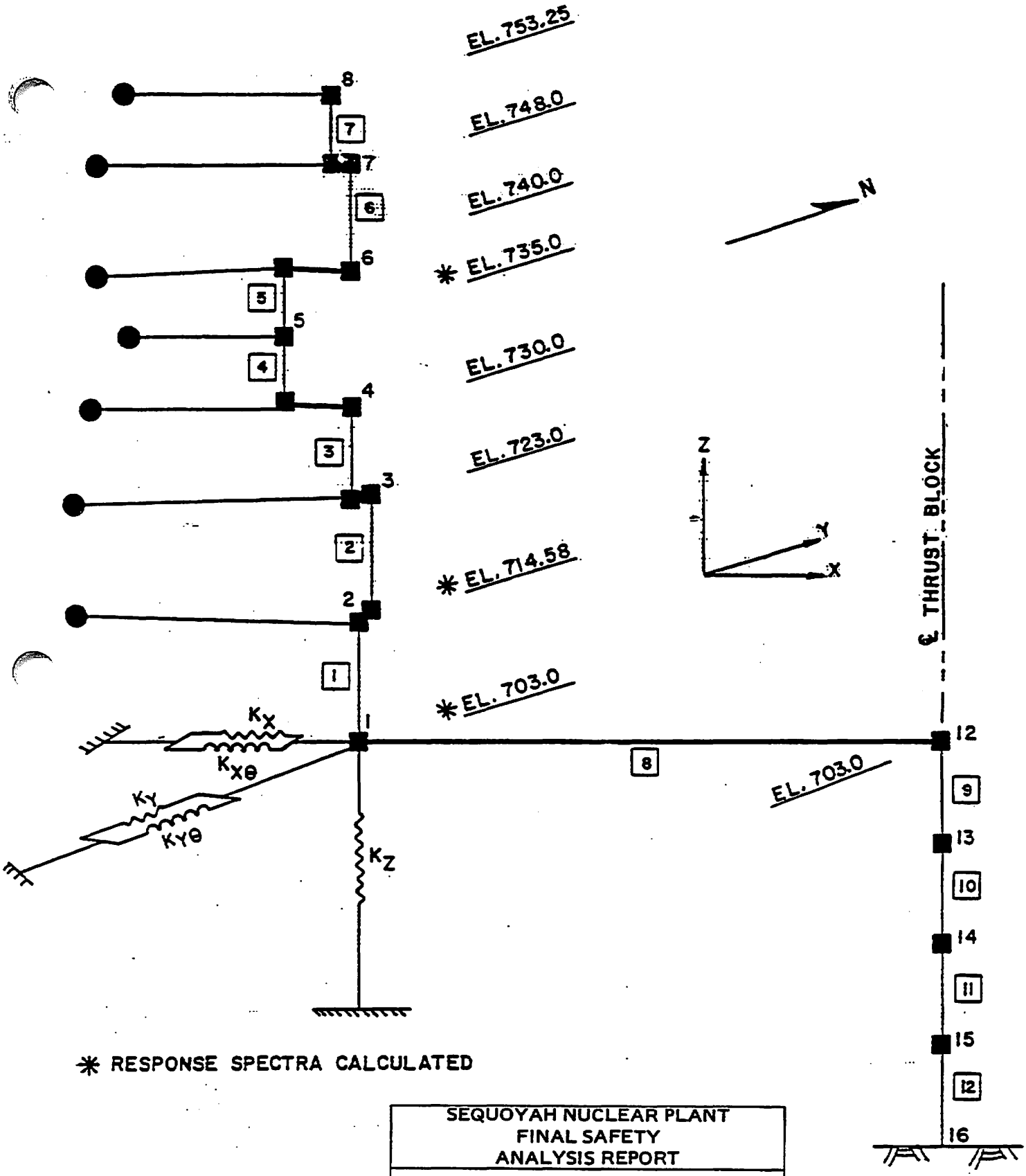

* RESPONSE SPECTRA CALCULATED

SEQUOYAH NUCLEAR PLANT
FINAL SAFETY
ANALYSIS REPORT

EAST VALVE ROOM-LUMPED MASS
AND SPRING MODEL

Figure 3.7.2-53

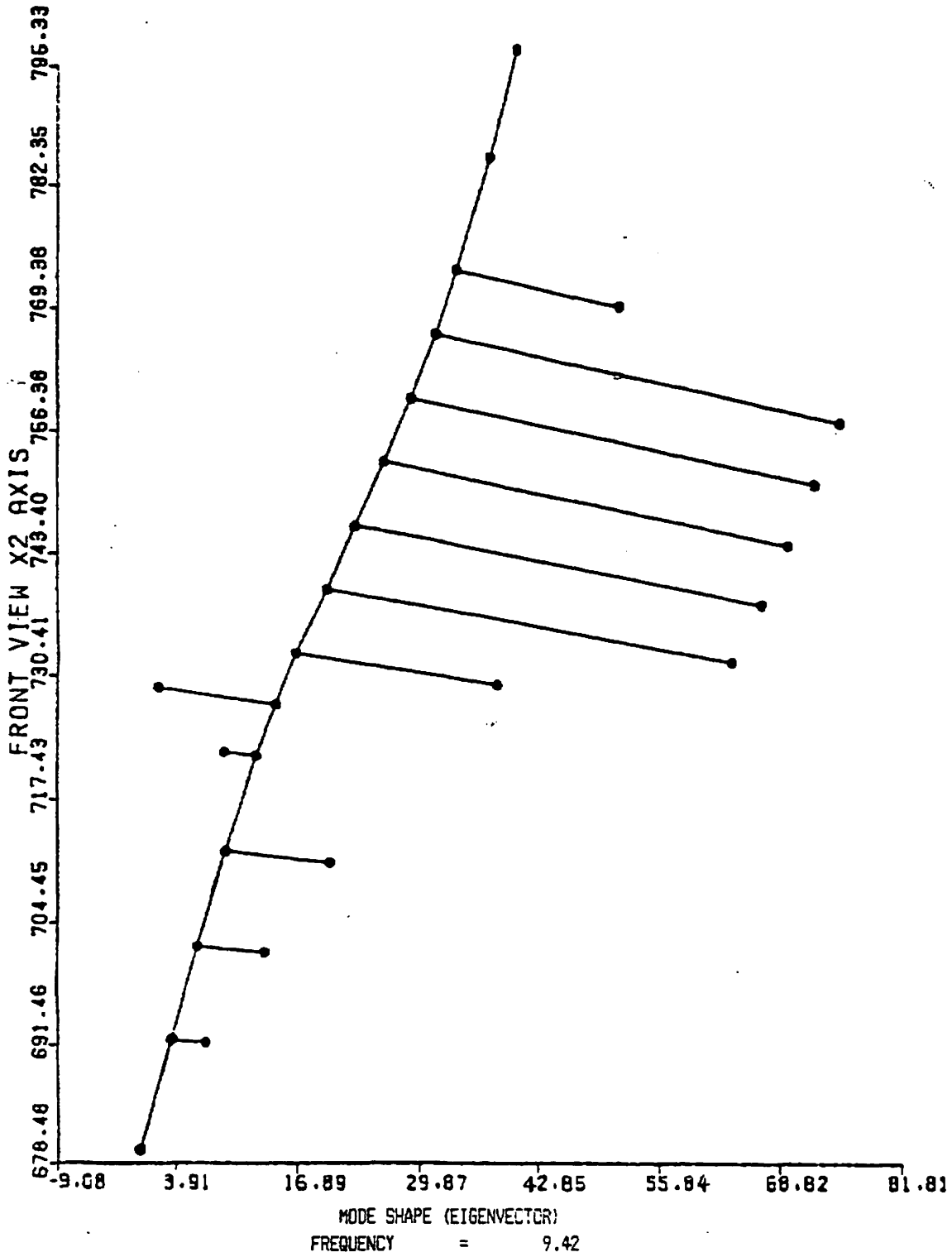

Figure 3.7.2-54 Interior Concrete Structure N-S Translational Motion, Translational Mode 1

REVISED BY AMENDMENT 6.

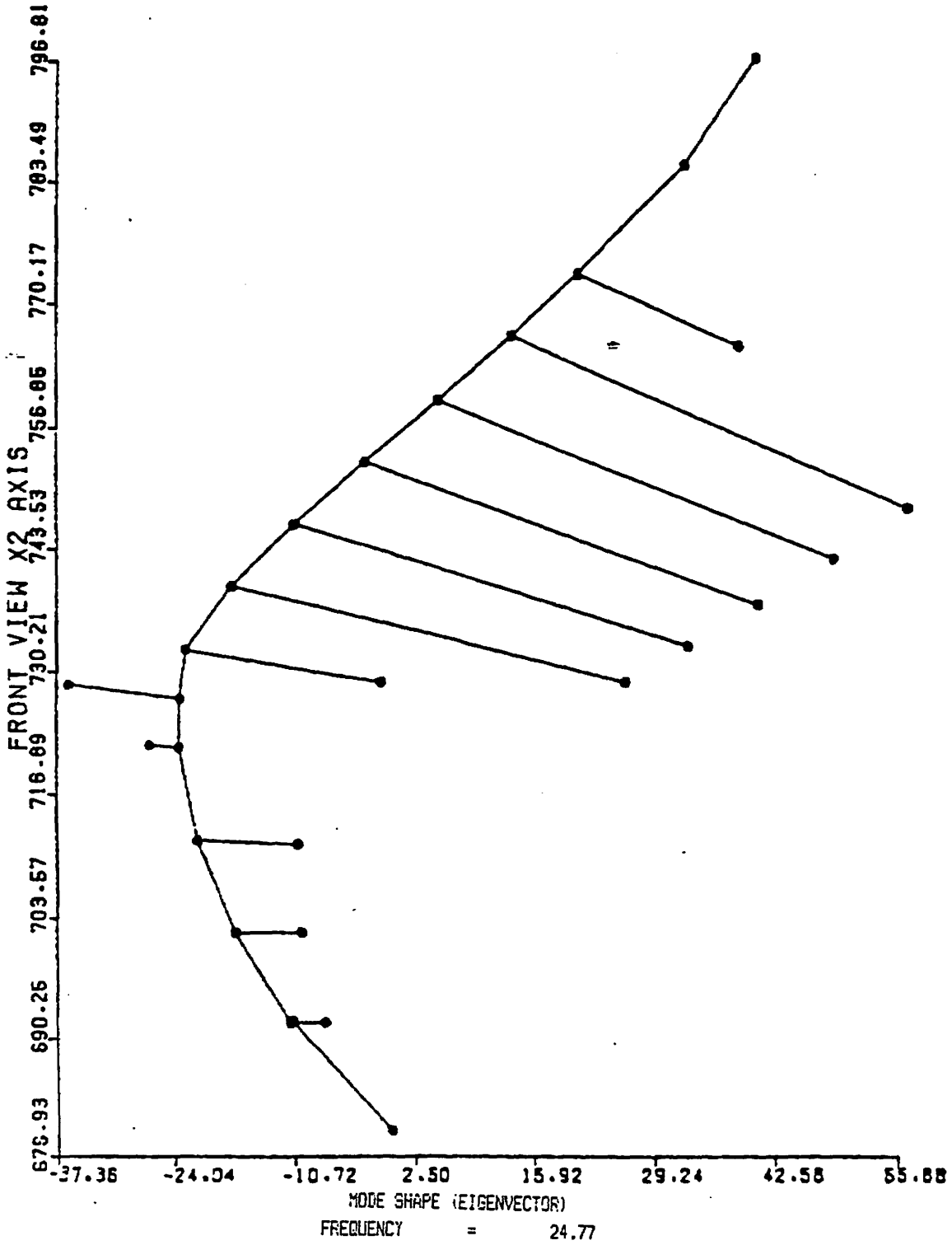

Figure 3.7.2-55 Interior Concrete Structure N-S Translational Motion, Translational Mode 2

REVISED BY AMENDMENT 6.

Figure 3.7.2-56 deleted by Amendment 6

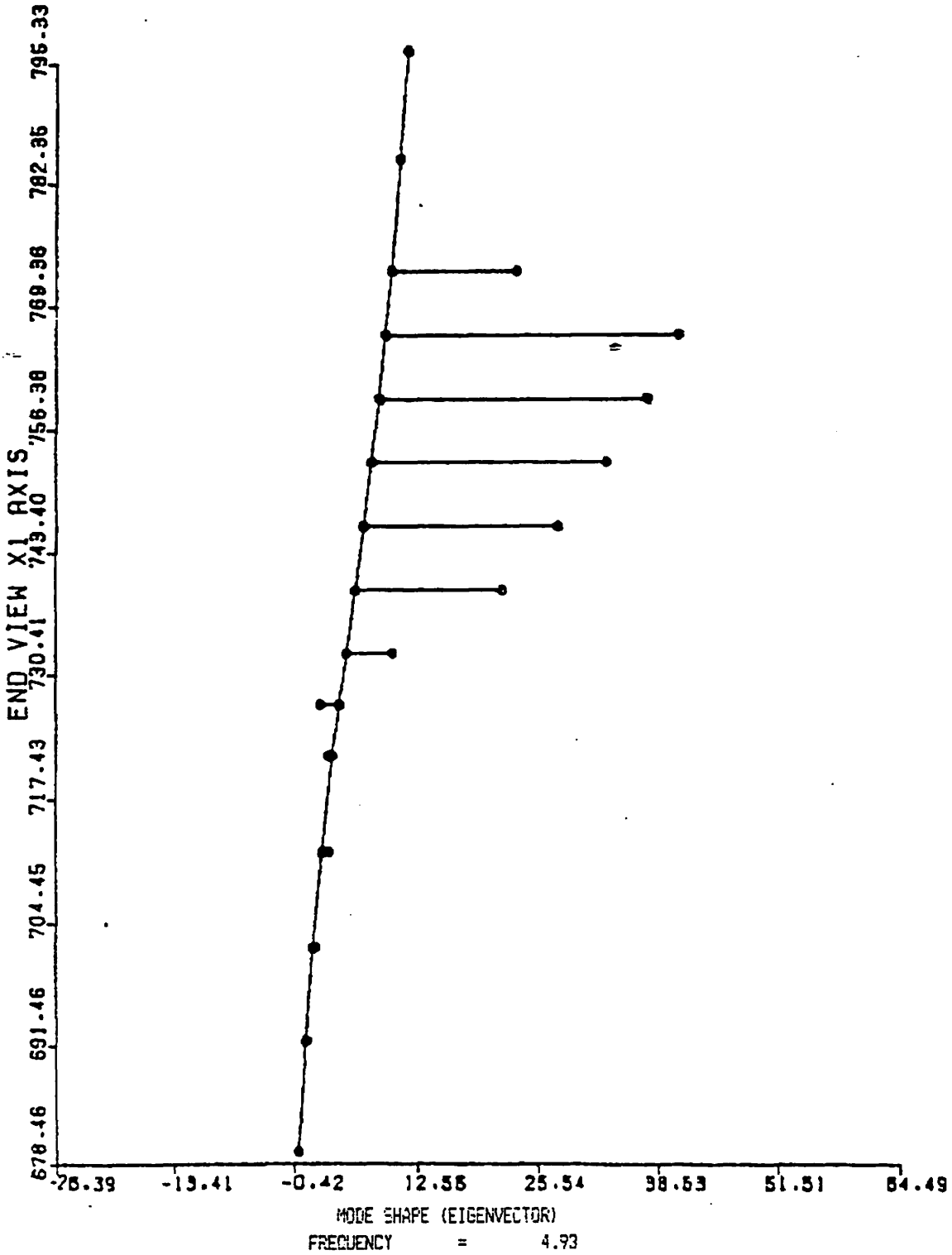

Figure 3.7.2-57 Interior Concrete Structure E-W Translational Plus Torsion, Translational Mode 1

REVISED BY AMENDMENT 6.

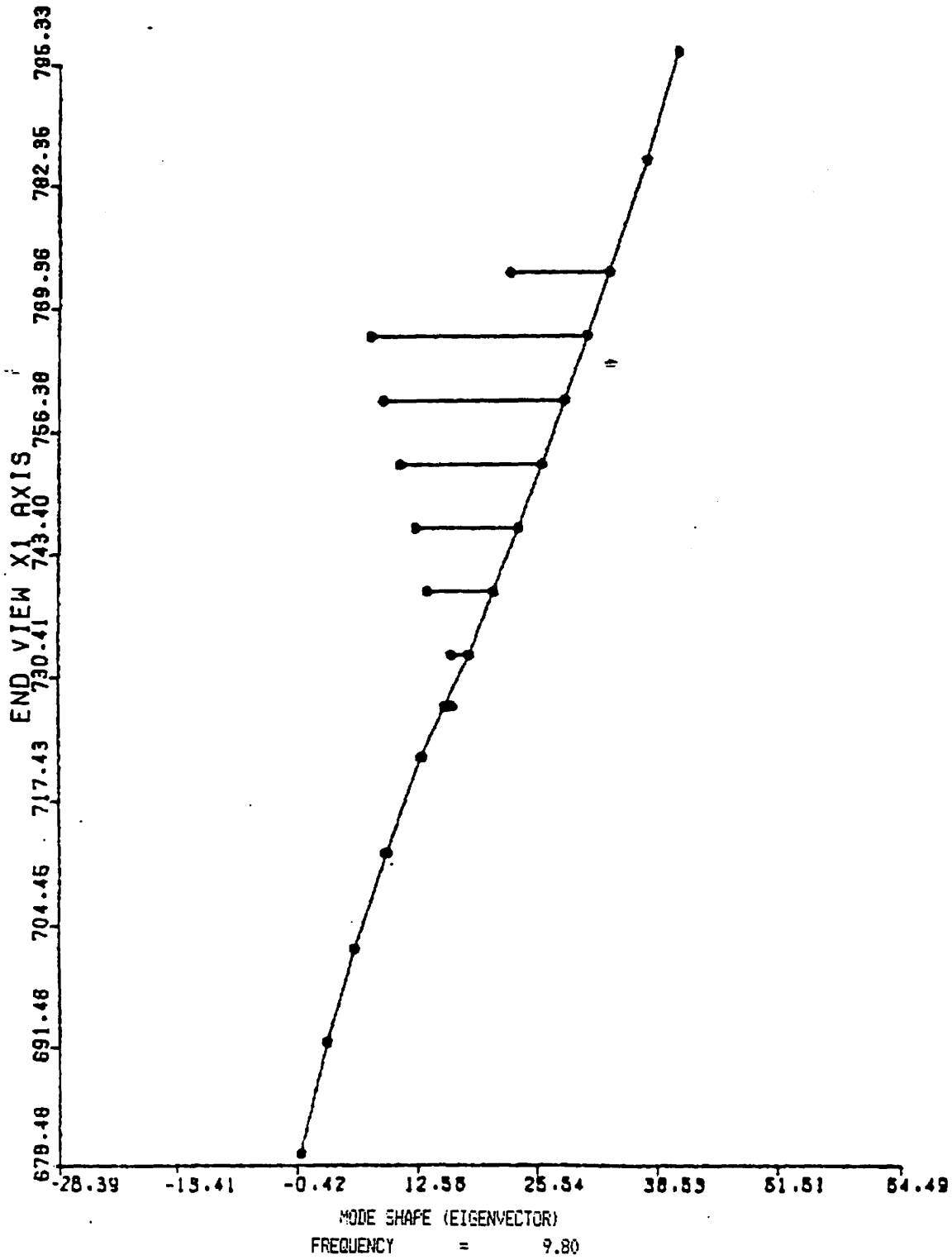

Figure 3.7.2-58 Interior Concrete Structure E-W Translational Plus Torsion, Translational Mode 2

REVISED BY AMENDMENT 6.

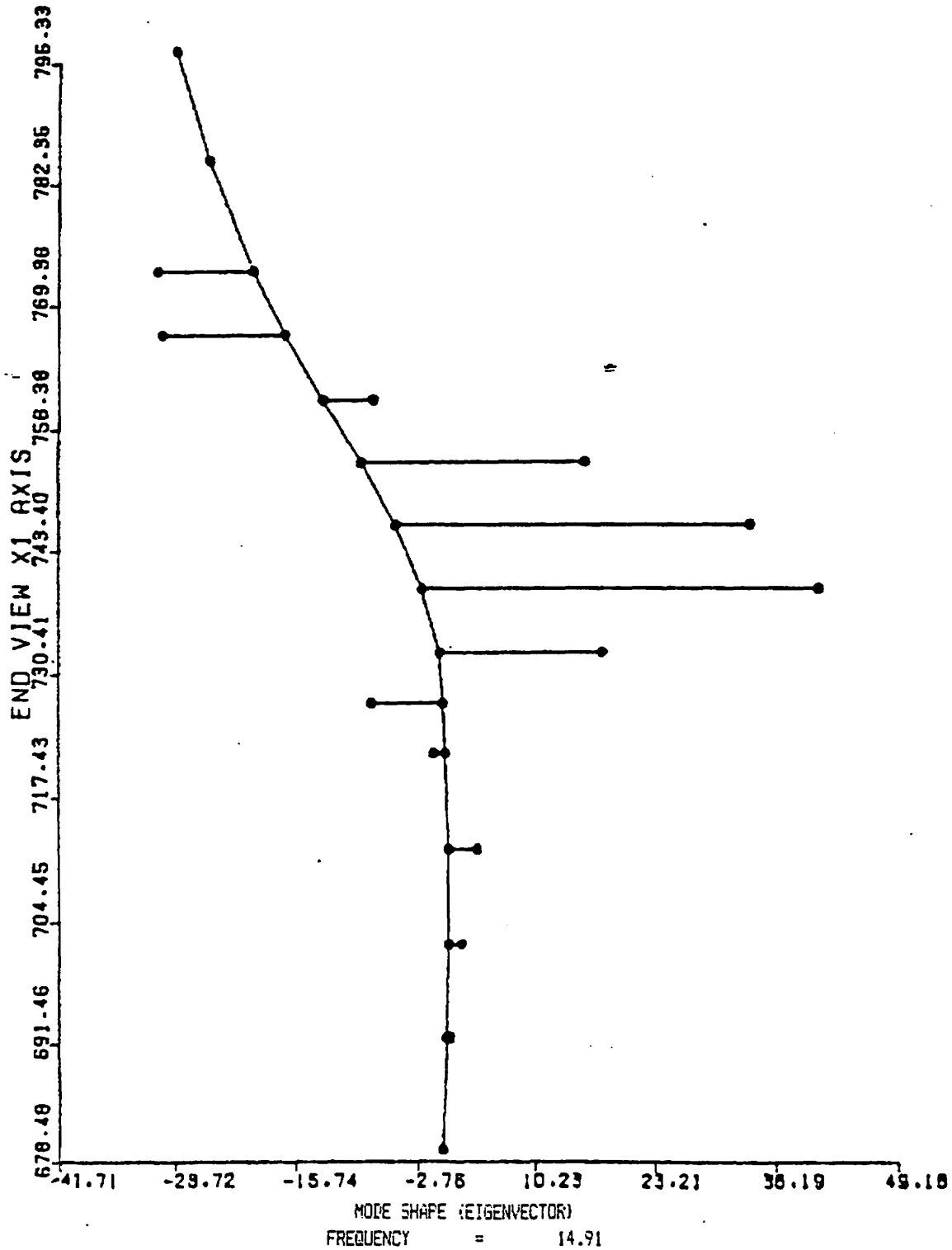

Figure 3.7.2-59 Interior Concrete Structure E-W Translational Plus Torsion, Translational Mode 3

REVISED BY AMENDMENT 6.

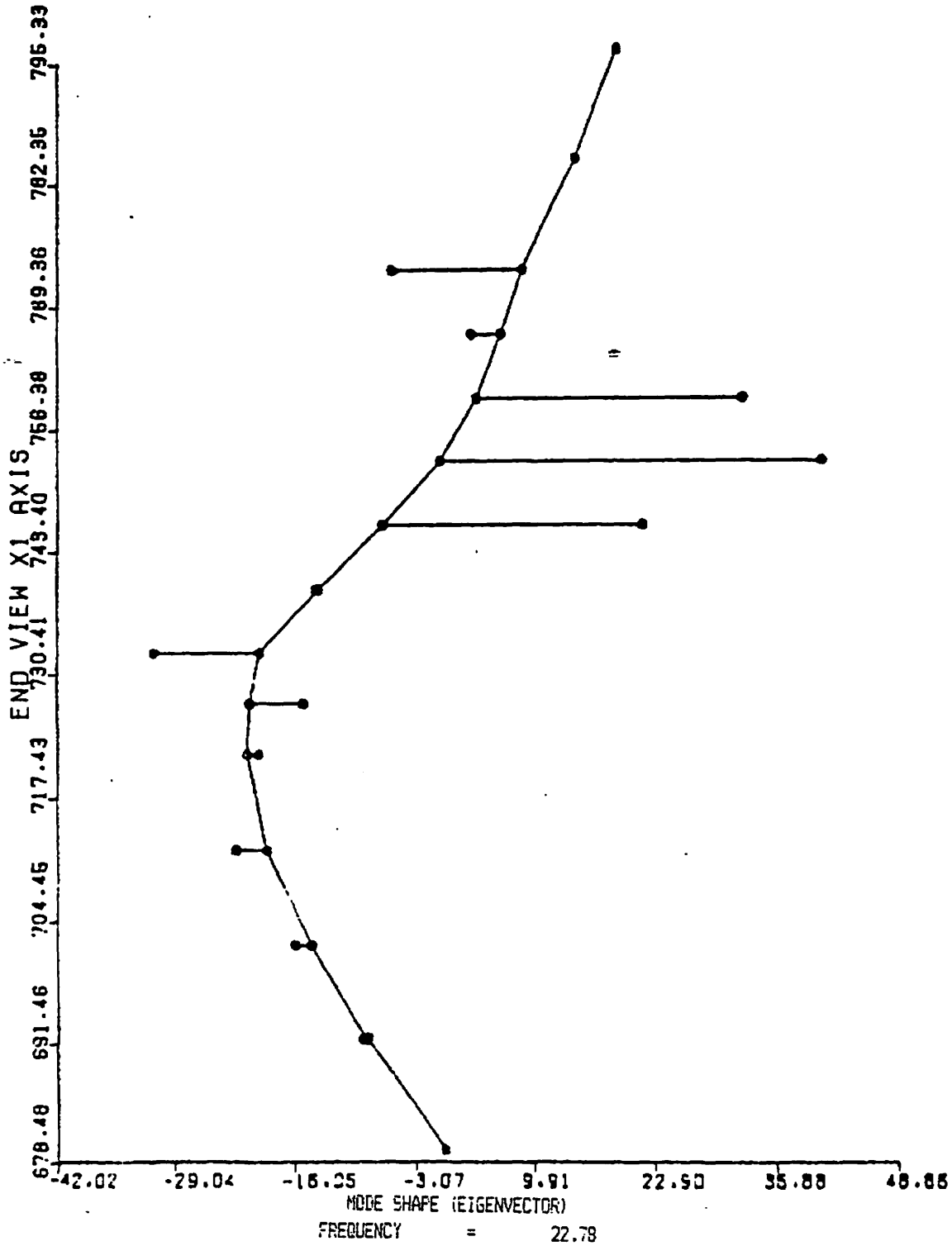

Figure 3.7.2-60 Interior Concrete Structure E-W Translational Plus Torsion, Translational Mode 4

REVISED BY AMENDMENT 6.

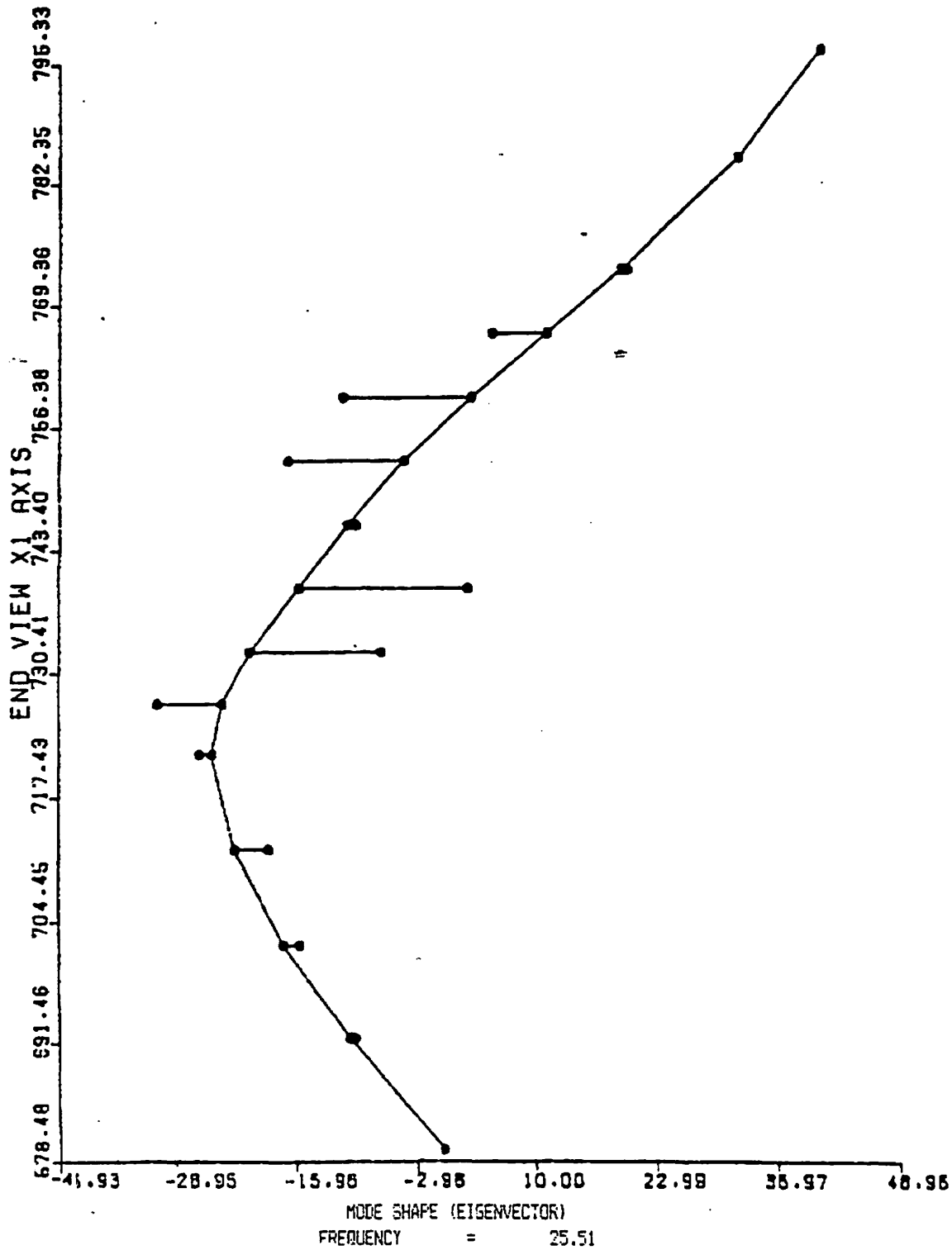

Figure 3.7.2-61 Interior Concrete Structure E-W Translational *Plus Torsion*, Translational Mode 5

REVISED BY AMENDMENT 6.

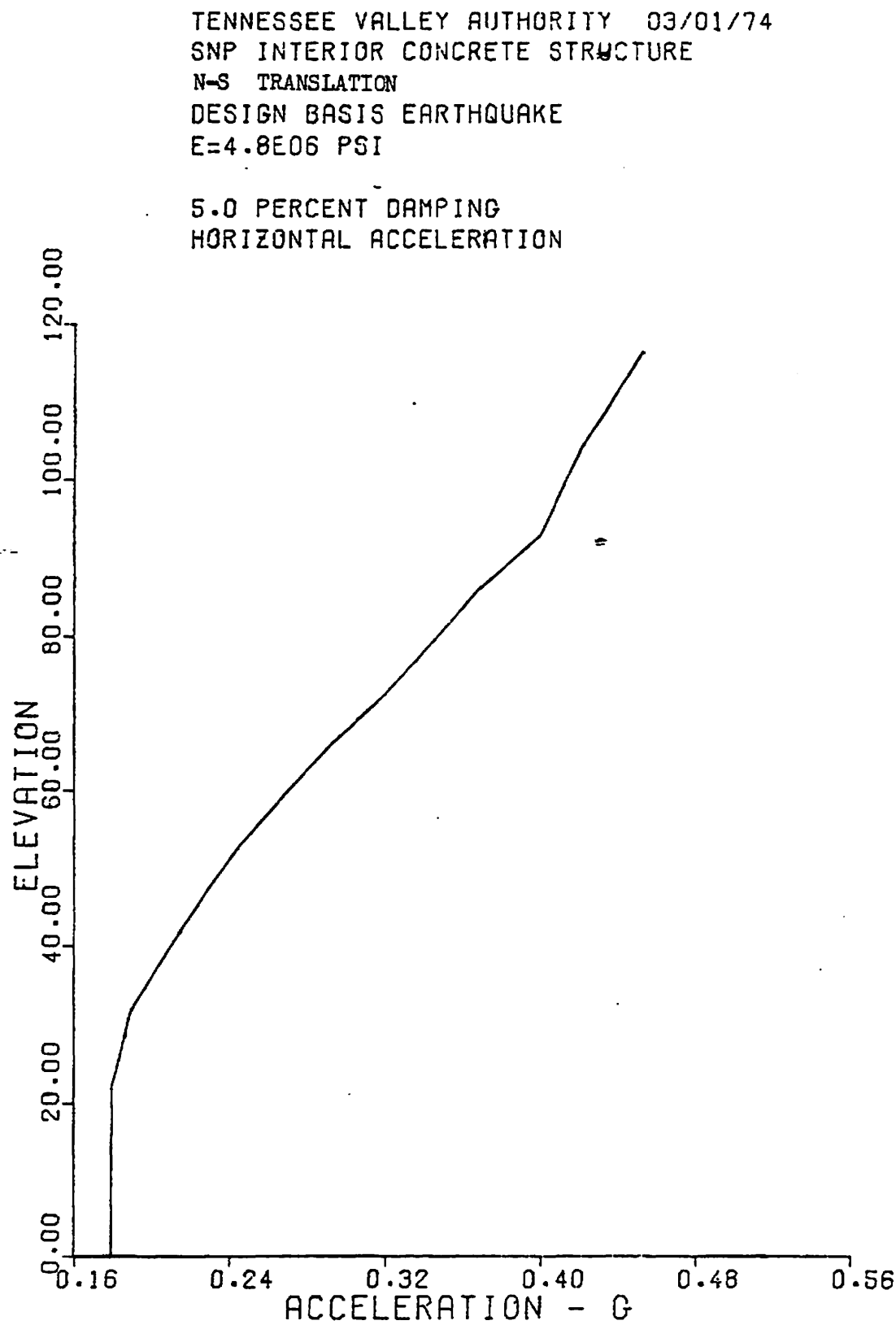

Figure 3.7.2-62

Interior Concrete N-S Translation Response, Maximum Acceleration, Safe Shutdown Earthquake

REVISED BY AMENDMENT 6.

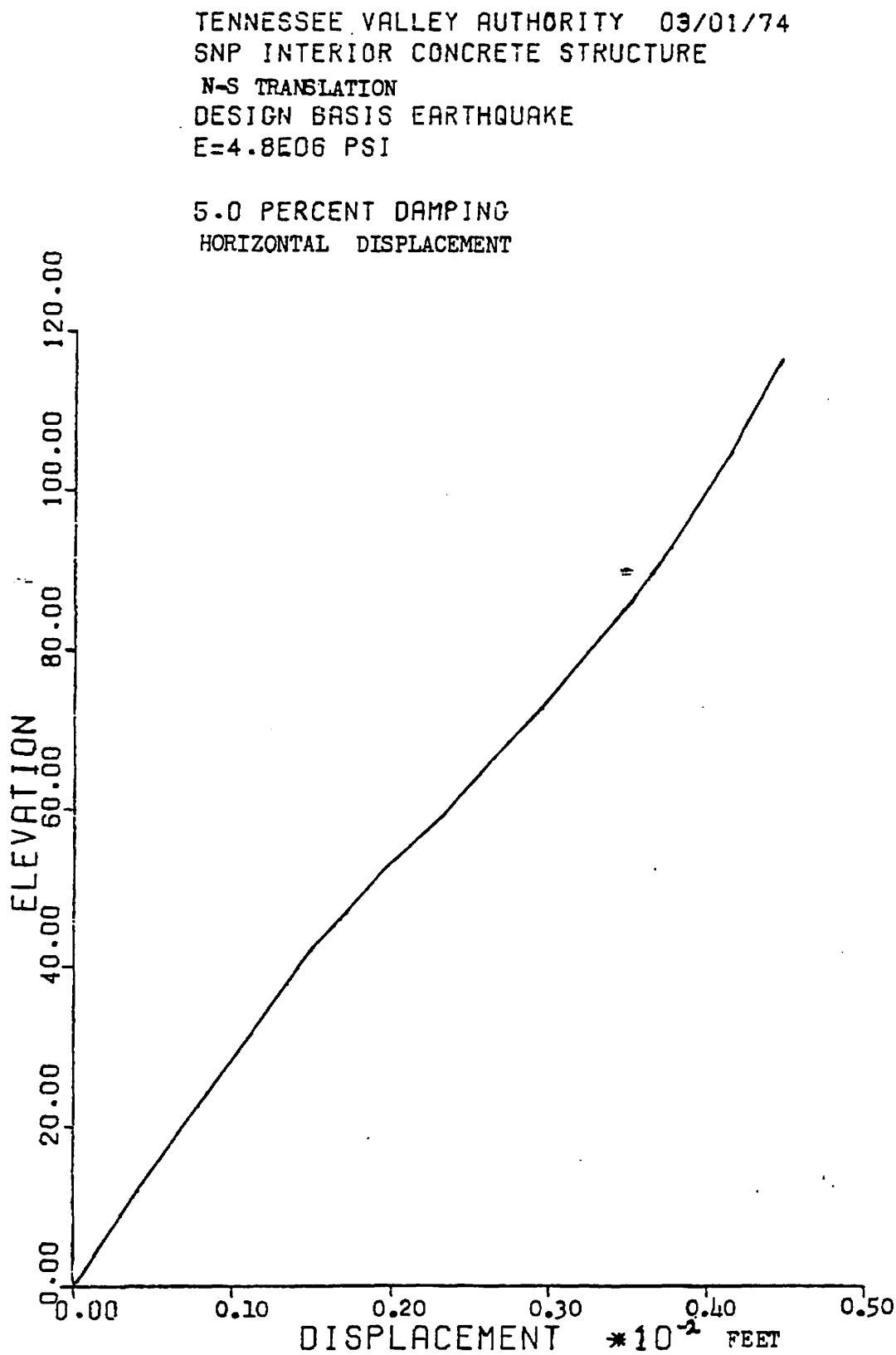

FIGURE 3.7.2-63 Interior Concrete N-S Translation Response, Maximum Deflection, Safe Shutdown Earthquake

REVISED BY AMENDMENT 6.

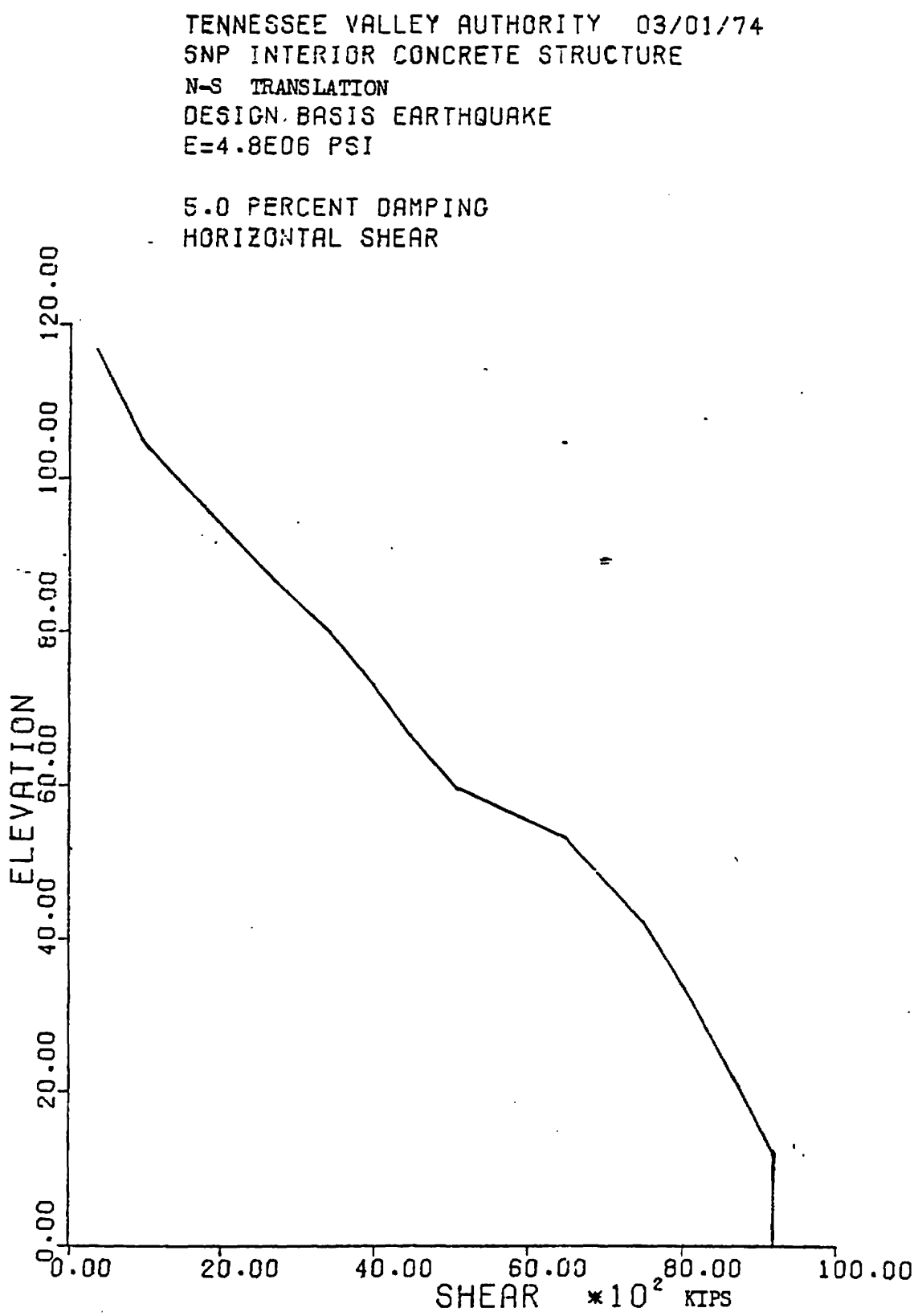

FIGURE 3.7.2-64 Interior Concrete N-S Translation Response, Maximum Shear, Safe Shutdown Earthquake

REVISED BY AMENDMENT 6.

Best Available Historical Image

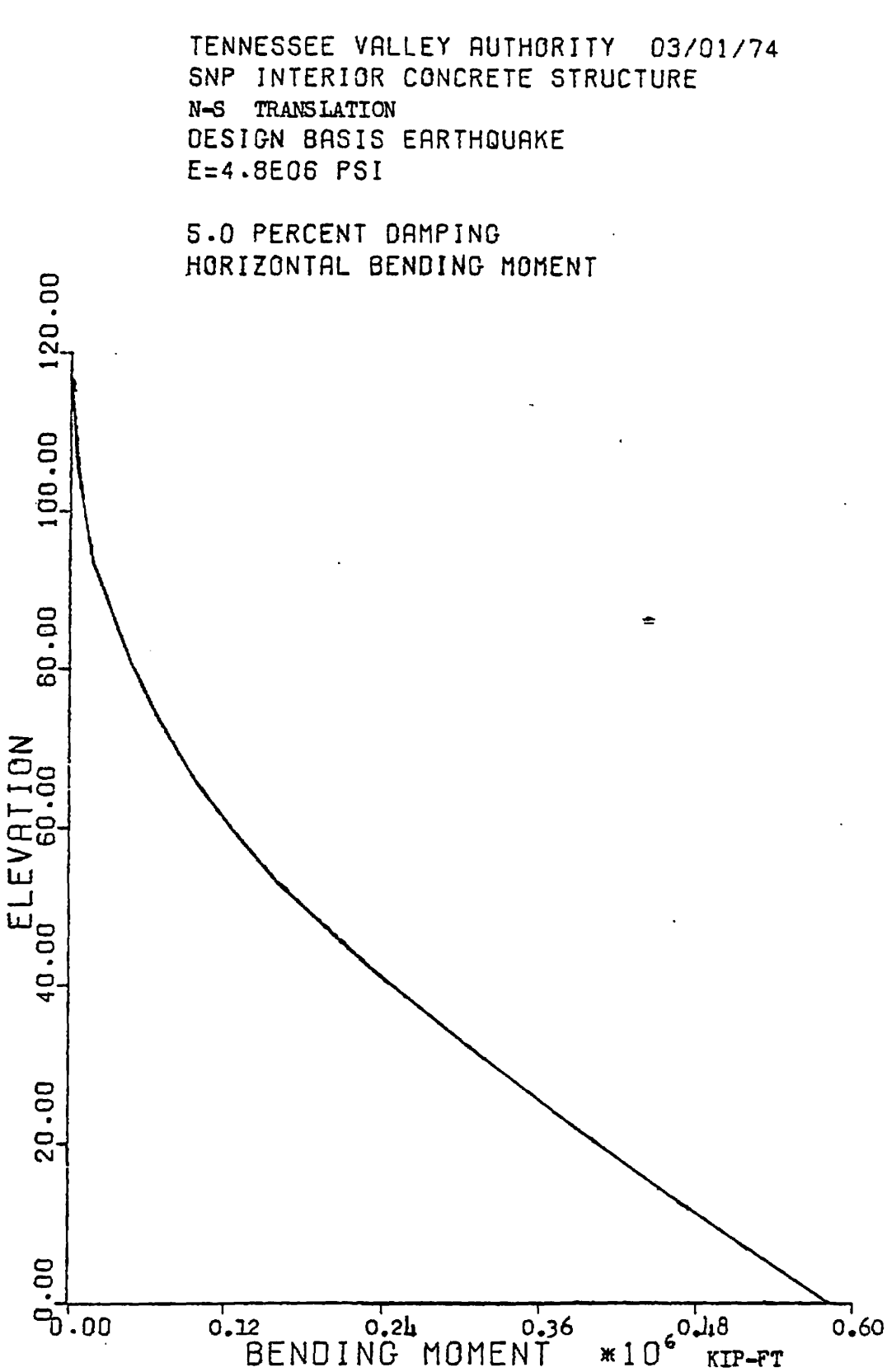

Figure 3.7.2-65 Interior Concrete N-S Translation Response, Maximum Bending Moment, Safe Shutdown Earthquake

REVISED BY AMENDMENT 6.

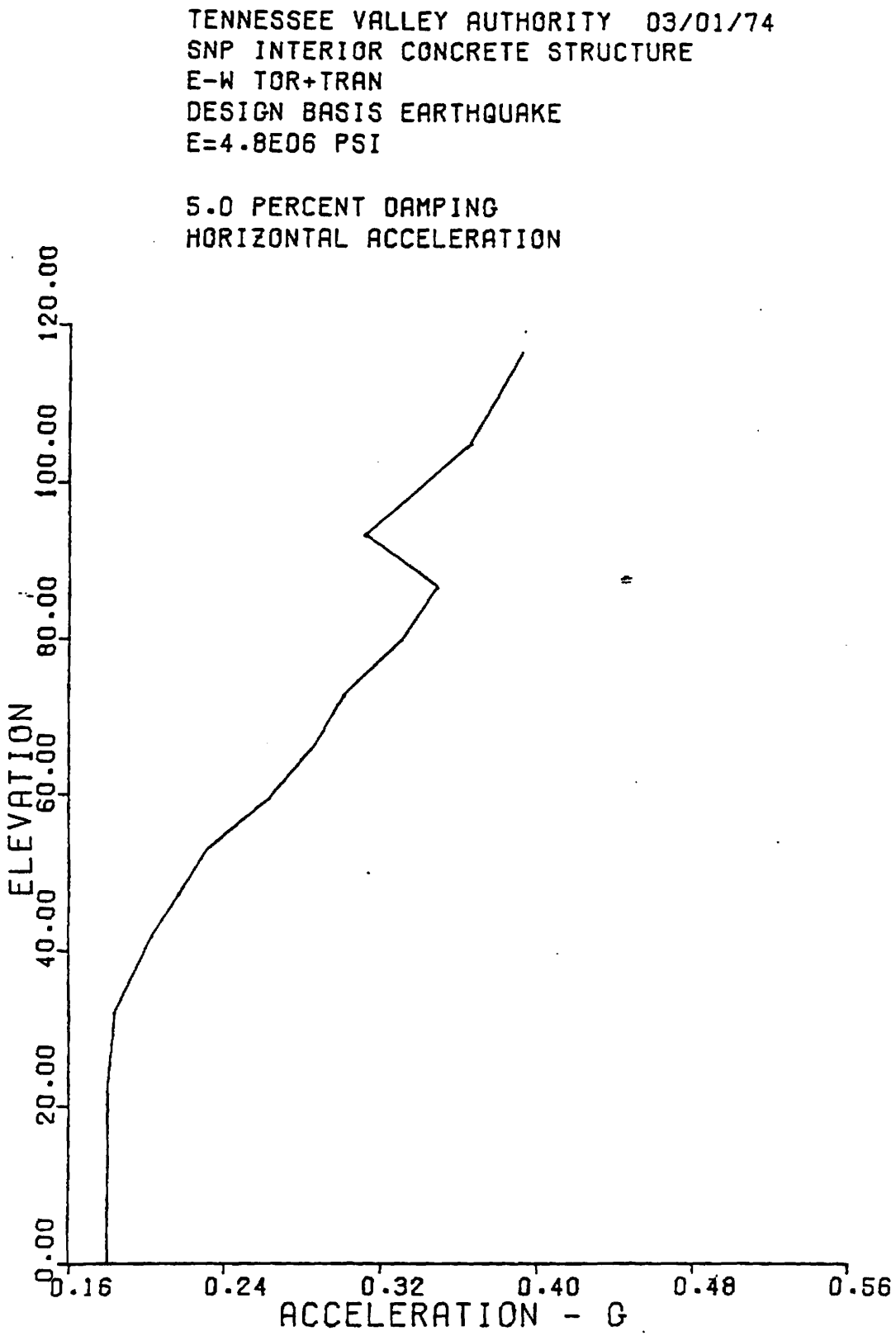

Figure 3.7.2-66 Interior Concrete E-W Translation Plus Torsion Response, Maximum Acceleration, Safe Shutdown Earthquake

REVISED BY AMENDMENT 6.

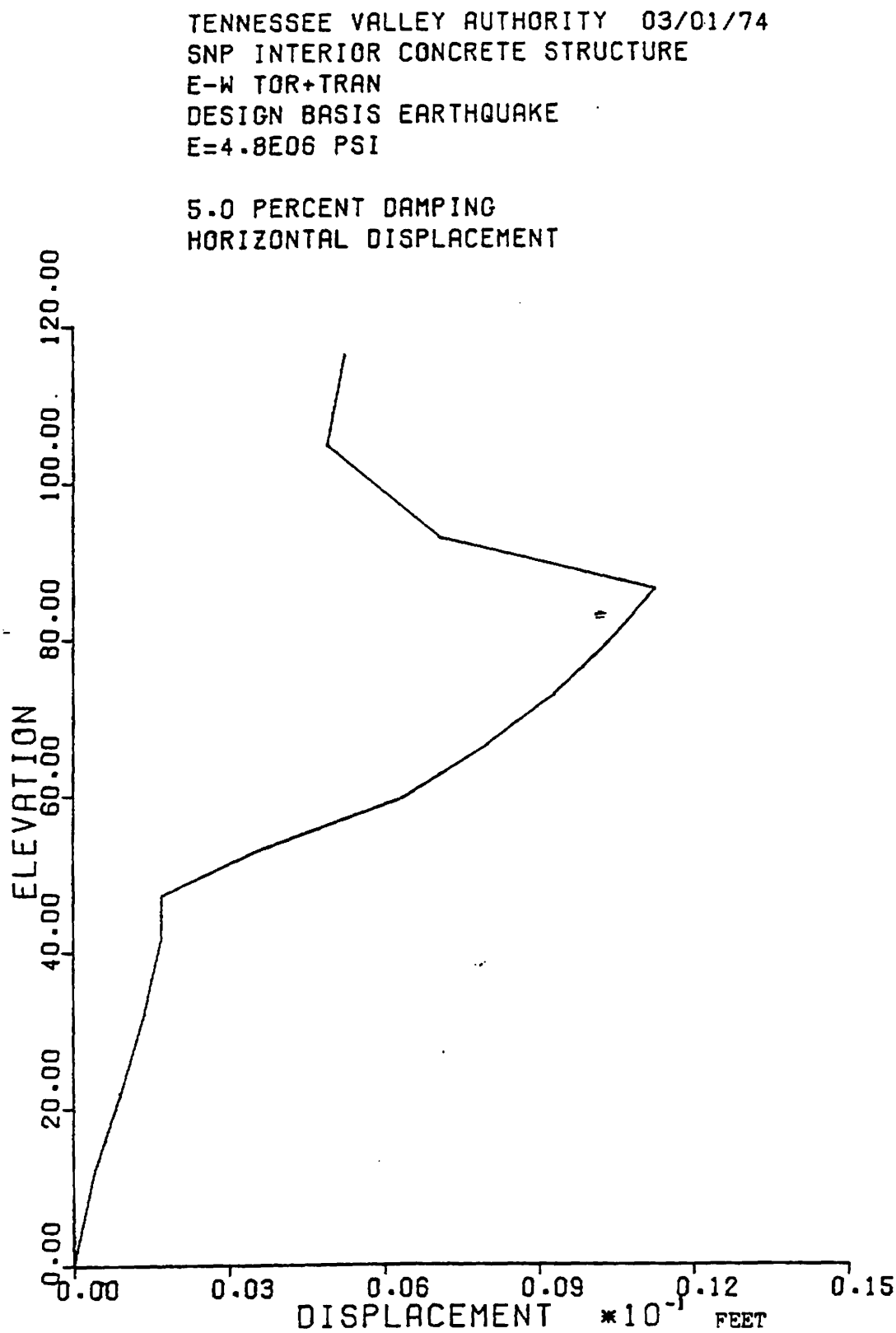

Figure 3.7.2-67 Interior Concrete E-W Translation Plus Torsion Response, Maximum Deflection, Safe Shutdown Earthquake

REVISED BY AMENDMENT 6.

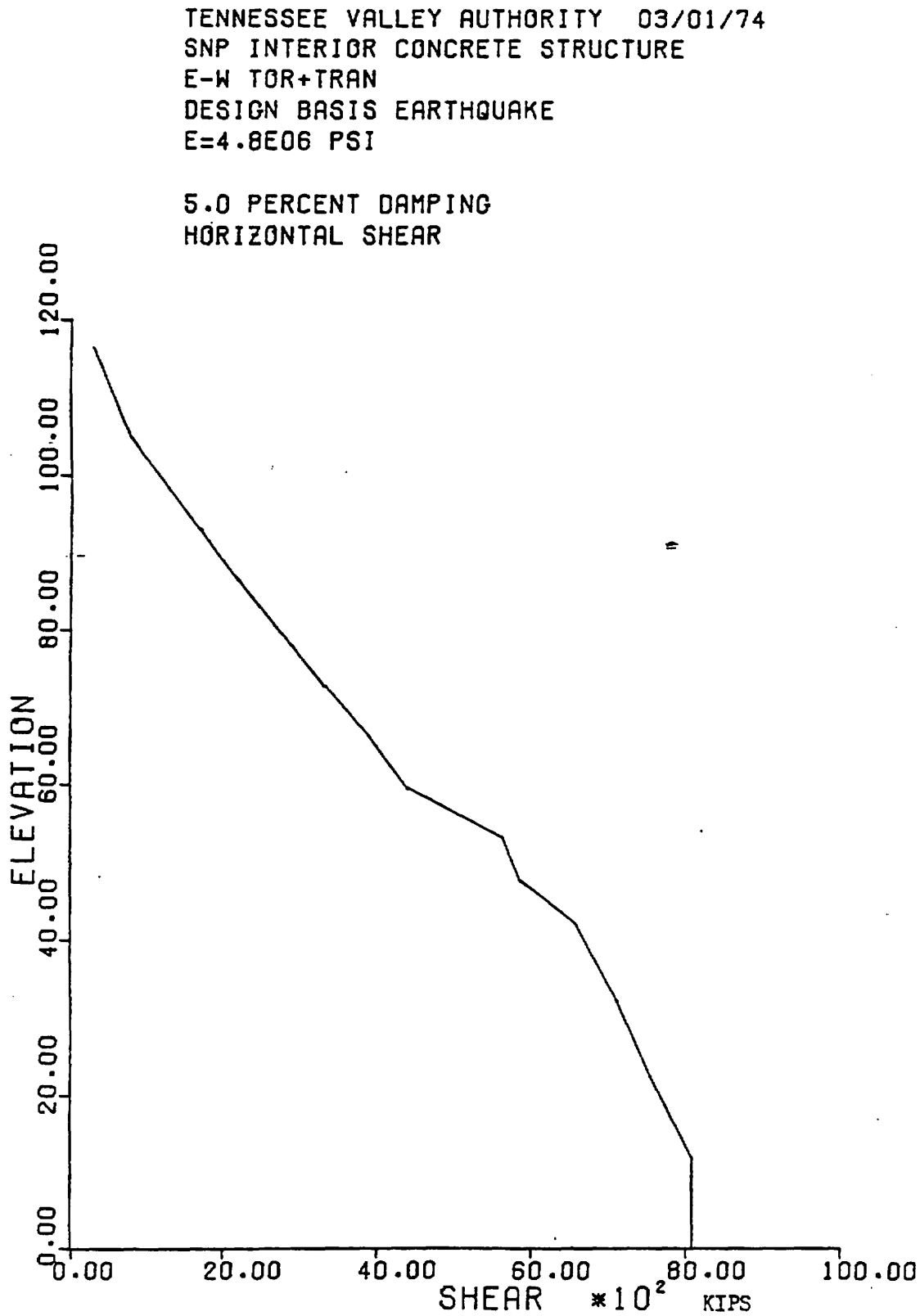

Figure 3.7.2-68 Interior Concrete E-W Translation Plus Torsion Response, Maximum Shear, Safe Shutdown Earthquake

REVISED BY AMENDMENT 6.

Best Available Historical Image

TENNESSEE VALLEY AUTHORITY 03/01/74
SNP INTERIOR CONCRETE STRUCTURE
E-W TOR+TRAN
DESIGN BASIS EARTHQUAKE
E=4.8E06 PSI

5.0 PERCENT DAMPING
HORIZONTAL BENDING MOMENT

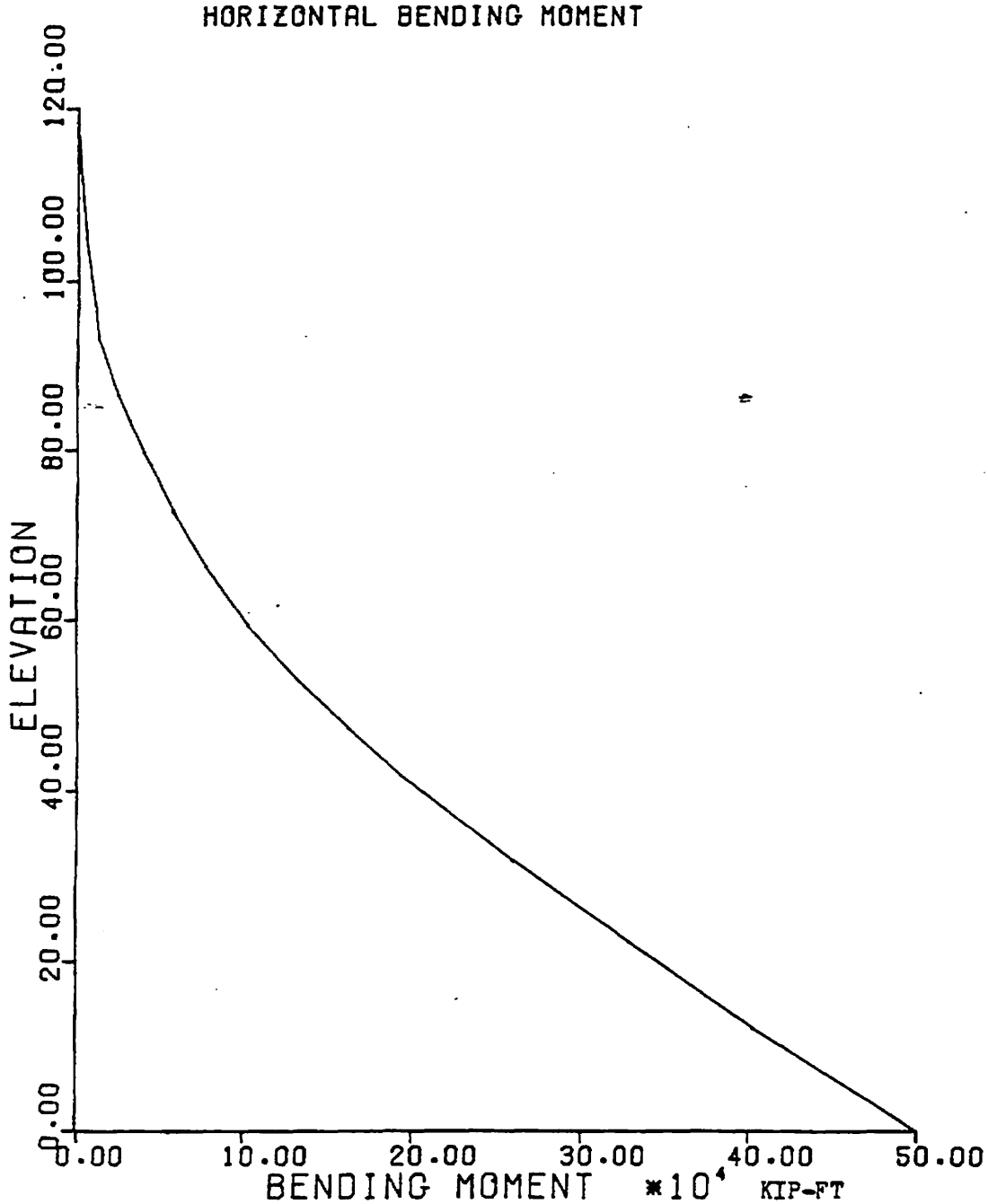

Figure 3.7.2-69 Interior Concrete E-W Translation Plus Torsion Response, Maximum Bending Moment, Safe Shutdown Earthquake

REVISED BY AMENDMENT 6.

Best Available Historical Image

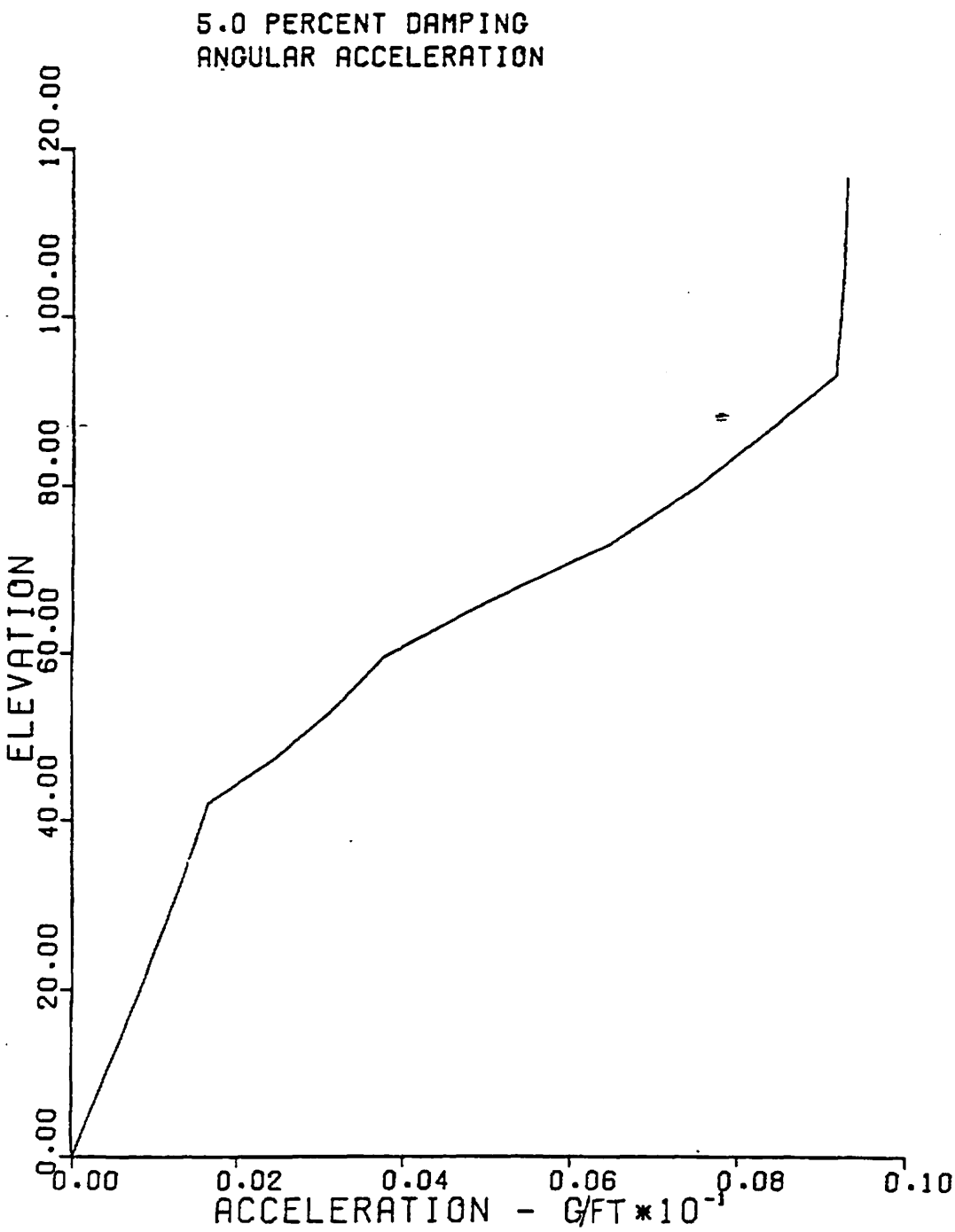

Figure 3.7.2-70 Interior Concrete E-W Translation Plus Torsion Response, Maximum Angular Acceleration Safe Shutdown Earthquake

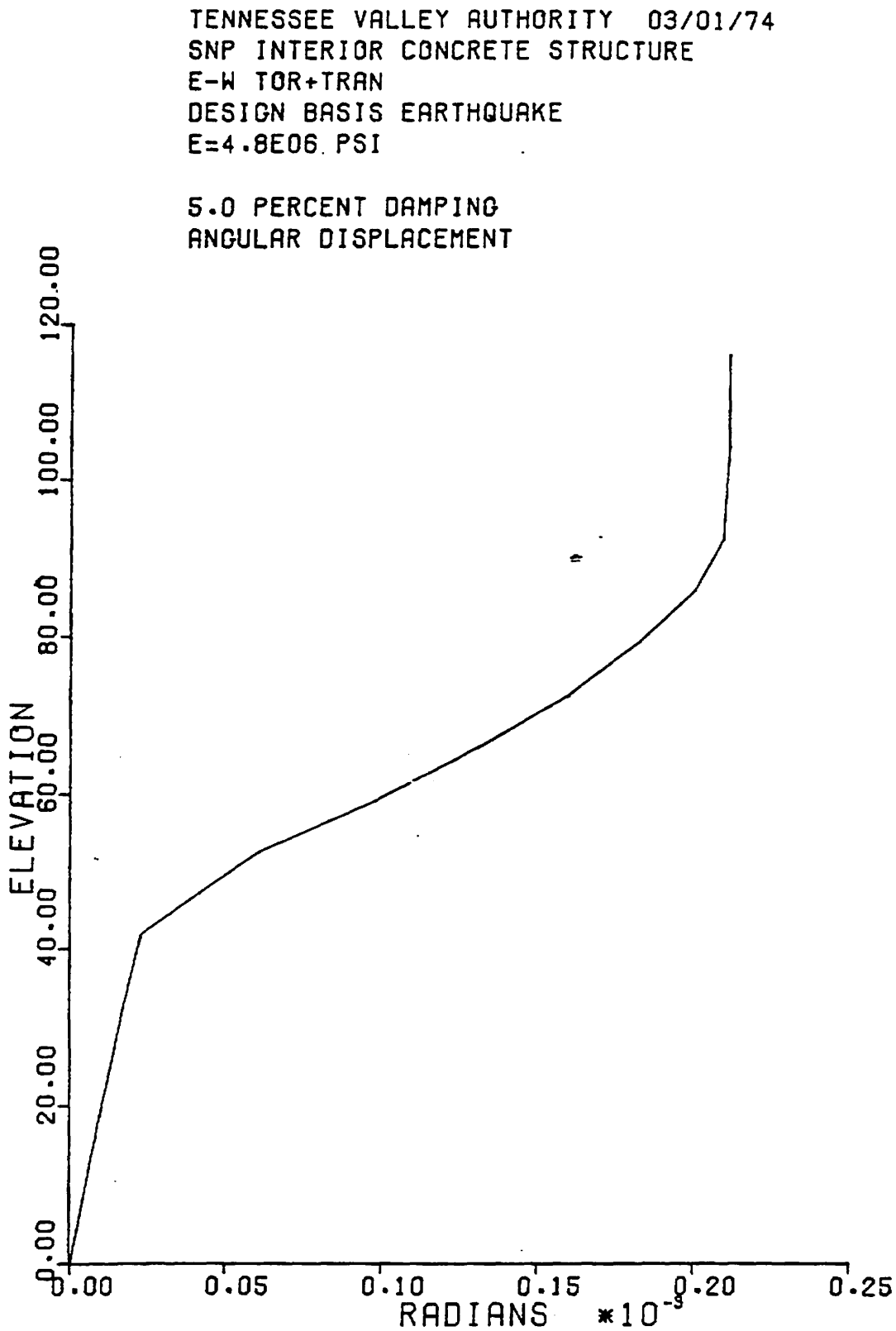

Figure 3.7.2-71 Interior Concrete E-W Translation Plus Torsion Response, Maximum Angular Displacement, Safe Shutdown Earthquake

REVISED BY AMENDMENT 6.

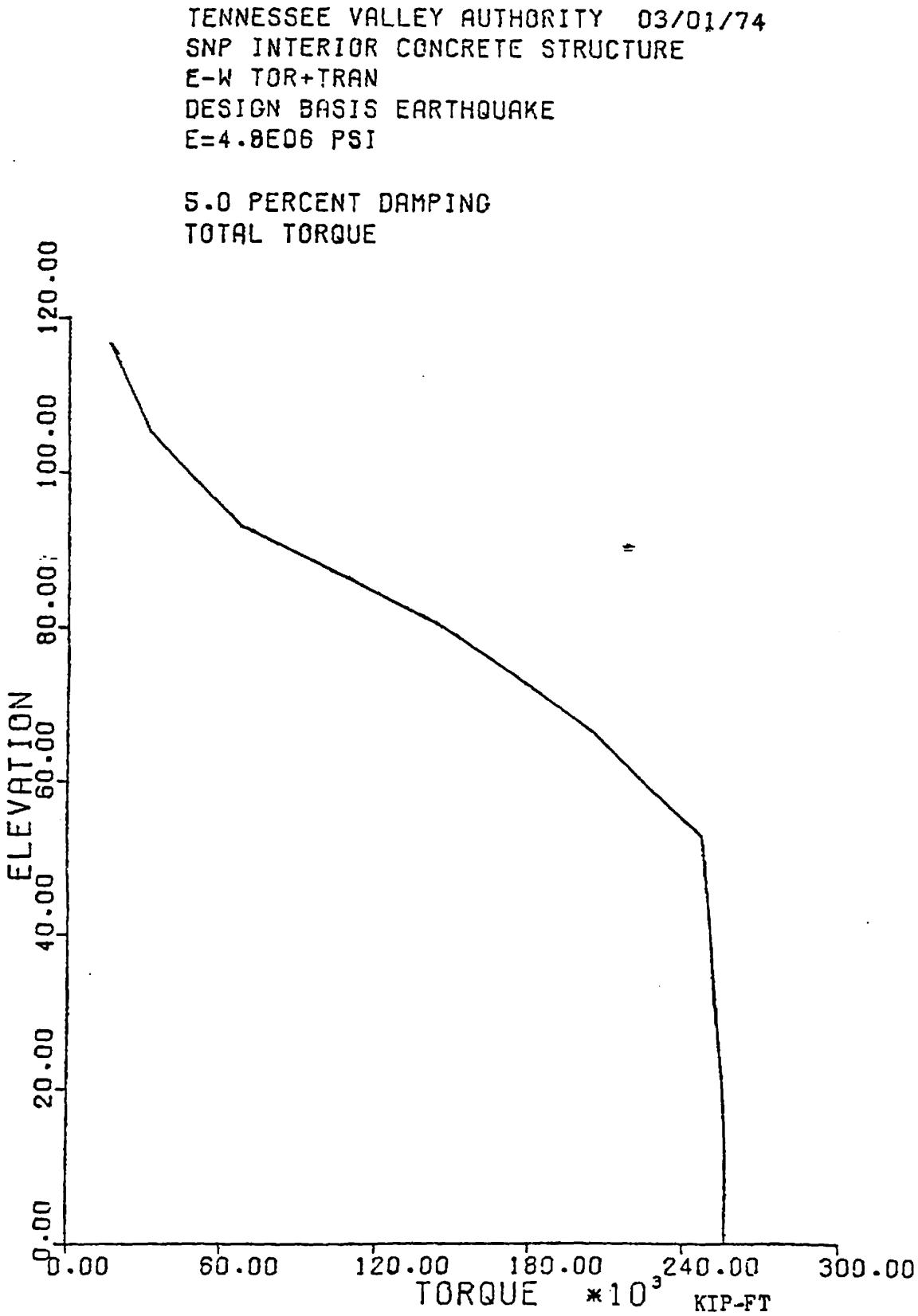

Figure 3.7.2-72 Interior Concrete E-W Translation Plus Torsion, Reponse Maximum Torque, Safe Shutdown Earthquake

REVISED BY AMENDMENT 6.

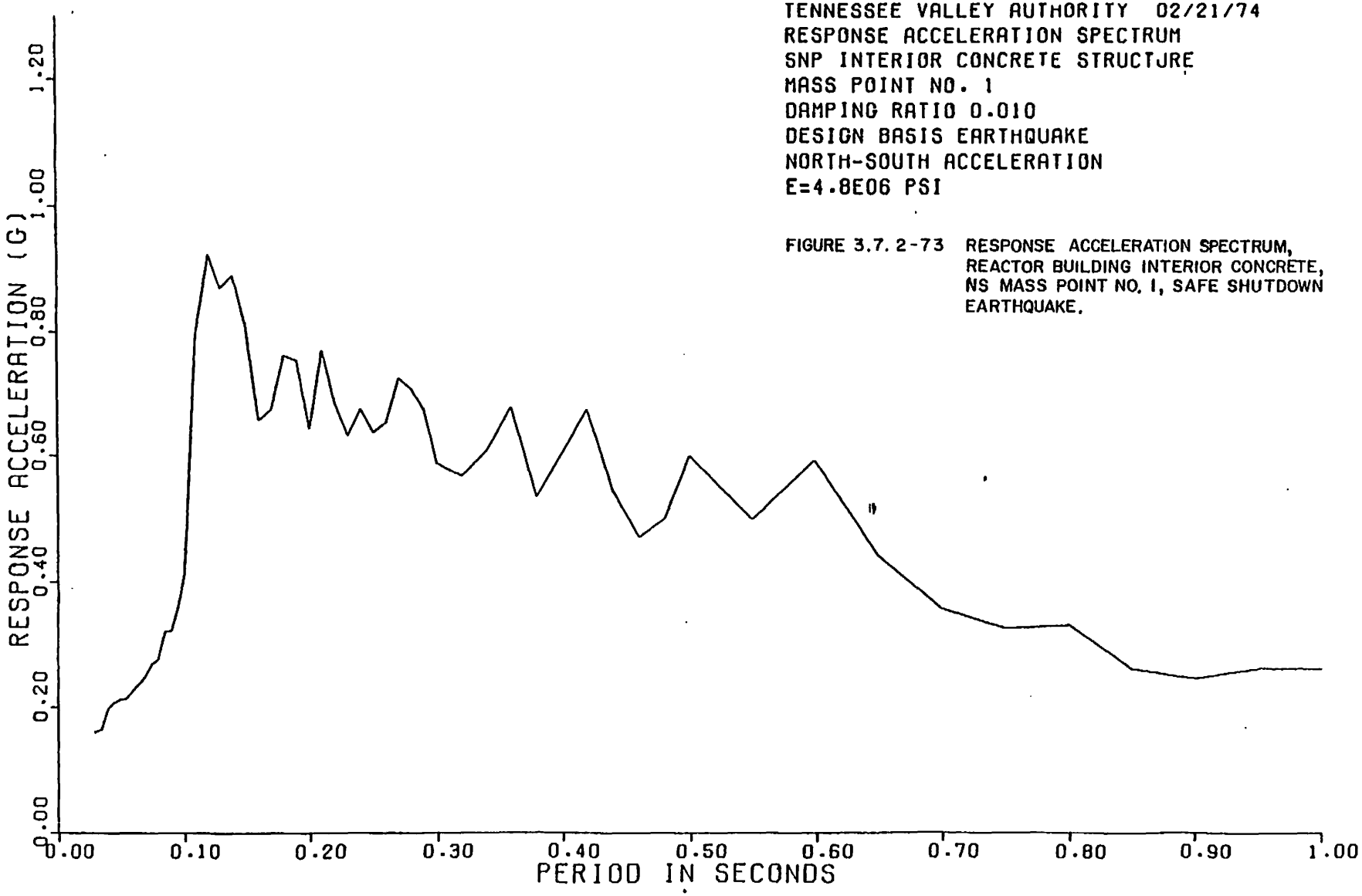

FIGURE 3.7.2-73 RESPONSE ACCELERATION SPECTRUM, REACTOR BUILDING INTERIOR CONCRETE, NS MASS POINT NO. 1, SAFE SHUTDOWN EARTHQUAKE.

REVISED BY AMENDMENT 6

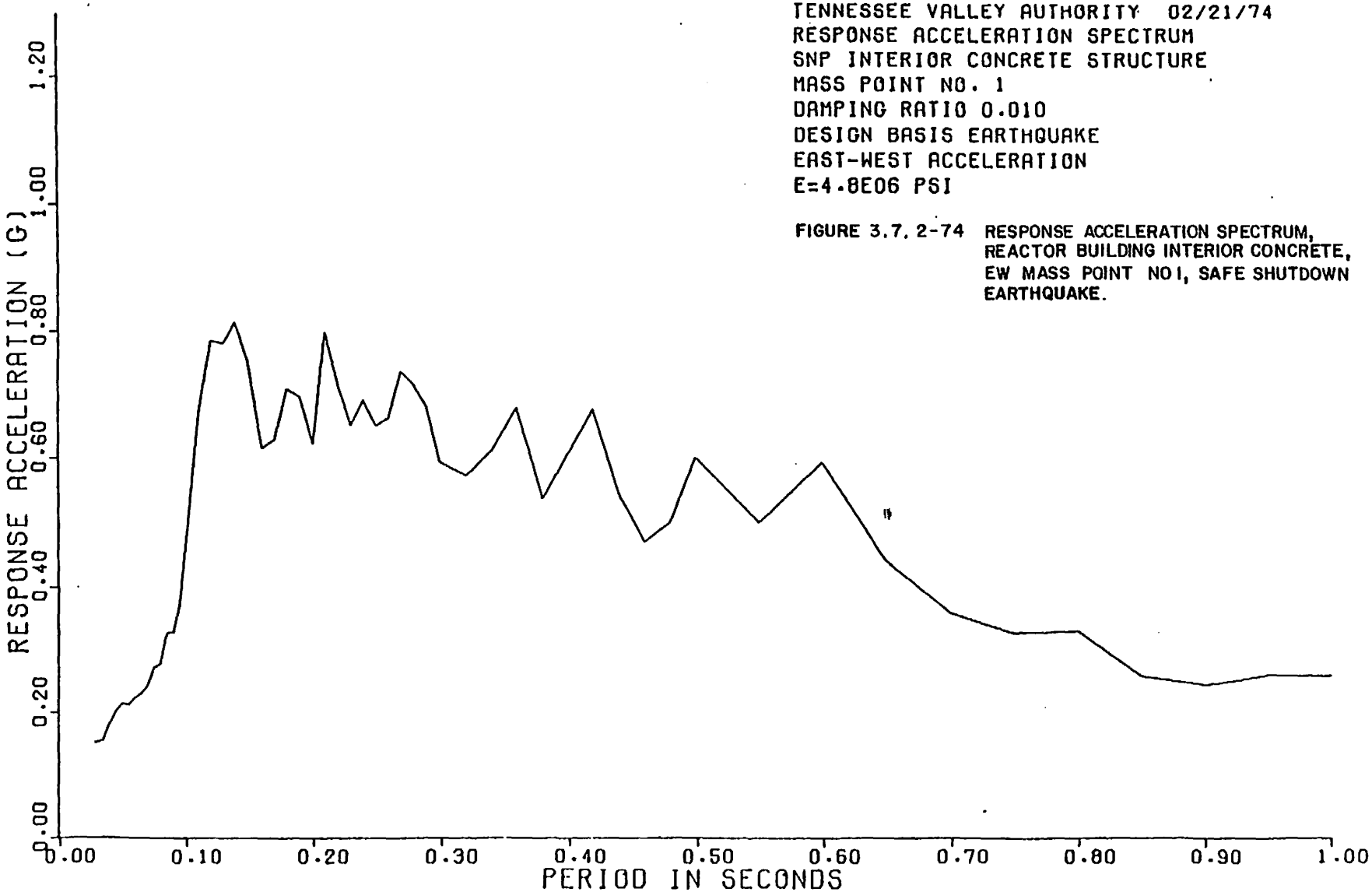

FIGURE 3.7.2-74 RESPONSE ACCELERATION SPECTRUM, REACTOR BUILDING INTERIOR CONCRETE, EW MASS POINT NO I, SAFE SHUTDOWN EARTHQUAKE.

REVISED BY AMENDMENT 6.

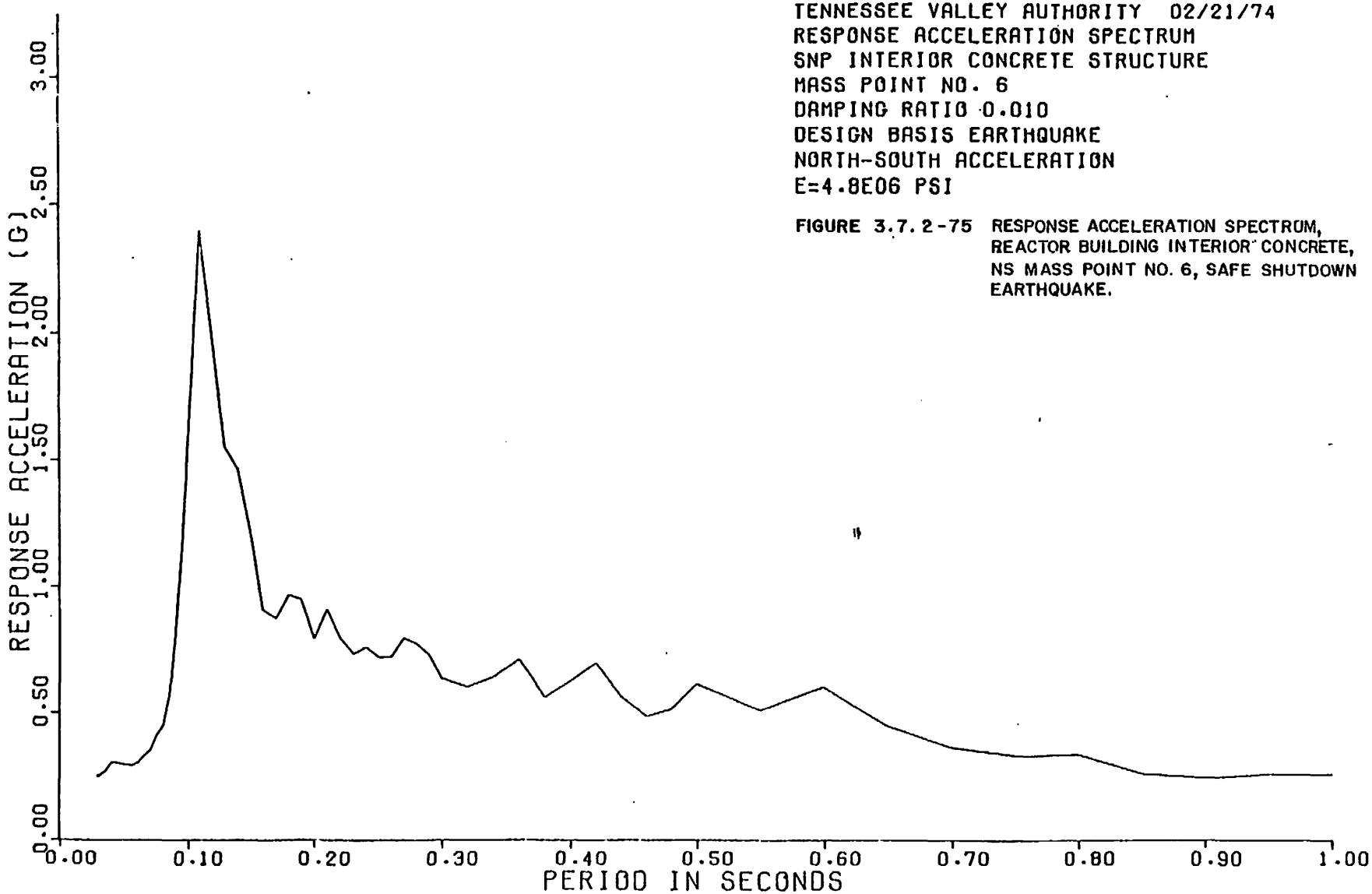

FIGURE 3.7.2-75 RESPONSE ACCELERATION SPECTRUM, REACTOR BUILDING INTERIOR CONCRETE, NS MASS POINT NO. 6, SAFE SHUTDOWN EARTHQUAKE.

REVISED BY AMENDMENT 6.

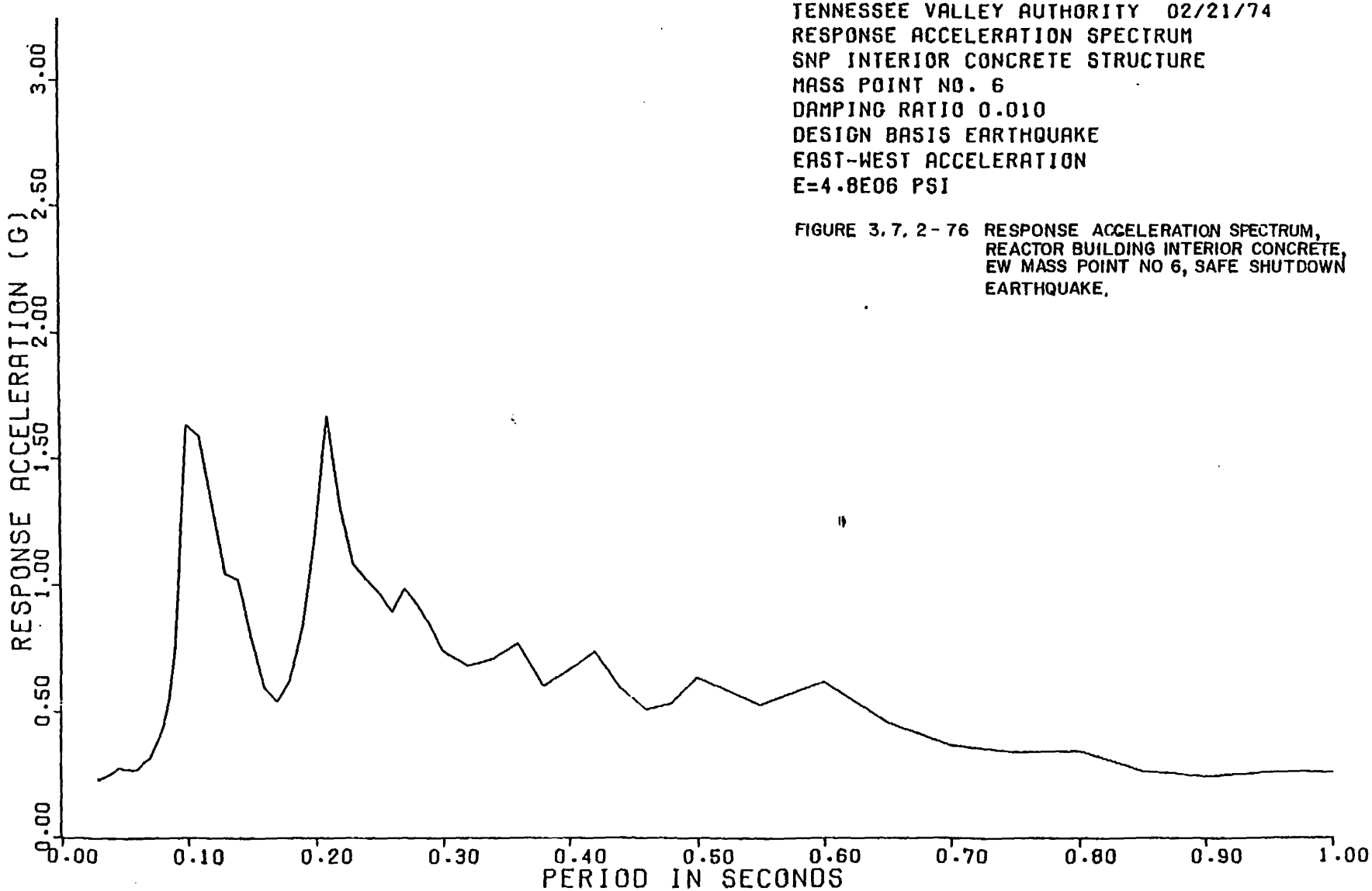

FIGURE 3.7.2-76 RESPONSE ACCELERATION SPECTRUM, REACTOR BUILDING INTERIOR CONCRETE, EW MASS POINT NO 6, SAFE SHUTDOWN EARTHQUAKE.

REVISED BY AMENDMENT 6.

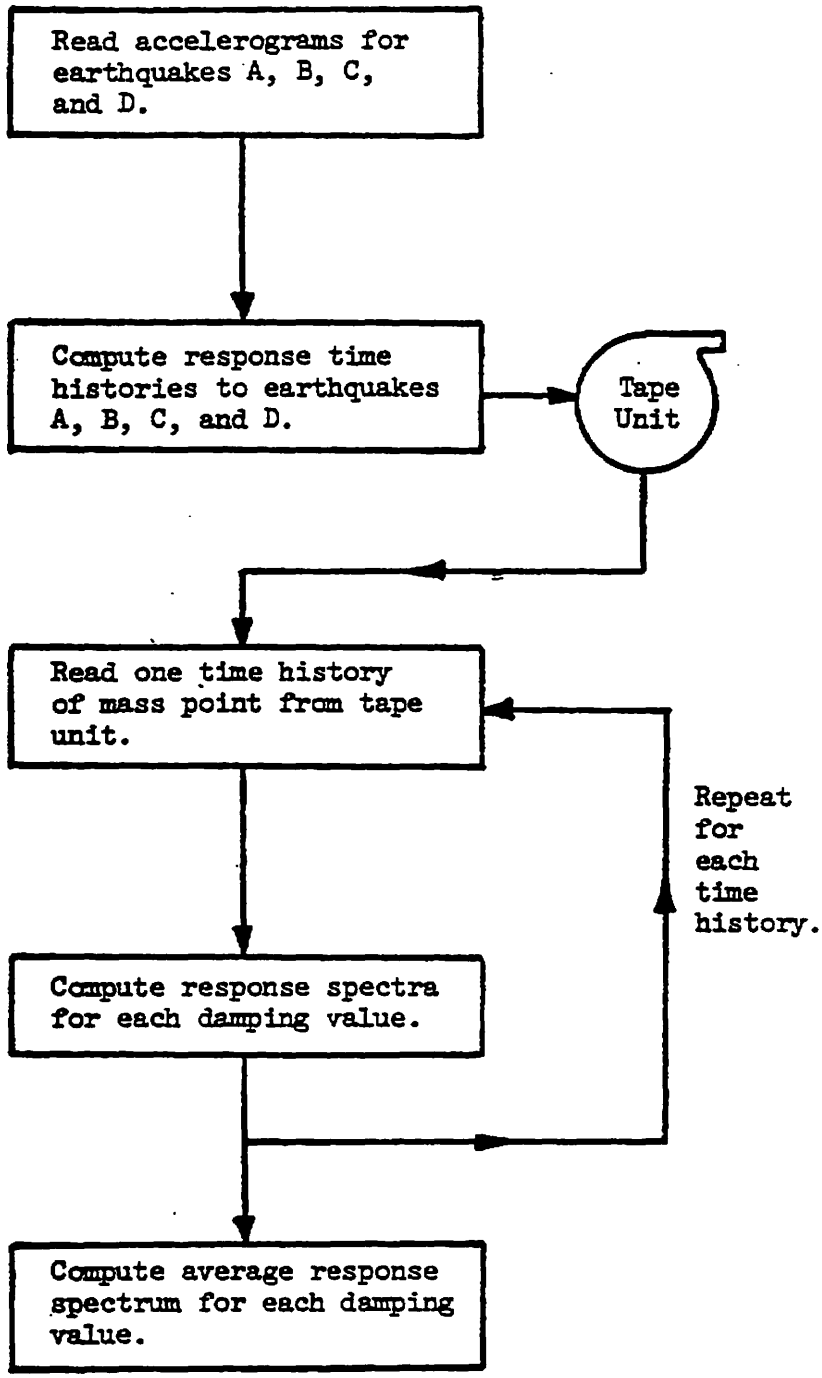

Figure 3.7.2-77 Flow Chart for Development of Floor Response Spectra

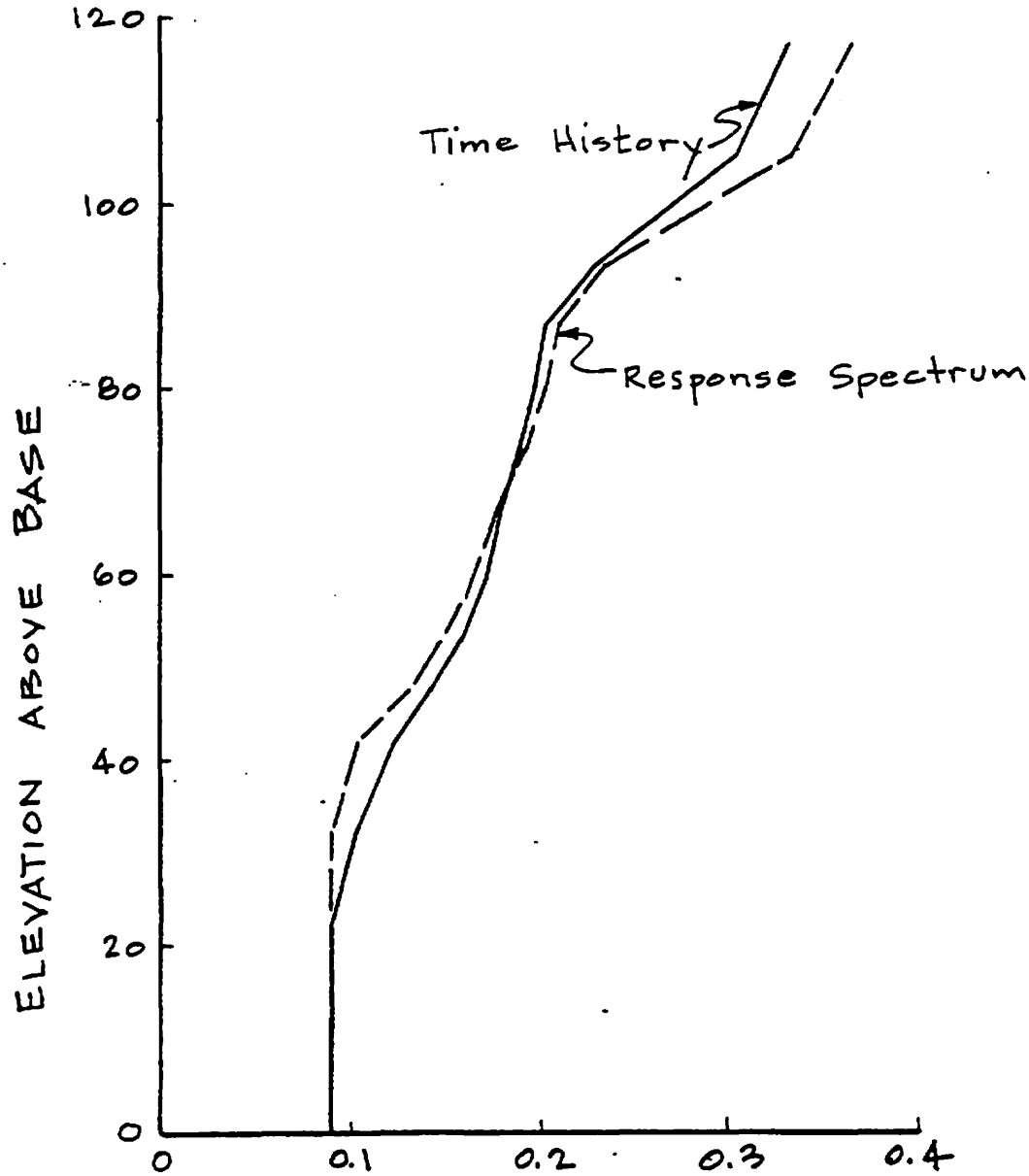

Figure 3.7.2-78 Comparison of Time History and Response Spectrum Response

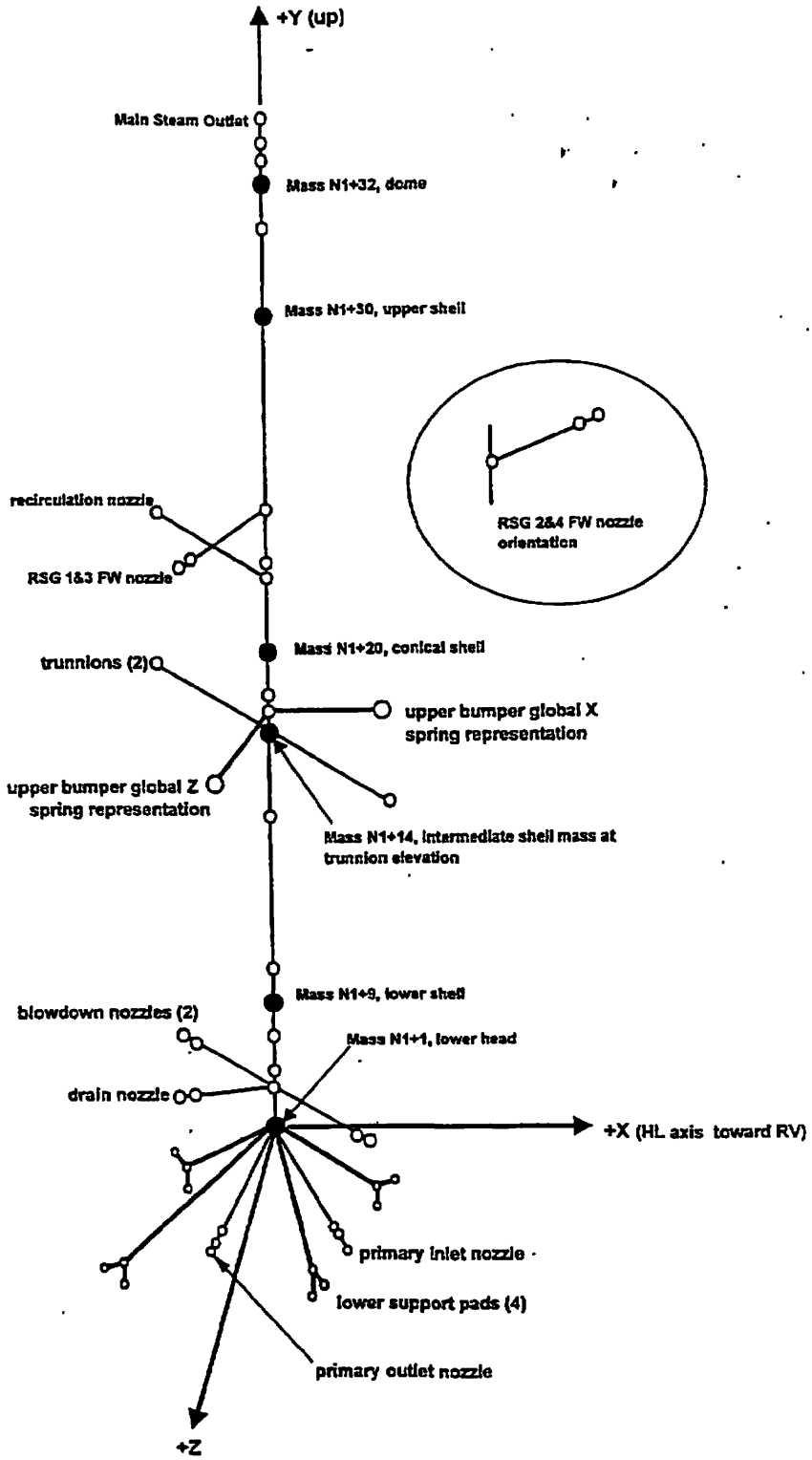

FIGURE 3.7.2-79

Replacement Steam Generator One-Stick Model

Revised by Amendment 18

3.8 DESIGN OF CATEGORY I STRUCTURES

3.8.1 Concrete Containment

The Reactor Building is a Category I structure in its entirety and is designed to remain functional in the event of a SSE, or tornado, or a flood.

3.8.1.1 Shield Building

The Shield Building, shown in Figures 1.2.3-11, -12, and -13, is a reinforced concrete structure surrounding the steel containment structure and is designed to provide: radiation shielding from accident conditions, radiation shielding from parts of the Reactor Coolant System during operation, and protection of the steel containment vessel from low temperatures, adverse atmospheric conditions, external missiles, and flood. The Shield Building provides barrier for the annulus ventilation system which also serves as a redundant second containment barrier for control of leakage. The Shield Building is a reinforced concrete cylinder supported by a circular base slab and covered at the top with a spherical dome. It is located adjacent to the Auxiliary Building, Valve Room Buildings, and the Additional Equipment Building, as shown in Figure 1.2.3-1. It is physically separated from these buildings by a 1-inch expansion joint. Only the base slab resists the LOCA pressure load which is transmitted to it through a steel plate liner anchored to its top face and also through the anchors of the steel containment shell, interior structures and piping and equipment supports to the base slab. For further discussion of the base slab see Section 3.8.5.1.

The cylinder wall is approximately 150 feet in height from the liner on the base slab to the spring line of the dome. It has an inside diameter of 125 feet-1 inch and a thickness of 3 feet. The approximate inside height is 175 feet from the liner on the base slab to the dome apex. Conventional steel reinforcing bars were used throughout the structure and were placed in a horizontal and vertical pattern in each face of the cylinder wall. The area of reinforcement in each direction of each face is not less than 0.0015 times the gross concrete area.

The effects of penetrations through the wall were considered. Penetrations, 12 inches or less in diameter, do not significantly disturb the reinforcing pattern in the wall. Therefore, no special reinforcing considerations were made at these areas.

For penetrations larger than 12 inches, reinforcing is terminated at the opening. Supplemental reinforcing is added, both vertically and horizontally, to replace the reinforcing terminated. The amount of supplemental reinforcing added is equal to or greater than the amount of reinforcing removed and is placed adjacent to the penetration. In addition, rectangular and square box-outs in the wall have diagonal reinforcing across the corners. All reinforcing bars were lap spliced in accordance with ACI 318-63 requirements for Strength Design.

Reinforcing steel bars in the dome were arranged in a radial and circumferential pattern. A grid pattern was used at the crown of the dome.

A ring tension beam is provided at the dome-cylinder junction to resist the outward thrust from the dome roof. The tensile force in the ring beam is resisted by 24 No. 11 reinforcing bars. These bars are spliced by lapping 8 feet 6 inches. Laps are uniformly staggered around the

circumference of the ring beam so that at any cross section only four bars are spliced out of the total 24 bars. That is, at any section, 20 bars are continuous and unspliced. These continuous, unspliced bars alone will carry the imposed load with only a 20 percent increase in stress. Stirrups enclosing the main reinforcement are spaced on 15-inch centers.

To facilitate removal of the old steam generators (OSGs) and installation of the replacement steam generators (RSGs) during the Unit 1 and Unit 2 steam generator replacement (SGR), two construction openings were cut in the concrete shield building dome of each unit. These openings were restored by splicing new reinforcing bar to the existing reinforcing bar using Bar-Lock couplers and pouring new concrete to close the openings.

3.8.1.1.1 Equipment Hatch Doors and Sleeves

An equipment hatch door and one sleeve are provided for each Reactor Unit. The steel sleeve forms an access through the Shield Building wall to the equipment hatch in the containment vessel for access to upper containment. Each sleeve extends from inside the Shield Building to the shielded passageway leading to the Auxiliary Building floor Elevation 734. Each door is of the hinged, double-leaf, marine type with seals for providing an airtight closure between the annulus surrounding the steel containment vessel and the inside of the Auxiliary Building. A door will normally be opened only when the reactor is in the shutdown, depressurized condition such that secondary containment is not required.

The sleeves, embedded in the Shield Building walls, are of welded steel construction, rectangular in cross section. The doors are hinged to the sleeves on the end toward the outside of the Shield Building wall and are of welded construction consisting of structural shapes with a steel skin plate.

Sealing of a door when closed is by means of solid, molded rubber seals mounted on the door. The seals contact the edge of the sleeve at the top and sides, a removable seal bar at the floor level, and a sealing bar at the meeting line of the two leaves.

The sealing bar at the meeting line is mounted on one of the leaves. Penetrations through the doors are sealed with solid rubber 0-ring type seals.

The doors are opened and closed manually. Latching of the doors in the closed position is accomplished by multiple hand-lever operated dogs acting on wedge surfaces around the perimeter and meeting edges of the door leaves. The doors are provided with concrete missile shield blocks on their Auxiliary Building side.

The doors and sleeves will maintain their structural and leak tight integrity and remain operational after being subjected to the environmental or accident conditions listed in Section 3.8.1.4.

3.8.1.2 Applicable Codes, Standards, and Specifications

The structural design of the Reinforced Concrete Shield Building is in compliance with the American Concrete Institute 318-63 building code working stress design requirements. All reinforcing steel conforms to the requirements of ASTM Designation A 615, Grade 60. Construction was carried out under the requirements of TVA Construction Specification G-2.

Unless otherwise indicated, the design and construction of the Shield Building was based upon the appropriate sections of the following codes, standards, and specifications.

Modifications to these codes, standards, and specifications are made where necessary to meet the specific requirements of the structures. Where date of edition, copyright, or addendum is specified, earlier versions of the listed documents were not used. In some instances, later revisions of the listed documents were used where design safety was not compromised.

1. American Concrete Institute (ACI)

ACI 214-77	Recommended Practice for Evaluation of Strength Results of Concrete
ACI 315-65	Manual of Standard Practice for Detailing Reinforced Concrete Structures
ACI 318-63	Building Code Requirements for Reinforced Concrete
ACI 318-71	Building Code Requirements for Reinforced Concrete
ACI 318-77	Building Code Requirements for Reinforced Concrete
ACI 347-68	Recommended Practice for Concrete Formwork
ACI 305-72	Recommended Practice for Hot Weather Concreting
ACI 211.1-70	Recommended Practice for Selecting Proportions for Normal Weight Concrete
ACI 304-73	Recommended Practice for Measuring, Mixing, Transporting, and Placing Concrete

2. American Institute of Steel Construction (AISC):

   “Specification for the Design, Fabrication, and Erection of Structural Steel for Buildings,” adopted February 12, 1969.

3. American Society for Testing and Materials, 1971 ASTM Standards. Specific standards are identified in Subsection 3.8.1.6.

4. American Welding Society (AWS):

   “Code for Welding in Building Construction,” AWS D1.0-69 as modified by TVA General Construction Specification G-29C.

   “Structural Welding Code,” AWS D1.1-72 as modified by TVA General Construction Specification G-29C.

   “Recommended Practice for Welding Reinforcing Steel, Metal Inserts, and Connections in Reinforced Concrete Connections,” AWS D12.1-61.

5. Uniform Building Code, International Conference of Building Officials, Los Angeles, 1970 edition.

6. Southern Standard Building Code, 1969 edition, 1971 revision.

7. “Nuclear Reactors and Earthquakes,” USAEC Report TID-7024, August 1963.

8. American Society of Civil Engineers (ASCE) Transactions, Paper Number 3269, “Wind Forces on Structures,” 1961.

9. Code of Federal Regulations, Title 29, Chapter XVII, Part 1910, “Occupational Safety and Health Standards.”

10. NRC Regulatory Guides:

    Number 1.12 Instrumentation for Earthquakes

    Number 1.31 Control of Stainless Steel Welding

11. TVA Construction Specifications:

    G-2 - TVA General Construction Specification for Plain and Reinforced Concrete.

    G-29 - TVA General Construction Specification - Process Specification for Welding and Heat Treatment.

    G-30 - TVA General Construction Specification - Fly Ash for Use as an Admixture in Concrete.

    G-32 - TVA General Construction Specification - Bolt Anchors Set in Hardened Concrete.

    G-34 - TVA General Construction Specification - Repair of Concrete.

12. TVA Reports

    CEB 86-12 - Study of Log-Term Concrete Strength at Sequoyah and Watts Bar Nuclear Plant.

    CEB 86-19-C - Concrete Quality Evaluation.

3.8.1.3 Loads and Loading Combinations

The Shield Building dome and cylinder wall are subjected to the following loads:

Dead Load

This includes weight of the concrete structure plus any other permanent load contributing to stress, such as equipment, piping, and cable trays suspended from the structure.

Earth Pressure

The static soil pressure was computed using TVA General Earth Pressure Design Standards incorporating Coulomb’s “Wedge of Pressure” theory. Standard soil properties for fine grained rolled fill are as follows:

Angle of internal friction = 32°

Angle of friction between soil and building	= 16°
Dry weight	= 120 lb/ft^3
Buoyant weight	= 65 lb/ft^3

Due to adjacent structures the soil does not completely surround the Shield Building but lies in a 185.5° segment around it. The soil was backfilled to a height of 29 feet above the base slab. A surcharge of 200 lb/ft^2 was used.

Hydrostatic Pressure

Uplift forces and lateral static pressure were computed using the full hydrostatic head measured from the water surface. The following water surface elevations were used in determining hydrostatic heads:

Design flood (flood of record)	= Elevation 687.0
Maximum probable flood	= Elevation 700.0
Probable maximum flood with wave runup (PMF)	= Elevation 726.8

(The PMF included the complete loss of the nearest upstream dam [Watts Bar] and 4.2 feet of wave runup. The 1998 reanalysis determined that the new PMF with wave runup is EL. 723.8. See Section 2.4.3. This reanalysis does not include the complete loss of Watts Bar Dam). Due to water seals between the Shield Building and adjacent structures, the lateral hydrostatic pressure was applied only to one-half of the circumference for the design flood and maximum probable flood.

For the PMF the adjacent structures are allowed to flood, and lateral hydrostatic pressure was applied around the full circumference.

Loss-of-Coolant Accident (LOCA)

In addition to the reactions of the containment vessel and interior concrete due to the LOCA pressure transients, the LOCA will produce uplift forces (2400 kips) on the steam generator or reactor coolant pump anchors in the base slab. The LOCA also increases the temperature in the annulus space between the containment vessel and the Shield Building. This produces a non-linear temperature gradient across the cylinder wall and dome. A typical gradient is shown in Figure 3.8.1-1. The base slab design and analysis also took into consideration the flooded conditions and high temperatures inside containment associated with long-term LOCA effects.

Normal Temperature Gradient

The temperature gradient for normal plant operation was considered as uniformly varying through the section. The maximum temperature gradient occurs just above grade when the plant is in operation and a minimum ambient temperature exists. In this case, the maximum normal temperature difference across the wall is 85°F and is shown on Figure 3.8.1-1. The minimum normal temperature difference is 35°F and occurs below grade.

One-Half Safe Shutdown Earthquake (1/2 SSE)

The plant was designed to remain operational for a 1/2 SSE. The 1/2 SSE has a maximum acceleration of 0.09g horizontally and 0.06g vertically. In addition to the maximum values of the structural response in terms of displacement, acceleration, shear, moment, torque and axial force, the soil pressure and hydrostatic pressures were increased due to seismic motions. The static soil pressure was increased 23 percent for a dry fill and 11 percent for a saturated fill. This incremental increase was a triangle of pressure with the apex at the rock surface and the maximum ordinate at the ground surface. The hydrostatic pressure of the water within the fill was increased by 11 percent. This incremental increase was a triangle of pressure with the apex at the water surface and maximum ordinate at the rock surface. The magnitude of these increases were determined by shaking table experiments performed for another TVA project.

Safe Shutdown Earthquake (SSE)

The plant was designed to have the capability for safe shutdown for the SSE (maximum acceleration of 0.18g horizontally and 0.12g vertically). The incremental pressure increase for soil and hydrostatic pressure was twice that for the 1/2 SSE.

Snow

The roofs of the structures are designed for snow load of 20 lb/ft^2 and for live loads ranging from 50 lb/ft^2 to 100 lb/ft^2.

Using the density of water as 62.5 lb/ft^3, a minimum live load of 50 lb/ft^2 and normal stress levels the structural roofs can retain is 10.7 inches of water. For severe environmental conditions or conditions which would block both the Roof Drain System and the scuppers, an increase in the allowable stresses is justified. Using the minimum live load of 50 lb/ft^2 and allowing an increase in the working stress of the reinforcing steel from 0.4 yield to 0.9 yield, the following table indicates the equivalent water depth that the roof structures can retain.

Slab Thickness	Dead Load	Live Load	Load .4fy	Total Load .9fy	Total Overload	Equivalent Water Load
(Inches)	(lb/ft^2)	(lb/ft^2)	(lb/ft^2)	(lb/ft^2)	(lb/ft^2)	(Inches)
6	75	50	125	280+	205	39
12	150	50	200	450	300	57
18	225	50	275	620	395	76
24	300	50	350	785+	485	93

The above table is not a design basis for the roofs of the safety-related structures but is given to indicate the capability of the structures to withstand the equivalent water loads from severe conditions. It is concluded that the roofs of the safety related structures can support not only

normal 100-year recurrence loads but can also support severe environmental loadings or severe loadings due to blockage of both the Roof Drain System and the scuppers.

See Section 2.3 for meteorological information.

Tornado

The tornado was assumed to have an “eye” whose pressure is 3 lb/in^2 below ambient, a “funnel” having a rotational velocity of 300 mph, and a translational speed of 60 mph as described in Section 3.3.2. The Shield Building was designed for wind loads corresponding to 360 mph and a maximum internal pressure of 3 lb/in^2. Maximum wind velocity and maximum internal pressure loadings do not coincide. Coincident wind velocities and pressure drops from the design tornado are shown in Figure 3.3.2-1. The ultimate capacity of the structure in flexure or shear is not exceeded in the zones of maximum stress under the combined pressure and wind velocity loadings of Figure 3.3.2-1.

The adjacent structures so disturb the flow that the only method to determine the actual pressure distribution on the structure is by a model test. In lieu of model test, several cases of extreme pressure distributions were analyzed in an attempt to bracket the actual stresses. The wind load was based on Figure 1(b), ASCE Paper 3269, Wind Forces on Structures, as described in Section 3.3.2. The tornado missiles are described in Section 3.5.

Vacuum Relief

The Vacuum Relief System equalizes containment and annulus atmospheric air pressure. It was necessary that the pressure be equalized between the containment vessel and annulus atmosphere to ensure that the containment vessel external design pressure is not exceeded. This system required that the Shield Building be designed for a 2.0 lb/in^2 external pressure.

Construction Loads

The dome was poured in two lifts. The first lift was a 9-inch pour supported by shoring from the containment vessel. The first lift was designed to support the wet concrete dead load of the second lift plus a construction load of 50 lb/ft^2.

Design loading combinations are shown in Tables 3.8.1-1 and 3.8.1-2.

3.8.1.4 Design and Analysis Procedures

Base Slab

The base slab was analyzed as a slab on an elastic foundation (considering the properties of the rock). The slab was divided into wedge-shaped radial strips. For unsymmetrical loading, the deflections of adjacent wedges were imposed upon circumferential strips. The analysis was made using computer code, “Finite Element Stress Analysis (AMG033).” The base slab is further discussed in Section 3.8.5.

Cylinder Wall and Dome

The stiffness of the cylinder wall is small in comparison to that of the base slab and the cylinder wall was assumed fixed at the base. The height of the wall was such that the effect of discontinuity at one end was negligible when considering discontinuity at the other end.

For symmetrical loadings, the edge forces at the points of discontinuity were determined by writing the equations of the Primary System and the equations of compatibility. The discontinuity stresses from the edge forces were superimposed on the membrane stresses. The above analysis was checked by two independent computer analyses ("Axisymmetric Finite Element Analysis, AMG032" and GENSHL 2). Unsymmetrical loadings, such as wind, were analyzed by using computer code, GENSHL. These loads were approximated through a Fourier series.

Creep and Shrinkage Effects

Creep was not considered in the design of the Shield Building. Sustained loads are essentially the dead weight loads of the structure itself with subsequent stress levels too low to influence creep deformations to any significant degree particularly since these deformations do not cause differential settlements in the structure.

Shrinkage effects are considered in the design of all structures by estimating the temperature change from peak hydration temperatures to final operating temperature conditions. In addition drying shrinkage effects are considered in all members which have an average drying path of less than 15 inches. The methods used to consider these effects are explained in an ACI Committee 207 report, "Effect of Restraint, Volume Change, and Reinforcement on Cracking of Massive Concrete" published in the July 1973 issue of the ACI Journal.

The effects of base restraint on the cracking of a circular structure is essentially the same as the effects on a wall of equal thickness whose length is equal to the outside diameter of the circular structure. For circular structures the total shrinkage reinforcement requirement is proportioned to each face in proportion to the respective radial dimensions.

The Shield Building was not only designed to restrict shrinkage cracking to a minimum acceptable size, but was waterproofed on the exterior portion below grade to eliminate possible seepage. The portion above grade is essentially out of the restraint zone and should therefore be relatively free from shrinkage cracking.

Tangential Shear

The tangential and longitudinal shears induced by earthquake and wind forces were assumed to vary from zero over a thickness of wall located at the extremes of a diameter normal to the neutral axis to a maximum on a wall thickness located at the extremes of a diameter parallel to the neutral axis. Distribution was assumed proportional to the cosine of the polar angle measured from the parallel to the neutral axis with a maximum allowable shear stress in the concrete limited to 275 lb/in^2 as recommended by the SEAOC Code.

Seismic

The seismic response of the Shield Building was based upon idealized models and computer use of the time-history method using four artificial earthquake records. The response was computed for each record and then averaged by computing the arithmetic mean of the four sets of the response values.

The dynamic analysis was done by the normal mode method. This consists of writing the equations of motion of the system, assuming a separable SQN solution and solving the resulting space-dependent and time-dependent differential equations.

The structural response was calculated for both the 1/2 SSE and the SSE. Damping values of 2 percent and 5 percent for the 1/2 SSE and SSE, respectively, were used. See Section 3.7 for a detailed description of the seismic analysis.

Equipment Hatch Doors and Sleeves

For the closed position, the structural members of the door leaves were designed as simple beams under uniformly distributed loading with the end reactions carried by the sleeve. Loads at the dogging wedges were carried to the sleeve as concentrated loads.

For the open position, the door leaves were treated as cantilever structures, and the hinge members and sleeve were designed for the resulting concentrated loads.

Under normal operating conditions, no air pressure is exerted on the doors. Under accident or tornado conditions, the doors are subjected to air pressure. Environmental and accident conditions which were considered in the design of the doors and sleeves are as follows:

1. 1/2 SSE and SSE with accelerations as hereinafter defined.

2. Because of the vacuum relief system, an inadvertent release of the cooling sprays in the containment vessel will cause a pressure drop within the annulus surrounding it and result in an air pressure load of 2 lb/in^2 on the Auxiliary Building side of the doors and sleeves. Duration of this condition will be for a few hours maximum.

3. A tornado condition which causes a pressure drop within the Auxiliary Building will result in a pressure of 3 lb/in^2 on the annulus side of the doors. Duration will be for seconds only.

4. A LOCA in the containment vessel which will result in a pressure equal to ¾ inch of water on the Auxiliary Building side of the doors. A partial vacuum is created in the annulus by vacuum pumps, and this condition may exist for a period of several months.

Earthquake accelerations used in design of the doors and sleeves were determined by dynamic analysis of the supporting structure of the Shield Building. Accelerations at the centerline of the equipment hatch for ½ SSE are as follows:

Lateral (north-south)	0.175 g
Lateral (east-west)	0.175 g
Vertical	0.060 g

Accelerations at the centerline of equipment hatch for a SSE are as follows:

Lateral (north-south)	0.255 g
Lateral (east-west)	0.255 g
Vertical	0.120 g

These accelerations were used as static loads for determining component and member sizes. After establishing the component and member sizes, a dynamic analysis, using appropriate response spectrum, was made of each sleeve and its doors to determine that allowable stresses had not been exceeded.

3.8.1.5 Structural Acceptance Criteria

Controlling Conditions[1] - Shield Building Structure

[1]The principal stresses resulting from GENSHL analysis of wind load and pressure inside may result in local tension zones which may govern reinforcement requirements.

The SSE (combination 3 from Table 3.8.1-1) produced the largest overturning moment. For this combination the percent of base in compression was 71 and the factor of safety for overturning was 2.1.

The uplift on the equipment from the LOCA combined with the 1/2 SSE controlled the design of the base slab.

Minimum bending steel requirements of 0.65 square inches per foot (minimum steel ratio of 0.0015 in each face in both vertical and horizontal directions) controlled the inside face vertical steel requirements throughout the shell the outside face vertical steel requirements above grade, and the inside and outside face horizontal steel requirements above grade to Elevations 819.0 and 813.0, respectively.

The 1/2 SSE (load combination 2) controlled the design of the vertical reinforcement at the base of the cylinder wall. Due to earth and hydrostatic pressure horizontal reinforcement requirements were greatest 14 feet above the base of the cylinder wall at Elevation 690.

Load combinations 1 and 4 (see Table 3.8.1-1) controlled the reinforcement design in the dome and the upper portion of the cylinder wall.

Controlling design stresses are presented as a percent of the allowable stress in the following table. Those stresses which are the highest percent of allowable stresses are assumed to control. Design stresses less than 50 percent of allowable are not given. This table is based upon original design calculations and does not reflect later calculations. These later calculations were due to changes in loading concrete strength evaluations, or modifications, and are documents in calculation packages.

Table of Controlling Stresses in Percent of Allowable Stress

Location	fc Vertical	fc Horizontal	fs Vertical	fs Horizontal
Base of Wall	90.0	---	95	---
Elevation 690	88	---	56	87.5
Elevation 722	55	---	--	67.5
Elevation 790	55	---	--	71.5
Ring Beam	--	---	61	95
	Meridional		Meridional	
Dome	80.5		84.5	
	Hoop		Hoop	
	----		80.5	

The peak hydration temperature in the Shield Building from which subsequent temperature gradients were considered was 100°F ± 5°F. The zone of restraint essentially responsible for induced shrinkage stress is principally below grade. Under DBA (LOCA) thermal gradients the average temperature of the wall below grade approaches the hydration temperature and therefore shrinkage stresses are relieved for all practical purposes such that shrinkage stresses remain only under normal operating thermal gradients which produce an average wall temperature of 67.5°. From this the net temperature drop for shrinkage stresses is approximately 33°F. Under these conditions the controlling stress in the steel at the most critical location (Elevation 690) is 92 percent of allowable.

The SSE produced a maximum shear stress at the base of the wall of 156 lb/in^2 which was 57 percent of the allowable. Investigation of principal stresses resulting from combined shear, radial, and meridional stress was not considered necessary because of the low allowable shear stresses and with more than 70 percent of the base in compression under these conditions, a cursory investigation indicates that principal tensile stresses would be considerably less than the allowable concrete stress in shear.

The effects of repeated reactor shutdowns and startups during the plant's life will not degrade the above margins of safety because the Shield Building is minimally affected by these operations except for interior temperature changes which are insignificant compared to normal exterior temperature variations.

Equipment Hatch Doors and Sleeves

Allowable stresses for all load combinations used for the various parts are given in Table 3.8.1-2. For normal load conditions, the allowable stresses provide safety factors of 2 to 1 on yield for structural parts and 5 to 1 on ultimate for mechanical parts. For limiting conditions such as a SSE, stresses do not exceed 0.9 yield.

3.8.1.6 Materials, Quality Control and Special Construction Techniques

3.8.1.6.1 Materials

General

Basically the two materials used in the construction of the Shield Building wall and dome were concrete and reinforcing steel. Steel was used for the structural parts of the equipment hatch doors and sleeves and rubber was used for the seals.

Concrete

Concrete mix design, placing, inspection, and testing were in accordance with TVA General Construction Specification No. G-2. Concrete work was done in accordance with ACI 318-63 “Building Code Requirements for Reinforced Concrete,” and TVA General Construction Specification No. G-2 for Plain and Reinforced Concrete. Admixtures were added to improve the quality and workability of the concrete during placement and to retard the set of the concrete. Maximum practical size aggregate and a low slump were used to minimize shrinkage and creep. All concrete materials were sampled and tested by TVA throughout the job for compliance with material specification requirements. The specified minimum compressive strength of concrete was 4000 lb/in^2. Some concrete did not meet specification requirements. This was evaluated in exhibit F of Report CEB-86-19C “Concrete Quality Evaluation” and the results documented in affected calculation packages and drawings.

Cement conformed to ASTM Specification C150-72, Type II.

Aggregates conformed to ASTM Specification C-33, “Standard Specifications for Concrete Aggregates.” Aggregates consisted of crushed stone and manufactured sand made from rock quarried from a high grade dolomite or limestone formation approved by TVA.

Water for mixing concrete and also for washing the aggregates and curing concrete was tested prior to use in accordance with Corps of Engineers test method CRD-C400. Retesting was done any time contamination of the source of supply was suspected. The quantities of fly ash and cement used were determined by making tests of trial mixes. The mix with the fly ash to cement ratio that consistently yielded the specified concrete strength and provided maximum workability was used. Fly ash conformed to TVA General Construction Specification No. G-30 for Fly Ash for Use as an Admixture in Concrete.

Air-entraining admixtures conformed to ASTM Specification C-260-69. Water-reducing agents conformed to TVA Specification for Water-Reducing Agent for Concrete for Sequoyah Nuclear Plant.

Batching, mixing and delivery equipment, including their operation, conformed to ASTM Specification C94-72 for central-mixed concrete.

During the Unit 1 steam generator replacement, concrete used for the restoration of the shield building dome construction openings was provided in accordance with Specification 24370-C-321. The concrete was designed to achieve a minimum strength of 4000 psi at seven days.

During the Unit 2 steam generator replacement, concrete used for the restoration of the shield building dome construction openings was provided in accordance with Specification 39866-SPEC-C-004. The concrete was designed to achieve a minimum strength of 4000 psi at seven days.

Reinforcing Steel

Reinforcing steel was deformed billet steel bars conforming to ASTM Designation A 615, Grade 60.

For the Unit 1 and Unit 2 steam generator replacement, reinforcing steel used in the restoration of the shield building construction openings conforms to ASTM A 615, Grade 60.

Bar-Lock Couplers

During the Unit 1 and Unit 2 steam generator replacement, Bar-Lock couplers were used to splice the new reinforcing bar to the existing reinforcing bar during the restoration of the shield building construction openings. Bar-Lock couplers are manufactured of seamless hot-rolled steel tube conforming to ASTM A-519 specification, with minimum tensile strength exceeding 100,000 psi.

Equipment Hatch Sleeves and Doors

The structural parts of the sleeves and doors are fabricated from ASTM A 36 steel.

3.8.1.6.2 Quality Control

General

The Sequoyah Quality Assurance Manual contains those procedures to be followed which provide assurance that the Shield Building is built to the desired quality level. The following is a general description of Quality Assurance Requirements required by the Quality Assurance Manual.

Concrete

The quality control and inspection procedures for concrete are detailed in TVA's General Construction Specification G-2 for Plain and Reinforced Concrete.

In general all concrete materials are purchased to standard ASTM specifications and tested by TVA laboratories for compliance.

The quality of all concrete materials are periodically checked by TVA laboratories during the progress of construction to assure continued compliance with the specifications.

TVA employed a materials engineer on each project, who was specifically responsible for maintaining quality control of all concrete.

The slip-form construction of the walls of the Shield Building was a continuous placing operation 24 hours a day. Samples for compression testing were taken at approximately 6-hour intervals such that each sample represented approximately 170 yd^3 of concrete.

Each sample was tested for slump, air content, unit weight, and compressive strength.

Quality control charts were required for each class of concrete poured, with limitations on air content, slump, and percent of strengths allowed to fall below the required strength for each concrete class.

Deviations from the requirements of TVA General Construction Specification, G-2, occurred in two areas with respect to the concrete for the Shield Buildings; (1) Modified slump requirements were provided to facilitate concrete placement, and (2) the concrete for the Unit 2 Shield Building deviated from the strength requirements of G-2.

Concrete with a slump greater than that specified for the design mix was required in order to discharge from the concrete buckets used for the slip-forming operation. The average slump was 4 inches with slumps generally ranging from 3 to 5 inches. The design mix was adjusted to compensate for the higher slump.

The concrete mix for the Unit 2 Shield Building used a different source of aggregate due to a strike at the original supplier's quarry. The mix adjustments for the change in aggregate were not fully adequate and the percent of tests less than the specified strength of 4000 psi exceeded the G-2 requirement of 10 percent at the specified age of 28 days. However, the long-term inplace strength exceeded the required strength. Also, the 90-day compressive strength based on standard cured cylinders indicated a design strength greater than 4000 psi.

Reinforcing Steel

The reinforcing steel supplier was required to submit certified mill test reports for chemical and physical properties as required by ASTM A 615-68.

TVA witnessed random mill tests on the physical properties of reinforcing steel prior to shipment. This inspection was conducted by the Inspection and Testing Branch of TVA.

Equipment Hatch Doors and Sleeves

Design by TVA and erection by TVA were in accordance with TVA's Quality Assurance Program. Design and fabrication by the Contractor were in accordance with the Contractor's Quality Assurance Program which was reviewed and approved by TVA's design engineers. The Contractor's Quality Assurance Program conformed to the criteria in Appendix B of 10 CFR 50. Fabrication procedures such as welding and nondestructive testing were included in appendixes to the Contractor's Quality Assurance Program. ASTM standards were used for all material specifications and certified mill test reports were provided by the Contractor for materials used for all load carrying members.

Material used for seals, including 0-rings, was certified by a rubber technologist as being capable of withstanding the radiation and temperature conditions existing during a LOCA.

This certification was based on testing and evaluation of seal materials performed under contract for TVA by Prespray Corporation.

3.8.1.6.3 Construction Techniques

The walls of the Shield Building from the base slab to the bottom of the ring beam were constructed by slip-form methods. The concreting was performed on a 24-hour schedule from bottom to top without stopping. Unit 1 was begun on November 30, 1970, and completed on December 11, 1970. Unit 2 began on March 15, 1971, and was completed March 25, 1971. Concrete temperatures were monitored throughout for a minimum period of 3 days during cold weather to assure satisfaction of cold weather protection requirements.

The dome roof was placed in two lifts, creating a minimum roof thickness of 2 feet, with each lift divided into three basic rings and each ring divided into radial segments. The steel containment vessel was designed to support the form work for the first 9-inch-thick lift and the first lift was then designed to support the remaining 15-inch lift with the form work removed. Delays were specified between adjacent lift pours in order to minimize the effects of initial volume changes. The second lift was not placed until the first lift had attained its specified strength.

The base slab, starter lift on the wall, and ring beam were constructed using conventional methods.

During the Unit 1 steam generator replacement, two construction openings were cut into the dome roof. These construction openings were restored by using permanent steel form plate on the inside face of the roof and placing the concrete in one lift.

3.8.1.7 Testing and Inservice Surveillance Requirements

Since the Shield Building is not a pressure containment its wall and dome will not be pressure tested.

3.8.2 Steel Containment System

3.8.2.1 Description of the Containment

The containment vessel for Sequoyah is a low-leakage, free-standing steel structure consisting of a cylindrical wall, a hemispherical dome, and a bottom liner plate encased in concrete. Figure 3.8.2-1 shows the outline and configuration of the containment vessel.

The structure consists of side walls measuring 113 feet 8-5/8 inches in height from the liner on the base to the spring line of the dome and has an inside diameter of 115 feet. The bottom liner plate is ¼ inch thick, the cylinder varies from 1-3/8 inch thickness at the bottom to 1/2 inch thick at the spring line and the dome varies from 7/16 inch thickness at the spring line to 15/16 inch thickness at the apex.

The containment vessel is provided with both circumferential and vertical stiffeners on the exterior of the shell. These stiffeners are required to satisfy design requirements for expansion and contraction, seismic forces, and pressure transient loads. The circumferential stiffeners were installed on approximately 20-foot centers during erection to insure stability and alignment of the shell. Vertical stiffeners are spaced at 4° arcs. See Section 3.8.2.4.2 for details of the design of the stiffeners. Figure 3.8.2-8 shows the arrangement of circumferential stiffeners.

During the Unit 1 and Unit 2 steam generator replacements, two construction openings were cut into the domes of each unit's steel containment vessel. These construction openings were restored by reinstalling the removed steel sections and rewelding them to the remaining structure using full penetration welds. The integrity of the restored vessel was verified by NDE and leak testing of the welds.

An equipment hatch with an inside diameter of 20 feet has been provided to enable passage of large equipment and components into the containment during plant shutdown.

Two personnel access locks were provided for each containment vessel. Each personnel lock is a welded steel assembly with a door at each end equipped with a double compressible seal to insure leak tightness of the lock. Detailed descriptions of the equipment hatch and personnel locks are presented in Chapter 6.

3.8.2.2 Applicable Codes, Standards, and Specifications

3.8.2.2.1 Codes

The design of the containment vessel meets the requirements of the ASME Code, Section III, Winter Addenda 1968, applicable sections required for a Class B nuclear vessel, including Code cases 1177-5, 1290-1, 1330-1, 1413, 1431. Additional ASME Code, Subsection NE requirements have been added since 1968.

The bottom liner plate along with nonpressure parts, such as walkways, handrail, ladders, etc., were designed in accordance with the American Institute of Steel Construction (AISC) "Specification for the Design, Fabrication, and Erection of Structural Steel for Buildings," February 12, 1969, Part I. Where date of edition, copyright, or addendum is specified, earlier versions of the listed documents were not used. In some instances, later revisions of the listed documents were used where design safety was not compromised.

Nuclear Construction Issues Group documents NCIG-01, Revision 2, may be used after June 26, 1985, to evaluate welds in these items. When invoked, NCIG provisions will be implemented as indicated in section 3.6.8.

3.8.2.2.2 Design Specification Summary

The containment vessel, including access openings, penetrations, and vacuum relief systems, is designed so that the leakage of radioactive materials from the containment structure under conditions of pressure and temperature resulting from the largest credible energy release following a LOCA (DBA), including the calculated energy from metal-water or other chemical reactions that could occur as a consequence of failure of any single active component in the Emergency Cooling System, will not result in undue risk to the health and safety of the public, and is designed to limit to below 10 CFR 100 values, the leakage or radioactive fission products from the containment under such (DBA) conditions.

The basic structural elements considered in the design are the vertical cylinder and dome acting as one structure, and the bottom liner plate. The bottom liner plate is encased in concrete and is designed as a leak tight membrane only. The liner plate is anchored to the concrete by welding it continuously to steel members embedded in and anchored into the concrete base mat.

The containment shell is provided with circular inspection platforms on the exterior of the shell at approximately 20-foot centers which also are designed as permanent circumferential stiffeners. Additional circumferential stiffeners are provided at personnel and equipment hatches and other large attached masses along with vertical stiffeners for some distance above and below these attachments. Still additional permanent circumferential and vertical stiffeners are required for stability as discussed in Section 3.8.2.4.2. Temporary stiffening to meet tolerance requirements specified by TVA was not required in the erection of the vessel. The design provides for movements of the vessel and supports due to expansion and contraction, pressure transient loads, and seismic motion. No allowance is made for corrosion in determining the material thickness of the vessel shell.

The following pressures and temperatures were used in the design of the vessel:

Overpressure test (1)	13.5 lb/in^2g
Maximum internal pressure (2) (3) (4)	12.0 lb/in^2g at 220°F
Design internal pressure (2) (4)	10.8 lb/in^2g at 220°F
Leakage rate test pressure	12.0 lb/in^2g
Design external pressure	0.5 lb/in^2g
Lowest service metal temperature	30°F
Operating ambient temperature	120°F
Operating internal temperature	120°F

In addition, the evaluations of the vessel design have considered a harsh environment temperature of 327°F. (5)

(1) 1.25 Times design internal pressure as required by ASME Code, UG-100(b).

(2) See Paragraph N-1312(2) of Section III of the ASME Code which states that the “design internal pressure” of the vessel may differ from the “maximum containment pressure” but in no case shall the design internal pressure be less than 90 percent of the maximum containment internal pressure.

(3) Typical pressure transient curves are presented in Chapter 6. These curves show the transient pressure buildup in the compartments after a LOCA (DBA) before a steady-state pressure of 12.0 lb/in^2g is reached.

(4) Shell temperature transient curves are presented in Appendix 3.8A. These curves show the shell temperature at the lower compartment wall, upper compartment wall, and ice condenser wall. The maximum containment wall temperature is 220°F.

(5) A postulated main stream line break (MSLB) results in high environmental temperatures (327°F maximum) inside the lower compartment of the steel containment vessel. However, the coincident internal pressure is lower (reference 10).

In order to ensure the integrity of the containment, an analysis of the missile and jet forces due to pipe rupture was considered. This problem was addressed by providing barriers to protect the containment vessel. Typical barriers are the main operating floor (Elevation 733.63) and the crane support wall. An example of a special barrier is the guard pipe enclosing the main steam and feedwater pipes between the Shield Building and the crane wall.

Allowable Stress Criteria

Allowable stress criteria for the containment vessel is shown in Table 3.8.2-1. The response of the containment vessel to seismic and pressure transient loadings result in a condition in which buckling of the steel shell may occur. Since the ASME Code does not define the allowable buckling stresses for this type of loading condition, an acceptable buckling criteria with appropriate factors of safety had to be developed. A search of the literature revealed that for the most part stability studies have been limited to shells under symmetrical static loads whereas the design load conditions are asymmetrical dynamic loads. Information which takes into account factors such as the effects of boundary conditions, initial imperfections, and local buckling that greatly affect the stability are primarily based upon experimental studies. The state-of-the-art for the stability analysis and design of shell is semiemperical relations, based largely upon data from static, symmetrically loaded model tests. That was the basis for the initial buckling stress criteria which TVA developed. Later, the pressure transient loadings were revised and increased to the extent that the initial buckling stress criteria proved to be too conservative. An inefficient design for the containment vessel would have resulted if an alternate buckling stress criteria was not developed.

Therefore, TVA and CB&I contracted with Anamet Laboratories to perform a dynamic stability analysis of the containment vessel. Details of this dynamic analysis are provided in Reference 8.

Materials - General

Materials for the containment vessels, including equipment access hatches, personnel access locks, penetrations, attachments, and appurtenances meet the requirements of the following specifications of the issue in effect on the date of invitation for bids. Impact test requirements were as specified in the ASME Boiler and Pressure Vessel Code, Section III for maximum test metal temperature of 0°F. Charpy V-notch specimens, SA 370, type A, were used for impact testing materials of all product forms in accordance with the requirements of the ASME Boiler and Pressure Vessel Code, Section III. In order to provide for loss of impact properties during fabrication, all materials were furnished with an adequate test temperature margin below the minimum NDT temperature; otherwise, the specified minimum values were effectively restored by heat treatment in accordance with ASME Code requirements.

Material Designations

Plate for vessels:

Carbon steel	ASTM A 516, Grade 60, carbon steel plates for pressure vessels for moderate and lower temperature service. ASTM A 516, Grade 70 carbon steel plates for pressure vessels for moderate and low temperature service.

Material Designations

Austenitic stainless steel	ASTM A 240, Type 304.
Forgings:	
Carbon steel	ASTM A 350, Grade LF1 and LF2 for welding.
Austenitic stainless steel	ASTM A 182, Grade F304.
Pipe:	
Carbon steel	ASTM A 333, Grade 1, seamless.
	ASTM A 333, Grade 6, seamless.
Austenitic stainless steel	ASTM A 312, Grade TP 316, seamless, or ASTM A 358, Class 1, Grade 316.
Castings:	
Carbon steel	ASTM A 216, Grade WCB, or ASTM A 352, Grade LCB.
Carbon steel (for lock and hatch mechanisms)	ASTM A 27, Grades 70-36.
Cold finished steel (for lock and hatch mechanisms)	ASTM A 108, Grades 1018 to 1050 inclusive.
Bar and machine steel (for lock and hatch mechanisms)	ASTM A 107, special quality, carbon content not less than 0.30 percent
Fasteners:	
Carbon steel	ASTM A 320, Grade L7 or ASTM A 193,Grade B7
Austenitic stainless steel	ASTM A 193, Grade B8
Welding electrodes:	
Carbon steel	SFA-5.1, E70 Classification.
Austenitic stainless steel	SFA-5.4, E308 or E309 Classification;
	SFA-5.9, ER308 or ER309 Classification.

Structural steel:

Plates, bars, shapes (other than vessel plates)	ASTM A 36.
Threaded stud anchors	ASTM A 108.

Gasketing materials, including 0-ring seals, are of ethylene-propylene-dienemonomer (EPDM) material or other suitable elastomers in continuous rings and with a Shore A durometer hardness of 40-60. Seals and gasket material are required to withstand radiation of 10^6 rads.

Corrosion Protection

Potential corrosion of the steel containment has been considered at both the embedded bottom liner in conjunction with the concrete, at the inner face in the region of the ice condenser, and at the outer face exposed to the annulus atmosphere.

The conditions which determine corrosion are basically the electro-potential of the materials involved, the presence of oxygen and an electrolyte, temperature and any induced electro-potential from extraneous sources. These have been evaluated in the determination of corrosion.

The containment material is specification ASTM A 516, Grade 60 being a 1 percent manganese 0.3 percent silicon low carbon steel, and has interfaces with concrete. Thus no unfavorable electro-potentials exist in the materials.

The climatic conditions for Chattanooga, Tennessee, show an ambient annual temperature range of 0°F to 100°F (Reference 1). The corresponding temperature range for the steel containment in the region of the ice condenser is approximately 32°F to 120°F.

The corrosion of the steel containment face in contact with the containment concrete is not a design consideration since portland cement concrete provides good protection to embedded steel. The protective value of the concrete is ascribed to its alkalinity and relatively high electrical resistivity in atmospheric exposure.

ACI Committee 201 Report “Durability of Concrete in Service” identifies three basic conditions as being conducive to the corrosion of steel in concrete (Reference 2).

1. The presence of cracks extending from the exposed surface of the concrete to the steel.
2. Corrosion cells arising from electro-potential differences in the concrete itself.
3. Electrolysis by induced currents in the concrete or steel.

With respect to condition (1) the base consists of a 2-foot-thick concrete embedment surrounding all the steel containment. The cracking under the worst of cases is considered minimal. This quantity far surpasses minimum cover recommended by ACI 201-1 in the most corrosive marine environment.

The potential for developing corrosion cells was kept to a minimum by limiting the soluble salts and chlorides in the concrete. Further, the continuing corrosion of iron under these conditions requires that the hydrogen deposited at the cathode is freed or combined with oxygen.

Since both these mechanisms are prevented by the concrete, the corrosion cells are polarized, and the reaction is brought to a standstill.

To preclude the development of induced electric currents and in keeping with good construction practice, all electrical equipment and structures are grounded as determined by the resistivity of the foundation materials for the site. Foundation material resistivity surveys were made and the result considered in the design and determination of the extent of the grounding mat.

The seasonal variation of steel containment temperature in the region of the ice condenser gives rise to a range of relative humidity from 4 percent at 120°F to 45 percent at 32°F. This is based on saturated air leaking from the cooling ducts at a temperature of 10°F and rising to the steel containment temperature at the containment surface.

The annular region exterior to the steel containment is essentially airtight. Only during periods of shutdown during which access doors are open will this seal be broken. In the event of a pipe rupture in the annular region, water would be removed by a drainage system at the base of the annulus.

Any ingress of moisture to the interior steel containment face is prevented by sealing the outer periphery of the ice condenser adjacent to the steel containment, and by the vapor barrier on the inside face of the duct panels at the boundary of the ice bed. In the event of any abnormal ingress of moisture through the seal, the leakage air from the cooling ducts has the capacity to absorb moisture up to the limits of the relative humidities quoted above. In addition, any moisture remaining will have a tendency to migrate to the colder end of the temperature gradient; i.e., for all steel containment temperatures above 10°F, moisture will migrate towards the cooling air ducts, where it will be evaporated as the cooling air increases in temperature in the course of its passage through the ducts.

For steel containment temperatures below 32°F any moisture at the steel containment face will be frozen, this condition pertaining to relative humidities greater than 45 percent, and steel containment temperatures below 10°F when the migration of moisture could take place from the air cooling ducts to the steel containment.

In the event of actuation of the containment spray, water would be applied to the interior surface of the steel containment. Most of the water would be removed by the Drainage System and the small amount of moisture remaining would be removed from the steel containment surface by evaporation.

Several references have been established which give corrosion data for the limits of conditions described above.

For low alloy steels in any industrial atmosphere long-term tests indicate a maximum total corrosion of 0.016 inch in 40 years (based on 14g/aq dm in 18 years - Reference 3).

For dry inland conditions which more closely simulate the steel containment conditions the total corrosion for the plant lifetime is approximately 0.010 inch (References 4 and 5). This is accounted for by the fact that below relative humidities of 65 percent, iron oxide itself forms an adherent film, affording good protection to further corrosion (Reference 6). Furthermore, at temperatures below freezing, ion transport in the electrolyte is almost entirely inhibited, obviating the mechanisms of corrosion. This is supported by data for corrosion from Normal Wells - latitude 65°N, where the prolonged winter temperatures and lower annual average reduce the corrosion rate by a factor of 50 as compared with Penn State (Reference 7), which is applicable to Sequoyah Nuclear Plant.

It is concluded that the maximum total corrosion for any exposed internal surface of the steel containment in the region of the ice condenser is 0.010 to 0.015 inch over the lifetime of the plant. In general, the corrosion in the region of the ice condenser is expected to be less than in other areas of the containment, which can be readily inspected.

Protective Coatings

Protective coatings were applied to all exposed steel surfaces of the containment vessel. Surfaces embedded in concrete were not coated. Coating systems used on the inside of the containment vessel were selected on the basis of their ability to withstand not only normal operating conditions but DBA conditions as well. The coating must be able to withstand a DBA without being removed from the surface, so that it will not interfere with emergency pumping and spraying systems. The coating systems were subjected to tests designed to determine their radiation resistance, decontaminability, resistance to decontamination chemicals, and resistance to accident conditions. The accident conditions tests include exposure to steam and boric acid spray solutions under temperature-time conditions which are more severe than those that would be encountered in a DBA.

All exterior vessel shell surfaces and metal surfaces of platforms, floor plate, ladders, walkways, attachments, and accessories located in the annular space surrounding the containment vessel were cleaned in accordance with the requirements of Steel Structures Painting Council Surface Preparation Specification No. 6, Commercial Blast Cleaning, latest edition. After cleaning and having passed inspection, one complete prime shop coat of red lead oil paint (dry film thickness not less than 1-1/2 mils) was applied in accordance with Federal Specification TT-P-86e, Type II.

All interior surfaces of the containment vessel shells and metal surfaces of attachments thereto, except those parts embedded in the base slab and identified as the liner and areas within 2 inches of field-welded joints, were given one prime coat of Carboline, Carbozinc 11 within 8 hours after blast cleaning as described above. The primer was topcoated, as required, by TVA field forces with an epoxy coating.

In order to perform the Unit 1 and Unit 2 Steam Generator Replacements, two construction openings were created in each containment vessel to provide containment access to change out the steam generators. These construction openings were closed by welding the removed sections back in place. The containment vessel interior surface coating was removed adjacent to the welds and has been left uncoated. The uncoated area is monitored for degradation through implementation of Station Engineering Programs.

The surfaces of the vessel in the annular space were coated with materials selected for the ability to provide protection against atmospheric corrosion.

For additional information on protective coatings, refer to Section 6.2.1.6.

Allowable Weld Stresses

Allowable weld stresses for pressure boundary components conform to the requirements of the ASME Code for full penetration welds.

For partial depth groove welds, the allowable stress on the effective depth is:

1. An inspection factor x load factor x Sm of weaker material.
2. The inspection factor used is 0.8.
3. The load factor used is:

   1.0 for load perpendicular to axis of the weld.
   0.875 for any combination of perpendicular and parallel loads.
   0.75 for load parallel to axis of the weld.

For fillet welds the allowable stress is 0.55 Sm on the minimum leg.

Allowable weld stresses for nonpressure boundary components conform to the requirements of the AISC Code, Sections 1.5.3.1 and 1.5.3.2.

Tolerances

The containment vessel as constructed does not exceed the applicable tolerance requirements of the ASME Code for fabrication or erection.

The out-of-roundness tolerance does not exceed 1/2 of 1 percent of the nominal inside diameter.

The deviation from a vertical line of the vertical cylindrical portion adjacent to the ice condensers is limited to + 2 inches for the height of the ice condensers.

Threaded studs for attachment of ice condenser outer duct panels do not vary from their theoretical location by more than + 1/4 inch.

Penetrations do not vary from their theoretical location by more than + 1/2 inch.

3.8.2.2.3 NRC Regulatory Guides

Applicable NRC Regulatory Guides are shown below. These guides were used as the basis for design of a number of safety oriented features.

Regulatory Guide 1.4: Assumptions used for evaluating the potential radiological consequences of a LOCA for pressurized water reactors.

A dynamic analysis of the containment vessel was made for the pressure transient loadings. The containment vessel penetrations were designed to withstand the maximum internal pressure that could occur due to a LOCA and the jet forces associated with the flow from the postulated pipe rupture.

Regulatory Guide 1.28: Quality Assurance Program requirements (design and construction).

A comprehensive Quality Assurance Plan was developed for the design and construction of the Sequoyah Nuclear Plant. The Quality Assurance Plan of the Westinghouse Electric Corporation, the supplier of the Nuclear Steam Supply System, is also contained therein.

The plans were prepared to assure that the control of quality was performed and documented for each phase of material selection, fabrication, installation, and/or erection in accordance with the approved specification and drawings. The plans relate principally to the Reactor Coolant and Safety Systems, the containment and other components necessary for the safety of the nuclear portion of the plant.

The plan assures that:

1. Final design requirements and final detailed designs are in accordance with applicable regulatory requirements and design bases.

2. Components and systems to which this plan applies are identified and that final design takes into account the varying degrees of importance of components and systems as evidenced by the possible safety consequences of malfunction or failure.

3. Purchased material and components fabricated in vendor shops conform to the final design requirements.

4. Components and systems are assembled, constructed, erected, and tested in accordance with final design requirements and to requirements specified in Safety Analysis Reports for the plant.

5. The plant can be operated and maintained in accordance with requirements specified in the Safety Analysis Reports.

3.8.2.3 Loads and Loading Combinations

3.8.2.3.1 Design Loads (Other Than Pressures)

The following loads are used in the design of the containment vessel and appurtenances. See Section 3.8.2.2.2 for pressures.

Dead Loads

These loads consist of the weight of the steel containment vessel, penetration sleeves, equipment and personnel access hatches, and attachments supported by the vessel.

Live Loads

Penetration loads as applicable (including seismic).

Floor load of 100 lb/ft^2 or 1000 pounds concentrated moving loads applied to the passage area of the personnel air locks.

Construction and snow loads at 50 lb/ft^2 but not simultaneously.

Floor load of 50 lb/ft^2 plus 225 pounds per linear foot for walkways.

Thermal Stresses During Accident Condition (DBA)

The containment vessel is designed to contain all the effluent which would be released by a hypothetical LOCA (DBA). This accident assumes a sudden rupture of the Reactor Coolant System which would result in a release of steam and a steam-air mixture in the vessel. It is calculated that this mixture would cause a lower compartment temperature of 220°F and an upper compartment temperature of 140°F both occurring essentially instantaneously. After the accident an Internal Spray System will commence spraying in the upper compartment only. The spray will discharge water on the interior of the upper compartment and then drain to the lower compartment. For shell temperature transients refer to Appendix 3.8A.

Main Steam Line Break (MSLB) produces temperatures in the lower compartment of 327°F with coincident internal pressure and seismic loadings defined in load combinations 3B and 4B. The containment wall temperature is less than this value.

Hydrostatic Loads

The containment vessel is designed for three separate flooded conditions. Hydrostatic load, Case IB, accounts for the flooded condition due to spray water and ice melt from the ice condenser after the DBA. After all the ice has melted the containment will be flooded to elevation 696 feet and 3 inches. Also considered is the loading condition during meltdown (hydrostatic load, Case IA). Water will rise to a depth of 2 feet on the floor of the ice condenser. At this time, the depth of water on the containment cylindrical shell will be 9 feet 3 inches.

Hydrostatic load, Case II, accounts for the post-accident fuel recovery condition. In order to remove fuel from the containment after the DBA, the containment vessel is designed for an internal hydrostatic head of 47 feet 3 inches.

For hydrostatic load cases refer to Figure 3.8.2-1.

Ice Condenser Duct Panel Loads

The outer duct panels of the ice condenser are attached to the containment with threaded studs. These panels impart a small horizontal and vertical force on the containment shell under seismic conditions. The distribution of these loads to the shell is shown in Figure 3.8.2-1.

Equipment Loads

Equipment loads are those specified by manufacturers of the equipment.

Spray Header Loads

The Spray Header Loads used for initial design of the containment vessel are shown in Appendix E of the Tennessee Valley Authority Design Specification SNP-DS-1705-9803-02 (Reference 11).

Seismic Loads

Seismic loads were computed using the following:

1. 1/2 SSE maximum ground accelerations

   horizontal 0.09 g
   vertical 0.06 g

2. SSE maximum ground accelerations

   horizontal 0.18 g
   vertical 0.12 g

Response spectra are shown in Section 2.5.

Classifications of structures and equipment are shown in Section 3.2.1. See Section 3.7 for a detailed description of the seismic analysis. Damping ratios are shown in Section 3.7.1.

Wind Loads

The containment vessel and penetrations associated with primary containment are completely enclosed by the Shield Building, and is therefore not subject to the effects of wind and tornadoes.

However, during construction, the vessel dome is exposed to the elements for a short duration. For this construction condition, a wind load of 30 lb/ft^2 on the projected area of the vessel dome is considered.

Non-Axisymmetric Transient Pressure Loads (NASPL)

The division of the containment into compartments is described in Chapter 6. Figure 3.8.2-2 shows a layout of the containment shell, indicating the various shell areas subjected to the transient pressure loadings.

Pressure transient loads are considered for occurrence of the Design Basis Accident (double-ended rupture of the Reactor Coolant System) in all six lower compartment volumes. The curves presented in Chapter 6 represent the containment pressure transients for break locations one through six respectively. Each set of curves contains 10 plots to present 49 containment elements. The most severe containment pressure differences occur during the first 0.9 second of the blowdown. The pressures and differential pressures shown on these figures have a 20 percent margin added to accommodate tolerances in analytical constants used in the code. The initial containment pressure was assumed to be 0.3 lb/in^{2}g. This allows for an initial containment pressure before containment venting is required.

For structural design purposes the pressures represented by the curves are increased by an additional 10 percent to cover changes in such factors as equipment configuration and openings between compartments which can influence the flow characteristics of the containment space and the effect of moisture entrainment. Curves which include the effects of moisture entrainment have been investigated by TVA and CBI and do not control the design of the containment vessel for any loading condition.

Hydrogen Detonation Loads

The Hydrogen Distributed Ignition System is provided to burn hydrogen in the containment vessel before it reaches an explosive concentration level following a degraded core accident. Such a hydrogen burn can cause pressures which exceed the design pressure of the containment vessel. An evaluation was made of the containment vessel pressure capability under a postulated static internal pressure buildup and a minor local internal hydrogen detonation; not applied concurrently.

The static internal pressure analysis was performed using an elasto-plastic finite element analysis of a 2° segment of the containment vessel between Elevations 778'-6" and 793'-0" using the ANSYS finite element computer program. The model was constructed of STIF-48 plastic triangular elements with circumferential ring and vertical stiffeners modeled discretely, Figure 3.8.2-3. The ANSYS computer program is described in Appendix 3.8D.

The limiting element in the containment shell from the analysis is the 1/2" plate between the circumferential stiffeners at Elevations 778'-6" and 788'-0". The pressure capability corresponding to ASME Boiler and Pressure Vessel Code (1980 Edition), Subsection NE, Criteria, Service Levels A and C are 14.2 lb/in^{2}g and 27.5 lb/in^{2}g, respectively. Furthermore the pressure capacity just prior to the onset of large deflections at small load increments is 50 lb/in^{2}g.

To prove the adequacy of the containment against local hydrogen detonations, a pressure transient analysis was performed using a representative pressure profile and time history curve depicted in Figures 3.8.2-4 and 3.8.2-5. Using the ANSYS finite element computer code, a shell segment was modeled between azimuths 150° and 180° and between Elevations 756'-3" and 810'-3". This model utilized the STIF-43 quadrilateral shell element with the shell plate and stiffeners modeled discretely. The finite element model shown in Figure 3.8.2-6 represents the thinnest segment of the containment vessel. Direct integration of the equations of motion was utilized at a uniform time step of 0.0001 second over a total time duration of 0.10 second. A parametric study was performed to verify the validity of assumed boundary conditions.

The results of this analysis show that the containment has the capability to withstand the local hydrogen detonation considered. The maximum displacement, which occurs in the 1/2 inch plate

is 0.65 inch with the corresponding maximum membrane stress of 15.0 k/in^2. The stress meets Service Level A code allowable stress for SA516 Grade 60 shell plate. The Vacuum Relief System is discussed in section 3.8.1.3.

3.8.2.3.2 Loading Conditions

The following loading conditions are used in the design of the containment vessel:

1. Cold Shutdown Condition

Dead load of containment vessel and appurtenances.
Lateral and vertical load due to 1/2 SSE.
Personnel access lock floor live load.
Walkway live load.
Penetration loads.
Ice condenser duct load.
Thermal load due to temperature range 30°F to 120°F.
Spray Header loads.

2. Normal Operation Condition

Dead load of containment vessel and appurtenances.
Lateral and vertical load due to 1/2 SSE.
Penetration loads.
Spray header loads.
Personnel access lock floor live load.
Ice condenser duct load.
Walkway live load.
Thermal load due to temperature range 53°F to 120°F.

3A. Upset Condition (STATIC)

Dead load of containment vessel and appurtenances.
Structural design internal pressure of 10.8 psig. (90% of maximum P_a)
Lateral and vertical load due to 1/2 SSE.
Penetration loads.
Spray header loads.
Ice condenser duct load.
Thermal load due to temperature range 53°F to 220°F.
Hydrostatic load Case IA or IB (see Figure 3.8.2-1).

3B. Upset Condition (DYNAMIC)

Dead load of containment vessel and appurtenances.
Pressure transient loads (NASPL).
Lateral and vertical load due to 1/2 SSE.
Penetration loads.
Thermal load due to temperature range 53°F to 120°F.
Hydrostatic load Case IA or IB (see Figure 3.8.2-1).
Spray header loads.
Ice condenser duct load.

3C. Upset Condition (MSLB)

Dead load of containment vessel and appurtenances.
Internal pressure coincident with MSLB per reference 10.
Lateral and vertical load due to 1/2 SSE.
Spray header loads.
Ice condenser duct load.
Thermal load due to temperature range 53°F to 273.5°F.
Penetration loads.

4A. Emergency Condition (STATIC)

Loads are same as in condition 3A, except
Lateral and vertical load due to SSE.

4B. Emergency Condition (DYNAMIC)

Loads are same as in condition 3B, except
Lateral and vertical load due to SSE.

4C. Emergency Condition (MSLB)

Loads are same as in condition 3C, except
Lateral and vertical load due to SSE.

5A. Construction Condition

Dead load of containment vessel and appurtenances.
Snow load.
Wind load.
Construction load.
Walkway live load.
Personnel access lock floor live load.

5B. External Pressure Condition

Dead load of containment and appurtenances.
External design pressure of 0.5 psig.
Lateral and vertical load due to 1/2 SSE.

6A. Initial Test Condition

Dead load of containment and appurtenances.
Internal test pressure of 13.5 psig.
Snow load.
Wind load.

6B. Final Test Condition

Dead load of containment and appurtenances.
Internal test pressure of 13.5 psig.

7. Post-Accident Fuel Recovery Condition with Flooded Vessel

Dead load of containment and appurtenances.
Hydrostatic load Case II (see Figure 3.8.2-1).
Personnel access lock floor live load.

A summary of these load combinations with their corresponding allowable stress criteria is given in Tables 3.8.2-1 and 3.8.2-2.

3.8.2.4 Design and Analysis Procedure

3.8.2.4.1 Static Stress Analysis

A detailed stress analysis of all major structural components was prepared in sufficient detail to show that each of the stress limitations of Table 3.8.2-1 was satisfied.

The equivalent stress at any point of the primary containment cylindrical wall and dome is the value of stress derived from the stress condition at the point by means of a theory of failure for comparison with the mechanical properties of the material used. The theory of failure used was the maximum shear stress theory. Using this theory, normal stresses were combined with shear as applicable to derive stress intensities.

The bottom liner plate is encased in concrete and serves as a leak-tight membrane only (not a pressure vessel). The liner plate is anchored to the concrete by welding it continuously to steel members embedded in and anchored into the base mat.

The juncture of the cylinder to the base mat is a point of discontinuity.

Details of this juncture are shown in Figure 3.8.2-7. In the analysis, the juncture was considered to be a point of infinite rigidity. The cylinder at this point cannot expand or rotate under the internal pressure and temperature load conditions; hence, shear and moment are introduced into the cylinder wall. The analysis to obtain the moments and shears in the cylinder wall due to these loads at this joint was accomplished by equating the deformations of the cylinderical shell and the supported edge.

At the point the knuckle is welded to the vessel a backup stiffener is used. This stiffener gives added rigidity at the point of the weld. Additional protection of the knuckle is accomplished by encasing the knuckle in “Fiberglass” before floor concrete placement.

The embedded knuckle was designed to take interior pressure plus internal or external hydrostatic loads. It was assumed that a crack can occur in the concrete allowing pressure loads on the embedded knuckle. Anchor bolts were post-tensioned to prevent any cracking of the concrete. Thermal and pressure discontinuity stresses in the containment occur one foot above the last weld of the knuckle.

The requirements of ASME Code Case 1392 are applicable to the containment vessel in this application. The minimum thickness of the bottom configuration was determined using the design rules of ASME Code Section VIII.

Circumferential compressive stresses resulting from external pressure forces were calculated and held below the critical buckling stress by a factor of safety of four.

The primary containment vessel structure was analyzed for a steady state condition in the following manner:

1. The forces, displacements, and stresses in the structure due to wind, dead load, steady state internal or external pressure, water, and externally loaded penetrations were determined by computer. The program used was "GENSHL 5 Layered Static Shell Program" described in Appendix 3.8D.

2. This computer program allows the total mathematical model for the actual structure to be analyzed at one time. The model has a fixed base.

3. Asymmetrical thermal loading exists because of various relatively confined areas in the lower compartment and because the ice condenser does not cover the full 360° of the containment structure. The effects of this asymmetry were evaluated by computer (see Item 1).

Secondary and local stresses at penetrations subjected to applied loads were analyzed. The stresses were combined vectorially at eight points on the circumference of penetration and resolved into primary stresses at each point. The stress intensity at each point was then computed.

Penetrations not subjected to applied loads were designed by the area replacement method in accordance with Section III, ASME Boiler and Pressure Vessel Code.

When required, reinforcement was provided at penetrations to meet the requirements of the allowable stress criteria of Table 3.8.2-1. Normally, reinforcement consists of thickening the shell plate adjacent to the penetration. Large penetrations, such as the equipment and personnel access openings, required stiffeners for reinforcement.

3.8.2.4.2 Dynamic Pressure Transient Analyses

Description of Analyses

The containment fabricator, Chicago Bridge and Iron Company (CBI) was required by the specification to perform a complete design in accordance with the requirements of the ASME Boiler and Pressure Vessel Code, 1968 winter edition, for a Class B vessel. For the pressure transient analysis, CBI chose to perform this dynamic analysis treating the vessel as a lumped-mass cantilever beam model. In addition, TVA made dynamic analyses to determine the response of the containment vessel to the non-axisymmetric pressure loading (NASPL). The response of the vessel was determined by a dynamic analysis treating the vessel as a lumped-mass cantilever beam and a dynamic shell analysis.

The mathematical model of the containment vessel used in the TVA dynamic beam analysis is shown in Figure 3.8.2-8. Each mass represents the mass of the vessel, stiffeners, and attached masses. The cantilever beam model was loaded with the forces from the NASPL. The forces were resolved into X and Y components and applied as mass point loads in the north-south and east-west directions.

The response of the model to pressure transients was determined using the method of modal analysis. This consists of uncoupling the equations of motion which is accomplished by assuming that the response is a superposition of the normal modes of the system multiplied by the corresponding time-dependent generalized coordinates. The total response was then found by summing the effects of the significant modes of vibration. The modal values of shape, shear, and moment were computed and analyses were made for the response to the pressure transient loads in the X and Y directions. The final response was found by taking the vector sum of the response in both directions for all loading conditions.

This analysis was very similar to the dynamic analysis made by CBI and served an independent check of their work. The results of the two analyses were very nearly the same.

TVA was concerned that these asymmetric dynamic loads might induce significant lobar type response of the shell structure which is not given in a beam type analysis. As a result of this concern, a linear, dynamic shell analysis using the finite-element method was made.

The computer program used in the dynamic analysis of the steel containment vessel is a multipurpose computer program for linear analysis of axisymmetric structures subjected to arbitrary asymmetric loads. The program is described in the report by Sukmar Ghosh and Edward Wilson, “Dynamic Stress Analysis of Axisymmetric Structures under Arbitrary Loads,” Report No. EERC 69-10, University of California, Berkeley, 1969.

The basic structural components considered were the vertical cylinder, dome, and stiffeners acting as one structure. The vessel was idealized as an axisymmetric structure as shown in Figures 3.8.2-9 and 3.8.2-10. The finite elements are simple conical frustra.

The non-axisymmetric pressure forces were approximated by a Fourier Series. For each Fourier component the stiffness and mass matrices and corresponding load vector were solved throughout the time-history of the pressure transients. The equations of motion were solved by the direct integration method, i.e., the simultaneous solution of the equations of motion using a step-by-step integration technique. The total response of the containment was determined by summing the response of each Fourier term.

Results of TVA and CBI Analyses

The results of the CBI and TVA analyses were compared to choose the most conservative approach. The CBI analysis required seven circumferential stiffeners plus additional vertical stiffeners at large attached masses such as the equipment hatch and personnel locks. The TVA shell analysis, which considered ovaling and lobar types of motion as well as beam type motion, showed significant local overstresses at the base of the containment over a considerable area at

the ice condensers and in the dome. These overstresses indicated that local buckling of the thin shell created an overall instability problem which could not be ignored and that further stiffening of the vessel would be required. Consultation with Gilbert Associates and Duke Power Company verified the TVA results. This consultation also verified that the considered break in Element 1 was the controlling design loading for the containment vessel.

The design of the additional stiffening was accomplished by the following steps:

1. Dynamic shell analyses were made for various configurations of circumferential stiffeners and combinations of circumferential and vertical stiffeners. Practical considerations prohibited the use of circumferential stiffeners only and a combination of circumferential and vertical stiffeners were used to reinforce the vessel. The final stiffener configuration which satisfied the initial buckling stress criteria consisted of 17 circumferential stiffeners, and vertical stiffeners on 4° centers. The stiffener arrangement and finite element model used in the analyses are shown in Figure 3.8.2-10.

   Using the results of the TVA finite element shell analysis, both TVA and CBI have independently designed the additional stiffening and redesigned the existing stiffening to meet the design criteria within the stated allowable stresses.

2. Using the results of the TVA finite element analysis, both CBI and TVA have independently investigated the containment anchorage knuckle section, effects of local vibration of attached masses relative to the shell, and other points of discontinuity for effects of the pressure transient loading. The TVA investigation of the anchorage configuration is shown in Appendix 3.8C. This investigation shows that the anchorage is within allowable stresses.

3. The vessel has been analyzed for seismic and dead loads using the additional stiffeners in the model. The method of analysis is the same as described in Section 3.7.2.

4. Further revision of the pressure transient loadings necessitated a dynamic stability analysis of the containment vessel. Details of this stability analysis are given in Reference 8.

3.8.2.4.3 Thermal Analysis

A thermal analysis was performed on the containment for LOCA. A description of the shell temperature transients due to a rupture of a reactor coolant pipe is given in Appendix 3.8A. The analysis was done by inputting Fourier expansions for load components in the computer program, GENSHL 5. This is a layered static shell program from The Franklin Institute Research Laboratories by Z. Zudans, T. Y. Chu, H. M. Fishman, T. Y. Chow, and J. W. Soule. The tolerable temperature rise for the steel containment is well above these temperatures shown, as the steel shell was designed for the basic stress limits of the ASME Boiler and Pressure Vessel Code, Section III, for ASTM A-516, Grade 60 steel at 300°F.

Also, as seen by these curves, the containment shell will experience an unbalanced temperature loading for the three compartments. The temperature difference between any two adjacent points on the vessel is held within the limits of paragraph N-415.1 of the Code. For the shell analysis, the thermal load vectors were expanded into harmonic coefficients.

The stiffener thermal analysis was based on a variable temperature on the cross-section of the stiffener. The same analysis as described above for the containment was used on the stiffeners with this exception.

3.8.2.4.4 Dynamic Seismic Analysis

The dynamic analysis of the containment vessel was performed by the modal analysis method described in Section 3.7.2.

3.8.2.4.5 Penetration Analysis

The vessel manufacturer was responsible for the design of the steel containment including the reinforcement required at the penetrations (reference Appendix 3.8B). The specifications required the manufacturer to submit all preliminary design calculations for TVA's review before any material was detailed or fabricated.

In addition, TVA engineers performed an independent analysis of those steel containment vessel penetrations for which the loads increased as a result of the inertial effects of DBA and earthquake on the Piping Systems. The methods used to qualify these penetrations are similar to those used by the vessel manufacturer. However, TVA used an in-house method consistent with Table 3.8.2-1, to perform the nozzle analysis, and a AAA Technology, Incorporated program, WERCO, to perform the shell analysis.

The in-house method combines the piping reactions from the individual loadings to calculate the stresses in the nozzle at both inside and outside the limits of reinforcement using standard empirical formulae. Finally, stress intensities are calculated from these stresses using maximum shear stress theory.

The load case components from the in-house method were also used as input for the WERCO program. The WERCO program computerizes the techniques in the Welding Research Council (WRC) Bulletin 107, "Local Stresses in Spherical and Cylindrical Shells due to External Loadings," Reference 9.

Adjacent penetrations' affects were also considered where these penetrations are close enough to have significant carryover stresses.

Penetrations not subjected to applied loads were designed by the area replacement method in accordance with ASME Code Section III. Reinforcement was provided at penetrations to meet the requirements of the allowable stress criteria of Table 3.8.2-1. Normally, reinforcement consists of thickening the shell plate adjacent to the penetration. Large penetrations, such as the large equipment and personnel access openings, require stiffeners for reinforcement.

Piping Support Analysis

Rigid pipe supports were modeled utilizing the SAGS finite element program. These models were constructed of beam type elements. These supports were designed in accordance with AISC criteria and Table 3.8.2-2.

Airlock Natural Periods of Vibration

The lock is a single degree of freedom system (when considering each of the three directions of vibrations separately) and the natural periods of free vibration are determined in the following manner:

Case I & II

$$T = 2\pi\sqrt{\frac{I_0}{K}}$$

Where:	T	=	Natural Period
	I_o	=	Mass moment of inertia of appurtenance about axis of rotation
	K	=	Spring constant of elastic shell
		=	M/Θ
	M	=	Unit moment acting on appurtenance
	Θ	=	Angular rotation at shell junction

The spring constant M/Θ is determined by using "Stresses from Radial Loads and External Moments in Cylindrical Pressure Vessels," P. P. Bijlaard, Figure 3 and 7 for the B based on the proper parameters for the junction.

Case III

$$T = 2\pi\sqrt{\frac{m}{K}}$$

Where:	T	=	Natural Period
	m	=	Mass of Appurtenance
	K	=	Spring constant of elastic shell
		=	P/W
	P	=	Unit radial force acting on appurtenance
	W	=	Radial deflection at the shell

The spring constant P/W is found from Table 1 of "Stresses from Radial Loads in Cylindrical Pressure Vessels," by P. P. Bijlaard.

Forces and Moments Applied to the Shell

Once the lock accelerations are found, forces and moments to be applied to the shell are derived in the following manner:

Case I M_L = Moment applied to the shell in the meridional direction

= $(F_1 + W_1) L_1 + (F_2 - W_2) L_2$

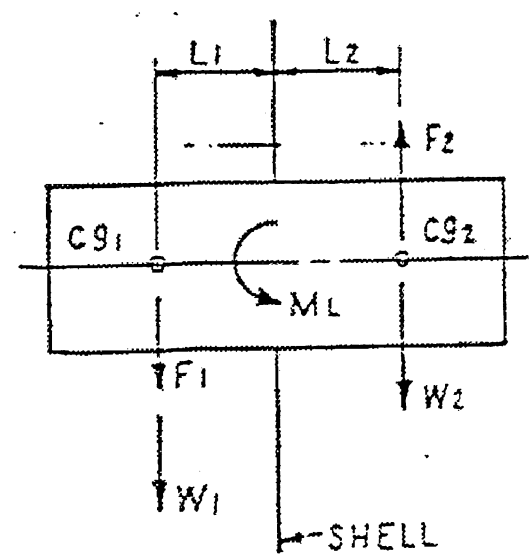

Where:

$$F_1 = \frac{W_1 a}{g} = \textit{Dynamic Force acting on lock}$$

$$F_2 = \frac{W_2 a}{g} = \textit{Dynamic Force acting on lock}$$

a = Linear acceleration of lock c.g. in meridional direction
W_1 = Weight of lock outside of shell
W_2 = Weight of lock inside of shell
g = acceleration of gravity
L_1 & L_2 = respective moment arms

Case II Mc = Moment applied to the shell in the circumferential direction
= $F_1 L_1 + F_2 L_2$

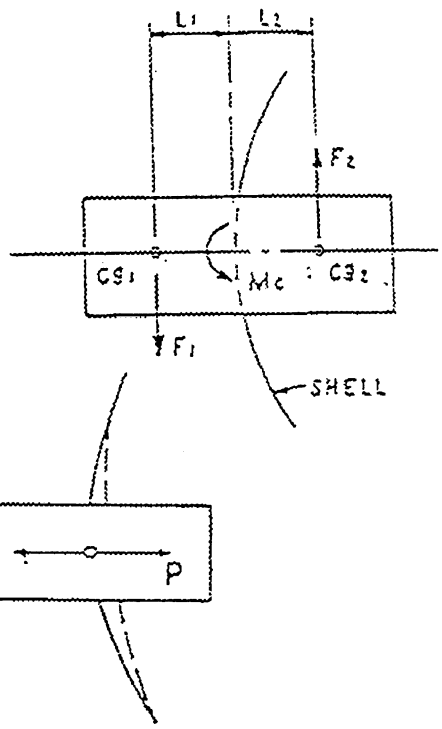

Where:

$$F_1 = \frac{W_1 a}{g} = \text{Dynamic Lock Force}$$

$$F_2 = \frac{W_2 a}{g} = \text{Dynamic Lock Force}$$

a = Linear acceleration of lock c.g. in either direction
W_1 = Weight of lock outside of shell
W_2 = Weight of lock inside of shell
L_1 & L_2 = respective moment arms

Case III P = Radial load applied to shell

$$= \left(\frac{W_1 + W_2}{g}\right) a$$

a = Linear acceleration of lock c.g. in radial direction

Note that for Cases I and II the linear accelerations are for the c.g. of the total lock. However, since this c.g. is very near the shell and would result in relatively small moments, these accelerations were conservatively applied in an additive manner to the c.g.'s of both sides of the lock to account for any rocking effect of the lock.

<u>Shell Stresses Due to Applied Forces and Moments</u>

Once forces and moments were determined the shell stresses due to dynamic loads from the lock were found using the methods of Welding Research Council Bulletin 107.

3.8.2.4.6 Personnel Lock Bellows Seal

Details of the expansion bellows seal between the personnel locks and the Shield Building are shown in Figure 3.8.2-11. In the design of the bellows, the following conditions were considered:

1. Operating Condition.

    a. No appreciable bellows displacement.
    b. External pressure of 3 lb/in^2 on the bellows due to tornado depressurization.

2. Cold Shutdown Condition.

    a. Thermal contraction of the vessel due to minimum service temperature of 30°F.
    b. Seismic motions of the Vessel, Lock, and Shield Building.

3. Transient Accident Condition.

    a. No appreciable temperature or pressure displacements.
    b. Seismic motion of the Vessel, Lock, and Shield Building
    c. Motion of the lock and vessel due to transient pressures.

4. Steady State Accident Condition.

    a. Thermal growth of the vessel due to 220°F vessel design temperature.
    b. Pressure growth of the vessel due to 10.8 lb/in^2g vessel pressure.
    c. Seismic motions of the Vessel, Lock, and Shield Building.

5. Two lb/in^2 vacuum in annulus.

The upper personnel lock receives the greater displacement and was used as the basis of the designs. Due to the fact that the personnel locks are nearly centered on the vessel shell, there is no appreciable independent lock motion due to vertical earthquake and horizontal earthquake perpendicular to the lock. Horizontal earthquake acting parallel to the lock does induce independent lock motion.

For computing thermal movements of the bellows, the installation temperature was assumed to be 70°F.

For the five design conditions enumerated above, the summation of the relative displacements between the Lock and the Shield Building, was used to determine the size of the bellows.

3.8.2.5 Structural Acceptance Criteria

3.8.2.5.1 Margin of Safety

A certified stress report was prepared for the vessel in accordance with the requirements of the ASME Code. This report contains several hundred pages and therefore is not included in this report.

Design values for transient pressure loads were determined by multiplying the calculated values by 1.3 as described in Section 3.8.2.3.1. A dynamic stability analysis was performed and reported in Reference 8.
.
Nonpressure parts such as walkways, handrails, ladders, etc., are designed so that the stress in the members and welds do not exceed the allowable stress criteria as set forth in the February 1969, AISC "Specification for Design, Fabrication, and Erection of Structural Steel for Buildings." The factor of safety of these allowable stresses with respect to specified minimum yield point of the material used are as defined in Section 1.5 of "Commentary on the Specification for the Design, Fabrication, and Erection of Structural Steel for Buildings."

Local areas, such as the personnel and equipment hatch areas, were checked for deformations to avoid a resonant condition. The vessel as a whole was not designed to deformation limits. Shutdowns and startups do not occur with a frequency that required a design for fatigue failure. The number of cycles will not affect the containment vessel service life.

3.8.2.5.2 Vessel Material Inspection and Test

ASTM standard test procedures were employed for the liner and shell plates to ascertain compliance with ASTM specifications. Certified copies of mill test reports of the chemical and physical properties of the steel were submitted to TVA for approval. All vessel pressure boundary material was tested (one test for each heat of steel) to determine its Nil Ductility Transition Temperature (NDTT). These tests were conducted to meet the requirements of ASME Boiler and Pressure Vessel Code, Section III, paragraph N-1211. The tests were conducted at maximum temperature of 0°F.

Ultrasonic inspection was required for all pressure boundary plates subjected to tensile forces normal to the plate surface. This inspection was performed in accordance with ASME SA-435 specification.

3.8.2.5.3 Bottom Liner Plates Test

Before concrete was placed over the bottom liner, the leak tightness of this liner was verified. All liner plate welds were vacuum box tested for leak tightness. Upon completion of a successful leak test, the welds were covered with channels, and the channels were leak tested by pressurization.

3.8.2.5.4 Vertical Wall and Dome Weld Tests

Welds in the cylinder wall and dome per ASME Code, Section III, Categories A and B, were 100 percent radiographed. Welds in Categories C and D were examined by magnetic particle, liquid penetrant, or ultrasonic methods.

3.8.2.5.5 Soap Bubble Tests

Upon completion of the construction of the containment vessel, a soap bubble test was conducted with the vessel pressurized to 5 lb/in^{2}g. Soap solution was applied to all weld seams and gaskets, including both doors of the personnel airlocks.

A second soap bubble inspection test was made at 12 lb/in^{2}g upon completion of the overpressure test in accordance with the requirements of the ASME Code.

Any leaks detected by soap bubble test which could affect the integrity of the vessel or which could result in excessive leakage during the leakage rate tests were repaired prior to proceeding with the tests.

3.8.2.5.6 Overpressure Tests

After successful completion of the initial soap bubble test, a pneumatic pressure test was made on the containment vessel and each of the personnel airlocks at a pressure of 13.5 lb/in^{2}g. Both the inner and outer doors of the personnel airlocks were tested at this pressure. The test pressure in the containment vessel was maintained for not less than 1 hour. The test pressure was maintained on each individual airlock door for not less than one-half hour.

3.8.2.5.7 Leakage Rate Test

Following the successful completion of the soap bubble and overpressure tests, a leakage rate test at 12 lb/in^{2}g pressure was performed on the containment vessel with the personnel airlock inner doors closed.

The Contractor performed the leak rate testing by the “Absolute Method,” which consists of measuring the temperature, pressure, and humidity of the contained air, and making suitable corrections for changes in temperature and humidity.

Equipment and instruments were calibrated and certified before any pressure tests were initiated.

Continuous hourly readings were taken until it was satisfactorily shown that the total leakage during a consecutive 24 hour period did not exceed 0.1 percent of the total contained weight of air at test pressure at ambient temperature in accordance with the requirements of 10 CFR 50, Appendix J.

The Contractor and Engineer’s representatives reviewed the leakage rate data during the test to determine adequacy of the test, authorize termination, or require continuation of the test.

3.8.2.5.8 Operational Testing

After completion of the airlocks, including all latching mechanisms, interlocks, etc., each airlock was given an operational test consisting of repeated operation of each door and mechanism to

determine whether all parts were operating smoothly without binding or other defects. All defects encountered were corrected and retested. The process of testing, correcting defects, and retesting was continued until no defects were detectable.

3.8.2.5.9 Leak Testing Airlocks

The airlocks were pressurized with air to 13.5 lb/in^{2}g. All welds and seals were observed for visual signs of distress or noticeable leakage. The airlock pressure was then reduced to 12 lb/in^{2}g, and a thick soap solution was applied to all welds and seals and observed for bubbles or dry flaking as indications of leaks. All leaks and questionable areas were clearly marked for identification and subsequent repair. During the overpressure testing the input door was locked with hold-down devices to prevent upsetting of the seals.

The internal pressure of the airlock was reduced to atmospheric pressure and all leaks repaired after which the airlock was again pressurized to 12 lb/in^{2}g with air and all areas suspected or known to have leaked during the previous test were retested by above soap bubble technique. This procedure was repeated until no leaks were discernible by this means of testing.

3.8.2.5.10 Penetration Tests

Type B tests were performed on all penetrations with test bellows and/or pressure taps in accordance with the requirements of 10 CFR 50, Appendix J. See Chapter 6 for imposed leak rates and tests performed on penetrations.

3.8.2.5.11 Post-Weld Heat Treatment

Field welded joints did not exceed 1-1/2 inch and therefore the containment vessel as a completed structure did not require field stress relieving. Insert plates at penetration openings did not exceed 1-1/2 inch in thickness and stress relieving was not required by ASME Code before or after they were welded to adjacent plates. Post-welded heat treatment, where required, was performed as required by and in accordance with the ASME Code.

3.8.2.5.12 Impact Testing

Charpy V-Notch impact tests were made of material, weld deposit, and the base metal weld heat affected zone employing a test temperature of not more than 30°F below minimum operating temperature. The requirements of the ASME Code were met for all materials under jurisdiction of the Code.

All weld procedure qualifications for procedures used on the containment vessel will also meet code requirements for ductility.

3.8.2.6 Design Loading Combinations and Stress Limits

Loading conditions and the design stress limits associated with allowable stress criteria for the vessel material are given in Tables 3.8.2-1 and 3.8.2-2.

3.8.2.7 References

1. American Society of Heating, Refrigeration, and Air-Conditioning Engineers, Handbook of Fundamentals, 1967.

2. American Concrete Institute Proceedings, Volume 59 Report No. 201, December 1962, H. R., "Durability of Concrete in Service."

3. "Long-Time Atmospheric Corrosion Tests on Low Alloy Steels," Copson, American Society for Testing Materials Proceedings, Volume 60, page 650, 1960.

4. Atmospheric Corrosion Testing of Metals in Canada, Gibbons, E.V.

5. Lauobe, C. P., "Corrosion of Steels in Marine Atmospheres," Trans Electro Chemical Society, Volume 87, 1945.

6. Vernon, Trans. Faraday Society, 1934.

7. "Corrosiveness of Various Atmospheric Test Sites as Measured by Specimens of Steel and Zinc," Coburn, American Society for Testing

8. Tennessee Valley Authority, Division of Engineering Design, Thermal Power Engineering Branches, Civil Engineering Branch, Report No. 72-21, "Stability Analyses of the Sequoyah Nuclear Plant Containment Vessel," November 29, 1973, and Supplementary Information, August 1, 1974.

9. Wichman, K. R., Hopper A. G., and Mershon J. R., "Local Stresses in Spherical and Cylindrical Shells Due to External Loadings," Welding Research Council Bulletin 107, August 1965.

10. SQN Environmental Design Criteria, SQN-DC-V-21.0. See FSAR 15.5.8, Reference 17.

11. TVA Design Specification SNP-DS-1705-9803-02.

3.8.3 Concrete Interior Structures

3.8.3.1 Description of the Interior Structures

3.8.3.1.1 General

This structure, shown in Figures 1.2.3-11, -12, -13 is a complex assemblage of reinforced concrete walls, slabs, and columns housed inside the steel containment vessel. It will act as a temporary barrier while routing steam to and through the ice condenser in the event of a LOCA. The reactor, four steam generators, four reactor coolant pumps, pressurizer, ice condenser, reactor instrumentation, air-handling equipment, and various other support systems are located inside this structure.

The portion of this structure which separates the upper compartment from the lower is defined as the divider barrier (see Figure 1.2.3-12). The failure of any part of the divider barrier is considered critical since it would allow LOCA steam to bypass the ice condenser, thereby increasing the pressure within the steel containment. For this reason these features of the divider barrier designed using Table 3.8.3-1 are designed more conservatively than the rest of the internal structure.

Since the ice condenser is both a structure and an Engineered Safeguard System, most detail information can be found in Section 6.5.

3.8.3.1.2 Containment Floor Structural Fill Slab

The containment floor slab is a reinforced concrete slab of 2-foot nominal thickness cast on top of the bottom liner plate. Reinforcement is provided in both faces to withstand uplift pore pressures below the liner plate and to develop restraint for uplift and rotational moments at the base of the crane wall. Earthquake shearing forces are transmitted to the base slab by shear keys under the crane wall, through a direct tie with the reactor cavity, and through direct bearing on the base of the Shield Building wall as a result of the expanded volume of the fill slab under operating temperatures. Stresses resulting from shear forces are very low since any one of the three methods is capable of transmitting the entire shearing force.

The interior concrete structure is sufficiently keyed to the reactor cavity by its configuration of walls and slabs to provide base stability against earthquake overturning moments above the bottom liner plate at Elevation 677.78. In addition, the anchorages for the Steam Generators and Reactor Coolant Pump Supports tie the containment structural fill slab to the base slab in the vicinity of the crane wall.

3.8.3.1.3 Reactor Cavity Wall

This 17-foot-inside-diameter-circular wall supports and encloses the 1400-kip reactor vessel above the lower reactor cavity. Primarily for radiation shielding this wall is 8-1/2 feet thick and extends from the base slab at Elevation 679.78 to Elevation 689.71 where it intersects the refueling canal floor slab. Neutron detector chambers reduce the effective structural thickness to 6 feet for approximately the first 10 feet of height. The next 12 feet of height has only a 4-foot 3-inch structural thickness due to the 3-foot 1-inch wide by 6-foot 6-inch high inspection cavity which surrounds the reactor vessel. This is shown in Figure 1.2.3-11.

3.8.3.1.4 Compartment Above Reactor

This compartment is approximately a 270° arc continuation of the reactor vessel annulus wall. The ends of the arc intersect the two refueling canal side walls. The inside diameter is 26 feet and the thickness is 4 feet extending from the top of the reactor vessel at approximately Elevation 702.15 to the bottom of the divider barrier slab at Elevation 731.13. This compartment is vented to the lower compartment area outside the wall by six openings which reduce the wall to five columns. These columns each have a cross sectional area of 12 square feet and extend the last 4-1/2 feet of height to the bottom of the divider barrier slab. This compartment is shown in Figure 1.2.3-11.

During reactor operation this compartment is sealed across the top by the concrete missile shield and at the refueling canal by a concrete gate.

Seals Between Upper and Lower Compartments (Divider Barrier)

See Figure 3.8.3-1.

The seals extend across the gap between the inside surface of each steel containment vessel and the concrete structure within each vessel. They are located along the bottom of the concrete floor under the ice condenser, at Elevations 720 feet, 5 inches and 727 feet, 9 inches between the ends of the ice condenser and the refueling canal concrete structure, and along the vertical sides of the refueling canal structure. These seals form part of the barrier between the upper and lower compartment of the containment vessels.

Similar seals classified as non-Category I butt against this seal at four places.

The seals consist of long strips of flexible coated fabric made of Presray Corporation EPDM Compound E603 (2 ply Dacron Coated EPDM) with both edges hemmed to form pockets into which metal clamp bars are inserted. These strips are field-spliced and glued overlay joints to form a continuous seal.

The seals are attached to the containment vessel and the interior concrete structure with bolted clamp angles, spaced 1 foot ± apart. The angles grip the clamp bars in the pockets at the seal edges.

The seals form part of the divider barrier between the upper and lower compartments of the containment vessels. During normal operating conditions, the seals prevent airflow around the ice condensers. In an accident, the seals and the other divider parts limit the amount of hot gases, steam, and vapor that can bypass the ice condensers. The seals will maintain their integrity for the first 12 hours after an accident. A small amount of leaking during this period is permissible.

The seals will maintain their integrity during earthquake conditions and effectively maintain their air seal. The seals will function effectively in a post-earthquake condition.

3.8.3.1.5 Refueling Canal Walls and Floor (Divider Barrier)

These irregular shaped walls and slabs vary in thickness and enclose an area approximately 19 feet by 36 feet. This area will be filled with water along with the compartment above the reactor during refueling operations. The water level will be about 35 feet above the canal floor. The reactor internals will be removed and stored in the refueling canal during refueling. Refueling canal walls and floor are shown in Figure 1.2.3-11.

3.8.3.1.6 Crane Wall

This approximately 3-foot-thick, 117-foot-high cylindrical wall encloses an 83-foot-inside-diameter area containing the reactor, reactor coolant pumps, steam generators,

pressurizer, and reactor coolant piping. This wall acts as the major support for the divider barrier slabs and walls. It also supports the floors and walls in the 13-foot annulus between it and the steel containment vessel. The 175-ton polar crane is mounted on top of this wall. Over the refueling canal the wall has a section removed leaving a curved beam 23 feet deep spanning an arc of 41 feet between ice condenser compartment end walls. Beginning at Elevation 723.42 the crane wall has 24, 7-foot 4-inch high by 6-foot 8-inch openings for the ice condenser inlet doors. The remaining wall consists of 25 columns each having an 8-square-foot cross section. Above the operating deck floor at Elevation 733.63, the crane wall is part of the divider barrier. It is also part of the pressurizer and steam generator compartments, which constitute part of the divider barrier, and is designed to resist the same pressures as these compartments. At the top of the crane wall the steel support beams for the ice condenser bridge crane cantilever over the ice beds causing moments in the crane wall. Lateral seismic loads from the ice beds are transmitted to the outer face of the crane wall.

Personnel Access Doors in Crane Wall

Four access doors in the lower half of the crane wall are provided in each Reactor Building at the following locations:

Floor Elevation	Azimuth
679.78	221°
679.78	299°
693.00	114° 16'-11"
722.00	299°

The doors provide passageways 3 feet-0 inch wide by 6 feet-6 inches high through the concrete crane wall for workmen and tools. When closed, the doors seal the passageways against steam jets, pressure, and missiles that may originate from pipe rupture in the compartment inside the crane wall.

Each door is manually operated and hinged to a steel frame embedded in the concrete wall. Each door consists of a steel skin plate stiffened by horizontal framing. The skin plate is faced with a cushioning structure of vertically arranged square steel tubing separated from the doors skin plate by a collapsible latticework of steel bars, the purpose of which is to absorb the energy of missiles striking the door. The cushioning structure is covered with sheet steel for appearance. Bearing of the door against the frame is through steel bars. An elastomer seal is attached to the periphery of the door to reduce the possibility of damage from jets to items beyond the door. Two lever-type latches functional from either side hold the door in the closed position. Hinges on the doors are provided with graphite impregnated bushings.

The doors, under normal operating conditions, provide an effective seal against airflow and can be operated and secured by one man from either side. For pipe rupture accidents, the doors seal

the passageways in the crane wall against missiles, jets, and pressure that may originate within the crane wall enclosure, thus preventing consequent damage to the containment vessel and to piping and machinery between the crane wall and containment vessel.

The doors will maintain their integrity and seal for not less than the first 12 hours following an accident. Limited leakage during this period is permissible.

3.8.3.1.7 Steam Generator Compartments (Divider Barrier)

Two double-compartment structures house the four steam generators in pairs on opposite sides of the building. Each structure consists of curved and straight sections of walls that vary in thickness from 2 to 4 feet. Divider barrier walls around two steam generators extend 42 feet up from the divider floor and are capped with a 3-foot-thick slab spanning over the steam generators from the crane wall. A wall between the two steam generators extends from the divider barrier walls to the crane wall, completing the double compartment. The center wall extends only 32-1/2 feet above the floor. The area above the top of this wall, except for that occupied by a main steam pipe restraint beam, will reduce the compartment pressure buildup in a single compartment by venting the steam to the other compartment. See Figures 1.2.3-11, -12, and -13.

During the Unit 1 and Unit 2 steam generator replacements, for each unit, four construction openings in the steam generator compartment concrete roofs were created to facilitate removal of the old steam generators and installation of the replacement steam generators. The compartments were restored by connecting the removed section of concrete to the remaining structure using through-bolted steel connection frames. Steel shims were placed in the gap between the removed concrete sections and the remaining structure and the gap was filled with non-shrink grout.

3.8.3.1.8 Pressurizer Compartment (Divider Barrier)

This compartment separates the pressurizer from the upper compartment. Its walls project about 38 feet above the Elevation 733.63 floor where they are capped with a 3-foot-thick slab. It is similar to the steam generator compartments except its wall thickness varies from 2 to 3 feet and the volume is much smaller, see Figure 1.2.3-12. A hatch is provided in the top of the compartment.

3.8.3.1.9 Operating Deck at Elevation 733.63 (Divider Barrier)

This 2-1/2-foot-thick irregular shaped floor is the major divider barrier between upper and lower compartments. It is supported at its outer edges by the crane wall and the compartment walls for the steam generators and pressurizer. Support near the center of the building consists of the refueling canal walls and the five columns of the upper reactor compartment. This floor contains five hatches for equipment removal. The concrete covers on these hatches are designed for the same loadings as the floor. The floor outline is shown in Figure 1.2.3-11.

3.8.3.1.10 Ice Condenser Support Floor - Elevation 721 (Divider Barrier)

This floor extends 12 feet 8 inches from the outside of the crane wall to the 4-inch expansion joint separating it from the steel containment vessel. A circumferential beam under its outer edge is cast with the floor. This edge beam is supported by concrete columns which extend down through the Elevation 693 floor to the fill slab at elevation 679.78. The floor extends 300° around the outside of the crane wall between the ice condenser end walls at azimuths 245° and 305°, as shown in Figures 1.2.3-11, -12, -13.

3.8.3.1.11 Significant Penetrations Through the Divider Barrier

Canal Gate

The canal gate consists of three removable concrete wall elements as illustrated on Figures 1.2.3-11 and 1.2.3-12. The elements are 2 feet 6 inches thick and span between 7-inches-deep slots formed in the walls of the refueling canal.

Control Rod Drive (CRD) Missile Shield

The CRD missile shield consists of three removable concrete slabs as illustrated on Figures 1.2.3-11, -12, and -13. The slabs are 3 feet 6 inches thick and are anchored to the divider barrier slab at Elevation 733.63 by anchor bolt assemblies.

Reactor Coolant Pump Access and Lower Compartment Access

Access to the reactor coolant pumps and lower compartment is provided by removable slabs. The reactor coolant pump access slabs are approximately 10 feet in diameter and the lower compartment access slab is approximately 6 by 10 feet. Both are 2 feet 6 inches thick and are anchored to the divider barrier slab by anchor bolt assemblies around the edges.

Equipment Access Floor Hatch

This hatch consists of a removable structural steel framed hatch cover and a structural steel support frame adjacent to the containment vessel. The support frame and hatch cover consist of structural steel wide flange sections covered with steel plate. To provide adequate seals between the upper and lower compartment, the side of the frame adjacent to the containment vessel was designed to span from the refueling canal wall to the divider barrier slab, a distance of approximately 5 feet. The hatch cover is anchored to the concrete structure by anchor bolt assemblies at each end of the cover.

Escape Hatch

The location of the hatch is shown on Figure 1.2.3-11. The hatch consists of a frame embedded in the divider barrier floor with a hinged and manually operated cover consisting of skin plate stiffened by framing. Quick-acting wheels are provided for opening and closing the cover from either side. Coil springs are incorporated with the hinges to reduce the force required for opening the cover.

Air Return Duct Penetration

The air return ducts penetrate the divider barrier at two different locations as indicated on Figures 1.2.3-11, -12, and -13. One penetration is at Elevation 723 and the other is at Elevation 733.63. The penetrations are 4-foot 6-inch inside diameter circular openings with flanges on both sides to provide attachment for the ventilating ducts.

3.8.3.1.12 Concrete Block Shield Walls

At two locations within the interior concrete, openings are provided in the structural walls to permit access for equipment maintenance. To minimize the effects of radiation, these openings are filled with concrete blocks. Structural steel restraints are provided to insure the stability of the walls under all load conditions.

3.8.3.2 Applicable Codes, Standards, and Specifications

Structural design of the interior concrete structures is in compliance with the American Concrete Institute 318-63 Building Code Working Stress Design Requirements for all load combinations shown in Table 3.8.3-1, including LOCA calculated pressures with moisture entrainment received from the NSSS Contractor; or the ACI-ASME (ACI 359) Article CC-3000 document, Proposed Standard Code for Concrete Reactor Vessels and Containments, and ACI 318-71 for all load combinations shown in Table 3.8.3-2, including LOCA calculated pressures.

All reinforcing steel conforms to the requirements of ASTM designation A 615, Grade 60. Construction was carried out under the requirements of TVA Construction Specifications G-2.

Unless otherwise indicated, the design and construction of the interior structures are based upon the appropriate sections of the codes shown in Section 3.8.12, with the following additions:

13. American Society of Mechanical Engineers, Boiler and Pressure Vessel Code, Sections II, III, V, VIII, and IX, 1971 Editions, as amended through summer 1972 addenda.

14. American Society for Testing and Materials, 1972 ASTM Standards.

15. Crane Manufacturers Association of America, Incorporated. C.M.A.A. No. 70, Specification for Electric Overhead Traveling Cranes, 1971.

16. Structural Engineer Association of California:
“Recommended Lateral Force Requirements and Commentary,” 1968 Edition.

17. Nuclear Construction Issues Group*

    NCIG-01, Revision 2 - Visual Welding Acceptance Criteria for Structural Welding at Nuclear Power Plants

    *The referenced NCIG documents may be used after June 26, 1985 to evaluate weldments that were designed and fabricated to the requirements of AISC/AWS. When invoked, NCIG provisions will be implemented as indicated in section 3.6.8.

18. NRC Standard Review Plan 6.2.1.2, Subcompartment Analysis

3.8.3.3 Loads and Loading Combinations

Loading combinations and allowable stresses are shown in Tables 3.8.3-1, 3.8.3-2, 3.8.3-3, 3.8.3-4, and 3.8.3-5. General loads are described below.

Dead Loads

These loads consist of the weight of the structure and equipment, plus any other permanent load contributing stress such as hydrostatic and earth pressure.

Live Loads

These loads include movable equipment loads and other loads which vary with intensity and occurrence.

Normal Temperature

These are the straight line temperature gradients which exist through member thicknesses due to differences in operating temperatures of various compartments.

LOCA Pressure

These loads are time varying pressure differentials that will result between compartments in the event of a double-ended break of a reactor coolant pipe as given in Chapter 6. They vary in magnitude depending on the location of the pipe break. During the construction of Unit 1 Reactor Building, the maximum calculated differential compartment pressures were increased by 40 percent in accordance with NRC requirements to account for uncertainties. At the Operating License stage, the design pressures equaled or exceeded the peak calculated differential pressure. Dynamic load factors were not applied in the structural analysis except for the ice condenser support floor since the vibration period of other components in the structure is small in comparison to the rate of application and duration of the pressure loads.

LOCA Temperature

Time varying, nonlinear temperature gradients due to a LOCA cause stresses in the restrained members of this structure. These gradients will vary depending upon time and member location in relation to the pipe break. Stresses were computed for these loadings using a TVA developed program which has the same basic assumptions as the (ACI 505-54) Reinforced Concrete Chimneys Code. A typical gradient for the divider floor is shown in Figure 3.8.3-2.

Creep and Shrinkage

Creep was not considered in the design of interior concrete for the reasons outlined in Section 3.8.1.4.

Shrinkage effects were considered as outlined in Section 3.8.1.4. The peak hydration temperature of the concrete used in the interior structures was estimated to be 130°F for summer placement with controlled placing temperatures of 65°F. From Figure 3.8.3-2 the average normal operating temperature for combination of shrinkage effects with other loads was 90°F resulting in a design temperature drop of 40°F. Under LOCA temperature gradients average temperatures exceed hydration temperatures and shrinkage stresses are relieved. Therefore, shrinkage effects are considered only with normal operating temperature gradients.

Hypothetical Pressure

This loading was due to a hypothetical compartment pressure used as part of the original design resulting from a double-ended break of a reactor coolant pipe if such pipe were located in either the pressurizer compartment, the steam generator compartment, or the compartment above the reactor. This loading was used as part of the original design and is not required to be considered in the evaluation and/or modification of the existing structures. This loading was the result of an agreement between Westinghouse Corporation and the Nuclear Regulatory Commission in order to provide a high degree of conservatism in the design of these compartments.

½ Safe Shutdown Earthquake (1/2 SSE)

Reference Section 3.7.2.

Safe Shutdown Earthquake (SSE)

This is the maximum postulated earthquake the plant is designed to withstand and still permit a safe shutdown. Reference Section 3.7.2.

Pipe Forces

These forces are the pressure jet effects that can occur due to breaks in systems piping. They may be the jet force impinging upon the structure, or the equipment and pipe anchorage forces as the result of such a jet. The static equivalent of the major equipment anchorage loadings were furnished by Westinghouse Corporation, the support designer.

Jet forces from postulated pipe ruptures, both longitudinal and transverse, were assumed to load the interior concrete structure.

Two loading conditions were assumed:

1. Effect of initial jet force alone on structure before the compartment transient pressure has time to build up.

2. Effect of jet force using the saturation pressure at the rupture point in combination with the uniform compartment differential pressure.

A minimum load factor k = 1.3 was used with both conditions based on localized yielding of the structural member and a ductility factor of 3. See Section 3.6.

The only jet force in the compartment above the reactor cavity is from the control rod opening. This is due to a pressure of 2250 lb/in^2. The reactor coolant pipe will not produce a jet force in this area.

Missiles

The systems located inside the reactor containment have been examined to identify and classify potential missiles. The basic approach is to assure design adequacy against generation of

missiles, rather than allow missile formation and try to contain their effects. Reference Section 3.5.

Ice Condenser Loads and Loading Combinations

The ice bed structure was designed to meet the loads described below within the behavior criteria limits presented in Table 3.8.3-5 of these criteria. The following load combinations are defined for design purposes:

1. Dead Load + 1/2 SSE loads (D + 1/2 SSE).
2. Dead Load + Accident induced loads (D + DBA).
3. Dead Load + SSE (D + SSE).
4. Dead Load + SSE + Accident induced loads (D + SSE + DBA).

The loads are defined as follows:

Dead load (D) - Weight of structural steel and full ice bed at the maximum ice load specified.

Live Load (L) - Live load includes any erection and maintenance loads, and loads during the filling and weighting operation.

Thermal Induced Load - Includes those loads resulting from differential thermal expansion during operation plus any loads induced by the cooling of ice containment from an assumed ambient temperature at the time of installation.

Accident Fluid Dynamic and Pressure Loads (DBA) - Accident pressure load includes those loads induced by any pressure differential drag loads across the ice beds, and loads due to change in momentum.

1/2 SSE - As previously defined.

SSE - As previously defined

3.8.3.4 Design and Analysis Procedures

3.8.3.4.1 General

The following discussion is a description of the original design and analyses performed to ensure that the design of the interior concrete structures complied with the applicable codes, standards, and specifications as stated in Section 3.8.3.2.

Each component of the interior concrete structure was considered individually. Its boundary conditions and degrees of fixity were established by comparative stiffness; loads were applied, and moments, shears, and direct loads determined by either moment distribution or finite element methods of analysis. Reinforcing steel was proportioned for the component sections in accordance with Table 3.8.3-1 or Table 3.8.3-2. The ultimate strength provisions of ACI 318-71 Building Code were used to check the combined effects of torsion, shear, and direct tensile loads.

During the construction stage, a factor of 1.4 was applied to the design pressures resulting from LOCA. The structure was then examined using the 40 percent margin and the recommendations

of the ACI-ASME Joint Committee contained in Proposed Standard Code for Concrete Reactor Vessels and Containment. The results are tabulated in Table 3.8.3-6. NRC Standard Review Plan 6.2.1.2, Subcompartment Analysis, Section II.B.5, permits reduction of design pressure so that the peak calculated differential pressure does not exceed the design pressure.

A completely independent design was performed on all portions of the divider barrier. Procedures used in this design and analysis are discussed in Sections 3.8.3.4.3 through 3.8.3.4.13.

3.8.3.4.2 Structural Fill Slab on Containment Floor

The fill slab is designed to span between walls with hydrostatic uplift pressure on 100 percent of its bottom face from water surface at Elevation 683. Loads from the steam generators and reactor coolant pumps are transferred directly into the base mat by continuous steel connections through the liner plate. As the base mat deflects under load, the fill slab deflects with it and is designed for these deflections. The fill slab is also designed for loads imposed upon it by the reactor coolant pipe crossover supports. Classical deflection formulas were used to determine moments, shears, and reactions. The finite element method of analysis was used to determine direct stresses in shear keys.

3.8.3.4.3 Reactor Cavity Wall

A guillotine break in the reactor piping at the reactor pressure vessel nozzle was identified as the DBA for the reactor cavity structure. Motion limiters were installed in the pipe sleeves on all the primary coolant pipes to reduce the asymmetric pressure by restricting the lateral movement of a broken pipe to less than one-half inch with a resulting break area of 100 square inches. The pressures for this break are discussed in Section 6.2.

An independent design review of the reactor cavity structure was performed to assure the adequacy of the structure for the resultant loading.

Original Design

A linear temperature gradient will occur during reactor operation. In the event of a LOCA the reactor is shut down and time varying nonlinear gradients similar to those in Figure 3.8.3-2 will occur in the wall. All temperature gradient cases are considered in the design up to a time of 48 hours following a LOCA.

Radiation generated heat on the structures is considered only for the primary shield immediately next to the reactor vessel. There the radiation generated heat is obtained as a function of position of the reactor core with respect to the structure and the temperature distribution is calculated. The effect of the temperature on the structure is then evaluated.

The average temperature of the wall during reactor operation exceeds hydration temperatures during construction. Therefore, tensile stress from temperature considerations will be less than

the stress induced by the temperature gradient. Long time creep relaxation can be expected to substantially reduce temperature stresses; however, such a reduction was not utilized since the effective operating temperature differential across the wall of the reactor cavity was only 35°F. The 8 1/2 foot thick portion of the wall is basically a thick cylinder for which simple expressions were derived to determine the ring moments and tensile stresses induced by the pressure loading and thermal gradients. The 4-foot structural portion from the top of the 8 1/2 foot thick ring to the top of the reactor continues essentially in the same shape and configurations as the compartment above the reactor; being fixed at its base by the 8 1/2 foot ring and the fuel pool floor and supported at the top by the operating floor. The wall was divided into segments and analyzed by the STRUDL II shallow-shell program for distributing moments and shears in both the vertical and horizontal directions. In addition, the large restraint forces from the steam generators and reactor coolant pumps were checked using ring action and flat plate formulas.

Independent Review

The structural model used in the independent review of the resultant loading was a three-dimensional assemblage of intersecting walls simulated by multiple layers of solid isoparametric finite elements. The general purpose computer program ANSYS, a well documented and widely used program, was used to calculate the stress intensity.

The analysis of the reactor cavity was approached from the standpoint that a dynamic and inelastic type analysis would be required. However, comparison of the natural frequencies of the structure and the shock spectra of the pressure transients as forcing functions indicated that dynamic amplification was negligible. A preliminary static analysis indicated that with the exception of several local regions the stress levels were within the allowable cracking stress of the concrete. Consequently, a final static elastic analysis was performed using the time varying pressures and associated reactor coolant loop concentrated loads.

A detailed analysis to determine unit stresses in the concrete and reinforcing steel was based on a cracked section and evaluated using the allowable stresses given in Table 3.8.3-1 and Table 3.8.3-2.

3.8.3.4.4 Compartment Above Reactor

This compartment is designed to resist the maximum internal differential pressure. This compartment was originally designed to resist a maximum hypothetical pressure of 65 lb/in^2, combined with dead load only.

The compartment will also be subjected to water pressure when the refueling canal is full of water and refueling of the reactor is taking place. Wave effects of the water during earthquake are taken into account.

This compartment was analyzed in conjunction with the refueling canal walls as described in Section 3.8.3.4.6.

3.8.3.4.5 Seals Between Upper and Lower Compartments

The flexible coated fabric part of the seal was considered as a thin-wall half cylinder as the fabric width was sized to form an approximate semicircle when subject to internal pressure. With the semicircle, there is adequate slack in the seals to provide for relative movement between the attaching surfaces during all conditions without damage to the seals.

The design of the seals was by TVA without the use of a computer program.

Earthquakes are the only natural environmental conditions which apply to the seals. The seals, being inside the containment vessel, are protected from floods, wind, tornadoes, snow, and ice. The seals are not in the area affected by missiles and therefore were not designed for missiles.

The design life of the seal materials in the expected radiation environment and at 120°F is eight years. However, replacement will be determined by the results of testing specimen coupons hung throughout the Reactor Building.

Minimum properties of the seal material are as follows for (a) the original material and (b) the same material after exposures equivalent to combined normal and accident conditions.

Tensile Strength	Original	After Exposure
Pounds per inch	Not Applicable	
Pounds per square inch	Not Applicable[1]	
Elongation	Not Applicable[1]	
Durometer	Not Applicable[1]	
Pneumatic Burst	Will not rupture at 60 lb/in[1]	Will not rupture at 15 lb/in[2]

[1]Material is coated fabric.

3.8.3.4.6 Refueling Canal Walls and Floor (Divider Barrier)

Primary Design

The canal walls and slab are designed to take the gravity and earthquake forces from the internals' storage stand. The face of the walls inside the lower compartment will be subject to LOCA pressures and localized jet forces due to a LOCA.

The walls of the refueling canal and the upper reactor cavity were analyzed as a unit. These walls were analytically modeled using STRUDL program finite element capabilities. Shallow shell curved-rectangular elements were used in the mesh assembly and spring constants were used to represent the stiffnesses of walls and slabs where the structure was supported from the crane wall and divider barrier floor.

The refueling canal slab was analyzed using the STRUDL flat plate rectangular elements.

Independent Review

1. Refueling Canal Floor

The refueling canal floor due to its irregular shape and support conditions was designed in three sections, where each section was also an irregular shaped slab. The larger section adjacent to the reactor cavity was designed using the finite element plate bending program GENDEK 3. The other two smaller sections were designed using the simpler, and more conservative, strip analysis.

The computer program GENDEK 3 used in the analysis and design of the refueling canal floor, and other elements of the independent design of the divider barrier, was originally developed by E. L. Wilson, University of California, Berkeley, 1969. The program will handle slabs of arbitrary geometry under lateral loads including slabs which are stiffened by discrete ribs. The slab is idealized by a mesh of plate bending finite elements. Variation in slab properties from element to element is permitted. The program makes use of the Felippa Q-19 quadrilateral plate bending element with orthotropic elastic properties.

2. Refueling Canal Walls

Several approaches were used in the design of these complex walls. The refueling canal walls and upper reactor cavity were modeled as a monolithic structure and analyzed with the computer program STRUDL II using flat plate and curved rectangular shell elements. Special attention was given to the stresses at points of stress concentrations with the use of a finite element plane stress program AMG033. Additional checks of the design values were made by modeling portions of the refueling canal walls as a plate using the plate bending program GENDEK 3.

STRUDL II computer program is well documented and will not be described here. AMG033 is a Plane Stress-Plane Strain finite element program developed by Rohm and Haas Company, Redstone Arsenal Research Division, Huntsville, Alabama, and described in Special Report No. S-76 “Application of the Finite Element Method to Stress Analysis of Solid Propellant Rock Grains” by Eric B. Becker and John J. Brisbane.

3.8.3.4.7 Crane Wall

Wall Below Operation Deck

In the lower compartment the crane wall is subject to jet forces due to a possible break in the reactor coolant or main steam piping. The largest of these postulated jet forces occurs at a crossover leg between a steam generator and a reactor coolant pump. Other areas at the crane wall in the lower compartment are exposed to LOCA pressure differentials.

The steam generators and reactor coolant pumps are braced laterally with restraints anchored into the crane wall. These restraints impose large concentrated forces on the wall.

Crane wall temperature gradients, before and after a LOCA, were investigated. At several elevations in the crane wall, maximum and minimum vertical loads were computed using results from the earthquake analysis prepared by TVA. In addition, various parts of the crane wall were designed to handle concentrated loads, 100 to 300 kips, resulting from breaks in small piping systems.

The crane wall was analyzed by isolating areas spanning between slabs and cross walls. Moments, shears, and axial forces were calculated using the STRUDL finite element program. Fixed-end moments were distributed between adjacent sections of wall using conventional distribution methods.

Columns between ice condenser doors are subjected to moments distributed from the ice condenser floor and divider barrier floor, as well as moments, shears, and axial forces from the wall sections above and below the columns. The columns were designed for these moments, shears, and axial forces plus earthquake loads. When combining torsional and direct tension forces on the columns, the ACI 318-71 Building Code was used in proportioning the reinforcing steel.

Personnel Access Doors in the Crane Wall

Main structural members of the doors were considered as simple beams. Energy absorbing members were considered as collapsible members. Members of the embedded frames were considered as being rigidly supported by concrete. Loads from the embedded frames are transferred to the concrete by embedded anchors.

Design of the doors and embedded frames was by TVA without the use of a computer program. Design of collapsible members on the doors was based on tests made by Oak Ridge National Laboratory. Results of these tests are recorded in their publication titled Structural Analysis of Shipping Casks, Volume 9, “Energy Absorption Capabilities of Plastically Deformed Struts Under Specified Impact Loading Conditions.” Collapsible members were sized to limit loads transmitted to the embedded frame to 13,000 pounds per linear foot.

The doors were designed to function during normal conditions, earthquakes, and pipe rupture accidents.

Earthquakes are the only natural environmental condition which applies to the doors. Being inside the containment vessels, the doors are protected from flood, wind, tornado, ice, and snow.

The doors will be closed any time reactor containment is required, except when a workman is passing through the access.

When containment is not required, the doors are not required to seal or to retain their integrity. Since the doors are left open only when containment is not required, seismic qualifications of the doors in the open position is not required.

Earthquake loads used in designing the doors were from accelerations determined for the crane wall at the horizontal centerline of each door by dynamic analysis of the Reactor Building for a 1/2 SSE and a SSE. These acceleration loads were used as static loads since the doors are firmly secured to the wall when closed.

Earthquake accelerations are as follows:

1/2 SSE

Elevation at Centerline Door	Lateral (N-S)	Lateral E-W)	Vertical
683.53	0.09 g	0.09 g	0.06 g
696.75	0.09 g	0.09 g	0.06 g
725.75	0.14 g	0.14 g	0.06 g

SSE

Elevation at Centerline Door	Lateral (N-S)	Lateral (E-W)	Vertical
683.53	0.18 g	0.18 g	0.12 g
696.75	0.18 g	0.18 g	0.12 g
725.75	0.23 g	0.22 g	0.12 g

Some air leakage may occur at the periphery of the doors during earthquakes, but this leakage will not exceed the permissible leakage area of 30 square inches per door.

Under normal conditions, seals on the doors will have a life of not less than 10 years, and the other parts of the doors will have a life of not less than 40 years. Some air leakage may occur at the periphery of the doors, but this leakage will not exceed the permissible leakage area for normal operation of 10 square inches per door.

Wall Above the Operating Deck (Divider Barrier)

Primary Design

Under accident conditions the crane wall above the operating deck is designed for maximum pressure differentials between the ice condenser compartments and the inside of the crane wall. It is also designed for the loads imposed on the wall by the lattice frame anchorages of the ice condenser. Maximum and minimum vertical loads imposed by the earthquake analysis are combined with these loads for the maximum stress conditions. The end walls of the ice condenser and the spacing of the steam generator and pressurizer walls stiffen the crane wall to such an extent that these loads essentially span horizontally between these supporting walls.

The stud loadings on the wall from the lattice frame may either add to or subtract from the pressure loading depending on whether the maximum pressure is inside the crane wall or in the ice compartment.

The upper restraint of the steam generators is designed such that the crane wall only receives load from a steam line break. Seismic restraints in the radial direction are transmitted through hydraulic snubbers to the floor of the operating deck. In the other direction they are transmitted to the walls of the steam generator compartment. The two steam generator restraint loads on the crane wall are assumed to occur coincidentally with the maximum pressure differential in the steam generator compartment.

During construction a 36-foot-wide opening, used for moving major equipment into the building, was left in the crane wall at approximately the 90° azimuth. This opening began at Elevation 733.63 and extended 46 feet high. This leaves a 3-foot-wide, 17-foot-deep curved beam spanning a 37-1/2-foot arc over the opening. This beam and the permanent beam over the refueling canal are designed to carry the construction loads of the polar crane, approximately 1200 kips maximum while installing major equipment. The permanent beam is also designed to take the reactions from the cantilevered beams supporting the ice condenser bridge crane. The analysis of these beams was made using manual calculations and STRUDL programs.

Independent Design

Crane Wall

The crane wall is subjected to forces induced by gross motion of the interior concrete structure resulting from 1/2 SSE, SSE, and DBA in addition to the forces and moments which act over localized areas. Modal analysis was used to determine response of the interior concrete structure. The design for localized loading was accomplished by isolating the areas affected. The edge conditions were simulated and finite element plate bending analyses were made using GENDEK 3. These loaded areas were generally bounded by slabs and compartment walls. Analysis of a 1-foot-wide strip was also used to determine the distribution of moments caused by slabs and walls connected with the crane wall.

Crane Wall in Steam Generator Compartment

The portion of the crane wall within the steam generator compartment was designed as a flat slab using the plate bending program GENDEK 3. The lower boundary condition was approximated by extending the finite element model to include the crane wall columns which lie below the steam generator compartment. Other loads supported by this portion of the crane wall as a part of the interior concrete structure were also considered in the design.

3.8.3.4.8 Steam Generator Compartments (Divider Barrier)

Primary Design

These compartments are designed to resist the maximum internal differential pressure and the jet force that would result following a main steam pipe break inside any single compartment.

Thermal effects accompanying a pipe break (See Figure 3.8.3-2) are also accounted for. A single compartment was also designed to resist 43 lb/in^2 hypothetical pressure combined with dead load only. This hypothetical loading was used as part of the original design and is not required to be considered in the evaluation and/or modification of the existing structures.

The center wall and the beam below the top slab are used as anchor points for main steam pipe restraints. These restraints prevent pipe whip in case of a pipe break and transmit forces in any direction to the wall.

These compartments span mainly in the horizontal direction resulting in tensile stress and horizontal moments in the walls near the center of their height. Close to the ends of the compartments discontinuity stresses, similar to those of a flat head cylinder, result in the vertical direction.

The STRUDL frame program was used to find the maximum horizontal forces in the walls by modeling a vertical 1-foot height of wall including a 112° sector of crane wall. Short chord lengths were used to represent curved sections of walls. The shallow shell and flat plate finite element STRUDL programs were used to analyze individual sections of the walls for moments and shears in both directions. The top slab was analyzed using a combined member-grid and flat plate finite element STRUDL program. Manual calculations were done at various locations to ensure computer accuracy. The inverted "tee" shaped beam which stiffens the top slab was analyzed for the dynamic effects of a main steam pipe breaking and striking the flange of the beam.

Independent Design

1. Roof Slab

   The roof slab was analyzed as a plate using the finite element plate bending program, GENDEK 3. The roof slab was analyzed both as a beam-stiffened slab and a uniform slab, neglecting the effects of the beam. The edges were considered fixed.

2. Enclosure Walls and Separation Wall

   The steam generator compartment walls were designed as a mixed model using the finite element features of STRUDL II. This mixed model was composed of flat plate and curved shell elements and was considered fixed at all points of intersections with the other components of the divider barrier. A further check was made by using the frame analysis features of STRUDL II and modeling a 1-foot-wide vertical section of both compartment walls and the separator wall as a series of beam elements fixed at the crane wall.

   The separator wall was also analyzed as a plate using GENDEK 3 with the edges fixed at the crane wall and enclosure wall and free at the top and bottom.

Reanalysis Due to Unit 1 and Unit 2 Steam Generator Replacement

The modified configuration of the Unit 1 steam generator compartment was analyzed for design loads using a 3D finite element ANSYS (Version 5.6) model. As part of performing the Unit 2 steam generator replacement, the ANSYS model applied to the Unit 1 steam generator replacement modifications of the steam generator compartment roofs was verified to be applicable to the similar modifications performed on the Unit 2 steam generator compartment roofs. Although the roof slab remains the focus of the evaluation, the model included five components - the 3 feet thick roof slab, entire steam generator compartment wall, center wall, 180° sector of the crane wall, and the whip restraint beam; to obtain an accurate representation of the system. The material properties used in the model for the concrete were consistent with those used in the original analysis. The concrete strength used in the roof evaluation is the in-place compressive strength of the steam generator compartment roof concrete at 90 days, which is 5700 psi.

The modified steam generator compartment roof was analyzed for the following design loads: dead load, live load, design pressure differential of 24 psi from a DBA (main steam pipe break), operating and accident temperature effects, seismic effects (OBE and SSE), and pipe thrust load on the whip-restraint beam from a broken main steam pipe. The modified steam generator compartment roof was evaluated to the load combinations and allowable stresses tabulated in Table 3.8.3-2A.

An exception from Table 3.8.3-2, which was used in the original evaluation of the interior concrete including the SG compartments, was taken for the load factors associated with the Yr load (reactor load due to fluid discharge on broken pipe, which in the present case is the pipe thrust load) for the Abnormal and Abnormal/Severe Environmental Load Categories as described below. The load combinations in Table 3.8.3-2 are based on Table CC-3200-1 of Reverence 3.8.3.9.1. The Yr load is combined with load factors of 1.5 and 1.25 that are associated with the DBA design pressures for the Abnormal and Abnormal/Severe Environmental Load Categories, respectively. Since the Yr load lasts at its peak value only for a very short duration and the time taken to build up the abnormal DBA pressure is much longer, the Yr load is important only for evaluating local effects and hence it is overly conservative to combine the Yr load with such extreme factored DBA pressures. Therefore, the load combinations used in this evaluation for the Abnormal and Abnormal/Severe Environmental Load Categories were based on Table CC-3230-1 of Reference 3.8.3.9.2, which superseded Reference 3.8.3.9.1, and are presented in Table 3.8.3-2A.

3.8.3.4.9 Pressurizer Compartment (Divider Barrier)

Primary Design

This compartment is design to resist the maximum internal differential pressure. The original controlling design loading is the 167 psi hypothetical pressure combined with dead load. Methods of analysis were similar to those of the steam generator compartments.

Independent Design

The same general procedures were used to design the Pressurizer Compartment as were used to design the steam generator compartment.

The roof slab was designed as a fixed-end slab with the use of GENDEK 3. The enclosure wall was designed by using STRUDL II, and the crane wall portion of the pressure compartment was designed as a slab using GENDEK 3. A check was made by analyzing a 1-foot-wide section of the enclosure wall, the crane wall within the compartment, and segments of the crane wall on each side of the pressurizer using STRUDL II.

3.8.3.4.10 Operating Deck at Elevation 733.63 (Divider Barrier)

Primary Design

The floor is designed for the maximum differential pressure and thermal effects due to a LOCA plus the saturation jet pressure acting over a local area. An instantaneous jet pressure locally is also a major design loading acting up on the floor. Upward loads from the missile shield are taken by this floor around the reactor cavity where the shield is bolted down.

This floor is designed for a 1000 lb/ft^2 live load plus several concentrated loads from the reactor head set-down which occur during refueling and periodic maintenance of the equipment.

During construction the floor had no edge support at the steam generator and pressurizer compartment walls, since the first lifts of these walls were carried by the floor itself. This special construction condition was examined separately using a 300 lb/ft^2 design live load in addition to the wet weight of the first 5-foot pour of walls.

The floor analyses were made using the STRUDL finite element program for flat plates utilizing both rectangular and triangular elements to assemble the irregular shape. Moments were distributed by manual methods at the juncture of the slab with the compartments and refueling canal walls.

Anchorage for the upper steam generator restraints is provided in this floor. These anchorage points have approximately a 5000-kip design force due to a LOCA combined with SSE. This force is horizontal to the floor and applied at points where openings create horizontal single span beams. These beams were analyzed using STRUDL and manual methods.

Independent Design

Analysis for normal loads were made using both GENDEK 3 and STRUDL II computer programs. Two finite element models were made of the portion of the operating deck between 0 and 180 degrees and a third model was used to analyze the deck between 180 and 360 degrees. Analyses were made with the boundary at the reactor cavity both fixed and hinged. A fixed edge condition was assumed at the crane wall, steam generator, and pressurizer compartments.

The operating deck is subjected to inplane forces from the upper steam generator support loads. A finite element plane stress analysis using the computer program AMG033 was used to design for this condition.

3.8.3.4.11 Ice Condenser Support Floor - Elevation 721 (Divider Barrier)

Primary Design

The finite element program ICES STRUDL II was primarily used in the analysis and design of the Elevation 721 floor. The outer circumferential beam was represented along with the floor by using a combined flat plate and grid member system. The supporting columns were modeled by using spring constants for rotation and deflection. Shear and moment values were obtained by modeling support points at the crane wall and cross walls with spring constants. Shear values were calculated from the vertical spring deflections.

Independent Design

The ice condenser floor was analyzed as a circumferentially beam- stiffened curved slab with continuous supports along the inner radius and ends and supported by columns along the outer radius. Analysis was made considering the columns flexible. The analysis was made using the computer programs GENDEK 3 and STRUDL II. The bracket that runs circumferentially on the outside of the crane wall directly under the ice condenser floor was analyzed as a plane stress problem using AMG033.

A dynamic analysis for use in determining dynamic amplification of the differential pressure transient forces during LOCA was made using STRUDL II.

3.8.3.4.12 Ice Condenser

Analysis, meeting the criteria presented in Section 3.8.3.5 has been done on the basis of Elastic System and component analyses. Limit load analysis was used as an alternate to the elastic analysis. Limit loads are defined using limit analysis by calculating the lower bound of the collapse load of the structure. Load factors are applied to the defined design basis loads and compared to the limit loads. The load factors determined for design basis load are used to provide margins of safety of the structure against collapse. A load factor of 1.43 was used when considering the mechanical loads due to dead weight and 1/2 SSE. A load factor of 1.3 was used for D + SSE and D + DBA. The material was assumed to behave in an

elastic-perfectly-plastic manner. The minimum specified yield strength was used. Mechanical plus thermal induced load combination and fatigue was analyzed in an elastic basis and satisfy the limits of Section 3.8.3.5. The stress analyses and results are described in Sections 3.7 and 6.5.

Experimental or Test Verification of Design

In lieu of analysis, experimental verification of design using actual or simulated load conditions was used. In testing, account was taken of size effect and dimensional tolerances (similitude relationships) which exist between the actual component and the test models, to assure that the loads obtained from the test are a conservative representation of the load carrying capability of the actual component under postulated loading. The load factors associated with such verification are: 1.87 for D + SSE, 1.43 for D + DBA or D + SSE, and 1.3 for D + SSE + DBA.

A single test sample is permitted but in such cases test results were reduced by 10 percent. Otherwise at least three samples were tested and the design was based on the minimum loading carrying capability.

Additional analysis results are described in Section 6.5.

3.8.3.4.13 Penetrations Through the Divider Barrier

Canal Gate

Primary Design

The canal gate sections are designed to span as simply supported beams across the refueling canal; a clear span of approximately 19 feet. Hand calculations using conventional methods were used for this design. The canal gate was designed to withstand a pressure differential between the compartment above the reactor and the upper compartment due to a LOCA. The canal gate sections had to withstand concentrated forces and moments from the UHI pipe restraints which are anchored thereon and which are the result of pipe rupture and seismic. The effect of seismic action on the canal gate sections is considered as well as the effect of maximum temperature differential across the gate.

Independent Analysis

The canal gate was designed as a simply supported plate spanning between the two refueling canal walls. The canal gate is required to maintain integrity between the upper and lower compartments during a LOCA and was designed for the maximum probable differential pressure. Concentrated loads imposed on this gate by the UHI piping were also considered. The effects of seismic and thermal action were evaluated.

Moments and shears were calculated using conventional hand methods. The evaluation of concrete and reinforcing steel stresses was based on a cracked section and the allowable stresses of Tables 3.8.3-1 and 3.8.3-2.

Control Rod Drive (CRD) Missile Shield

Primary Design

The CRD missile shield sections are designed to span as simply supported slabs across the compartment above the reactor. The slabs are held down at the ends by anchor bolts embedded in the operating deck slab. The missile shield is designed to withstand a maximum LOCA differential pressure between the compartment above the reactor and the upper compartment. The missile shield is subject to loading from the CRD mechanism as a missile. An accompanying jet force due to pressure escaping through the head of the reactor is also considered. The slabs are investigated for the maximum penetration resulting from the missile effects of the control rod drive shaft. The underside of the slab is faced with a 1-inch-thick steel plate to aid in resisting missile penetration. The penetration depths are calculated by use of the Petry formula and a formula by C. V. Moore, "The Design of Barricades for Hazardous Pressure Systems," Nuclear Engineering and Design 5 (1967), 81-97, North-Holland Publishing Company, Amsterdam. The calculated penetration depth is 2.2 inches into the 3-foot 6-inch thick slab. The effect of maximum temperature differential across the missile shield is also considered in the design.

Independent Design

The missile shield sections were analyzed as simply supported slabs spanning the compartment above the reactor. This shield must resist the maximum probable differential pressure from a LOCA to maintain integrity between the lower and upper compartments. Additionally, it must resist certain missiles from the control rod drive mechanism. Penetration into the steel plate and concrete were calculated and equivalent static loads for the impacting missiles were calculated and evaluated. Thermal stresses resulting from temperature differentials between lower and upper volumes were considered in the stress evaluation.

Concrete and reinforcing steel stresses were determined considering a cracked section and the stress allowables of Tables 3.8.3-1 and 3.8.3-2.

Reactor Coolant Pump Access and Lower Compartment Access Hatches

Primary Design

The reactor coolant pump access and lower compartment access slabs are designed to span simply supported between anchor bolts. The slabs are designed for both downward and upward loads acting on them. The downward loads are dead load and a 1000 lb/ft^2 live load. For upward loads, the slabs are designed to carry a differential pressure between the lower and upper compartments due to a LOCA. A jet impingement loading associated with this LOCA is also considered. The effect of maximum temperature differential as well as seismic effects on the slabs are accounted for in the design.

Independent Design

The reactor coolant pump access hatch and the lower compartment equipment access hatch were analyzed and designed as simply supported circular and rectangular plates. Maximum

moments and shear forces were obtained from a plate bending analysis. Dead, live, seismic, and thermal loads were combined with differential pressures and jet forces due to a postulated LOCA to give controlling factored and unfactored load cases. Shear stresses at the periphery of the hatch openings in the operating deck and stress levels in the perimeter anchor bolts were checked to insure compliance with criteria of Tables 3.8.3-1 and 3.8.3-2.

Equipment Access Hatch

The hatch cover is designed to span as a simply supported beam between the anchor bolt assemblies with the anchor bolts designed to withstand a load at least 5 percent greater than that calculated for the end reactions resulting from the actual load on the hatch. The controlling design condition is Design Basis LOCA Pressure - Dead Load + 1/2 SSE. Maximum differential temperature is considered in the design, but does not occur coincidentally with the maximum differential Design Basis LOCA Pressure. Calculated and allowable stresses are given in Table 3.8.3-7.

Escape Hatch

Structural components of the hatch have been designed such that the allowable stresses given in Table 3.8.3-8 will not be exceeded.

Air Return Duct Penetrations

The controlling design condition is Design Basis LOCA Pressure - Dead Load + SSE Loads. Maximum differential temperature is considered in the design, but does not occur coincidentally with a jet force or the maximum differential Design Basis LOCA Pressure. Calculated and allowable stresses are given in Table 3.8.3-9.

3.8.3.4.14 Concrete Block Shield Walls

To insure the stability of the concrete blocks during all loading conditions, structural steel restraints are provided. These satisfy all the requirements of the American Institute of Steel Construction (AISC) Code for design of steel components.

3.8.3.4.15 Divider Barrier Ultimate Capacity

Sections 3.8.3.4.1 through 3.8.3.4.14 describe the analysis and design of the structural components of the interior concrete structure in accordance with the load combinations of Tables 3.8.3-1 and 3.8.3-2. Additionally, each component was investigated to determine its ultimate pressure capacity. This determination is associated with the postulated pressure increase due to a possible hydrogen conflagration following a hydrogen generating accident. Whenever possible, conservative one-way-working models were used. However, some components were evaluated using slab yield-line theory.

3.8.3.5 Structural Acceptance Criteria

3.8.3.5.1 General

Structure

Working stress design and ultimate strength design methods in accordance with the applicable ACI codes were used. Where torsional shear was combined with direct tension the ACI 318-71 Building Code was used.

A comparison of the original available design stress margins for some design features for the load combinations of Tables 3.8.3-1 and 3.8.3-2 are listed in Table 3.8.3-6.

3.8.3.5.2 Structural Fill Slab on Containment Floor

Loading combinations 1, 2, 3 and 5, given in Table 3.8.3-1, each controlled the design at local areas of the floor slab. During the original design (construction permit) phase with 40 percent added to LOCA pressure, the controlling combination was "Abnormal/Extreme Environmental." See Table 3.8.3-3 and 3.8.3-10.

Shear transfer through the fill slab was discussed in Section 3.8.3.1.2.

3.8.3.5.3 Reactor Cavity Wall and Compartment Above Reactor

Loading combinations 1, 2, 3, and 5 in Table 3.8.3-1 were considered in the design. During the original design (construction permit) phase with calculated values of LOCA increased by 40 percent, the controlling load combination from Table 3.8.3-2 was "Abnormal." See Tables 3.8.3-6 and 3.8.3-10. The 4-foot structural thickness provided substantially more depth than required for limiting peripheral shear stresses of anchorage embedments for the restraints.

Earthquake shears for the interior structures were distributed to the various walls in proportion to the effective shear area of the walls using shape factors to arrive at the relative shear stiffness or effective shear areas of the various wall sections depending on the shape of each section. The allowable shear stress is based on the Structural Engineers Association of California Code recommendations.

Columns were designed for the effect of earthquake shears by considering the net deflections at the bottom and top of the columns from the seismic analysis and designing for the difference.

3.8.3.5.4 Refueling Canal Walls and Floor

Loading combinations 1, 2, 3, 4, and 5 in Table 3.8.3-1 were examined. During the original design (construction permit) phase, with calculated values of LOCA increased by 40 percent, the controlling load combinations from Table 3.8.3-2 were "Abnormal" and "Abnormal/Severe Environmental." See Tables 3.8.3-6 and 3.8.3-10.

3.8.3.5.5 Crane Wall

The crane wall was analyzed for loading combinations one through five from Table 3.8.3-1. During the original design (construction permit) phase, with calculated values of LOCA increased

by 40 percent, the controlling load combinations from Table 3.8.3-2 were "Abnormal/Extreme Environmental," "Abnormal/Severe Environmental," and "Abnormal." See Tables 3.8.3-6 and 3.8.3-10.

3.8.3.5.6 Steam Generator and Pressurizer Compartment

Loading combinations 1 through 5 from Table 3.8.3-1 were examined. During the original design (construction permit) phase, with calculated values of LOCA increased by 40 percent, the controlling load combination from Table 3.8.3-2 was "Abnormal." See Tables 3.8.3-6 and 3.8.3-10.

Shears were distributed as described in Subsection 3.8.3.5.3.

3.8.3.5.7 Operating Deck at Elevation 733.63

Loading combinations 1 through 5 from Table 3.8.3-1 were examined for the floor. During the original design (construction permit) phase with calculated values of LOCA pressure load increased by 40 percent, the controlling load combination from Table 3.8.3-2 was "Abnormal." See Tables 3.8.3-6 and 3.8.3-10.

3.8.3.5.8 Personnel Access Doors in Crane Wall

Allowable stresses for non-collapsible members for all load combinations used for the various parts are given in Table 3.8.3-4. Normal load conditions are shown for mechanical members only, as loads on structural members during normal conditions are negligible. For normal load conditions, factors of safety for mechanical parts are 5 to 1 from ultimate. For limiting conditions such as a SSE for mechanical and structural members only, stresses do not exceed 0.9 yield. Pipe rupture accidents apply to structural members only, as forces from jets and missiles are taken by the structural frame.

For collapsible members during a pipe rupture accident, stresses exceed yield and members are plastically deformed. Plastic deformation of energy absorbing members does not affect the sealing integrity of the doors.

3.8.3.5.9 Penetrations Through the Divider Barrier

Canal Gate and Control Rod Drive (CRD) Missile Shield

Loading combinations 1 through 5 from Table 3.8.3-1 were examined. During the original design (construction permit) phase, with calculated values of LOCA pressure increased by 40 percent, the controlling load combination from Table 3.8.3-2 was "Abnormal/Severe Environmental." See Tables 3.8.3-6 and 3.8.3-10.

Reactor Coolant Pump and Lower Compartment Access Hatches

Loading combinations 1 through 5 Table 3.8.3-1 were examined. During the original design

(construction permit) phase, with calculated values of LOCA pressure increased by 40 percent, the controlling load combination from Table 3.8.3-2 was "Abnormal/Severe Environmental."

Escape Hatch

Loading combinations I through III in Table 3.8.3-8 were examined. Loading combination II was the controlling case for design phase.

3.8.3.5.10 Seals Between Upper and Lower Compartments

The seals are subject to radiation as outlined herein during normal operating conditions. Under normal, earthquake, and accident conditions, the stress in the flexible fabric does not exceed 0.33 ultimate. Strength of the fabric material under normal and accident conditions was determined by laboratory test.

The seals are not required to maintain their integrity during a fire. It is assumed that a fire and an accident which require sealing will not occur simultaneously since the reactor will be shut down immediately if a fire develops.

3.8.3.5.11 Ice Condenser

Table 3.8.3-5 provides a summary of the allowable limits to be used in the design of the ice condenser components.

For all cases the stress analysis was performed by considering the load combinations producing the largest possible stress values.

When limit analysis is performed on the ice condenser structure, or parts thereof, using the Alternate Analytical Criteria method, Section 3.8.3.4.12, justification will be provided to show that the results of the Elastic Systems analysis are valid.

Stress Criteria

The stress limits for elastic analysis are:

1. D + 1/2 SSE

   Stress shall be limited to normal AISC, Part I Specification allowables (S). The members and their connections shall be designed to satisfy the requirements of Part I, Sections 1.5, 1.6, 1.7, 1.8, 1.9, 1.10, 1.15, 1.16, 1.17, 1.20, 1.21, and 1.22 of the AISC Specification (stress increase in Sections 1.5 and 1.6 is disallowed for these loads). Where the requirements of Section 1.20 are not met, differential thermal expansion stresses shall be evaluated and the maximum range of the sum of mechanical and thermal induced stresses shall be limited to three times the appropriate allowable stresses provided in Sections 1.5 and 1.6 of AISC Specification.

2. D + SSE, D + DBA

   Stresses shall be limited to normal AISC Specification allowables given in Sections 1.5 and 1.6, increased by 33 percent (1.33S). No evaluation of thermal induced stresses or fatigue is required. In a few areas, where the stresses exceed 1.33S but are below 1.5S, these cases will be presented to the NRC for their review.

3. D + SSE + DBA

   Stresses shall be limited to normal AISC Specification allowables given in Sections 1.5 and 1.6, increased by 65 percent (1.65S). No evaluation of thermal induced stresses or fatigue is required.

   For all cases, direct (membrane) mechanical stresses shall not exceed 0.7 S_u, where S_u is the ultimate tensile strength of the material.

The summary of the ice condenser allowable limits is given in Table 3.8.3-5.

3.8.3.6 Materials, Quality Control, and Special Construction Techniques

3.8.3.6.1 Materials

Concrete

This structure is designed using air entrained concrete with fly ash and additives. Compressive strength requirements varied throughout the structure depending on design loads.

Concrete materials were essentially as described in Section 3.8.1.6.1; however, minimum strength requirements varied with loading conditions. The basic strength requirement of the interior concrete structures was 5000 lb/in^2 primarily because of localized shear requirements. Higher strengths were required in some areas such as the crane wall columns at the ice condenser floor where 8000 lb/in^2 concrete was used. Where higher strengths were required, the age requirement for strength was 90 days to take advantage of the strength contribution of fly ash between 28 and 90 days. Lower strength concrete was used in the reactor cavity and el. 693 floor slabs, where 4000 and 3000 lb/in^2 strengths were used, respectively.

Reinforcing Steel

All reinforcing steel conform to ASTM Designation A 615, Grade 60.

Personnel Access Doors in Crane Wall

ASTM standards were used for all material specifications and certified mill test reports were provided by the Contractor for materials used for all load carrying members.

Seals Between Upper and Lower Compartments

The seals consist of long strips of flexible coated fabric with both edges hemmed to form pockets into which metal clamp bars are inserted. The coated fabric is dacron, coated on both sides with hydrocarbon rubber (ethylene-propylene-diene-polymer). The rubber is compound E603 by the Presray Company.

Escape Hatches in Elevation 733.63 Floor

ASTM standards were used for all material specifications and certified mill test reports were provided by the contractor for materials used for all load carrying members.

3.8.3.6.2 Quality Control

Concrete

The concrete quality requirements applied to the interior concrete structures were the same as provided in section 3.8.1.6.2 for the concrete shield building.

Some concrete mixes did not meet the TVA General Construction Specification No. G-2 requirement for strength during some time periods. The percent of tests less than the specified strength exceeded the G-2 requirement of 10 percent. All concrete pours placed during "low strength" time periods were evaluated.

The "low strength" periods for the mixes with specified strengths of 4000 and 5000 psi at 28 days were evaluated by determining estimated inplace design strengths based on the size of the member and the long-term strength gain based on a site testing program. The structure was evaluated for a reduced design strength if the inplace strength was less than required by the calculations or less than specified on the design drawings. The estimated inplace strengths were also verified by the results of 90 day strength tests on standard cured cylinders made at the time of the concrete placement.

A concrete mix with a specified strength of 8000 psi at 90 days was used for the crane wall columns and some slabs and walls in ice condenser area. This mix did not generally achieve the required strength. An evaluation of the strength results was performed and the structures evaluated for reduced equivalent specified strengths (6800 psi to 7600 psi depending on the time period).

Personnel Access Doors in Crane Wall, Escape Hatch in Elevation 733.63 Floor

Design by TVA and erection by TVA were in accordance with TVA's Quality Assurance Program. Design and fabrication by the Contractor were in accordance with the Contractor's Quality Assurance Program which was reviewed and approved by TVA's Design Engineers. The Contractor's Quality Assurance Program covers the criteria in Appendix B of 10 CFR 50. Fabrication procedures such as welding and nondestructive testing were included in appendices to the contractor's Quality Assurance Program.

ASTM standards were used for all material specifications and certified mill test reports were provided by the contractor for materials used for all load carrying members.

Seals Between Upper and Lower Compartments

The flexible coated fabric used for seals was certified by a qualified rubber technologist as being adequate for the normal and accident conditions. In addition, certified mill test reports were provided by the contractor for materials used for all load carrying members.

Testing of the seals in place under accident conditions is not feasible; therefore, laboratory testing was necessary. The flexible seal material was tested by The Presray Corporation under contract with TVA. Testing was performed with radiation, temperature, and pressure conditions as listed herein before for accident conditions. After exposure to accident conditions for temperature and radiation, the tensile strength of the material was sufficient to provide a factor of safety of not less than 3 to 1 for the load produced by accident pressure.

3.8.3.6.3 Construction Technique

No unusual construction procedures were employed in the construction of the interior structures.

Seals Between Upper and Lower Compartments

On periodic unit shutdowns, visual inspections of the seals are to be made. Parts inspected are to include all bolted connections, clamp bars, metal to fabric joints, and the rubber-coated fabric. The seals are to be replaced if they show any evidence of deterioration.

Escape Hatches in Elevation 733.63 Floor

Periodic visual inspections of the hatch covers are to be made. Parts inspected during the visual inspection are to include all bolted connections, structural members for paint deterioration, latching mechanisms, hinges, limit switches, and rubber seals.

The seals are to be carefully inspected for cracks, blemishes, or any other indications of deterioration of the rubber and for properly seating at the sealing surfaces.

3.8.3.6.4 Ice Condenser

Structural steels for ice condenser components are selected from the various steels listed in the AISC Specification. When materials such as steel sheets, stainless steel or non-ferrous metals are required and are not listed in the AISC Specification, these materials are chosen from ASTM specifications. Proprietary materials such as insulating materials, gaskets, and adhesives are listed with the manufacturers' name on the component drawings.

Material certifications for chemical analysis and tensile properties will be required with testing procedure and acceptance standards meeting the AISC or ASTM requirements.

Because the concept of non-ductile fracture of ferritic steel is not a part of the AISC Code and Westinghouse recognizes its importance in certain ice condenser components where heavy plates and structurals are used, such as the lower support structure, Charpy V-notch (CVN) energy absorption requirements are stipulated as shown in Table 3.8.3-11.

These criteria apply to the design of the following ice condenser components:

1. Ice basket and coupling.

2. Lattice frame and columns including attachments and bolts.

3. Structural steel supporting structures comprising the lower support structure, door frames, and bolts.

4. Wall panels and cooling duct support studs attached to the crane wall and end walls.

5. The supports of auxiliary components which are located within the ice condenser cavity but which have no safety function.

The various candidate materials, i.e., steel sheets, structural shapes, plates and bolting used in the Ice Condenser System are selected on the following bases:

1. Provide satisfactory service performance under design loading and environment and pressure or construction performance.

2. Assure adequate fracture toughness characteristics at ice condenser design conditions.

3. Be readily fabricated, welded, and erected.

4. Be readily coated for corrosion resistance when required.

The candidate materials are of high quality and were made by steelmaking practices specified by Westinghouse. Principal candidate materials meeting the above bases are listed below. Other materials for specific applications are selected on a case-by-case basis.

<u>Sheets</u>

Carbon steel sheets are commercial quality (CQ), drawing quality (DQ), or drawing quality-special killed (DQ-SK). The selection of the quality depends upon the part being formed. When higher strength, structural quality sheets are required, ASTM Specification A 607 is used. AISI Type 409 modified stainless steel is a potential alternate sheet material for the ice baskets.

The ice baskets will be made from perforated sheet material. The wall duct panels will be made from sheet material and the cradle supports from structural sections and plates.

Structural Sections, Plates, and Bar Flats

Structural sections, plates, and bar flats are generally high-strength, low-alloy steels selected for suitable strength, toughness, formability, and weldability.

The high-strength low-alloy steels are A 441, A 588, A 572, or A 633. These steels are readily oxygen cut and possess good weldability.

Bolting

High-strength alloy steel Type A 320 L7 bolting for low temperature service, is used for the lower support structure. Stocked bolting made from A 325, A 449, and ASTM A 354, Grade BD (SAE J429, Grade 8) materials is used for other parts. The above bolts must meet CVB 20 ft-lb at -20°F, for sizes greater than 1 inch in diameter.

Non-metallic materials such as gaskets, insulation, adhesives, and spacers are selected for specific uses. Freedom from detrimental radiation effects is required.

All structural welding shall be in accordance with the AWS Structural Code for Welding, D1.1 (AWS Code). The AWS Code is an overall welding system for the design of welded connections, technique, workmanship, qualification, and inspection for buildings, bridges, and tubular structures.

The quality of welds for the Ice Condenser System is based on paragraph 9.25 of the AWS Code.

Resistance welding shall be in accordance with AWS, Recommended Practices for Resistance Welding, C1.1.

Magnetic particle examination will be performed on at least 5 percent of the welds in each critical member of the lower support structure. Magnetic particle or liquid penetrant examinations where applicable, will be performed on 5 percent of the welds in each critical member of the balance of the ice condenser structure. The welds selected for examination were designated in the design specifications. The non-destructive examination methods and acceptance standards are given in Section 6 and paragraph 9.25, Quality of Welds, of the AWS Code.

3.8.3.7 Testing and Inservice Surveillance Requirements

Testing of the interior concrete structures is not planned. A completely independent design has been prepared for divider barrier features in order to ensure that during a LOCA the escaping steam will not bypass the ice condenser.

Personnel Access Doors in Crane Wall

Periodic visual inspections of the doors are to be made. Parts inspected during the visual inspection are to include all bolted connections, structural members for paint deterioration, latches, hinges, and elastomer seals. The seals are to be carefully inspected for cracks, blemishes, or any other indications of deterioration of the elastomer and for proper seating at the sealing surfaces.

3.8.3.8 Environmental Effects

The atmosphere in the ice bed environment is at 10°F and the absolute humidity is very low. Therefore, corrosion of uncoated carbon steel is negligible.

To ensure that corrosion was minimized while the components of the ice condenser were in storage at the site or in operation in the containment, components were galvanized, painted, or placed in a protective container. Galvanizing was in accordance with ASTM A 123 or A 386.

Materials such as stainless steels with low corrosion rates were used without protective coatings.

Corrosion has been considered in the detailed design of the ice condenser components, and it has been determined that the performance characteristics of the ice condenser materials of construction are not impaired by long-term exposure to the ice condenser environment.

Since metal corrosion rates are directly proportional to temperature and humidity, corrosion of ice condenser components at operating temperatures has been assumed to be almost non-existent. Data available in the open literature does not reflect the exact temperature range and chemistry conditions that are expected to exist in the ice condenser, but does indicate that corrosion rates decreased with decreasing temperatures for the materials and conditions being considered. Although the data in the literature indicated that corrosion of components is not expected, Westinghouse has chosen to employ several preventive measures in the construction of the Ice Condenser System. To inhibit corrosion, galvanizing is being used on the ice baskets. Westinghouse has performed tests which show that galvanized material would not be expected to fail due to corrosion during a 40-year exposure to a 5-15°F ice condenser refrigerated air environment. Other structural members were either galvanized, protected by corrosion resistant paints that meet the requirements of ANSI 101.2-1972 (Protective Coatings (Paints) for Light Water Nuclear Reactor Containment Facilities) as a minimum, or have been constructed of corrosion resistant steel.

With due consideration of the non-corrosive environment, and judicious selection of component materials based upon sound engineering judgment, the structural integrity of the ice condenser components will not be jeopardized, and the design criteria for the plant will be met.

3.8.3.9 References

1. Proposed ASME Section III, Division 2, 1973.
2. ASME Section III, Division 2, 1975.

3.8.4 Other Category I Structures

The Category I structures other than the primary containment structures are listed as follows:

1. Auxiliary Control Building.

    a. Control Bay Portion.
    b. Auxiliary Building Portion.
    c. Waste Packaging Area.
    d. Condensate Demineralizer Waste Evaporator Building Portion.
    e. Additional Equipment Building Portion.

2. Condenser Cooling Water Pumping Station and Retaining Walls.

3. Diesel Generator Building.

4. Category I Water Tanks and Pipe Tunnels.

5. Class IE Electrical Systems Structures.

6. East Steam Valve Room.

7. Essential Raw Cooling Water (ERCW) Pumping Station, Access Cells, & Protective Dike.

8. ERCW Discharge Box.

3.8.4.1 Description of the Structures

3.8.4.1.1 Auxiliary Control Building

The building consists of five major divisions: The Control Bay portion, the Auxiliary Building portion, the Waste Packaging Area, the Condensate Demineralizer Waste Evaporator Building portion, and the Additional Equipment Building portion. This building is a multistory reinforced concrete structure which provides housing for the Engineered Safety Feature Systems, etc., which are necessary to the two Reactor Units.

Certain floors in the Control Bay, the Condensate Demineralizer Waste Evaporator Building, and the roof of the fuel handling bay are supported by structural steel framing. Refer to Figures 1.2.3-1 through 1.2.3-9 for the general layout and configuration of the structure.

Control Bay Portion

The control bay portion is a multistory reinforced concrete structure that is built integrally with the Auxiliary Building portion. The structure is separated from the Turbine Building by a 2-inch expansion joint filled with fiberglass insulation which prevents interaction of the two buildings

when subjected to seismic motion. The structure was built in two stages. The first stage structure was a skeleton structure whose sole purpose was to provide a high platform for operation of the construction gantry crane. The completed stage is the final configuration.

Structural steel framing in the Control Bay consists of four steel framed bays of 25 feet-0 inch by 45 feet at Elevation 706.0 and the entire floor at Elevation 732.0.

At Elevation 706.0 the two exterior bays on both ends of the building are pipe run areas and consequently the floor is 1-1/2-inch deep steel grating on steel beams. Intermediate steel columns were used to reduce the beam size required.

The floor at Elevation 732.0 in the interior bays (between column lines C3 and C11) is 8-inch thick reinforced concrete slab cast on metal decking. The floor in the two exterior bays (between column lines C1 and C3 and C11 and C13) is reinforced concrete slab acting compositely with steel beams encased in concrete.

Control Room Shield Doors

The two doors are located inside the main control room at floor Elevation 732.0 at the doorways served by pressure-confining personnel access doors C36 and C54. The shield doors are manually operated from inside the control room. No seals are required on the shield doors as they do not serve any pressure confining function.

The doors can provide radiation shielding for personnel inside the main control room during a post-LOCA period. See FSAR Section 12.1.2 for radiation shielding requirements.

The two doors are identical except opposite hand and operate in opposite hand directions. Each door is a rectangular, structural steel frame with a skinplate on each side, thus forming a hollow box which is filled with lead shot to provide the required shielding.

Each door is suspended from above by two monorail-type trolleys operating on a standard structural I beam. The trolley closest to the leading edge of each door is of the geared, hand chain-driven type for opening and closing the door.

Manually operated, screw down dogs are provided at the top and bottom of each door for firmly securing the doors in either the open or closed position.

Auxiliary Building Portion

Structure

The building is a multistory reinforced concrete structure which provides housing for the engineered safety feature systems, which are necessary to the two reactor units. The Auxiliary Building structure is attached to the Control Building and located between the Reactor Buildings as shown between column lines q and y and A1 and A15 in Figure 1.2.3-1 through -9. In the final constructed state, the Control Building portion acts integrally with the Auxiliary Building portion. The Auxiliary Building is separated from the Reactor Buildings by a 1-inch expansion

joint and from the Additional Equipment Buildings by a 2-inch expansion joint each of which is filled with material that prevents interaction of the buildings when subjected to seismic motion.

The spent fuel pit and fuel transfer canal is housed within the Auxiliary Building. The massive reinforced concrete walls and slab are built integrally with the Auxiliary Building as illustrated by Figure 1.2.3-8.

Structural steel framing was used to support the Auxiliary Building roof over the area serviced by the Main Building crane because of the clear span requirements. This area is approximately 223 feet long and 80 feet wide. The roof is a reinforced concrete slab constructed on metal roof decking that is supported by steel purlins and steel roof trusses.

Railway Access Hatch Covers

Six hinged covers shown in Figures 1.2.3-3 and 1.2.3-8 combine to close the railroad access hatch opening in the floor of the Auxiliary Building at floor Elevation 734.0. With the six covers in the raised position, a clear opening of approximately 15 feet-6 inches by 68 feet-3 inches is provided over the railroad tracks. All spent fuel casks, new fuel shipments, and major items of equipment entering or leaving the Auxiliary Building above the Elevation 734.0 floor must go through this hatchway.

The hatch covers and their embedded frame provide a semi-airtight closure and operate in conjunction with the railroad access door to provide an airlock.

An Electrical Interlock System is provided to interlock the operation of the access hatch covers with the operation of the railroad access door. Two limit switches, connected in series to provide redundancy, are provided with each hatch cover and arranged to trip when a hatch cover begins to open. The interlocking of these switches with switches on the door prevents the door from being opened when any hatch cover is open or partially open. In like manner, switches on the door prevent opening of any hatch cover when the door is open or partially open.

The hatch covers are required to maintain their integrity and Category I function only when closed. When closed, there is no load on the operating machinery and it has no function to perform. Therefore, the operating machinery is not considered as Category I.

Railroad Access Door

The railroad access door for the Auxiliary Building provides closure for the access opening in the north wall at the railroad tracks which are at Elevation 706.0. The door and its embedded frame provide a semi-airtight closure and operate in conjunction with the railroad access hatch covers to provide an airlock.

With the door fully opened, the clear opening in the wall is 16 feet wide and 20 feet high. All new or spent fuel shipments and major equipment entering or leaving the Auxiliary Building by truck or other means passes through this door.

The door and door track are constructed of welded steel. The door, rectangular in cross section, is constructed of horizontal and vertical members with diagonal bracing as required for strength and rigidity. The exterior side of the door is covered with a steel skin plate. The embedded frame for the door is constructed of welded steel and is anchored to the concrete.

The door seals in the closed position with the side and top seals compressed against sealing surfaces on the embedded frame and the bottom seal compressed against an embedded sill plate. A sloped track guides the door rollers and positions the door so that the top and side seals contact the sealing surfaces only when the door is in or near the closed position.

An electric hoist unit opens and closes the door by lifting and lowering it vertically through a slot in the Elevation 734.0 floor. The hoist unit is mounted on the inside wall above the door slot. The door passes through this slot, and extensions of the frame act as guides for the door in the raised position.

The area above the floor at Elevation 734.0, occupied by the hoist and the door in its raised position, is enclosed with an airtight structural steel enclosure with gaskets provided on the access covers necessary for servicing the hoist unit and door.

Pressure Confining Personnel Doors

This section covers the following pressure confining personnel access control doors located in the Auxiliary Control Building. Door numbers listed for the doors are the designations used in in the plant.

1. The doors for stairs 7 and 8 penthouses at Elevation 749.0, doors A184 and A191.

2. The double doors to the personnel and equipment access rooms, elevation 734.0 (one for each unit), doors A152 and A159.

3. The double doors at the Ice Condenser Equipment Room, Elevation 734.0, door A155.

4. The double doors to the Emergency Gas Treatment Filter Room, Elevation 734.0, door A158.

5. The doors to the Reactor Building Access Room at Elevation 734.0 (one for each unit), doors A156 and A157.

6. The doors for stairs 3 and 4 penthouses at Elevation 734.0, doors A154 and A173.

7. The double doors to the elevator shaft at Elevation 734.0, door A153.

8. The N-line control bay doors at Elevation 732.0 (two double doors with bidirectional pressure requirements, doors C36 and C54) and elevation 706.0 (two double doors with bidirectional pressure requirements, doors C29 and C34).

9. The double doors to the heating and ventilating spaces at Elevation 714.0 (one for each unit), doors A123 and A132.

10. The door separating the Additional Equipment Building and the airlock at Elevation 714.0 (one for each unit, bidirectional pressure requirements), doors A214 and A215.

11. The door to the Cask Decontamination Room, Elevation 705.0, door A115.

12. The doors in the X-line wall of the cask loading area at Elevation 706.0 (one single door A113 and one double door A114).

13. The water tight doors leading to the instrument room at Elevation 685.0; one in N-line wall, C27, and one in C3-line wall, C14.

14. The doors to the Main Steam and Feedwater Valve Rooms at Elevation 706.0 (one for each unit), doors A101 and A105.

15. The water tight double doors at the main entrance from the Service Building, Elevation 690.0, door A57.

16. The water tight annulus access doors (one per unit, doors A65 and A78) and doors to the Reactor Building Access Rooms (one per unit, doors A64 and A77) at Elevation 690.0.

17. The water tight airlock door to the Radiochemical Laboratory at Elevation 690.0, door A55.

The doors are hinged, manually operated type metal doors, complete with frames and closers. The frames are either welded to plates, bolted to the concrete walls, embedded in concrete walls, or welded to embedded plates. Both single and double doors are involved. Double doors consist of an active and inactive leaf, with the active leaf being used for normal traffic. Doors C27, A55, A57, A65 and A78 have a single skin plate with horizontal stiffeners. All other doors are the flush type. Securing for tornado, annulus pressure drop, or flood is done by a normal latching mechanism except for doors C27, A55, A57, A65 and A78 which are secured by the use of hand-operated dogs. All doors affected by tornadoes are secured during tornado warning and doors A65 and A78 are secured during external flood warnings. Doors A55, A57, C27, and C14 will protect essential safety equipment in the auxiliary and control buildings to elevation 706.0 from internal floodwaters in the turbine building caused by a rupture in the Condenser Circulating Water system (CCWS).

During normal operation the doors provide personnel and equipment access. Doors A55, A57, A64, A65, A77, A78, A101, A105, A113, A114, A123, A132, A214, and 215 are also components of the building airlocks which serve to maintain a slight negative pressure in the Auxiliary and Reactor Buildings. These doors are equipped with electrical interlocks to assure that one of each pair of interlocked doors is always closed.

Spent Fuel Pool Gates

The fuel transfer canal gate as shown in Figure 3.8.4-11, when in the installed position, forms the boundary between the fuel transfer canal and the spent fuel pool. This gate is used for

dewatering the fuel transfer canal for maintenance or after refueling operation. This gate is installed or removed under balanced head. The cask loading area gate is abandoned in the open storage position. Both gates are of similar construction and are seismic Category I.

Waste Packaging Area

The waste packaging area is a one-story reinforced concrete structure supported on H-bearing piles and is located on the east end of the Auxiliary Building as shown in Figure 1.2.3-7. The roof of the structure slopes about 24° and consists of a series of precast beams tied together by a mat of reinforcing steel welded to plates embedded in the beams and topped by 4-inches of poured-in-place concrete. The structure is separated from the Auxiliary Building and the Condensate Demineralizer Waste Evaporator Building by a 2-inch expansion joint filled with fiberglass insulation which prevents interaction of the buildings when subjected to seismic motion.

Condensate Demineralizer Waste Evaporator Building Portion

The Condensate Demineralizer Waste Evaporator Building portion is a two-story reinforced concrete structure which houses equipment necessary for processing condensate demineralizer wastes and for serving as a backup in processing floor drain wastes. The structure is supported on H-bearing piles and is located on the southeast side of the Auxiliary Building as shown in Figure 1.2.3-7. The building is separated from the waste packaging area and the Additional Equipment Building by a 2-inch expansion joint filled with fiberglass material which prevents interaction of the buildings if subjected to seismic motion.

Additional Equipment Building Portion

The Additional Equipment Building portion consists of multistory reinforced concrete structures, one for each unit, which were added to accommodate additional accumulators for each unit and for the transfer of ice condenser equipment. The structures are located adjacent to the Reactor Buildings and near the east end of the Main Auxiliary Building as shown in Figures 1.2.3-1 through 1.2.3-6. Each building is founded on sound rock and is separated from the Condensate Demineralizer Waste Evaporator Building (Unit 2 structure only), the Reactor Building, and the Auxiliary Building by a 2-inch expansion joint filled with fiberglass insulation which prevents interaction of the buildings when subjected to seismic motion.

West Main Steam Valve Rooms

The west steam valve rooms are the compartments of the auxiliary building which house the isolation valves for the main steam lines penetrating the west side of the reactor building. From these rooms the main steam lines exit the auxiliary building.

To protect the west steam valve rooms from over-pressurization due to postulated large high energy pipe breaks, the roofs of the west steam valve rooms at Elevation 779 and the pressure relief hatches at Elevation 729 are designed to initiate pressure relief at a maximum of .5 psi (72 psf) differential pressure.

Additionally, to maintain the Environmental Qualification of the components located inside the valve rooms, the roof and hatches are designed to blow-away and provide and maintain the necessary flow areas after pipe breaks required by the Superheat Analysis.

3.8.4.1.2 Condenser Cooling Water Pumping Station and Retaining Walls

Pumping Station

The building is a reinforced concrete box-type structure housing the condenser circulating water pumps, cooling tower makeup pumps, and fire protection / flood mode pumps. The structure is founded on rock and back-filled on three sides to approximately the elevation of the top deck.

The structure is built without contraction or expansion joints. In the northwest-southeast direction, it is stiffened by two full height walls and three partial height walls extending the full length of the structure. In the northeast-southwest direction, the structure is stiffened by the many walls and piers making up the six pump bays. Refer to Figures 1.2.3-18 and 1.2.3-19 for details.

Retaining Walls

The retaining walls are rock founded, reinforced concrete cantilever walls located at each end of the forebay side of the intake pumping station. These walls retain the earthfill adjacent to the intake pumping station.

3.8.4.1.3 Diesel Generator Building

The building is a two-story rectangular reinforced concrete box-type structure which houses the diesel generators and their auxiliary equipment. Interior walls of reinforced concrete separate the diesel generators into four compartments. Diesel fuel storage tanks are embedded in the base slab. A concrete apron extending 13 feet from the edge of the structure is used to decrease the bearing on the subgrade to less than the allowable capacity. The entire structure is supported on soil. No connection of pipes or conduit were made until after completion of the structure and initial settlement stabilized. For general layout and configuration of the structure, see Figure 1.2.3-17.

Diesel Generator Building Doors and Bulkheads

The four doors shown in Figure 3.8.4-2 at Elevation 722.0 in the east wall of the Diesel Generator Building along with removable steel bulkheads above the doors provide closures for the 11 feet 10 inches high by 8 feet 8 inches wide access openings to the Diesel Generator Units. The access openings provide for passage of large tools and repair parts for the diesel generators. The doors are normally closed and latched. The bulkheads are bolted in position and are removed only for major repair of the diesel generators. The doors and bulkheads, in conjunction with the precast concrete barrier in front of them, protect the generators from damage by tornadoes, missiles, wind, snow, ice, and rain and form a part of the security system to prevent entry into the Diesel Generator Building by unauthorized persons.

Each steel bulkhead above the door is a structural steel frame 4 feet 4 inches high by 9 feet 6 inches wide. It is covered on both sides with a steel skin plate and provided with a crushable strip on the inner side along the top and sides. Turnbuckles support the steel bulkheads vertically and they are held horizontally by bolted clamps at the sides and top.

Each door is 7 feet 10 inches high and consists of two leaves which are manually operated and hinged at the outer sides to an embedded steel frame. The two leaves bear against steel bars at the outer sides and bottom, against each other at the center, and against a steel angle at the top. The bars are welded to the embedded frame and the angle to the bulkhead above the door.

Each door leaf is a structural steel frame covered on both sides with a steel skin plate and provided with a crushable strip around its periphery where it bears against lateral support. Both leaves are provided with latches which are operated from the inside only.

The crushable strip around the periphery of the doors and bulkheads is a latticework which is designed to absorb energy from missile impact. The doors and bulkheads may be deformed by the missiles but will remain in position.

The precast concrete bulkheads consist of several individual sections stacked into place and bolted in position to the concrete walls. They will be removed only for major repair of the diesel generators. These bulkheads provide protection from missile spectrum D of Table 3.5.5-5, as discussed in Section 3.5.5, Part II(D).

3.8.4.1.4 Category I Water Tanks and Pipe Tunnels

There is one refueling water storage tank (RWST) for each unit at Sequoyah Nuclear Plant. (The functional requirements for this tank are discussed in Chapter 6). Pipes extending from RWST to the Auxiliary Building are housed in reinforced concrete tunnels which vary in width and height.

Refueling Water Storage Tank (RWST)

The RWST is a seismic Category I structure but is not tornado Category I. A storage basin is provided around the tank to retain sufficient borated water in the event the tank is ruptured by a tornado missile or other initiating event. Details of the storage basin and the technical basis for it are discussed in Chapter 6. The minimum volume of contained water in the RWST is specified in the plant's Technical Specifications. The minimum and maximum volume of contained water in the RWST is also specified in Chapter 6. RWST is a cylindrical vessel whose longitudinal axis is oriented in the vertical direction.

The end of the cylinder which forms the base or bottom of the tank is completely enclosed with a 5/16-inch-thick flat plate. The base of the tank sits on a concrete granular fill supported foundation to which the tank is attached at 60 lug points. The reinforced concrete foundation is described in Section 3.8.5.1.2. The tops of the cylindrical section of the tank is sealed at the side-wall/roof intersection using conical-shaped roofs whose apexes coincide with the tank's longitudinal axis. An internal inspection of the RWST will be performed on a periodic basis for structural integrity and degradation.

The tank is equipped with an atmospheric vent located at the peak or cone apex of the roof. The vent is designed to pass a volume flow rate of air that is at least equal to the maximum

withdrawal rate from the tank. Necessary precautions have been taken in the design of the vent to assure birds, animals, and/or other foreign objects including rain cannot enter the tank. The foundation is shown in Figures 3.8.4-3 and 3.8.4-4.

Pipe Tunnels

The pipe tunnels housing the piping extending from the primary and refueling water tanks to the Auxiliary Building are concrete box-type structures which vary in width and height. The layout and configuration of the tunnels are shown in Figure 3.8.4-3.

3.8.4.1.5 Class IE Electrical Systems Manholes and Handholes

The location of category I electrical manholes and handholes is shown in Figure 3.8.4.5. The manholes and handholes shown in Figures 3.8.4-6 and 3.8.4-8 are typical of those that house the electrical cables that must remain in operation when flood levels rise above the plant grade. The manholes and handholes are rectangular box-type structures of reinforced concrete built essentially below plant grade with their top slab projecting above the surrounding soil.

3.8.4.1.6 East Steam Valve Room

The structure, shown in Figures 1.2.3-1 through 1.2.3-4, is designed to protect the isolation valves of the main steam and feedwater lines from the effects of tornadoes and earthquakes, as well as provide support for the valves and main steam pipes and feedwater pipes that exit from the Shield Building. The structure consists principally of three reinforced concrete walls anchored into a 7-foot-thick base slab. The structure is supported by eight concrete caissons 4 feet in diameter anchored in rock. A 1-inch expansion joint separates the Valve Room from the Shield Building.

Structural steel framing is used to support roof decking of the Valve Room. To protect the east steam valve room from over-pressurization due to postulated large high energy pipe breaks, the roof of the east steam valve room at Elevation 759 is designed to initiate pressure relief at a maximum of .5 psi (72 psf) differential pressure.

Additionally, to maintain the Environmental Qualification of the components located inside the valve room, the roof is designed to blow away and provide and maintain the necessary flow areas after pipe breaks required by the Superheat Analysis.

3.8.4.1.7 ERCW Pumping Station and Access Cells

The ERCW pumping station which supplies water to Units 1 and 2 is a waterfront concrete structure founded on bedrock. The base is tremie concrete contained by sheet pile cells; atop the base is a reinforced concrete box-type structure which houses the pumps, electrical and mechanical equipment. The structural outline of the pumping station is shown in Figures 1.2.3-14 through 1.2.3-16.

Six access cells house the ERCW piping and electrical conduit banks. They are filled with tremie concrete contained by sheet piling and are founded on bedrock. They also serve as access to the ERCW pumping station. Refer to Figure 3.8.4-9.

A rockfill dike (Figure 3.8.4.9) is located just upstream from the pumping station. This dike protects the pumping station from runaway barges. The dike is seismically qualified to prevent blockage of the intake to the ERCW Pumping Station.

Pile-Supported ERCW Piping Support Slab

The ERCW piping support slab is a segmented, reinforced concrete structure which passes through the ERCW access dike. The slab terminates at the first of the ERCW access roadway cells. The slab is supported by steel H-piles driven through the access dike to refusal. The slab is provided to prevent the imposition of excess deformations from settlement of the access dike on the ERCW piping. Typical cross sections of the ERCW access dike showing the location of the piping support slab and pile supports are shown in Section C5-C5 of Figure 3.8.4-9. The orientation of the slab along the longitudinal axis of the access dike and the spacing of the pile support is shown in Section A5-A5 of Figure 3.8.4-9.

ERCW Electrical Conduit Bank

The ERCW electrical conduit bank passes through the ERCW access dike parallel to and above the pile-supported piping slab discussed above. The bank is supported from the piping slab by concrete bents at intervals along the slab. Near the access dike-shoreline interface, the piping slab terminates. Beyond that point, the conduit bank is supported by pile-supported bents until the shoreline is reached. Cross sections of the access dike showing the relationship of the conduit banks and the piping slab are shown in Section C5-C5 of Figure 3.8.4-9. The location of the conduit bank along the longitudinal centerline of the access dike is shown on Section A5-A5 of Figure 3.8.4-9.

3.8.4.1.8 ERCW Discharge Box

The box is a soil supported, rectangular reinforced concrete box. The location and configuration of the structure is shown in Figure 3.8.4-10.

3.8.4.2 Applicable Codes, Standards, and Specifications

Unless otherwise indicated, the design and construction of the Category I structures other than the primary containment and interior structures are based upon appropriate sections of the following codes, standards, and specifications listed in Section 3.8.1.2, with the following additions. Modifications to these codes, standards, and specifications are made where necessary to meet the specific requirements of the structures. These modifications are noted in Sections 3.8.4.3, 3.8.4.4, and 3.8.4.6. Where date of edition, copyright, or addendum is specified, earlier versions of the listed documents were not used. In some instances, later revisions of the listed documents were used where design safety was not compromised.

1. American Concrete Institute (ACI):

ACI 315-74	-	Manual of Standard Practice for Detailing Reinforced Concrete Structures.
ACI 318-77	-	Building Code Requirements for Reinforced Concrete.
ACI 349-76	-	Code Requirements for Nuclear Safety-Related Concrete Structures Including the 1979 Supplement.

2. "Nuclear Reactors and Earthquakes," USAEC Report TID-7024, August 1963.

3. NRC Regulatory Guides:

   No. 1.13 Fuel Storage Facility Design Basis.
   No. 1.142 Safety-Related Concrete Structures for Nuclear Power Plants (Other Than Reactor Vessels and Containments).

4. TVA Construction Specifications:

   G-9 - TVA General Construction Specification for Rolled Earthfill for Dams and Power Plants.
   G-30 - TVA General Construction Specification - Fly Ash for Use As An Admixture in Concrete.

5. Steel Structures Painting Council, Surface Preparation Specification No. 2, "Hand Tool Cleaning."

6. American Gear Manufacturers Association, Standards for Helical and Herringbone Gears.

7. National Electrical Manufacturers Association, Motor and Generator Standards MG-1, 1970 Edition.

8. Structural Engineers Association of California, "Recommended Lateral Force Requirements and Commentary," 1968 Edition.

9. Nuclear Construction Issues Group*

   NCIG-01, Revision 2 - Visual Welding Acceptance Criteria for Structural Welding at Nuclear Power Plants.

---

*The referenced NCIG documents may be used after June 26, 1985, to evaluate weldments that were designed and fabricated to the requirements of AISC/AWS. When invoked, NCIG provisions will be implemented as indicated in section 3.6.8.

3.8.4.3 Loads and Loading Combinations

3.8.4.3.1 Description of Loads

See Tables 3.8.4-1 through 3.8.4-17 for the loads of other Category I structures. Other Category I structures are in general subject to the same natural phenomena and basic dead, live, and earth pressure loading as described for the Shield Building in Section 3.8.1.3.

Construction loads differed for the Auxiliary Building because of the multistory effect of shoring from one floor to the next and the construction crane loading on the Control Building portion. The maximum temperature gradient for walls above grade with exterior exposure is the same as

the normal operating temperature gradient of the Shield Building. The design stresses induced by this temperature gradient are insignificant. The spent fuel pit and fuel transfer canal require additional temperature considerations. Under accident conditions the water is assumed to reach 212°F in 8 hours with the inside building temperature initially at 60°F. The normal temperature of the water in the fuel pit and canal is 120°F.

Hydrostatic pressure loads in the fuel pit and canal vary with water levels, either of which may be full or empty. A hydrostatic pressure load from either the fuel pool or cask loading area being drained is not included in the design of the interior wall of the spent fuel pool. The wind and tornado loading are described in Section 3.3. Blowout panels are necessary to restrict the tornado generated pressure differential to 100 lbs/ft^2 above the 734 floor in the Auxiliary Building and 72 lbs/ft^2 in the east valve room.

For initial design, the live load associated with supports and restraint anchorages for cable trays, piping systems, and other fastenings to interior masonry walls was restricted to a maximum of 20 lbs/ft^2 over the face of the wall.

A 1730-lbs/ft^2 surcharge loading was applied to the A1 and A15 line walls as a construction loading in the Auxiliary Building.

3.8.4.3.2 Load Combinations and Allowable Stresses

See Tables 3.8.4-1 through 3.8.4-17 for the loading combinations and allowable stresses.

Except for the Refueling Water Storage Tank foundation, Condensate Demineralizer Waste Evaporator building, additional equipment buildings, and ERCW Pumping Station, which were originally designed by the strength method per ACI 318-71, and two walls in the west steam valve room which have been reevaluated as specified in Section 3.8.4.4.1, the normal allowable stresses of ACI 318-63 were used in the original design for the basic loading combination of dead, live, earth pressure, hydrostatic ground water to Elevation 687 (or full pool water levels in the spent fuel pit) and effects of normal temperature gradients.

For additional loads such as induced moments or shears resulting from 1/2 SSE, accident pressure loading caused by a LOCA or steam pipe rupture and thermal effects corresponding to the accident conditions, a 25 percent increase in steel stress was allowed with concrete stresses restricted to normal allowables.

For construction loading instead of normal live loading or for flood water to Elevation 700 a 35 percent increase in both steel and concrete stresses was allowed.

For the combination of the basic loads with SSE effects, or tornado wind loads and associated missiles, or PMF loads, or impact loadings from jet impingement or jet loading on pipe restraints in conjunction with accident pressures a 67 percent increase in normal concrete stresses was allowed with steel stresses allowed to reach 0.9 of yield.

The maximum lateral forces generated by the SSE are transmitted to the base through shear walls which are designed in accordance with Section 2631 (c) of the "Recommended Lateral Force Requirements and Commentary" of the Seismology Committee, Structural Engineers Association of California, 1968.

As loading requirements and regulations change during the life of the plant, structures may be evaluated using later revisions of ACI 318. These evaluations shall use either the working stress design method (WSD) or the ultimate strength design method that was used in the original design of the structure. However, the live load verification program shall be completed using the load combinations and concrete design code specified in SQN-DC-V-1.3.3.1. In addition, SQN-DC-V-1.3.3.1 shall be used for the design of new building structures that are added.

3.8.4.4 Design and Analysis Procedures

The masonry walls are designed according to Sequoyah Nuclear Plant Design Criteria for Reinforced Concrete Block Walls, SQN-DC-V-1.1.1, which is outlined in Appendix 3.8E.

As a result of Integrated Design Inspection (IDI) item D4.3-9, representative "worst case" reinforced masonry walls were determined by a comparison of all such walls in Category I structures (height, thickness, restraint, boundary conditions, etc.) using the wall drawings and then evaluated. This evaluation consisted of analyzing the walls for the governing load combinations of TVA design criteria SQN-DC-V-1.1.1 using the allowable stresses of NUREG 0800, Section 3.8.4, Appendix A. The analysis included the effects of openings in the walls. The evaluation found the walls to be acceptable for restart. Upon completion of post-restart work (CCTS #NC0870361086), all reinforced block walls in all Category I structures, are in full compliance with NUREG 0800 allowables.

3.8.4.4.1 Auxiliary Control Building

Control Bay Portion

This concrete structure was originally designed in two stages in accordance with the ACI Building Code 318-63 using the elastic working stress theory. The loads, loading combinations, and allowable stresses used are given in Section 3.8.4.3.2.

Each stage of the two stage construction of the control bay was investigated for the controlling design conditions. The principal steel requirements for the Stage I construction was controlled by Stage I loading conditions. Only the dowel steel tying the Stage I and II construction together was controlled by Stage II loading conditions even though Stage I loading conditions do not include earthquake or tornado loads. The structure is founded on a 2-foot-thick-minimum concrete subpour. During Stage I construction the roof slab acted as a membrane stiffener for the top longitudinal sprandrel beams. These spandrel beams together with the roof slab formed a horizontal I-beam which spans between the end walls of the building. The beams were the flanges and the roof slab was the web of this long beam.

The support columns were thereby prevented from significant deflection in the transverse direction under wind load or crane sluing load. Before the roof slab was placed, columns were

held by temporary cross bracing during construction. The Stage I structure was designed as a freestanding reinforced concrete frame.

Stage II construction consisted of interior slabs, columns, and section of walls between main columns. Adequate dowels are provided for these sections. With Stage II construction, the control bay structure is an integral part of the Auxiliary Control Building. Floors and walls of the Auxiliary Building are continuous with the control bay east wall. Dowels and shear keys are provided in the Stage I and II control bay structure to provide for this structural continuity. The main portions of the building are designed by ICES STRUDL-II.

Procedures used to design the structural steel framing were based on simple beam and column construction as covered in AISC "Specification for the Design, Fabrication, and Erection of Structural Steel for Buildings," Part 1 with Type 2 framing connections. The beam-to-beam and beam-to-column connections were typical AISC double angle connections as required by the beam reactions, using either rivets or high strength bolts. Transfer of loads into the concrete structure was through bearing plates.

Control Room Shield Doors

The doors were designed assuming that the entire dead load is carried by the two vertical members in the door directly under the trolleys and the vertical load from the lead shot was acting horizontally on the side and skinplate panels.

The end panels were designed as a fixed beam with uniform load while the skinplate was designed as a square flat plate stayed at the four corners. The top and bottom members of the door were considered as simple beams.

Earthquakes are the only natural environmental condition which applies to the doors. Being inside the control room, the doors are protected from outside elements.

For design the earthquake loads for the various parts consisted of the loads produced by a SSE. Accelerations due to a SSE are greater than those due to 1/2 SSE by a factor of 2. Since the comparable allowable stress levels have a ratio of 1.75, it is obvious that the SSE controls the design.

Earthquake loads used in design of door and dogs were the loads produced by SSE having peak accelerations at floor Elevation 732.0 in the Control Building as follows:

Lateral (north-south)	- 0.60 g
Lateral (east-west)	- 0.64 g
Vertical	- 0.13 g

The accelerations were used as static loads for determining component and member sizes. After establishing the component and member sizes, a dynamic analysis, using appropriate response spectra, was made of the door and dogs to determine that the allowable stresses had not been exceeded.

In addition, the monorail located above the shield doors is designed to provide seismic support for the shield doors in the undogged (unbolted) configuration.

Auxiliary Building Portion

This concrete structure was originally designed according to the ACI Building Code 318-63 and the stresses are determined by the working stress method for the principal design cases as shown in Section 3.8.4.3.2. Stresses resulting from the static analysis are combined by the method of superposition with stresses resulting from moments, shears, deflections, and accelerations determined by the dynamic earthquake analysis described in Section 3.7.2. The exterior concrete walls above grade are designed to resist the tornado generated missiles as described in Section 3.5.

The condition of rapid depressurization during a tornado is provided for in the following manner. The exterior part of the building is designed for an internal positive pressure of 3 lb/in^2 occurring in 3 seconds with the following exceptions:

1. The area above the refueling floor at Elevation 734.0, as shown by Figure 1.2.3-1, is designed with blowout panels which open at 36 lbs/ft^2. The purpose of these blowout panels is to limit the tornado generated pressure differential on the roof of the refueling room to 100 lbs/ft^2.

2. The area below the 763 roof elevation is vented from openings in the roof. The roof and walls housing this area are nevertheless designed for 3 lb/in^2. The floor at Elevation 749 below this roof is also designed for an uplift of 3 lb/in^2 recognizing the venting of the area above this floor.

3. The heating and ventilating rooms at Elevation 714.0 (see Figure 1.2.3-4) are vented by the air intakes on the exterior walls. This results in the floor, roof, and interior walls of these rooms being designed as exterior members for 3 lb/in^2 pressure.

The exterior walls below grade Elevation 705 $\pm$ are designed for earth pressures. The exterior walls on the north and south ends of the Auxiliary Building are designed as cantilevered retaining walls from Elevation 665 to Elevation 688 $\pm$. These walls were built early before any adjacent walls and slabs to allow the construction field force to backfill and have early access to the area at Elevation 688 $\pm$. The lateral earth pressures are calculated using Coulomb theory and values as given in Section 3.8.1.3.6.

The exterior wall at the east end of the building, with five buttress walls framing into it, is designed for earth backfill from Elevation 665 to Elevation 704 $\pm$ to allow for placement of the 706 slab on grade.

Horizontal seismic forces are resisted by shear walls with the floor slabs and roof acting as diaphragms. Only those walls parallel to the seismic motion are assumed to resist that motion.

The total shear at any level is proportioned among the shear walls in accordance with the method in Portland Cement Association Publication T18-4, "Analysis of Small Reinforced Concrete Buildings for Earthquake Forces," Pages 30-32.

For the SSE, an allowable ultimate shear stress of 5.4 ϕ f'_c was used. This is the value specified in the SEAOC Code in Section 2631 (c) for walls with a height to width ratio less than one, as is the case for this structure. For the 1/2 SSE, an allowable value of one-half of the above is used. As can be seen in Section 3.8.4.5.1, the calculated shearing stresses do not exceed these values.

Main steam and feedwater pipes penetrate the exterior walls of the west steam valve room. These penetrations furnish pipe restraints through flued heads embedded in the walls. The flued head separate the pipe from the concrete which reduces the heat transfer to the concrete.

The Primary Structural Support System was designed as a Flat Slab Floor System with concrete columns. Large openings that required separate design are framed with beams. The thickness for many slab sections throughout the building is determined by shielding requirements. The general thickness and live load requirements for the original design of the different slab areas are shown on Figure 3.8.4-1.

The major portion of the building slabs are designed using the ICES STRUDL-II computer program. Moments and shears for small frames, beams, and one-way slabs were obtained by the moment distribution method. Where slabs act as two-way slabs due to walls or beams below, moments and shears were determined by use of method 2 of Appendix A in ACI Code 318-63.

The minimum percentage of reinforcing in the slabs is 0.15 percent in the top face of 0.18 percent in bottom face.

The roof slab at Elevation 763.0 is designed for 3 lb/in^2 uplift pressure as a flat slab using the ICES STRUDL-II computer program.

The roof at Elevation 778 is also designed for 3 lb/in^2 uplift pressure using the ICES STRUDL-II, Finite Element Method.

In the interior of the building there are many areas around equipment that require shielding which is provided by poured-in-place concrete walls. To permit equipment installation the construction of the shielding walls was delayed until the building frame and floor construction was completed and equipment was installed. Where possible, some walls were utilized as structural members and constructed with the building frame. These walls contain minimum steel percentages in the horizontal and vertical directions as specified by the TVA Temperature and Shrinkage Standards and the ACI Code 318-63, Section 2202 (f). These walls were checked for stresses resulting from seismic loading; however, seismic stresses did not control.

The thick concrete walls of the spent fuel pit and transfer canal are required for shielding. They are shown in Figure 1.2.3-8. The base slab is approximately 20 feet thick resting on a 2-foot-minimum concrete subpour placed on sound rock. The walls and base slab are built integrally with the slabs and walls of the Auxiliary Building. A structural wall separates the cask loading area from the spent fuel storage area. The design of the pool walls take into account hydrodynamic effects of the water and temperature stresses caused by a postulated failure of the Spent Fuel Cooling System. This structure was designed by moment distribution methods. The stresses in the

walls between the spent fuel pit and fuel transfer canal and those between the spent fuel pit and cask loading area were checked by the ICES STRUDL-II, computer program to determine the effect of the slot in the walls.

Railroad Access Hatch Covers

Structural members for the covers were designed as simple beams. Members of the embedded frame were considered as being rigidly supported by concrete. Loads from the embedded frame are transferred to the concrete by embedded anchors.

The earthquake forces, specified as follows, for design were determined by dynamic analysis including amplification through the supporting structure.

Accelerations at Elevation 734.0 for the SSE were as follows:

Lateral (north-south)	0.32 g
Lateral (east-west)	0.38 g
Vertical	0.54 g

These accelerations were used as static loads for determining component and member sizes. After establishing the component and member sizes, a dynamic analysis, using appropriate response spectrum was made of the covers to determine that allowable stresses had not been exceeded.

Railroad Access Door

The horizontal structural members of the door were designed as simple beams with uniformly distributed loads. The end reactions from these members were then transferred to the door end posts as concentrated loads located between rollers. As a conservative design, it was assumed that one roller was not in contact with the track and that the loading from the two horizontal members with the highest reactions was carried by the two adjacent rollers.

The skin plate for the door was designed, without regard to support of the plate from diagonal stiffeners, for the largest open rectangle within the structure. The plate was assumed to be a rectangular diaphragm with fixed edges.

The embedded door frame is rigidly supported by concrete. The portions of the frame which form the door track were designed as cantilever members with loading as applied by the door rollers.

The structural members of the steel enclosure above the door were designed as simple beams and the hoist supports as cantilevers from the Auxiliary Building wall.

Earthquake loads used in design of the door, frame, and track were the loads produced by a SSE having peak accelerations at ground level Elevation 706.0, which is the bottom of the door, as follows:

Lateral (north-south)	0.26 g
Lateral (east-west)	0.28 g
Vertical	0.12 g

Earthquake loads used in design of the hoist supports and enclosure were the loads due to accelerations at the hoist platform, Elevation 750.0, produced by a SSE. These accelerations were determined by dynamic analysis of the Auxiliary Building structure and were as follows:

Lateral (north-south)	0.38 g
Lateral (east-west)	0.44 g
Vertical	0.16 g

These accelerations were used as static loads for determining component and member sizes. After establishing the component and member sizes, a dynamic analysis, using appropriate response spectra, was made of the door, embedded frame, door track, and hoisting unit enclosure to determine that allowable stresses had not been exceeded.

Manways in the RHR Sump Valve Room

In the closed position, each door was considered as a structure supported around the periphery. In the open position, each door was considered as a cantilevered structure with the hinges and hinge anchorages being designed for their loading from the door in the open position. Each embedded frame was considered as being rigidly supported by concrete. Loads from the embedded frame are transferred to the concrete by embedded anchors.

Earthquake loads used in designing the manways were the forces due to accelerations determined for the sump valve room walls at the center of the manways by dynamic analysis of the Auxiliary Building for a SSE. These forces were used as static loads since the manways are rigid and firmly secured to the walls when closed.

Accelerations for a SSE are as follows:

Lateral (north-south)	0.18 g
Lateral (east-west)	0.18 g
Vertical	0.12 g

Pressure Confining Personnel Doors

Structural members for the doors, in the closed position, were designed as simple beams with end reactions carried by the outside members to the frames which were considered as being rigidly supported by concrete. Loads are transferred to the concrete through embedded anchors or bolt anchors.

In the open position, the doors were designed as cantilever structures with resultant concentrated loads being used for design of the hinge members.

For design, the earthquake loads for the various doors consisted of the loads produced by a SSE.

Earthquake forces due to building accelerations at the elevation of the center of gravity of the various doors were used as static loads for determining door component and member sizes. The building accelerations were determined by dynamic analysis including amplification through the

supporting structures. After establishing the component and member sizes, a dynamic analysis, using appropriate response spectra, was made of the doors to determine that allowable stresses had not been exceeded.

Spent Fuel Pool Gates

The gates are designed for a waterhead load of 25.42 feet imposed from the spent fuel pool side as measured from the centerline of the horizontal bottom seal to the normal pool level at elevation 726 feet 1-1/2 inches. The gates are constructed of welded corrosion resistant steel. When dewatering the fuel transfer canal, inflatable elastomer seals provide a watertight seal between the skin plate and the pool wall liner face. The fuel cask gate is to be in its stored position (open for use).

The gates have been analyzed for the effects of the OBE and SSE for both the operating and stored position. The gates are designed to maintain their sealing and structural integrity during and after an SSE. Earthquake loading considers simultaneous vertical and horizontal dynamic forces that act on the gates when there is water on both sides or for the fuel canal gate when there is water on the fuel pool side only. The gates are restrained by guides at the top, mid-height, and bottom. When in the storage position, the gates are horizontally restrained by top and bottom guides and vertically supported by hanger brackets.

Accelerations for an SSE are as follows:

North-south	0.32 g
East-west	0.36 g
Vertical	0.12 g

West Steam Valve Room

Two walls in the West Steam Valve Room have been reevaluated using an elasto-plastic dynamic analysis and yield line theory to determine the ultimate capacity of the walls. The walls have been reevaluated for the load combinations specified in Table 3.8.4-1 and are in conformance with the requirements of Appendix C of ACI 349-76 and NRC Regulatory Guide 1.142.

Waste Packaging Area

The base slab is designed to be supported by a bearing pile foundation as discussed in Section 2.5. The walls are designed to cantilever during construction and to be hinged at the joint on top after the top slab has been placed. The reinforcing steel in the top face of the roof slab was designed for temperature and shrinkage.

Condensate Demineralizer Waste Evaporator Building Portion

This two story structure was designed using the loads, loading combinations, and allowable stresses as given in Tables 3.8.4-1 and 3.8.4-2. The concrete portion was designed in accordance with the ACI 318-71 Building Code and the structural steel portion in accordance with AISC "Manual of Steel Construction," Seventh Edition. The building is designed to be

supported by a bearing pile foundation, with the piles founded on sound rock as discussed in Section 2.5. The intermediate floor and roof are supported by interior bearing walls and metal decking spanning between steel beams.

Additional Equipment Building Portion

These concrete structures were designed in accordance with ACI Building Code 318-71 using the loads and loading combinations as given in Table 3.8.4-1. The Unit 2 Building was designed for four stories above the base slab and Unit 1 for two stories above the base slab. The buildings consist of reinforced concrete exterior walls, slabs, and interior columns. For each building, all horizontal forces are transmitted through the floors and roof slab as diaphragms to the exterior shear walls and thence to the foundation base slab. The columns and exterior walls transmit the vertical loads to the base slab.

The building foundations are reinforced concrete wall grid systems which start beneath the base slab and extend down to reinforced concrete foundation slabs placed on sound rock. Weep holes are provided in the foundation walls to relieve possible buildup of hydrostatic pressure. Earthfill was placed within the Foundation Wall System to equalize external soil pressures and to support the base slab at Elevation 706 during placement.

The major walls and slabs of these structures were analyzed by STRUDL computer programs using plate-bending finite elements and grid members.

3.8.4.4.2 Condenser Water Supply Pumping Station, and Retaining Walls

Pumping Station

The box-type structure is analyzed by parts using moment distribution and PCA Structural Bulletin ST 63 for Design of Rectangular Concrete Tanks. The working stress method of design is used for all parts other than the missile barrier walls which are designed for ultimate strength.

The top slab is analyzed as a continuous two-way slab supported monolithically on the walls of the structure. A 164-kip mobile crane outrigger load placed any point upstream of the centerline of the condenser circulating water pumps is considered in the analysis.

The back wall of the pumping structure is analyzed as a one-way slab spanning horizontally between the pilasters of the back wall. The pilasters are analyzed as T-beams spanning between the base and the top slab.

The side walls are analyzed as continuous two-way slabs supported at the base, the top deck and at the front and back walls of the structure.

The front wall or stoplog is designed as a slab restrained on three edges and free on the other edge. This wall is designed to resist tornado loadings.

The base slab is analyzed as a two-way slab founded on rock.

The thick interior pump bay walls are analyzed in two parts. The thin 2-foot-thick portion of each pump bay wall is designed as a beam spanning horizontally between the massive, thick portion of the wall and the front wall of the pump well and valve room. The massive portion of each interior pump bay wall is designed as a beam spanning between the base slab and the top slab of the structure.

The front wall of the pump well and valve room is analyzed as a two-way slab.

The missile barrier walls anchored to the top slab of the structure are analyzed as cantilevers and designed using ultimate strength design.

The structure was investigated as a whole to ensure continuity of design. Reinforcement is proportioned to restrict crack widths in the top slab over the electrical equipment room to approximately 0.005 inch. In the remainder of the structure reinforcement is proportioned for service conditions to restrict crack width to approximately 0.010 inch. The structure was also investigated for stability against overturning, floating, and sliding.

In addition, the structure is designed to resist the pressure differential during a tornado and to maintain its stability under all conditions. Factors of safety for overturning, flotation, and sliding are listed in Table 3.8.4-3.

Retaining Walls

The structures were analyzed as cantilever walls founded on rock and originally designed in accordance with the ACI 318-63 Building Code. The factors of safety against overturning and sliding are listed in Table 3.8.4-4.

3.8.4.4.3 Diesel Generator Building

The structure was analyzed as a box-type structure assuming all walls fixed at the base slab, Elevation 722.0. The frame was analyzed by the moment distribution method. The 740.5 elevation floor and the Elevation 753.5 roof are one-way slabs continuous across interior walls and restrained at exterior walls. All horizontal forces are transmitted through the floor and roof slabs as diaphragms to parallel shear walls and thence to the foundation base slab as discussed in Section 3.8.4.4.1 for the Auxiliary Building.

The base slab distributes superstructure loads uniformly to the supporting soil and was analyzed as a flat slab.

Diesel Generator Building Doors and Bulkheads

Structural members for the doors and bulkheads were designed as simple beams. The skin plates were designed as square or rectangular diaphragms with all edges fixed. The crushable strips for energy absorptions were considered as being collapsible.

The design of the doors and bulkheads was by TVA without the use of a computer program. Design of members in crushing strips was based on tests made by Oak Ridge National

Laboratory. Results of these tests are recorded in their publication titled "Structural Analysis of Shipping Casks, Volume 9, Energy Adsorption Capabilities of Plastically Deformed Struts Under Specified Impact Loading Conditions."

Earthquake loads used in designing the doors and bulkheads were the accelerations determined for ground level Elevation 722.0, which is the bottom of the doors, for a SSE as follows:

Lateral (north-south)	0.74 g
Lateral (east-west)	0.74 g
Vertical	0.28 g

These accelerations were used as static loads for determining component and member sizes. After establishing the component and member sizes, a dynamic analysis was made of the doors and bulkheads.

The precast concrete bulkheads covering the doors were analyzed for missile impact loads. In establishing the required thickness of the precast concrete bulkheads, consideration was not given for the structural doors and the concrete bulkheads were designed to absorb full missile impact. Sections 3.5 and 3.8.4.1.3 discuss the missile requirements of precast bulkheads in more detail.

3.8.4.4.4 Category I Water Tanks and Pipe Tunnels

Water Tanks

See Section 3.8.4.1.4 for a description of the Refueling Water Storage Tanks. See Section 3.8.5.1.2 for a description of the foundations and Section 3.8.5.4.6 for a description of the design and analysis procedures for the tank foundations. Chapter 6 discusses the functionality requirements for the tanks.

Pipe Tunnels

The pipe tunnels were analyzed using a standard frame analysis and designed in accordance with the provisions of the ACI 318-63 Building Code.

3.8.4.4.5 Class 1E Electrical Systems Manholes and Handholes

The structures were designed using the provisions of the ACI 318-63 Building Code and the working stress design method.

3.8.4.4.6 East Steam Valve Room

The concrete structure is analyzed as an open box structure. The main steam and feed water lines exit from the 4-foot-thick north wall where restraints for these lines are anchored. Pipe restraints are also located in the 5-foot-thick interior wall in the south end as well as in the 6.5 foot by 10-foot-deep beam portion of the east wall. The 5-foot interior wall at the south end

stiffens the 1.5-foot-thick south exterior wall. The 1.5-foot-thick east wall spans horizontally between the stiff complex of end walls and vertically from the base slab to the 6.5-foot- thick portion. The walls were investigated using STRUDL flat plate and grid computer programs.

Stability of the structure was also investigated in the analysis. The base slab was backfitted with caissons into rock after experiencing some settlement problems.

Design procedures for the roof steel were based on simple beam construction as covered in AISC "Specifications for the Design, Fabrication, and Erection of Structural Steel for Buildings," Part 1 with Type 2 framing connections. The metal decking was attached to structural steel with four screws per sheet and designed to fail and blow off when the internal pressure at the roof reaches 72 lb/ft^2.

3.8.4.4.7 ERCW Pumping Station and Access Cells

The ERCW pumping station and access cells were analyzed using conventional structural analysis method. In accordance with ACI 318-71 Code and subsequent addenda, the ultimate strength method of design was used in the design of the structures.

The top two floors of the ERCW pumping station were analyzed as continuous slabs supported monolithically on the walls of the structure. The bottom floor was analyzed as a continuous slab supported in the middle by the concrete foundation and cantilevered at the corners. The side walls were analyzed as continuous slabs supported at the base, the top, and at the front and back walls of the structure. The missile barrier walls anchored to the top floor of the structure were analyzed as cantilevers. McDonnell - Douglas Strudl and General Electric Structural Engineering solver computer programs were used for analytical purposes.

The structures were investigated to ensure continuity of design. The structures were also investigated for stability against overturning, floating, and sliding. The pile supported ERCW support slab was analyzed horizontally as a series of segmented slabs and was designed for the maximum moment induced in any one segment. The electrical conduit bank was analyzed as a continuous slab. Vertically, both the slab and conduit bank were designed for seismic response plus deadweight.

3.8.4.5 Structural Acceptance Criteria

3.8.4.5.1 Concrete

The Category I structures were proportioned to maintain elastic behavior and stresses within stress allowables when subject to the loading combinations of Section 3.8.4.3. Two walls in the west steam valve room have been reevaluated as specified in Section 3.8.4.4.1 and utilized a ductility ratio of 3.3.

In the condenser cooling water pumping station the maximum shear stress for earthquake forces based upon the original design was 52 lb/in^2.

A maximum shear stress from the SSE of 178 lb/in^2 occurs at the base of the west wall of the Diesel Generator Building. Considering only those wall portions with height to depth ratios of less than one this is less than 71 percent of the allowable.

The stresses in shear walls parallel to the direction of the lateral earthquake forces in the Auxiliary Building are as follows (see Note):

Elevation	Maximum Calculated Stress Safe Shutdown Earthquake		Allowable Stresses (lbs/in^2)
	North-South	East-West	
669-690	146	112	250
690-714	104	120	250
714-734	98	90	250
734-749	90	96	250
749-763	92	62	250
763-778	176	114	250
Above 778	234	60	250

Note: This table is based upon original design calculations and does not reflect later evaluations. These evaluations were due to changes in loading, concrete evaluations, or modifications, and were documented in calculation packages.

Stresses for 1/2 SSE are one-half of those tabulated. Earthquake shear stresses were insignificant in all other structures.

All Category I structures are essentially low profile box structures with height to base ratios less than 1.0 and a high factor of safety against sliding or overturning under the most severe loading conditions. In addition, all structures are sufficiently heavy that there is no flotation problem under maximum flood conditions.

3.8.4.5.2 Structural Steel

Structural steel and welds are designed in accordance with AISC "Manual of Steel Construction," Seventh Edition, for Case I loading condition so that the stress in the members and connections do not exceed the allowable stress criteria as set forth in the February 1969, AISC "Specification for Design, Fabrication, and Erection of Structural Steel for Buildings." For the factor of safety of these allowable stresses with respect to specified minimum yield point of the material used, see Section 1.5 of "Commentary on the Specification for the Design, Fabrication, and Erection of Structural Steel for Buildings." Both specification and commentary are included in the AISC "Manual of Steel Construction."

For Case II loading condition the actual stresses do not exceed the allowable stresses as set forth in Table 3.8.4-2. The allowable stresses for Case II loading have a minimum factor of safety of 1.11 based on the specified minimum yield point of the material used.

3.8.4.5.3 Miscellaneous Components of the Auxiliary Building

Control Room Shield Doors

Allowable stresses for all load combinations used for the various parts of the door and dogs are given in Table 3.8.4-5. For normal load conditions the allowable stresses provide a safety factor of 2 to 1 on yield for structural parts and 5 to 1 on ultimate for mechanical parts. For the limiting condition of SSE, stresses do not exceed 0.9 yield.

Railway Access Hatch Covers

Allowable stresses for all load combinations used for the various parts are given in Table 3.8.4-6. For normal load conditions, the allowable stresses provide safety factors of 2 to 1 on yield for structural parts and 5 to 1 on ultimate for mechanical parts. For limiting conditions such as a SSE, stresses do not exceed 0.9 yield.

Railroad Access Door

Allowable stresses for all load combinations used for the various parts of the door, embedded frame, and hoist enclosure are given in Table 3.8.4-7. For normal load conditions the allowable stresses provide a safety factor of 2 to 1 on yield for structural parts and 5 to 1 on ultimate for mechanical parts. For limiting conditions, such as SSE and hoist stall, stresses do not exceed 0.9 yield.

Manways in RHR Sump Valve Room

Allowable stresses for all load combinations used for the various parts are given in Table 3.8.4-8. For normal load conditions, the allowable stresses provide safety factors of 2 to 1 on yield for structural parts and 5 to 1 on ultimate for mechanical parts. For limiting conditions such as a SSE, stresses do not exceed 0.9 yield.

Pressure Confining Personnel Doors

Allowable stresses for all load combinations used for the various parts are given in Table 3.8.4-9. For normal load conditions, the allowable stresses provide safety factors of 2 to 1 on yield for structural parts and 5 to 1 on ultimate for mechanical parts. For limiting conditions such as SSE, flood, and tornado loadings, stresses do not exceed 0.9 yield.

Spent Fuel Pool Gates

Allowable stresses for all load combinations used for the gates are given in Table 3.8.4-18. For normal load conditions the allowable stresses do not exceed 0.6 of yield. For limiting conditions such as the safe shutdown earthquake the stresses do not exceed 0.96 of yield since load case 4 is the governing condition.

3.8.4.5.4 Diesel Generator Building Doors and Bulkheads

Load combinations and allowable stresses for all combinations are given in Table 3.8.4-10. For normal load condition, the allowable stresses provide safety factors of 2 to 1 on yield for

structural parts and 5 to 1 on ultimate for mechanical parts. For limiting conditions stresses do not exceed 0.9 yield.

In the original design, missile protection was to be provided by the steel doors and bulkheads. The following paragraph describes the basis for that design and is provided for historical purposes.

For impact from missiles, the doors and bulkheads may deform but will stop missiles D1, D2, and D3 of spectrum D (Table 3.5.5-5) and remain in position. For missiles larger than those listed, it was assumed that these missiles would be dispersed so only one of the four doors or bulkheads would be struck severely enough for its diesel generator to become inoperable. Redundancy of the diesel generating units allows this loss.

Sections 3.8.4.1.3 and 3.5.5 discuss the upgrading of the missile spectrum for the equipment access openings to include missiles D4, D5, and D6 of spectrum D. Additional protection has been provided in the form of precast concrete bulkheads placed in front of the existing doors. The existing doors as will function as barriers to prevent scabbed particles from the concrete bulkheads entering the diesel generator compartments.

3.8.4.6 Materials, Quality Control, and Special Construction Techniques

3.8.4.6.1 Materials

General

The following materials were used in the construction of other Category I structures:

1. Concrete.
2. Reinforcing steel.
3. Miscellaneous structural steel.
4. Wood.

Concrete

Concrete work was the same for other Category I structures as performed for the interior concrete structures and described in Section 3.8.3.6.1, except that concrete strength requirements were generally less. In general the following concrete strength requirements were used:

Fill Concrete - 2000 lbs/in^2 at 90 days. This concrete class was used to replace overexcavated rock and to protect excavated areas from possible contamination or decomposition from weathering during construction.

Structural Mass Concrete - 3000 lbs/in^2 at 90 days. This class of concrete was principally used in massive wall and base slab pours where reinforcing steel requirements for flexure were less than 0.6 percent and where it was generally desirable to restrict the hydration heat rise of the concrete.

Normal Structural Concrete - 3000 lbs/in^2 at 28 days. This class of concrete was used in superstructure floors and in thin walls generally less than 18 inches thick.

Reinforcing Steel

See Section 3.8.1.6.

Structural Steel

See Section 3.8.1.6.

3.8.4.6.2 Special Construction Techniques

The structures were built in accordance with standard construction techniques.

3.8.4.6.3 Quality Control

The concrete quality requirements applied to other Category I structures were the same as provided in section 3.8.1.6.2 for the concrete shield building.

Some concrete mixes did not meet the TVA General Construction Specification No. G-2 requirement for strength during some time periods. The percent of tests less than the specified strength exceeded the G-2 requirement of 10 percent. All concrete pours placed during "low strength" time periods were evaluated.

The "low strength" periods for the mixes with specified strengths of 3000, 4000, and 5000 psi at 28 days were evaluated by determining estimated inplace design strengths based on the size of the member and the long-term strength gain based on a site testing program. The structure was evaluated for a reduced design strength if the inplace strength was less than required by the calculations or less than specified on the design drawings. The estimated inplace strengths were also verified by the results of 90 day strength tests on standard cured cylinders made at the time of the concrete placement.

A concrete mix with a specified strength of 8000 psi at 90 days was used for some walls in the valve rooms. This mix did not generally achieve the required strength. An evaluation of the strength results was performed and the structures evaluated for reduced equivalent specified strengths (6800 psi to 7600 psi depending on the time period).

The Control Room shield doors, railway access hatch covers, railroad access doors, manways in the RHR Sump Valve Room, and the pressure confining personnel doors were designed and erected by TVA in accordance with TVA's Quality Assurance Program. Design and fabrication by the Contractor were in accordance with the Contractor's Quality Assurance Program which was reviewed and approved by TVA's Design Engineers. The Contractor's Quality Assurance Program covers the criteria in Appendix B of 10 CFR 50.

Fabrication procedures such as welding and nondestructive testing were included in appendices to the Contractor's Quality Assurance Program.

ASTM standards were used for all material specifications and certified mill test reports were provided by the Contractor for materials used for all load carrying members.

Although the fuel pool gates were not procured under a formal QA program, TVA has determined that minimum QA standards were followed in the construction of these gates.

3.8.4.7 Testing and Inservice Surveillance Requirements

3.8.4.7.1 Concrete and Structural Steel Portions of Structures

A program to monitor the settlement of the Diesel Generator Building was instigated. See Section 2.5 for information concerning settlement readings.

3.8.4.7.2 Miscellaneous Components of the Auxiliary/Control Building

Control Room Shield Doors

After erection and adjustment the doors were inspected for proper operation of the dogs and free movement on the trolleys.

After the initial inspection, periodic visual inspections of the doors are to be made. Parts inspected during these visual inspections are to include all bolted connections, structural members for paint deterioration, connections to trolleys, and dogs.

Railway Access Door

Prior to shipment of the door from the Contractor's plant, the splice welds in the skin plate of the door and welds among the periphery of the skin plate and structural members were magnetic particle tested.

After completion of the initial tests and inspections, periodic visual inspections of the door and its parts are to be made. Parts inspected are to include all bolted connections, limit switches, door tracks, and rollers. Painting is to be inspected for evidence of deterioration, and the seals are to be carefully inspected for cracks, blemishes, or any other indications of deterioration of the rubber.

Manways in RHR Sump Valve Room

After completion of erection and adjustments, the manways were checked for leakage by pressurizing the space between the sealing rings on each door to 30 lbs/in^{2}g (125 percent design pressure). The test pressure was applied to the seals for 30 minutes with no detectable leakage. Individual compartments of the sump valve rooms were also pressure tested.

Pressure Confining Personnel Doors

After the initial inspection, periodic visual inspections of the doors are to be made. Parts inspected during these visual inspections are to include all bolted connections, structural members for paint deterioration, latching or dogging mechanisms and limit switches for physical condition, and the seals. The seals are to be carefully inspected for cracks, blemishes, or any other indications of deterioration and for proper seating at the sealing surfaces.

Spent Fuel Pool Gates

After initial inspection, periodic visual inspection of the gates are to be made. The seals are to be carefully inspected for cracks, blemishes, or any other indications of deterioration.

3.8.4.7.3 Diesel Generator Building Doors and Bulkheads

All parts of the doors and bulkheads are to be inspected at periodic intervals for free operation, paint deterioration, and weld condition.

3.8.4.7.4 ERCW Pumping Station and Access Cells

The initial program to monitor settlement of the ERCW Pumping Station and access cells is discussed in Section 2.5.5.3.2.

3.8.5 Foundations and Concrete Supports

3.8.5.1 Description of Foundation and Supports

3.8.5.1.1 Primary Containment

The primary containment foundation consists of a 9-foot-thick-circular reinforced concrete structural slab 131 feet 7 inches in diameter anchored to bedrock by a concentric pattern of 155 No. 11 reinforcing bars grouted 15 feet into rock near the outer periphery of the slab. The slab is further keyed and anchored into rock in the central portion by the 8-foot-thick walls of the reactor cavity extending a total of 27 feet into rock. A 2-foot-minimum-thick concrete subpour underlies the structural concrete and caps the top of the irregular rock surface. The base rock consists of alternating layers of hard limestone and softer shale whose bedding planes are inclined which accounts for the irregularity of all excavated surfaces. This rock was pressure grouted on 10-foot centers in two stages to a depth of 45 feet to assure a solid unyielding base for support of the reactor. See Section 2.5.1.7, 2.5.1.8, and 2.5.1.10 for additional discussion of the rock base and foundation treatment.

The interior concrete structures described in Section 3.8.3 constitute the Primary Support System for all equipment in the containment structures. For steel containment vessel anchorage refer to Appendix 3.8C. All major equipment such as steam generators, reactor coolant pumps, and pressurizers are anchored through the steel liner plate into the 9-foot-thick concrete base slab. Typical anchorage details are shown on Figure 3.8.2-7.

The base liner plate is anchored to the foundation through the use of embedded "T" sections which have provisions for leveling before concrete was placed. The embedded anchors were used as screed guides during the placement of the concrete to ensure that a flat surface was obtained coincident with the top of the anchors. See Figure 3.8.2-7 for a typical detail of a base liner plate anchor. All welded joints in the base liner plate were made at anchors. All joints in the base liner plate are equipped with leak chases to facilitate testing for leak tightness. All major tensile loads are anchored through the base liner plate in such a manner as to prevent the liner from becoming a stress carrying member.

3.8.5.1.2 Foundations of Other Category I Structures

Auxiliary Control Building

All of the Auxiliary Control Building, except the waste packaging area and the Condensate Demineralizer Waste Evaporator Building portion, is supported on rock with foundation treatment as described below.

Rock excavation varied from 15 feet to 40 feet in depth in various parts of the structure. The base slab over the 2-foot-minimum-thick subpour topping the rock surface was generally 2 feet thick. It was anchored into rock to resist hydrostatic uplift pressures under flood conditions by approximately 1836 No. 11 bars and 102 No. 14 bars grouted to various depths into rock. The depth is dependent on the elevation of the slab.

The waste packaging area is separated from the rest of the Auxiliary Building by 2 inches of fiberglass expansion joint material. The 45-inch-thick base slab at grade Elevation 705 is supported on H-bearing piles.

The base slab of the Condensate Demineralizer Waste Evaporator Building is 2-foot and 6-inches thick, except for the pipe tunnel part of the building which is 2-foot and 3-inches thick. The building is supported on H-bearing piles and is separated from the rest of the Auxiliary Building by 2 inches of fiberglass expansion joint material.

The base slabs of the Additional Equipment Building portion are 18-inches thick and 24-inches thick for Units 1 and 2, respectively. These slabs are at grade Elevation 705 and rest on a grillage of reinforced concrete foundation walls and slabs supported to sound rock. These structures are separated from the Reactor Building and the rest of the Auxiliary Building by two inches of fiberglass expansion joint material.

Condenser Cooling Water Pumping Station and Retaining Walls

The setting of the intake structure required rock excavation to Elevation 645. Because of the nature of the rock neat line excavation was impossible. As a result the end piers and back wall were cast directly against the irregular sloping rock surface up to Elevation 669. The base slab varied in thickness from 2 feet to 3 feet but under normal conditions merely served as a footing to transfer loads from the configuration of walls and piers to the base rock. Foundation stresses did not warrant grouting of the base rock.

The wing walls of the intake structure are designed to protect the forebay of the intake against earth slides during an earthquake. The base slab of these cantilevered walls rests on sound rock or a leveling pour of fill concrete to sound rock. The rock walls of the forebay were covered with a 12-inch-minimum thickness of concrete to prevent possible erosion of material from joints in the rock due to washing action of water in the intake channel.

East Steam Valve Room

The East Steam Valve Room is separated from the Shield Building by 1 inch of fiberglass joint material. The base slab at grade elevation is supported by eight concrete caissons 4 foot in diameter anchored into sound rock.

ERCW Pumping Station and Access Roadway

The interlocked tremie concrete cells supporting the ERCW pumping station and the access roadway cells are founded on bedrock. The tremie concrete is contained by sheet piles. The cells are shown in Figures 3.8.4-7, 3.8.4-8, and 3.8.4-9.

The ERCW piping support slab is a pile supported structure as shown on Figure 3.8.4-9.

Diesel Generator Building

The base slab of the Diesel Generator Building is discussed in Section 3.8.5.5.2. The depth of soil above bedrock varies from approximately 65 feet to 85 feet. A thorough investigation of soil properties under this building was made to determine the sensitivity of the soil properties under dynamic loading in order to assure stability of the slopes above and below the building under earthquake loading. For settlement analysis and record, see Section 2.5.5.3 and Figure 2.5.5-1, respectively.

Refueling Water Storage Tank Foundation

The refueling water storage tank (RWST) foundation provides support for the RWST and also provides a reservoir for storage of borated water after a postulated rupture of the RWST. The foundation is of reinforced concrete construction. The foundation is 53 feet 6 inches in diameter and is approximately 2.75 feet thick. Shear keys are provided to assure no sliding displacement. The allowable settlement for the foundation is limited by the deflection allowed in the Category I piping that connects to the tank. To limit settlement, the foundation is constructed on a uniform depth of engineered granular fill. Approximately 1500 cubic yards of granular fill has been placed below each foundation. The minimum base elevation for the granular fill is at Elevation 690, or if the soil below Elevation 690 had been disturbed by previous excavation, then the uniform base elevation for the granular fill was increased to allow for removal of the disturbed soil. The minimum diameter of the granular fill below the tank foundation is 54 feet.

3.8.5.2 Applicable Codes, Standards, and Specifications

See Sections 3.8.1.2, 3.8.3.2, and 3.8.4.2.

3.8.5.3 Loads and Loading Combinations

The loads and loading combinations are described in Sections 3.8.1.3, 3.8.3.3, and 3.8.4.3.

3.8.5.4 Design and Analysis Procedure

3.8.5.4.1 Primary Containment Foundation

The foundation was analyzed as a slab on an elastic foundation (considering the properties of the rock). The slab was divided into wedge-shaped radial strips.

One wedge was analyzed with normal operating loads and an adjacent wedge was analyzed with maximum uplift load from a steam generator support. The deflections of these two adjacent wedges were imposed upon a circumferential section. The wedge sections were used to determine radial moments and shears, and the circumferential section was used to determine circumferential moments and shears. The analysis was made using computer code, "Finite Element Stress Analysis (AMG033)" described in Appendix 3.8D.

Rock properties were considered to a depth of 22 feet below the slab and 13 feet beyond the outer radius of the slab. These dimensions are of sufficient magnitude to show the effects of slab loading on the rock. Beyond these dimensions, the in situ stresses are greater than those caused by the foundation loading. End conditions for the rock are: (1) zero horizontal deflection along the vertical face and (2) zero vertical deflection along the horizontal face.

3.8.5.4.2 Auxiliary-Control Building

The Auxiliary-Control Building is designed for maximum flood conditions with water at grade Elevation 705. Under these conditions the hydrostatic uplift is greater than the dead load of the slab and anchorage into rock is required. Only the buoyant weight of rock was considered in determining the minimum depth of rock which must be engaged by anchor rods to resist uplift. Various depth anchor rods were used; however, the spacing of rods was restricted in such a manner that the buoyant weight of the rock for the full depth of the pattern of anchors was considered effective. The minimum depth of anchor was based on the maximum uplift load on the bar divided by an 80 lb/in^2 allowable bond strength on the 3-inch hole. The 2-foot base slab was designed as a flat plate to resist the maximum uplift loads between rock anchors.

The slabs of the Condensate Demineralizer Waste Evaporator Building and the waste packaging area were designed as pile supported foundations. Walls were thicker than necessary because of shielding requirements.

The slabs for the Additional Equipment Building portion are supported to rock by a grillage of reinforced concrete foundation walls and slabs extending down to rock. Weep holes are provided in the foundation walls to relieve possible buildup of hydrostatic pressure. Earthfill is placed within the Foundation Wall System to equalize external soil pressures and to support the

base slab at Elevation 706 during placement. The foundation slab was designed to resist the maximum overturning effect on the building. The walls were considered to span between bedrock, the bottom of the base slab, and other foundation walls framing into them.

3.8.5.4.3 Condenser Cooling Water Pumping Station and Retaining Walls

The design of the base slab was controlled by uplift considerations under assumed unwatered conditions with one or two bays dry and full uplift over 100 percent of the area between the slab and the base rock. The slab was designed as a flat plate to span between piers.

3.8.5.4.4 ERCW Pumping Station and Access Roadway

As shown in Figures 3.8.4-7, 3.8.4-8, and 3.8.4-9, the cofferdam cells of the pumping station and access roadway cells were originally analyzed as a single unit due to their configuration. The pumping station cells were also analyzed as a single unit. A more recent calculation was made which proved that the roadway cells were acceptable when analyzed individually. All cells were investigated for stability and analyzed seismically. The ERCW support slab was designed as a pile supported foundation.

3.8.5.4.5 Soil Supported Structures

A uniform or linear distribution of base pressure was assumed in the design of all soil supported structures and all base slabs were essentially designed as flat plates.

Pile supported structures were designed using conventional frame analysis or through the use of ICES STRUDL-II finite element computer program.

3.8.5.4.6 Refueling Water Storage Tank Foundation

The foundation was analyzed as a slab on an elastic foundation (considering the properties of the engineered granular fill and the in situ soil beneath).

3.8.5.5 Structural Acceptance Criteria

3.8.5.5.1 Primary Containment Foundation

The base slab design contained the following conservative features:

1. Reinforcement in the radial direction was designed to carry all the loads.

2. Reinforcement in the circumferential direction was designed for the maximum deflection differentials of the radial strips as if they were free to deflect.

   Considering two-way plate action the slab has almost double the load carrying capacity of the design.

3. The worst combination of steam generator, and reactor coolant pump supports were combined in the radial strip design without consideration for the counteracting jet load which must impinge upon the slab for the support uplift loads to occur.

4. The anchorage into base rock at the outer periphery was not utilized to reduce flexural stresses in the base slab.

3.8.5.5.2 Foundations of Other Category I Structures

Auxiliary-Control Building

All flexural stresses in the base slab other than those induced by restraining moments at the exterior walls are the result of hydrostatic uplift loads at the base of the slab. The close spacing of anchor rods of 4 feet to 5 feet on centers greatly reduced reinforcement requirements for flexure in the 2-foot-thick structural slab. Pullout tests were performed on eight No. 11 bars stressed to 37,500 lbs/in^2 to verify the 80 lbs/in^2 allowable bond at the contact surface of grout and rock. The depth of embedment ranged from 35 inches to 45 inches with bond stresses at the rock contact surface ranging from 144 lbs/in^2 to 160 lbs/in^2 without a failure at the contact surface. In one instance the bar did pull out of the grout at a bond stress along the bar of 356 lbs/in^2 and in another instance the stress in the bar was increased to 53,000 lbs/in^2 and bond failure along the bar occurred at a bond stress of 512 lbs/in^2.

Since the minimum depth of anchorage into rock was more than twice the tested depth the factor of safety against bond failure in the anchorage in all cases was greater than 4.

The stability of the Additional Equipment Building foundations was investigated for the controlling seismic event. The maximum actual compression on rock is 29.5 k/ft^2 (205 lbs/in ^{2}) as compared to the maximum allowable value of 500 lb/in^2. The safety factor against overturning is 1.65.

Condenser Cooling Water Pumping Station and Retaining Walls

In the Intake Pumping Station the base slab serves no real purpose as a foundation since the stress under the piers is very low and the piers could easily have rested directly on rock. The principal design feature of the base slab is to serve as a water barrier under maintenance conditions with one or two bays dewatered.

ERCW Pumping Station and Access Roadway

The ERCW pumping station cells and access roadway cells as described in Section 3.8.5.1.2 are founded on bedrock. The stresses in the concrete cells are low since the primary function of the concrete is to provide mass for stability against overturning.

East Steam Valve Room

The base slab of the East Steam Valve Room is supported by eight concrete caissons anchored into sound rock. The depth of anchorage is such that it resists any uplift or overturning forces on the structure.

Diesel Generator Building and Emergency Cooling Water Structures

These structures are situated as described in Section 3.8.5.1.2. The Diesel Generator Building consists of a 9-foot 9-inch thick base slab which distributes superstructure loads to the supporting soil medium. A concrete apron extending 13 feet from the edge of the base slab is used to decrease the bearing on the subgrade to less than the allowable capacity.

3.8.5.6 Materials, Quality Control, and Special Construction Techniques

3.8.5.6.1 Materials

Concrete and Reinforcing Steel

See Section 3.8.1.6.1 and 3.8.4.6.1.

Backfill Materials

Backfill material was taken only from areas designated by the soils investigation program (see Section 2.5) as suitable for backfill material.

3.8.5.6.2 Quality Control

See Section 3.8.4.6.3 and 3.8.1.6.2.

Base Rock

The base area of all rock supported structures was inspected by the principal Civil Design Engineer in conjunction with an experienced TVA Geologist during final cleanup of rock surfaces to determine its suitability as a foundation.

Backfill

Quality control requirements for backfill material were as specified in Section 2.5.1.11.1.

3.8.5.6.3 Special Construction Techniques

Normal construction procedures were used in the construction of all other Category I structures.

3.8.6 Category I (L) Cranes

3.8.6.1 Polar Cranes

3.8.6.1.1 Description

See Figures 3.8.6-1 through 3.8.6-5.

There are two polar cranes, one in each of the reactor buildings. Each crane is a single trolley, overhead, electric traveling type; operating on an 86-foot diameter rail at the top of the crane wall and above the reactor. Each crane has a main hoist capacity of 175 tons and an auxiliary hoist capacity of 33 tons.

The main and auxiliary hoist motions are driven by AC Variable Frequency Motor drives with eddy current brakes for emergency lowering and stepless (infinite) speed control. The bridge and trolley travel motions are driven by AC variable frequency drives and stepless (infinite) control.

Structural portions of the crane bridges consist of welded box-type girders and welded, haunched, box-type end ties. Structural portions of the trolleys consist of welded box-type trucks and welded cross girts which are bolted to the trucks.

Control of each crane is from a cab located below the bridge walkway at one end of a girder.

3.8.6.1.2 Applicable Codes, Standards, and Specifications

The following codes, standards, and specifications were used in the design of the cranes:

National Electric Code, 1970 edition

National Electrical Manufacturers Association, Motor and Generator Standards, Standard MG-1, 1970 edition.

Electric Overhead Crane Institute Specification 61, "Specifications for Electric Overhead Traveling Cranes."

Federal Specification RR-W-410a, class 3.

American Society for Testing and Materials, "Material Standards," 1970 edition.

American Welding Society, D1.0, Code for Welding in Building Construction.

Section 1.23, Part I, "Specification for the Design, Fabrication, and Erection of Structural Steel for Buildings," Manual of Steel Construction, Part 5, American Institute for Steel Construction , 6th edition, 1963. Where date of edition, copyright, or addendum is specified, earlier versions of the listed documents were not used. In some instances, later revisions of the listed documents were used where safety was not compromised.

American Gear Manufacturers Association Standards for Spur, Helical, Herringbone, and Bevel Gears.

The cranes meet applicable requirements of the listed codes, standards, and specifications.

3.8.6.1.3 Loads, Loading Combinations, and Allowable Stresses

Loads, loading combinations, and allowable stresses are shown in Table 3.8.6-1.

3.8.6.1.4 Design and Analysis Procedure

The bridge girders and end ties for each crane were designed as simple beams in the vertical plane and as a continuous frame in the horizontal plane. Stresses in the girders and end ties were computed with the trolley positioned to produce maximum stresses.

Trolley positions used were the maximum end position, one-third point, and the point near the center which produces maximum bending moments.

All trolley members were designed as simple beams.

Design of the bridge girders and end ties was by TVA and utilized a computer program written by TVA. The contractor was required to check the size of all members designed by TVA. All mechanical parts and all structural members except the bridge girders and end ties were designed by the contractor. All calculations and designs made by the contractor were reviewed by TVA design engineers.

In designing for earthquake conditions, forces due to accelerations at the crane bridge rails were used as static loads for determining component and member sizes. After establishing component and member sizes, a dynamic analysis, using appropriate response spectra, was made of the total crane to determine that allowable stresses had not been exceeded.

Earthquake accelerations at the bridge rails were determined by dynamic analysis of the structures supporting the crane rails. These accelerations are as follows:

1/2 Safe Shutdown Earthquake (1/2 SSE)

Lateral (north-south)	0.35 g
Lateral (east-west)	0.33 g
Vertical	0.085 g

Safety Shutdown Earthquake (SSE)

Lateral (north-south)	0.50 g
Lateral (east-west)	0.45 g
Vertical	0.17 g

3.8.6.1.5 Structural Acceptance Criteria

Allowable stresses for all load combinations used for the various crane parts are given in Table 3.8.6-1. For normal load conditions, the allowable stresses provide safety factors of 2 to 1 on yield for structural parts and 5 to 1 on ultimate for mechanical parts except for wire ropes which

have a safety factor of 6 to 1 on ultimate. For limiting conditions such as a safe shutdown earthquake and stall, stresses do not exceed 0.9 yield. Factors of safety for a 1/2 safe shutdown condition are the same as for a normal condition.

3.8.6.1.6 Materials, Quality Controls, and Special Construction Techniques

A36 steel was used for the major structural portions of the crane. Design by TVA and erection by TVA were in accordance with TVA's quality assurance program. Design and fabrication by the contractor were in accordance with the contractor's quality assurance program which was reviewed and approved by TVA's design engineers. The contractor's quality assurance program covers the criteria in Appendix B of 10 CFR 50. Fabrication procedures such as welding, stress relieving, and nondestructive testing were included in appendices to the contractor's quality assurance program.

ASTM standards were used for all material specifications and certified mill test reports were provided by the contractor for materials used for all load carrying members.

3.8.6.1.7 Testing and Inservice Surveillance Requirements

Upon completion of erection and adjustments on each crane, all crane motions and operating parts were thoroughly tested with the crane handling 125 percent of rated capacity. Tests were made to prove the ability of each crane to handle its rated capacity and smaller loads smoothly at any speed within the specified speed range. Each brake was tested to demonstrate its ability to hold the required load.

After the initial test, periodic visual inspections of each crane are to be made. Parts inspected during the visual inspection are to include all bolted parts, couplings, brakes, hoist ropes, hoist blocks, limit switches, and equalizer systems.

3.8.6.1.8 Safety Features

The cranes were designed to withstand a 1/2 Safe Shutdown Earthquake and a Safe Shutdown Earthquake and to maintain any load up to rated capacity during and after the earthquake period.

The bridges are equipped with double flange wheels, spring set, electrically released brakes which set and firmly lock the wheels when the bridge drive machinery is not operating or when power is lost for any reason, and hold down lugs which run under the rail heads. During an earthquake the cranes may be displaced, but will not leave the crane rail supporting structure because of a seismically qualified girder to crane wall bumper on the ends of each girder. Guide rollers, mounted on each extreme corner truck travel against the outer surface of the bridge rail to assure bridge-truck alignment.

The trolleys are each equipped with double flange wheels, two spring set, electrically released brakes which set and firmly lock the driving wheels when the trolley drive machinery is not operating or when power is lost for any reason, and hold down lugs which run under the rail

heads. Positive wheel and bumper stops are provided at both ends of the bridges. During an earthquake, the trolleys could be displaced, but they will not leave their rails which are firmly attached to the bridge structures.

Safety features provided for each hoist include two independent gearing systems, two brakes with each of the brakes operating through one of the independent gearing systems, two upper travel limit switches, one lower travel limit switch, overspeed switches set to trip at 120 percent of maximum rated speed, and emergency eddy current braking for controlled lowering in case of simultaneous failure of AC power source and holding brakes. In addition the hoists are provided with a hydraulic equalizing cylinder in place of a conventional equalizing sheave in order to prevent dropping of the load in case of a single rope failure. Holding brakes for the hoists are the spring-set, electrically released type with provisions for manual release of the brakes. The capacity of each main hoist brake is 150% of the rated capacity of the main hoist motor.

Safety control features provided for all motions consist of torque limitation, overcurrent protection, undervoltage protection, control actuators which return to the stop position when released, and an emergency-stop pushbutton.

3.8.6.2 Auxiliary Building Crane

3.8.6.2.1 Description

See Figures 3.8.6-6 through 3.8.6-9.

The crane in the auxiliary building is a single trolley, overhead, electric traveling type with a span of 77 feet. The crane has a main hoist capacity of 125 tons and an auxiliary hoist capacity of 10 tons. The main hoist has been upgraded to single failure proof. The main hoist must meet NUREG-0554 single failure proof criteria for compliance with 10CFR72.124(a), “Design for Criticality Safety,” for handling spent fuel casks.

The main hoist, auxiliary hoists, bridge and trolley travel motions are AC operated with static-stepless regulated speed control.

Structural portions of the crane bridge consist of welded, box-type girders and welded, haunched box-type end ties. Structural portions of the trolley consist of welded, box-type trucks and welded cross girts.

Control of the crane is from a control console in the operators cab which is located at mid-span of the crane beneath the west girder.

The one crane serves the needs of two reactor units. It handles the fuel casks, new fuel shipments to the new fuel storage, shield plugs at the equipment access doors, and any large pieces of equipment going into or out of the reactor buildings via the auxiliary building.

3.8.6.2.2 Applicable Codes, Standards, and Specifications

The following codes, standards, and specifications listed in Section 3.8.6.1.2 were used in the design of the crane with the following additions:

> Institute of Electrical and Electronic Engineers, Criteria for Protection Systems for Nuclear Power Generating Stations, Standard No.279, 1971 edition.

AWS, D2.0, Code for Welded Highway and Railway Bridges.

The following codes, standards and specifications were used in the qualification of the crane for the upgrade to single failure proof:

CMAA-70-1975 (version 2000 used for controls and main hoist upgrade, except for speeds, which were 1975 version)

NUREG-0612
NUREG-0554
EDR1-(P)-A Rev. 3 (Ederer Topical Report)
AWS D1.1 & D14.1
AISC 9th Edition (girder web buckling check only)

The cranes meet applicable requirements of the listed codes, standards, and specifications.

3.8.6.2.3 Loads, Loading Combinations, and Allowable Stresses

Loads, loading combinations, and allowable stresses conform to the acceptance criteria in Section 3.8.6.2.5.

3.8.6.2.4 Design and Analysis Procedure

See Section 3.8.6.1.4 except for the following exceptions:

A new dynamic seismic analysis was performed for the upgrade to single failure proof. Earthquake accelerations were determined by this analysis using the appropriate building response spectra at the crane rails.

Trolley positions used were the maximum end position, one-quarter point, and the point near the center which produces maximum bending moments.

3.8.6.2.5 Structural Acceptance Criteria

Allowable stresses for all load combinations used for the various crane parts conform to the codes, standards, specification, etc., in Section 3.8.6.2.2.

For the crane structure OBE and SSE stresses do not exceed .9 yield.

3.8.6.2.6 Materials, Quality Controls, and Special Construction Techniques

See Section 3.8.6.1.6. In addition, documentation reviews and some visual weld inspections of critical welds were conducted during the upgrade to single failure proof as part of the evaluation to qualify the crane to single failure proof.

3.8.6.2.7 Testing and Inservice Surveillance Requirements

See Section 3.8.6.1.7. In addition, testing and surveillance requirements to meet the requirements of NUREG-0554 single failure proof and NUREG-0612 will be performed.

3.8.6.2.8 Safety Features

The crane was designed to withstand a safe shutdown earthquake (SSE) and to maintain any load up to rated capacity during and after the earthquake period.

The bridge is equipped with double flange wheels, spring-set, electrically released brakes which set and firmly lock the wheels when the bridge drive machinery is not operating or when power is lost for any reason. During an earthquake the crane may be displaced, but it will not leave the crane rails supports. The crane end ties contact the building wall if displacement exceeds three inches. Positive wheel and bumper stops are provided at each end of the bridge travel.

The trolley is equipped with double flange wheels, two spring-set, electrically released brakes which set and firmly lock the driving wheels when the trolley drive machinery is not operating or when power is lost for any reason, and hold down lugs which run under the rail heads. Positive wheel and bumper stops are provided at both ends of the bridge. During an earthquake, the trolley could be displaced, but it will not leave the rails which are firmly attached to the bridge structure.

Safety features provided for the main hoist is in accordance with Ederer's Generic Licensing Topical Report EDR-1. Ederer's Generic Topical Report EDR-1 meets NUREG-0554 and NUREG-0612 requirements for single failure proof cranes. Ederer's eXtra Safety And Monitoring (X-SAM) system include the Hoists' Integrated Protective System (HIPS) that is comprised of a energy absorbing torque limiter, emergency drum brake system, failure detection system, drum safety structure, wire rope protection, and emergency stop button. The auxiliary hoist include two independent gearing systems, and two brakes with each of the brakes operating through one of the independent gearing systems. Each hoist include two upper traveling limit switches, one lower travel limit switch, overspeed switches set to trip at 120 and 125 percent of maximum rated speed for the auxiliary and main hoist, respectively, and emergency dynamic braking for controlled lowering in case of simultaneous failure of AC power source and holding brakes. In addition the main hoist is provided with a hydraulic equalizing cylinder in place of the conventional equalizing sheave in order to prevent dropping of the load in case of a single rope failure. The auxiliary hoist has a two-part whip-style reeving so that a single rope failure will not drop the load. Holding brakes for the hoists are the spring-set, electrically released type with provisions for manual release of the brakes. The capacity of the main hoist high speed holding brake is 150% of the rated capacity of the main hoist motor. The minimum capacity of the main hoist wire rope is 115% of the Maximum Critical Load (MCL).

Movements of the bridge and trolley in the vicinity of the spent fuel pool are restricted by limit switches (Figure 3.8.6-10) designed to the requirements of IEEE Standard No. 279-1971, in order to prevent the crane from transporting a load over the irradiated fuel in the pool as well as preventing interference between the cask handling system (125-ton crane) and the fuel hoist system. Trolley movement is also restricted by mechanical stops (Figure 3.8.6-11). The design collision between trolley bumpers and stops, including mechanical stops, was taken as the force produced by the trolley traveling with 125-ton load at maximum rated speed with power off. The design collision between bridge bumpers and stops was taken as the force produced by the crane traveling with 125-ton load at maximum rated speed with power off and trolley centered on bridge. Figure 3.8.6-12 is a sectional elevation view through the spent fuel pit showing the relationship of the fuel pit and crane while handling the fuel cask.

The electrical interlocks and mechanical stops will be administratively bypassed to allow use of the crane for handling the fuel transfer canal gate or any other administratively approved load

under 2100 lbs. The bypass is accomplished by means of a keyed switch, which when activated, bypasses all interlocks controlling crane movements and illuminates a green indicating light located beneath the operator's cab. The indicating light is visible from any point on the operating floor.

A key operated bypass, along with three pushbutton stations for opening the main line power disconnect, ensure that all bypass operations are controlled. The three pushbutton stations are located along the north wall of the auxiliary building about 4 feet above the 734.0 operating floor. These stations are readily accessible to personnel on the operating floor.

For testing of the interlocks after a bypass operation, each limit switch will be manually operated to ascertain proper function. With each of the limit switches in the operated position, the affected crane control will be operated to verify that the interlock is functioning properly.

Safety control features provided for all motions consist of torque limiting devices, overcurrent protection, undervoltage protection, control actuators which return to the stop position when released, and an emergency-stop pushbutton.

TABLE 3.8.1-1

LOADING COMBINATIONS AND ALLOWABLE STRESSES FOR THE SHIELD BUILDING

LOADING		COMBINATIONS							
		1	2	3	4	5	6	7	8
DEAD LOAD		X	X	X	X	X	X	X	X
EARTH PRESSURE		X	X	X	X	X	X	X	X
DESIGN FLOOD		X	X	X	X			X	X
MAX PROBABLE FLOOD						X			
MAX POSSIBLE FLOOD							X		
LOSS-OF-COLLANT ACCIDENT (LOCA)		X	X	X					
NORMAL OPERATING TEMERATURE					X	X	X		
HALF SAFE SHUTDOWN EARTHQUAKE			X					X	
SAFE SHUTDOWN EARTHQUAKE				X					
SNOW		X						X	
TORNADO					X				
VACUUM RELIEF								X	
CONSTRUCTION CONDITION									X
ALLOWABLE STRESSES [a]	fc	0.45f'c	0.45f'c	0.75f'c	0.6f'c	0.75f'c	0.72f'c	0.72f'c	0.45f'c
	fs	0.4fy	0.5fy	0.9fy	0.9fy	0.54fy	0.9fy	0.64fy	0.4fy
ULTIMATE STRENGTH LOAD FACTORS		----	----	1.03	1.03	1.67	1.03	1.4	----

[a]
fc = Allowable flexural concrete stress
fs = Allowable flexural reinforcing steel stress
f'c = Ultimate strength of concrete
fy = Yield strength of reinforcing steel

TABLE 3.8.1-2

SHIELD BUILDING EQUIPMENT HATCH DOORS AND SLEEVES
LOADS, LOADING COMBINATIONS, AND ALLOWABLE STRESSES

Structural

No.	Load Combinations	Allowable Stresses (psi) Tension	Compression	Shear
I	Dead load plus 2-psi pressure outside	0.50 Fy	0.47 Fy	0.33 Fy
II	Dead load plus 3-psi pressure inside	0.90 Fy	0.90 Fy	0.60 Fy
III	Dead load plus 2-psi pressure outside plus *1/2 SSE	0.50 Fy	0.47 Fy	0.33 Fy
IV	Dead load plus 2-psi pressure outside plus *SSE	0.90 Fy	0.90 Fy	0.60 Fy
**V	Dead load plus *1/2 SSE	0.50 Fy	0.47 Fy	0.33 Fy
**VI	Dead load plus *SSE	0.90 Fy	0.90 Fy	0.60 Fy

Mechanical

No.	Load Combinations	Allowable Stresses (psi) Tension and Compression	Shear
***I	Dead load plus *1/2 SSE	$\frac{Ult}{5}$	$\frac{2 \times Ult}{15}$
***II	Dead load plus *SSE	0.9 Fy	0.6 Fy
III	Dead load plus 2-psi pressure outside	$\frac{Ult}{5}$	$\frac{2 \times Ult}{15}$
IV	Dead load plus 3-psi pressure inside	0.9 Fy	0.6 Fy
V	Dead load plus 2-psi pressure outside plus *1/2 SSE	$\frac{Ult}{5}$	$\frac{2 \times Ult}{15}$
VI	Dead load plus 2-psi pressure outside plus *SSE	0.9 Fy	0.6 Fy

* Acts in one horizontal direction only at any given time and acts in the vertical and horizontal directions simultaneously.

** Doors Open.

*** For hinges only with doors open.

TABLE 3.8.2-1 (Sheet 1)

ALLOWABLE STRESS CRITERIA - CONTAINMENT VESSEL

Loading Condition	Description of Condition	Allowable Stress Condition	Allowable Stress Intensities
1	Cold Shutdown Condition		a) $Pm \leq 1.0\ Sm$
2	Normal Operation Condition	A	b) $P_L + P_b \leq 1.5Sm$
3A	Upset Condition - (STATIC)		c) $P_L + P_b + Q \leq 3.0Sm$
3C	Upset Conditions (MSLB)		
3B	Upset Condition - (DYNAMIC)		a) $Pm \leq Sy$
		B	b) $P_L + P_b$ Greater of 1.8Sm or 1.5Sy
4B	Emergency Condition - (DYNAMIC)		c) $P_L + P_b + Q$ - Evaluation not required
4A	Emergency Condition (STATIC)		a) $Pm \leq 1.13\ (1.0Sm)$
		C	b) $P_L + P_b \leq 1.13\ (1.5Sm)$
			c) $P_L + P_b + Q \leq 3.0Sm$
4C	Emergency Condition (MSLB)		
5A	Construction Condition		a) $Pm \leq 1.0$
		A	
5B	External Pressure Condition		b) $P_L + P_b \leq 1.5Sm$
			c) $P_L + P_b + Q \leq 3.0Sm$
6A	Initial Test		a) $Pm \leq 1.25\ (1.0Sm)$
		D	b) $P_L + P_b \leq 1.25\ (1.5Sm)$
			c) $P_L + P_b + Q \leq 3.0Sm$
6B	Final Test		a) $Pm \leq 1.1\ (1.0Sm)$
		E	b) $P_L + P_b \leq 1.1\ (1.5Sm)$
			c) $P_L + P_b + Q \leq 3.0Sm$

TABLE 3.8.2-1 (Sheet 2)

ALLOWABLE STRESS CRITERIA - CONTAINMENT VESSEL

Loading Condition	Description of Condition	Allowable Stress Condition	Allowable Stress Intensities
7	Post-Accident Fuel Recovery		a) $Pm \leq 1.13\ (1.0Sm)$
		F	b) $P_L + P_b \leq 1.13\ (1.5Sm)$
			c) $P_L + P_b + Q \leq 3.0Sm$

Pm = Primary general membrane stress intensity
P_L = Primary local membrane stress intensity
P_b = Primary bending stress intensity
Q Secondary membrane plus bending stress intensity
Sm = Allowable stress intensity value

(1) Refer to Table N-414 ASME Boiler and Pressure Vessel Code, Section III.

Note 1

Listing of loads comprising each of the loading conditions is given in Section 3.8.2.3.2.

TABLE 3.8.2-2 (Sheet 1)

LOADING COMBINATIONS FOR VARIOUS PLANT CONDITIONS

SEE TABLE 3.8.2-1 FOR STRESS INTENSITIES CORRESPONDING TO THE DESIGNATIONS

LOADS	LOADING CONDITION	1 COLD SHUTDOWN	2 NORMAL OPERATION	3A UPSET (STATIC)	3B UPSET (DYNAMIC)	3C UPSET (MSLB)
GENERAL LOADING	Internal Pressure			10.8 PSIG		PER Ref. #10
	External Pressure					
	NASPL Pressure Transient				X	
	Hydrostatic Loading			Load Cases IA & IB	Load Cases IA & IB	
	Snow Load					
	Wind Loading					
	Dead Load	X	X	X	X	X
	Seismic Load	1/2 SSE	1/2 SSE	1/2 SSE	1/2 SSE	1/2 SSE
	Thermal Load	30°F to 120°F	53°F to 120°F	53°F to 220°F	53°F to 120°F	53°F to 273.5
LOCAL LOADING	Spray Header Load	X	X	X	X	X
	Construction Load					
	Walkway Live Load	X	X			
	Air Lock Live Load	X	X			
	Ice Chest Duct Loads	X	X	X	X	X
	Externally Loaded Penetrations	X	X	X	X	X
STRESS CRITERIA	ASME Design	A	A	A	B	A
	Non-ASME Design	1.33 AISC	1.33 AISE	1.33 AISC	1.6 AISC	1.33 AISC

TABLE 3.8.2-2 (Sheet 2)

LOADING COMBINATIONS FOR VARIOUS PLANT CONDITIONS

SEE TABLE 3.8.2-1 FOR STRESS INTENSITIES CORRESPONDING TO THE DESIGNATIONS

LOADS	LOADING CONDITION	4A EMERGENCY (STATIC)	4B EMERGENCY (DYNAMIC)	4C EMERGENCY (MSLB)	5A CONSTRUCTION	5B EXTERNAL PRESSURE
GENERAL LOADING	Internal Pressure	10.8 PSIG		Per Ref. #10		
	External Pressure					
	NASPL Pressure Transient		X			
	Hydrostatic Loading	Load Cases IA & IB	Load Cases IA & IB			
	Snow Load				X	
	Wind Loading				X	
	Dead Load	X	X	X	X	X
	Seismic Load	SSE	SSE	SSE		1/2 SSE
	Thermal Load	53°F to 220°F	53°F to 120°F	53°F to 273.5°F		
LOCAL LOADING	Spray Header Load	X	X	X		
	Construction Load				X	
	Walkway Live Load				X	
	Air Lock Live Load				X	
	Ice Chest Duct Loads	X	X	X		
	Externally Loaded Penetrations	X	X	X		
STRESS CRITERIA	ASME Design	C	B	C	A	A
	Non-ASME Design	1.6 AISC	1.6 AISE	1.6 AISC	AISC	1.33 AISC

TABLE 3.8.2-2 (Sheet 3)

LOADING COMBINATIONS FOR VARIOUS PLANT CONDITIONS

SEE TABLE 3.8.2-1 FOR STRESS INTENSITIES CORRESPONDING TO THE DESIGNATIONS

LOADS	LOADING CONDITION	6A INITIAL TEST	6B FINAL TEST	7 POST ACCIDENT FLOODING
GENERAL LOADING	Internal Pressure	13.5 PSIG	13.5 PSIG	
	External Pressure			
	NASPL Pressure Transient			
	Hydrostatic Loading			Load Case II
	Snow Load	X		
	Wind Loading	X		
	Dead Load	X	X	X
	Seismic Load			
	Thermal Load			
LOCAL LOADING	Spray Header Load			
	Construction Load			
	Walkway Live Load			
	Air Lock Live Load			X
	Ice Chest Duct Loads			
	Externally Loaded Penetrations			
STRESS CRITERIA	ASME Design	D	E	E
	Non-ASME Design	1.25 AISC	1.1 AISE	1.33 AISC

TABLE 3.8.3-1
LOADING COMBINATIONS AND ALLOWABLE STRESSES FOR THE INTERIOR CONCRETE STRUCTURE

LOADINGS	COMBINATIONS											
	1	1A	2	2A	3	3A	4		5		5A	
DEAD LOAD	X		X		X		X		X		X	
LIVE LOAD	X		X		X				X		X	
NORMAL TEMP.	X		X		X							
LOCA PRESSURE	X		X		X						X	
LOCA TEMP.		X		X		X						
HYPOTHETICAL PRESSURE							X					
½ SSE			X									
SSE					X				X		X	
PIPE FORCES INITIAL JET									X			
PIPE FORCES SATURATED (REDUCED) JET OR ANCHOR											X	
W.S.D. ALLOWABLE STRESSES	DIVIDER BARRIER	OTHER	DIVIDER BARRIER	OTHER	DIVIDER BARRIER	OTHER	DIVIDER BARRIER	OTHER	DIVIDER BARRIER	OTHER	DIVIDER BARRIER	OTHER
fc	0.45 f'c	0.45 f'c	0.45 f'c	0.45 f'c	0.60 f'c	0.75 f'c			0.60 f'c	0.75 f'c	0.60 f'c	0.75 f'c
fs	0.40 fy	0.40 fy	0.50 fy	0.50 fy	0.72 fy	0.90 fy			0.72 fy	0.90 fy	0.72 fy	0.90 fy
U.S.D. LOAD FACTORS					1.25	1.0	1.0		1.25	1.0	1.25	1.0

f'c = Ultimate strength of concrete fy = Yield strength of reinforcement

Table 3.8.3-2
LOADING COMBINATIONS AND LOAD FACTORS

Category	T_a	D	$L_{(1)}$	P_a	T_o	F_{ego}	F_{eqs}	R_o	R_a	Y_r	Allowable Stresses
Service:											
Const	---	1.0	1.0	---	1.0	---	---	---	---	---	(Flexure)
Normal	---	1.0	1.0	---	1.0	1.0	or	1.0	---	---	$f_c = 0.45\ f'_c$
Factored:											$f_s = 0.50\ f_y$ (Shear)
Extreme Environ-mental	---	1.0	1.0	---	1.0	---	1.0	1.0	---	---	50% of Factored
Abnormal	1.0	1.0	1.0	1.5	---	---	---	---	1.0 and/or 1.0		(Flexure) $f_c = 0.75\ f'_c$
Abnormal/ Severe Environ-mental	1.0	1.0	1.0	1.25	---	1.25	---	---	1.0 and/or 1.0		$f_s = 0.90\ f_y$ (Shear)
Abnormal/ Extreme Environ-mental	1.0	1.0	1.0	1.0	---	---	1.0	---	1.0 and/or 1.0		(2) $V_c = 2\sqrt{f}$ $f_s = 0.85$

1. Includes all temporary construction loading during and after construction of containment.

2. V_c is lower for tension members and is essentially the same as given by (ACI 318-71).

LOADS NOMENCLATURE:

D Dead loads, or their related internal moments and forces
F_{eqo} Operating basis earthquake
F_{eqs} Design basis earthquake
L Live load, or their related internal moments and forces
P_a Accident/incident maximum pressure
R_o Piping loads during operating conditions
R_a Piping loads due to increased temperature resulting from the design accident
T_a Thermal loads under the thermal conditions generated by the postulated break and including T_o.
T_o Operational temperature
Y_r Reaction load on broken pipe due to fluid discharge

* The term “design basis earthquake” has the same meaning as the term “safe shutdown earthquake.”

Table 3.8.3-2A

LOADING COMBINATIONS, LOAD FACTORS AND ALLOWABLE STRESSES FOR SG COMPARTMENT ROOF MODIFICATION (5)(6)

Category	T_a	D	$L_{(1)}$	P_a	T_o	F_{ego}	F_{eqs}	R_o	R_a	Y_r	Allowable Stresses
Service:											(Flexure) $f_c = 0.45\ f'c$
Const	---	1.0	1.0	---	1.0	---	---	---	---	---	$f_s = 0.50\ f_y$ (3)
Normal	---	1.0	1.0	---	1.0	1.0	---	1.0	---	---	(Shear) 50% of Factored (3)
Factored: Extreme Environ-mental	---	1.0	1.0	---	1.0	---	1.0	1.0	---	---	(Flexure) $f_c = 0.75\ f'_c$ $f_s = 0.90\ f_y$ (4)
Abnormal	1.0	1.0	1.0	1.5	---	---	---	---	1.0	---	(Shear) (2) $V_c = 2\sqrt{f'_c}$
Abnormal/ Severe Environ-mental	1.0	1.0	1.0	1.25	---	1.25	---	---	1.0	---	$\phi = 0.85$
Abnormal/ Extreme Environ-mental	1.0	1.0	1.0	1.0	---	---	1.0	---	1.0	1.0	

1. Includes all temporary construction loading during and after construction of containment.
2. V_c is lower for tension members and is given by $V_c = 2\sqrt{f'_c}\ (1 + 0.002N_u/A_g)$, with N_u negative for tension.
3. The allowable stress is increased by 33-1/3% when temperature effects are combined with other loads.
4. The tensile strain may exceed yield when the effects of thermal gradients are included in the load combination, i.e., f_s can be <=f_y, and ε_s can be >ε_y when thermal effects are included.
5. The load combinations, load factors and allowable stresses in this table are based on the adopted ASME Section III Division 2, 1975 which are, in general, consistent with the proposed ACI 359 - ASME Section III Division 2, 1973 with the exception of load factors associated with the Y_r load.
6. Structural steel components of the through-bolted connection frames and tapered steel shims were designed in accordance with TVA Design Criteria SQN-DC-V-1.3.2, Miscellaneous Steel Components for Class I Structures.

LOADS NOMENCLATURE:

D	Dead loads, or their related internal moments and forces
F_{eqo}	Operating basis earthquake
F_{eqs}	Design basis earthquake
L	Live load, or their related internal moments and forces
P_a	Accident/incident maximum pressure
R_o	Piping loads during operating conditions
R_a	Piping loads due to increased temperature resulting from the design accident
T_a	Thermal loads under the thermal conditions generated by the postulated break and including T_o.
T_o	Operational temperature
Y_r	Reaction load on broken pipe due to fluid discharge (corresponds to R_r in ASME Section III Div. 2, 1975

* The term “design basis earthquake” has the same meaning as the term “safe shutdown earthquake.”

Table 3.8.3-3

SEALS BETWEEN UPPER AND LOWER COMPARTMENTS

Loads, Loading Combinations, and Allowable Stresses

The seals were designed to withstand loads and environments resulting from the following conditions:

Normal

Differential pressure on seal	- Negligible
Temperature	- 60° to 120° F
Radiation	- 2.0×10^7 rads for 40-year life
Relative movement of vessel to concrete structure	- Less than combined accident and earthquake condition

Accident

Differential pressure on seals	- 12 psi
Temperature	- 327° F in air and steam for first 1-1/2 hours and 200°F in air and steam for next 10-1/2 hours
Radiation	- 4×10^7 rads (gamma) total integrated dose
Relative movement of vessel	- Less than combined accident and earthquake condition

Earthquake

Earthquakes may occur under accident or normal conditions with pressure, temperature, and radiation as listed above. Maximum relative movement of vessel to concrete structure for combined accident and earthquake are as follows:

2.16 inches ± horizontal radially
1.00 inch ± horizontal tangential
0.60 inch vertical up; 0.30 inch vertical down

Table 3.8.3-4 (Sheet 1)

PERSONNEL ACCESS DOORS IN CRANE WALL

Loads, Loading Combinations, and Allowable Stresses

Normal operating conditions are as follows:

Pressure	-	Negligible
Temperature	-	60° to 120° F
Radiation	-	2×10^7 rads for 40-year life

The effect of pipe rupture accidents on the doors varied with the location and intensity of the accidents. The three types of pipe accidents producing maximum effect on the doors and conditions accompanying these accidents are as follows:

a. Accidents Without Jets or Missles Hitting the Doors

Temperature	327° F for first 1-1/2 hours 200° F for next 10-1/2 hours
Radiation	4×10^7 rads (gamma) total integrated dose
Pressure	12 psig acting from inside crane wall for 12 hours

b. Accidents With Jet Hitting a Door

Temperature	700° F maximum
Force and impact	As produced by maximum jet
Radiation	4×10^7 rads (gamma) total integrated dose

Duration of maximum temperature and maximum force from jet is for not more than 10 seconds and then gradually decreases. Pressure and temperature after maximum temperature and force are as outlined in (a) above.

c. Accidents With Missile and Jet from the Same Source Striking a Door

Temperature	700° F maximum
Force and impact	As produced by jet and missile
Radiation	4×10^7 rads (gamma) total integrated dose

Duration of maximum temperature and maximum force from jet is for not more than 10 seconds and then gradually decreases. Pressure and temperature after maximum temperature and force are as outlined in (a) above.

Table 3.8.3-4 (Sheet 2)

PERSONNEL ACCESS DOORS IN CRANE WALL

Loads, Loading Combinations, and Allowable Stresses

Structural Door and Frame Assembly

No.	Load Combinations	Allowable Stresses (psi) Tension	Compression	Shear
I	With door closed or open: Dead load plus *SSE	0.9 F_y	0.9 F_y	0.6 F_y
II	With door closed: Dead load plus *SSE plus 12 psig from inside of crane wall	0.9 F_y	0.9 F_y	0.6 F_y
III	With door closed: Dead load plus *SSE plus Load from maximum jet hitting doors at 615 psi	0.9 F_y	0.9 F_y	0.6 F_y
IV	With door closed: Dead load plus *SSE plus Load from missile with maximum energy (6900 lb/ft) hitting door plus jet from that missile source at 295 psi	0.9 F_y	0.9 F_y	0.6 F_y

Mechanical Parts

No.	Load Combinations	Allowable Stresses (psi) Tension and Compression	Shear
I	With door closed or open: Dead load plus Operator force of 75 pounds	$\frac{Ult}{5}$	$\frac{2 \times Ult}{15}$
II	With door closed or open: Dead load plus *SSE	0.9 F_y	0.6 F_y

Listed allowable stresses are for non-collapsible members only. Collapsible members are plastically deformed.

*Acts in one horizontal direction only at any given time and acts in vertical and horizontal directions simultaneously.

Table 3.8.3-4 (Sheet 3)

PERSONNEL ACCESS DOORS IN CRANE WALL

Loads, Loading Combinations, and Allowable Stresses

Potential missiles which the doors were designed to withstand are as follows:

Temperature element A, without well, boss, and pipe

Temperature element B, with well, boss, and pipe

Temperature element C, without well

Temperature element D, with well

Reactor coolant pump temperature element

Pressurizer temperature detector

Pressurizer heater

2-inch check valve (boron injection)

3/4 inch globe valve(sampling system)
(flow transmitters)
(pressure transmitters)

3/4-inch air-operated valve (head gasket monitoring)

1-inch manually-operated globe valve (excess letdown)

TABLE 3.8.3-5

ICE CONDENSER ALLOWABLE LIMITS [3]

Load Combination	Elastic Analysis: Mechanical[2]	Elastic Analysis: Mechanical and Thermal	Elastic Analysis: Fatigue	Limit Analysis[1] (Load Factors)	Test (Load Factors)
D + 1/2 SSE	S	3S	AISC Part 1	1.43	1.87
D + DBA	1.33 S	N.A.	N.A.	1.30	1.43
D + SSE	1.33 S	N.A.	N.A.	1.30	1.43
D + SSE + DBA	1.65 S	N.A.	N.A.	1.18	1.30

NOTE:

(1) For mechanical loads only. Mechanical plus thermal expansion, combination and fatigue shall satisfy the elastic analysis limits.

(2) Membrane (direct) stresses shall be no larger than 0.7 S_u (70% of ultimate stress).

(3) For particular components that do not meet these limits specific justification shall be provided on a case by case basis.

S = Allowable stresses as defined in Sections 1.5 and 1.6 of the AISC Part I Specification.

TABLE 3.8.3-6

ORIGINAL DESIGN STRESS MARGIN TABLE 3.8.3-1 CRITERIA VERSUS TABLE 3.8.3-2 CRITERIA (4)

	TABLE 3.8.3-1 CRITERIA LOCA PRESSURE + 20%			TABLE 3.8.3-2 CRITERIA LOCA PRESSURE + 40%		
DESIGN FEATURE	(2) CONTROLLING LOAD COMBINATION	STRESS MARGIN (%) SHEAR	MOMENT	(3) CONTROLLING LOAD COMBINATION	STRESS MARGIN (%) SHEAR	MOMENT
REACTOR VESSEL ANNULUS WALL @ R.C. PUMP SUPPORT	5A	-(1)	18.5	ABNORMAL	-(1)	80
*REACTOR CAVITY COLUMNS	4-FLEXURE 2-SHEAR	17	18.5	ABNORMAL/SEVERE ENVIRONMENTAL	64	22
*CONTROL ROD DRIVE MISSILE SHIELD	4	9	7	ABNORMAL	70	61
CRANE WALL @ EL. 679.78	5	0	0	ABNORMAL/EXTREME ENVIRONMENTAL	0	0
*CRANE WALL COLS @ 194°-08'-24" & 204°-31'-57"	5A	7	19	ABNORMAL/SEVERE ENVIRONMENTAL	20	10
*STEAM GEN COMPTS, SIDE WALL @ CRANE WALL	1	58	17.5	ABNORMAL	87	34
*PRESSUREIZER COMPT @ CRANE WALL	4	16	11	ABNORMAL	>100	>100
*FLOOR EL 733.63 @ INTERSECTION W/CRANE WALL	1	9	8.5	ABNORMAL	19	39
*FLOOR EL. 721.0 @ CRANE WALL	1	62	73	ABNORMAL/SEVERE ENVIRONMENTAL	68	>100
MISC COMPTS, RADIAL WALL @ CRANE WALL	1	25	61	ABNORMAL	36	>100
FILL SLAB EL. 679.78 @ CRANE WALL	5	>20	0	ABNORMAL/EXTREME ENVIRONMENTAL	>20	0
*CANAL WALL (SPAN C - VERT POS MOM)	1	-(1)	3.5	ABNORMAL	-(1)	51
*CRANE WALL (SPAN C - NEG MOM @ OPERATING FLOOR)	1	40	3.5	ABNORMAL/SEVERE ENVIRONMENTAL	28	11
CRANE WALL, EL. 714.0, HORIZ, NF	1	-(1)	5.5	ABNORMAL	-(1)	36

* DENOTES DIVIDER BARRIER
(1) NEGLIIGIBLE SHEAR STRESSES IN THESE AREAS
(2) SEE TABLE 3.8.3-1 FOR LOADS
(3) SEE TABLE 3.8.3-2 FOR LOADS

(4) This table does not reflect the evaluations documented in Exhibit F of report CEB 86-19-C. Tabulated stress margins are from the original calculations and do not reflect later evaluations. Changes have been documented in calculation packages.

SQN

Table 3.8.3-7

EQUIPMENT ACCESS HATCH
SUMMARY OF STRESSES FOR CONTROLLING DESIGN CONDITION
140 PERCENT DB LOCA - DL ± 1/2 SSE

	Calculated	ALLOWABLE
Bending stress in structural shapes and plates (f_y = 36,000 lb/in^2)	20,400 lb/in^2	26,600 lb/in^2 (0.60 f_y)
Shear stress in structural shapes and plates (f_y = 36,000 lb/in^2)	8,870 lb/in^2	14,400 lb/in^2 (0.40 f_y)
Tensile stress in anchor bolts (f_y = 36,000 lb/in^2)	15,750 lb/in^2	21,600 lb/in^2 (0.60 f_y)
Bearing stress under anchor bolt end plate (f'_c = 5,000 lb/in^2)	717 lb/in^2	1,250 lb/in^2 (0.25 f'_c Note 1)

Note 1 - See Table 1002(a), ACI 318-63 Code.

During the construction stage, the maximum calculated differential compartment pressures were increased by 40 percent in accordance with NRC requirements to account for uncertainties. At the Operating License stage, the design pressures equaled or exceeded the peak calculated differential pressures. The stresses calculated herein are for the original design and do not reflect the evaluations documented in Exhibit F of report CEB 86-19-C.

TABLE 3.8.3-8

ESCAPE HATCH - DIVIDER BARRIER FLOOR
LOAD COMBINATION - ALLOWABLE STRESSES
(Sheet 1)

Structural Parts (f_y = 36,000 lb/in^2)

No.	Load Combinations	Allowable Stresses (lb/in^2) Tension	Compression	Shear
	Hatch Closed			
I	Dead load Live load at 100 lb/ft^2 Load from latching device	18,000 (0.5 f_y)	18,000 (0.5 f_y)	12,000 (0.33 f_y)
II	Dead load Live load of 12 lb/in^2 from below load from latching device, *SSE	25,900 (0.72 f_y)	25,900 (0.72 f_y)	17,300 (0.48 f_y)
	Hatch Open			
III	Dead load *SSE	25,900 (0.72 f_y)	25,900 (0.72 f_y)	17,300 (0.48 f_y)

Mechanical Parts (Excluding Springs)

No.	Load Combinations	Allowable Stresses (lb/in^2) Compression	Shear
	Hatch Closed		
I	Dead load Live load at 100 lb/in^2 Load from latching device	Ultimate / 5	2/3 X Ultimate / 5
II	Dead load Live load of 12 lb/in^2 below load from latching device *SSE	0.72 yield	2/3 X 0.72 yield
	Hatch Open		
III	Dead load *SSE	0.72 yield	2/3 X 0.72 yield

* Acts in one horizontal direction only at any given time and acts in vertical and horizontal directions simultaneously.

SQN

Table 3.8.3-9

AIR RETURN DUCT PENETRATION

SUMMARY OF STRESSES FOR CONTROLLING DESIGN CONDITION
140 PERCENT DB LOCA - DL $\pm$ SSE

	Calculated	Allowable
Bending stress in structural shapes and plates (f_y = 36,000 lb/in^2)	17,900 lb/in^2	21,600 lb/in^2 (0.60 f_y)
Tensile stress in structural shapes and plates (f_y = 36,000 lb/in^2)	1,890 lb/in^2	21,600 lb/in^2 (0.60 f_y)
Headed concrete anchors (shear) (f'_s = 60,000 lb/in^2)	17,000 lb/in^2	27,000 lb/in^2 (0.45 f_s)

TABLE 3.8.3-10
MAXIMUM STRESS - SUMMARY (DBA X 1.2) PER TABLE 3.8.3-1 CRITERIA (Sheet 1)

DESIGN FEATURE	CONTROL LOAD COMB.	WORKING STRESS DESIGN						ULTIMATE STRENGTH DESIGN				U.S.D. & W.S.D. SHEAR		
		CALCULATED STRESSES (KS)			ALLOWABLE STRESSES (KSI)			FLEXURE & AXIAL FORCES						
		fc	fs	fs'	fc	fs	fs'	*Pu	Mu	*M†	ϕ & LD FACTOR	V ACTUAL	Vc	V ALLOW
REACTOR VESSEL ANNULUS WALL @ RC PUMP SUPPORTS	5A	0	45.5	-8.7	3.0	54.0	54.0							
REACTOR CAVITY CLOUMNS	4	1.63	45.6	-7.1	3.0	54.0	54.0							
REACTOR CAVITY COLUMNS	2											271	90	317
REFUELING CANAL FLOOR SLAB	1	0.44	23.8	3.4	1.8	24.0	24.0					63	70	70
CONTROL ROD DRIVE MISSILE SHIELD	4	3.56	50.5	19.3	5.05	54.0	54.0					259	164	283
CRANE WALL @ EL. 679.78	5							+ 21.7	420	420	.9,1.0	630	147	630
CRANE WALL COLS @ 194°-08'-24" & 206°-31'57"	5A							+ 126.0	2400	2860	.7,1.25	769	139	824
STEAM GEN COMPTS, SIDE WALL @ CRANE WALL	1	0.57	20.4	2.7	3.03	24.0	24.0				.85,2.25	137	99	217
PRESS. COMPT @ CRANE WALL	4							+ 181.0	488	544	.9,1.0	447	0	520
FLOOR EL 733.63 @ INTERSECTION W/CANAL WALL	1	0.955	22.1	2.6	3.03	24.0	24.0					217	90	237
FLOOR EL 721.0 @ CRANE WALL	1	1.39	13.9	6.0	3.03	24.0	24.0					96	90	154
MISC COMPTS, RADIAL WALL @ CRANE WALL	1	0.45	14.9	1.4	1.35	24.0	24.0					48	60	60
FILL SLAB EL 679.78 @ CRANE WALL	5							0	420	420	.9,1.0	24	164	164

See notes on sheet 2

TABLE 3.8.3-10
MAXIMUM STRESS - SUMMARY (DBA X 1.2) PER TABLE 3.8.3-1 CRITERIA (Sheet 2)

* THIS IS M † USING DESIGN VALUE OF Pu AS SHOWN.

+ CALCULATIONS FOR U.S.D. ARE IN CONFORMANCE WITH ACI 318-71.

ϕ(+) DENOTES AXIAL TENSION.

GENERAL NOTES:

(1) NOTATION IS IN ACCORDANCE WITH ACI 318-71. AXIAL FORCES ARE IN KIPS AND MOMENTS ARE IN FT-KIPS. V(ACTUAL) INCLUDES LOAD FACTOR WHERE U.S.D. WAS USED.

(2) THIS TABLE DOES NOT REFLECT THE EVALUATIONS DOCUMENTED IN EXIBIT F OF REPORT CEB-B6-19-C. TABULATED VALUES ARE FROM THE ORIGINAL CALCULATIONS AND DO NOT REFLECT LATER EVALUATIONS. CHANGES HAVE BEEN DOCUMENTED IN CALCULATION PACKAGES.

TABLE 3.8.3-11
SELECTION OF STEELS IN RELATION TO PREVENTION
OF NON-DUCTILE FRACTRUE OF ICE CONDENSER CONDESER COMPONENTS

Properties	Section Thickness: 5/8-inch thick and under	Section Thickness: over 5/8-inch thickness
Energy Absorption Level	None required	i) 20 ft-lb CVN at - 20° F for steel over 36,000 psi yield strength ii) 15 ft-lb CVN at - 20° F for steel under 36,000 psi yield strength
Heat Treatment	None required Steel can be used in the hot rolled condition	i) Normalizing ii) Quench and Temper
Type of Steel	i) Rimmed (a) ii) Semi-killed (b) iii) Killed (b,c) iv) Killed - fine grain practice	i) Killed ii) Killed-fine grain practice

GENERAL NOTES:
1) Hot rolled, normalized or quenched and tempered steels are used where applicable.

2) Charpy v-notch (CVN) impact testing shall be performed in accordance with the requirements of ASTM A370.

a) Rimmed steel shall be used only for carbon steel sheet products.
b) These type steels shall be applied for components which remain within AISC Code stress limits for all load conditions.
c) Killed steels for above AISC Code stress limits shall be upgraded by heat treatment, e.g., bolting.

TABLE 3.8.4-1 (Sheet 1)

AUXILIARY CONTROL BUILDING
CONCRETE STRUCTURE LOADS, LOADING COMBINATIONS,
AND ALLOWABLE STRESSES

I. Loads

The following terms are used in the load combination equation for the Category I structures.

C = Construction condition.

C' = Crane load, including wind on crane.

D = Dead load of structure and equipment plus any other permanent loads contributing stresses, such as soil pressure. Hydrostatic pressure with water surface Elevation 687.

D' = D + hydrostatic pressure from water surface Elevation 700, MPF.

E = 1/2 SSE.

E' = SSE.

H = Spent fuel pit hydrostatic pressure. Worst condition of:

1. Normal water level in pit, cask loading area and canal.

2. Canal empty of water. Normal water level in other areas.

L = Live load. For live load of slabs see Figure 3.8.4-1.

L' = Live load. 20 lb/ft^2 on one side of wall or 10 lb/ft^2 on each side of wall.

L_c = Construction live loads (greater than normal operating live loads) or loads of a temporary or unusual nature.

P_A = The pressure that occurs inside a compartment due to pipe rupture.

P' = The jet force from a pipe rupture or the pipe anchorage force resulting from a jet.

T = Loads caused by change in length of top deck and beams due to 50°F temperature change.

T_A = Accidental increase in temperature of water in pit to 212°F in 8 hours. Temperature inside building 60°F.

T_N = Normal temperature of water in fuel pit and canal 120°F. Temperature inside building 60°F.

W = Wind load. See Section 3.3.

W_T = Tornado loads. See Section 3.3.

TABLE 3.8.4-1 (Sheet 2)

AUXILIARY CONTROL BUILDING
CONCRETE STRUCTURE LOADS, LOADING COMBINATIONS,
AND ALLOWABLE STRESSES

Y_r = Pipe anchor force due to postulated pipe break.

Y_j = Jet force due to postulated pipe break.

Y_m = Missile impact due to postulated pipe break.

II. Load Combination and Allowable Stresses

Control Bay Portion - Stage I

Loading Cases	Allowable WSD Stresses	USD Load Factors
Case I = D+L	Normal (ACI 318-63)	-
Case II = D+L+C'+T+W	1.33 x normal	1.67
Case III = C (shoring loads from top slab wet concrete)	1.33 x normal	1.67

Control Bay Portion - Stage II

The loading combinations and allowable stresses are the same as for the Auxiliary Control Building (see below).

Auxiliary Control Building

Load Combinations	Allowable WSD Stresses	USD Load Factors
Case I = D+L	Normal (ACI 318-63)	-
Case Ia = D'+L	1.35 x normal	1.67
Case II = D+L+E	f_c = normal (ACI 318-63) $f_s = 0.50\ f_y$	-
Case III = D+L+E'	$*f_c = 0.75\ f'_c$ $f_s = 0.90\ f_y$	1.03
Case IV = D+L+W_T	$*f_c = 0.75\ f'_c$ $f_s = 0.90\ f_y$	1.03
Case V = C	1.35 x normal	1.67

*Concrete stresses other than flexure = 1.67 x normal

TABLE 3.8.4-1 (Sheet 3)

AUXILIARY CONTROL BUILDING
CONCRETE STRUCTURE LOADS, LOADING COMBINATIONS,
AND ALLOWABLE STRESSES

Material Properties

Concrete

Slabs and walls	f'_c = 3000 or 4000 lb/in^2
Columns	f'_c = 4000 lb/in^2
Concrete weight	w = 145 lb/ft^3

Reinforcing steel f_y = 60,000 lb/in^2 (ASTM A 615, Grade 60)

Auxiliary Building Spent Fuel Pool

Load Combinations		Allowable WSD Stresses
Case I = D+H		Normal (ACI 318-63)
= D+H+T_N		Normal (ACI 318-63)
Case II = D+H+E		f_c = Normal (ACI 318-63) f_s = 0.50 f_y
= D+H+E+T_N		f_c = Normal (ACI 318-63) f_s = 0.50 f_y
Case III = D+H+E'	*	f_c = 0.75 f'_c f_s = 0.90 f_y
= D+H+E'+T_N	*	f_c = 0.75 f'_c f_s = 0.90 f_y
Case IV = D+H+T_A	*	f_c = 0.75 f'_c f_s = 0.90 f_y

*Concrete stresses other than flexure = 1.67 x normal

TABLE 3.8.4-1 (Sheet 4)

AUXILIARY CONTROL BUILDING
CONCRETE STRUCTURE LOADS, LOADING COMBINATIONS,
AND ALLOWABLE STRESSES

Auxiliary Building West Main Steam Valve Rooms

Load Combinations	WSD Stresses	USD Load Factors
Case I = D+L	Normal (ACI 318-63)	
Ia = D'+L	1.35 x normal	
II = D+L+E	fc = 0.45 f'c fs = 0.50 fy	
III = D+L+E'	*fc = 0.75 f'c fs = 0.90 fy	
IV = D+L+W_T	*fc = 0.75 f'c fs = 0.90 fy	
V = D+L+P_A	*fc = .75 f'c fs = .9 fy	1.0D+1.0L+1.5P_A
VI = D+L+P_AYr +Yj+Ym+E	*fc = .75 f'c fs = .9 fy	1.0D+1.0L+1.25P_A+ 1.0(Yr+Yj+Ym)+1.25E
VII = D+L+P_A+Yr Yj+Ym+E'	*fc = .75 f'c fs = .9 fy	1.0(D+L+P_A+Yr+ Yj+Ym+E')

*Concrete stresses other than flexure = 1.67 x normal
Material properties (see above)

Condensate Demineralizer Waste Evaporator and Additional Equipment Building Portions

Load Combinations	USD Load Factors
I = D+L	1.4D + 1.7L
II = D+L+P_A+E	1.0D + 1.25 (L+P_A) + 1.4E
III = D+L+P_A+P'+E'	1.0(D+L+P_A+P'+E')
IV = D+L+W_T	1.0(D+L+W_T)
V = L_c	1.4(D+L_c)
VI = D+L+P_A	(1.0 or 1.4) D + 1.0L +1.5P_A

Material properties (see above)

Auxiliary Building Reinforced Block Walls (see Appendix 3.8E)

TABLE 3.8.4-1 (Sheet 5)

AUXILIARY CONTROL BUILDING
CONCRETE STRUCTURE LOADS, LOADING COMBINATIONS,
AND ALLOWABLE STRESSES

Auxiliary Building Concrete Structure Earth Values

Angle of internal friction	$\theta = 32°$
Angle of friction between fill and structure	= 16°
Unit weight of fill	
Dry	w = 120 lb/ft^2
Saturated (buoyant unit weight)	w = 65 lb/ft^2
Surcharge	
A1 and A15 line walls (for construction condition only)	1730 lb/ft^2
Others	200 lb/ft^2

TABLE 3.8.4-2 (Sheet 1)

AUXILIARY CONTROL BUILDING
STRUCTURAL STEEL LOADS, LOADING CONDITIONS, AND ALLOWABLE STRESSES

Control Building Portion

1. Live Loads (LL)
   a. Elevation 732.0 - 400 lb/ft^2 (to include cable trays, ducts, walls and electrical boards)
   b. Elevation 706.0 - 100 lb/ft^2
2. Dead Loads (DL)
   a. 8-Inch concrete brick wall - 100 lb/ft^2
   b. 1-1/2-Inch steel grating - 12 lb/ft^2
   c. Concrete - 12.5 lb/ft^2 per inch thickness
   d. Steel framing - 15 lb/ft^2
   e. Piping - varies

Auxiliary Building Portion

1. Live Loads (LL)
   a. Construction load - 20 lb/ft^2
   b. Miscellaneous live load - 30 lb/ft^2
2. Dead Loads (DL)
   a. Concrete - 12.5 lb/ft^2 per inch thickness
   b. Steel roof decking - 3.5 lb/ft^2
   c. Steel roof framing - 25 lb/ft^2

TABLE 3.8.4-2 (Sheet 2)

AUXILIARY CONTROL BUILDING
STRUCTURAL STEEL LOADS, LOADING CONDITIONS,
AND ALLOWABLE STRESSES

Auxiliary Control Building

Seismic Loads

a. 1/2 SSE maximum ground acceleration

Horizontal 0.09 g

Vertical 0.06 g

b. SSE maximum ground acceleration

Horizontal 0.18 g

Vertical 0.12 g

Loading Condition	Tension on Net Section	Shear on Gross Section	Compression on Gross Section	Bending	Concrete Bearing
Case I DL + LL ± 1/2 SSE	$0.60F_y$	$0.40F_y$	See Note 1	$0.66F_y$ to $0.60F_y$	$0.25f'_c$
Case II DL + LL ± SSE	$0.90F_y$	$\frac{0.9F_y}{\sqrt{3}}$	See Note 2	$0.90F_y$	$1.9(0.25f'_c)$

Note 1 - Varies with slenderness ratio, see AISC "Manual of Steel Construction" Seventh Edition, Table 1-36, Page 5-84.

Note 2 - Varies with slenderness ratio:

Main and secondary members where

$$KL/r \le C_c : F_a = 0.9F_y \left[1 - \frac{(KL/r)^2}{2C_c^2}\right] \qquad \text{(A)}$$

Main members where

$$C_c < KL/r \le 200 : F_a = \frac{0.9\pi^2 E}{(KL/r^2)} \qquad \text{(B)}$$

Secondary members where

$$120 < L/r \le 200 : F_{as} = \frac{F_a(\text{By Formula (A)or(B)})}{1.6 - L/200r}$$

TABLE 3.8.4-2 (Sheet 3)

AUXILIARY CONTROL BUILDING
STRUCTURAL STEEL LOADS, LOADING CONDITIONS,
AND ALLOWABLE STRESSES

Where:

$$C_c = \sqrt{\frac{2\pi^2 E}{F_Y}}$$

E = Modulus of elasticity of steel (29,000 k/in^2)

F_a = Axial compressive stress permitted in the absence of bending moment

F_{as} = Axial compressive stress, permitted in the absence of bending moment, for bracing and other secondary members

F_Y = Specified minimum yield stress of material (kips per square inch)

f'_c = Compressive strength of concrete

K = Effective length factor

L = Actual unbraced length (inches)

r = Governing radius of gyration

<u>Material Properties</u>

Steel Properties

Cc = 126.1

E = 29,000,000 lb/in^2

F_Y = 36,000 lb/in^2

Table 3.8.4-3 (Sheet 1)

CONDENSER COOLING WATER INTAKE PUMPING STATION
LOADING CASES, ALLOWABLE STRESSES, FACTORS OF SAFETY
AND MATERIAL PROPERTIES

Case	Description	WSD Allowable Stresses	Factors of Safety		
			Overturning	Flotation	H ÷ V
I	Reservoir level at Elevation 687, one pump bay unwatered; operating loads including fill and surcharge.	Normal per ACI 318-63			
II	Same as (I) without Surcharge but with 1/2 SSE loads.	Normal concrete $f_s = 0.5\ f_y$	1.32 (2 bays unwatered in stability analysis)	1.55	0.377
III	Reservoir level at Elevation 700, any one pump bay unwatered; operating loads including fill and surcharge.	Normal increased by 35%			
IV	Reservoir level at Elevation 675; all pump bays full; operating dead loads including fill SSE.	$f_c = 0.75\ f'_c$ $f_s = 0.9\ f_y$	1.32	1.91	0.582
V	Construction condition; no machinery, backfill in place, no groundwater.		1.33	2.20	0.537
VI	Reservoir level at Elevation 675, two bays unwatered; operating loads including fill and surcharge.		1.69	2.01	0.225

Table 3.8.4-3 (Sheet 2)

CONDENSER COOLING WATER INTAKE PUMPING STATION
LOADING CASES, ALLOWABLE STRESSES, FACTORS OF SAFETY
AND MATERIAL PROPERTIES

VII	Tornado Wind Combined with Case I loads	$f_c = 0.75f'_c$ $f_s = 0.9\ f_y$

Normal stresses are as given for working stress design in ACI Code 318-63. In all stability calculations groundwater Elevation 687 is in fill.

Material Properties

Concrete	$f'_c = 3000\ lb/in^2$ $w = 145\ lb/ft^3$
Reinforcing steel	$f_y = 60{,}000\ lb/in^2$ (ASTM A 615, Grade 60)

Table 3.8.4-4

RETAINING WALLS
LOADING CASES, ALLOWABLE STRESSES, FACTORS OF SAFETY,
AND MATERIAL PROPERTIES

Case	Description	Allowable Stresses (lb/in^2)	Stability Safety Factors Overturning	Sliding
I	Normal operating loads + 200 lb/ft^2 surcharge.	Normal per ACI 318-63	2.0	2.5
II	Same as (I) + 1/2 SSE	f_c = 1350 f_s = .5 f_y	1.6	2
III	Flood condition + 200 lb/ft^2 surcharge.	Normal increased by 35%	1.6	2.8
IV	Same as (I) + SSE	f_c = .75 f'c f_s = .9 f_y	1.6	1.9
V	Sudden drawdown condition + 200 lb/ft^2 surcharge	Normal increased by 35%	1.5	1.67
VI	Construction conditions	Normal increased by 50%	2.7	2.9

Normal stresses are as given for working stress in the ACI Code 318-63

Material Properties

Concrete	f'_c = 3000 lb/in^2 w = 145 lb/ft^3
Reinforcing steel	f_y = 60,000 lb/in^2 (ASTM A 615, Grade 60)

SQN

TABLE 3.8.4-5

CONTROL ROOM SHIELD DOORS
LOADS, LOADING COMBINATIONS, AND ALLOWABLE STRESSES

Door and Jamb Shield Assemblies

Structural Parts

No.	Load Combinations	Allowable Stresses (lb/in^2) Tension	Compresssion	Shear
	Doors Open or Closed			
I	Dead	0.50 F_y	0.47 F_y	0.33 F_y
II	Dead *SSE	0.9 F_y	0.9 F_y	0.6 F_y

*SSE. Acts in any one horizontal direction only at any given time and acts in vertical and horizontal directions simultaneously

Mechanical Parts

No.	Load Combinations	Allowable Stresses (lb/in^2) Tension	Compresssion	Shear
	Doors Open or Closed			
I	Dead	Ultimate 5		Ultimate 7.5
II	Dead *SSE	0.9 F_y		0.6 F_y

*SSE. Acts in any one horizontal direction only at any given time and acts in vertical and horizontal directions simultaneously

TABLE 3.8.4-6

AUXILIARY BUILDING RAILROAD ACCESS HATCH COVERS
LOADS, LOADING COMBINATIONS, AND ALLOWABLE STRESSES

Cover Structure and Embedded Frame

No.	Load Combinations	Allowable Stresses (lb/in^2) Tension	Compression	Shear
	Covers Closed			
I	Dead load plus live load at 100 lb/ft^2	0.50 F_y	0.47 F_y	0.33 F_y
II	Dead load plus live load at 100 lb/ft^2 plus SSE	0.90 F_y	0.90 F_y	0.60 F_y
	Covers Open			
III	Dead load plus hoist pull	0.50 F_y	0.47 F_y	0.33 F_y
IV	Dead load plus hoist pull plus SSE	0.90 F_y	0.90 F_y	0.60 F_y

Mechanical Parts on Covers and Frame

No.	Load Combinations	Allowable Stresses (lb/in^2) Tension and Compression	Shear
	Covers Closed		
I	Dead load plus live load at 100 lb/ft^2	$\frac{\text{Ultimate}}{5}$	$\frac{2 \times \text{Ultimate}}{15}$
II	Dead load plus live load at 100 lb/ft^2 plus SSE	0.9 F_y	0.6 F_y
	Covers Open		
III	Dead load plus hoist pull	$\frac{\text{Ultimate}}{5}$	$\frac{2 \times \text{Ultimate}}{15}$
IV	Dead load plus hoist pull plus SSE	0.9 F_y	0.6 F_y

TABLE 3.8.4-7

RAILROAD ACCESS DOOR
LOADS, LOADING COMBINATIONS, AND ALLOWABLE STRESSES

Door, Embedded Frame, and Door Track

No.	Load Combinations	Allowable Stresses (lb/in^2) Tension	Compression	Shear
	Door Closed			
I	Dead load plus windload at 10 lb/ft^2	0.50 F_y	0.47 F_y	0.33 F_y
II	Dead load plus windload at 30 lb/ft^2	0.90 F_y	0.90 F_y	0.60 F_y
III	Dead load plus windload 10 lb/ft^2 plus *SSE	0.90 F_y	0.90 F_y	0.60 F_y
	Door Open			
IV	Dead load plus hoist pull	0.50 F_y	0.47 F_y	0.33 F_y
V	Dead load plus hoist pull plus *SSE	0.90 F_y	0.90 F_y	0.60 F_y

Hoist Unit Enclosure

No.	Load Combinations	Allowable Stresses (lb/in^2) Tension	Compression	Shear
	Door Closed			
I	Dead load plus 1/4 inch water	0.50 F_y	0.47 F_y	0.33 F_y
II	Dead load plus 1/4 inch water plus *SSE	0.90 F_y	0.90 F_y	0.60 F_y

*Acts in one horizontal direction only at any given time and acts in the horizontal and vertical directions simultaneously.

Mechanical Parts on Door

No.	Load Combinations	Allowable Stresses (lb/in^2) Tension and Compression	Shear
	Door Open		
I	Live load plus windload at 10 lb/ft^2	Ultimate 5	2 x Ultimate 15
II	Live load plus windload at 10 lb/ft^2 plus *SSE	0.9 F_y	0.6 F_y

*Acts in one horizontal direction only at any given time and acts in the horizontal and vertical directions simultaneously.

SQN

TABLE 3.8.4-8 (Sheet 1)

MANWAYS IN RHR SUMP VALVE ROOM
LOADS, LOADING COMBINATIONS, AND ALLOWABLE STRESSES

Structural Parts

No.	Load Combinations	Allowable Stresses (lb/in^2) Tension and Compresssion	Shear
	Manway Closed		
I	Dead load plus 22 lb/in^2 from inside (12-lb/in^2 air and 10 lb/in^2 hydraulic) plus *SSE	0.9 F_y	0.6 F_y
II	Dead load plus 24 lb/in^2 from inside (hydraulic) plus *SSE	0.9 F_y	0.6 F_y
III	Dead load plus 22 lb/in^2 from outside (hydraulic)	0.9 F_y	0.6 F_y
	Manway Open		
IV	Dead load plus *SSE	0.9 F_y	0.6 F_y

Mechanical Parts

No.	Load Combinations	Allowable Stresses (lb/in^2) Tension and Compresssion	Shear
	Manway Closed		
I	Dead load plus 22 lb/in^2 from inside (12-lb/in^2 air and 10 lb/in^2 hydraulic) plus *SSE	0.9 F_y	0.6 F_y
II	Dead load plus 24 lb/in^2 from inside (hydraulic) plus *SSE	0.9 F_y	0.6 F_y
III	Dead load plus 22 lb/in^2 from outside (hydraulic)	0.9 F_y	0.6 F_y
	Manway Open		
IV	Dead load plus *SSE	0.9 F_y	0.6 F_y

*Acts in one horizontal direction only at any given time and acts in vertical and horizontal directions simultaneously.

TABLE 3.8.4-8 (Sheet 2)

Normal, accident, and flood conditions used for design of the manways are as follows:

Normal

Pressure	-	Negligible
Temperature	-	-30° F to 120° F
Radiation	-	Negligible

Accident

0 To 12 hours after accident:

Air pressure	-	12 lb/in^2 from inside
Hydraulic pressure	-	10 lb/in^{2}from inside (water to 696 feet-3 inches from melted ice, RWST contents, and reactor coolant)
Temperature	-	170°F
Radiation dose	-	1.5 x 10^6 rads

12 To 550 hours after accident:

Air pressure	-	Negligible
Hydraulic pressure	-	24.0 lb/in^{2}from inside (water to 727 feet-0 inches as required to remove fuel after certain primary system ruptures)
Temperature	-	120°F
Radiation dose	-	1.0 x 10^7 rads

Flood

Hydraulic pressure	-	22 lb/in^2 from outside (water to 724.0)
Temperature	-	0°F to 120°F
Radiation	-	Negligible

TABLE 3.8.4-9 (Sheet 1)

PRESSURE CONFINING PERSONNEL DOORS
LOADS, LOADING COMBINATIONS, AND ALLOWABLE STRESSES

Door and Frame Assembly

No.	Load Combinations	Allowable Stresses (lb/in^2) Tension	Compresssion	Shear
	Doors Open or Closed			
I	Dead Load from door closers	0.50 F_y	0.47 F_y	0.33 F_y
II	Dead *SSE	0.90 F_y	0.90 F_y	0.60 F_y
	Doors Closed			
**III	Dead 3 lb/in^2 pressure	0.90 F_y	0.90 F_y	0.60 F_y
***IV	2 lb/in^2 pressure toward annulus	0.90 F_y	0.90 F_y	0.60 F_y
V	Dead 3 inches of water pressure on either side of door	0.50 F_y	0.47 F_y	0.33 F_y
****VI	Dead Flood to Elevation 724.0	0.90 F_y	0.90 F_y	0.60 F_y
*****VII	Dead 8.3 lb/in^2 pressure	0.90 F_y	0.90 F_y	0.60 F_y

*SSE. Acts in any one horizontal direction only at any given time and acts in vertical and horizontal directions simultaneously.
** Applies to all doors except A64, A65, A77, and A78.
*** Applies to doors A64, A65, A77, and A78 only.
**** Applies to doors A65 and A78 only.
***** Applies to doors A101 and A105 only.

TABLE 3.8.4-9 (Sheet 2)
(Continued)

Mechanical Parts

No.	Load Combinations	Allowable Stresses (lb/in^2) Tension and Compresssion	Shear
	Doors Open or Closed		
I	Dead Load from door closers	Ultimate 5	2 x Ultimate 15
II	Dead *SSE	0.90 F_y	0.60 F_y
	Doors Closed		
**III	Dead 3 lb/in^2 pressure	0.90_yF	0.60 F_y
***IV	Dead 2 lb/in^2 pressure toward annulus	0.90 F_y	0.60 F_y
V	Dead 3 inches of water pressure on either side of door	Ultimate 5	2 x Ultimate 15
****VI	Dead Flood Elevation 724.0	0.90 F_y	0.60 F_y
*****VII	Dead 8.3 lb/in^2 pressure	0.90 F_y	0.60 F_y

*SSE. Acts in any one horizontal direction only at any given time and acts in vertical and horizontal directions simultaneously.
** Applies to all doors except A64, A65, A77, and A78.
*** Applies to doors A64, A65, A77, and A78 only.
**** Applies to doors A65 and A78 only.
***** Applies to doors A101 and A105 only.

TABLE 3.8.4-10

DIESEL GENERATOR BUILDING DOORS AND BULKHEADS LOADS, LOADING COMBINATIONS, AND ALLOWABLE STRESSES

Structural Parts

No.	Load Combinations	Tension and Compression	Shear
	Door Open		
I	Dead load plus *SSE Door Closed and Bulkhead Bolted in Place	0.9 F_y	0.6 F_y
II	Dead load plus 10-lb windload plus load from latching device	0.5 F_y	0.33 F_y
III	Dead load plus 30-lb windload plus *SSE	0.9 F_y	0.6 F_y
IV	Dead load plus 360-mph windload plus missiles at **100 mph	Doors and bulkheads may deform but must stop design missile and door remain in position	

Mechanical Parts

No.	Load Combinations	Allowable Stresses (lb/in^2) Tension and Compression	Shear
	Door Open		
I	Dead load plus *SSE Door Closed and Bulkhead Bolted in Place	0.9 F_y	0.6 F_y
II	Dead load plus 10-lb windload plus load from latching device	Ultimate / 5	2 x Ultimate / 15
III	Dead load plus 30-lb windload plus *SSE	0.9 Fy	0.6 F_y
IV	Dead load plus 360-mph windload plus missiles at **100 mph	Parts may deform but must stop design missile and door or bulkhead remain in position	

* Acts in one horizontal direction only at any given time and acts in vertical and horizontal directions simultaneously.

** Doors and steel bulkheads are designed for the first three missiles of Spectrum D in Table 3.5.5-6. Precast concrete bulkheads placed in front of these doors and steel bulkheads will stop the full missile spectrum.

TABLE 3.8.4-11

DIESEL GENERATOR BUILDING
LOADS, LOADING COMBINATIONS, ALLOWABLE STRESSES AND MATERIAL PROPERTIES

Loads

D = Dead load of structure including the weight of the diesel generators

L = Live load - 200 lb/ft^2 or equipment load, whichever is greater on floor areas, and 20 lb/ft^2 on roof

L_c = Construction live load (50 lb/ft^2 on roof)

E = 1/2 SSE

E' = SSE

W_T = Tornado loadings (includes missiles)

Load Combinations

Case	Description	Allowable Stresses
I	D+L	Normal stresses*
II	D+L_c	Normal stresses*+ 33%
III	D+L+E	$f_c = 0.45\ f'_c$ $f_s = 0.50\ f_y$
IV	D+L+E'	$f_c = 0.75\ f'_c$ $f_s = 0.90\ f_y$
V	D+L+W_T	$f_c = 0.75\ f'_c$ $f_s = 0.90\ f_y$

*Normal stresses are as given for working stress design in ACI Code 318-63.

Material Properties

Concrete	f'_c	=	3000 lb/in^2 (4000 lb/in^2 for vent hoods)
	w	=	145 lb/ft^3
Reinforcing steel	f_y	=	60,000 lb/in^2 (ASTM A 615, Grade 60)

Table 3.8.4-12

PRIMARY AND REFUELING WATER PIPE TUNNELS
LOAD, LOADING COMBINATIONS, ALLOWABLE STRESSES,
AND MATERIAL PROPERTIES

Loads

D = Dead load of structure plus any permanent load contributing stress.

L = Live load which includes temporary earth weights and pressures, and pipe loads.

S = Surcharge from equivalent H-20 loading.

S' = H-20 truck wheel at center of roof span.

E = 1/2 SSE.

E' = SSE

P = Hydrostatic pressure with water surface at Elevation 687.0.

P' = Hydrostatic pressure with water surface at Elevation 705.0.

Case	Load Combination	Allowable Stresses
I	D+L+S+S'	1.25 x Normal (ACI 318-63)
II	D+L+E+P	Normal (ACI 318-63)
III	D+L+E'+P	*f_c = .75 f'_c f_s = .9 f_y
IV	D+L+P'	*f_c = .75 f'_c f_s = .9 f_y

*Concrete stresses other than flexure = 1.67 x Normal (ACI 318-63)

Normal stresses are as given for working stress in ACI 318-63.

Material Properties

Concrete	f'_c	= 3000 lb/in^2
	w	= 145 lb/ft^3
Reinforcing steel	f_y	= 60,000 lb/in^2 (ASTM A 615, Grade 60)

Table 3.8.4-13

CLASS 1E ELECTRICAL SYSTEMS STRUCTURES
LOADS, LOADING COMBINATIONS, ALLOWABLE STRESSES
AND MATERIAL PROPERTIES

Loads

D = Dead load of structure.

E = 1/2 SSE.

E' = SSE.

L = Live load - Internal water pressure equivalent to water at Elevation 722.6.

S = Soil load including 200 lb/ft^2 surcharge.

Load Combinations

Load Combinations		WSD Allowable Stresses
Class I	= D+S	Normal (ACI 318-63)
Class II	= D+S+L	Normal (ACI 318-63) plus 33%
Class III	= D+S+E	$f_c = 0.45\ f'_c$ $f_s = 0.50\ f_y$
Class IV	= D+S+E'	$f_c = 0.75\ f'_c$ $f_s = 0.90\ f_y$

Normal stresses are as given for working stress in the ACI Code 318-63.

Material Properties

Concrete	f'_c	= 3000 lb/in^2
	w	= 145 lb/ft^3
Reinforcing steel	f_y	= 60,000 lb/in^2 (ASTM A 615, Grade 60)

TABLE 3.8.4-14 (Sheet 1)

EAST STEAM VALVE ROOM
LOADS, LOAD COMBINATIONS, ALLOWABLE STRESSES, FACTORS OF SAFETY AND MATERIAL PROPERTIES

Loads

D	=	Dead load of structure and equipment plus any other permanent load contributing stress.
L	=	Live loads which are uniform design loadings on the roof and floor slab that are used in lieu of moveable loads such as those due to equipment and snow. 200 lb/ft^2 is used in the design of the floor slab and 20 lb/ft^2 is used for the roof.
W_T	=	Tornado loadings described in Section 3.3.
E	=	1/2 SSE.
E'	=	SSE.
P_a	=	Pressure from postulated main steam pipe break.
Y_r	=	Pipe anchor force due to postulated pipe break.
Y_j	=	Jet force due to postulated pipe break.
Ym	=	Missile impact force due to postulated pipe break.
T_A	=	Thermal loads under thermal conditions generated by the postulated break and including T_o.
R_A	=	Pipe reactions under thermal conditions generated by the postulated break and including R_o.
T_o	=	Thermal effects and loads during normal operating or shutdown conditions, based on the most critical transient or steady-state condition.
R_o	=	Pipe reactions during normal operating or shutdown conditions, based on the most critical transient or steady-state condition.

TABLE 3.8.4-14 (Sheet 2)

Loading Combinations and Allowable Stresses

Loading Combinations		Allowable WSD Stresses	USD Load Factors
Case I =	D+L	Normal (ACI 318-63)	1.4D+1.7L
Case Ia =	$D+L+T_o+R_o$	1.35 x Normal	$0.75(1.4D+1.7L+1.7T_o+1.7R_o)$
Case II =	D+L+E	$f_c = .45\ f'_c$ $f_s = .50\ f_y$	1.4D+1.7L+1.9E
Case IIa =	$D+L+E+T_o+R_o$	1.35 x Normal	$0.75(1.4D+1.7L+1.9E+1.7T_o+1.7R_o)$
Case III =	$D+L+E'+T_o+R_o$	$*f_c = .75\ f'_c$ $f_s = .9\ f_y$	$1.0(D+L+E')+T_o+R_o$
Case IV =	$D+L+W_T+T_o+R_o$	$*f_c = .75\ f'_c$ $f_s = .9\ f_y$	$1.0(D+L+W_T)+T_o+R_o$
Case V =	$D+L+P_A+T_A+R_A$	$*f_c = .75\ f'_c$ $f_s = .9\ f_y$	$1.0D+1.0L+1.5P_A+T_A+R_A$
Case VI =	$D+L+P_A+Yr+Yj+Ym+E+T_A+R_A$	$*f_c = .75\ f'_c$ $f_s = .9\ f_y$	$1.0D+1.0L+1.25P_A+1.0(Yr+Yj+Ym)+1.25E+T_A+R_A$
Case VII =	$D+L+P_A+Yr+Yj+Ym+E'+T_A+R_A$	$*f_c = .75\ f'_c$ $f_s = .9\ f_y$	$1.0(D+L+P_A+Yr+Yj+Ym+E')+T_A+R_A$

*Concrete stresses other than flexure = 1.67 x normal.

*Allowable flexural concrete stresses. Stresses other than flexure shall have the same percent increase over normal as those shown for flexure.

Material Properties

Concrete	f'_c = 4000 lb/in^2 w = 145 lb/ft^3
Reinforcing steel	f_y = 60,000 lb/in^2 (ASTM A 615, Grade 60)

Table 3.8.4-15 (Sheet 1)

EAST STEAM VALVE ROOM
STRUCTURAL STEEL
LOADING COMBINATIONS AND ALLOWABLE STRESSES FOR STRUCTURAL STEEL

Loading Combinations	Tension Net Section	Shear on Gross Section	Compression on Gross Section	Bending	Concrete Bearing
Case I DL + LL ± 1/2SSE	0.60 F_y	0.40 F_y	See Note 1	0.66 F_y to 0.60 F_y	0.25 f'_c
Case II DL + LL ± SSE	0.90 F_y	$\frac{0.9\ F_y}{\sqrt{3}}$	See Note 2	0.90 F_y	1.9(0.25f'_c)

Note 1 - Varies with slenderness ratio, see AISC "Manual of Steel Construction," Seventh Edition, Table 1-36, Page 5-84.

Note 2 - Varies with slenderness ratio:

Main and secondary members where $KL/r \le C_c$:

$$F_a = 0.9 F_y \left[1 - \frac{(KL/r)^2}{2\,C_c^2} \right] \qquad \text{(A)}$$

Main members where $C_c < KL/r < 200$:

$$F_a = \frac{0.9\,\pi^2 E}{(KL/r)^2} \qquad \text{(B)}$$

Secondary members where $120 < L/r \le 200$:

$$F_{as} = \frac{F_a(\text{by Formula (A) or (B)})}{1.6 - L/200r}$$

Where:

$$C_c = \sqrt{\frac{2\,\pi^2 E}{F_y}}$$

E = Modulus of elasticity of steel (29,000 k/in^2)

F_a = Axial compressive stress permitted in the absence of bending moment

F_{as} = Axial compressive stress, permitted in the absence of bending moment, for bracing and other secondary members

F_y = Specified minimum yield stress of material (K/in^2)

Table 3.8.4-15 (Sheet 2)

EAST STEAM VALVE ROOM
STRUCTURAL STEEL
LOADING COMBINATIONS AND ALLOWABLE STRESSES FOR STRUCTURAL STEEL

K = Effective length factor

L = Actual unbraced length (inches)

r = Governing radius of gyration

Material Properties

Steel

C_c = 126.1

E = 29,000,000 lb/in^2

F_y = 36,000 lb/in^2

Table 3.8.4-16

ERCW PUMPING STATION LOADS AND LOADING COMBINATIONS

Loads

D = Dead load

L = Uniform live load of 400 lb/ft^2, or equipment load, whichever is greater

F_1 = Normal hydrostatic loading (Normal maximum pool, Elevation 683, normal minimum pool, Elevation 675) (with one bay unwatered)

F_2 = MPF, Still water at El. 723.5 with wave runup outside structure of 6.1 ft (El. 729.5) and surge inside structure of 0.5 ft (El. 724.0)

F_3 = 1/2 MPF, Still water at El. 698.1 with wave runup outside structure of 5.9 ft (El. 704.0) and surge inside structure of 0.5 ft (El. 698.6)

F_4 = Normal groundwater at El. 683 (Reservoir El. at 635.8, loss of downstream dam)

W = Normal wind load (95 mph)

W' = Wind loading (45 mph)

W_T = Tornado - Includes wind pressures with missiles internal pressure as defined in FSAR Sect. 3.3.2.

E = Earthquake load from 1/2 SSE with horizontal rock acceleration of 0.09 g

E' = Earthquake load from SSE with horizontal rock acceleration of 0.18 g

Loading Combinations (ACI 318-71)

Case Determination	Required Strength
Normal operating	$U = 1.4D + 1.7L + 1.4F_1$
Seismic operating	$U = 1.4D + 1.7L + 1.4F_1 + 1.9E$
Dead and seismic	$U = 1.2D + 1.9E$
Normal wind	$U = 1.4D + 1.7L + 1.7W + 1.4F_1$
Dead and wind	$U = 1.2D + 1.7W$
Extreme seismic	$U = D + L + F_4 + E'$
Extreme wind	$U = D + L + F_1 + W_T$
Construction condition	$U = 1.4D + 1.4L + 1.4F_1$
Probable maximum flood	$U = D + L + F_2 + W'$
Seismic condition	$U = D + L + F_3 + 1.25E$

Table 3.8.4-17 (Sheet 1)

REFUELING WATER STORAGE TANK
FOUNDATION

LOADS AND LOAD COMBINATIONS

Loads

Normal loads, which are those loads to be encountered during normal plant operation and shutdown, include:

D -- Dead loads or their related internal moments and forces including any permanent equipment loads and hydrostatic loads.

L -- Live loads or their related internal moments and forces including any moveable equipment loads and other loads which vary with intensity and occurrence, such as soil pressure.

Severe environmental loads include:

E -- Loads generated by the operating basis earthquake.

W -- Loads generated by the design wind specified for the plant.

Extreme environmental loads include:

E' -- Loads generated by the SSE.

W_T -- Loads generated by the design tornado specified for the plant.

Abnormal loads, which are those loads generated by a postulated high-energy pipe break accident, include:

Y_j -- Jet impingement equivalent static load on a structure generated by the postulated break, and including an appropriate dynamic load factor to account for the dynamic nature of the load.

Y_m -- Missile impact equivalent static load on a structure generated by or during the postulated break, as from pipe whipping, and including an appropriate dynamic load.

Load Combinations

The following cases of loading combinations apply to both concrete structure and foundation designs. Strength design method described in ACI 318-71 should be used.

a. For factored load conditions which include normal and severe environmental, the following load combinations should be considered:

(1) U = 1.4 D + 1.7 L
(2) U = 1.4 D + 1.7 L + 1.9 E
(3) U = 1.4 D + 1.7 L + 1.7 W
(4) U = 1.2 D + 1.9 E
(5) U = 1.2 D + 1.7 W

where U is the section strength required to resist design loads based on the strength design methods described in ACI 318-71.

Table 3.8.4-17 (Sheet 2)

REFUELING WATER STORAGE TANK
FOUNDATION

b. For factored load conditions, which represent extreme environmental, abnormal, abnormal/severe environmental and abnormal/extreme environmental conditions, the following load combinations should be considered:

(1) $U = D + L + E'$
(2) $U = D + L + W_t$
(3) $U = D + L$
(4) $U = D + L + Y_j + Y_m + 1.25\ E$
(5) $U = D + L + Y_j + Y_m + E'$

Stability

The stability shall be checked for the principal design cases with minimum safety factors as shown below:

	For Combination	Factor of Safety Against Overturning or Sliding
(1)	$D + L + E$	1.50
(2)	$D + L + W_T$	1.10
(3)	$D + L + E$	1.10
(4)	$D + L + Y_j + Y_m + E'$	1.10

Temperature and Shrinkage

For temperature variation consult the Lead Civil Engineer. The coefficient of thermal expansion shall be 0.000005 in. per in. per degree Fahrenheit. The modulus of elasticity of concrete for use in shrinkage computations shall be 3×10^6 psi.

Shrinkage reinforcement shall be proportioned in accordance with TVA standards. Where needed, the placing temperature of the concrete in walls more than 24 in. thick and slabs more than 30 in. thick shall be limited to 65°F by the addition of ice if required. All drawings shall so specify. A minimum of two conditions shall be investigated:

I Construction condition - Minimum temperature (T) = 30°F; limiting crack width (Wc) = 0.015 in.

II Final condition - Minimum temperature (T) is that of final condition; limiting crack width (Wc) = 0.010 in.

Table 3.8.4-18

SPENT FUEL POOL GATES LOADS AND
LOADING COMBINATIONS

No.	Load Combination	Allowable Stresses lb/in^2 Loading Condition Tension	Compression	Shear
1	D+L	.6 F_Y	.6 F_Y	.4 F_Y
2	D+L+E	.6 F_Y	.6 F_Y	.4 FY
3	D+L+W	.6 F_Y	.6 F_Y	.4 F_Y
4	$D+L+T_o+R_o+E'$	.96 F_Y	.96 F_Y	.64 F_Y
5	$D+L+T_o+R_o+W_T$	.96 F_Y	.96 F_Y	.64 F_Y
6	$D+L+T_a+R_a+P_a$	.96 F_Y	.96 F_Y	.64 F_Y
7	$D+L+T_a+R_a+P_a+1.0(Y_j+Y_r+Y_m)+E$	.96 F_Y	.96 F_Y	.64 F_Y
8	$D+L+T_a+R_a+P_a+1.0(Y_j+Y_r+Y_m)+E'$	1.02 F_Y	1.02 F_Y	.68 F_Y

NOTE: T_o, R_o, T_a, R_a, P_a, Y_j, Y_r, Y_m = 0

D - Dead loads or their related internal moments and forces including any permanent equipment loads and hydrostatic loads.

L - Live loads or their related internal moments and forces including any movable equipment loads and other loads which vary with intensity and occurrence, such as soil pressure.

T_o - Thermal effects and loads during normal operating or shutdown conditions, based on the most critical transient or steady-state condition.

R_o - Piping reactions during normal operating or shutdown conditions, based on the most critical transient or steady-state condition.

E - Loads generated by the operating basis earthquake.

W - Loads generated by the design wind specified for the plant.

E' - Loads generated by the Safe Shutdown Earthquake.

W_T - Loads generated by the tornado specified for the plant.

TABLE 3.8.6-1 (Sheet 1)

POLAR CRANES

LOADS, LOADING COMBINATIONS, AND ALLOWABLE STRESSES

No.	Load Combinations	Allowable Stresses (psi) Tension	Compression	Shear
	Bridge Structure			
I	Dead Live Impact Trolley tractive	0.5 F_y	0.48 F_y	0.33 F_y
II	Dead Live Impact Bridge tractive	0.5 F_y	0.48 F_y	0.33 F_y
III	Dead Live Trolley collision	0.62 F_y	0.59 F_y	0.41 F_y
IV	Dead Trolley weight Stall at 275% capacity	0.9 F_y	0.9 F_y	0.6 F_y
V	Dead Live at 100% capacity *1/2 SSE	0.5 F_y	0.48 F_y	0.33 F_y
VI	Dead Live at 100% capacity *SSE	0.9 F_y	0.9 F_y	0.6 F_y
VII	Dead Special trolley wheel loads as furnished by DEC	0.5 F_y	0.48 F_y	0.33 F_y

*Acts in one horizontal direction only at any given time and acts in the vertical and horizontal directions simultaneously.

	Trolley Structure			
I	Dead Live Impact	0.5 F_y	0.48 F_y	0.33 F_y
II	Dead	**0.9 F_y	0.9 F_y	0.6 F_y
	Stall at 275% capacity	*0.62 F_y	0.59 F_y	0.41 F_y

*For sheave frames, cross girts, and their respective connections
**For all other members

III Same as case V for bridge

IV Same as case VI for bridge

TABLE 3.8.6-1 (Sheet 2)

POLAR CRANES

LOADS, LOADING COMBINATIONS, AND ALLOWABLE STRESSES

Mechanical Parts

No.	Load Combinations	Allowable Stresses (psi)	
		Tension and Compression	Shear
	Parts Other Than Wheel Axles and Saddle Truck Connecting Pins		
I	Dead Live	Ult 5	2 x Ult 15
II	Dead Stall at 275% capacity	0.9 F_y	0.6 F_y
	Wheel Axles and Connecting Pins		
I	Dead Live Impact	Ult 5	2 x Ult 15
II	Dead Live Collision	Ult 5	2 x Ult 15
III	Dead Stall at 275% capacity	0.9 F_y	0.6 F_y
IV	Dead Live at 100% capacity *1/2 SSE	Ult 5	2 x Ult 15
V	Dead Live at 100% capacity *SSE	0.9 F_y	0.6 F_y
VI	Dead Special trolley wheel load as furnished by DEC	Ult 5	2 x Ult 15

*Acts in one horizontal direction at any given time and acts in the vertical and horizontal directions simultaneously.

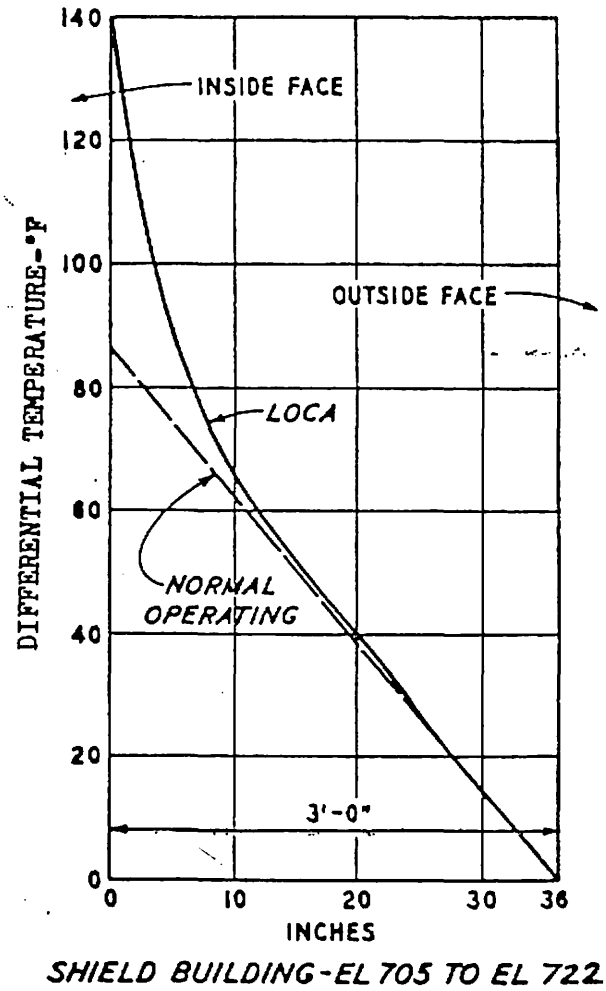

FIGURE 3.8.1-1 TEMPERATURE GRADIENT

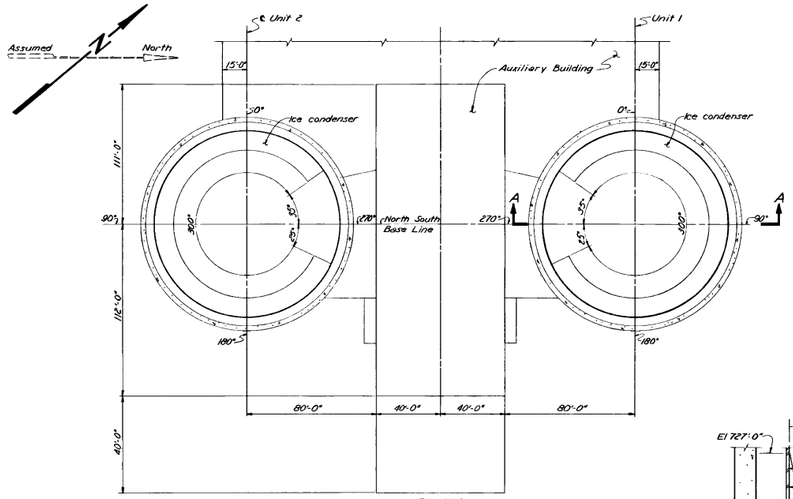

PLAN

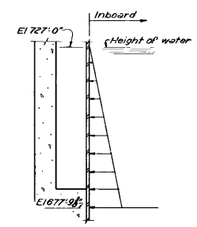

HYDROSTATIC LOAD - CASE II

Hydrostatic load occurs when pressure and temp in containment vessel and annulus are at normal operating conditions.
The allowable stress is 1.1S (1.55m)
Earthquake not considered for this case.

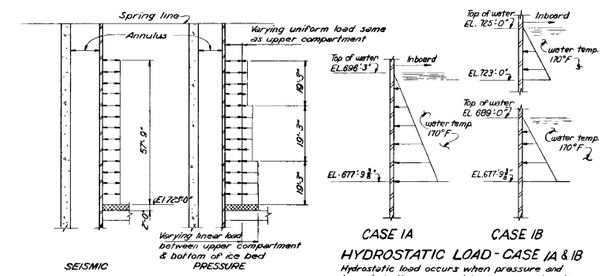

HYDROSTATIC LOAD - CASE IA & IB

Hydrostatic load occurs when pressure and temp in both upper and lower compartments are 12 psi and 170°F. Allowable stress shall conform to loading condition 1 of table 1.in appendix A of the specification.

ICE CONDENSER DUCT LOADS

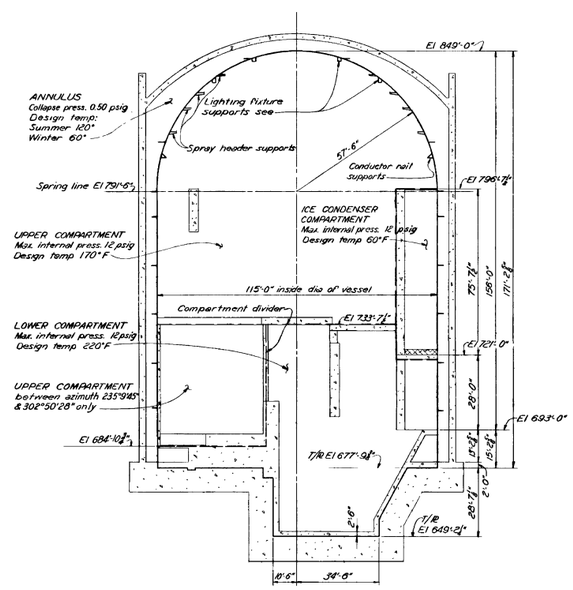

A-A

CONTAINMENT DESIGN PRESSURES & TEMPERATURES
UNIT 1 AS SHOWN
UNIT 2 OPP HAND

NORMAL OPERATING CONDITIONS:
INSIDE THE CONTAINMENT VESSEL
Max pressure 0.3 psig.
Upper compartment shell temperature 110°F.
Lower compartment shell temperature 120°F.
Ice compartment shell temperature 60°F.
ANNULUS
Pressure 0 psig.
Temperature 60° to 120°F.

SEQUOYAH NUCLEAR PLANT
FINAL SAFETY
ANALYSIS REPORT

FIGURE 3.8.2-1

STRUCTURAL STEEL CONTAINMENT VESSEL
(REVISED BY AMENDMENT 13)

DRAWING SERVICES UNIT
PROCAD MAINTAINED DRAWING
THIS CONFIGURATION CONTROL DRAWING IS MAINTAINED BY THE SQN CAD UNIT AND IS PART OF THE TVA PROCADAM DATABASE.
COMPUTER GRAPHICS

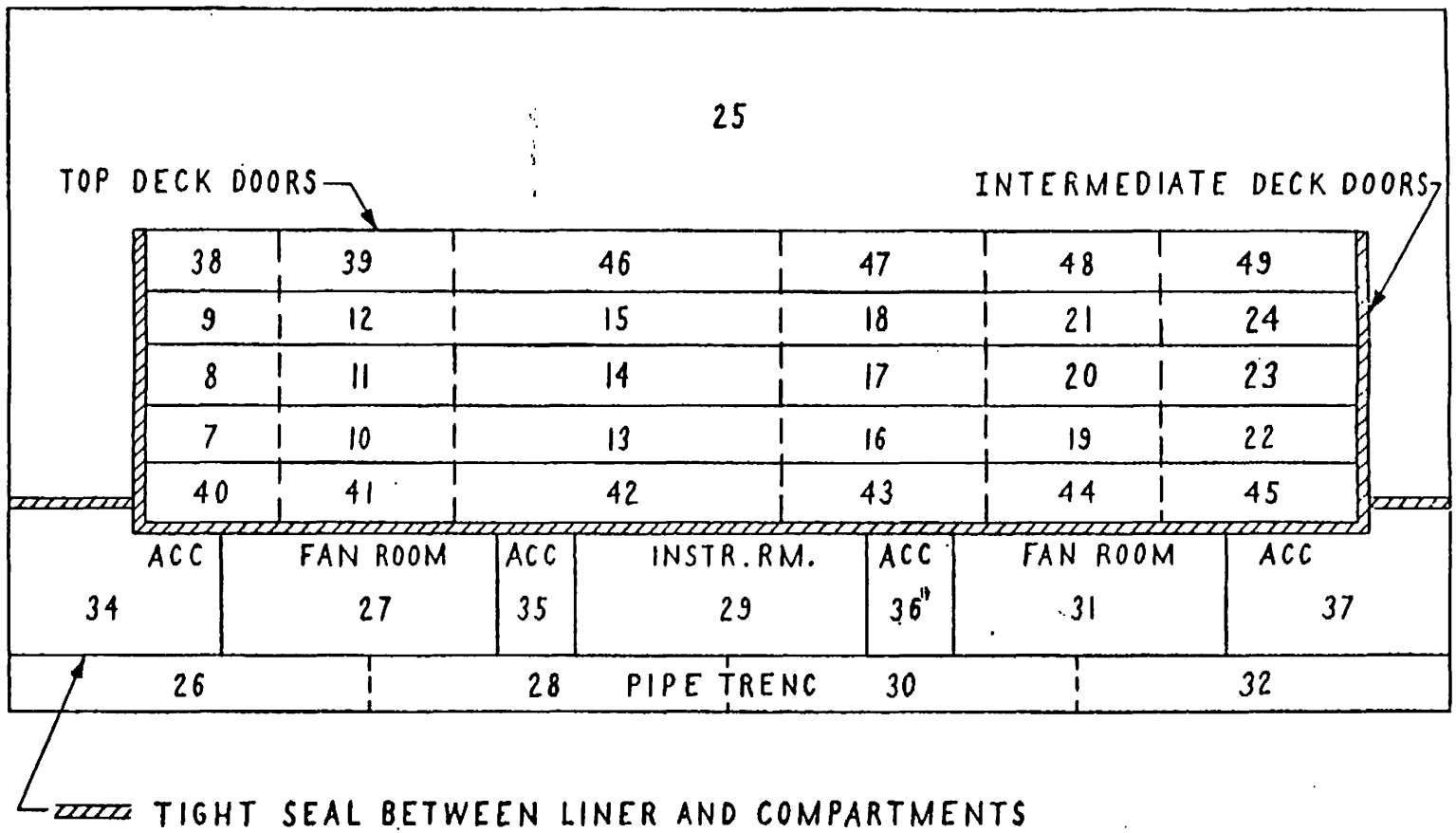

FIGURE 3.8.2-2 LAY OUT of CONTAINMENT SHELL

Revised by Amendment 13

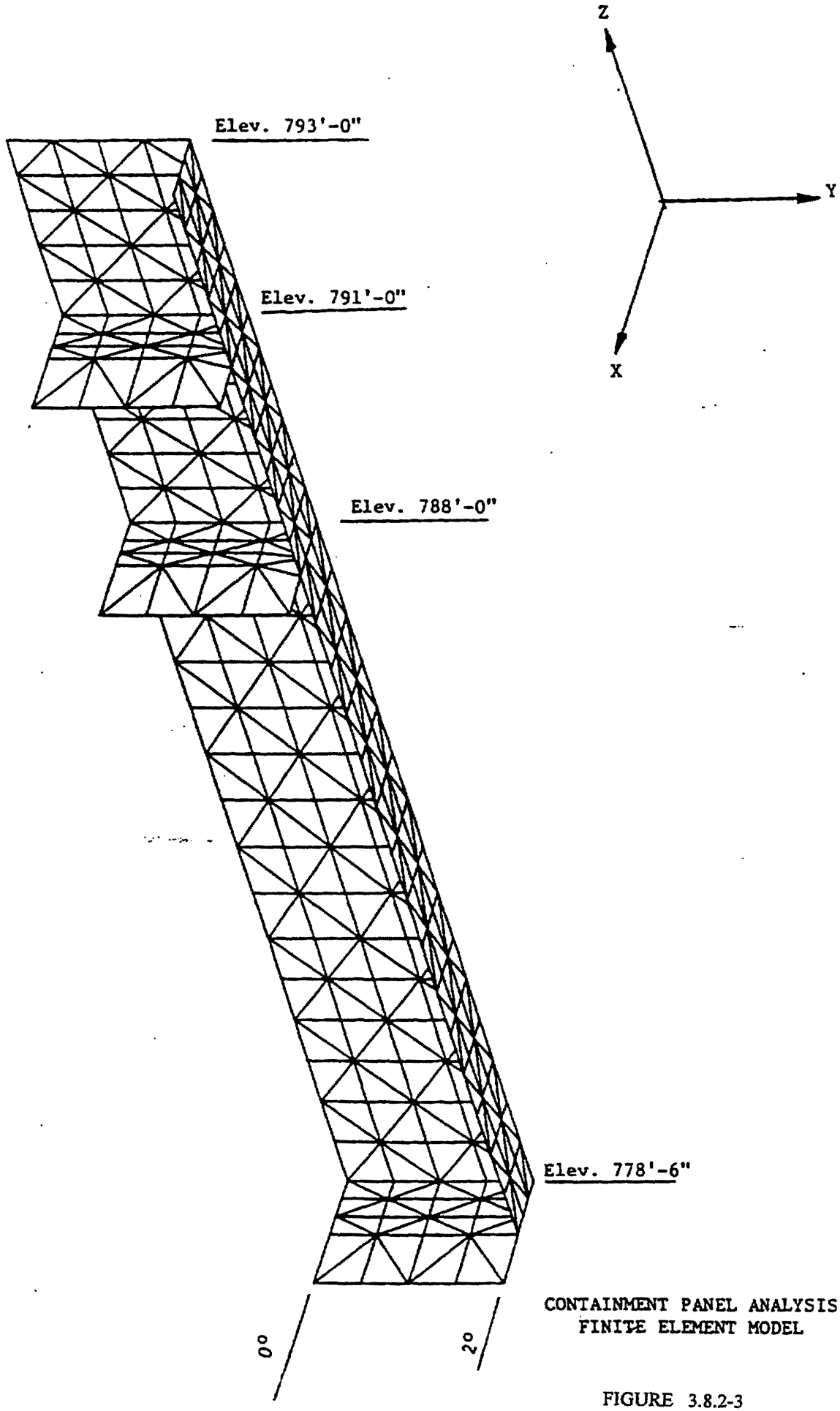

CONTAINMENT PANEL ANALYSIS
FINITE ELEMENT MODEL

FIGURE 3.8.2-3

Revised by Amendment 13

SEQUOYAH NUCLEAR PLANT - STEEL CONTAINMENT VESSEL - ELASTO-PLASTIC ANALY

HIDDEN ANSYS 4

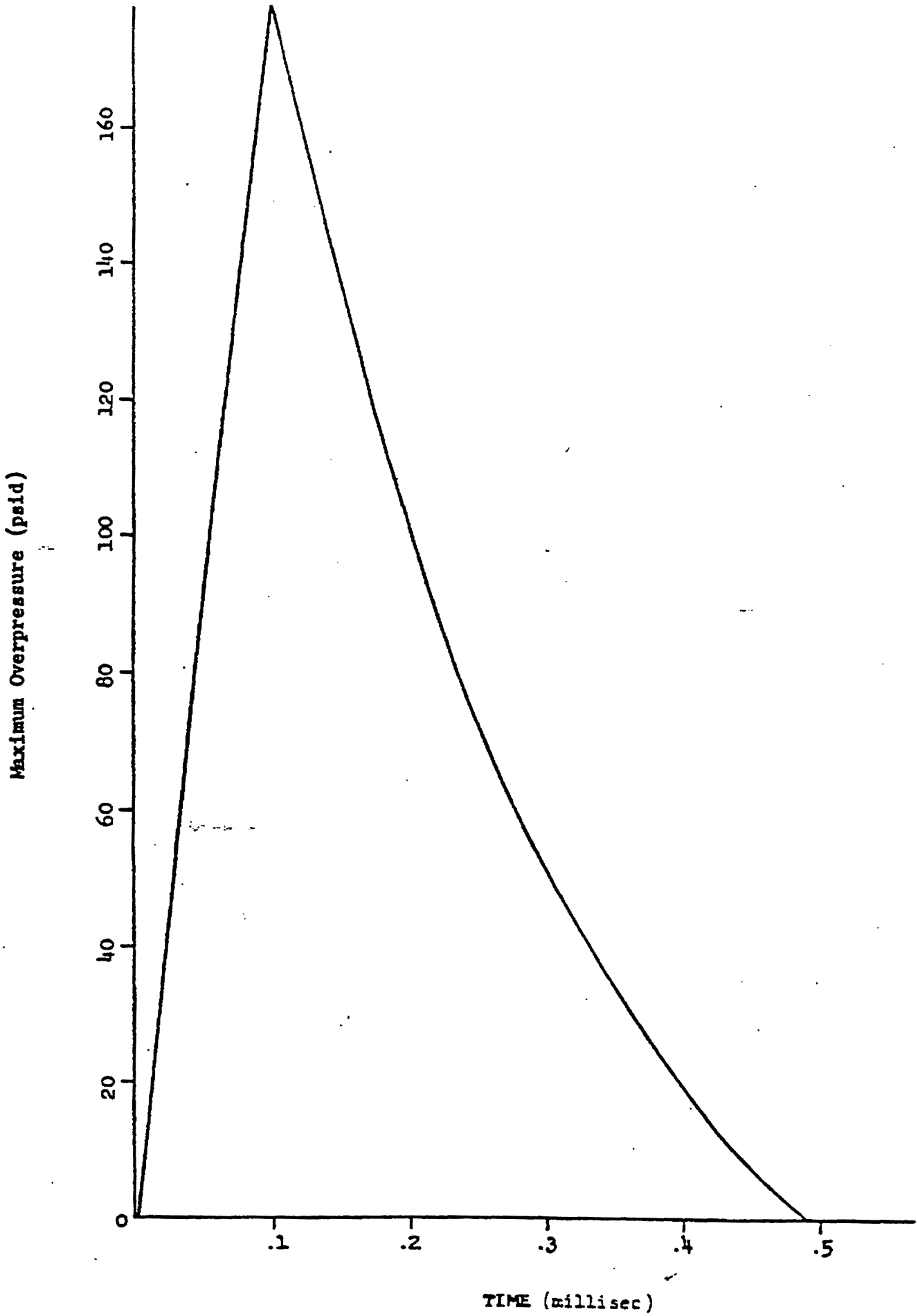

FIGURE 3.8.2-4

PRESSURE - TIME FUNCTION OF LOCAL DETONATION

Revised by Amendment 13

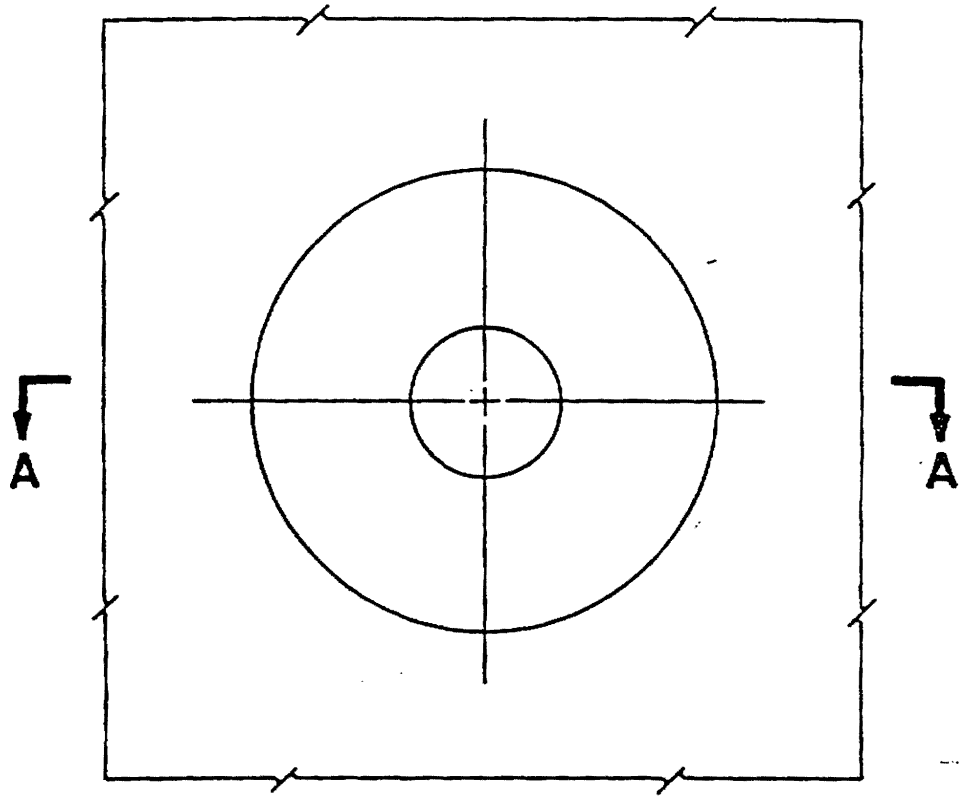

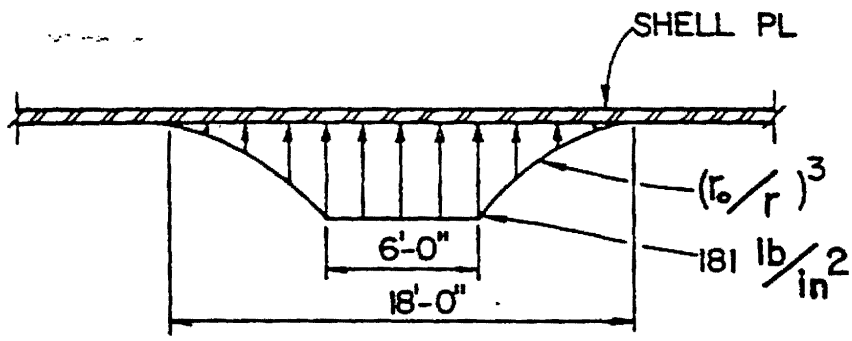

A-A

FIGURE 3.8.2-5

GRAPHICAL REPRESENTATION OF PRESSURE FUNCTION

Revised by Amendment 13

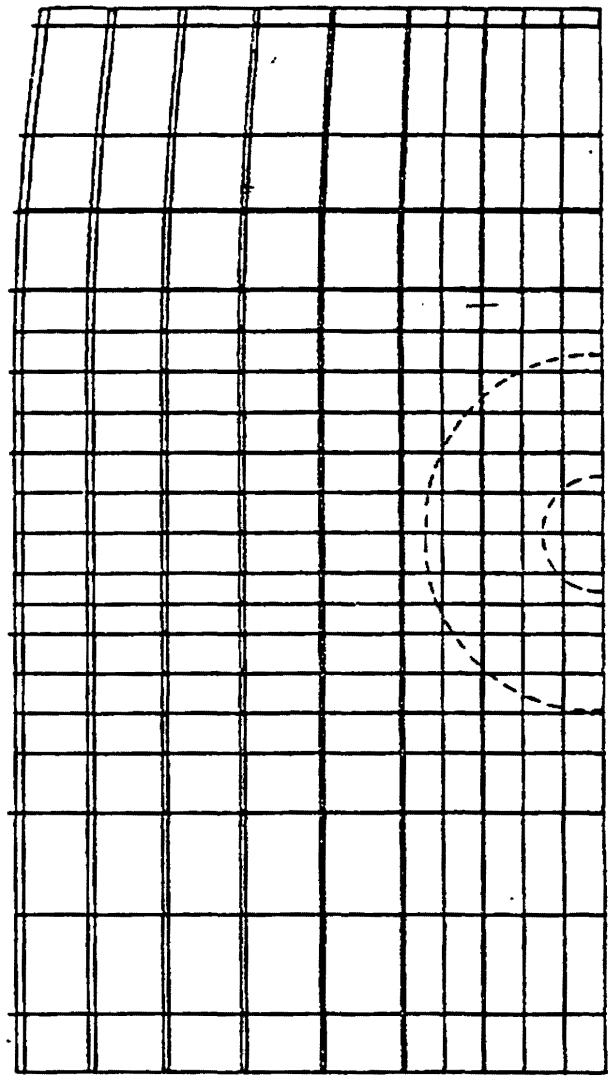

FIGURE 3.8.2-6

SEQUOYAH NUCLEAR PLANT---HYDROGEN EXPLOSION---CONTAINMENT PANEL ANALYSIS
FINITE ELEMENT MODEL OF SHELL SEGMENT

Revised by Amendment 13

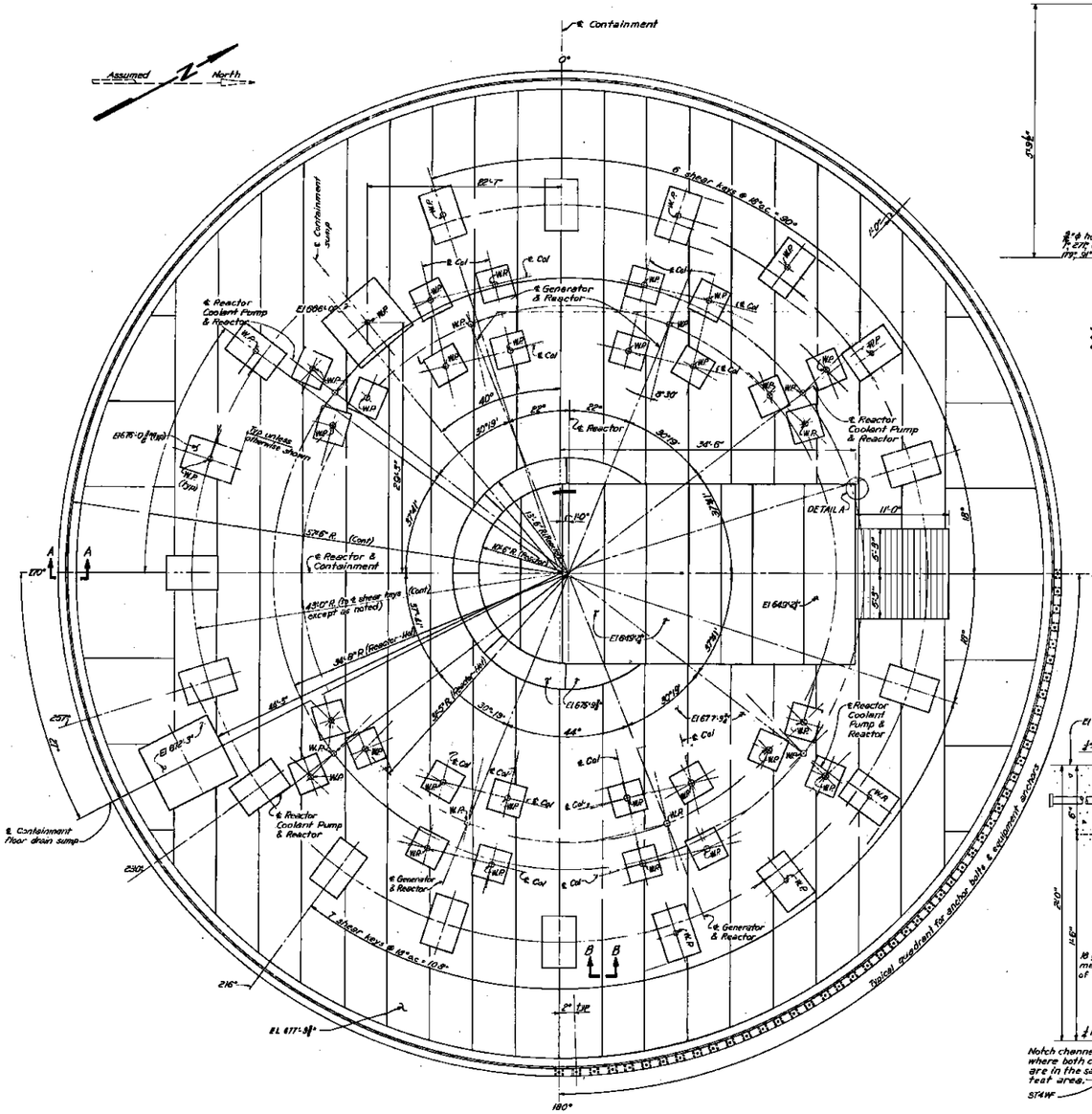

PLAN - BOTTOM LINER PLATE
UNIT 1 AS SHOWN
UNIT 2 OPP HAND
For leakage ℄s & ℄ see sections & details

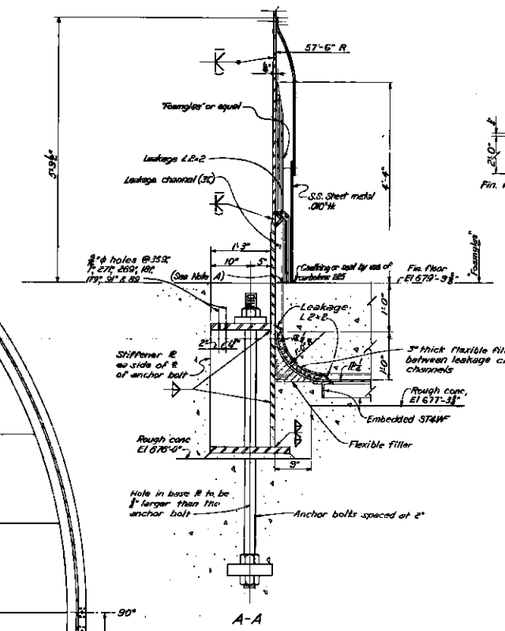

A-A

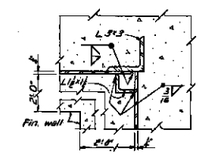

DETAIL A
TYPICAL CORNER

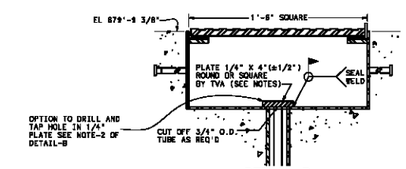

DETAIL B
(ALTERNATE TUBING SEAL DETAIL)

DETAIL B NOTES:
1. THE TEST CONNECTIONS AND THE TEST CONNECTION BOXES ARE NONSAFETY-RELATED NONSTRUCTURAL COMPONENTS WHICH SUPPORT INSPECTION OF THE SAFETY-RELATED SCV.
2. IF THE TEST CONNECTION BOX REQUIRES THE 1/4" PLATE SHOWN IN DETAIL B, THEN DRILL AND TAP A HOLE IN THE CENTER OF THE 1/4" PLATE TO ACCOMMODATE A FITTING SUITABLE FOR EITHER CONDUCTING A LLRT AT THIS LOCATION OR BEING PLUGGED/SEALED WHEN LLRT IS NOT BEING PERFORMED AT THIS LOCATION.
3. AFTER LLRT, OPTION TO SEAL HOLE EITHER:
   A) SEAL WELD HOLE
   B) USE PLUG TO FILL HOLE AND SEAL WELD PLUG
   C) USE PLATE 1/4" X 1" (±1/4") ROUND OR SQUARE & SEAL WELD

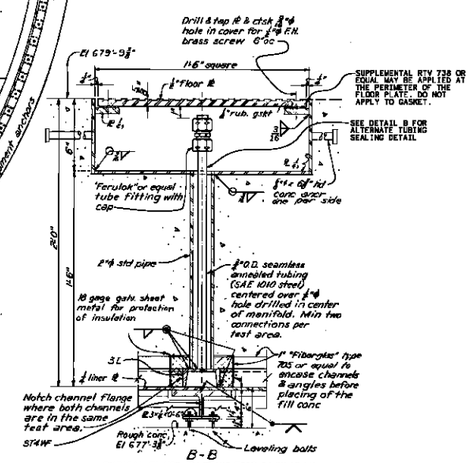

B-B
TYPICAL PLATE JOINT AND TEST CONNECTION

All elevations and dimensions are computed to the inside of the containment shell, unless noted.
Reactor building is a class I structure.

SEQUOYAH NUCLEAR PLANT
FINAL SAFETY
ANALYSIS REPORT

FIGURE 3.8.2-7
STRUCTURAL STEEL CONTAINMENT VESSEL ANCHOR BOLT PLAN & BASE DET
(REVISED BY AMENDMENT 27)

CAD MAINTAINED DRAWING

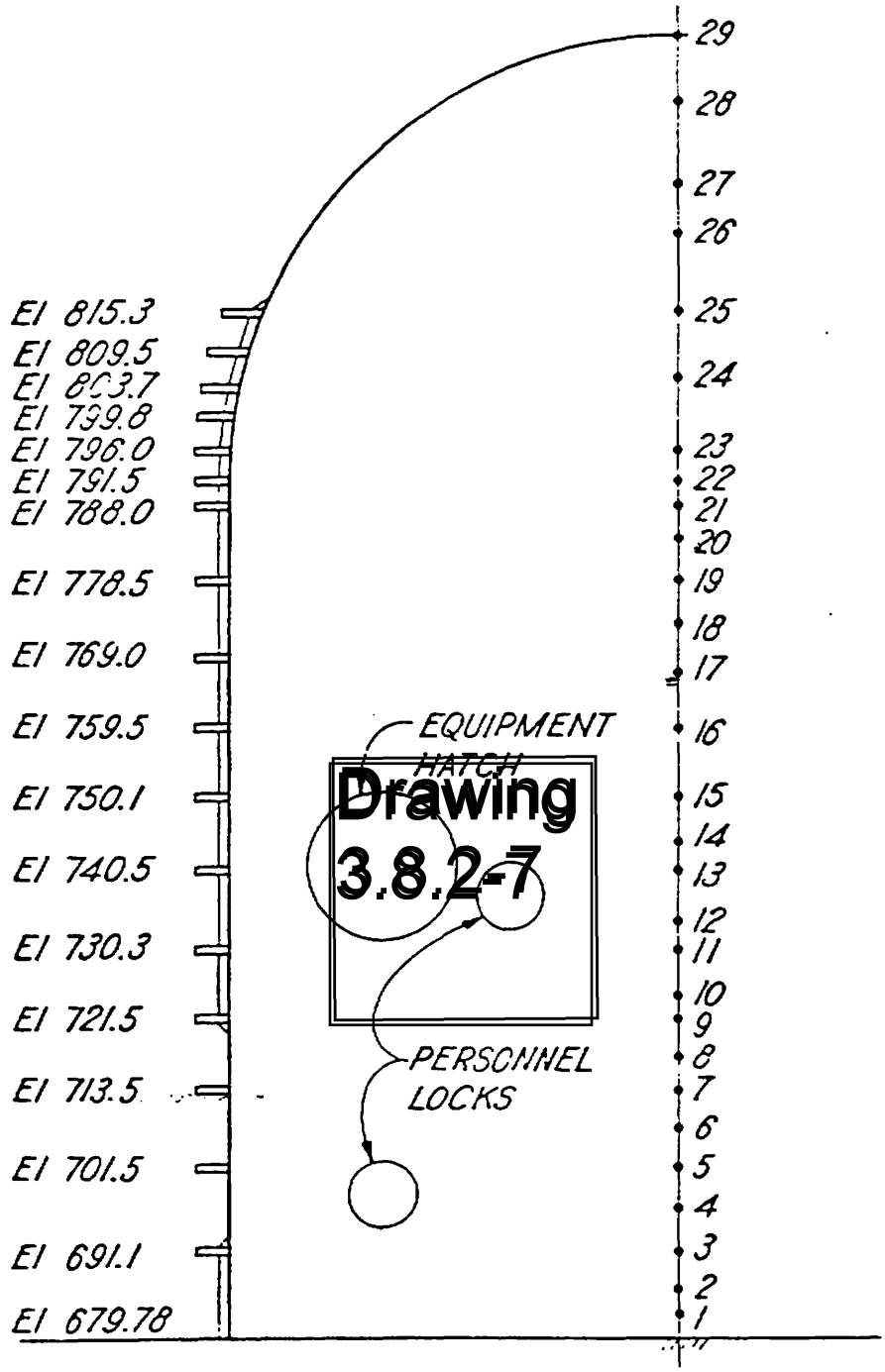

FIGURE 3.8.2-8

Steel Containment Vessel, Lumped Mass Model for Dynamic Analysis

Revised by Amendment 13

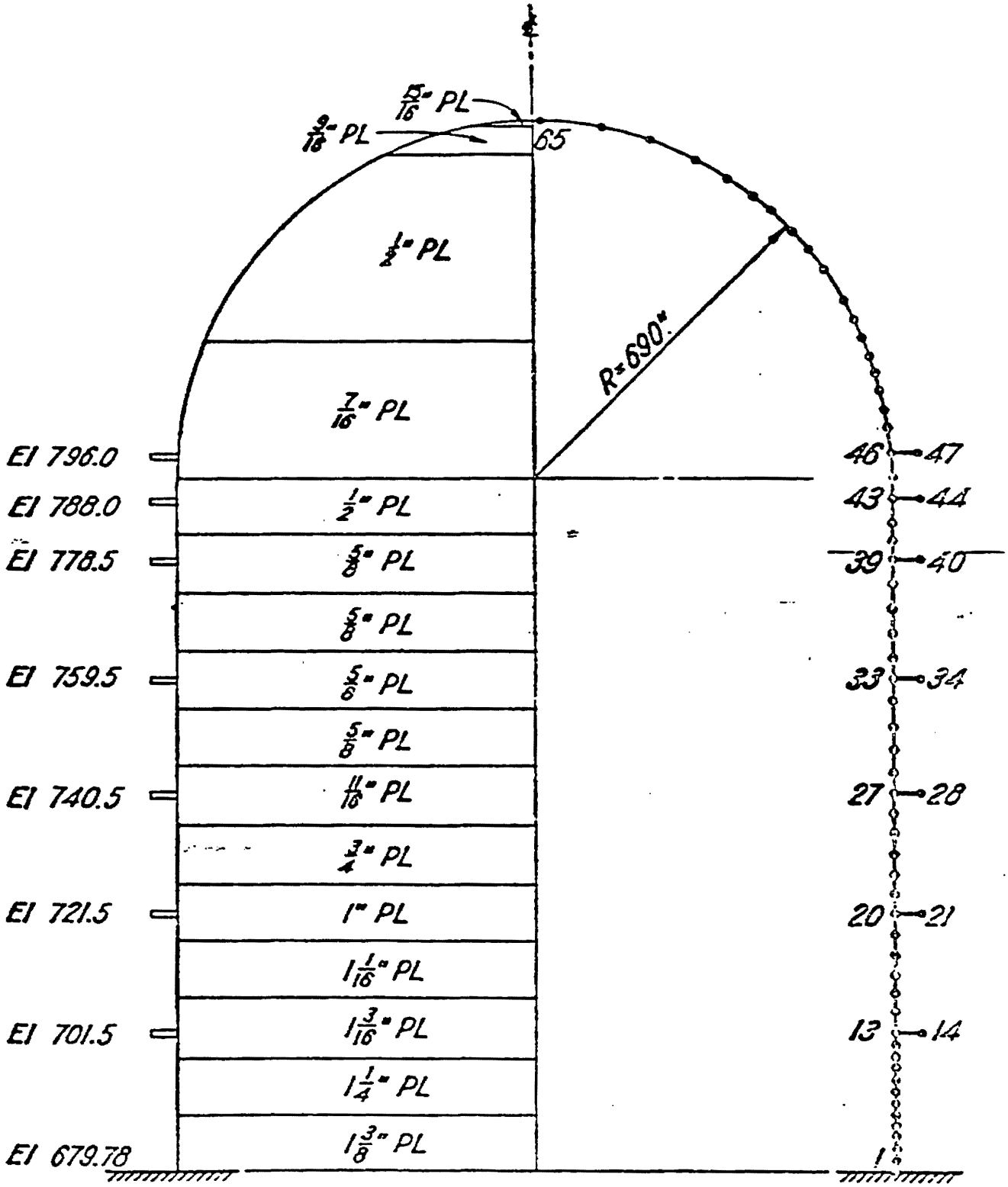

FIGURE 3.8.2-9

Steel Containment Vessel
Finite Element Model

Revised by Amendment 13

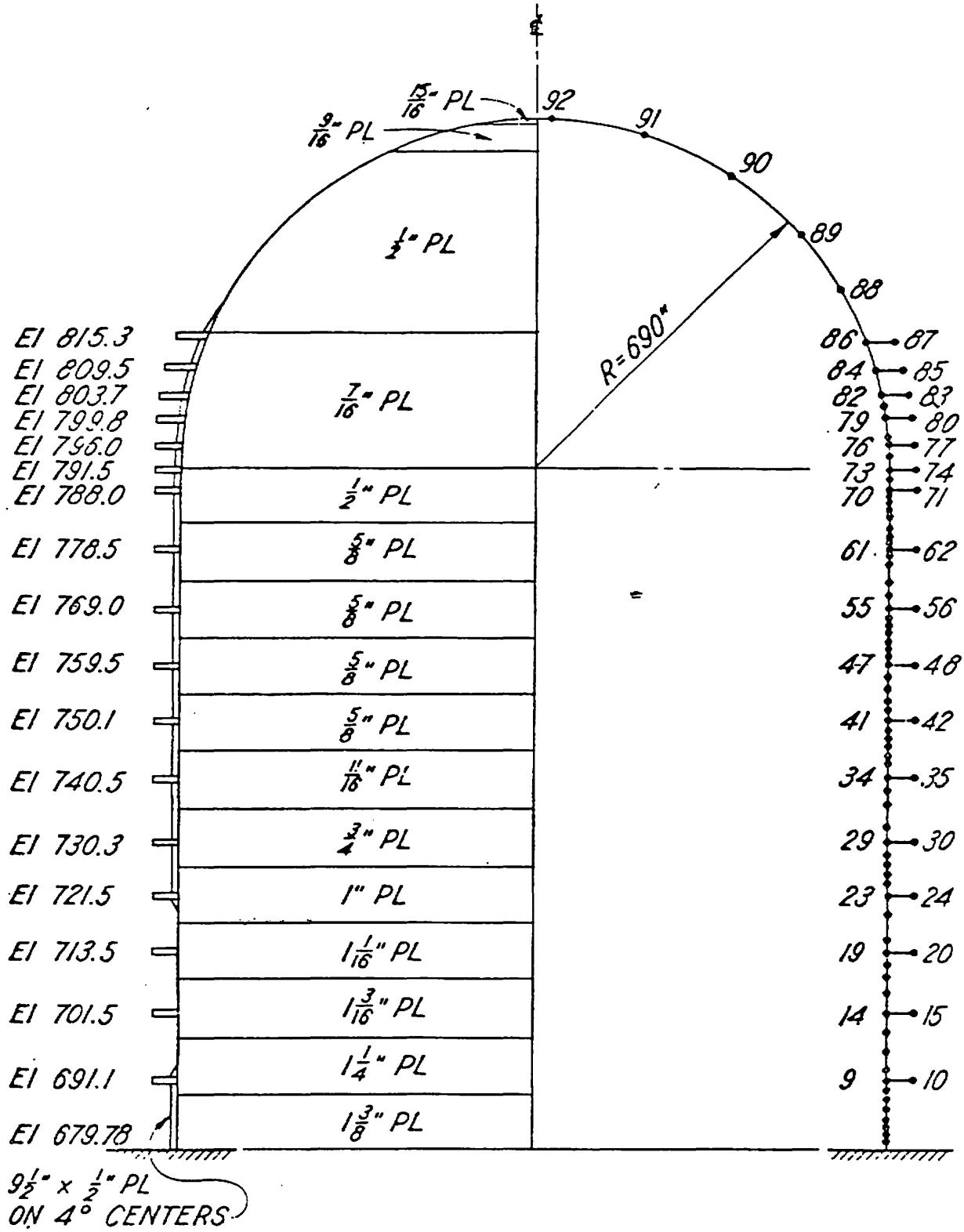

FIGURE 3.8.2-10

Steel Containment Vessel
Finite Element Model

Revised by Amendment 13

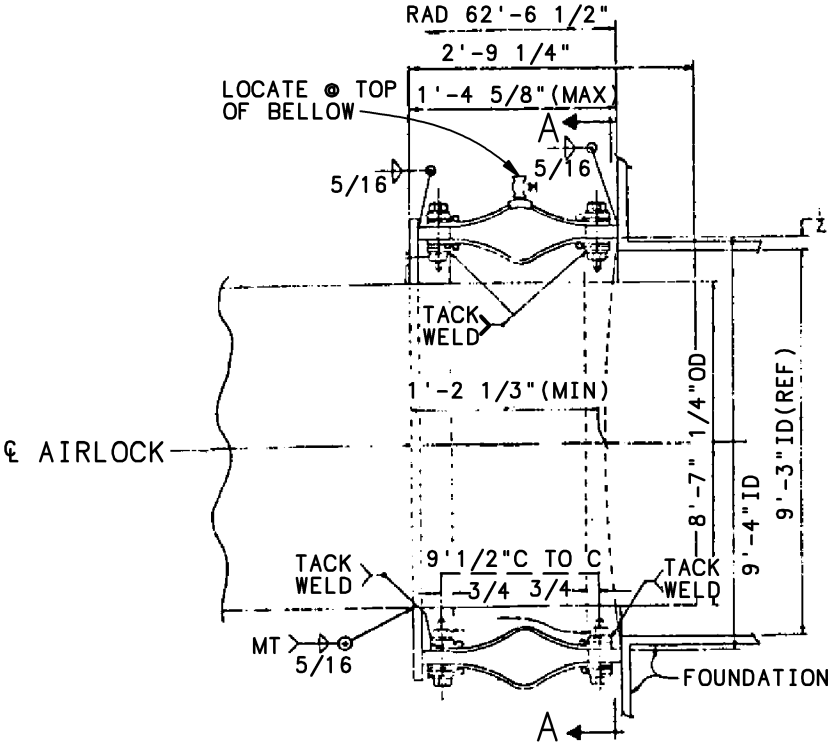

ELEVATION OF BELLOWS FOR PERSONNEL LOCKS

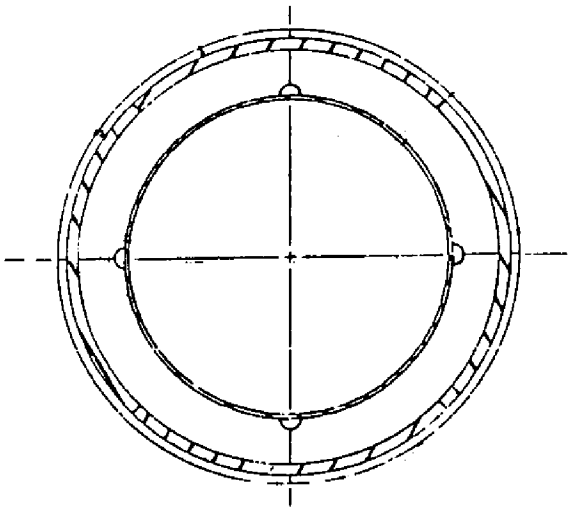

AA

SEQUOYAH NUCLEAR PLANT
FINAL SAFETY ANALYSIS REPORT

FIGURE 3.8.2-11
EXPANSION BELLOWS FOR PERSONNEL LOCKS
(REVISED BY AMENDMENT 13)

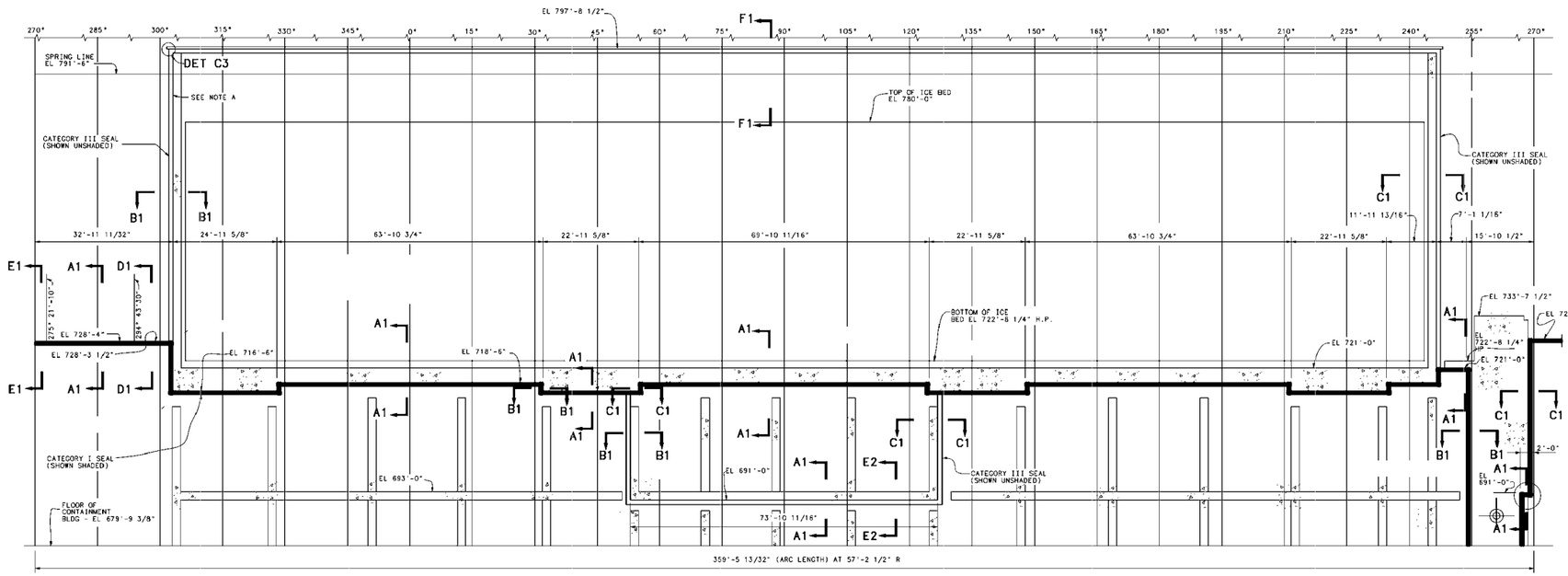

DEVELOPED INTERIOR ELEVATION

UNIT 1 SHOWN
UNIT 2 SIMILAR & OPPOSITE HAND

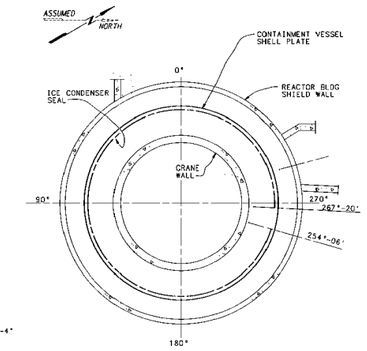

KEY PLAN

NTS

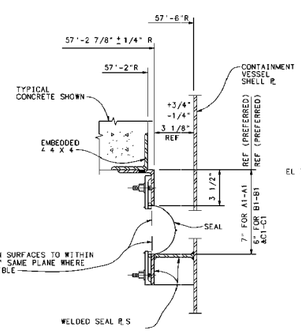

SECTIONS A1-A1, B1-B1 & C1-C1

A1-A1 AS SHOWN
C1-C1 AS SHOWN ROTATED 90° CW
B1-B1 OPP HAND, ROTATED 90° CCW

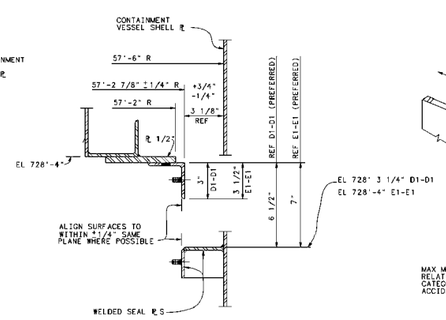

D1-D1 & E1-E1

D1-D1 AS SHOWN AND NOTED
E1-E1 AS NOTED
SEAL NOT SHOWN

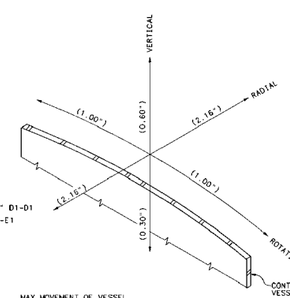

MAX MOVEMENT OF VESSEL RELATIVE TO CONCRETE AT CATEGORY I SEAL FOR COMBINED ACCIDENT AND EARTHQUAKE CONDITION.

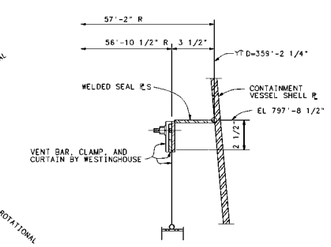

F1-F1

TYP SECTION AT VENT CURTAIN

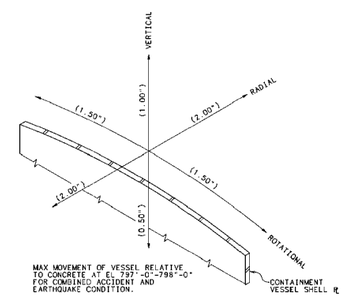

MAX MOVEMENT OF VESSEL RELATIVE TO CONCRETE AT EL 797'-0"-798'-0" FOR COMBINED ACCIDENT AND EARTHQUAKE CONDITION.

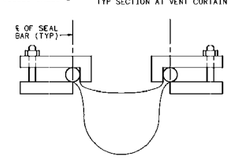

DETAIL A-1

TYPICAL CONFIGURATION

NORMAL OPERATING CONDITIONS:
DIFFERENTIAL PRESSURE ON SEAL----------NEGLIGIBLE PSI
MAXIMUM TEMPERATURE----------120° F
RADIATION RATE----------2 RADS/HR
RADIATION FOR 40-YR PROJECT LIFE----------7.0×10^5 RADS

ACCIDENT CONDITION FOR 12-HR SEAL DESIGN LIFE:
DIFFERENTIAL PRESSURE ON SEAL
(LOWER COMPARTMENT PRESSURIZED)----------15 PSI
MAXIMUM TEMPERATURE----------327° F

RADIATION FOR 12 HR----------8.0×10^7 RADS

SEQUOYAH NUCLEAR PLANT
FINAL SAFETY
ANALYSIS REPORT

FIGURE 3.8.3-1
SEALS BETWEEN ICE CONDENSER AND CONTAINMENT VESSEL ARRANGEMENT
(REVISED BY AMENDMENT 13)

DRAWING SERVICES UNIT
PROCAD MAINTAINED DRAWING
THIS CONFIGURATION CONTROL DRAWING IS MAINTAINED BY THE SQN CAD UNIT AND IS PART OF THE TVA PROCADAM DATABASE.
COMPUTER GRAPHICS

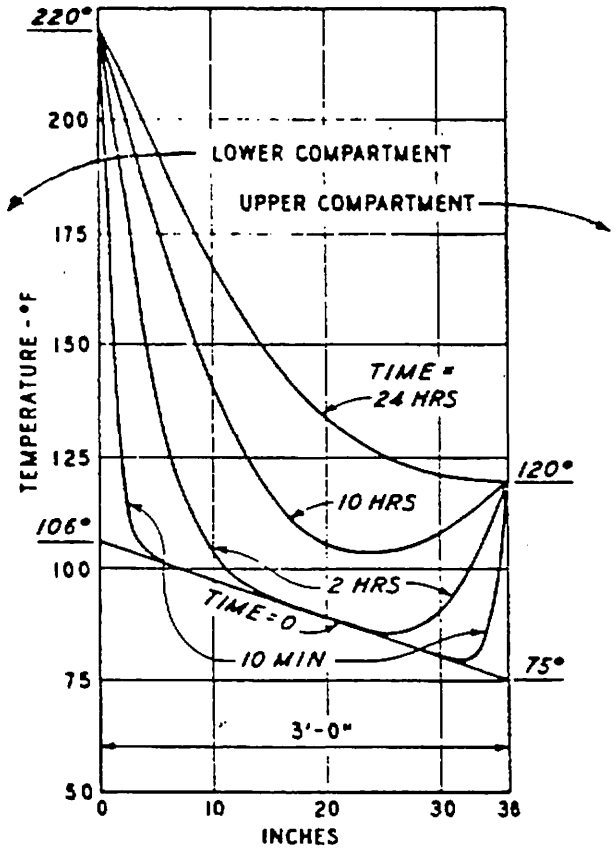

FIGURE 3.8.3-2
TEMPERATURE GRADIENT

Revised by Amendment 13

Security-Related Information - Figure 3.8.4-1 Withhold Under 10 CFR 2.390

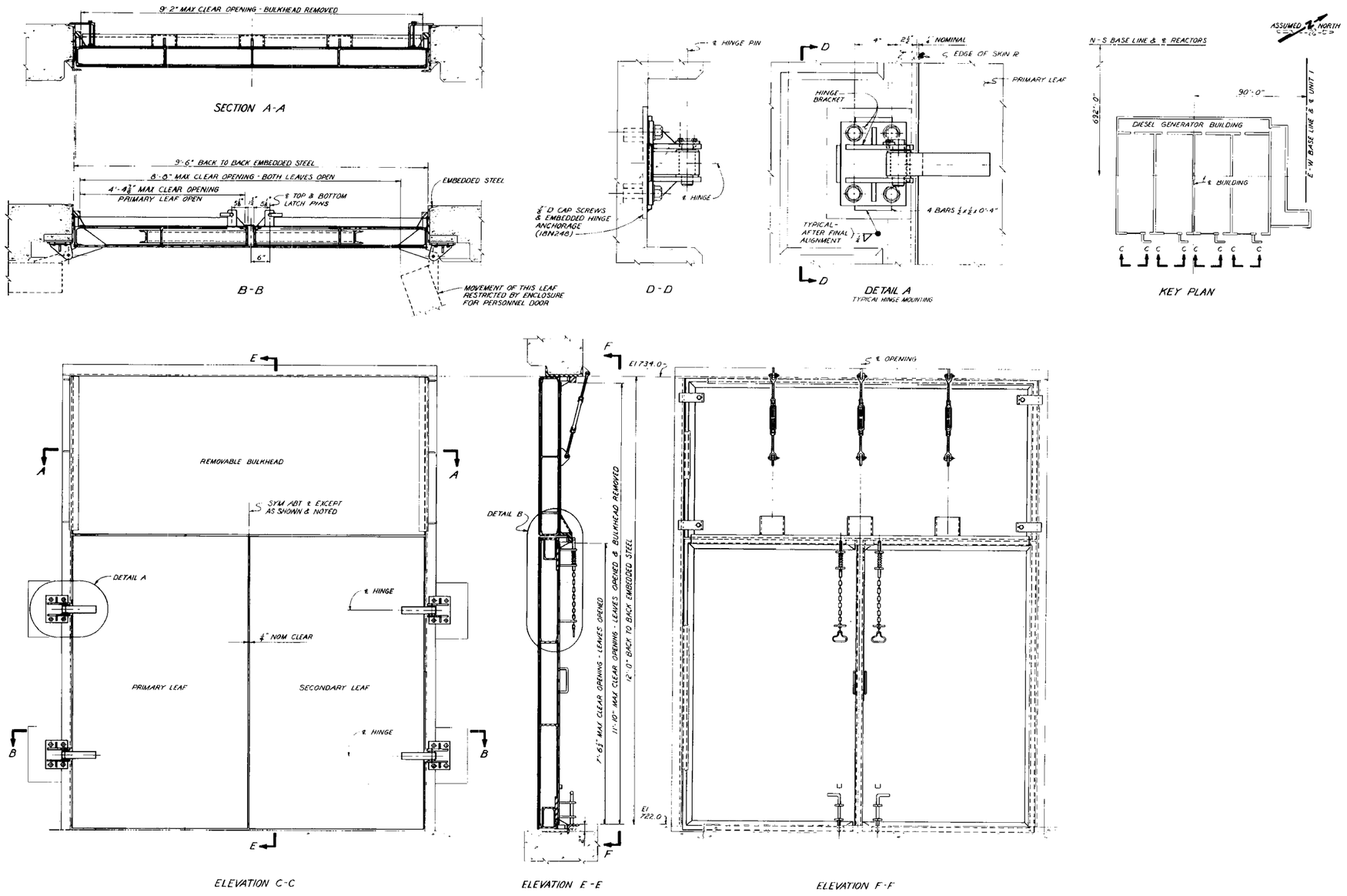

SEQUOYAH NUCLEAR PLANT
FINAL SAFETY
ANALYSIS REPORT

FIGURE 3.8.4-2 D.G. BUILDING
DOORS AND BULKHEAD ARRANGEMENT

(REVISED BY AMENDMENT 13)

DRAWING SERVICES UNIT
PROCAD MAINTAINED DRAWING
THIS CONFIGURATION CONTROL DRAWING IS MAINTAINED BY THE SQN CAD UNIT AND IS PART OF THE TVA PROCADAM DATABASE.
COMPUTER GRAPHICS

Security-Related Information - Figure 3.8.4-3 Withhold Under 10 CFR 2.390

Security-Related Information - Figure 3.8.4-4 Withhold Under 10 CFR 2.390

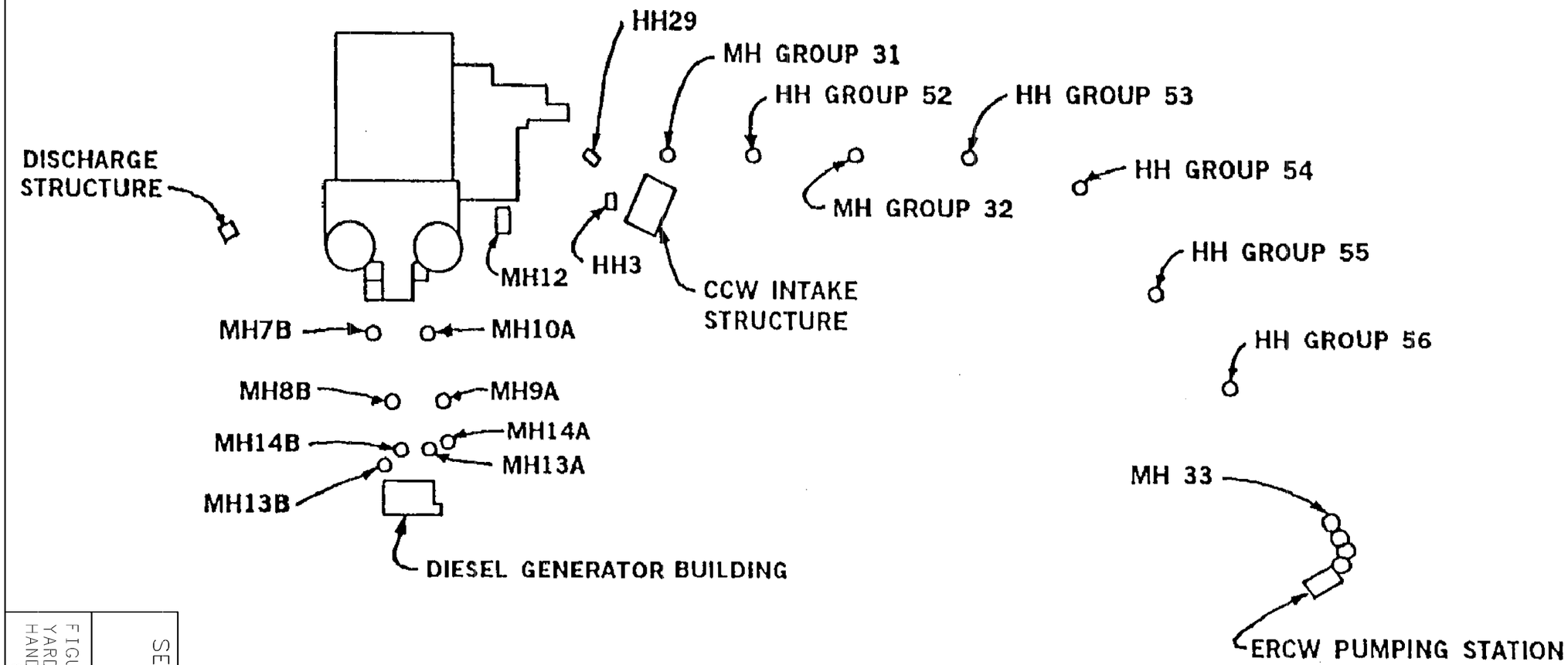

SEQUOYAH NUCLEAR PLANT
FINAL SAFETY
ANALYSIS REPORT

FIGURE 3.8.4-5 CATEGORY 1
YARD ELECTRICAL MANHOLES AND
HANDHOLES
(REVISED BY AMENDMENT 13)

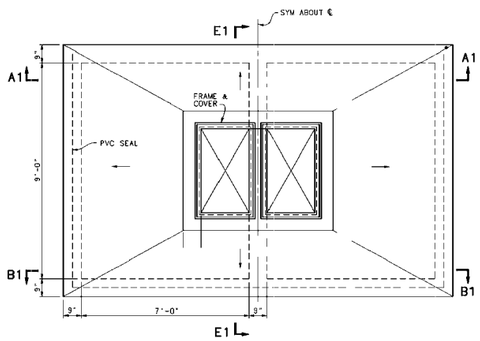

PLAN - TOP SLAB

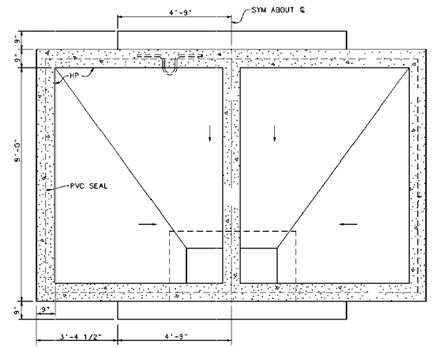

PLAN - BASE SLAB

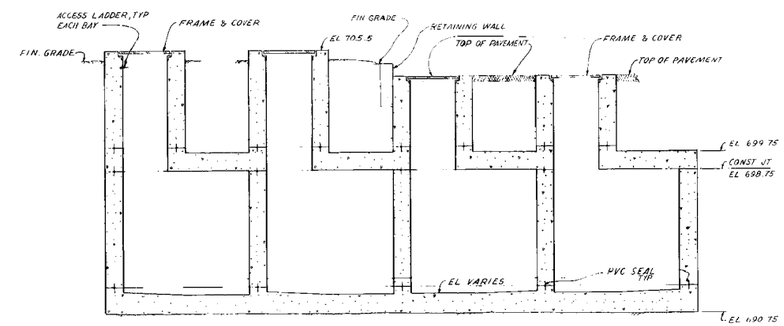

F6 - F6

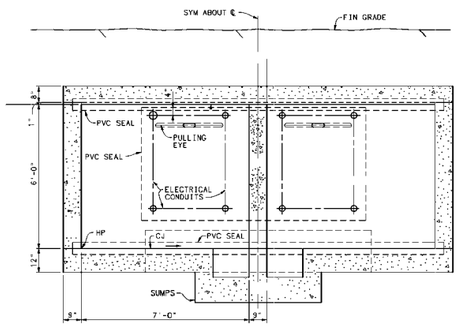

A1-A1 & B1-B1

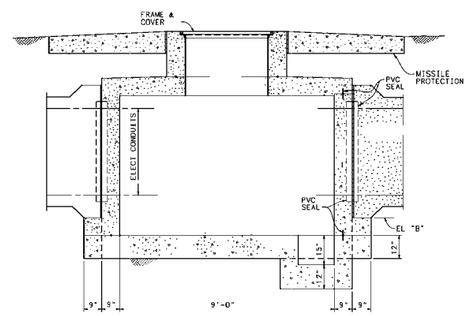

E1-E1

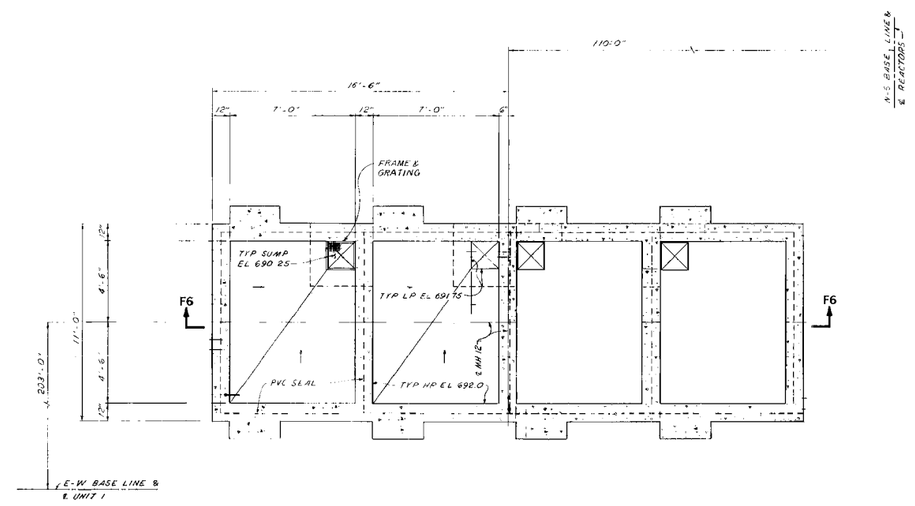

BASE PLAN - EL 692.0
ELECTRICAL MANHOLE 12

TYPICAL ELECTRICAL MANHOLES
NO. 7-B THRU 10-A

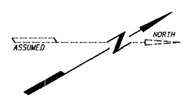

NOTES:
1. MANHOLE NO. 7B THROUGH 10A AND 12 ARE CLASS I STRUCTURES AND QUALITY ASSURANCE IS REQUIRED.

SEQUOYAH NUCLEAR PLANT
FINAL SAFETY
ANALYSIS REPORT

FIGURE 3.8.4-6

CONCRETE-MANHOLES & HANDHOLES-OUTLINE
(REVISED BY AMENDMENT 13)

DRAWING SERVICES UNIT
PROCAD MAINTAINED DRAWING
THIS CONFIGURATION CONTROL DRAWING IS MAINTAINED BY THE SON CAD UNIT AND IS PART OF THE TVA PROCADAM DATABASE
COMPUTER GRAPHICS

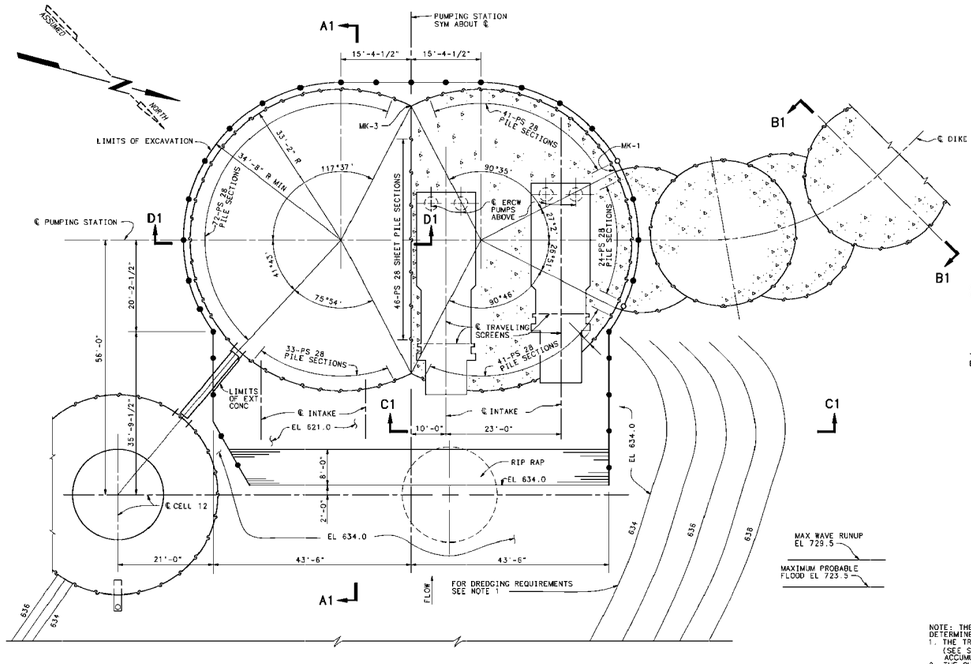

PLAN-EL 633.5±

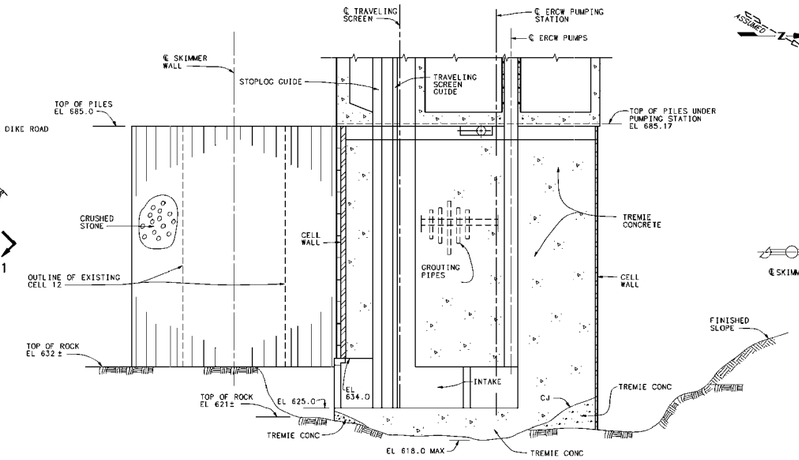

A1-A1

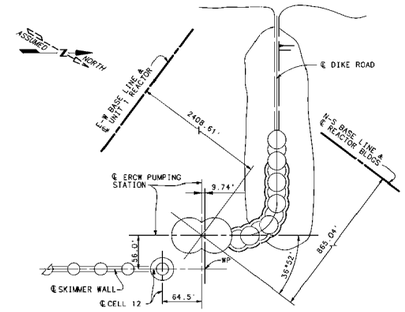

KEY PLAN

NOTE: THE FOLLOWING CRITERIA SHALL BE USED TO DETERMINE WHEN DREDGING OF THE ERCW CHANNEL IS REQUIRED.

1. THE TRENCH IN FRONT OF THE PUMPING STATION INTAKES (SEE SECTION A1-A1) SHALL BE DREDGED WHEN THE SEDIMENT ACCUMULATES TO ELEVATION 627.5.
2. THE CHANNEL AS SHOWN IN PLAN-EL 633.5 SHALL BE DREDGED WHEN SEDIMENT ACCUMULATES TO ELEVATION 635.0.
3. THE DREDGING OPERATION SHOULD RETURN THE BOTTOM ELEVATION TO THE ORIGINAL DESIGN REQUIREMENTS OF ELEVATION 621.0 PLUS OR MINUS 0.5 FEET IN THE TRENCH AT THE PUMPING STATION INTAKES AND ELEVATION 634.0 PLUS OR MINUS 0.5 FEET IN THE CHANNEL. THE SIDE SLOPES IN THE CHANNEL SHALL BE 4 ON 1 OR FLATTER.
4. ISOLATED RUBBLE, INCLUDING THE RIP-RAP FROM SKIMMER WALL CELL #13 MAYBE LEFT IN PLACE.
5. PRIOR TO INITIATING THE DREDGING OPERATION A SAFETY ASSESSMENT/EVALUATION (SA/SE) SHALL BE WRITTEN ADDRESSING THE TYPE OF DREDGING TO BE USED AS WELL AS PRECAUTIONS TO BE TAKEN DURING THE DREDGING TO ENSURE PLANT OPERATION IS NOT ADVERSELY AFFECTED.

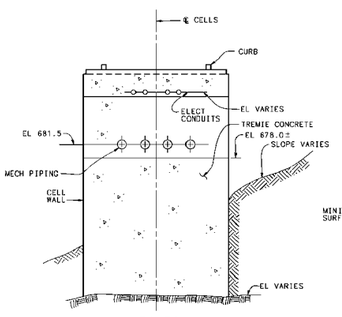

B1-B1

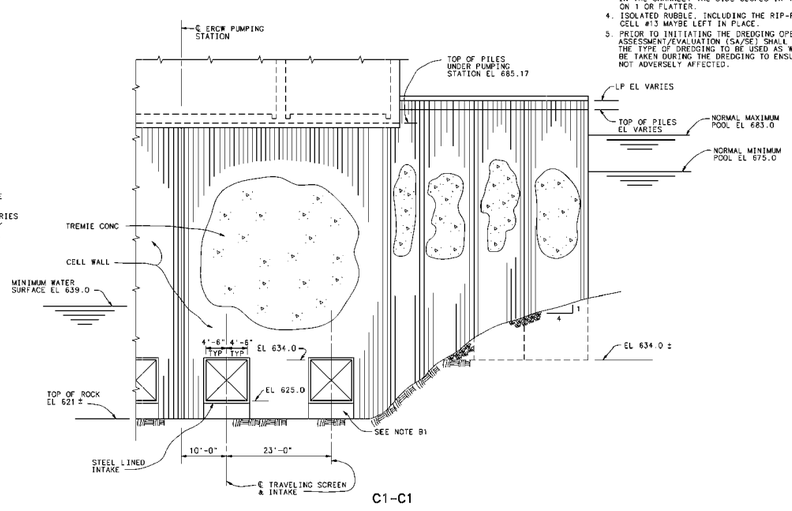

C1-C1

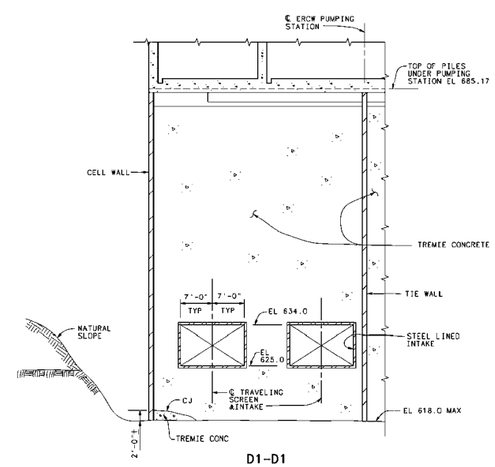

D1-D1

SEQUOYAH NUCLEAR PLANT
FINAL SAFETY
ANALYSIS REPORT

FIGURE 3.8.4-7

CONCRETE-ERCW PUMPING STATION AND ERCW CHANNEL
(REVISED BY AMENDMENT 19)

CAD MAINTAINED DRAWING

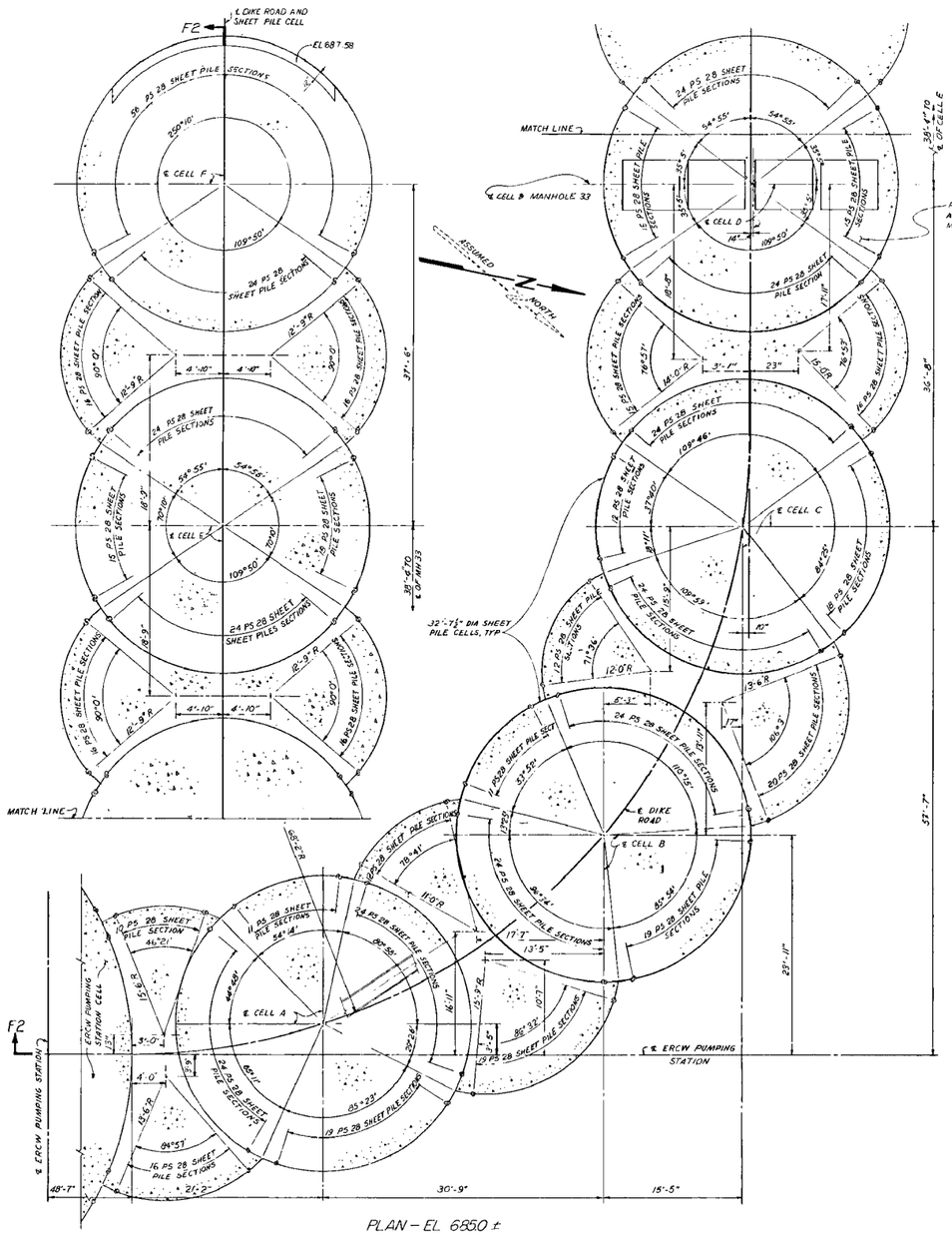

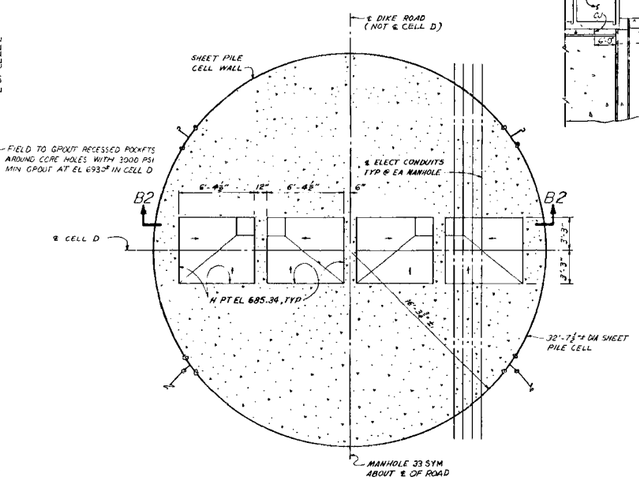

PART PLAN EL 685.0
NTS

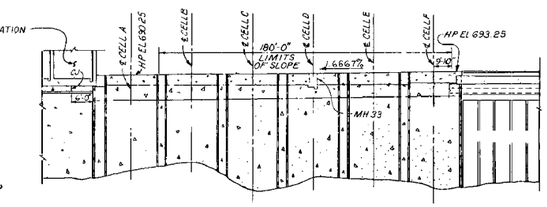

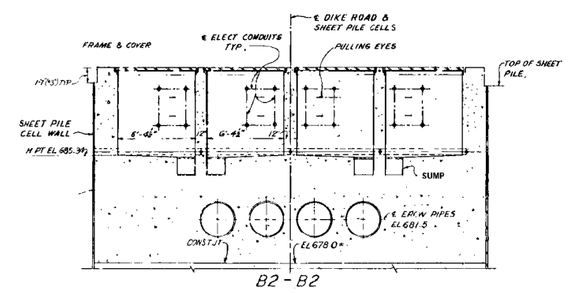

SEQUOYAH NUCLEAR PLANT
FINAL SAFETY
ANALYSIS REPORT

FIGURE 3.8.4-8
CONCRETE-ERCW PUMPING STATION

(REVISED BY AMENDMENT 13)

DRAWING SERVICES UNIT
PROCAD MAINTAINED DRAWING
THIS CONFIGURATION CONTROL DRAWING IS MAINTAINED BY THE SQN CAD UNIT AND IS PART OF THE TVA PROCADAM DATABASE.
COMPUTER GRAPHICS

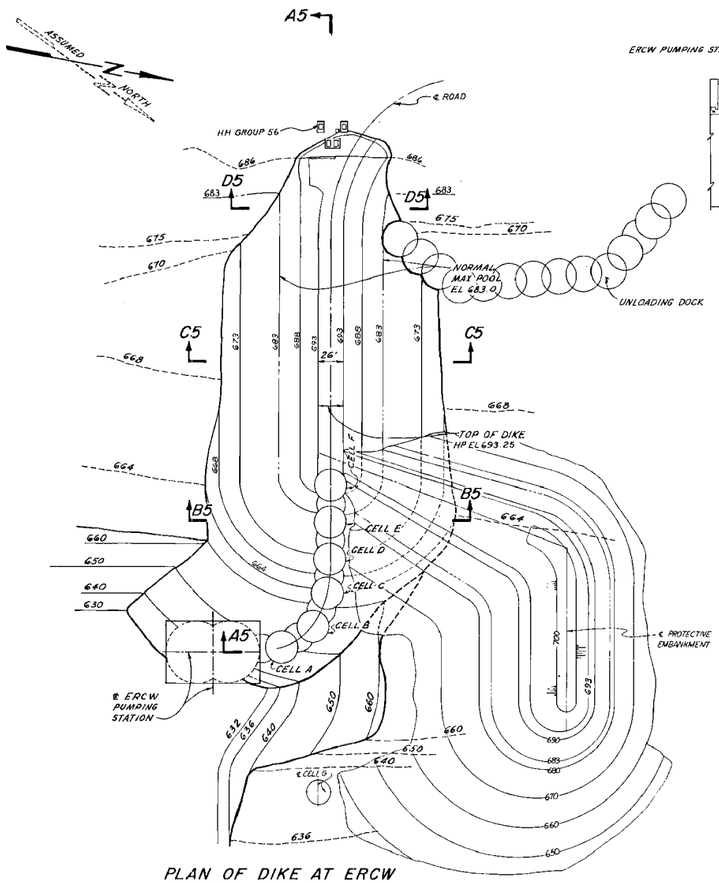

PLAN OF DIKE AT ERCW PUMPING STATION

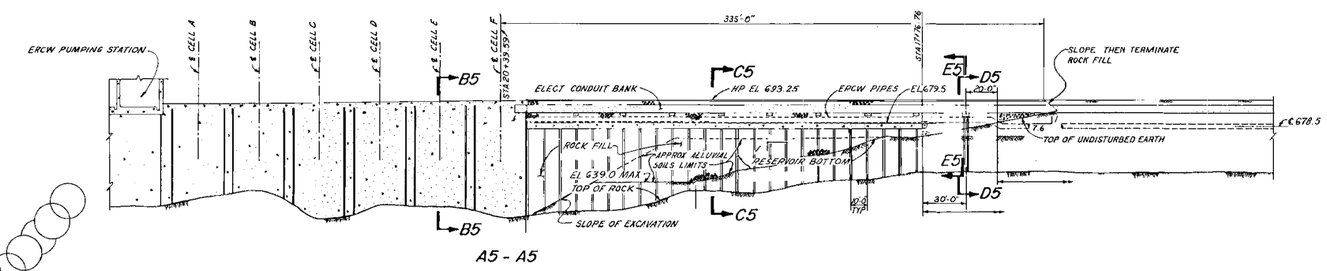

A5 - A5

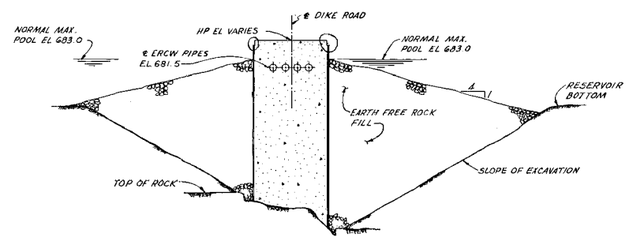

B5-B5

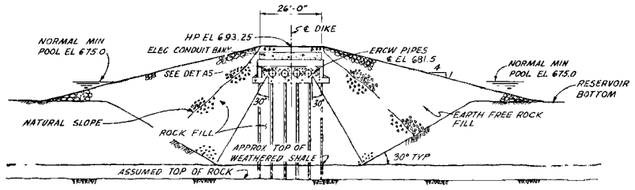

C5-C5

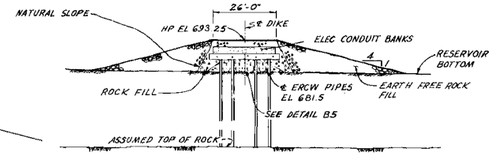

D5-D5

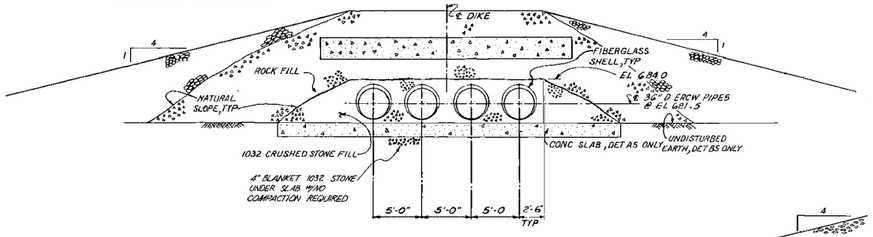

DETAIL A5 & B5

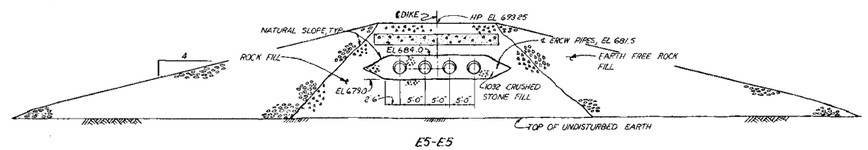

E5-E5

SEQUOYAH NUCLEAR PLANT
FINAL SAFETY
ANALYSIS REPORT

FIGURE 3.8.4-9

CONCRETE ERCW SKIMMER WALL & UNDERWATER DAM
(REVISED BY AMENDMENT 19)

CAD MAINTAINED DRAWING

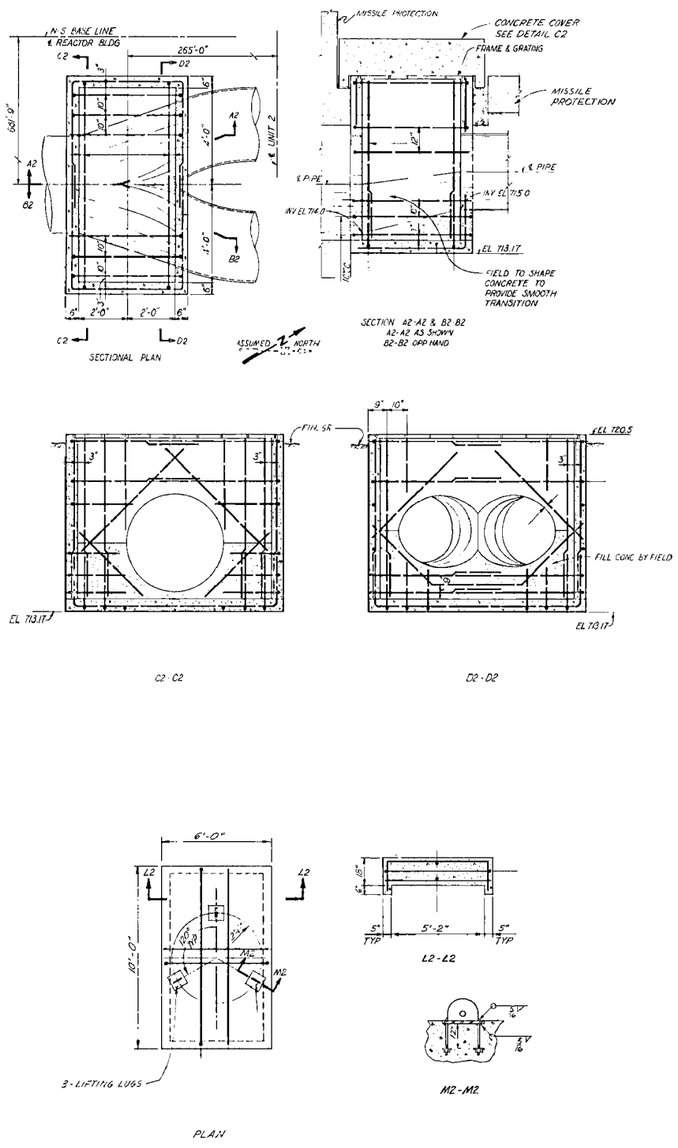

5. THE ERCW DISCHARGE BOX IS A CATEGORY I STRUCTURE AND QUALITY ASSURANCE IS REQUIRED.

SEQUOYAH NUCLEAR PLANT
FINAL SAFETY
ANALYSIS REPORT

FIGURE 3.8.4-10
CONCRETE ERCW DISCHARGE BOX

(REVISED BY AMENDMENT 13)

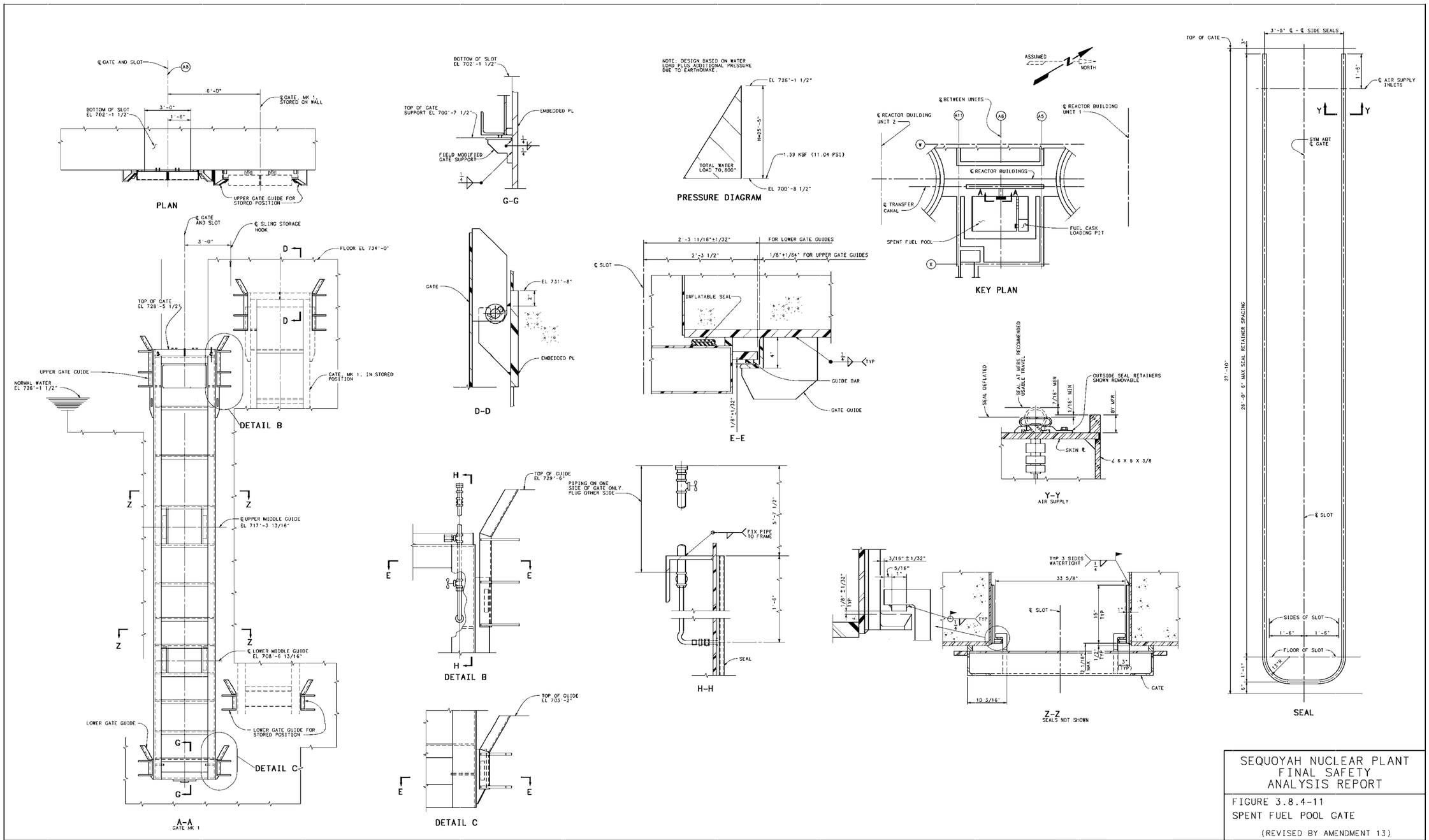

SEQUOYAH NUCLEAR PLANT
FINAL SAFETY
ANALYSIS REPORT

FIGURE 3.8.4-11
SPENT FUEL POOL GATE

(REVISED BY AMENDMENT 13)

DRAWING SERVICES UNIT
PROCAD MAINTAINED DRAWING
THIS CONFIGURATION CONTROL DRAWING IS MAINTAINED BY THE SQN CAD UNIT AND IS PART OF THE TVA PROCADAM DATABASE.
COMPUTER GRAPHICS

Security-Related Information - Figure 3.8.6-1 Withhold Under 10 CFR 2.390

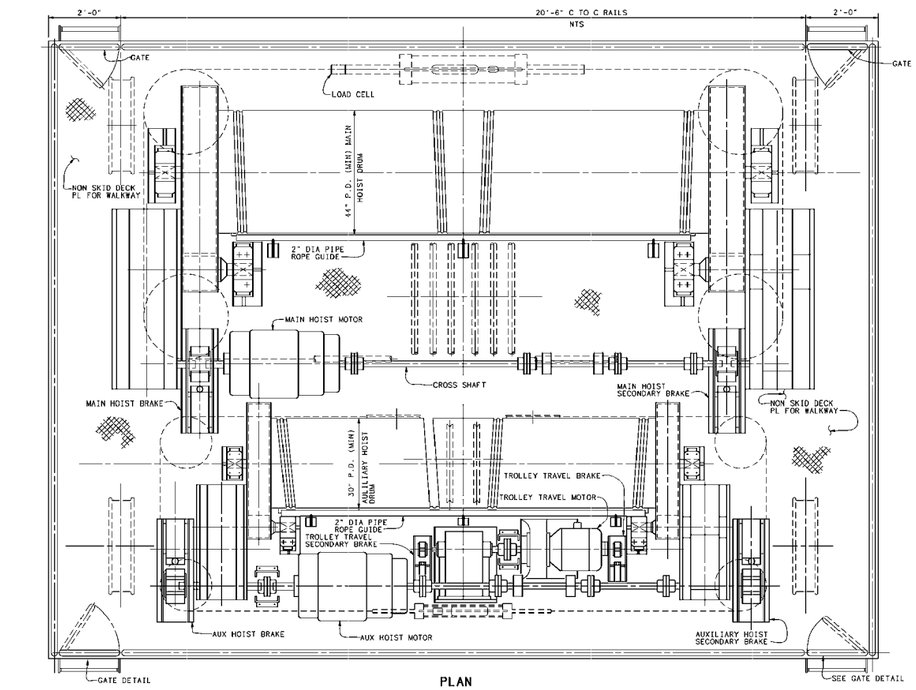

PLAN

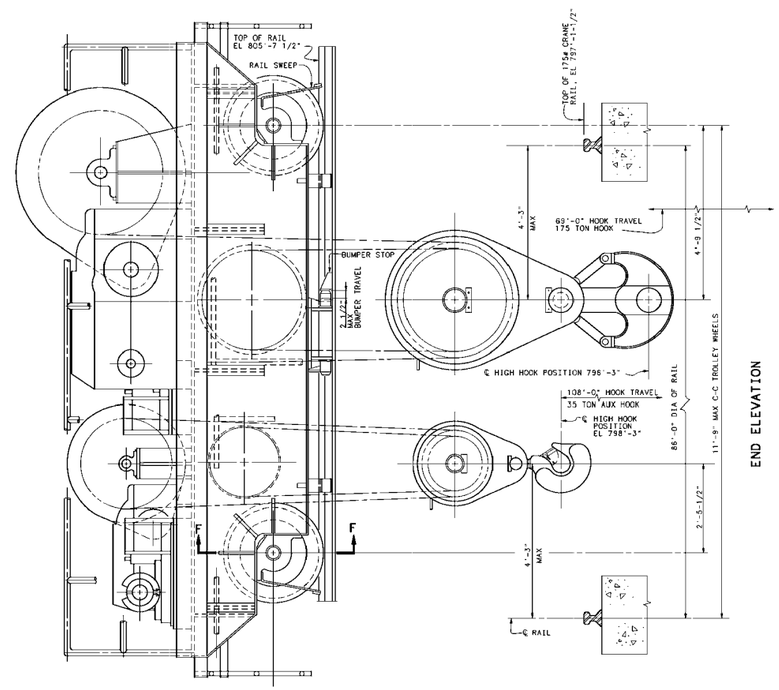

END ELEVATION

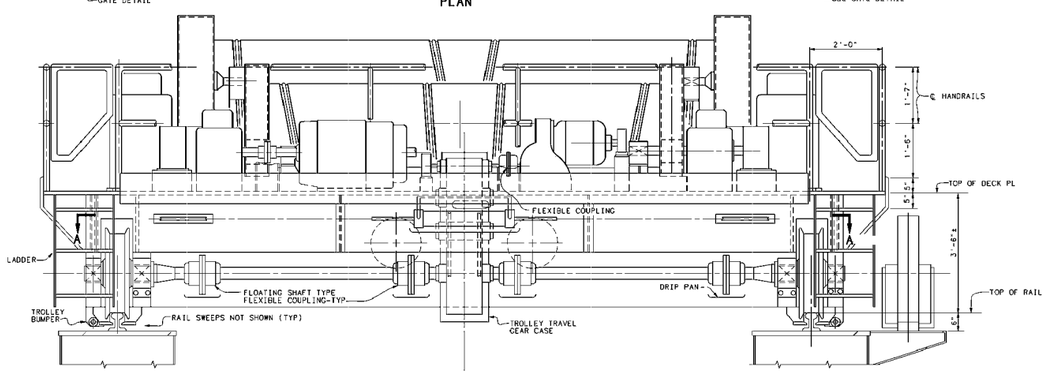

ELEVATION
HOOKS AND REEVING NOT SHOWN
CROSS SHAFT NOT SHOWN

SEQUOYAH NUCLEAR PLANT
FINAL SAFETY
ANALYSIS REPORT

FIGURE 3.8.6-2
RB 175 TON POLAR CRANES TROLLEY

(REVISED BY AMENDMENT 13)

DRAWING SERVICES UNIT
PROCAD MAINTAINED DRAWING
THIS CONFIGURATION CONTROL DRAWING IS MAINTAINED BY THE SQN CAD UNIT AND IS PART OF THE TVA PROCADAM DATABASE.
COMPUTER GRAPHICS

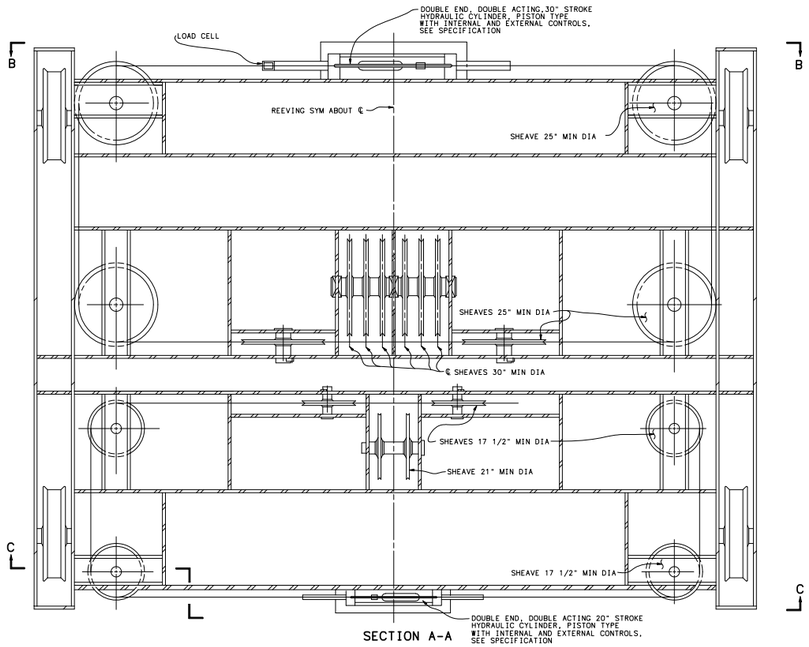

SECTION A-A

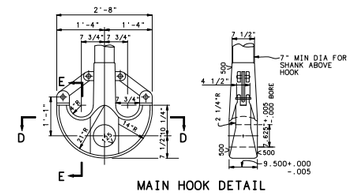

MAIN HOOK DETAIL

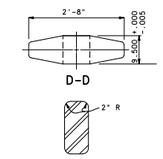

D-D

E-E

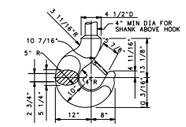

33 TON HOOK OUTLINE

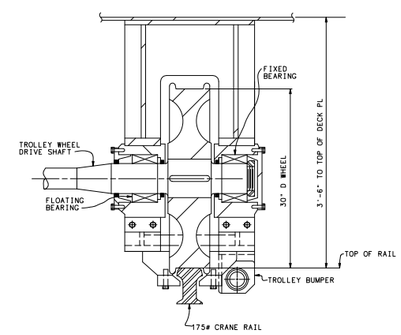

F-F

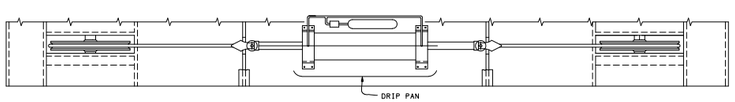

B-B

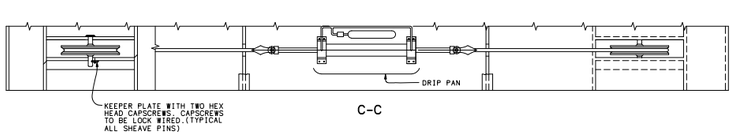

C-C

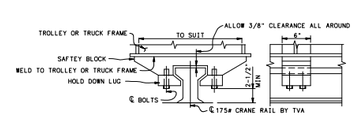

SAFETY BLOCK WITH HOLD DOWN LUGS

4 REQ'D PER TROLLEY
LUGS FOR BRIDGE TRUCKS SIMILAR

DRILL AND TAP SAFTEY BLOCK AND ATTACH HOLD DOWN LUGS WITH BOLTS.EACH HOLD DOWN LUG IS TO RESTRAIN AN UPWARD FORCE OF 10,000#.

SEQUOYAH NUCLEAR PLANT
FINAL SAFETY
ANALYSIS REPORT

FIGURE 3.8.6-3

RB 175 TON POLAR CRANES TROLLEY

(REVISED BY AMENDMENT 28)

DRAWING SERVICES UNIT
PROCAD MAINTAINED DRAWING
THIS CONFIGURATION CONTROL DRAWING IS MAINTAINED BY THE SON CAD UNIT AND IS PART OF THE TVA PROCADAM DATABASE.
COMPUTER GRAPHICS

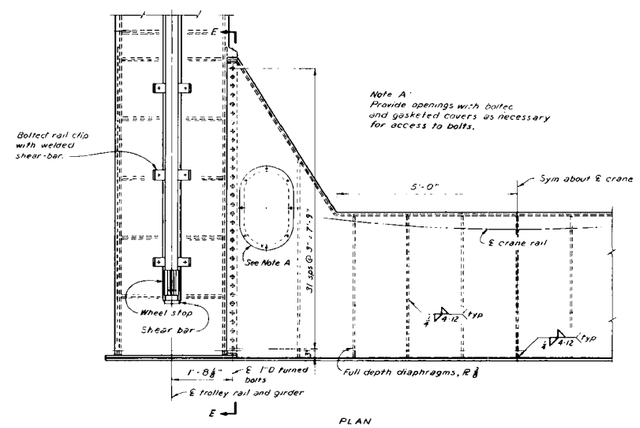

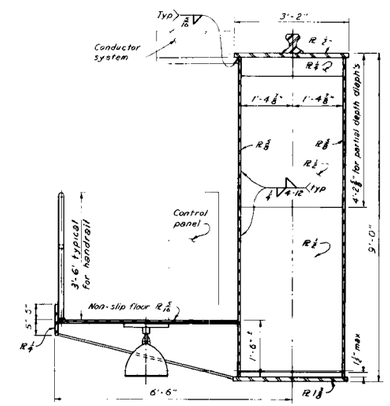

GIRDER AND WALKWAY CROSS SECTION

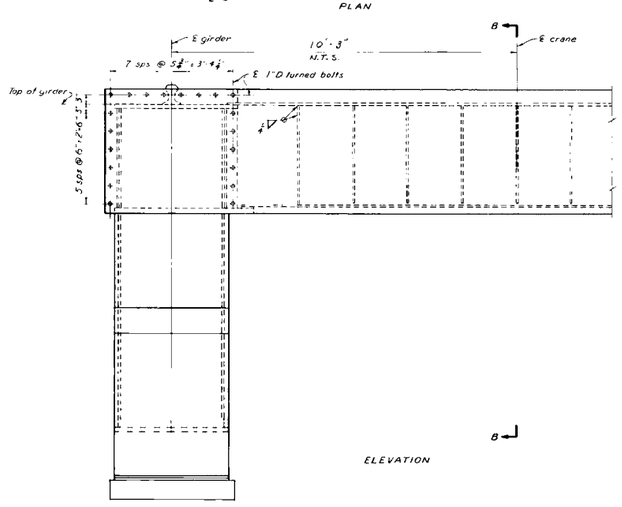

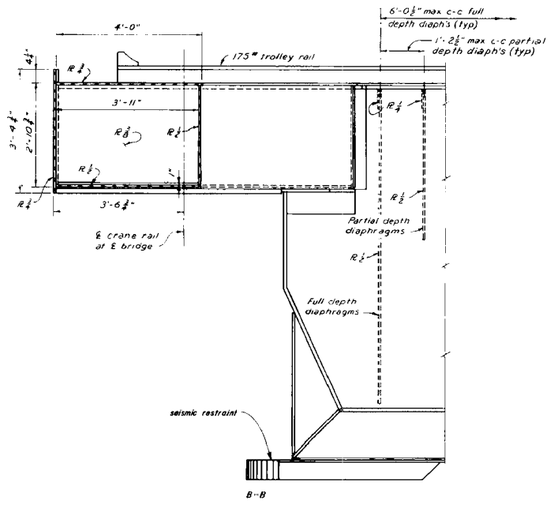

GIRDER AND END TIE CONNECTION
WALKWAYS NOT SHOWN

SEQUOYAH NUCLEAR PLANT
FINAL SAFETY
ANALYSIS REPORT

FIGURE 3.8.6-4
RB 175 TON POLAR CRANES BRIDGE

(REVISED BY AMENDMENT 13)

DRAWING SERVICES UNIT
PROCAD MAINTAINED DRAWING
THIS CONFIGURATION CONTROL DRAWING IS MAINTAINED BY THE SQN CAD UNIT AND IS PART OF THE TVA PROCADAM DATABASE.
COMPUTER GRAPHICS

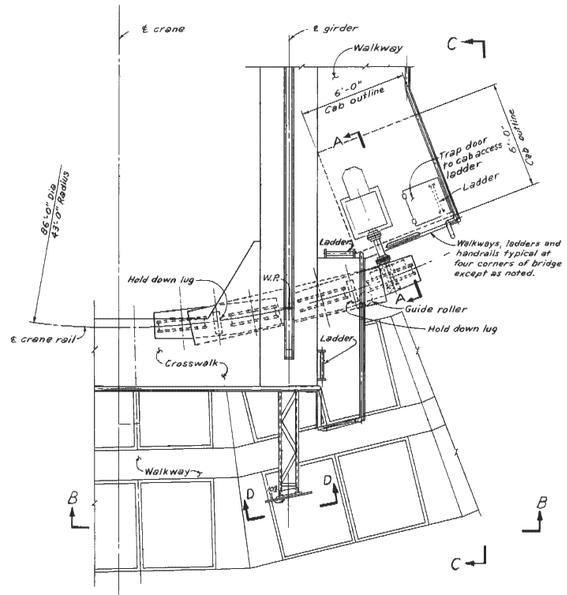

PLAN

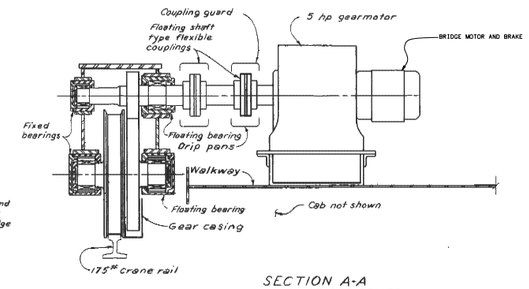

SECTION A-A
TYPICAL FOR BRIDGE DRIVES
4 REQD PER CRANE

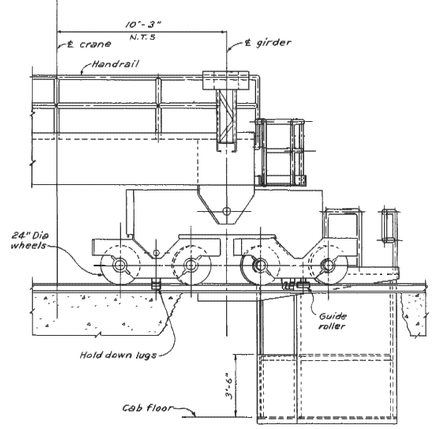

B - B
CRANE DRIVE NOT SHOWN
ICE BLANKET BUMPERS NOT SHOWN

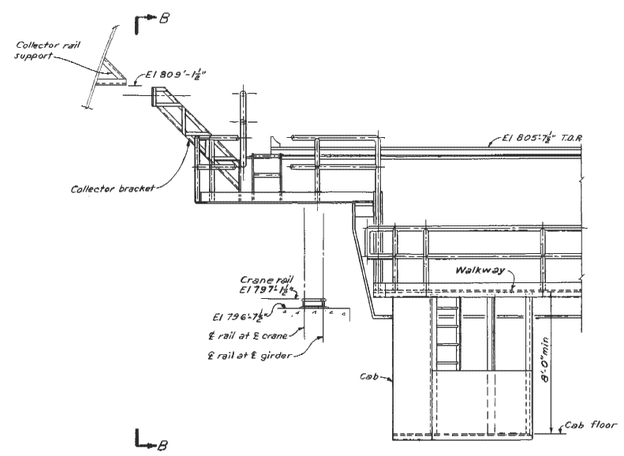

C - C
WHEEL ASSEMBLY & CRANE DRIVE NOT SHOWN

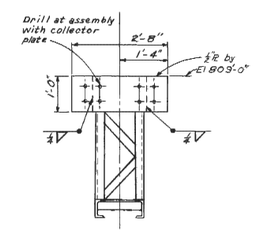

D-D

SEQUOYAH NUCLEAR PLANT
FINAL SAFETY
ANALYSIS REPORT

FIGURE 3.8.6-5
RB 175 TON POLAR CRANES

(REVISED BY AMENDMENT 28)

DRAWING SERVICES UNIT
PROCAD MAINTAINED DRAWING
THIS CONFIGURATION CONTROL DRAWING IS MAINTAINED BY THE SQN CAD UNIT AND IS PART OF THE TVA PROCADAM DATABASE.
COMPUTER GRAPHICS

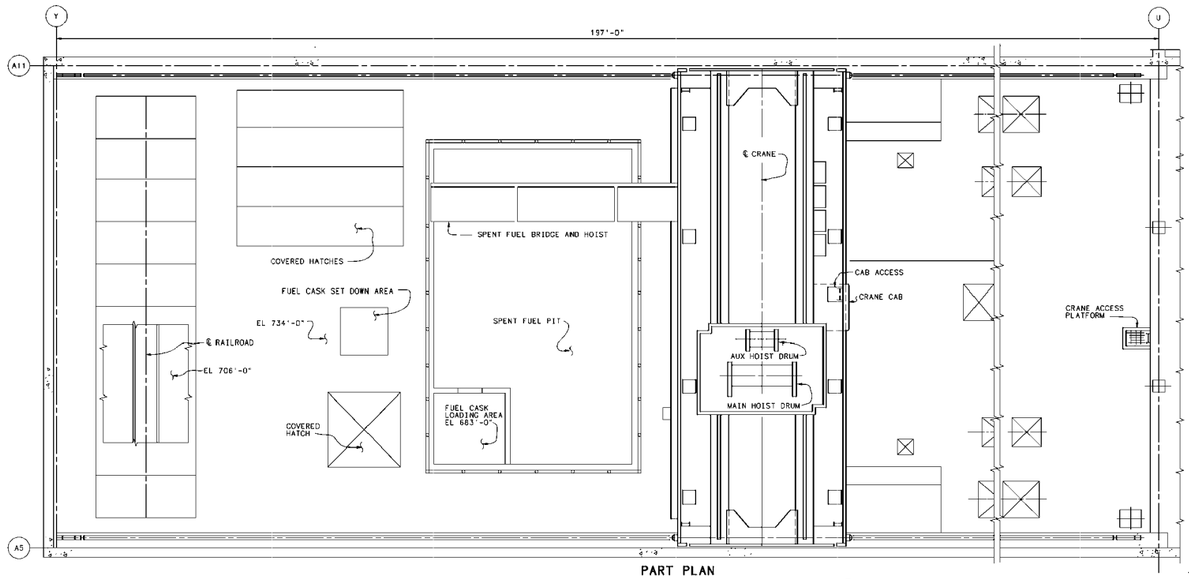

PART PLAN

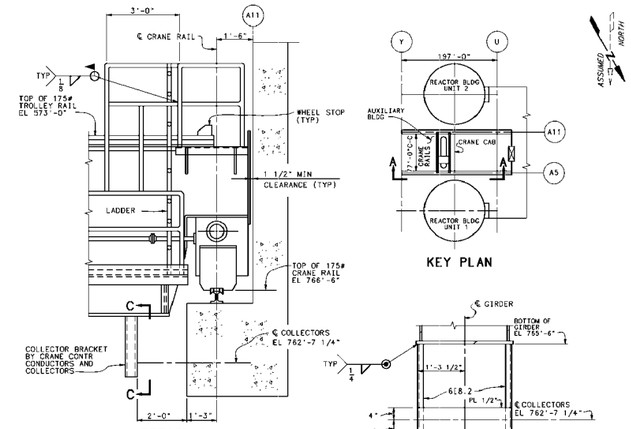

DETAIL A

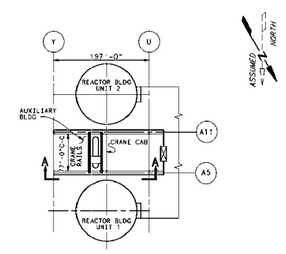

KEY PLAN

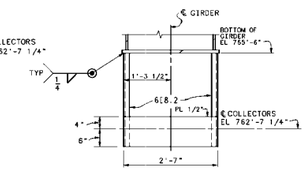

C-C

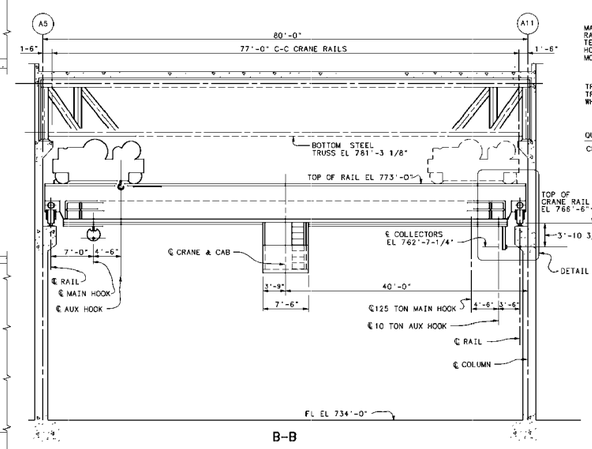

B-B

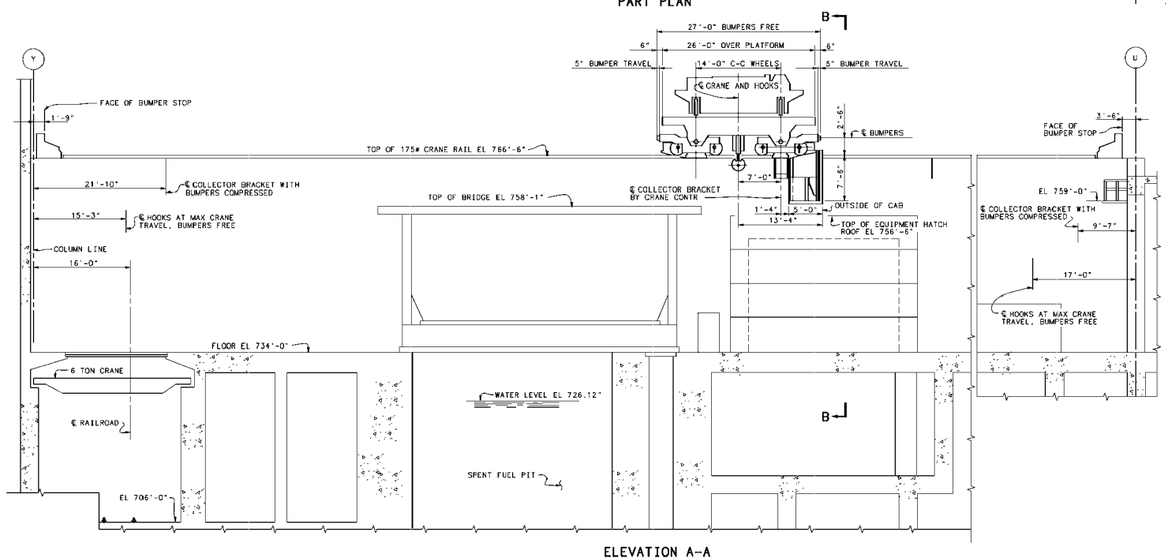

ELEVATION A-A

CAPACITIES AND SPEEDS

	MAIN HOIST	AUXILIARY HOIST
MAX LIFT	65'	118'
RATED CAPACITY AT HOOK	250,000#	20,000#
TESTING LOAD AT HOOK	312,500#	25,000#
HOISTING SPEED AT FULL LOAD	0.14 (MIN)/5.367 (MAX) FPM	0.85 (MIN)/34 (MAX) FPM
MOTOR (MIN SIZE)	50 HP	22.5 HP
BRIDGE		**TROLLEY**
TRAVEL SPEED	8.8 (MIN)/42.6 (MAX) FPM	4.8 (MIN)/25 (MAX) FPM
TRAVEL MOTORS (MIN SIZE)	5 HP, 1200 RPM, 2 REQD	3 HP, 1200 RPM
WHEEL TREAD DIA (MIN)	24"	24"

QUALITY ASSURANCE

CRANE IS CLASS 1(L)B SEISMIC EQUIPMENT

SEQUOYAH NUCLEAR PLANT
FINAL SAFETY
ANALYSIS REPORT

FIGURE 3.8.6-6
AB 125-TON CRANE

(REVISED BY AMENDMENT 18)

CAD MAINTAINED DRAWING

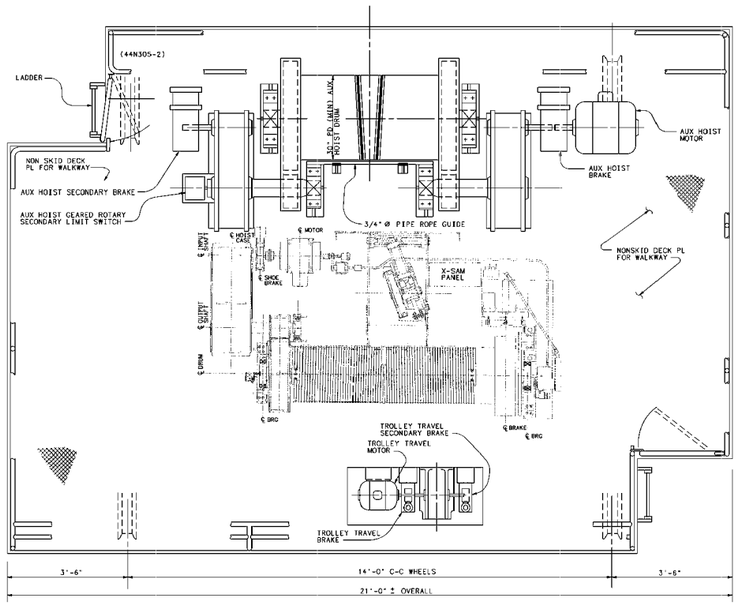

PLAN

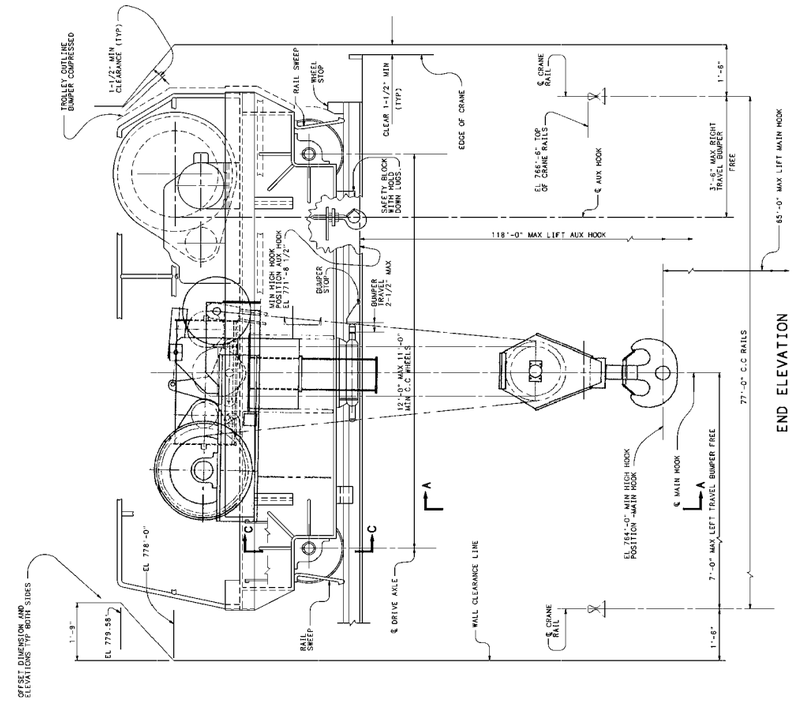

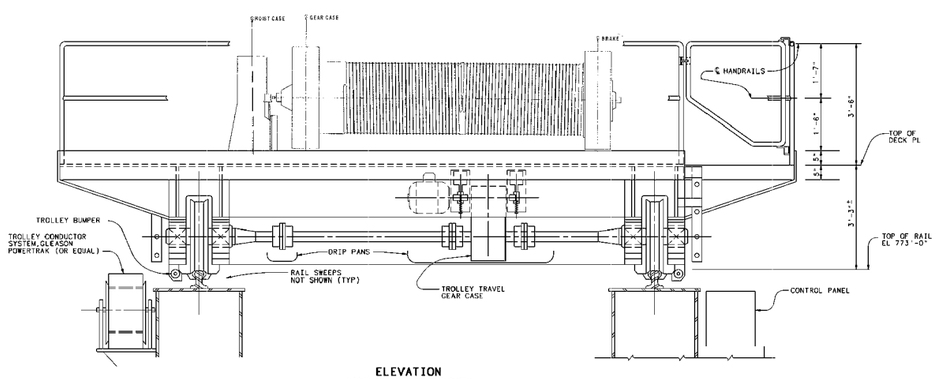

ELEVATION
HOOKS AND REEVING NOT SHOWN
MAIN HOIST DRUM SAFETY SUPPORTS/PILLOW BLOCK FRAMES NOT SHOWN

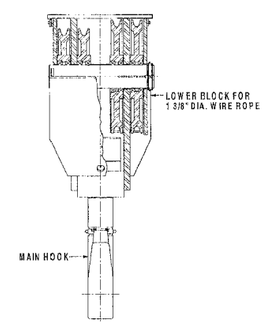

A-A

SEQUOYAH NUCLEAR PLANT
FINAL SAFETY
ANALYSIS REPORT

FIGURE 3.8.6-7
AB 125-TON CRANE TROLLEY

(REVISED BY AMENDMENT 18)

CAD MAINTAINED DRAWING

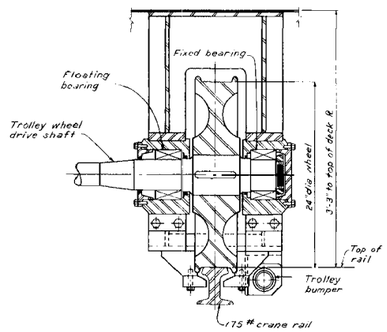

C-C

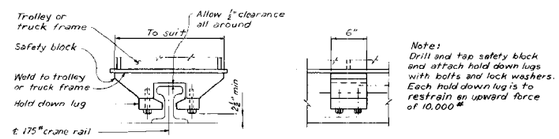

SAFETY BLOCK WITH HOLD DOWN LUGS
4 REQ'D FOR TROLLEY
LUGS FOR BRIDGE TRUCKS SIMILAR

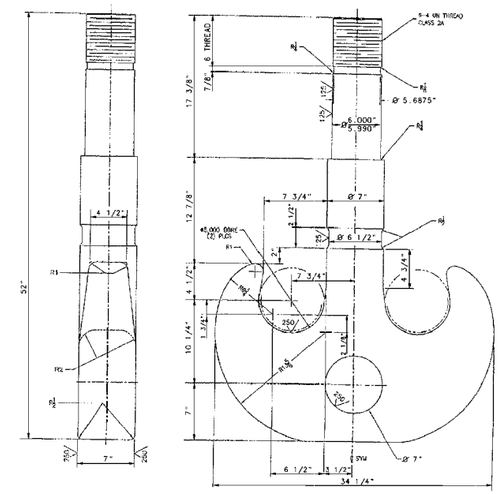

(UPGRADED MAIN HOOK)

SEQUOYAH NUCLEAR PLANT
FINAL SAFETY
ANALYSIS REPORT

FIGURE 3.8.6-8
AB 125-TON CRANE TROLLEY

(REVISED BY AMENDMENT 18)

CAD MAINTAINED DRAWING

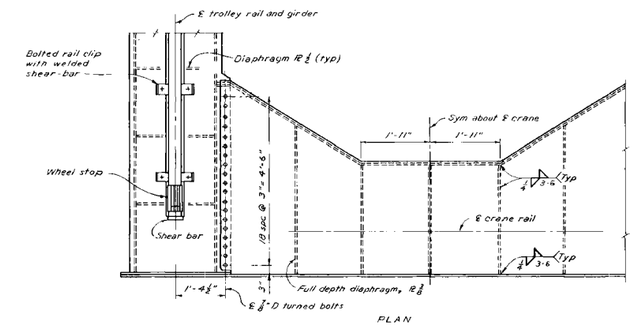

PLAN

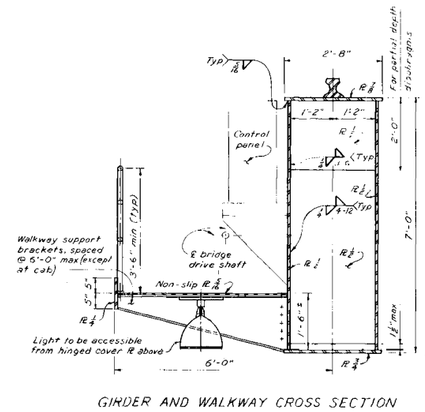

GIRDER AND WALKWAY CROSS SECTION

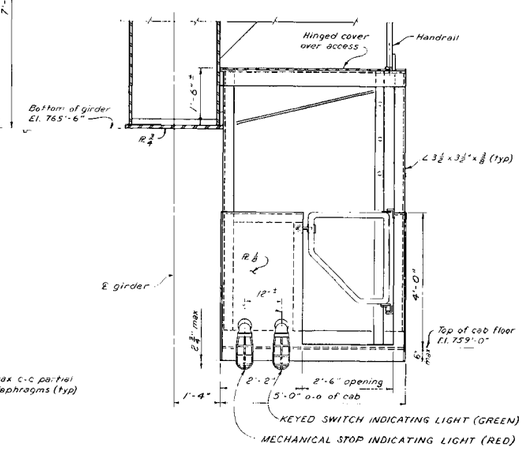

OPERATORS CAB

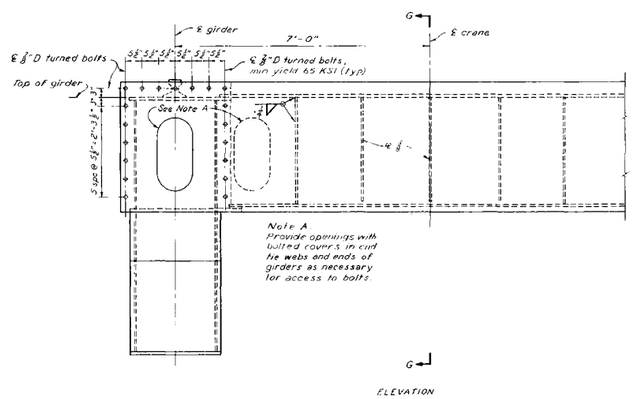

ELEVATION

GIRDER & END TIE CONNECTION
WALKWAY NOT SHOWN

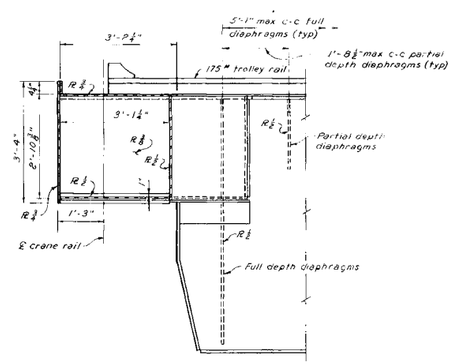

G-G

SEQUOYAH NUCLEAR PLANT
FINAL SAFETY
ANALYSIS REPORT

FIGURE 3.8.6-9
AB 125-TON CRANE BRIDGE

(REVISED BY AMENDMENT 13)

DRAWING SERVICES UNIT
PROCAD MAINTAINED DRAWING
THIS CONFIGURATION CONTROL DRAWING IS MAINTAINED BY THE SQN CAD UNIT AND IS PART OF THE TVA PROCADAM DATABASE.
COMPUTER GRAPHICS

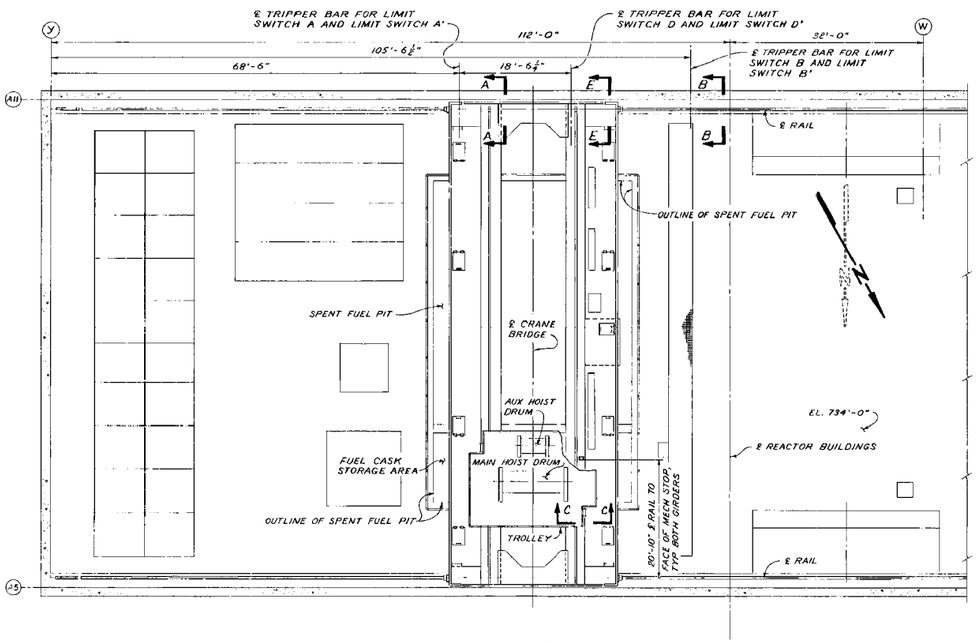

PLAN

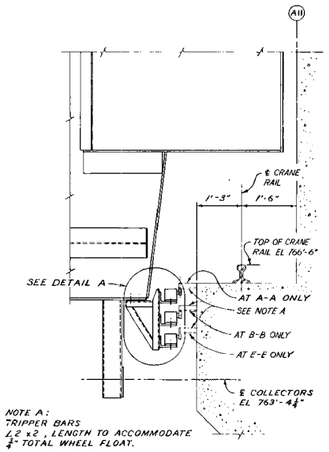

SECTION A-A, B-B & E-E

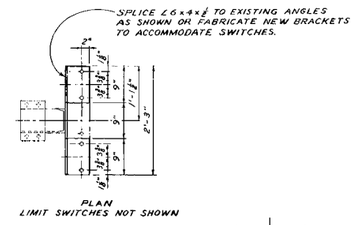

PLAN
LIMIT SWITCHES NOT SHOWN

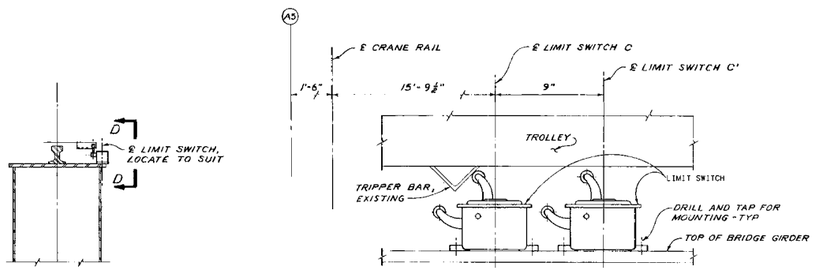

D-D

C-C

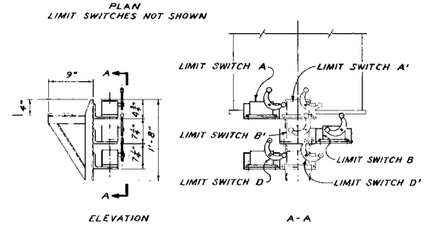

ELEVATION A-A

DETAIL A

NOTES:

GENERAL

THE PURPOSE OF THE LIMIT SWITCH ARRANGEMENT AND THE MECHANICAL STOPS IS TO PREVENT THE CRANE HOOKS PASSING OVER ANY PORTION OF THE SPENT FUEL PIT, EXCEPT THE SPENT FUEL CASK STORAGE AREA. IN ORDER TO RAISE THE SPENT FUEL POOL GATES, ALL LIMIT SWITCHES CAN BE BYPASSED UNDER ADMINISTRATIVE CONTROL. THIS CONTROL IS ACCOMPLISHED ONLY THROUGH THE USE OF A KEYED SWITCH.

OPERATION OF LIMIT SWITCHES

CONDITION I

BRIDGE IS LOCATED EAST OF LIMIT SWITCH A TRIP BAR OR WEST OF LIMIT SWITCH B TRIP BAR.
1. POWER FOR ALL MOTIONS IS AVAILABLE AND TROLLEY CAN TRANSVERSE ENTIRE BRIDGE.

CONDITION II

TROLLEY IS LOCATED NORTH OF LIMIT SWITCH C (THIS CONDITION IS NECESSARY FOR THE BRIDGE TO PASS OVER THE POOL UNDER NORMAL CONDITIONS).
1. POWER FOR ALL MOTIONS IS AVAILABLE AND THE BRIDGE CAN TRANSVERSE ITS ENTIRE RUN.

CONDITION III

BRIDGE LOCATED EAST OF LIMIT SWITCH A TRIP BAR OR WEST OF LIMIT SWITCH B TRIP BAR AND THE TROLLEY IS SOUTH OF LIMIT SWITCH C.
1. WHEN LIMIT SWITCH A OR A' IS TRIPPED, POWER FOR FURTHER WESTWARD TRAVEL OF THE BRIDGE IS INTERRUPTED.
2. WHEN LIMIT SWITCH B OR B' IS TRIPPED, POWER FOR FURTHER EASTWARD TRAVEL OF THE BRIDGE IS INTERRUPTED.
3. IF SWITCH A OR A' OR B OR B' HAVE BEEN TRIPPED, THE BRIDGE CAN BE TRAVELED IN THE REVERSE DIRECTION TO ESTABLISH CONDITION I.

CONDITION IV

BRIDGE LOCATED BETWEEN LIMIT SWITCH A TRIP BAR AND LIMIT SWITCH B TRIP BAR AND TROLLEY IS LOCATED NORTH OF LIMIT SWITCH C AND TRAVELING SOUTH.
1. WHEN LIMIT SWITCH C OR C' IS TRIPPED, POWER FOR FURTHER SOUTHWARD TRAVEL OF THE TROLLEY IS INTERRUPTED.
2. TROLLEY CAN BE MOVED IN THE REVERSE DIRECTION (NORTH) TO ESTABLISH CONDITION II.

CONDITION V

ADMINISTRATIVE CONTROL KEYED SWITCH IS ACTUATED (ALL LIMIT SWITCHES ARE BYPASSED AND POWER TO MECHANICAL STOP IS INTERRUPTED). THIS CONDITION IS NECESSARY ONLY FOR THE USE OF THE CRANE IN HANDLING OF THE SPENT FUEL POOL GATE ON THE WEST SIDE OF THE POOL.
1. POWER FOR ALL MOTIONS IS AVAILABLE. THE BRIDGE CAN TRANSVERSE ITS ENTIRE RUN AND THE TROLLEY CAN TRAVEL THE ENTIRE LENGTH OF THE BRIDGE.

SEQUOYAH NUCLEAR PLANT
FINAL SAFETY
ANALYSIS REPORT

FIGURE 3.8.6-10
AB 125-TON CRANES LIMIT SWITCH

(REVISED BY AMENDMENT 13)

DRAWING SERVICES UNIT
PROCAD MAINTAINED DRAWING
THIS CONFIGURATION CONTROL DRAWING IS MAINTAINED BY THE SQN CAD UNIT AND IS PART OF THE TVA PROCADAM DATABASE.
COMPUTER GRAPHICS

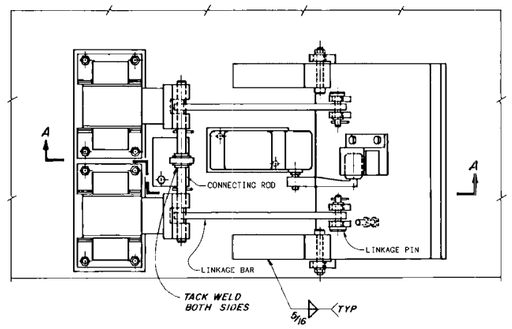

PLAN

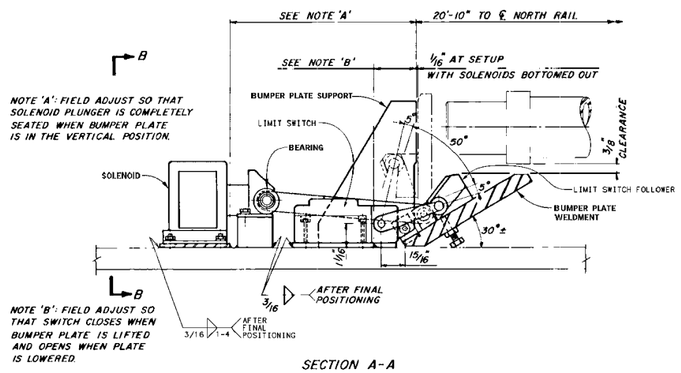

SECTION A-A

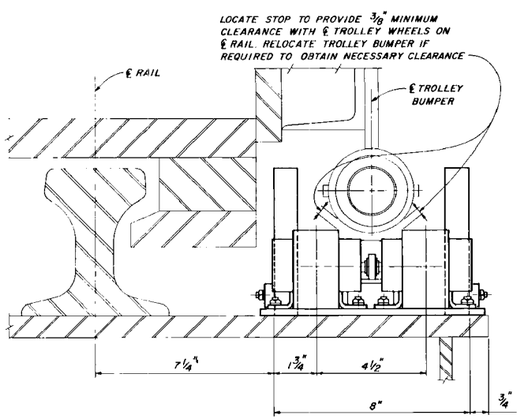

B-B

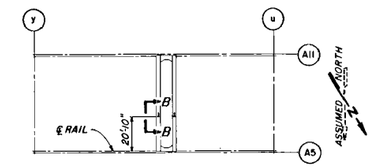

KEY PLAN
1" = 40'

SEQUOYAH NUCLEAR PLANT
FINAL SAFETY
ANALYSIS REPORT

FIGURE 3.8.6-11
AB 125 TON CRANE MECHANICAL STOP
(REVISED BY AMENDMENT 13)

DRAWING SERVICES UNIT
PROCAD MAINTAINED DRAWING
THIS CONFIGURATION CONTROL DRAWING IS MAINTAINED BY THE SQN CAD UNIT AND IS PART OF THE TVA PROCADAM DATABASE.
COMPUTER GRAPHICS

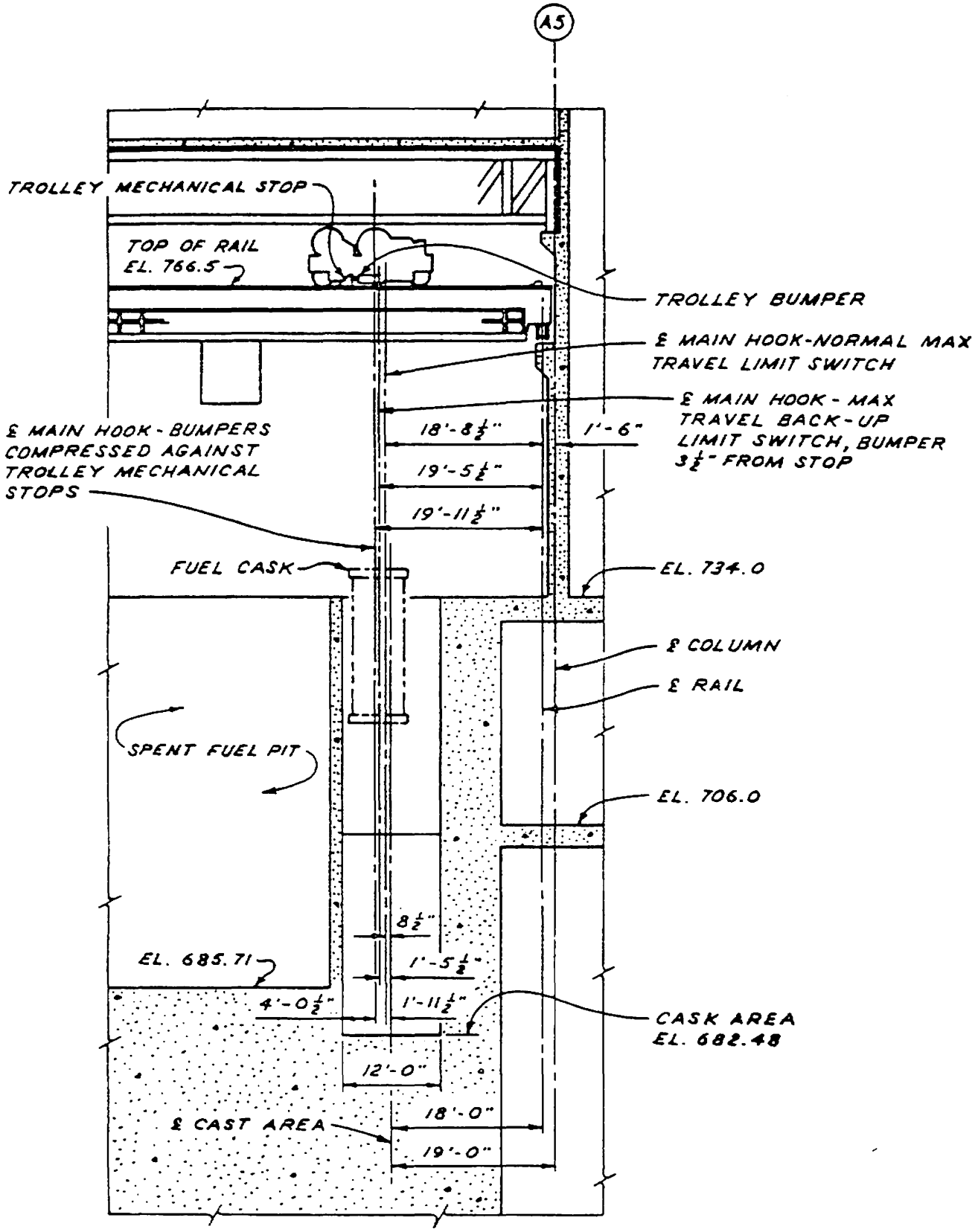

Figure 3.8.6-12 Sectional Elevation View Through The Spent Fuel Pit

APPENDIX 38A

SHELL TEMPERATURE TRANSIENTS

LIST OF FIGURES

Number	Title
3.8A-1	Shell Wall Temperature Versus Time After Loss of Coolant
3.8A-2	Typical Temperature Transient Lower Compartment Wall

SHELL TEMPERATURE TRANSIENTS

Figure 3.8A-1 presents average shell temperatures adjacent to the three compartments as a function of time after the design basis accident. The design basis accident is a double-end rupture of the reactor coolant pipe with the reactor decay heat released into the lower compartment as steam. Initially the steam is condensed in the ice compartment. After the ice melts the steam is condensed in the upper compartment by a water spray.

The lower compartment temperature rises to 240°F essentially instantaneously, then is reduced to 220°F very shortly after the blowdown is completed. The blowdown is completed before the shell adjacent to the lower compartment reaches 220°F, thus the smooth curve presented in Figure 3.8A-1.

The upper compartment temperature rises essentially instantaneously due to compression of the noncondensable gases into the upper compartment. The sharp rise at 7000 seconds simulates the disappearance of the ice from the ice compartment. The shell temperature will rise at a maximum of 0.11 degree per second during the rise from 140° to 170°F. The subsequent temperature decrease of the shell adjacent to the upper compartment is due to the reduction in decay heat.

The curve labeled shell adjacent to the ice compartment indicates the temperature of the shell adjacent to the ice compartment. The shell is separated from the ice compartment with a thick layer of insulation, hence, the rather slow response for the temperature of the shell adjacent to the ice compartment. After the ice is all melted, the temperature inside the ice compartment will be the same as the temperature in the lower compartment; however, the shell temperature adjacent to the ice compartment will be less than the temperature in the ice compartment because of the insulation. The temperature of the shell adjacent to the ice compartment will peak at less than 200°F.

The curves in Figure 3.8A-1 are an average shell temperature representative for the bulk of the shell. Some areas near boundaries between compartments and near the base will differ significantly from the bulk. The lower portion of the lower compartment shell will be insulated for the purpose of minimizing the transient effects. Figure 3.8A-2 is a plot of shell temperature versus distance above elevation 679 feet, 9-3/8 inches for various times after a Loss-of-Coolant Accident (LOCA). In establishing these curves it was assumed that top of the concrete slab is at elevation 679 feet, 9-3/8 inches, that the top of the insulation is at elevation 684 feet, 1-3/8 inch, and the top 8 inches of insulation is tapered from 2-inches thick to 1/4-inch thick.

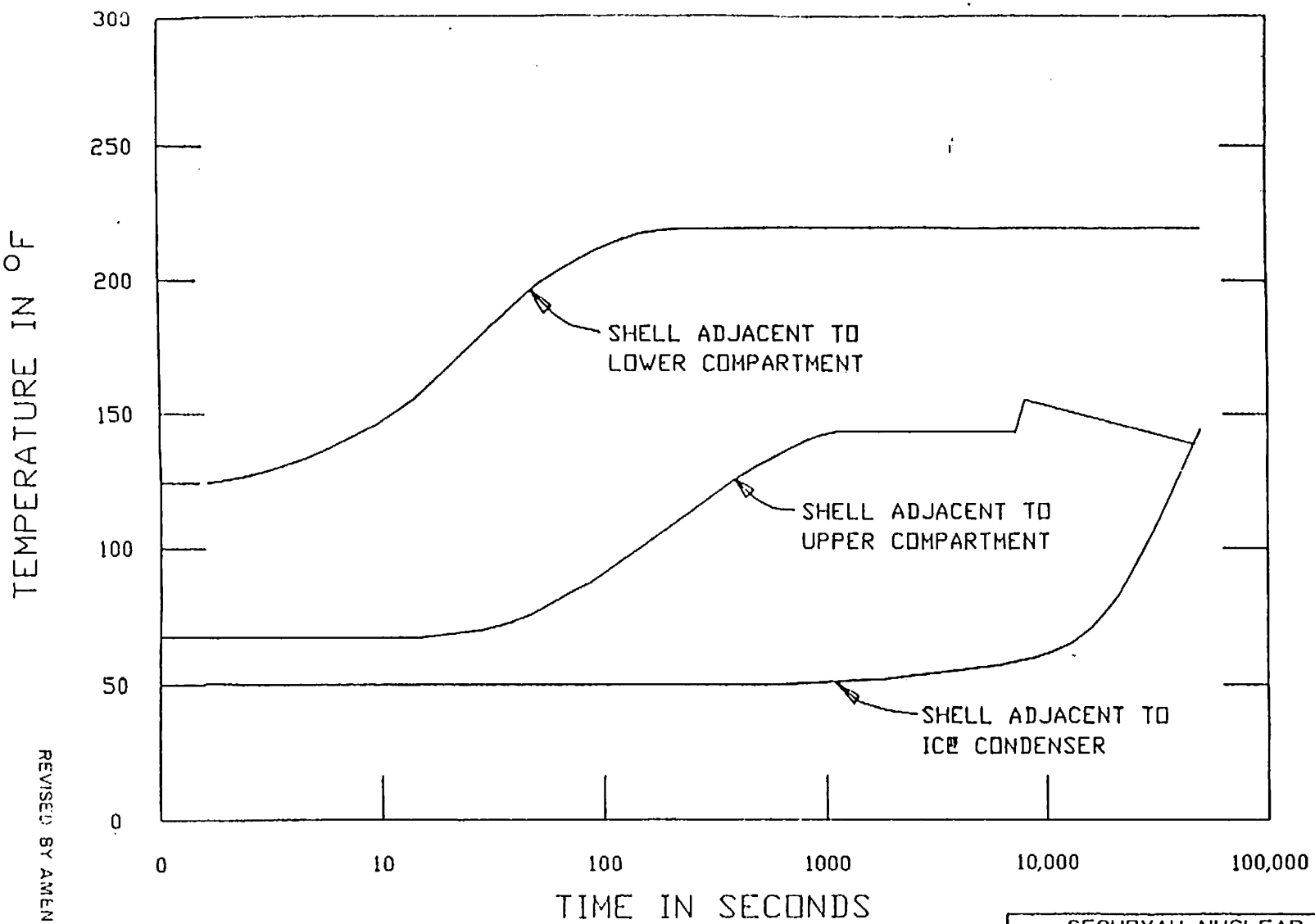

SQNP

SEQUOYAH NUCLEAR PLANT
FINAL SAFETY
ANALYSIS REPORT

SHELL WALL TEMPERATURE
VERSUS TIME
AFTER LOSS OF COOLANT

FIGURE 3.8A-1

REVISED BY AMENDMENT 6.

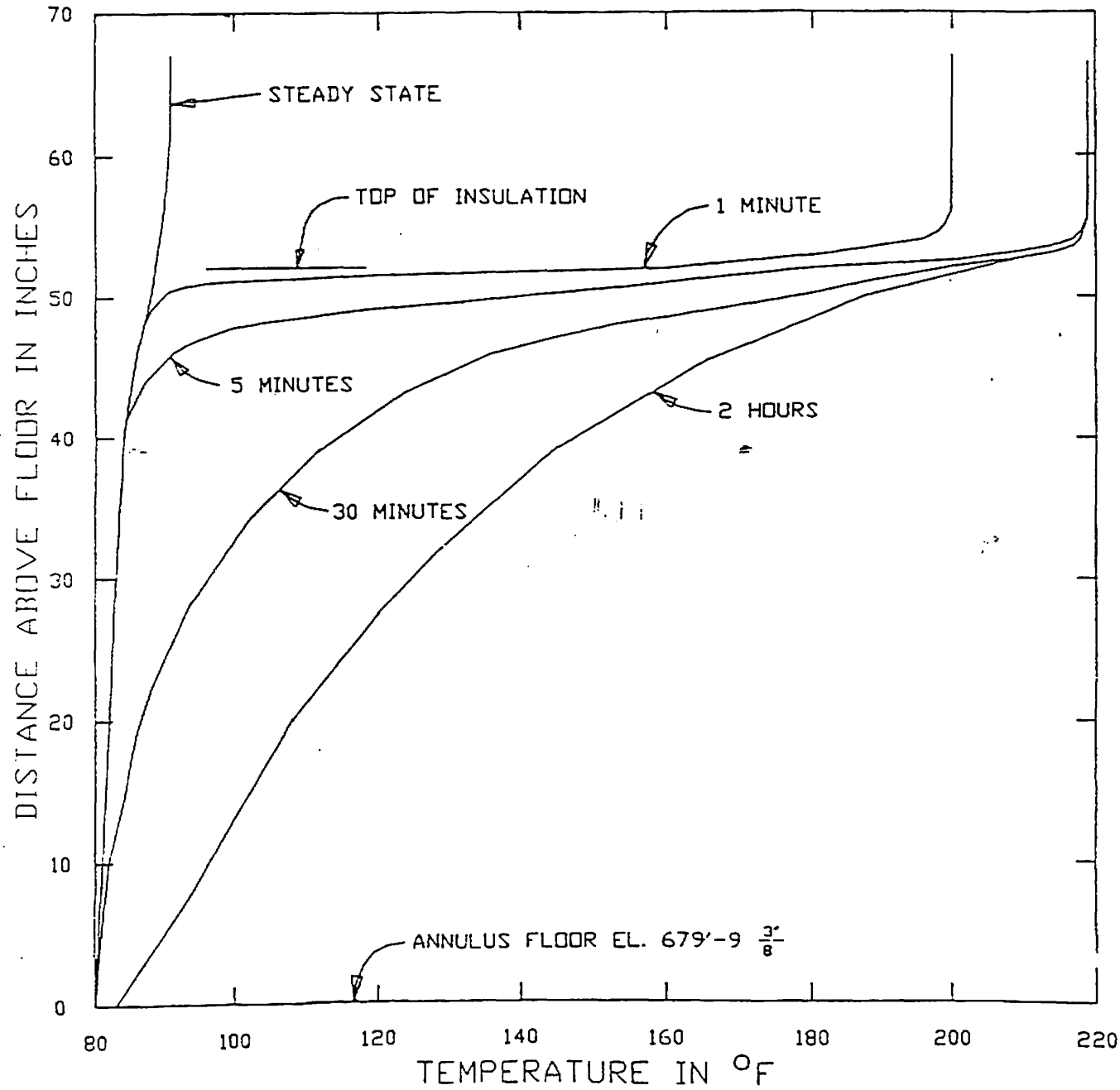

SEQUOYAH NUCLEAR PLANT FINAL SAFETY ANALYSIS REPORT
TYPICAL TEMPERATURE TRANSIENT LOWER COMPARTMENT WALL FIGURE 3.8A-2

REVISED BY AMENDMENT 6.

APPENDIX 3.8B

CONTAINMENT VESSEL PENETRATIONS

CONTAINMENT VESSEL PENETRATIONS

The penetrations are summarized under three categories: penetrations requiring bellows (hot fluid carrying and certain engineering safeguard system lines), penetrations that do not require bellows (cold fluid carrying lines), and nonprocess penetrations (heating, vent, electrical, and spare penetrations).

Axial loads are assumed to act along the longitudinal axis of the penetration while radial loads are assumed to act in a plane that is transverse to the penetration longitudinal axis. A torsional moment is assumed to act about the penetration longitudinal axis while the bending movement may be assumed to bend the penetration longitudinal axis in any direction that would produce the greatest loading effects on the containment liner.

Seismic loads from piping systems are included in the forces considered for the penetrations that do not require bellows. Seismic loads for penetrations requiring bellows and nonprocess penetrations are calculated from the dead loads supplied and the vessel's response.

Each nozzle and adjacent vessel shell was analyzed for the specified loads acting simultaneously with other nozzles concurrent with the design internal pressure. The design internal pressure used in the analysis (10.8 psig) is based on maximum containment pressure of 12 psig reduced by 10 percent as allowed by the ASME Code.

The critical stress location is at the junction of the nozzle sleeve and the shell. Stresses in the nozzle sleeve at this point due to the applied loads were found by assuming the sleeve to be a rigid pipe subject to only primary axial, bending, and shear stresses.

Pressure produces a complex state of stress in both the shell and nozzle at their intersection. Paragraph N-451 (b) of the ASME Code, Section III, was used as a guide for the analysis of these stresses. This paragraph assumes that in the vicinity of a nozzle reinforced in accordance with ASME rules, maximum membrane pressure stress will not exceed 1.0 Sm and the maximum surface stress will not exceed 1.5 Sm. For the purpose of this analysis it was assumed that these stresses exist within the limits of reinforcement for both the nozzle and the shell.

Stresses and stress intensities were found, summarized, and compared to allowables for applied loads, pressure, and a combination of both, in accordance with Table 3.8.2-1.

Nozzle Stresses Due to Applied Loads

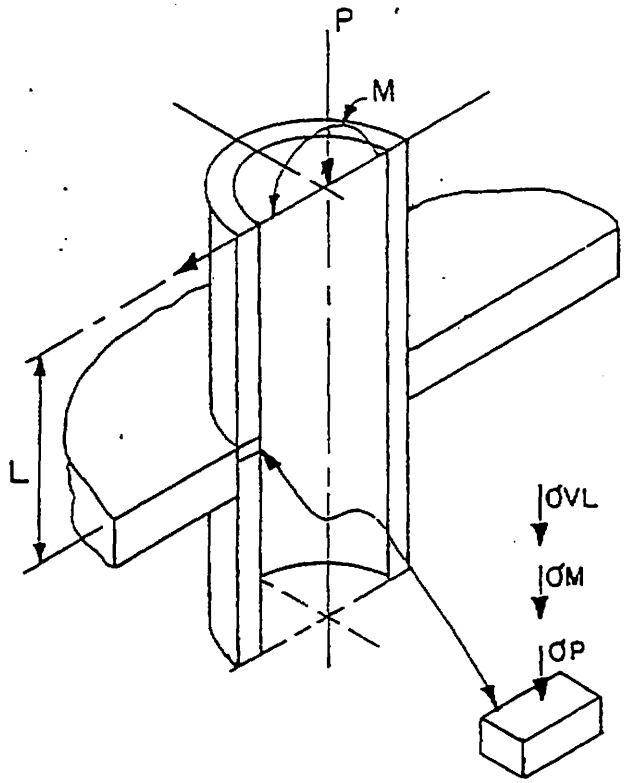

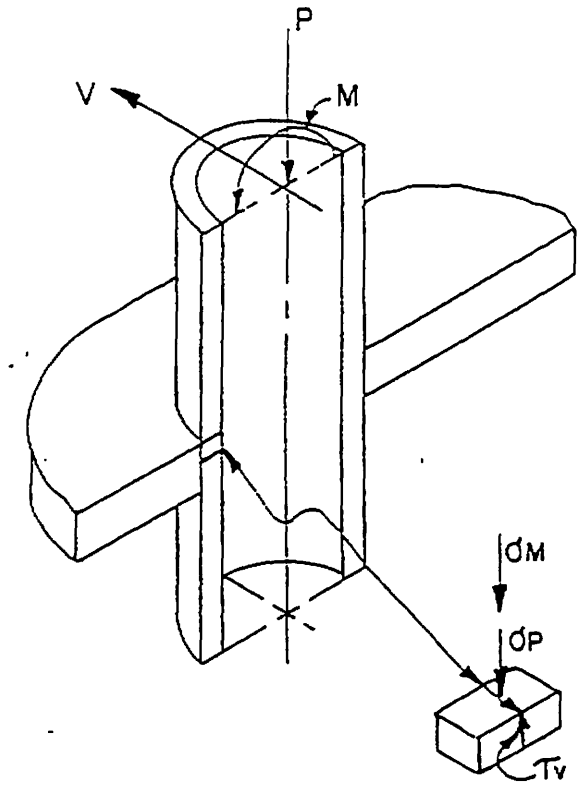

CASE 1

Maximum Stress Intensity =

$$S_1 = \sigma_p + \sigma_m \sigma_{VL}$$

CASE 2

Maximum Stress Intensity =

$$S_2 = \sqrt{(\sigma_p + \sigma_m)^2 + 4\tau_v^2}$$

Where: $\sigma_p = P / A,\ \sigma_m = M / Z,\ \sigma_{VL} = VL / Z$

and: P = Specified Radial Load
V = Specified Lateral Load
M = Specified Moment
L = Maximum Specified Nozzle Projection
A = Metal Area of Nozzle Cross Section
Z = Section Modulas of Nozzle Cross Section
I = Moment of Inertia of Nozzle Cross Section
r_m = Mean Radius of Nozzle
t = Nozzle Wall Thickness

Nozzle and Shell Stresses Due to Pressure

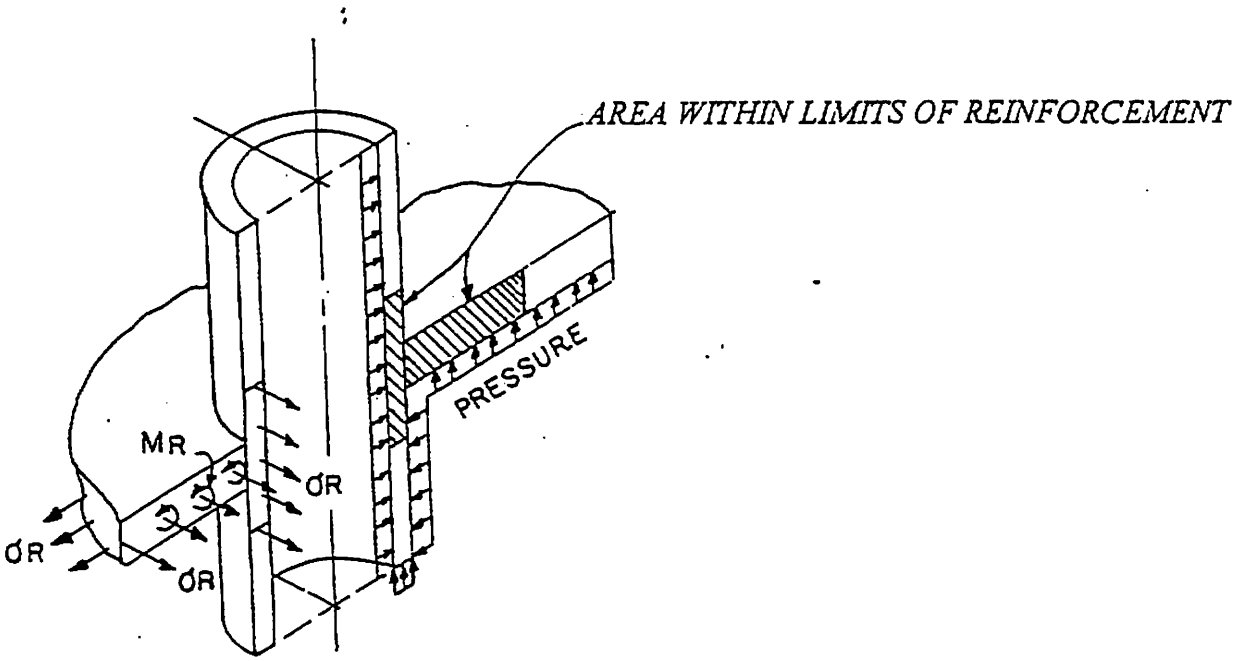

$\sigma_R = \dfrac{\text{Area Replacement Required}}{\text{Area Replacement Available}} \times \text{Sm of Shell}$

$P = T\,\sigma_R$

Membrane Stresses Within Limits of Reinforcement

Shell: $\sigma_O = \sigma_X + \sigma_R$

Nozzle: $\sigma_O = \sigma_R$

$\sigma_X = \sigma$ (Meridional Stresses are assumed externally balanced)

Surface Stresses Within Limits of Reinforcement

Shell: $\sigma_O = \sigma_X = 1.5\,\sigma_R$ (Bending due to M_R plus membrane)

Nozzle: Surface stress same as membrane

Shell Stresses Due to Applied Loads

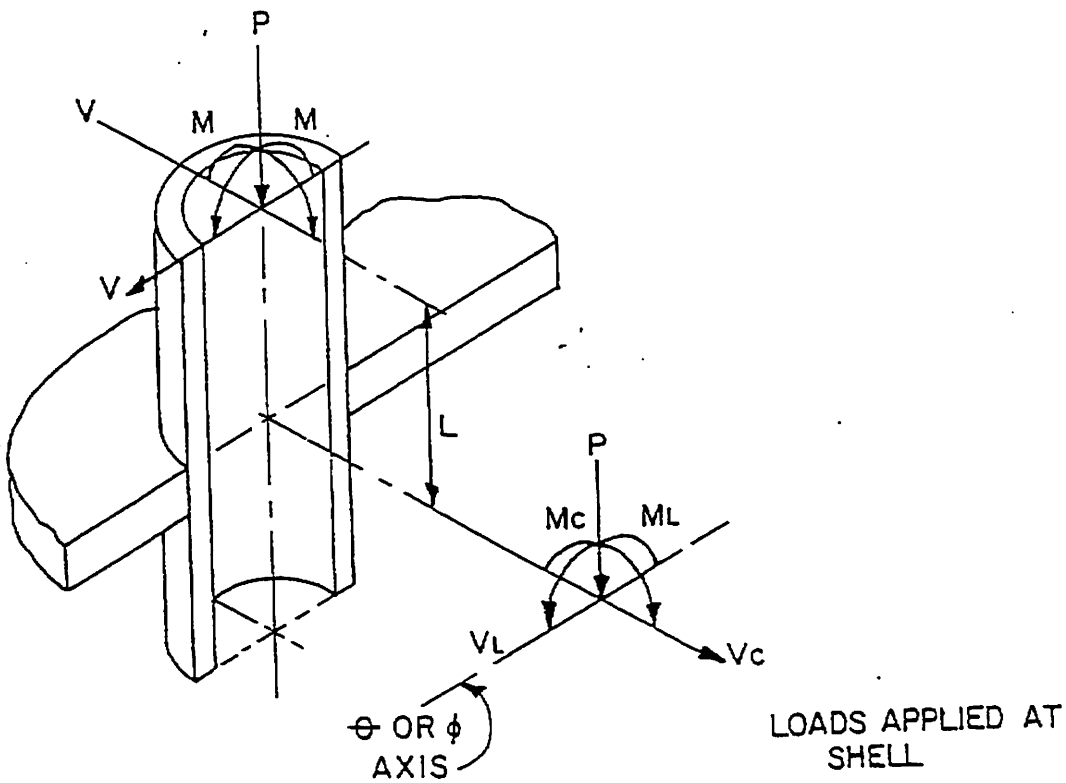

$V_C = V_L = V$

$M_C = M_L = M + VL$

Loads were applied as shown above and analyzed by computer program. Note that maximum resulting stresses on computer print-out sheets are negative (compressive). This is due to assuming the radial load acting inward towards vessel. If the radial load had been assumed to act outward the maximum stresses would have the same value but would be positive (tensile). Since pressure stresses are tensile, the maximum stresses due to applied loads will be considered tensile and added directly to pressure stresses to derive combined stress intensities.

Nozzle Stress Due to Pressure and Applied Loads

CASE 1

$$Maximum\ Stress\ Intensity = \sigma_P + \sigma_m\ \sigma_{VL} + \sigma_R$$ 13

Stress FNT = 2MAX

= 2DIAM/2

= DIAM

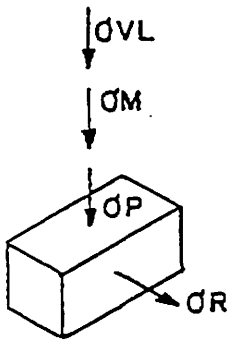

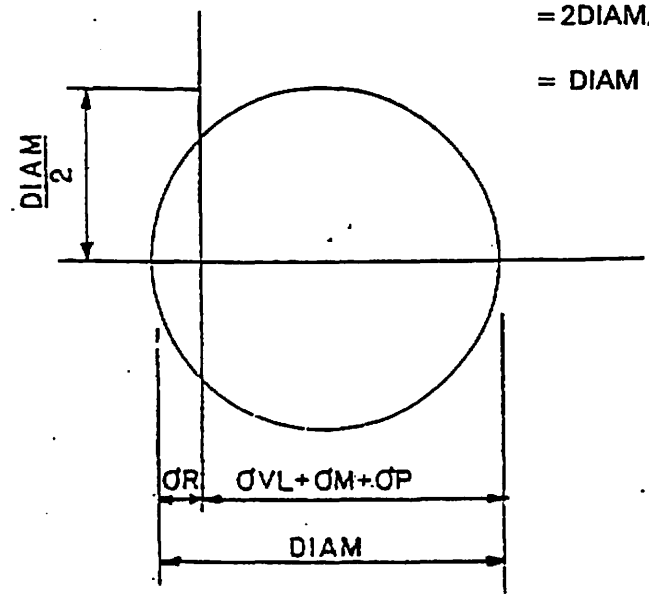

CASE 2

$$Maximum\ Stress\ Intensity = \sqrt{(\sigma_P + \sigma_m + \sigma_R)^2 + 4\tau_v^2}$$ 13

$$DIAM = \sqrt{(\sigma_R + \sigma_{VL} + \sigma_M)^2 + 4\tau_V^2}$$ 13

DSTRESS FNT = DIAM

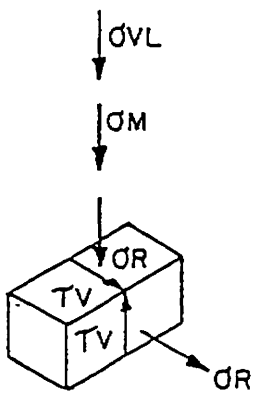

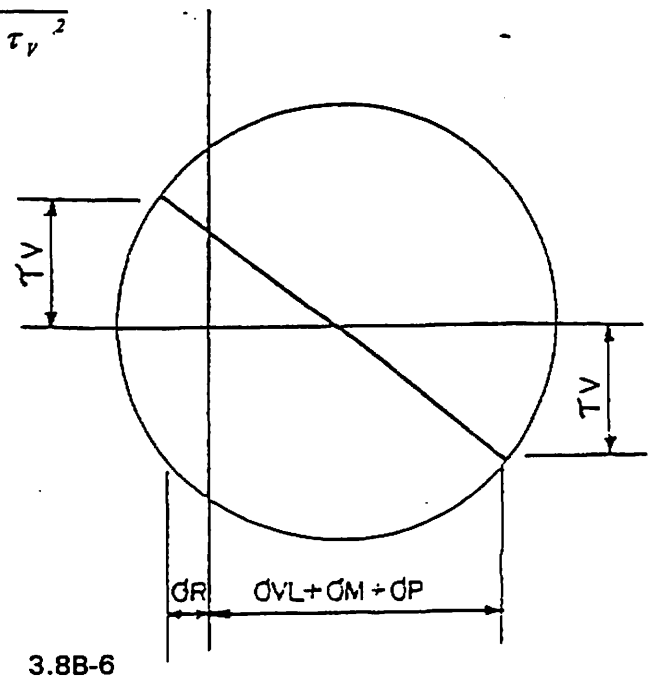

APPENDIX 3.8C

CONTAINMENT ANCHORAGE

LIST OF FIGURES

Number	List
3.8C-1	Static and Seismic Loads
3.8C-2	NASPT, Dead and Seismic Meridional Loads
3.8C-3	Tensile Shell Load Due to NASPT
3.8C-4	Compressive Shell Loads Due to NASPT

Containment Anchorage

The anchorage for the containment vessel is subject to static, seismic, and nonaxisymmetric-pressure transient loads as shown for the specified loading combinations of Table 3.8.2-2.

Static and Seismic Loads

The anchorage for static and seismic loads was designed in accordance with ASME requirements for pressure parts and AISC requirements for nonpressure parts. Anchor bolts were preloaded to give the shell a circumferential load of 5.4 kips per inch. This preload was anchored to 3000-pound, 90-day mass concrete below elevation 676 feet, 0 inch and exceeded the applied over-pressure tensile load. Generally the analysis assumes no aid from the fact that the anchorage is totally encased in concrete.

The individual loading conditions are shown in Figure 3.8C-1.

The induced twisting moment was analyzed by assuming the anchorage divided into an upper ring section and a lower ring section as shown in Figures 3.8C-3 and 3.8C-4. Each ring was assumed loaded with a horizontal couple reaction resulting from the twisting moment.

For static and seismic conditions stresses for the anchor bolt, bridge plate and anchor plate were determined only for the bolt preload as they are unaffected by the applied loads. Stresses in the upper and lower ring sections were determined for each significant loading condition.

Pressure Transient Loads

Meridional loads on the shell at the base are shown in Figure 3.8C-2. These loads include the nonaxisymmetric-pressure transient loads. Tensile shell loads which exceed the preload are resisted by plate "A". This force is resisted by the 3-foot, 7-7/8-inch base slab above the rough concrete in bearing. Only four-5/16 inch on each side of the centerline of shell plate was assumed to resist these tensile loads. This symmetrical loading of plate "A" will not cause any additional twisting moment on the anchorage. See Figure 3.8C-3 for this loading condition.

Compressive shell loads are resisted by 3000-pound, 90-day, rough, mass concrete. This induces twisting moment, but this is less than the twisting moment for tensile shell loads. See Figure 3.8C-4 for this loading condition. Note that for an applied compressive load it was assumed that the concrete will not compress sufficiently to significantly reduce the bolt preload. For all loading combinations, the computed stresses were less than allowable stress intensities.

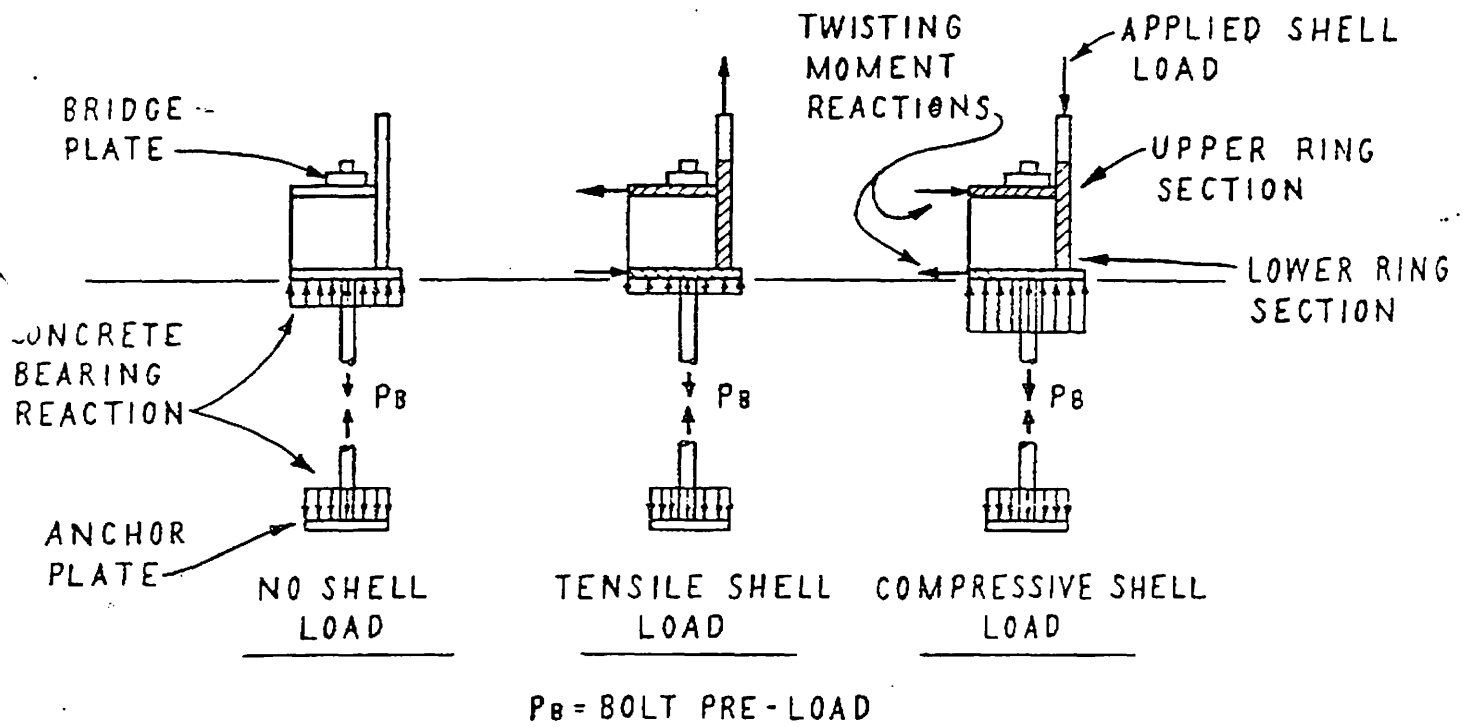

SEQUOYAH NUCLEAR PLANT FINAL SAFETY ANALYSIS REPORT
STATIC AND SEISMIC LOADS Figure 3.8C-1

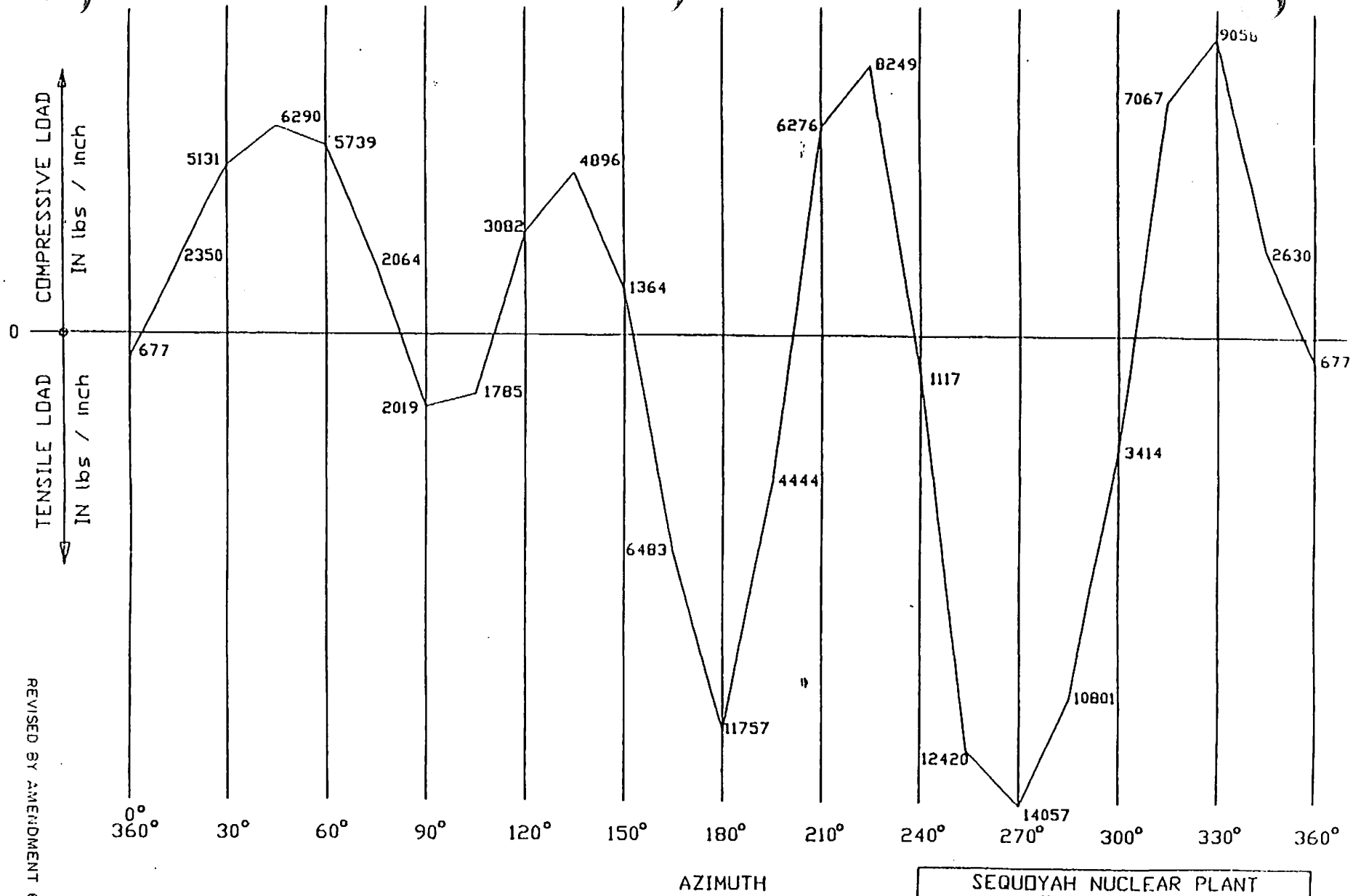

SEQUOYAH NUCLEAR PLANT
FINAL SAFETY
ANALYSIS REPORT

NASPT
DEAD AND SEISMIC
MERIDIONAL LOADS

FIGURE 3.8C-2

REVISED BY AMENDMENT 6.

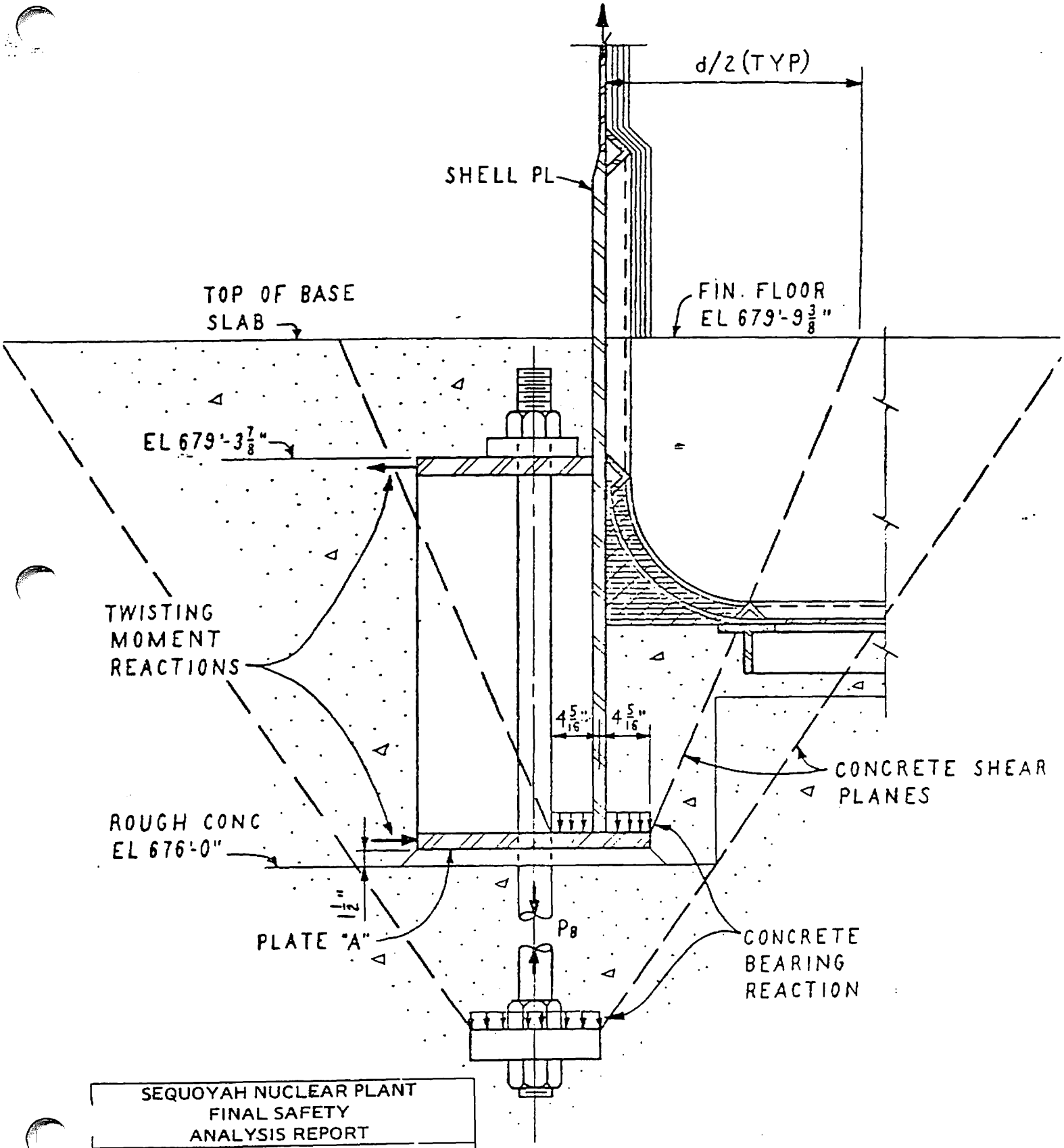

SEQUOYAH NUCLEAR PLANT
FINAL SAFETY
ANALYSIS REPORT

TENSILE SHELL LOAD
DUE TO NASPT

Figure 3.8C-3

REVISED BY AMENDMENT 6.

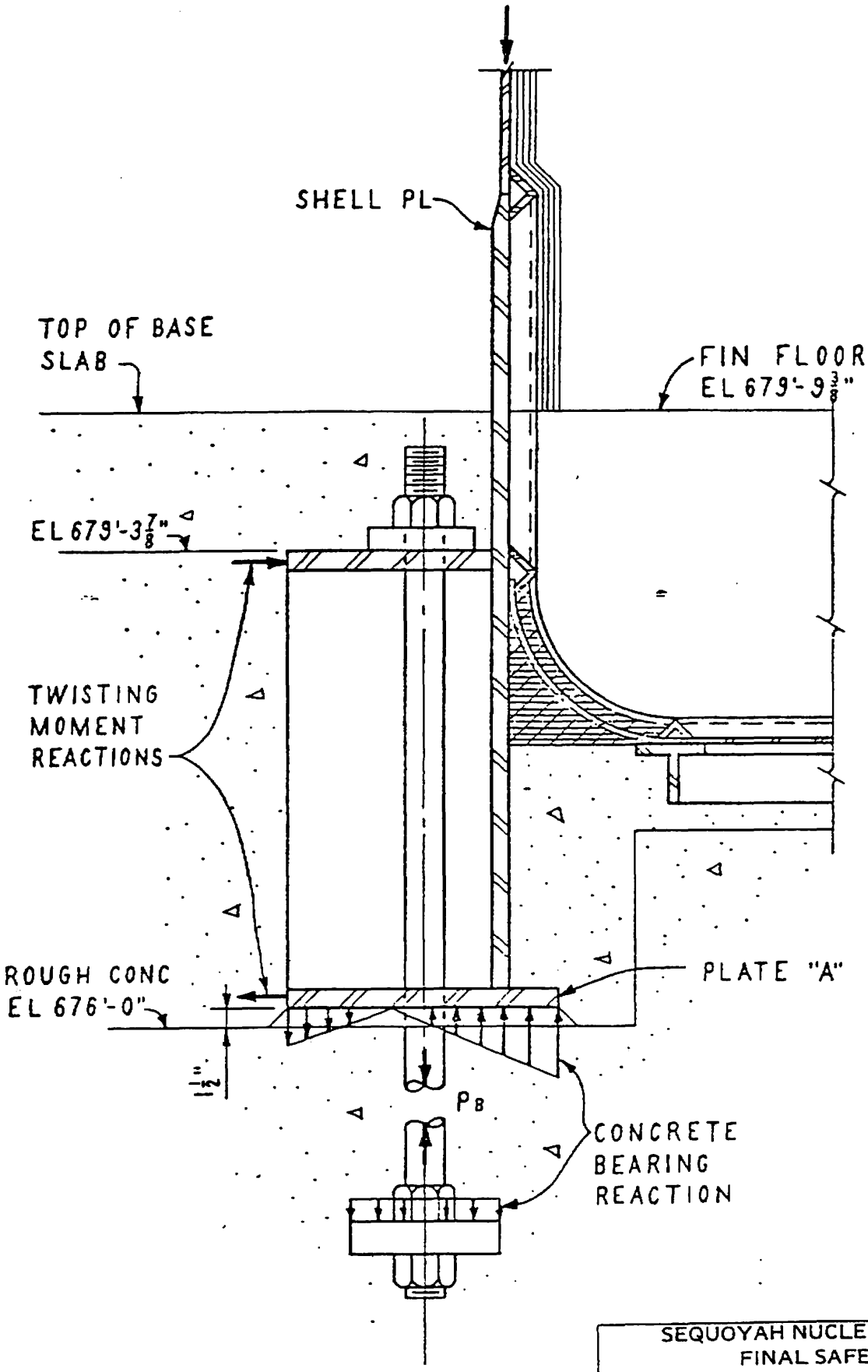

SEQUOYAH NUCLEAR PLANT
FINAL SAFETY
ANALYSIS REPORT

COMPRESSIVE SHELL
LOADS DUE TO NASPT

Figure 3.8C-4

REVISED BY AMENDMENT 6.

APPENDIX 3.8D

COMPUTER PROGRAMS USED IN STRUCTURAL ANALYSIS

LIST OF TABLES

Number	List
3.8D-1	Biaxial Bending - USD
3.8D-2	Concrete Stress Analysis
3.8D-3	Thermcyl
3.8D-4	Torsional Dynanal
3.8D-5	Dynanal
3.8D-6	Rocking Dynanal
3.8D-7	Comparison of Hand Calculations with BAP222 for a Biaxial Bending of an Infinitely Stiff Base Plate with Anchor Bolts.
3.8D-8	Penetration Nozzle Analysis - PNA 100 Stresses (LB/IN^2) (PEN X-57)

LIST OF FIGURES

Number	List
3.8D-1	Comparison of STRUDL with RESPONSE FOR EARTHQUAKE AVERAGING
3.8D-2	Comparison of STRUDL with SPECTRAL RESPONSE

Computer programs used for structural analysis and design of Category I Structures have been validated by one of the following criteria or procedures:

a. The following computer programs are recognized programs in the public domain:

Program Name	Start Date	Hardware	Source
AMG032	1965	IBM	R&H
AMG033	1965	IBM	R&H
AMG034	1965	IBM	R&H
ANSYS	1972	CDC	CDC
ASHSD	1969	IBM	UCB
GENDEK 3	1969	IBM	UCB
GENSHL 2	1969	IBM	FIRL
GENSHL 5	1968	IBM	FIRL
GTSTRUDL	1979	CDC	CDC
NASTRAN	1974	CDC	CDC
SAP IV	1973	CDC	UCB
SDRC FRAME PACKAGE - SAGS/DAGS	1977	CDC	CDC
STARDYNE	1977	CDC	CDC
STRESS	1970	GE	GE
STRUDL	1972	IBM	ICES
STRUPAK	1971	CDC	CDC
SUPERB	1977	CDC	CDC
STRUDL	1975	IBM	McAUTO
WERCO	1979	CDC	AAA

Currently, all programs on IBM compatible hardware are run under the MVS-SP3 operating system on either an IBM 308ID or an AMDAHL 470 Y8. All programs on CDC hardware run under the NOS version 1.4 operating system on either Model 175 or 176 hardware.

The following abbreviations are used for program sources:

AAA - AAA Technology, Houston, TX
CDC - Control Data Corporation, Minneapolis, MN
FIRL - Franklin Institute Research Labs, Philadelphia, PA
GE - General Electric Co., Rockville, MD
ICES - Integrated Civil Engineering System, Worchester, MA
R&H - Rohm & Haas Company, Huntsville, AL
UCB - University of California, Berkeley, CA

b. The following programs have been validated by comparison with a program in the public domain:

RESPONSE FOR EARTHQUAKE AVERAGING SPECTRAL RESPONSE
Summary comparisons of results for these computer programs are provided in Figures 3.8D-1 and 3.8D-2.

c. The following programs have been validated by comparison with hand calculations:

BAP222
BIAXIAL BENDING - USD
CONCRETE STRESS ANALYSIS

THERMCYL
TORSIONAL DYNANAL
PNA100*

The following programs have been validated by comparison with analytical results published in the technical literature:

DYNANAL
ROCKING DYNANAL

Summary comparisons of results for these computer programs are provided in Tables 3.8D-1 through 3.8D-8.

* This information is provided for historical purposes. Computer program PNA100 is not currently used. Instead, hand calculations are performed on as needed basis.

Table 3.8D-1

BIAXIAL BENDING - USD

Moment Capacity (FT-KIPS)			
M_x		M_y	
Hand Calculations	Program	Hand Calculations	Program
0	0	409	408
601	603	287	285
850	850	164	165
911	909	77	76
933	932	0	0

Comparison of hand calculations with BIAXIAL BENDING - USD for the moment capacities of a reinforced concrete section for a given direct load.

Table 3.8D-2

CONCRETE STRESS ANALYSIS

Concrete Compression Stress (psi)	
Hand Calculations	Program
436	436

Row No.	Steel Tensils Stress (psi)	
	Hand Calculations	Program
1	-3833	-3830
2	-2238	-2234
3	-644	-639
4	950	957
5	2417	2419
6	3884	3881
7	5478	5477
8	6275	6275
9	11053	11061

Comparisons of hand calculations with CONCRETE STRESS ANALYSIS for reinforced concrete beam with 9 rows of steel, subject to combined load of moment and axial force.

Table 3.8D-3

THERMCYL

Dead Load (psi)	Maximum Concrete Compression Stress (psi)		Steel Tensile Stress (psi)	
	Hand Calculations	Program	Hand Calculations	Program
0	770.8	770.9	12,948	12,950
10	848.8	848.3	12,285	12,290
100	1313	1316	8,336	8,311
1000	2795	2793	-5,010	-4,990

Comparison of hand calculations with THERMCYL results for stresses in reinforced concrete thin-walled cylinder with non-linear temperature distribution across wall thickness and varying dead load axial stress.

Table 3.8D-4

TORSIONAL DYNANAL

Mode No.	Pure Torsion Modal Frequencies	
	Frequency (RAD./SEC.)	
	Hand Calculations	Program
1	2810	2814
2	8430	8430

Comparison of hand calculations with TORSIONAL DYNANAL results for torsional modes of vibration of a thin-walled steel half-tube.

Table 3.8D-5

DYNANAL

Mode No.	Modal Periods Including Effects of Flexural and Sheer Deformations	
	Period (SEC)	
	Published Results	Program
1	1.48	1.50
2	.425	.430
3	.216	.222
4	.149	.157
5	.114	.124

Comparison of DYNANAL with analytical procedure presented in Engineering Vibrations, L. S. Jacobsen and R. S. Ayre, McGraw-Hill, 1958, Chapter 10, Modal Analysis of 200 Ft. shear-wall building including effects of flexural and shear deformations.

Table 3.8D-6

ROCKING DYNANAL

Mode No.	Modal Frequencies of Lumped-Mass Shear Beam Including Effects of Base Rocking	
	Frequency (RAD.SEC.)	
	Published Results	Program
1	5.155	5.339
2	20.52	19.226

Comparison of ROCKING DYNANAL with Analytical Procedure presented in "Earthquake Stresses in Shear Buildings," M. G. Salvadori, ASCE Transactions, 1953, Paper No. 2666. Modal analysis of lumped-mass shear beam including effects of base rocking.

TABLE 3.8D-7

Comparison Of Hand Calculations With BAP222 For Biaxial Bending Of An Infinitely Stiff Base Plate With Anchor Bolts

	Hand Calculation	Program
Concrete Pressure		
Corner 1	0.33 ksi	0.33 ksi
Corner 2	0.58 ksi	0.63 ksi
Neutral Axis Location		
Side 1	3.67'	3.36'
Side 2	6.41'	6.41'
Bolt Loads		
Bolt 1	+1.7k	+1.7k
Bolt 2	-5.3k	-5.4k
Bolt 3	+3.2k	+3.4k
Bolt 4	-3.7k	-3.6k

TABLE 3.8D-8

PENETRATION NOZZLE ANALYSIS - PNA 100
STRESSES (LB/IN^2) (PEN X-57)

NEXT TO SHELL

Case	Calc. Mode	A	B	C	D
1	Program	11,039	16,588	11,224	16,495
	Hand	11,036	16,584	11,221	16,491
4	Program	13,074	19,192	12,417	17,974
	Hand	13,070	19,187	12,412	17,968

AWAY FROM SHELL

Case	Calc. Mode	A	B	C	D
1	Program	10,358	10,095	10,571	10,330
	Hand	10,354	10,090	10,567	10,327
4	Program	12,944	12,621	12,196	11,915
	Hand	12,939	12,616	12,190	11,908

Best Available Historical Image

RESPONSE FOR EARTHQUAKE AVERAGING

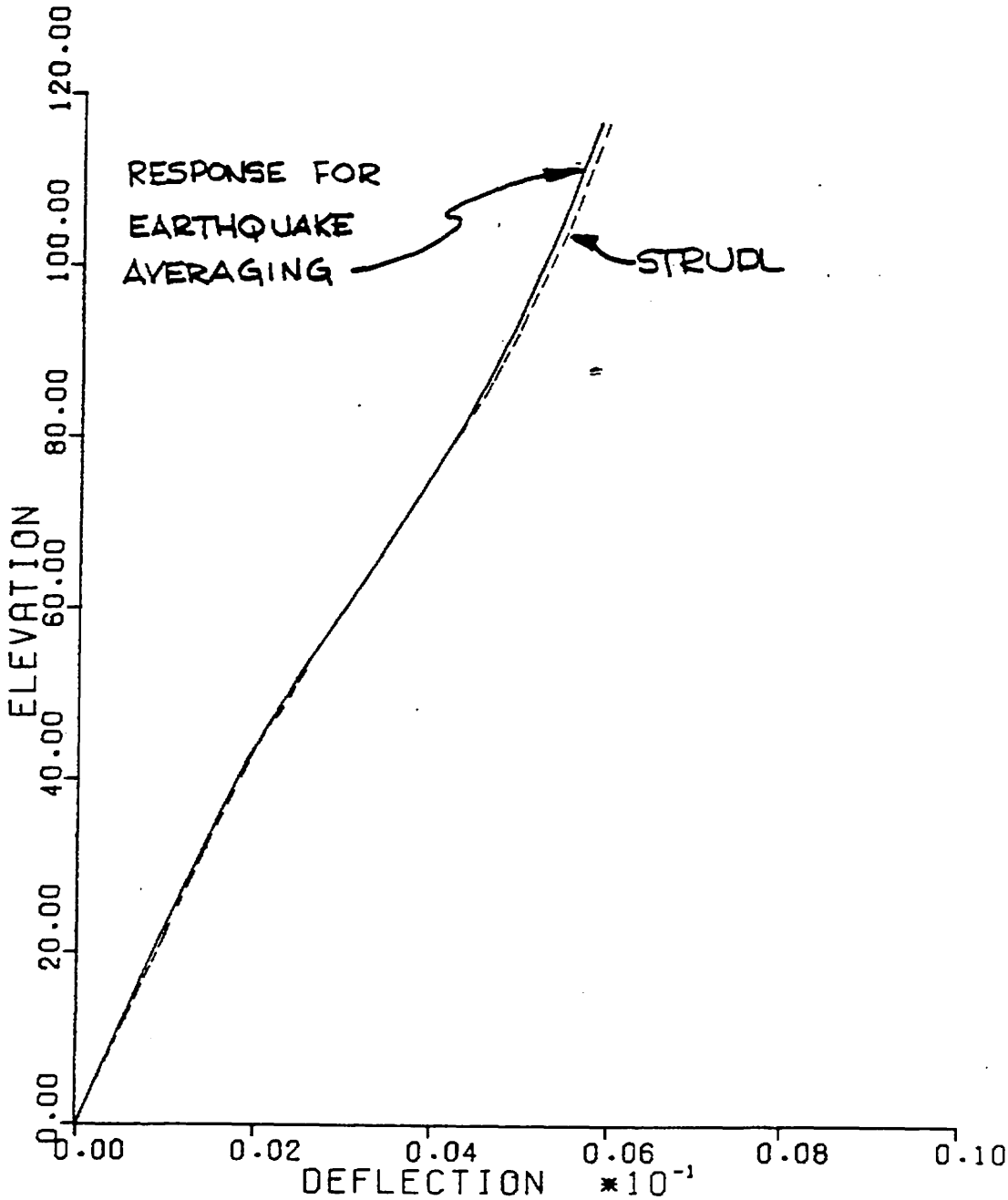

Comparison of STRUDL with RESPONSE FOR EARTHQUAKE AVERAGING for a normal-mode time-history analysis of a lumped-mass structural model of a nuclear power plant structure subjected to the 1940 El Centro earthquake N-S ground motion.

Figure 3.8D-1

Best Available Historical Image

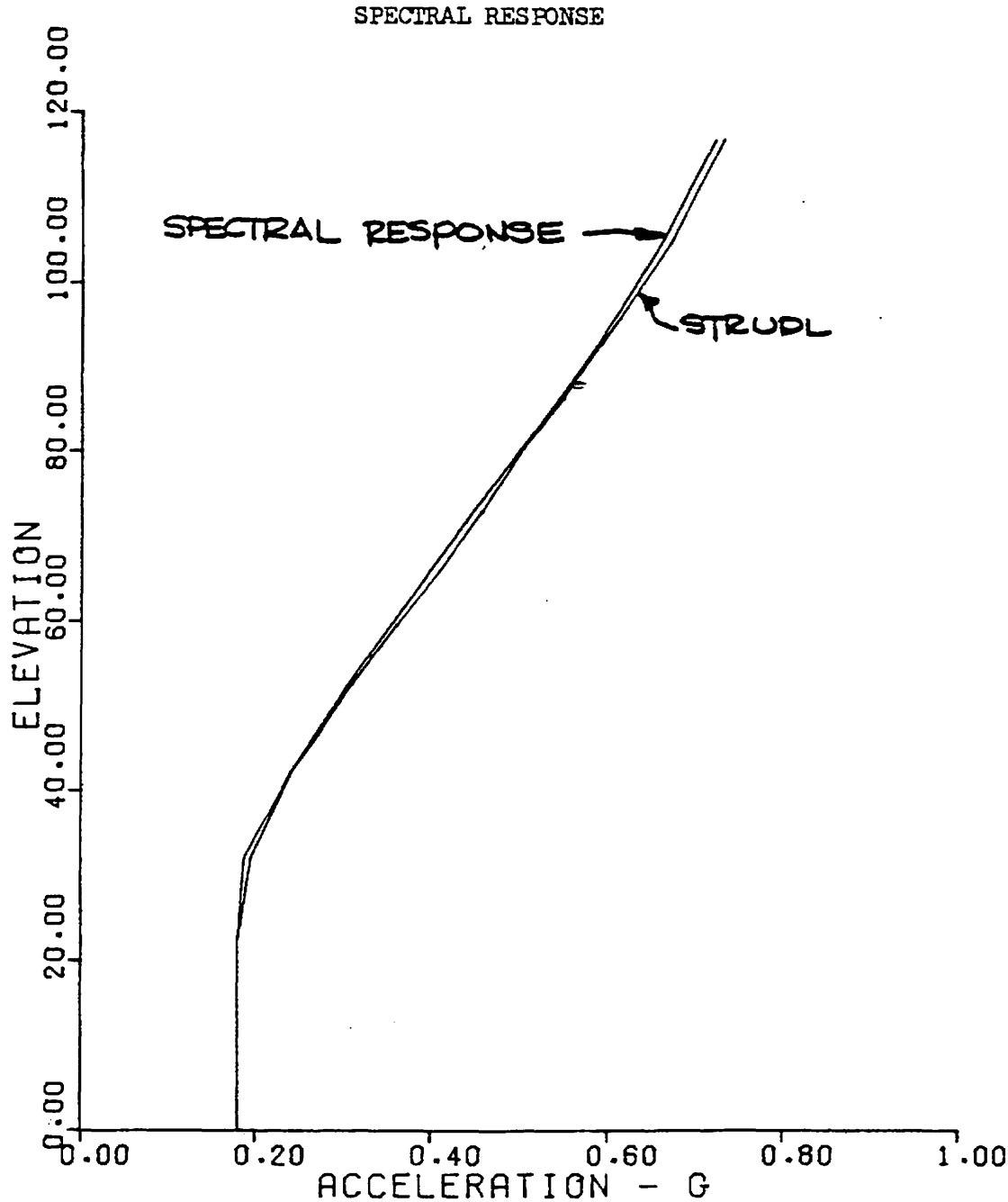

Comparison of STRUDL with SPECTRAL RESPONSE for a response spectrum analysis of a lumped-mass structural model of a nuclear power plant structure subjected to the 1940 El Centro earthquake N-S ground motion.

Figure 3.8D-2

APPENDIX 3.8E

DESIGN PROCEDURE FOR REINFORCED CONCRETE BLOCK WALLS

LIST OF FIGURES

Number	List
3.8E-1	Concrete Block Walls

APPENDIX 3.8E
DESIGN PROCEDURE FOR REINFORCED CONCRETE BLOCK WALLS

1.0 Purpose

The purpose of this design procedure is to establish a guide for the designer and checker to assure design uniformity and to assure that a safe and complete design of reinforced concrete block walls is achieved.

As a result of Integrated Design Inspection (IDI) item D4.3-9, representative "worst case" reinforced masonry walls were determined by a comparison of all walls (height, thickness, restraint, boundary conditions, etc.) using the wall drawings and evaluated. This evaluation consisted of analyzing the walls for the governing load combinations of Part 3.2 of this appendix using the allowable stresses of NUREG 0800, Section 3.8.4, Appendix A. The analysis included the effects of openings in the walls. The evaluation found the walls to be acceptable for restart, and upon completion of post- restart work, all walls are in full compliance with NUREG 0800 allowables. This IDI item D4.3 was closed per Inspection Report numbers 50-327/88-13 and 50-328/88-13--Integrated Design Inspection Followup.

2.0 General Description

This procedure is provided for use in the design and structural evaluation of reinforced concrete block walls for all Category I structures of this project. In addition, it may be used for Non-Category I structures.

Standard concrete blocks with closed ends and two cores will be used to permit the placement of one or two layers of vertical reinforcement at 8 inches on center or 16 inches on center. Only the cores that have reinforcement in them will be filled with concrete unless the wall is required for security or shielding. In this case, every core will be filled with concrete. The wall will be designed to withstand horizontal and vertical forces due to earthquake and equipment loads. The wall shall also be evaluated for its structural ability to withstand these additional loading conditions (identified in NRC IE Bulletin 80-11); impact or pressurization loads such as missile, pipe whip, pipe break, jet impingement, flooding, or tornado depressurization. If, in any of the load combinations listed in Section 3.2, the evaluation proves that the wall can withstand these additional design loads, no further action will be required for that wall. However, if the evaluation indicates that the wall cannot withstand any one of the load combinations, corrective action shall be taken to prevent failure of the wall. This may be accomplished in one of two ways:

(1) by designing a restraint system which would prevent the wall from failing, or (2) by reducing the loadings on the walls, where possible, to a safe limit through more refined theoretical analysis or physical modification of the walls or wall areas.

All openings in the walls at floor level will have to be sized so dowels in the structural slabs can be designed and located before the structural slabs are constructed. After structural slabs have been constructed, grouted-in dowels will be required to reinforce the concrete block walls. Other openings in the walls, including spare openings and sleeves by the mechanical and electrical disciplines will have to be sized, located, and designed before the block walls are installed. The spare openings and sleeves are to be filled in with concrete by the Field if they are not required.

The lintels will be designed for load distribution for short loose lintels. Only the portion of the lintel that is cast in place will be used for design. For wall spans in the vertical direction only the net area of block and the cores filled with concrete will be used for design.

Concrete block wire reinforcement shall be used in the bed joints of alternate courses of all concrete block walls. Corner and tee partition lock fittings shall be used at all wall intersections. Walls that extend to the ceiling above will either be doweled into the slab or restrained by continuous angles on both sides of the wall.

Concrete in the cores shall be placed in lift intervals or layers not to exceed 24 inches. Each layer shall be thoroughly consolidated and tied into the layer below by either rodding or internal vibration.

3.0 DESIGN CONSIDERATIONS

3.1 Materials

Materials	Specifications
Concrete block	Full length lightweight two core closed end. ASTM Designation C90, Grade N, Type I. Compressive strength = 1000 psi on gross area.
Sand	ASTM Designation C144
Portland cement	ASTM Specification C150, Type I or II.
Coarse aggregate	ASTM Specification C33, maximum size aggregate 3/4-inch; slag is not acceptable.
Mortar	ASTM Designation C270, Type S
Concrete	One part cement, 2-1/2 part sand, 2-3/4 part coarse aggregate, by weight, 6 gallons of water per bag of cement for lintels (maximum), 7 gallons of water per bag of cement for core fill (maximum). Minimum compressive strength at 28 days shall be 3,000 psi.
Reinforcement	(Vertical) ASTM Specification A615, Grade 60. Additional testing shall be carried out in accordance with Construction Specification G-2. (Horizontal) Block wire reinforcement standard grade with No. 9 side rods and No. 9 crossties, ASTM A82.

3.2 Load Combination and Allowable Stresses

Loads:

D	=	Dead Load.	Weight of wall with every other core filled with concrete. 8-inch wall = 62#/sq ft, 12-inch wall = 94#/sq ft Weight of wall with every other core filled with concrete. 8-inch wall = 86#/sq ft, 12-inch wall = 133#/sq ft
L	=	Live Load. (Vertical)	20#/sq ft on one side of wall or 10#/sq ft on each side of wall. Spacing of equipment and piping supports, restraints, and anchors shall be controlled so that these live loads are not exceeded.

E = Loads generated by Operational Basis Earthquake (OBE).

E' = Loads generated by Design Basis Earthquake (DBE).

P_a = Pressure equivalent static load within or across a compartment generated by the postulated break and including an appropriate dynamic load factor to account for the dynamic nature of the load.

Y_j = Jet impingement equivalent static load on structure generated by the postulated break and including an appropriate dynamic load factor to account for the dynamic nature of the load.

Y_m = Missile impact equivalent static load on a structure generated by or during the postulated break, as from pipe whip, and including an appropriate dynamic load factor to account for the dynamic nature of the load.

Y_r = Equivalent static load on the structure generated by the reaction on the broken high-energy pipe during the postulated break, and including an appropriate dynamic load factor to account for the dynamic nature of the load.

W_t = Loads generated by the design tornado specified for the plant. Tornado loads on interior block walls are due to tornado created differential pressure.

F = Hydrostatic equivalent static load in a structure generated by the Design Basis Flood or from a pipe break.

Load Combinations		Allowable WSD Stresses	
		Flexure	Shear
For service load conditions:			
Case I	= D+L	Block with alternate cores filled--810 psi on net area	47 psi
		Block with every core filled--900 psi	55 psi
		Concrete--1350 psi (lintel)	60 psi
		Reinforcing steel--24,000 psi	--
**Case II	= D+L+E	(Same as above except reinforcing steel = 30,000 psi)	

Load Combinations		Allowable WSD Stresses	
		Flexure	Shear
For extreme environmental and abnormal loads:			
Case III	= D+L+W_t	Block with alternate cores filled--1350 psi on net area	78 psi
		Block with every core filled--1500 psi	92 psi

Load Combinations		Allowable WSD Stresses	
		Flexure	Shear
		Concrete--2250 psi (lintel) 100 psi Reinforcing steel --54,000 psi	--
Case IV	= D+L+1.5P_a		(Same as Case III)
**Case V	= D+L+1.25P_a+1.0 (Y_j+Y_m+Y_r) +1.25E		(Same as Case III)
**Case VI	= D+L+1.0P_a+1.0 (Y_j+Y_m+Y_r) +1.0E'		(Same as Case III)
Case VII	= D+L+F		(Same as Case III)

In load cases IV, V, and VI the maximum values of P_a, Y_r, Y_j and Y_m including an appropriate dynamic load factor should be used unless a time history analysis is performed to justify otherwise.

3.3 Design of External Wall Restraints

If restraints are required on any of the walls, their design including anchorage shall conform to "Sequoyah Nuclear Plant Design Criteria for Miscellaneous Steel Components for Class I Structures" SQN-DC-V-1.3.2.

**The natural period of vibration for concrete walls will be considered. Periods to be used in conjunction with appropriate response spectra (4 percent curve for E and 7 percent curve for E') are given in Figure 3.8E-1. (These periods are based upon one-way action, more refined analysis is acceptable.)

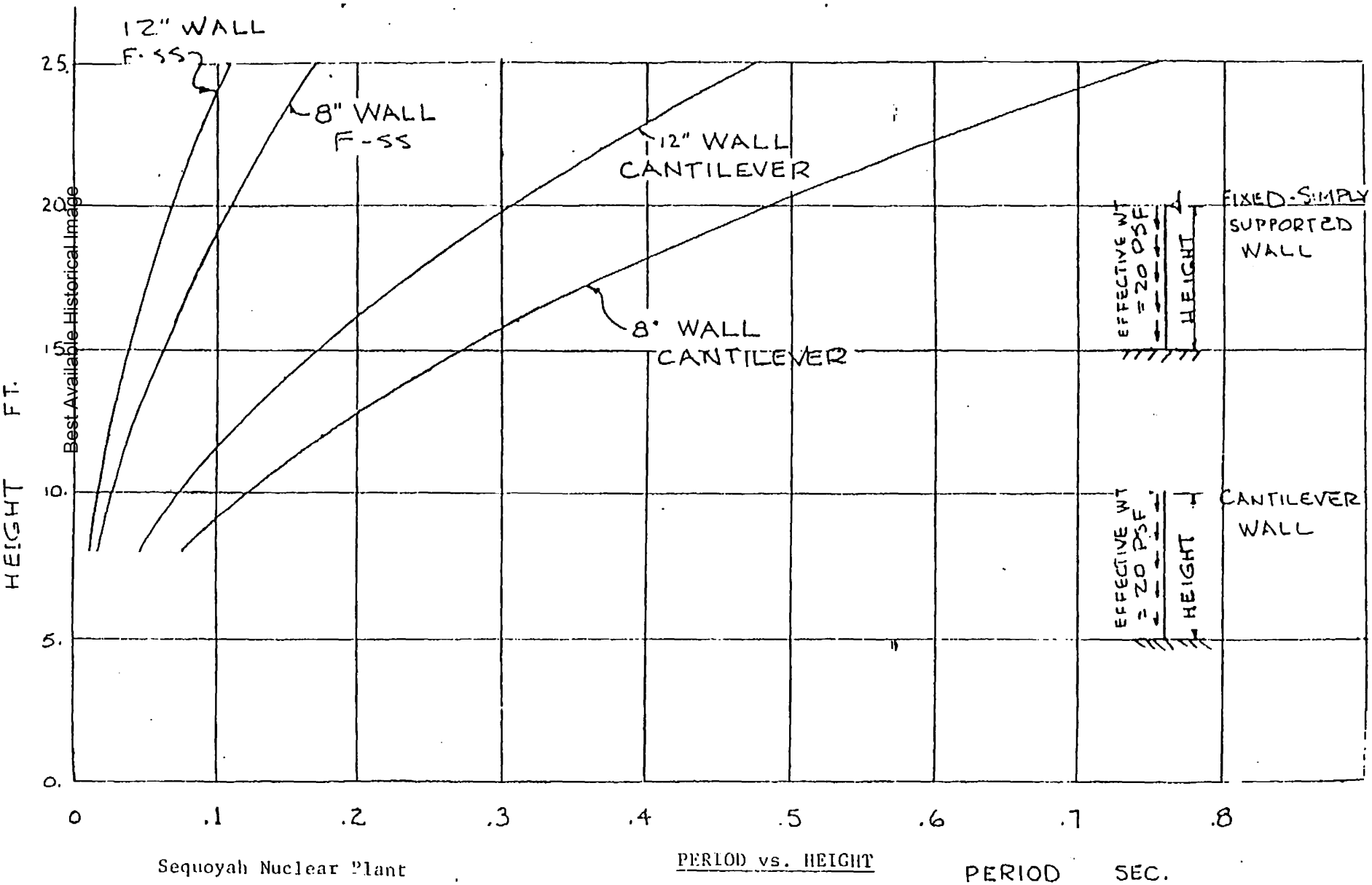

Best Available Historical Image

Sequoyah Nuclear Plant

Figure 3.8E-1

PERIOD vs. HEIGHT

CONCRETE BLOCK WALLS

f'c = 1800 psi

BLOCK ALTERNATATE CORES
FILLED WITH CONCRETE

3.9 MECHANICAL SYSTEMS AND COMPONENTS

3.9.1 Dynamic System Analysis And Testing

Numerous analytical and experimental programs have been performed to evaluate mechanical systems and components of pressurized water reactors under various loading conditions. The most significant dynamic analysis techniques, methods and test results are highlighted in the following paragraphs. Detailed information of the dynamic system analysis and testing is presented in the reports listed in References 1 and 2.

3.9.1.1 Vibration Operational Test Program

The flow modes and transients to which the system components were subjected at Sequoyah are generally defined in the preoperational test program as outlined in Chapter 14 of the Sequoyah FSAR. In particular, the following Westinghouse (W) and TVA tests are flow-vibration - temperature related:

TVA-40	Main Steam System (TVA test NCS-3 "Extraction Steam System" includes vibration testing of the Main Steam System)
TVA-22	Auxiliary Feedwater System
TVA-29	Steam Generator Blowdown System
TVA-14	Diesel Generators and Supporting Auxiliaries
TVA-25	High Pressure Fire Protection System (pumps only)
TVA-27	Control Air System (auxiliary control air compressors)
W-12.1	Ice Condenser System (glycol equipment and piping)
W-3.1 W-3.2 W-3.3	Chemical & Volume Control System
W-6.1	Safety Injection System
TVA-18 TVA-19	Essential Raw Cooling Water System
W-1.2 W-1.3 W-1.4 W-1.5 W-1.8	Reactor Cooling System

TVA-20 Component Cooling System

TVA-21 Containment Spray System

W-2.2 Residual Heat Removal System

W-5.1 Waste Disposal System
W-5.2
W-5.3
W-5.4

W-2.1B Spent Fuel Pit Cooling System

TVA-51 Flood Mode Boration System

W-6.2 Upper Head Injection System (System has been deleted)

Acceptance criteria include those stipulated in the ASME B&PV Code Section III, Subparagraph NB3622.3, "Vibration." This code states that vibration effects in piping systems shall be visually observed, and where questionable shall be measured and corrected as necessary. Measurements of vibration amplitudes are made according to amplitudes and spans of families of pipe made from the same material.

The preoperational piping dynamic effects test program at this plant consisted of the following:

1. The dynamic behavior of all piping systems was observed during preoperational tests. Bench marks were used to check expansion, restraint, and return position of the RCS, Main Steam, and Feedwater Piping following the tests.

2. The preoperational tests conducted at this plant generally follow those described in Regulatory Guide 1.68 Preoperational and Initial Startup Test Programs for Water-Cooled Power Reactors.

3. The point of maximum deflection within any pipe support span of any piping system was visually inspected and measurements taken where required during those tests.

4. The maximum half-amplitude displacement which was allowed during this program below the endurance limit stress as defined in the ASME B&PV Code, Section III, 1974.

5. A graph was constructed using the endurance limit criterion. This graph, with the pipe span for the ordinate and deflection on the abscissa, included all the pipe sizes and weights used at this plant. Also considered were the various piping materials used at this plant.

6. In those cases where the deflection exceeded these allowable deflections, corrective restraints were designed and installed in the piping system. These new restraints were incorporated into the piping system analysis.

7. The flow mode or transient condition which produced the excessive displacement was repeated to assure that vibrations had been reduced to an acceptable level.

Vibration measurements were also taken on the upper head internals, all vital pumps and rotating machinery at baseline and on a periodic basis so that excessive vibration could be corrected early in the program and/or detected if it gradually became a problem. For heat exchangers, differential pressure measurements were taken and compared with design parameters. Although not conclusive, matching of pressure drops provides a favorable indication that fluid velocities are unlikely to create resonant responses.

The preoperational tests thoroughly checked critical systems under steady state flow conditions. Additionally, transient response observations were made for the following equipment and valves:

1. Rotating Equipment

   a. Motor-driven auxiliary feedwater pumps
   b. Turbine-driven auxiliary feedwater pumps
   c. Chemical and volume control centrifugal charging pumps
   d. RHR pumps
   e. Containment spray pumps
   f. Safety injection system pumps
   g. Reactor coolant system pumps
   h. ERCW pumps
   i. Component cooling water pumps
   j. Spent Fuel pool cooling pumps

2. Check Valves in Parallel Pump Configurations

   a. RHR system 74-514 and 74-515
   b. Safety injection system 63-524 and 63-526
   c. Auxiliary feedwater system 3-830, 3-871, 3-831, 3-872, 3-832, 3-873, 3-833, 3-874

3. Vibration Measurements During Qperation of the Prototype UHI System and RCS Flow Tests

For prototype experience, we cite the Indian Point No. 2 and Trojan Pressurized Water Reactors. Trojan is an 1130 MWe Westinghouse plant, is of the same generic family as Sequoyah, has 17 x 17 fuel, and lacks only the UHI (where Sequoyah is the prototype, since deleted).

3.9.1.2 Dynamic Testing Procedures

Design of Category I mechanical equipment to withstand seismic and accident loadings is provided either by analysis or dynamic testing. Design of Category I mechanical equipment to withstand operational vibratory loadings is provided by analysis and verified by dynamic testing as described in Section 3.9.1.1.

Generally, tests are run with either of the following two objectives:

1. To obtain information on parts or systems necessary to perform the required analysis, or

2. To prove the design adequacy of a given equipment or structure without performing any analysis of this particular equipment or structure.

The need for the first type of test is dictated by lack of information on some of the inputs vital to the performance of an analysis. The available information could be completely deficient or too conservative. These tests can be either static (to obtain spring constants) or dynamic (to obtain impedance characteristics). No general descriptions can be given for this type of test because of the strong dependence on the specific needs of the analyst.

The need for the second type of test is mainly dictated by the complexity of the structure or equipment under design. This vibration testing is usually performed in a laboratory or shop on a prototype basis, using various sources of energy.

Laboratory vibration testing can be conducted by employing various forms of shakers, the variation depending on the source of the driving force. Generally, the primary source of motion may be electro-magnetic, mechanical, or hydraulic-pneumatic. Each is subject to inherent limitations which usually dictate the choice. To properly simulate the seismic disturbance, the waveform must be carefully defined. The waveform seen by a given piece of equipment depends on:

1. The earthquake motion specified for a given site.

2. The soil-structure interaction.

3. The building in which the component is housed.

4. The floor on which the equipment is located.

5. The support and attachments to the equipment.

Components located on rocks or on stiff lower floors of buildings founded on rock are subjected to random-type vibrations. Components located on the upper floors of flexible buildings or buildings on soft foundations are roughly subjected to sine beats with a frequency close to fundamental frequency of the building.

If a random vibration system is available, extreme care is paid to the selection of random driving functions having frequency content and energy conservatively approaching those of the ground or building motion caused by the specified earthquake(s).

The most common and readily available vibration testing facilities can only carry simple harmonic motion. By analytical comparison with time history response obtained with a number of real earthquake motions, it has been found that these time histories can be approximately simulated with wave forms having the shape of sine beats with 5 or 10 cycles per beat, a frequency equal to the component natural frequencies, and maximum amplitude equal to the maximum seismic acceleration to which the component needs to be qualified. For equipment located on building

floors, the maximum seismic input acceleration is the maximum floor acceleration. This is obtained from the dynamic analysis of the building or from the appropriate floor response spectrum at the zero period of the equipment.

Where sine beat testing is performed to verify the design of seismic Category I equipment, sine beat inputs are applied to each of three perpendicular axes independently. The sine beat inputs are applied not only at the equipment natural frequencies but also at many frequencies (spaced at about 1/2 octave) below 33 Hz to ensure that the equipment would function normally regardless of uncertainties of building or equipment, thereby producing the most damaging effect to the components. This test excites the component to motion greater than the input and also produces fatigue damage well above that produced by seismic disturbances. This method is conservative in that it assumes that building natural frequency coincides with that of the equipment. Any possible coupling effect loses importance when compared to the excitation of components at sensitive frequencies as is done by the sine beat test. This test therefore provides more positive proof of equipment capability that the simultaneous random input test which, because of phase relationships, could result in less severe application of the seismic input. Justification of the use of single axis sine beat tests, as implemented by Westinghouse to seismically qualify equipment, is presented in Reference 3.

Detailed testing criteria have been specified by Westinghouse. These include, briefly:

1. A continuous sweep frequency search is performed to determine the natural frequencies of the equipment.

2. Sine beat tests are performed at test frequencies chosen to adequately and completely qualify the equipment. The natural frequencies found by the search of item 1 shall be included in these test frequencies, and serve as a starting point in the determination of other test frequencies.

3. A test at any frequency consists of five beats with a pause between beats such that there is no significant superposition of motion. The number of cycles per beat shall be either 5 or 10, depending on the percentage of critical damping of the building and equipment (References 3 and 4).

4. The peak horizontal SSE acceleration as a function of the test frequency is applied to the equipment, 2/3 of the horizontal value shall be used for input in the vertical direction.

5. A frequency search and sine beat test shall be performed independently for the two horizontal directions and the vertical direction.

Equipment is evaluated in its operating mode either during the testing program as defined above, or by analysis. These procedures assure that the equipment will function when subjected to seismic loadings.

3.9.1.3 Dynamic System Analysis Methods for Reactor Internals

3.9.1.3.1 Analysis Methods

The reactor internals are modeled dynamically for a) loads produced by a double-ended pipe rupture of the reactor coolant loop (the Design Basis Accident, DBA), for both cold and hot leg breaks, b) response due to a Safe Shutdown Earthquake [SSE], and c) for the most unfavorable combination of DBA and SSE. Seismic analysis of the reactor vessel and its internals are described in Subsections 3.7.2 and 3.7.3.

Figure 3.9.1-1 shows a sandwich type upper internals support structure made of two plates. The upper support plate is reinforced by a grid of beams, and the upper core plate is connected by hollow columns bolted to the plates, with the guide tubes pinned to the core plate. This structure compresses the fuel assemblies and the annular hold-down spring during assembly and is subjected to vertical upward forces from these springs. During operation, normal and abnormal transverse flow drag forces are applied to the columns and guide tubes and differential pressure exists across the horizontal plates. The forces on the columns and guide tubes vary with the distance from the outlet nozzles. Because of the complexity of the upper package geometry and loading conditions, the modeling of the reactor internals was performed by using the method of analysis based on the finite element idealization of the structure and matrix displacement for each finite element. This finite-element structural analysis computer program permits static elastic and plastic analysis, steady state and transient heat transfer, dynamic mode shape analysis, linear and non-linear dynamic analysis, and plastic dynamic analysis. Descriptions of the techniques used to model the various parts of the internals follow. The top structure, deep beam, and upper core plate have been modeled with flat shell elements, the support columns with "three-dimensional" beam elements and the fuel assemblies and hold-down springs with "three-dimensional" spring elements. Because of symmetry, a one-eighth slice of the upper package has been modeled. Figure 3.9.1-2 shows the geometry of the model with the various components separated. The core plate is perforated and is modeled as a geometrically equivalent solid plate which has elastic constants modified according to the theory of perforated plates.

Columns of two different lengths are modeled, the long columns connecting the plates and the short columns connecting the beam grid with the upper core plate.

Under the loads used for design, according to the operating condition under study, the previously described computer program provides stresses and deflections at all model points.

The study of the lower internals structure which supports the core is another application of the system code to determine the behavior of a complex structure subjected to a given load. This is a sandwich-type structure and consists essentially of the perforated support casting, support columns, and lower perforated core plate. To obtain a realistic representation of the interaction of the components, the lower support structure was also modeled using the finite-element structural analysis computer programs. Two geometry plots (views from different angles) of the analytical model, which is built of finite shell and pipe elements, are given in Figure 3.9.1-3. The core plate, diffuser plate, and support casting, as well as the lower part of the core barrel, are represented by flat triangular shell elements. Reduced plate strength, due to the perforations, is accounted for by using an equivalent elastic modulus and Poison ratio in the calculations. This

structure is loaded with various vertical forces, due to normal and abnormal operations, and the deflections and stresses are obtained for each case. The experimental values have been converted according to basic scaling laws and applied to the prototype structure. The comparison of experimental and theoretical vertical deflections, presented in Figure 3.9.1-4 shows good agreement. The test values are larger, as expected, since they are obtained in the absence of the core plate, diffuser plate, and support columns structures, making the casting more flexible. Using the same model, this type of system code is also used to compute stresses and deformation due to non-uniform temperature distributions. With temperature at the component surfaces and the gradient generated by the heat generation as input for the system code, the deflected shape of the structure is obtained. Stresses in components such as the perforated upper and lower core plates, core support plate and top support plate are then computed using the stress intensification factor provided by the standard theory of perforated plates.

3.9.1.3.2 Preoperational Tests

The program used to establish the integrity of reactor internals has involved extensive design analysis, model testing and post hot functional inspection. Additionally, a full size reactor has been instrumented (Reference 1) to measure the Dynamic behavior of a Sequoyah-size plant and has compared measurements with predicted values.

This program was instituted as part of a basic philosophy of instrumenting the internals of the first-of-a-kind current Nuclear Steam Supply System designs for power plants. The magnitude of this test program was much greater than the intent of the philosophy, and was established as part of an extensive plan to develop theories and basic concepts related to internals vibration under various operating conditions. Thus, not only is added assurance obtained that all of the hardware will operate in the manner for which it was designed, but these data also assist in the development of increased capability for the prediction of the dynamic behavior of pressurized water reactor (PWR) internals. The previous "first-of-a-kind" plants that were instrumented are R. E. Ginna (two loops), H. B. Robinson (three loops) and Indian Point Unit 2 (four loops).

The Indian Point II reactor has been established as the prototype for a four-loop plant internals verification program. Subsequent four-loop plants are similar in design. Past experience with other reactors indicates that plants of similar designs behave in a similar manner. For these reasons a comprehensive instrumentation program was conducted on the Indian Point Plant to confirm the behavior of the reactor components. The main objectives of this test were to increase confidence in the adequacy of the internals by determining stress or deflection levels at key locations and to obtain data that can be used to develop improved analytical tools for prediction of internals vibration.

In the final analysis, the proof that the internals are adequate, free from harmful vibrations and have performed as intended is through component observations and examinations during service. With this thought, Indian Point II, the four-loop prototype, was subjected to a thorough visual and dye-penetrant examination by qualified Quality Assurance engineers before and after the hot functional test. This inspection was in addition to the normal inspection of the internals in the shop and before and after shipment.

The only significant differences between Indian Point 2 and the Sequoyah plants are in the geometry.

The bore size of the lower instrumentation guides is larger on Sequoyah to accommodate larger instrument thimbles. Another example of geometric difference is in the upper core plan. Since Sequoyah has fewer head penetrations and, therefore, fewer possible rod cluster locations, Sequoyah has fewer rod cluster control positions in the upper core plan. These differences are not considered to be of any structural significance.

For a discussion of the verification and pre-operational testing for Sequoyah see References 5 and 6.

This modification and the resulting benefits are all in the direction of reducing the vibration amplitude of the internals, as was confirmed with a 1/24th-scale model. The flow test was conducted on a model with a thermal shield. The results indicated that the vibration levels of the internals were low and levels on the thermal shield were negligible. This set of core support structures will receive the normal pre-and post-hot functional examination for integrity per Paragraph D, "Regulations for Reactor Internals Similar to the Prototype Design," of Regulatory Guide 1.20, for units subsequent to a prototype.

Regulatory Guide 1.20, "Vibration Measurements on Reactor Internals," is satisfied for this four-loop plant as described in the balance of this section.

The internals were subject to a thorough examination prior to preoperational flow tests. This examination included the 35 points shown in Figure 3.9.1-5. These 35 points are characterized as the following:

1. All major load-bearing elements of the reactor internals relied upon to retain the core structure in place.

2. The lateral, vertical and torsional restraints provided within the vessel.

3. Those locking and bolting devices whose failure could adversely affect the structural integrity of the internals.

4. Those other locations on the reactor internal components which were examined on the prototype Indian Point II design.

The inside of the reactor vessel was inspected before and after the hot-functional test, with all the internals removed, to verify that no loose parts or foreign material were in evidence.

1. <u>Lower Internals</u>. A particularly close inspection was made on the following items or areas using a 5X or 10X magnifying glass or penetrant testing where applicable. The locations of these areas are shown in Figure 3.9.1-5.

    a. Upper barrel flange and girth weld.

b. Upper barrel to lower barrel girth weld.

c. Upper core plate aligning pin. Examine for any shadow marks, burnishing, buffing, or scoring. Check for the soundness of lockwelds.

d. Irradiation specimen basket bolt and locking devices.

e. Baffle assembly locking devices. Check for lockweld integrity.

f. Lower barrel to core support girth weld.

g. Thermal shield bolt and locking devices. Examine the connections for evidence of change in tightness of lockweld integrity.

h. Radial support key welds to barrel.

i. Insert locking devices. Examine soundness of lockwelds.

j. Core support columns and instrumentation guide tubes. Check all the joints for tightness and soundness of the locking devices.

k. Secondary core support assembly welds.

l. Insert locking devices. Examine soundness of lockwelds.

m. Lower radial support lugs and inserts. Examine for any shadow marks, burnishing, buffing or scoring. Check the integrity of the lock-welds. These members supply the radial and torsional constraint of the internals at the bottom relative to the reactor vessel while permitting axial growth between the two. One would expect to see, on the bearing surfaces of the key and keyway, burnishing, buffing or shadow marks which would indicate pressure loading and relative motion between the two parts. Some scoring of engaging surfaces is also possible and acceptable.

n. Bearing surfaces of upper core plate radial support key.

o. Gaps and baffle joints. Check for gaps between baffle and top former and at baffle to baffle joints.

2. Upper Internals. A particularly close inspection was made on the following items or areas using a magnifying glass of 5X or 10X magnification, where necessary. The locations of these areas are shown in Figure 3.9.1-5.

a. Thermocouple conduits, clamps and couplings.

b. Guide tube, support column and thermocouple assembly locking devices.

c. Support column and conduit assembly clamp welds.

d Radial support keys and insert between the upper core plate and upper core barrel. Examine for any shadow marks, burnishing, buffing, or scoring. Check the integrity of lockwelds.

e. Connections of the support columns and guide tubes to the upper core plate. Check for tightness.

f. Thermocouple conduit gusset and clamp welds.

g. Thermocouple end-plugs. Check for tightness.

h. Guide tube closure welds, tube-transition plate welds and card welds.

Acceptance standards are the same as required in the shop by the original design drawings and specifications.

During the hot functional test, the internals were subjected to a total operating time, at greater than normal full-flow conditions (four pumps operating), for at least 240 hours. This provides a cyclic loading of approximately 10^7 cycles on the main structural elements of the internals. In addition, there was some operating time with only one, two and three pumps operating.

Therefore, when no signs of abnormal wear are found or of harmful vibration being present in the core support structures, and with no apparent structural changes taking place, the four-loop core support structures are considered adequate.

3.9.1.3.3 Flow-Induced Vibration

The dynamic behavior of reactor components has been studied using experimental data obtained from operating reactors along with results of model tests and static and dynamic tests in the fabricators' shops and at plant sites. Extensive instrumentation programs to measure vibration of reactor internals (including prototype units of various reactors) have been carried out during preoperational flow tests and reactor operation.

From scale model tests, information on stresses, displacements, flow distribution and fluctuating differential pressures is obtained. Studies have been performed to verify the validity and determine the prediction accuracy of models for determining reactor internals vibration due to flow excitation. Similarity laws need to be satisfied to assure that the model response can be correlated to the real prototype behavior.

Vibration of structural parts during preoperational tests is measured using displacement gauges, accelerometers and strain transducers. The signals are recorded with magnetic tape records. Onsite and offsite signal analysis is done using both hybrid real-time and digital techniques to determine the approximate frequency and phase content. In some structural components the spectral content of the signals include a nearly discrete frequency or very narrow band, usually

due to excitation by the main coolant pumps and other components that reflect the response of the structure at a natural frequency to broad-band, mechanically or flow-induced, excitation. Damping factors are also obtained from wave analyses.

It is known from the theory of shells that the normal modes of a cylindrical shell can be expressed as sine and cosine combinations with indices m and n indicating the number of axial half waves and circumferential waves, respectively. The shape of each mode and the corresponding natural frequencies are functions of the numbers m and n. The general expression for the radial displacement of a simply supported shell is:

$$w(x,\Psi,t)=\sum_{n=0}^{\infty}\sum_{m=1}^{\infty}\left[A_{nm}(t)\cos n\Psi+B_{nm}(t)\sin n\Psi\right]\sin\frac{m\pi x}{L}$$

The shell vibration at a natural frequency depends on the boundary conditions at the ends. The effect of the ends is negligible for long shells or for higher-order m modes, and long shells will have the lowest frequency for n = 2 (elliptical mode). For short shells, the effects of the ends are more important, and the shell will tend to vibrate in modes corresponding to values of $n \geq 2$.

With these previous considerations as a basis, the following procedures have been performed in the study of thermal shield vibration:

1. During a test program performed with a 1/7th-scale model of the thermal shield in water the natural frequencies and the maximum vibration amplitude were measured.

2. Shaker test programs performed on a prototype thermal shield with the actual boundary conditions, provided full scale natural frequencies and mode shapes in air. These modes were established by measuring accelerations at the center, top (support elevation) and bottom of the shield. In Figure 3.9.1-6 the results obtained are plotted for n = 4 and correspond to a thermal shield with eight supports which are indicated in the same figure. The amplitudes of vibration are fitted with a curve $y = A \sin 4\Theta$.

3. Maximum displacements were measured during the preoperational reactor test and were correlated with the information obtained in the 1/7-scale model and shaker test.

4. In Figure 3.9.1-7 the maximum amplitudes of vibration are plotted as measured on a thermal shield with six supports. The experimental points have been least square fitted with a curve $y = A \sin 3\Theta$.

In general, the study follows two parallel procedures: obtain frequencies and spring constants analytically, and confirm these values from the results of the tests. Damping coefficients are established experimentally, and forcing functions are estimated from pressure fluctuations measured during operation and in models. Once these factors are established, the response can be computed analytically. In parallel, the responses of important reactor structures are measured during preoperational reactor tests and the frequencies and mode shapes of the structures are obtained. Once all the dynamic parameters are obtained as explained above, the forcing functions can be estimated. These two procedures are not independent; both are performed

simultaneously and when combined they provide indications of the internals behavior during reactor operation. Finally it should be mentioned that internals behavior during reactor operation has been measured using mechanical devices and nuclear noise methods. The last method involves the frequency spectral analysis of signals from out-of-core ion chambers. Information is obtained on the frequency, amplitude, and damping of the vertical and lateral vibrations of the core because relative motions of the core causes reactivity perturbations and fluctuations in the neutron flux signal level.

Some components, such as control rod guide tubes, fuel rods and incore instrumentation tubes, are subjected to cross flow and parallel flow with respect to the axis of the structure. In these cases there are numerous theoretical and experimental studies directed toward establishing the response of the structure (Reference 2). These studies also provide information on the added apparent mass of the water, which has the effect of decreasing the natural frequency of the component. For both cases, cross and parallel, the response is obtained after the forcing function and the damping of the system are determined.

Cross flow may excite the structure with periodic vortex shedding, which gives rise to a lateral oscillatory lift force perpendicular to the flow direction and a drag force in the flow direction. The dimensionless vortex shedding frequency, or Strouhal number S = fD/V, is a function of the Reynolds number and known for different cross sections. The structure is usually designed in such a manner that its natural frequency in water is considerably higher than the vortex shedding frequency so as to avoid coincidence. The lateral force per unit length is given by:

$$F(x, t) = C_L \, [1/2\rho_f \; V(x)^2] \, D \cos \omega t \qquad (3.9\text{-}1)$$

where

C_L = the oscillatory lift coefficient including correlation length effects (depending on the Reynolds number)

ρ_f = fluid density

V = cross flow velocity

D = the characteristic diameter

ω = the vortex shedding circular frequency

Data obtained from preoperational and shop tests are used to confirm the coefficients used.

3.9.1.3.4 Vibration Monitoring

Since reactor internals of a given type (i.e., two, three or four loop) are designed and manufactured to essentially the same procedures, processes and similar drawings, the response of these structures within a pressurized water reactor environment is similar.

Performance data from the instrumentation of actual reactors as well as mechanical and flow scale models are available (References 1, 2, 5, 6, 7, and 8).

For example, the preoperational flow test on the Indian Point 2 Plant, a four-loop prototype plant, has been completed. The pre-and post-pre-operational flow test examination of the internals has been completed indicating that all the components performed as predicted. No evidence of damage or incipient failure has been found.

The testing programs consisted of measurements of the stresses, deflections and responses of select key points in the internals structures during hot functional and low power physics tests. The main purpose of this testing program was to assure that no unexpected large amplitudes of vibration existed in the internals structure during operation.

These tests, however, were by no means designed or intended to be capable of detecting possible incipient failures of all the various components within the core support structures. They were designed with the purpose of giving data and results on what were assumed to be indicators of overall core support structure performance and to verify particular stress and deflection quantities.

3.9.1.3.5 Dynamic Analysis of Safety-Related Mechanical Equipment

A description of the analyses used in the design of safety-related mechanical equipment such as pumps and heat exchangers to withstand seismic loading is given in Paragraphs 3.7.2.1 and 3.7.3.1.

3.9.1.3.6 Dynamic Analysis of the Ice Condenser

This information is presented in Chapter 6.

3.9.1.3.7 Inelastic Stress Analysis

No plastic instability allowable limits are used when dynamic analysis is performed. The limit analysis methods have the limits established by the ASME Section III for Normal, Upset and Emergency Conditions. (Summer 1968 Addenda to the ASME Boiler and Pressure Code, Section III.) For these cases, the limits are sufficiently low to assure that the elastic system analysis is not invalidated. For faulted conditions, the limits are specified in Paragraph 5.2.1.3. These limits are established in such a manner that there is an equivalence with the adopted elastic limits and consequently will not invalidate the elastic system analysis. Particular cases of concern are checked by readjusting the elastic system analysis.

3.9.1.3.8 Core Components

Stainless steel clad silver-indium-cadmium alloy absorber rods are resistant to radiation and thermal damage thereby ensuring their effectiveness under all operating conditions. Rods of similar design have been successfully used in the original and reload cores of San Onofre, Connecticut-Yankee, and others.

Two burnable poison rods of smaller length but similar in design to those planned in this reactor have been exposed to inpile test conditions in the Saxton Test Reactor in October 1967. A visual examination of the rods was made in early June, 1968 and a visual and profilometer examination was made on July 30, 1968 after an exposure of 1900 effective full power hours (approximately 25 percent B^{10} depletion). The rods were found to be in excellent condition and profilometry results showed no dimensional variation from the initial condition.

An experimental verification of the reactivity worth calculations for borosilicate glass tubing has been accomplished. Similar rods have been successfully operated in the Ginna reactor with no evidence of deficiency.

Manufacturing defects will not appear during the hot functional tests; any manufacturing defect will be detected in the shop or during the assembly period. The basic program that is currently being used to insure adequacy of manufacturing practices consists of:

1. Extremely thorough nil ductility temperature and Quality Assurance Program at the internals vendors.

2. Extensive visual examination at the plant site prior to hot functional testing of the primary system.

3. Running the hot functional test with full flow for 240 hours which accumulate approximately 10^7 cycles on the majority of the core structure components.

4. Re-examining all areas of the internals after the 240 hour hot functional test.

3.9.1.4 Correlation of Tests and Analytical Results for Reactor Internals

The program to establish internals integrity has been to utilize extensive design analysis, model testing, and pre- and post-hot functional inspection. Additionally, Westinghouse has instrumented full size reactors to measure the dynamic behavior of the first-of-a-kind of each size plant and has compared measurement with predicted values. This program was instituted as part of the basic philosophy of Westinghouse to instrument the internals of a first-of-a-kind of the current nuclear steam supply system designs for power plants. The previous "first-of-a-kind" plants that were instrumented were Jose Cabrera, 1-loop, R. E. Ginna, 2-loop, H. B. Robinson, 3-loop and Indian Point 2, 4-loop. The Indian Point No. 2 plant has been the most thoroughly instrumented plant to date. The magnitude of that test program was much greater than the intent of the philosophy, and was established as part of an extensive plan to develop theories and basic concepts related to internals vibration under various operating conditions. Thus, not only is added assurance obtained that all of the hardware will operate in the manner for which it was designed, but these data also assist in the development of increased capability for the prediction of the dynamic behavior of PWR internals.

The data collected from the 4-loop Indian Point 2 plant compared very well with similar data taken on other plants. Further, the predictions of the dynamic response that were made prior to the test program for highly stressed components were closely substantiated by the results of this testing, showing clearly that the structural dynamic response of the internals is both understood and well behaved.

The flow condition to which the vessel and internals are subjected is fairly uniform over a wide range of frequencies, and, therefore, the internals will be excited at the natural frequencies of the components. The equipment motion at these frequencies will be amplified. The dynamic beam and shell mode shapes that are associated with these frequencies can be identified. The amount of amplification at any point in the structure will depend on the the relationship of that point to the vibratory mode shapes of the resonant frequencies.

Complete identification of the resonant frequencies and the associated modes from pre-operational tests allows correlation with the associated resonant frequencies and modes from a mathematical model of the internals. This model can then be used for the dynamic analysis of the reactor internals under LOCA loadings. This correlation provides verification that the modeling techniques used are accurate and that the analytical dynamic LOCA response of the reactor internals will be determined from a valid model.

3.9.1.5 Analysis Methods Under LOCA Loadings

Parts 1, 2, and 4 of FSAR Section 3.9.1.5 as described in Regulatory Guide 1.70 Revision 1 are provided in Subsection 3.9.3 (Part 3 is listed below).

3. The scope of the different dynamic analysis techniques and methods used to evaluate mechanical systems and components of the Westinghouse Pressurized Water Reactor for loads produced by a auxiliary line branch nozzle pipe rupture on the main coolant loop (DBA), is very extensive.

Reactor Internals Analysis

Analysis of the reactor internals for blowdown loads resulting from a loss of coolant accident is based on the time history response of the internals to simultaneously applied blowdown forcing functions. The forcing functions are defined at points in the system where changes in cross section or direction of flow occur such that differential loads are generated during the blowdown transient. The dynamic analysis can employ the displacement method, lumped parameters, stiffness matrix formulations and assumes that all components behave in a linearly elastic manner.

In addition, because of the complexity of the system and the components, it is necessary to use finite element stress analysis codes to provide more detailed information at various points.

A comprehensive explanation of all the techniques and analytical methods used cannot be included in the scope of this FSAR. The more important and relevant methods are presented as an overview in Section 3.9.3.5.

Reactor Coolant Loop (RCL) Analysis

A flow diagram representing the procedure for the complex time-history dynamic solution is shown in Figure 3.9.1-8. The time-history nonlinear dynamic structural analysis was performed in the following manner:

The natural frequencies and normal modes of the loop were determined using the WESTDYN computer program. The natural frequencies, normal modes, and time-history forcing functions were used in the Westinghouse proprietary computer program, WESTDYN, to determine the time-history dynamic deflection response of the lumped-mass representation of the RCL.

Where a support was considered as a nonlinear (single direction of action) member, the support forces were a time-history calculation of the program WESTDYN. In those cases where a support (for instance, a column) had different stiffness values in tension and compression, the smaller value was input as a linear spring, and the difference was input as a nonlinear element in the appropriate direction.

The computer program WESTDYN applied the time-history dynamic forces at mass points on the loop RCL model along with RPV LOCA motion and computed a response of internal forces, deflections, and stresses at each end of the members of the RCL piping system.

3.9.1.6 Analytical Methods for ASME Code Class 1 NSSS Components

No plastic instability allowable limits given in ASME Section III are used when dynamic analysis is performed. The limit analysis methods have the limits established by ASME Section III for Normal, Upset and Emergency Conditions. For these cases, the limits are sufficiently low to assure that the elastic system analysis is not invalidated. For ASME Code Class 1 NSSS components, the stress limits for faulted loading conditions are specified in Section 5.2. These faulted condition limits are established in such a manner that there is equivalence with the adopted elastic limits and consequently will not invalidate the elastic system analysis. Particular cases of concern are checked by readjusting the elastic system analysis.

For components other than Class 1 NSSS components, the stress limits for all loading conditions are specified in Sections 3.9.2 and 3.9.3.

3.9.2 Safety Class B, C, and D Fluid Components (Includes Class A piping (Reactor Coolant Loop Branch Lines) analyzed by TVA.)

3.9.2.1 Plant Conditions and Design Loading Combinations

Design pressures, temperatures, and other information that provide the basis for the design of safety-related systems and components are presented in the corresponding sections that describe the system functional requirements. Codes that govern the analysis of vessels, tanks, valves, pumps, and piping are defined in Table 3.9.2-1. Environmental equipment such as ventilation and air treatment components and other equipment which is safety related but which have no applicable code for design are qualified for the loading combinations specified in Table 3.9.2-2 by analysis and/or test in accordance with guidelines established by IEEE 344-71.

The seismic qualification of safety-related electrical and mechanical equipment (including fluid system components such as pumps, valves, and tanks) at SQN has been evaluated against current criteria, IEEE 344-1975 and Regulatory Guide 1.100 (Reference 14). The NRC's Seismic Qualification Review Team (SQRT) conducted the evaluation during the licensing phase. The SQRT concluded that the SQN equipment, originally qualified in accordance with IEEE 344-1971, satisfies the requirements of current criteria (Reference 15). The results of the NRC SQRT audit provide justification for making IEEE 344-1975 the design basis acceptance criteria for the seismic qualification of safety-related electrical mechanical equipment at Sequoyah. In accordance with the SQRT audit commitments, to the fullest extent reasonably possible, this acceptance criteria has been used for procurement of new equipment and evaluation of existing equipment for the Sequoyah design basis seismic events since September 1, 1974 (Reference 16).

Subsection 3.9.3 describes the analytical methods used for NSSS components not covered by the ASME code of record.

3.9.2.2 Design Loading Combinations

Design loading combinations and allowable stress levels for classes B, C, and D components (excluding piping) are shown in Tables 3.9.2-2 and 3.9.2-3.

Design loading combinations and allowable stress levels for classes B, C, and D piping are shown in Table 3.9.2-4.

Design loading combinations and allowable stress levels for piping supports are shown in Table 3.9.2-5.

Design loading combinations are categorized with respect to normal, upset, and faulted conditions. The categories are defined as follows:

1. Normal Conditions. Any condition in the course of system startup, operation in the design power range, and system shutdown, in the absence of upset, faulted, and test conditions.

2. Upset Conditions. Any deviations from normal conditions anticipated to occur often enough that design should include a capability to withstand the conditions without operational impairment. The upset conditions include those transients which result from any single operator error or control malfunction, transients caused by a fault in a system component requiring its isolation from the system, transients due to loss of load or power, and any system upset not resulting in a forced outage. The upset condition includes the effects of a one-half safe shutdown earthquake for which the system must remain operational or must regain its operational status.

3. Faulted Conditions. Those combinations of conditions associated with extremely low probability, postulated events whose consequences are such that the integrity and functionality of the nuclear energy system may be impaired to the extent that considerations of public health and safety are involved. The faulted condition includes the effects of the safe shutdown earthquake and the dynamic effects of postulated pipe rupture considered as separate events (see Table 3.9.2-2). It also includes the combined effects of a SSE event and the containment motion from DBA LOCA event.

3.9.2.3 Inelastic Deformation

The stress limits for the faulted condition for groups B, C, and D components are within the code allowable for primary loads. Other safety related equipment which has no applicable code for design is qualified as described in Sections 3.9.2.1 and 3.9.3. Consequently, functional and structural integrity are assured for the faulted condition.

3.9.2.4 Design and Installation Criteria, Pressure Relieving Devices

The design and installation of pressure relieving devices are consistent with the requirements established by Regulatory Guide 1.67, "Installation of Overpressure Protective Devices."

The safety valves are mounted on a header and introduce torsion, bending, and thrust loads in the header during valve operation. The header has been designed to accommodate both dynamic and static loading effects of all valves blowing down simultaneously.

The safety valves and power-operated atmospheric relief valves are Seismic Category I components. They have been seismically qualified by analyses and/or test per criteria presented in Section 3.7.3 and Table 3.9.2-3.

Pressure relief valves in auxiliary safety-related systems have been installed considering loads carried in the support members produced by:

1. deadweight of valve and appurtenances,

2. thermal effects,

3. seismic effects,

4. maximum valve thrust, moment, and torsional loading effects, and

5. internal pressure

Relief valves that discharge to the atmosphere are either rigidly supported by their own individual support or the nozzle and component to which the valve is attached (vessel, tank, or pipe) have been designed to carry the valve static and dynamic loads. Individual supports have been designed to stress levels defined in Table 3.9.2-5. Stresses in nozzles and components produced by the valve loads considered above are determined per the method delineated in Welding Research Council Bulletin No. 107, or other appropriate analytical techniques, and are combined with concurrent loads for the component. Relief valves blowing down is considered as an upset loading condition for the plant. Therefore, the load cases and allowable stress intensities for the component supporting the valve loads are in accordance with those given in Tables 3.9.2-2 and 3.9.2-3.

Loading associated with relief valves discharging through piping components to a collector tank are analyzed considering the surge effects of the initial discharge through the pipe. This condition is considered as an upset loading condition for the piping components connecting to the valve and the allowable stress intensity is in accordance with those for piping components tabulated in Table 3.9.2-4.

3.9.2.5 Stress Levels for Category I Components

3.9.2.5.1 Scope of System Analysis

TVA Class A Piping (Excluding the Reactor Coolant Loops)

The scope consists of TVA Class A piping within the reactor coolant pressure boundary, but excluding the reactor coolant loops, as shown in the following simplified figures:

1. Reactor Coolant System Flow Diagram (Figure 5.1-1)

2. Safety injection System Flow Diagram (Figure 6.3.2-1)

3. Chemical Volume and Control Flow Diagram (Figures 9.3.4-1,-2,-3)

4. Residual Heat Removal Flow Diagram (Figure 5.5.7-1)

The following is a listing of Class A piping analyzed by TVA:

1. Charging line and alternate charging line from the designated isolation or check valve up to the branch connections on the reactor coolant loop.

2. Letdown line and excess letdown line from the branch connections on the reactor coolant loop to the designated isolation or check valve.

3. Pressurizer spray lines from the reactor coolant cold legs to the spray nozzle on the pressurizer vessel.

4. Residual heat removal lines to/from the reactor coolant loops up to designated isolation or check valve.

5. Safety injection lines from the designated isolation or check valve to the reactor coolant loops.

6. Accumulator lines from the designated isolation or check valve to the reactor coolant loops.

7. Loop fill, loop drain, sample, and instrument lines to/from the designated isolation valve to/from the reactor coolant loops.

8. Pressurizer surge line from one reactor coolant loop hot leg to the pressurizer vessel inlet nozzle.(Westinghouse performed the fatigue evaluation of the surge line to demonstrate compliance with NRC Bulletin 88-11)

9. Pressure relief lines from nozzles on top of the pressurizer vessel up to and through the power-operated pressurizer relief valves and pressurizer safety valves.

10. Seal injection water and labyrinth differential pressure lines to/from the reactor coolant pump inside reactor containment.

11. Auxiliary spray line from the designated isolation valve to the pressurizer spray line header.

12. Sample lines from pressurizer or loop to the designated isolation valve.

13. Any other lines of TVA Class A as indicated on Engineering Flow Diagrams.

<u>TVA Class B, C, D, and Non-Nuclear Safety Piping</u>

TVA has evaluated the necessity of performing a rigorous analysis on all piping systems and identified the limits of the analysis using the following guidelines:

1. Analyze most TVA Class B, C, and D lines 6-inch diameter and larger. Note: Where practical, Alternate Analysis may be performed on small sections of moderate energy 6 inches and larger Class B, C, or D piping. For a description of the Alternate Analysis methodology, see Section 3.7.3.9.

2. Analyze all piping in Category I structures larger than 1-inch diameter that has a maximum operating temperature of 200°F or greater and a maximum operating pressure of 275 psig or greater, unless it can be determined that there is not a potential for unacceptable pipe rupture interactions.

3. Analyze piping which, due to high temperature or other extraordinary loading conditions, cannot be economically or practically supported using alternate analysis procedures.

4. All systems requiring seismic qualification, but not requiring complete analysis as outlined above, will be evaluated according to the procedures outlined in Section 3.9.2.6.

The following systems are within the scope outlined above, and are being completely analyzed for thermal, seismic, transient, design basis accident, seismic anchor movement, and deadweight conditions:

1. Main steam system
2. Main steam blowdown system
3. Feedwater system
4. Auxiliary feedwater system
5. Chemical and volume control system
6. Safety injection system
7. Containment spray system
8. Residual heat removal system
9. Component cooling system
10. Essential raw cooling water
11. Auxiliary boiler piping
12. Spent fuel pool cooling and cleaning
13. Parts of other systems which require rigorous analysis

3.9.2.5.2 Analytical Methods

Loading Conditions and Stress Limits

The design loading combinations and the allowable stress limits considered in the design of TVA piping systems within the scope of Section 3.9.2.5.1 are shown in Table 3.9.2-4. Design loading combinations are categorized with respect to normal, upset, and faulted conditions.

Piping components have been designed to the ANSI B31.1-1967 power piping code utilizing the equations and rules from ASME Section III, Winter 1972 ADDENDA for loading combinations not defined in ANSI B31.1, and the allowable stress and material property values from Appendix I of the ASME Section III Winter 1972 ADDENDA.

While the ANSI B31.1 1967 code did not define allowable stress limits for some of the loading combinations considered in Table 3.9.2-4, the allowable stress levels are in basic agreement with Appendix I of the ASME Section III, Winter 1972 ADDENDA.

The rules and criteria of ANSI B31.1 1967 are considered to be equivalent to those of Section NC3000 of the ASME Section III, Winter 1972 ADDENDA with the appropriate additional consideration of the equation 9 requirements of the ASME Code.

Analyses

1. Stress evaluations due to loadings such as deadweight, thermal expansion, and anchor movements are performed using static analysis techniques, while stress evaluations due to earthquake loadings and other dynamic loads are performed using dynamic analysis techniques. The computer programming for application of both techniques is described in Section 3.9.2.5.3.

2. Loads on equipment nozzles are combined and evaluated against allowables established by the equipment vendor and/or TVA.

3. Seismic valve accelerations are generally maintained below 2 g vertical, and 3 g horizontal. Cases exist such that valve accelerations may exceed these standard limits. Such cases are evaluated and approved individually; this process is controlled by the Rigorous Analysis Handbook.

4. In general, safety-related valves at SQN were procured to reflect a minimum extended structure fundamental frequency of 25 Hz and, as such, are considered rigid. Under this approach, valve extended structures are modeled as rigid cantilevers in the piping dynamic simulation. A few cases exist such that valve extended structures do not satisfy the 25 Hz criteria. For these cases, extended structures are modeled as flexible cantilevers with appropriate consideration for inertial loading. Modifications to existing valves which affect fundamental frequency and dynamic response are evaluated on a case-by-case basis.

5. Pump casings are inherently rigid with regard to predominant structural frequency and, as such, provide a piping analysis boundary condition which closely approximates an anchor at the pump nozzles. Typically, this approach results in a conservative prediction of thermal expansion induced nozzle loads which are considered in combination with nozzle loads from seismic response. Calculated nozzle loads are evaluated against conservative allowables for all design basis loading conditions to ensure adequate pump qualification. This process is controlled by the Rigorous Analysis Handbook.

   In those few cases where pump assemblies have been found to be nonrigid (f <25 Hz), appropriate considerations were made with regard to piping and/or pump qualification. The only case which required a special analytical approach to achieve seismic qualification was documented by Nonconforming Condition Report 69D, dated September 16, 1977.

   The safety and reliability of pump and attached piping system designs are enhanced by TVA's preoperational testing and in-service surveillance/maintenance programs described in Sections 3.9.1.1, 6.8, and 14.1. These programs are intended to ensure that mechanical and fluid induced vibration levels are kept within acceptable limits for all system operating modes and that degradation mechanisms are appropriately addressed throughout the lifetime of the system.

6. Buried piping is analyzed as described in Section 3.7.3.12.

7. The analysis of the Unit 2 Feedwater (FW) piping due to the rapid FW check valve closure following a pipe break near the main feedwater header was performed utilizing linear elastic and non-linear plastic analyses based on Appendix F of Section III of the 1986 ASME Code. R. L. Gridley's letter to NRC dated February 18, 1988 provided notification of TVA's plan to qualify the FW piping according to Appendix F for faulted loads.

   The following is a summary of the Unit 2 analyses performed to demonstrate the structural integrity of the safety-related portion of the FW system during and following this postulated event:

   Thermohydraulic analyses using RELAP5 were performed to establish forcing functions for all four FW lines.

   Rigorous piping analyses were performed on two representative FW lines to calculate piping stresses and support loads due to the waterhammer event. The remaining two FW lines were qualified by similarity.

   Component qualification was performed for the steam generator nozzles, the steel containment vessel penetrations, the feedwater bellows, and the feedwater check valve.

   Structural analyses were performed to evaluate the loadings on the concrete walls, structural steel, and embedded plates.

   Some of the pipe supports were evaluated to ensure that their failure would not damage other safety-related components.

   These analyses show that some piping supports may fail, but that the piping itself would remain intact, with its deflection limited by the presence of the pipe whip restraints.

   Since the design of the Unit 1 FW lines are opposite hand to the Unit 2 FW lines, the Unit 1 FW lines are qualified on the basis of similarity between the two units.

8. For cases where TVA may have installed safety Class B small bore (two-inches and less) pipe and fittings in safety Class A applications, a 40 percent stress reduction was used in lieu of NDE (non-destructive examination) to assure plant safety. ANSI

B31.7c-1971, paragraph 1-724, provides for a reduction in allowable stress in lieu of NDE. The conditions described in B31.7, for which the 40 percent stress reduction is imposed, are identical to the conditions TVA is addressing. The 40 percent reduction is applied to the stress limits defined in Table 3.9.2-4.

3.9.2.5.3 Programs Used for Category I Piping Analyses

The following is a list of computer programs used for dynamic and/or static analysis of Category I, Class A, B, and C piping. Each program's scope, background, applicability, and method of validation is discussed in the program descriptions below:

Program Name	Application	Owner
PISOL1A	Dynamic	EDS/IMPELL
PISOL3A	Static	EDS/IMPELL
TPIPE	Static and Dynamic	TVA/PMB
PFA	Static	TVA
SUPERPIPE	Static and Dynamic	EDS/IMPELL
NUPIPE-SW	Static and Dynamic	Stone & Webster
ME101	Static and Dynamic	BECHTEL
ANSYS	Static, Dynamic, and Non-linear	Stone & Webster

1. PISOL1A--for the dynamic elastic analysis of piping systems subject to seismic excitation.

EDS Program (IMPELL) PISOL1A analyzes arbitrary, three-dimensional piping systems for seismic excitation using the dynamic analysis technique known as the response spectrum mode superposition method. In this technique, the earthquake excitation is characterized by acceleration response spectra, and the total response of the system is evaluated as a square root of the sum of the squares combination of the response of the significant natural modes of vibration of the system. Closely spaced modes can be combined using either the modified NRC 10 percent method or the modified NRC 10 percent grouping method. The results for earthquakes acting in both horizontal directions separately, each combined with vertical motion are computed, or alternatively, earthquakes acting in all three directions simultaneously may be computed.

A piping system is idealized as a mathematical model consisting of lumped masses connected by massless elastic members. The locations of the lumped masses are chosen to adequately represent the dynamic characteristics of the system. The direct stiffness method of structural analysis is used to form the system stiffness matrix, including stiffness modifications for curved components, and diagonal mass and damping matrices are assumed. The dynamic properties of the system (periods of vibration and normal mode shapes) are determined using the Householder-QA method, and the system response is then computed by the modal superposition procedure.

PISOL1A has been used for dynamic seismic piping analysis for more than 15 nuclear power plants and has been verified by independent analysis by the Bechtel Power Corporation of San Francisco for several of these plants. In addition, the program has been benchmarked by EDS (IMPELL) against the ASME Sample Problem No. 1 contained in ASME publication, "Pressure Vessel and Piping 1972, Computer Programs Verification," and the benchmark data has been submitted to the ASME. Typical plants for which the program has been used for dynamic seismic piping analysis include Donald C. Cook, Rancho Seco, Trojan, and Calvert Cliffs Unit 1.

2. PISOL3A--for the static elastic analysis of piping systems subject to static loading.

   EDS Program (IMPELL) PISOL3A analyzes arbitrary, three-dimensional piping systems subject to applied static loadings and displacements. The program is based on the direct stiffness method of structural analysis. A piping system is idealized as a mathematical model consisting of lumped weights connected by weightless elastic members. The location of the lumped weights is chosen to adequately represent the weight distribution of the system for dead load analysis. The direct stiffness method of structural analysis is used to form the stiffness matrix including stiffness modifications for curved components. The equations of equilibrium are solved to determine the system displacements, and hence member forces and moments for the applied loading and/or displacements, using a Gaussian reduction procedure.

   PISOL3A has been used for static piping analysis for more than 30 nuclear power plants. The program has been used for independent verification of the programs of the Bechtel Power Corporation of San Francisco for several plants, and was included on the Monticello docket. In addition, the program has been benchmarked by EDS (IMPELL) against other programs such as EDSGAP and MEL-40. Typical plants for which the program has been used for static piping analysis include Monticello, Donald C. Cook, Rancho Seco, Trojan, and Calvert Cliffs Unit 1.

3. TPIPE--for the linear elastic structural analysis of arbitrary, 3-dimensional piping systems subject to static and dynamic loadings. Analyses are performed to ASME requirements for Classes 1, 2, or 3 systems.

   A piping system is idealized as a mathematical model consisting of lumped weights connected by weightless elastic members. The locations of the lumped weights are chosen to adequately represent the dynamic characteristics of the system for dynamic considerations.

   The direct stiffness method of structural analysis is used to form the stiffness matrix, including stiffness modifications for curved components. Diagonal mass and damping matrices are assumed. The equations of equilibrium are solved to determine the system displacements, and hence member forces and moments for the applied loading and/or displacements, using a Gaussian elimination procedure.

TPIPE analyzes piping systems subject to applied static loading conditions using the method discussed in the preceding paragraph, however, the piping dead load analysis considers both distributed weight properties of the piping and any concentrated weights.

TPIPE analyzes piping systems for dynamic excitation using the analysis technique known as the response spectrum modal super- position method. A direct integration or modal super-position time history capability is also available. Seismic options include a multiple support zone capability. The dynamic properties of the system (periods of vibration and normal mode shapes) are determined using a modified subspace iteration technique, and the system response is then computed by the modal superposition procedure.

TPIPE has been benchmarked by TVA against the NRC program EPIPE in accordance with the Standard Review Plans, NUREG-0800, Section 3.9.1.II and NUREG/CR-1677. TPIPE is verified and maintained by TVA using formal software QA procedures.

4. PFA--for the elastic static analysis of piping systems subject to thermal and applied displacement loadings.

   Piping Flexibility Analysis Program, PFA, was bought from the Service Bureau Corporation by TVA. PFA analyzes arbitrary, 3-dimensional piping systems subject to thermal and displacement loadings. The program is based on the direct stiffness method of structural analysis. The results are modified by a postprocessor at points requiring "tee" stress intensification by multiplying the indicated stress by the stress intensification factor ratio.

   The usefulness of PFA is restricted by the program problem size limitation which is determined as follows:

   $$6 (A + L - 1) + R < 95$$

   A = Number of anchors

   L = Number of loops

   R = Number of restrained directions

   PFA is verified and maintained by TVA using formal software QA procedures.

5. SUPERPIPE - For linear elastic structural analyses of piping systems for static and dynamic loadings. Analyses are performed to ASME requirements for Classes 1, 2, and 3 systems.

The program has various features for user ease in defining the piping system. Various plotting capabilities and extensive diagnostic error and warning messages aid in checking the model.

In addition to the basic capabilities, SUPERPIPE offers the following specialized piping analysis specifications.

Analysis with response spectra for piping supported at multiple zones.

Modal superposition or direct integration techniques of time history analysis.

Analysis with multiple earthquake records for situations in which a piping system is subjected to independent motions at each support and the effect of phase relationships between these motions is important.

Static or dynamic equilibrium equations are formulated using the direct stiffness method, in which element stiffness matrixes are formed according to virtual work principles and assembled to form a global stiffness matrix for the system, relating external forces and moments to joint displacements and rotations. Six degrees of freedom may be specified at each joint of the global system for both static and dynamic analyses.

Static equilibrium equations are solved using Gaussian reduction techniques on the compacted stiffness matrix. For dynamic problems, the equilibrium equations may be solved using either step-by-step direct integration of the coupled equations of motion, or by first calculating natural frequencies and mode shapes and transforming the system into a set of uncoupled equations of motion. Natural frequencies and mode shapes are calculated using the determinant search technique.

The program has been thoroughly tested and verified for a comprehensive set of sample problems, including extensive comparison with several publicly-available programs and ASME benchmark problems. This has included benchmarking by EDS (IMPELL) against the ASME sample problems 1 and 6 contained in ASME publication, "Pressure Vessel and Piping 1972, Computer Program Verification." All verification analyses have been documented in accordance with established EDS (IMPELL) quality assurance procedures.

6. NUPIPE-SW - The NUPIPE-SW (SWEC 1982) piping program performs a linear elastic analysis of three-dimensional piping systems subjected to thermal, static, and dynamic loads. It utilizes the finite element method of analysis.

NUPIPE-SW handles all loading conditions required for complete nuclear piping analyses. A given piping configuration may be analyzed successively for a number of static and dynamic load conditions in a single computer run. Separate load cases, such as thermal expansion and anchor displacements, may be combined to form additional analysis cases. The piping deadload analysis considers both distributed weight properties of the piping and any added concentrated weights.

A lumped mass model of the system is used for all dynamic analysis, and both translational and rotational degrees of freedom may be considered. Location of lumped masses and degrees of freedom at each mass point are preselected by the analyst. The program automatically computes values of translational lumped masses.

Program input consists basically of program control, piping configuration description, and load specification information. Output includes certain computed system information and a listing of calculated forces, moments, deflections, and stresses for each individual load case. Output from seismic analyses includes system normal mode information. NUPIPE-SW output data also contains pipe stress and pipe support summaries and piping isometric plots. Output data of NUPIPE-SW can be saved on a separate tape for further analysis, if required.

The NUPIPE-SW program is designed to perform analysis in accordance with ASME Section III, Nuclear Power Plant Components (Code). Features ensuring code conformance include use of accepted analysis methods, incorporation of specified stress indices and flexibility factors, proper combination of moment resultants, and provision to generate (automatically) results of combined loading cases. A program option is available to specify among:

1. Class 1 analysis per Article NB-3600 of the Code,

2. Class 2 analysis per Article NB-3600 of the Code,

3. Analysis per ANSI B31.1.0 power piping code, and

4. Combined Class 1 and Class 2 analysis per Articles NB-3600 and NC-3600 of the Code.

NUPIPE-SW program has been verified with ADLPIPE (ADL 1972) for thermal, weight, and response spectrum seismic analysis.

Comparisons were also made with the ASME (1972) Benchmark solution for force time-history dynamic response.

The Class 1 pipe stresses computed by NUPIPE-SW agree with those calculated by hand.

NUPIPE-SW is verified and maintained by SWEC using formal software QA procedures.

7. ME101- (BECHTEL) is a finite element computer program to perform linear elastic response of piping systems. The input is simple and user friendly. It provides extensive data checking and automatic re-numbering of internal data points to optimize computer costs. The program includes all traditional piping stress options, such as static, thermal, weight, uniformly distributed loads, external loads, effective weight,

SAM analysis, dynamic and static seismic analysis with enveloped spectrum methodology. ME101 also includes the latest "state of the art" type analyses which are ISM (Independent Support Motion) or MRS (Multiple Response Spectrum) spectrum analysis, closely-spaced modes and modal coupling analysis using CQC and double sum methodologies, ISM time history analysis in the form of arbitrary support displacements or accelerations, force or pressure transient time-history analysis, ZPA analysis using static or missing mass correction, Bechtel's non-linear energy absorber analysis, direct integration time-history method considering non-linear kinematic hardening supports, harmonic and steady-state vibration analysis. The program can analyze and evaluate piping systems in accordance to the latest NRC Regulatory requirement of 1.61, 1.92, 1.48, and ASME code cases N-411 and N-420. The program provides a great flexibility in load combination, support/hanger guidance, stress check, and stress summary based on the ANSI B31.1 Power Piping Code and ASME Section III Nuclear Class 2 and 3 (including the latest 1983 code criteria). ME101 is verified and maintained by BECHTEL using formal software QA procedures.

8. ANSYS - The ANSYS computer program is a large-scale general purpose computer program (developed by Swanson Analysis Systems, Incorporated) for the solution of several classes of engineering analysis problems. ANSYS is capable of analyzing structures with static and dynamic loadings, elastic and plastic member properties, creep and swelling, buckling, and small and large deflections.

   The matrix displacement method of analysis based upon finite element idealization is employed throughout the program. This ANSYS version is verified and maintained by SWEC using formal software QA procedures.

3.9.2.5.4 Results of Piping Analyses

The analytical results of the piping system analyses performed in accordance with Section 3.9.2.5.2 are controlled by the Rigorous Analysis Handbook.

Figure 3.9.2-1 is representative of the mathematical models for the analyses of all TVA Class A piping systems defined in Section 3.9.2.5.1.

3.9.2.6 Field Run Piping

Field engineering personnel field route and support category I, TVA Class B, C, D, G, K, and M process piping and instrument lines that do not require complete analysis as defined in Section 3.9.2.5. These activities are based on input/direction from Engineering Design.

The field run piping design criteria is limited to piping components which meet the following conditions:

1. Materials

   a. Stainless steel equivalent to A312/358/376, Type 304/316.

b. Carbon steel equivalent to A106, Grade B or seamless A53, Grade B.

c. Aluminum equivalent to 6061T4 or 6061T6.

d. Copper tubing for water, air, or refrigerant service.

2. Stress intensity

Material allowable stress intensity at design temperature must be equal to or greater than 14,000 psi for steel and 5,700 psi for aluminum piping.

Copper tubing allowable stress intensity at design temperature must be equal to or greater than 6,000 psi for water or air service and 4,800 psi for refrigerant service.

3. Temperature Range Limits Considered For Steel Only

a. Sizes 3/8 through 1 inch - maximum of 650°F.

b. Sizes 1-1/4 through 4 inches - maximum of 200°F.

c. Sizes greater than 4 inches - require independent analysis.

4. Specific Exclusions

a. Piping requiring analysis under Section 3.9.2.5.

b. TVA Class A piping.

c. Piping classified as "High Energy."

d. Piping systems requiring analysis consideration of external or DBA loads.

e. Piping supporting large concentrated loads which are not independently supported.

3.9.2.7 Interim Acceptance Criteria

An interim acceptance criteria was used for temporary resolution of several critical engineering issues for the 1988 restart of Sequoyah Nuclear Plant (Phase I). The criteria involved minor deviations to the FSAR licensing commitments for alternate analysis.

Piping Criteria Exception: Secondary stresses resulting from seismic anchor movements (SAM) and thermal plus thermal anchor movements (TAM) were evaluated for piping systems greater than 200°F. For piping systems 200°F or less, secondary stresses resulting from SAM plus TAM were evaluated.

Pipe Support Criteria Exceptions:

1. Only safe-shutdown earthquake (SSE) seismic loads were evaluated; operating-basis earthquake (OBE) loads were not.

2. The effects of friction loads resulting from thermal growth were not considered in the reevaluation of existing supports.

3. The allowable loads for expansion anchor bolts were based on a minimum safety factor of 2.5 for wedge bolts and 2.8 for self- drilling anchors.

In addition, TVA has evaluated supports using Section 3.8.4 of the NRC Standard Review Plan 6 and Subsection NF of Section III of the ASME Code.

For rigorous analysis, additional restart criteria were developed to establish priorities for implementation of pipe support modifications. These restart criteria were presented in criteria document CEB-CI-21.89 (see TVA letters of August 31 and November 17, 1987(a)). The NRC staff approved the criteria with certain restrictions in a letter to TVA dated February 23, 1988. All supports satisfied the restart criteria before restart of Sequoyah.

3.9.3 NSSS Components Not Covered By ASME Code

3.9.3.1 Core and Internals Integrity Analysis (Mechanical Analysis)

The response of the reactor core and vessel internals under excitation produced by a simultaneous complete severance of a reactor coolant pipe and seismic excitation for a typical Westinghouse Pressurized Water Reactor (PWR) plant internals has been determined. The following mechanical functional performance requirements apply:

1. Following the design basis accident, the basic operational or functional requirement to be met for the reactor internals is that the plant will be shutdown and cooled in an orderly fashion so that fuel cladding temperature is kept within specified limits. This implies that the deformation of certain critical reactor internals must be kept sufficiently small to allow core cooling.

2. For large breaks, the reduction in water density greatly reduces the reactivity of the core, thereby shutting down the core whether the control rods are inserted or not. The subsequent refilling of the core by the Emergency Core Cooling System (ECCS) uses borated water to maintain the core in a subcritical state. Therefore, the main requirement is to assure effectiveness of the ECCS. Insertion of the control rods, although not needed, gives further assurance of ability to shut the plant down and maintain it in a safe shutdown condition.

3. The functional requirements for the Core Structures during the design basis accident are shown in Table 3.9.3-1. The inward upper barrel deflections are controlled to insure no contacting of the nearest rod cluster control guide tube. The outward upper barrel deflections are controlled in order to maintain an adequate annulus for the coolant between the vessel inner diameter and core barrel outer diameter.

4. The rod cluster control guide tube deflections are limited to insure operability of the control rods.

5. To insure no column loading of rod cluster control guide tubes, the upper core plate deflection is limited to the value shown in Table 3.9.3-1.

6. The reactor has mechanical provisions which are sufficient to maintain the design core and internals and to assure that the core is intact with acceptable heat transfer geometry following transients arising from the design basis accident operating conditions (References 1, 8, 13, and 17).

7. The core internals are designed to withstand mechanical loads arising from operating basis earthquake, safe shutdown earthquake and pipe ruptures (Reference 1, 2, 8, 9, 10, 13, and 17).

The following events are considered in the faulted conditions category:

1. Loads produced by a double ended pipe rupture of the main coolant loop design basis accident, for both cases: cold and hot leg break. The methods of analysis adopted are related to the type of accident assumed (cold leg break or hot leg break).

2. Response due to a safe shutdown earthquake.

3. Most unfavorable combination of safe shutdown earthquake and design basis accident. Maximum stresses obtained in each case are added in the most conservative manner.

Maximum stress intensities are compared to allowable stresses for each of the above conditions. When fatigue is of concern, the applicable stress concentration factors are utilized and peak stresses are used to establish the usage factor. Elastic analysis is utilized to obtain the response of the structure and the stress analysis on each component is performed on an elastic basis. For faulted conditions stresses are above yield in a few locations. For these cases only, when deformation requirements exist, a plastic analysis is independently performed to ensure that functional requirements are maintained (guide tubes deflections and core barrel expansion). The elastic limit allowable stresses are used to compare with the result of the analysis. No inelastic stress limits are used.

The above described analyses show that the stresses and deflections which would result following a faulted condition are less than those which would adversely affect the integrity of the structures. Also, the natural and applied frequencies are such that resonance problems will not occur.

3.9.3.2 Reactor Internals Response Under Blowdown and Seismic Excitation

A loss of coolant accident would result from a rupture of reactor coolant piping. During the blowdown of the coolant, critical components of the core are subjected to vertical and horizontal excitation as a result of rarefaction waves propagating inside the reactor vessel.

For these large breaks, the reduction in water density greatly reduces the reactivity of the core, thereby shutting down the core whether the control rods are inserted or not. The subsequent refilling of the core by the ECCS uses borated water to maintain the core in a subcritical state. Therefore, the main requirement is to assure effectiveness of the ECCS. Insertion of rod cluster control assemblies, although not needed, gives further assurance of ability to shut the plant down and maintain it in a safe shutdown condition.

The pressure waves generated within the reactor are highly dependent on the location and nature of the postulated pipe failure. In general, the more rapid the severance of the pipe, the more severe the imposed loadings on the components. A one millisecond severance time is taken as the limiting case.

In the case of the hot leg break, the vertical hydraulic forces produce an initial upward lift of the core. A rarefaction wave propagates through the reactor hot leg nozzle into the interior of the upper core barrel. Since the wave has not reached the flow annulus on the outside of the barrel, the upper barrel is subjected to an impulsive compressive wave. Thus, dynamic instability (buckling) or large deflections of the upper core barrel or both is the possible response of the barrel during hot leg blowdown. In addition to the above effects, the hot leg break results in transverse loading on the upper core components as the fluid exits the hot leg nozzle.

In the case of the cold leg break, a rarefaction wave propagates along a reactor inlet pipe arriving first at the core barrel at the inlet nozzle of the broken loop. The upper barrel is then subjected to a non-axisymmetric expansion radial impulse which changes as the rarefaction wave propagates both around the barrel and down the outer flow annulus between vessel and barrel. After the cold leg break, the initial steady state hydraulic lift forces (upward) decrease rapidly (within a few milliseconds) and then increase in the downward direction. These cause the reactor core and lower support structure to move initially downward.

If a simultaneous seismic event with the intensity of the safe shutdown earthquake is postulated with the loss of coolant accident, the imposed loading on the internals component may be additive in certain cases and therefore the combined loading must be considered.

In general, however, the loading imposed by the earthquake is small compared to the blowdown loading.

3.9.3.3 Acceptance Criteria

The criteria for acceptability in regard to mechanical integrity analyses is that adequate core cooling and core shutdown must be assured. This implies that the deformation of the reactor internals must be sufficiently small so that the geometry remains substantially intact. Consequently, the limitations established on the internals are concerned principally with the maximum allowable deflections and stability of the parts in addition to a stress criterion to assure integrity of the components.

Allowable Deflection and Stability Criteria

For the loss of coolant plus the safe shutdown earthquake condition, deflections of critical internal structures are limited to the values given in Table 3.9.3-1. In a hypothesized downward vertical displacement of the internals, energy absorbing devices limit the displacement to 1.25 inches by contacting the vessel bottom head.

Upper Barrel

The upper barrel deformation has the following limits:

1. To insure a shutdown and cooldown of the core during blowdown, the basic requirement is a limitation on the outward deflection of the barrel at the locations of the inlet nozzles connected to the unbroken lines. A large outward deflection of the barrel in front of the inlet nozzles, accompanied with permanent strains, could close the inlet area and stop the cooling water coming from the accumulators. Consequently a permanent barrel deflection in front of the unbroken inlet nozzles larger than a certain limit, called the "no loss of function" limit, could impair the efficiency of the Emergency Core Cooling System.

2. To assure rod insertion and to avoid disturbing the control rod cluster guide structure, the barrel should not interfere with the guide tubes. This condition also requires a stability check to assure that the barrel will not buckle under the accident loads.

Control Rod Cluster Guide Tubes

The guide tubes in the upper core support package house the control rods. The deflection limits were established from tests and are provided in Table 3.9.3-1.

Fuel Assembly

The limitations for this case are related to the stability of the thimbles in the upper end. The upper end of the thimbles must not experience stresses above the allowable dynamic compressive stresses. Any buckling of the upper end of the thimbles must not experience stresses above the allowable dynamic compressive stresses. Any buckling of the upper end of the thimbles due to axial compression could distort the guide line and thereby affect the free fall of the control rod.

Upper Package

The local vertical deformation of the upper core plate, where a guide tube is located, will be below 0.100 inch. This deformation will not cause the plate to contact the guide tube since the clearance between plate and guide tube is 0.100 inch. This limit will prevent the guide tubes from undergoing compression. For a plate local deformation of 0.150 inches, the guide tube will be compressed and deformed transversely to the upper limit previously established; consequently, the value of 0.150 inch is adopted as the no loss of function local deformation, with an allowable limit of 0.100 inch. These limits are given in Table 3.9.3-1.

Allowable Stress Criteria

The allowable stress limits during the design basis accident used for the core support structures are based on the limits specified in Section 4.2.2.5. This section defines various criteria based upon their corresponding method of analysis. To account for multi-axial stresses, the von Mises theory is also considered.

3.9.3.4 Methods of Analysis

The internals structures are analyzed for loads corresponding to normal, upset, emergency and faulted conditions. The analysis performed depends on the mode of operation under consideration.

The scope of the stress analysis problem is very large requiring many different techniques and methods, both static and dynamic. The more important and relevant methods are presented as an overview in Subsection 3.9.1 and summarized in the following.

3.9.3.5 Blowdown Forces Due to Cold and Hot Leg Break

A blowdown digital computer program (Reference 11) which is developed for the purpose of calculating local fluid pressure, flow, and density transients that occur in Pressurized Water Reactor coolant systems during a loss of coolant accident, is applied to the subcooled, transition, and saturated two-phase blowdown regimes. This is in contrast to programs such as WHAM (Reference 9) which are applicable only to the subcooled region and which, due to their method of solution, could not be extended into the region in which large changes in the sonic velocities and fluid densities take place. This blowdown code is based on the method of characteristics wherein the resulting set of ordinary differential equations, obtained from the laws of conservation of mass, momentum, and energy, are solved numerically using a fixed mesh in both space and time.

Although spatially one dimensional conservation laws are employed, the code can be applied to describe three dimensional system geometries by use of the equivalent piping networks. Such piping networks may contain any number of pipes or channels of various diameters, dead ends, branches (with up to six pipes connected to each branch), contractions, expansions, orifices, pumps, and free surfaces (such as in the pressurizer). System losses such as friction, contraction, expansion, etc. are considered.

Predictions from this code have been connected with numerous test data (Reference 12) and the results show good agreement in both the subcooled and the saturated blowdown regimes.

FORCE Model for Blowdown

The blowdown code evaluates the pressure and velocity transients for a maximum of 2400 locations throughout the system. These pressure and velocity transients are stored as a permanent tape file and are made available to the program FORCE (Reference 1) which utilizes a detailed geometric description in evaluating the loadings on the reactor internals.

Each reactor component for which FORCE calculations are required is designated as an element and assigned on element number. Forces acting upon each of the elements are calculated summing the effects of:

1. The pressure differential across the element.

2. Flow stagnation on, and unrecovered orifice losses across the element.

3. Friction losses along the element.

Input to the code, in addition to the blowdown pressure and velocity transients, includes the effective area of each element on which the force acts due to the pressure differential across the element, a coefficient to account for flow stagnation and unrecovered orifice losses, and the total area of the element along which the shear forces act.

The mechanical analysis has been performed using conservative assumptions in order to obtain results with extra margin. Some of the most significant are:

1. The mechanical and hydraulic analysis has been performed separately without including the effect of the water-solid interaction. Peak pressures obtained from the hydraulic analysis will be attentuated by the deformation of the structures.

2. When applying the hydraulic forces, no credit is taken for the stiffening effect of the fluid environment which will reduce the deflections and stresses in the structure.

3. The multi-mass model described below is considered to have a sufficient number of degrees of freedom to represent the most important modes of vibration in the vertical direction. This model is conservative in the sense that further mass-spring resolution of the system would lead to further attentuation of the shock effects obtained with the present model.

Vertical Excitation Model for Blowdown

For the vertical excitation, the reactor internals are represented by a multi-mass system connected with springs and dashpots simulating the elastic response and the viscous damping of the components. Also incorporated in the multi-mass system is a representative of the motion of the fuel elements relative to the fuel assembly grids. The fuel elements in the fuel assemblies are kept in position by friction forces originating from the preloaded fuel assembly grid fingers. Coulomb type friction is assumed in the event that sliding between the rods and the grid fingers occurs. A spring-mass system is used to represent the internals. In order to obtain an accurate simulation of the reactor internals response, the effects of internal damping, clearances between various internals, snubbing action caused by solid impact, Coulomb friction induced by fuel rods motion relative to the grids, and preloads in hold down springs have been incorporated in the analytical model. The modeling is conducted in such a way that uniform masses are lumped into easily identifiable discrete masses while elastic elements are represented by springs.

The appropriate dynamic differential equations for the multi-mass model describing the aforementioned phenomena are formulated and the results obtained using a digital computer program (Reference 13) which computes the response of the multi-mass model when excited by a set of time dependent forcing functions. The appropriate forcing functions are applied simultaneously and independently to each of the masses in the system. The results from the program give the forces, displacements and deflections as functions of time for all the reactor internals components (lumped masses). Reactor internals response to both hot and cold leg pipe ruptures is analyzed. The forcing functions used in the study are obtained from hydraulic analyses of the pressure and flow distribution around the entire Reactor Coolant System as caused by double ended severance of a Reactor Coolant System pipe.

Transverse Excitation Model for Blowdown

Various reactor internal components are subjected to transverse excitation during blowdown. Specifically, the barrel, guide tubes, and upper support columns are analyzed to determine their response to this excitation.

Core Barrel

For the hydraulic analysis of the pressure transients during hot leg blowdown, the maximum pressure drop across the barrel is a uniform radial compressive impulse. The barrel is then analyzed for dynamic buckling using these conditions and the following conservative assumptions:

1. The effect of the fluid environment is neglected (water stiffening is not considered);

2. The shell is treated as simply supported.

During cold leg blowdown, the upper barrel is subjected to a non-axisymmetric expansion radial impulse which changes as the rarefaction wave propagates both around the barrel and down the outer flow annulus between vessel and barrel.

The analysis of transverse barrel response to cold leg blowdown is performed as follows:

1. The upper core barrel is treated as a simply supported cylindrical shell of constant thickness between the upper flange weldment and the lower core barrel weldment without taking credit for the supports at the barrel midspan offered by the outlet nozzles. This assumption leads to conservative deflection estimates of the upper core barrel.

2. The upper core barrel is analyzed as a shell with four variable sections to model the support flange, upper barrel, reduced weld section, and a portion of the lower core barrel.

3. The barrel with the core and thermal shielding pads, is analyzed as a beam fixed at the top and elastically supported at the lower radial support and the dynamic response is obtained.

Guide Tubes

The dynamic loads on rod cluster control guide tubes are more severe for a loss of coolant accident caused by hot leg rupture than for an accident by cold leg rupture since the cold leg break leads to much smaller changes in the transverse coolant flow over the rod cluster control guide tubes. Thus, the analysis is performed only for a hot leg blowdown.

The guide tubes in closest proximity to the ruptured outlet nozzle are the most severely loaded. The transverse guide tube forces during the hot leg blowdown decrease with increased distance from the ruptured nozzle location.

A detailed structural analysis of the rod cluster control guide tubes was performed to establish the equivalent cross section properties and elastic end support conditions. An analytical model was verified both dynamically and statically by subjecting the control (Reference 13) rod cluster guide tube to a concentrated force applied at the transition plate. In addition, the guide tube was loaded experimentally using a triangular distribution to conservatively approximate the hydraulic loading. The experimental results consisted of a load deflection curve for the rod cluster control guide tube plus verification of the deflection criteria to assure rod cluster control insertion.

The response of the guide tubes to the transient loading due to blowdown may be found by utilizing the equivalent single degree freedom system for the guide tube using experimental results for equivalent stiffness and natural frequency.

The time dependence of the hydraulic transient loading has the form of a step function with constant slope front with a rise time to peak force of the same order of the guide tube fundamental period in water. The dynamic amplification factor in determining the response is a function of the ramp impulse rise time divided by the period of the structure.

Upper Support Columns

Upper support columns located close to the broken nozzle during hot leg break will be subjected to transverse loads due to cross flow.

The loads applied to the columns were computed with a similar method to the one used for the guide tubes; i.e., taking into consideration the increase in flow across the column during the accident. The columns were studied as beams with variable section and the resulting stresses were obtained using the reduced section modulus at the slotted portions.

3.9.3.6 Methods and Results of Blowdown Analysis (Mechanical)

The results obtained from the linear analysis indicate that during blowdown, the relative displacement between the components will close the gaps and consequently the structures will impinge on each other, making the linear analysis unrealistic and forcing the application of non-linear methods to study the problem. Although linear analysis will not provide information

about the impact forces generated when components impinge each other, it can, and is, applied prior to gap closure. The effects of the gaps that could exist between vessel and barrel, between fuel assemblies, between fuel assemblies and baffle plates, and between the control rods and their guide paths are considered in the analysis. References 1, 13, and 17 provide further details of the blowdown method used in the analysis of the reactor internals.

Results of these analyses indicate that both static and dynamic stress intensities are within acceptable limits. In addition, the cumulative fatigue usage factor is also within the allowable usage factor of unity.

The stresses due to the safe shutdown earthquake (vertical and horizontal components) are combined in the most unfavorable manner with the blowdown stresses in order to obtain the largest principal stress and deflection.

These results indicate that the maximum deflections and stress in the critical structures are below the established allowable limits. For the transverse excitation, it is shown that the upper barrel does not buckle during a hot leg break and that it has an allowable stress distribution during a cold leg break.

Even though control rod insertion is not required for plant shutdown, this analysis shows that most of the guide tubes will deform within the limits established experimentally to assure control rod insertion. These limits are shown in Table 3.9.3-1. For the guide tubes deflected above the no loss of function limit, it must be assumed that the rods will not drop. However, the core will still shutdown due to the negative reactivity insertion in the form of core voiding. Shutdown will be aided by the great majority of rods that do drop. Seismic deflections of the guide tubes are generally negligible by comparison with the no loss of function limit of Table 3.9.3-1.

3.9.3.7 Control Rod Drive Mechanisms

The control rod drive mechanisms are Class A components designed to meet the stresses of the ASME Boiler and Pressure Vessel Code and are presented in Section 4.2.

3.9.3.8 Evaluation of Reactor Internals for Limited Displacement RPV Inlet and Outlet Nozzle Breaks

This section contains an evaluation of the effects of a limited displacement 144 in^2 RPV inlet nozzle safe end break and a limited displacement 144 in^2 RPV outlet nozzle safe end break on the reactor internals. Both breaks are assumed to have a break opening time of one millisecond.

The main operational requirement to be met is that the plant be shutdown and cooled down in an orderly fashion so that the fuel cladding temperature is kept within the specified limits. This implies that the deformation of the reactor internals must be kept sufficiently small to allow core cooling and assure effectiveness of the ECCS. As a further criterion, the allowable stress criteria used for the core support structures are presented in Section 3.9.3.3.

The evaluation of the reactor internals for the RPV inlet break is composed of two parts. The first part is the in-plane response of the core barrel occurring in the vertical plane passing through the broken inlet nozzle. This is taken from the DARI-WOSTAS response similar to the RPV support analysis as described in Section 5.2.1.7. The second part of this evaluation is the core-barrel shell response which consists of the various n = 0, 2, 3 etc., ring mode responses occurring in the horizontal plane. These ring mode responses are generated as the inlet break rarefaction wave propagates to the core barrel at the inlet nozzle, which subjects the upper barrel to a non-axisymmetric expansion radial impulse which changes as the rarefaction wave propagates both around the barrel and down the outer flow annulus between the barrel and the vessel. This second part, or ring mode evaluation is described in Reference 9 and is independent of the loop forces and cavity pressure.

From the moment and shear force time histories resulting from the DARI-WOSTAS response, the core barrel beam bending stresses and shear stresses are obtained. The barrel beam stresses (the first part of the evaluation) are evaluated at the mid-barrel girth weld where the highest stresses in the barrel occur.

For the second part or shell mode analysis of the core barrel, the differential pressures across the core barrel wall distributed around the circumference must be determined. These differential pressures are directly obtained from the blowdown analysis. The application of the differential pressures around the barrel circumference (i.e., resolving into Fourier components, etc.) is further described in Reference 7. It is important to note, that unlike the beam analysis, the shell response of the barrel (the various horizontal ring modes 0, 2, 3, 4, etc.) is independent of the response of the vessel on its supports, the response of the fuel, or any combination of these beam mode responses. Even though there are various phenomena which may affect vessel beam behavior, there is only one set of barrel shell results to be included in the stress combination. Also included in the stress results for the barrel is the vertical response from the DARI-WOSTAS analysis. The vertical response of the barrel is considered uniform around the circumference. However, since the DARI-WOSTAS model couples the horizontal beam and the vertical response of the reactor at the vessel supports, variation in horizontal response may be seen in the vertical behavior.

To properly evaluate the total stress results in the core barrel, the combination of the horizontal beam, vertical, and shell modes is performed on a time-history basis. This combination is performed at the girth weld, which is the most highly stressed region of the core barrel.

The evaluation of the reactor internals for the RPV outlet nozzle break involves primarily three internal components: core barrel, control rod guide tubes, and upper support columns. The rarefaction wave, which is independent of the loop loads and cavity pressure, propagates into the upper plenum from the outlet nozzle break, which subjects the upper core barrel to a uniform radial compressive impulse resulting from the pressure drop across the core barrel. The stability of the barrel is checked to ensure that buckling due to the compressive impulse does not occur. The beam response (including the vertical response of the barrel) and shell mode response are considered in the analysis. The maximum deflections calculated for the core barrel are within the allowable limits established in Section 3.9.3.3.

Also included in the outlet nozzle break analysis is an evaluation of the control rod guide tubes and upper support columns. The guide tubes and support columns (primarily those close to the broken hot leg nozzle) are subjected to transverse loads due to increased cross flow in the upper plenum. These loads are independent of the loop loads and cavity pressure loads. The analysis results indicate that the deflections are within the allowable limits presented in Section 3.9.3.3 and therefore, the internals geometry is maintained and significant control rod insertion is not impaired.

3.9.4 Additional Support Requirements

3.9.4.1 Support Welds

Supplemental steel and supports not governed by B31.1 were welded in accordance with the American Welding Society, "Structural Welding Code," AWS D1.1-72 as implemented by TVA General Construction Specification G-29C. NCIG-01, Revision 2, may be used after June 26, 1985, to evaluate weldments that were designed and fabricated to the requirements of AISC/AWS. When invoked, NCIG provisions will be implemented as indicated in section 3.6.8.

3.9.4.2 Allowable Loads for U-bolts and Unistrut Type Clamps

The basic allowables for U-bolts and Unistrut type clamps have been established by tests with the results evaluated in accordance with ASME section III 1974, Subsection NF, including 1974 winter addenda. The load ratings envelope low bound test results and were further limited by a 1/8" deflection criteria.

3.9.5 References

1. G. J. Bohm, Indian Point Unit No. 2 Internals Mechanical Analysis for Blowdown Excitation, WCAP-7822, Westinghouse Electric Corporation (December 1971), (Non-Proprietary).

2. B. E. Olsen, et al., Indian Point No. 2 Primary Loop Vibration Test Program, WCAP-7920, Westinghouse Electric Corporation.

3. Qualification of Westinghouse Seismic Testing Procedure for Electrical Equipment Tested Prior to May 1974, WCAP-8373, Westinghouse Electric Corporation.

4. Seismic Vibration Testing with Sine Beats, WCAP-7558, Westinghouse Electric Corporation (October 1971).

5. C. N. Bloyd and N. R. Singleton, UHI Plant Internals Vibration Measurement Program and Pre- and Post-Hot Functional Examinations, WCAP-8516 proprietary and WCAP-8517 non-proprietary, Westinghouse Electric Corporation (March 1975).

6. D. A. Altman et al., Verification of Upper Head Injection Reactor Vessel Internals by Pre-Operational Tests on Sequoyah 1 Power Plant, WCAP-9645 proprietary and WCAP-9646 non-proprietary, Westinghouse Electric Corporation (March 1981).

7. J. S. Moore, Westinghouse PWR Core Behavior Following a Loss-of-Coolant Accident, WCAP-7422-L, Westinghouse Electric Corporation (January 1970).

8. G. J. Bohm and J. P. Lafaille, Reactor Internals Response Under a Blowdown Accident, First Int'l. Conf. on Structural Mech. in Reactor Tech., Berlin (September 20-24, 1971).

9. S. Fabic, Computer Program WHAM for Calculation of Pressure Velocity, and Force Transients in Liquid Filled Piping Networks, Kaiser Engineers Report No. 67-49-R (November 1967).

10. L. T. Gesinski, Fuel Assembly Safety Analysis for Combined Seismic and Loss-of-Coolant Accident, WCAP-7950, Westinghouse Electric Corporation (July 1972).

11. S. Fabic, Description of the BLODWN-2 Computer Code , WCAP-7918, Revision 1, Westinghouse Electric Corporation (October 1970).

12. S. Fabic, Loss-of-Coolant Analysis: Comparison Between BLODWN-2 Code Results and Test Data, WCAP-7401, Westinghouse Electric Corporation (November 1969).

13. G. J. Bohm, et al., Topical Report - Indian Point Unit No. 2 Reactor Internals Mechanical Analysis for Blowdown Excitation, (Proprietary), WCAP-7332-L-AR, Westinghouse Electric Corporation (November 1973).

14. Letter from NRC to TVA dated October 29, 1987 (A02 87 1105 014).

15. Supplement No. 1 To The Safety Evaluation Report NUREG-0011, Section 3.10.3.

16. Letter from TVA to NRC responding to URI-88-12-08, dated July 27, 1990 (L44 90 0727 801).

17. BAW-10172P, Mark-BW Mechanical Design Report, July 1988.

18. TVA SQN Design Criteria No. SQN-DC-V-24.2, Supports For Rigorously and Alternately Analyzed Category I Piping.

TABLE 3.9.2-1

CODES AND OTHER CRITERIA GOVERNING THE ANALYSIS OF TVA CLASS B, C, AND D COMPONENTS[1]

LOADCASE	VESSEL/TANKS	PUMPS		VALVES		PIPING[3]
NORMAL	ASME III/ ASME VIII/ NOZZLE and Mounting Load Limits	ASME III/Performance Testing in accordance with standards of the Hydraulic Institute Procedures/Nozzle and Mounting Load Limits		ASME III/ANSI B16.5/ Nozzle Load Limits		Code is given in Section 3.9.2.5.2
UPSET AND FAULTED (Not Pipe Rupture)	ASME III/ ASME VIII/ Nozzle, Mounting, and Inertial Loads Limits	Structural ASME III/ Nozzle, Mounting, and Inertial Load Limits	Functional [2][4] Rigid (fn≥25), Functional Stress and Load Limits	Structural ASME III/ Nozzle and Inertial Load Limits	Functional[2][4] Rigid (FN≥25), /Functional Stress and Load Limits	
FAULTED (Pipe Rupture)	See Section 3.6 for Pipe Rupture Criteria					

(1) Suitable tests subject to review may be substituted for analysis, however, the applicable ASME Code stress allowables must be satisfied. The applicable code edition for a component is generally defined by the date of procurement as described in Section 3.2, Table 3.2.2-1. With this consideration, qualification for seismic and DBA inertial loads may be accomplished by analysis or test in accordance with the guidelines of IEEE 344-71 or IEEE 344-75. IEEE 344-75 is used to the extent practical for procurements after September 1, 1974.

(2) Functional design requirements apply only to active components whose functionality is relied upon to perform a safety function (as well as reactor shutdown function) during the transients or events considered in the respective operating categories.

(3) Governs the analysis of Class A, B, C, and D piping analyzed by TVA.

(4) Exceptions to the natural frequency requirements may be approved on a case-by-case basis.

Table 3.9.2-2

DESIGN LOADING COMBINATIONS
FOR GROUP CLASSES B, C, AND D COMPONENTS

	Loading Cases	Operating Condition
a.	Pressure + deadweight + thermal + other sustained loads	Normal
b.	Pressure + deadweight + thermal + other sustained loads + valve thrust + fluid transients + OBE	Upset
c.	Pressure + deadweight + thermal + other sustained loads + valve thrust + fluid transients + SSE + DBA SCV inertia and displacement	Faulted
d.	Pressure + deadweight + other sustained loads + valve thrust + fluid transients + pipe rupture	Faulted

NOTES:

1. Loads which are not concurrent need not be combined.

2. Other sustained loads include mechanical loads, the weight of contained fluids, pressure blowoff loads due to untied bellows, and similar sustained effects.

3. Pipe rupture evaluations are conducted separately as described in Section 3.6.

4. The DBA steel containment vessel (SCV) loads consist of dynamic movements at the initiation of the DBA event and later thermal expansion displacements of the SCV in the post DBA event phase.

5. Many component loads result from component/piping and component/ mounting interfaces. The corresponding load combinations and allowable stresses for interfacing piping and supports (including component supports) are defined in Tables 3.9.2-4 and 3.9.2-5, respectively. Component qualification codes, interface limits, and allowable stresses are defined in Tables 3.9.2-1 and 3.9.2-3.

Table 3.9.2-3
SAFETY CLASS B, C, AND D
COMPONENT LOADING CONDITIONS AND STRESS LIMITS[1,3]

Plant Loading Condition	Pressure Vessels and Storage Tanks	Pumps	Valves	Containment Penetrations (Nozzles)
Normal	Primary General Membrane Stress Intensity[2] $\leq S_m$ Primary + Secondary Stress Intensity[2] $\leq 3\ S_m$	ASME III Draft for Pumps and Valves. Performance testing in accordance with standards of the Hydraulic institute Procedures	ASME III, 1968/ ANSI B16.5 and B16.34 Ratings	ASME, Section III, 1971 Edition, Subsection NE
Upset	Primary General Membrane Stress Intensity[2] $\leq 1.1\ S_m$ Primary + Secondary Stress Intensity[2] $\leq 3\ S_m$	Structural and functional integrity is ensured by satisfaction of limits identified in Table 3.9.2-1. Pumps and valves are supported to assure each component is not seismically loaded in excess of the "g" loading specified in the design specification. Pumps and valves have been demonstrated to be rigid ($f_n \geq 25$ Hz). Higher accelerations and lower natural frequencies may be approved on a case-by-case basis.		ASME, Section III, 1971 Edition, Subsection NE
Emergency	N/A			ASME, Section III, 1971 Edition, Subsection NE
Faulted	Primary General Membrane Stress Intensity[2] $\leq 1.2\ S_m$ or S_y Buckling check required Secondary stresses need not be evaluated			N/A

S_m = ASME Section III, 1968, or later, Edition Code allowable stress intensity at design or operating temperature.

NA = No loading condition assigned.
S_y = Yield stress at design or operating temperature.

1 Allowable stress limits from the 1968 or later editions of the ASME Section III code subsections, which are applicable to the type of component and approved by the NRC in accordance with 10 CFR 50.55a, may be used provided that all associated provisions of that code edition are satisfied.
2 Primary local membrane plus bending allowables are 1.5 times the primary general membrane allowables.
3. Stress limits used for new design, modification, and evaluation after September 1, 1974 are identified by Table 3.9.2-3A.

Table 3.9.2-3a
SAFETY CLASS B, C, AND D COMPONENT LOADING CONDITIONS AND STRESS LIMITS FOR NEW DESIGN, MODIFICATION, AND EVALUATION AFTER SEPTEMBER 1, 1974

Plant Loading Condition	Tanks and Vessels [1, 2, 3, 5, 6]	Pumps [1, 2, 4, 5]	Valves [1, 2, 4, 5]
Normal (Service Level A)	Design Stress Limits from applicable ASME Section III Subsections NC/ND-3200, -3300, -3800, or -3900. Vendor-designed support stresses limited to normal AISC allowable.	Design Stress Limits from ASME Section III Subsections NC/ND-3400. Vendor-designed support stresses limited to normal AISC allowable.	Design Stress Limits from ASME Section III Subsections NC/ND-3500. Extended structure stresses limited to normal AISC allowable.
Upset and Faulted (Service Levels B and D)	Stress Limits from applicable ASME Section III Subsections NC/ND-3200, -3300, -3800, or -3900, and ASME Code Cases 1607-1 and 1657-1. Vendor-designed support stresses limited to 1.33 times normal AISC allowable. Additional shell buckling stress limits for low pressure, thin-wall tanks and vessels.	Stress Limits from ASME Section III Subsections NC/ND-3400 and ASME Code Case 1636-1. Vendor-designed support stresses limited to 1.33 times normal AISC allowable. Additional stress and functionality/operability limits for Active Pumps.	Stress Limits from ASME Section III Subsections NC/ND-3500 and ASME Code Case 1635-1. Extended structure stresses limited to 1.33 times normal AISC allowable. Additional stress and functionality/operability limits for Active Valves.

Notes:
1. ASME Code Cases 1607-1, 1635-1, 1636-1, and 1657-1 were issued in 1974 and incorporated in ASME Section III 1977 Edition.
2. Basic pressure boundary stress limits are consistent with the ASME Section III Code 1971 Edition with Addenda through Summer 1973 or the applicable code edition identified in the component design/procurement specification. Any conflict identified between these two alternatives is resolved in a conservative manner. Stress limits from later ASME Section III codes approved by the NRC according to 10CFR 50.55e may be utilized provided all of the provisions of that code are satisfied for the component.
3. An alternate approach is permitted for existing ASME Section III and Section VIII Code Tanks and Vessels that were designed and fabricated to the 1968 or 1971 Code Edition. By this alternate approach, design stress limits are met and pressure boundary stresses for faulted loading conditions are limited to 1.2 times the design primary stress limits.
4. An alternate approach is also permitted for existing Pumps and Valves that were procured prior to September 1, 1974. By this alternate approach, design stress limits are met and pressure boundary stresses for faulted conditions are limited to 1.2 times the design primary stress limits.
5. AISC stress limits are consistent with the AISC Manual of Steel Construction Edition identified in the component design/procurement specification or used by the vendor for design and fabrication.
6. Steel Containment Vessel loading conditions and allowable stresses are described in Section 3.8.2.3.2, Table 3.8.2-1, and Table 3.8.2-2.

Table 3.9.2-4

LOADING COMBINATIONS AND STRESS LIMITS
FOR SAFETY CLASS B, C, AND D PIPING (Sheet 1)

Plant Condition	Load Combinations	Stress Limits	NC-3652 Equation	Notes
Normal	Pressure + Deadweight + Other Sustained Loads	S_h	8	1, 6
Normal or Upset	Thermal + OBE SAM	S_A	10	1, 2, 3 6
Normal or Upset	Pressure + Deadweight + Other Sustained Loads + Thermal + OBE SAM	$S_A + S_h$	11	1, 2, 3 6
Upset	Pressure + Deadweight + Other Sustained Loads + OBE Inertia + Valve Thrust + Fluid Transients	$1.2\ S_h$	9U	1, 3, 6,7
Faulted	Pressure + Deadweight + Other Sustained Loads + SSE Inertia + Valve Thrust + Fluid Transients + DBA Inertia	$2.4\ S_h$	9F	1, 6,7
Faulted	Pressure + Deadweight + Other Sustained Loads + Valve Thrust + Fluid Transients + DBA Inertia + Pipe Rupture	$2.4\ S_h$	9F	1, 4, 6,7
Faulted	DBA SCV Inertia Movement + SSE SAM	$3.0\ S_c$	10A	1, 5, 6
Faulted	Post DBA SCV Movement + SSE SAM	$3.0\ S_c$	10A	1, 5, 6

Table 3.9.2-4

LOADING COMBINATIONS AND STRESS LIMITS
FOR SAFETY CLASS B, C, AND D PIPING (Sheet 2)

NOTES

1. Loads which are not concurrent need not be combined.

2. The requirements of either equation 10 or equation 11 must be met.

3. The effects of OBE Seismic Anchor Movements may be excluded from equations 10 and 11 if they are included in equation 9U.

4. Pipe rupture (i.e., jet impingement, etc.) is not considered in equation 9F unless required by the evaluation methods given in Section 3.6.

5. The DBA Steel Containment Vessel (SCV) inertia movements are dynamic movements of SCV during the DBA. The post DBA SCV movements are the containment pressure and temperature anchor movements of the SCV following a DBA. Effective 03-06-90, piping analysis containing the DBA event will utilize SCV inertia and displacement data which has incorporated the effects of LBB technology.

6. This table is also applicable for Class A piping (reactor coolant loop branch lines) analyzed by TVA.

7. Dynamic loads may be combined by the square root of the sum of the squares (SRSS) method if the time-phase relationship between the dynamic loading events is such that the maximum stresses resulting from the events are not postulated to occur at the same time. The guidelines provided in NUREG-0484 will be used to determine when the SRSS combination method is applicable.

Table 3.9.2-5 (Sheet 1)

LOADING COMBINATIONS AND STRESS/LOADING LIMITS FOR SAFETY CLASS B, C, AND D SUPPORTS

Plant Condition	Load Combination	Linear Support*	Standard Support Components	Snubber Pre-NF Hydraulic	Snubber Pre-NF Mechanical	Snubber NF Mechanical	Notes
Normal	Deadweight + Other Sustained Loads + Thermal	$1.0S_{AISC}$	$1.0S_{58}$				1, 2, 3
Upset	Deadweight + Other Sustained Loads + Thermal + OBE SAM + OBE Inertia + Valve Thrust + Fluid Transients	$1.33S_{AISC}$	$1.2S_{58}$	$1.0S_{58}$	$1.0S_{58}$	LCDS	1,2,3,5
Faulted (Case 1)	Deadweight + Other Sustained Loads + Thermal + SSE SAM + SSE Inertia + Valve Thrust + Fluid Transients + DBA	$1.5S_{AISC}$	$2.0S_{58}$	$1.2S_{58}$	$1.33S_{58}$	LCDS	1,2,3,5
Faulted (Case 2)	Deadweight + Other Sustained Loads + Thermal + Valve Thrust + Fluid Transients + DBA + Pipe Rupture	$1.5S_{AISC}$	$2.0S_{58}$	$1.2S_{58}$	$1.33S_{58}$	LCDS	1,2,3 4,5,7

Table 3.9.2-5 (Sheet 2)

LOADING COMBINATIONS AND STRESS/LOADING LIMITS FOR SAFETY CLASS B, C, AND D SUPPORTS

Plant Condition	Load Combination	Linear Support*	Standard Support Components	Snubber Pre-NF Hydraulic	Snubber Pre-NF Mechanical	Snubber NF Mechanical	Notes
Faulted** (Case 3)	Deadweight + Other Sustained Loads + Thermal + SSE SAM + SSE Inertia + Valve Thrust + Fluid Transients	$1.33S_{AISC}$	$2.0S_{58}$	$1.2S_{58}$	$1.33S_{58}$	LCDS	1,2,3,6
Faulted** (Case 4)	Deadweight + Other Sustained Loads + Thermal + Valve Thrust + Fluid Transients + Pipe Rupture	$1.33S_{AISC}$	$2.0S_{58}$	$1.2S_{58}$	$1.33S_{58}$	LCDS	1,2,3,4 6,7

*Resulting allowables shall not exceed $0.9S_Y$ for tension and $0.52S_y$ for shear. For U-bolt and unistrut type allowables, see section 3.9.4.2.

NOTES

1. S_{AISC} = Allowable Stress Defined in Part 1 of the AISC Specification
   S_Y = Minimum Yield Stress
   S_{58} = Load Rating Defined Per MSS SP-58
   LCDS = Load Capacity Data Sheets
2. This also includes supports on Class A piping (Reactor Coolant Loop Branch Lines) analyzed by TVA
3. Loads which are not concurrent need not be combined. See Design Criteria SQN-DC-V-24.2 (Reference 18) for additional information associated with load combinations and stress limits.
4. Pipe rupture (i.e., jet impingement, etc.) is not considered unless required by the evaluation methods given in Section 3.6.
5. Dynamic loads may be combined by the square root of the sum of the squares (SRSS) method if the time - phase relationship between the dynamic loading events is such that the maximum support loads resulting from the events are not postulated to occur at the same time. The guidelines provided in NUREG-0484 will be used to determine when the SRSS combination method is applicable.
6. This additional faulted loading combination applies only to containment spray and RHR supports attached to the steel containment vessel.
7. This additional faulted loading combination applies only when the seismic pipe support is utilized as a pipe rupture restraint.

Table 3.9.3-1

MAXIMUM DEFLECTIONS FOR REACTOR INTERNALS UNDER BLOWDOWN AND SEISMIC EXCITATION

(1-MILLISECOND DOUBLE-ENDED BREAK)

Component	Blowdown Deflection (Inches) Cold Leg	Blowdown Deflection (Inches) Hot Leg	Seismic Deflection, (Inches)	Direction	Maximum Total Deflection, (Inches)	Allowable Deflection, (Inches)	Deflection, No Loss of Function (Inches)
Upper Barrel							
Radial Inward	0.0	0.057	0.002	Horizontal	0.059	4.1	8.2
Radial Outward	0.431	0.029	0.002	Horizontal	0.460	0.5	1.0
Upper Core Plate	0.016	0.015	0	Vertical	0.016	0.100[a]	0.150
Rod Cluster Control							
Guide Tubes							
(Deflection as a Beam)							
(54)		<Allowable	0.010	Horizontal	<Allowable	1.0	1.60 to 1
(2)		<N.L.F.	0.010	Horizontal	<N.L.F.	1.0	1.60 to 1
		<Allowable			<Allowable		
(5)		<N.L.F.	0.010	Horizontal	<N.L.F.	1.0	1.60 to 1
Fuel Assembly	~0	~0	~0	Horizontal	~0	0.036	0.072
Thimble (Cross Section Distortion)							

[a] Only to assure that the plate will not touch a guide tube.

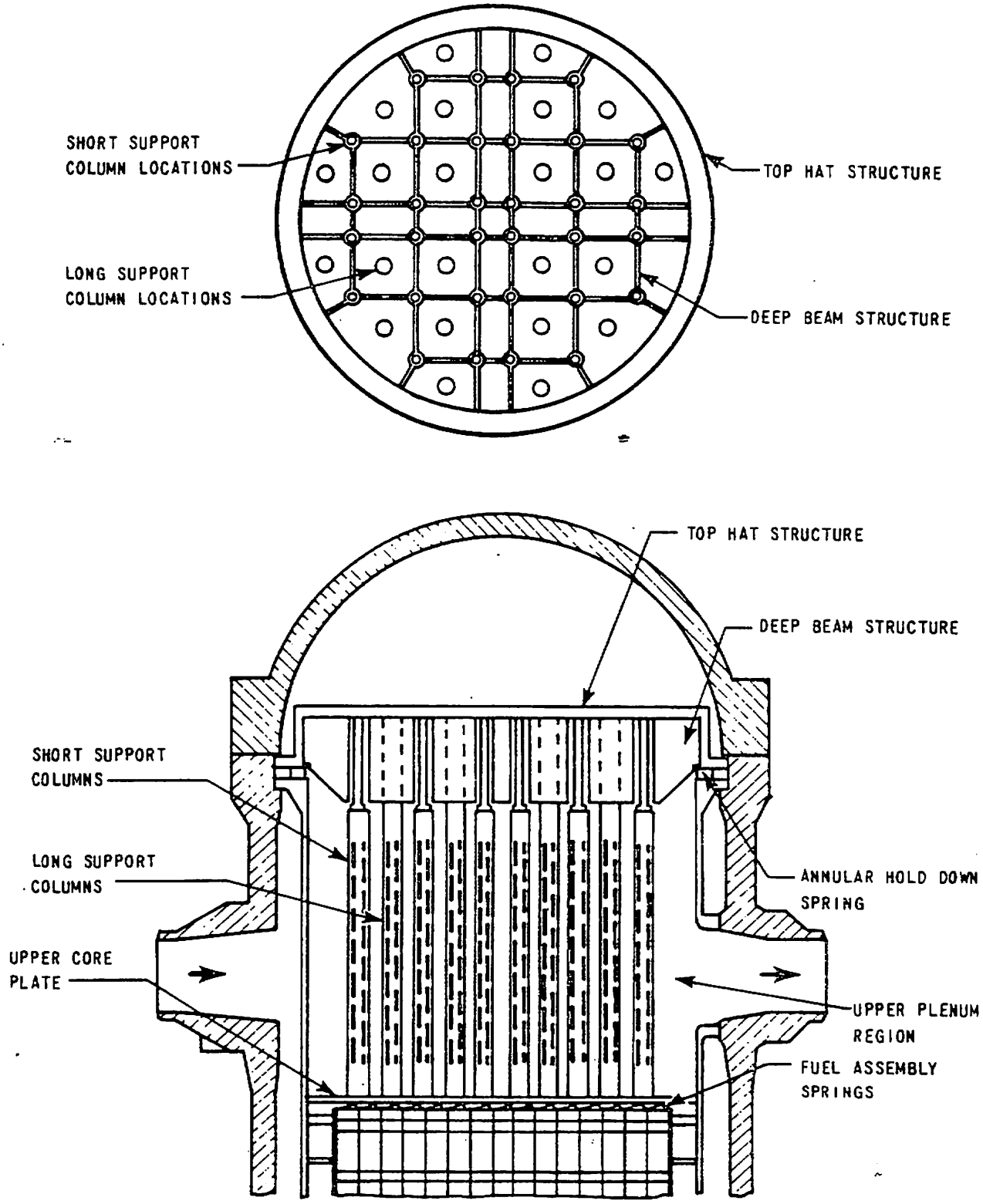

Figure 3.9.1-1 Upper Internals Assembly

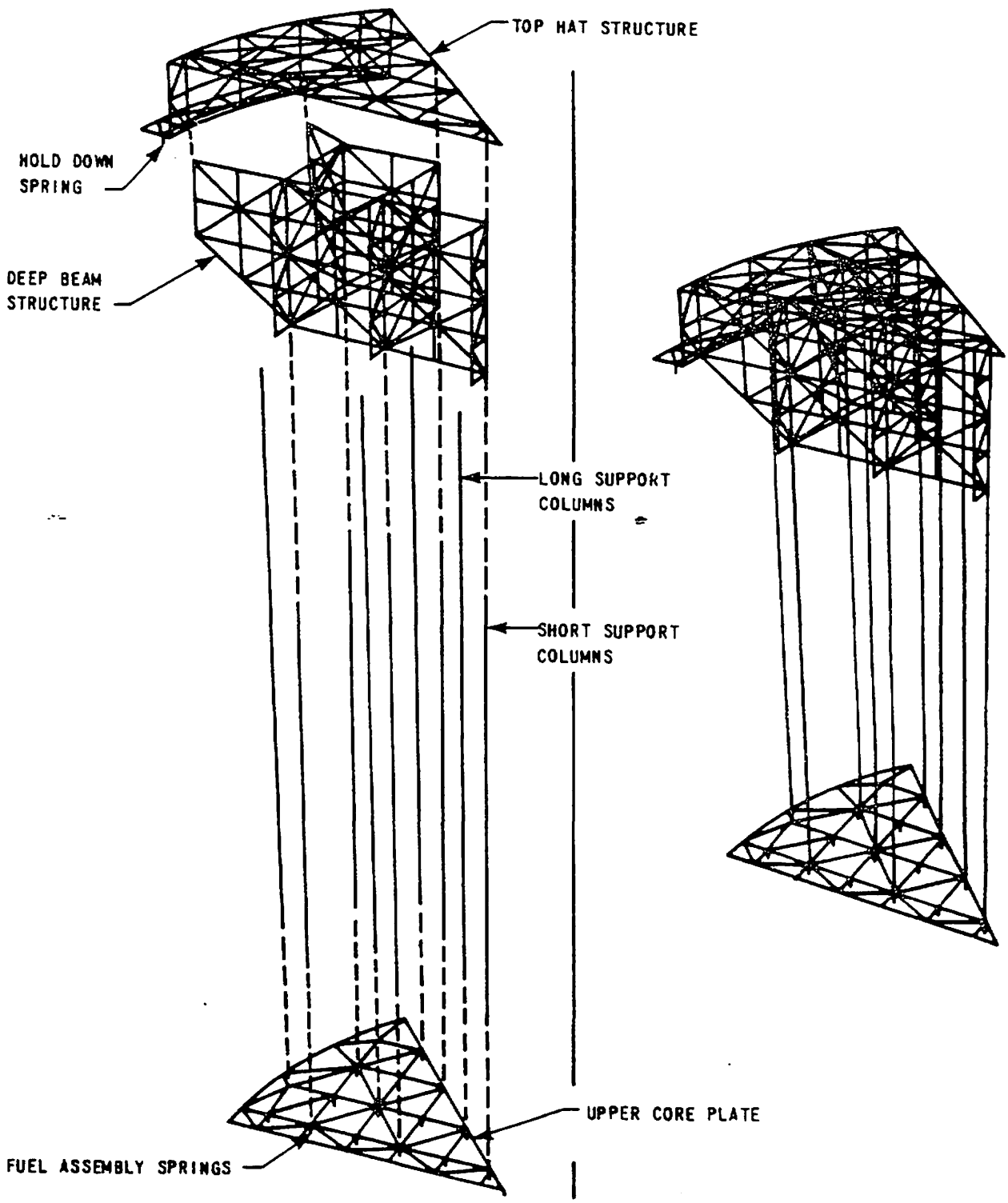

A) MODEL OF UPPER PACKAGE WITH VARIOUS COMPONENTS SEPARATED

B) FULLY ASSEMBLED MODEL

Figure 3.9.1-2 Upper Internal Support Model

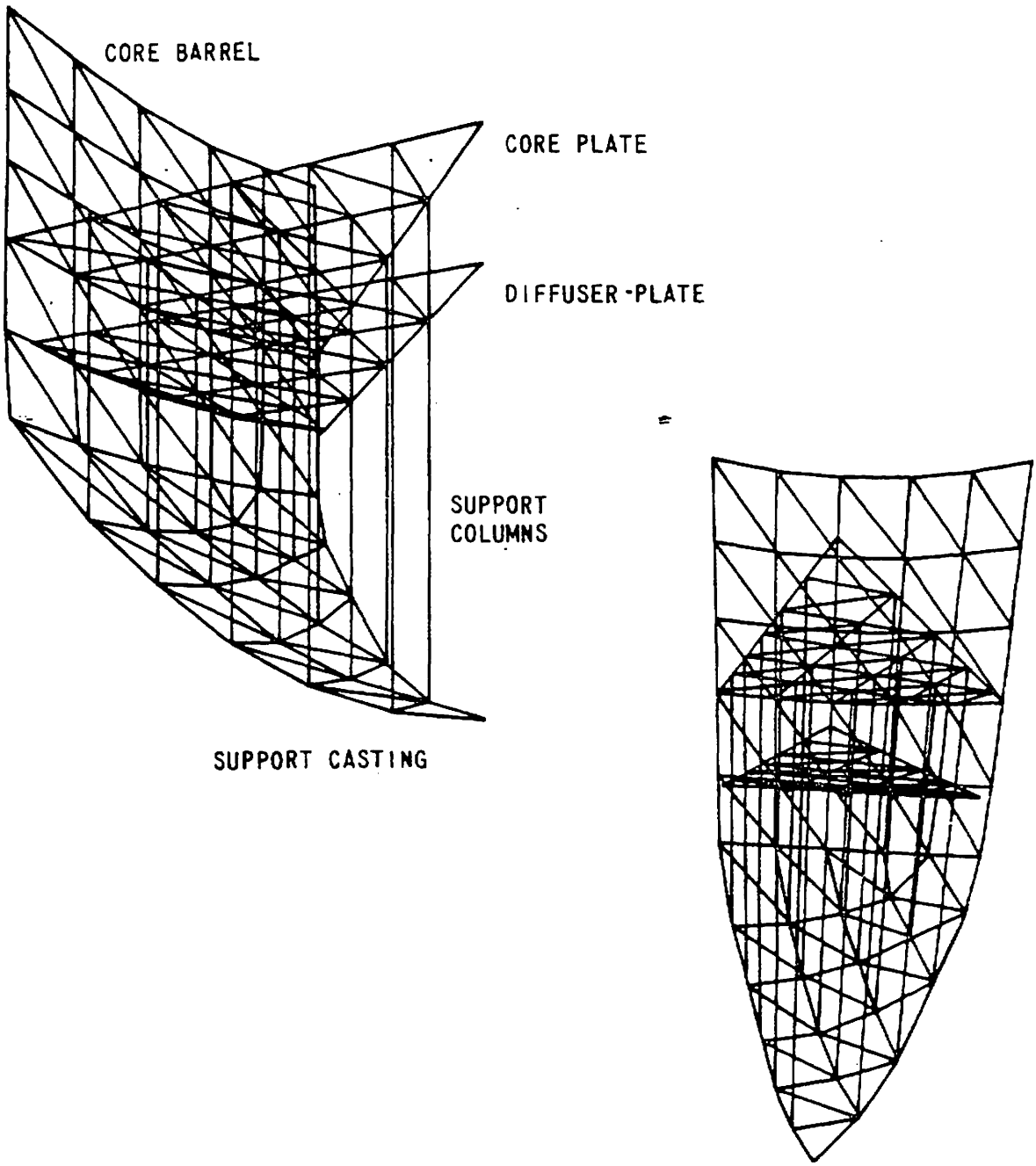

Figure 3.9.1-3 Computer Geometry Plot of Lower Internals Support Model

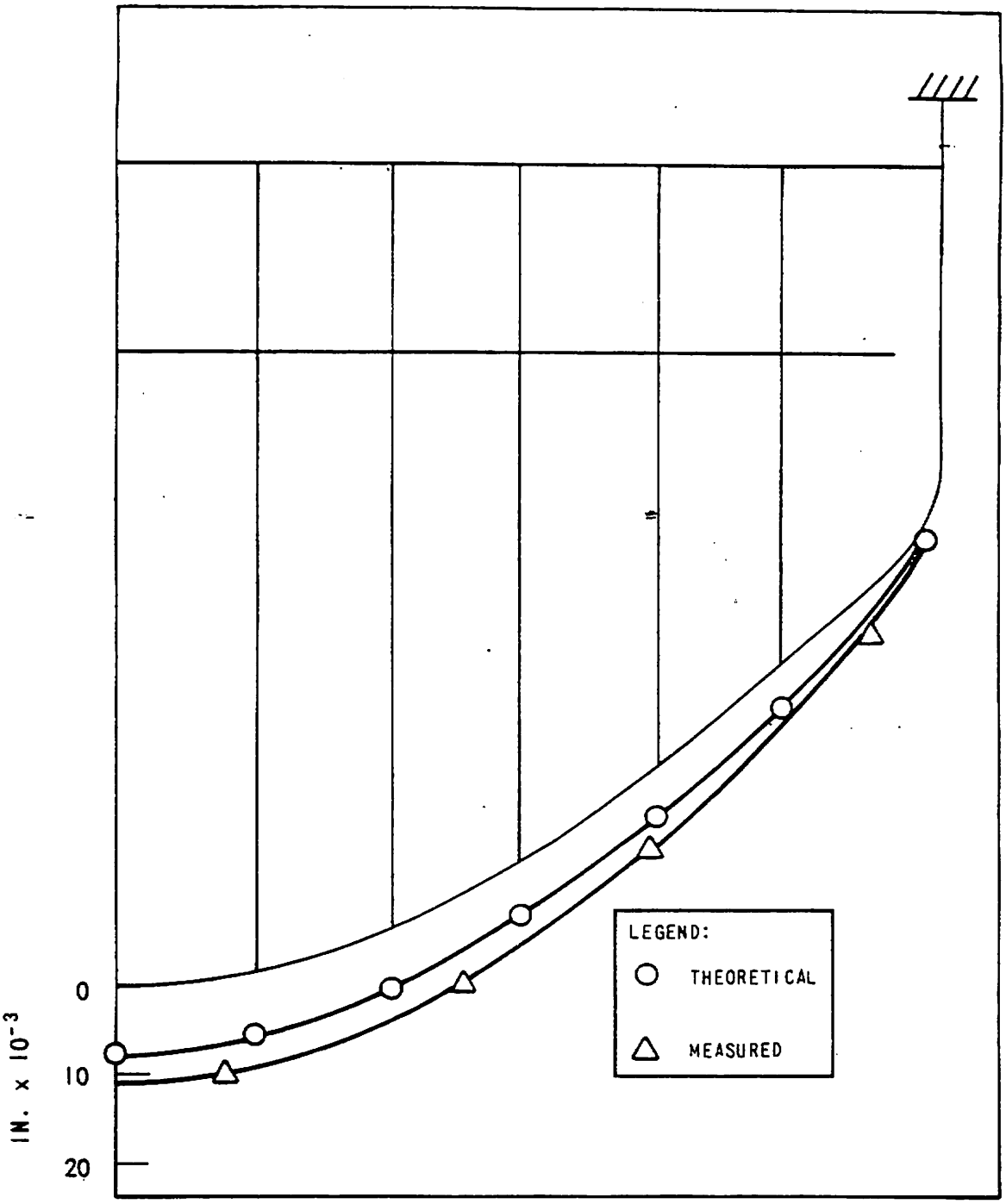

Figure 3.9.1-4 Lower Internals Support Structure Comparison Between Experimental and Theoretical Vertical Deflections

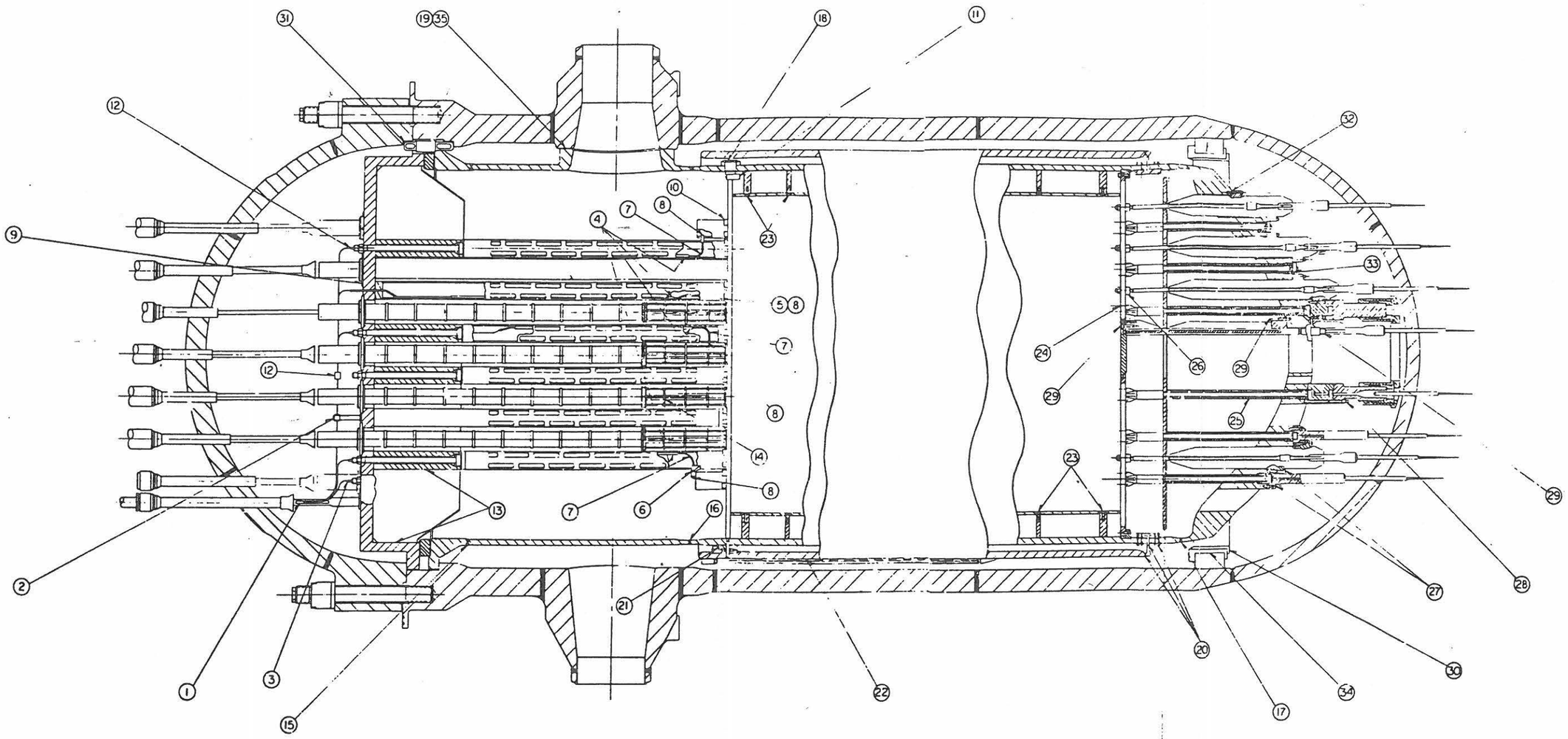

Figure 3.9.1-5 Reactor Vessel and Internals Vibration

		FEATURES TO BE EXAMINED
UPPER INTERNALS	1	THERMOCOUPLE CONDUIT CLAMPS INSIDE THE THERMOCOUPLE COLUMN.
	2	CLAMP ARRANGEMENTS AT THE MOUNTING BRACKET LOCATIONS.
	3	PLUG TO CONDUIT WELD AT THE FIVE SUPPORT COLUMNS ADJACENT TO THE THERMOCOUPLE COLUMNS.
	4	ACCESSIBLE ANGLE CONDUIT CLAMPS INSIDE THE UPPER SUPPORT COLUMNS.
	5	ACCESSIBLE WELD JOINTS AT THE THERMOCOUPLE STOP FOR THE SELF INSTRUMENTED COLUMNS.
	6	WELD JOINTS ON ACCESSIBLE SUPPORT COLUMN AND MIXING DEVICE GUSSETS. (THERMOCOUPLE SUPPORT HARDWARE)
	7	RIGIDITY OF EXPOSED PORTION OF THERMOCOUPLE CONDUIT RUNS. AT ACCESSIBLE LOCATIONS. (INSIDE SUPPORT COLUMNS – LOWER END)
	8	RIGIDNESS OF THE ACCESSIBLE PROTRUDING THERMOCOUPLE TIPS
	9	THERMOCOUPLE COLUMN AND GUIDE TUBE SCREW LOCKING DEVICES.
	10	ACCESSIBLE SUPPORT COLUMN MIXING DEVICE. ORIFICE PLATE. AND CORE PLATE INSERT SCREW LOCKING DEVICES.
	11	UPPER CORE PLATE INSERTS.
	12	CONDUIT CONNECTOR FITTINGS AND CROSS RUN CLAMP ARRANGEMENTS.
	13	DEEP BEAM WELDS AT THE SKIRT AND AT THE OUTER HOLLOW ROUNDS.
	14	ACCESSIBLE GUIDE TUBE WELDS.
LOWER INTERNALS	15	UPPER BARREL TO FLANGE GIRTH WELD.
	16	UPPER BARREL TO LOWER BARREL GIRTH WELD.
	17	LOWER BARREL TO CORE SUPPORT GIRTH WELD.
	18	UPPER CORE PLATE ALIGNING PIN WELDS AND BEARING SURFACES.
	19	OUTLET NOZZLE INTERFACE SURFACE CONDITION.
	20	THERMAL SHIELD FLEXURE ARM. ATTACHMENTS TO BARREL. AND WELD TO THE THERMAL SHIELD. DYE PENETRANT INSPECT ALL SIX.
	21	THERMAL SHIELD INTERFACE AT THE HANG OFF PADS.
	22	IRRADIATION SPECIMEN BASKET WELDS.
	23	BAFFLE ASSEMBLY SCREW LOCKING ARRANGEMENTS AT THE TWO TOP AND THE TWO BOTTOM FORMER ELEVATIONS.
	24	CORE SUPPORT COLUMN TO LOWER CORE PLATE SCREW LOCKING DEVICES. (24 RANDOMLY CHOSEN)
	25	CORE SUPPORT COLUMN ADJUSTING SLEEVES.
	26	ACCESSIBLE (2) INSTRUMENTATION GUIDE COLUMN LOCKING COLLARS NEAREST THE MANWAY.
	27	LOCKING DEVICES OF THE BOTTOM INSTRUMENTATION GUIDE COLUMNS.
	28	LOCKING DEVICES OF THE SECONDARY CORE SUPPORT.
	29	ACCESSIBLE LOCKING DEVICES OF THE OFF-SET INSTRUMENTATION COLUMN. (UPPER AND LOWER ENDS)
	30	RADIAL SUPPORT KEY LOCKING ARRANGEMENTS AND BEARING SURFACES.
	31	HEAD AND VESSEL ALIGNING PIN SCREW LOCKING DEVICES AND BEARING SURFACES.
	32	CONTACT AT INTERFACE OF THE ACCESSIBLE INSTRUMENTATION GUIDE COLUMNS.
	33	CONTACT AT INTERFACE OF THE ACCESSIBLE CORE SUPPORT COLUMN NUTS.
VESSEL	34	VESSEL CLEVIS LOCKING ARRANGEMENTS AND BEARING SURFACES.
	35	VESSEL NOZZLE INTERFACE SURFACE CONDITION.

Figure 3.9.1-5 (cont)

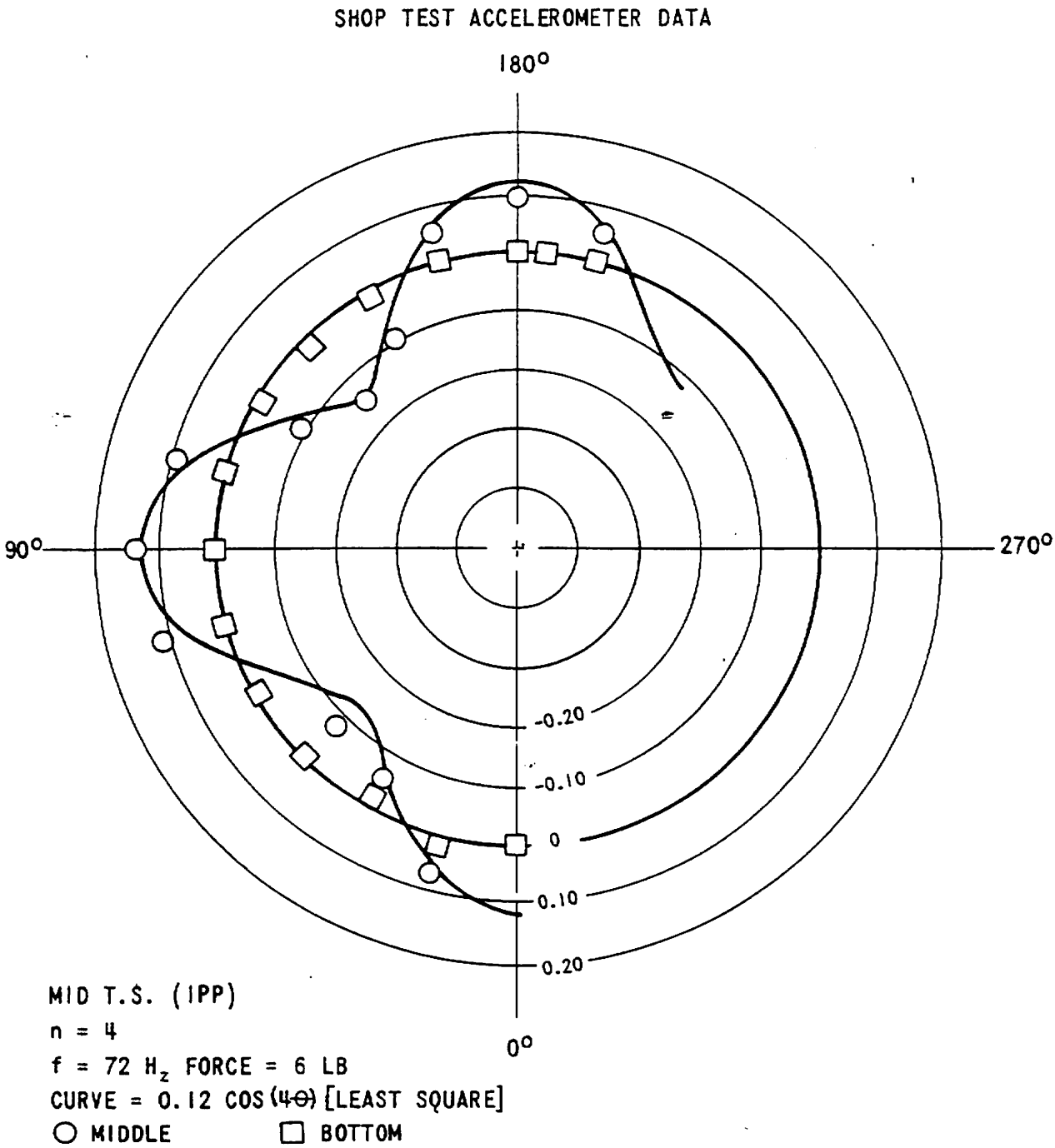

Figure 3.9.1-6 Thermal Shield, Mode Shape n = 4 Obtained from Shaker Test

REVISED BY AMENDMENT 6

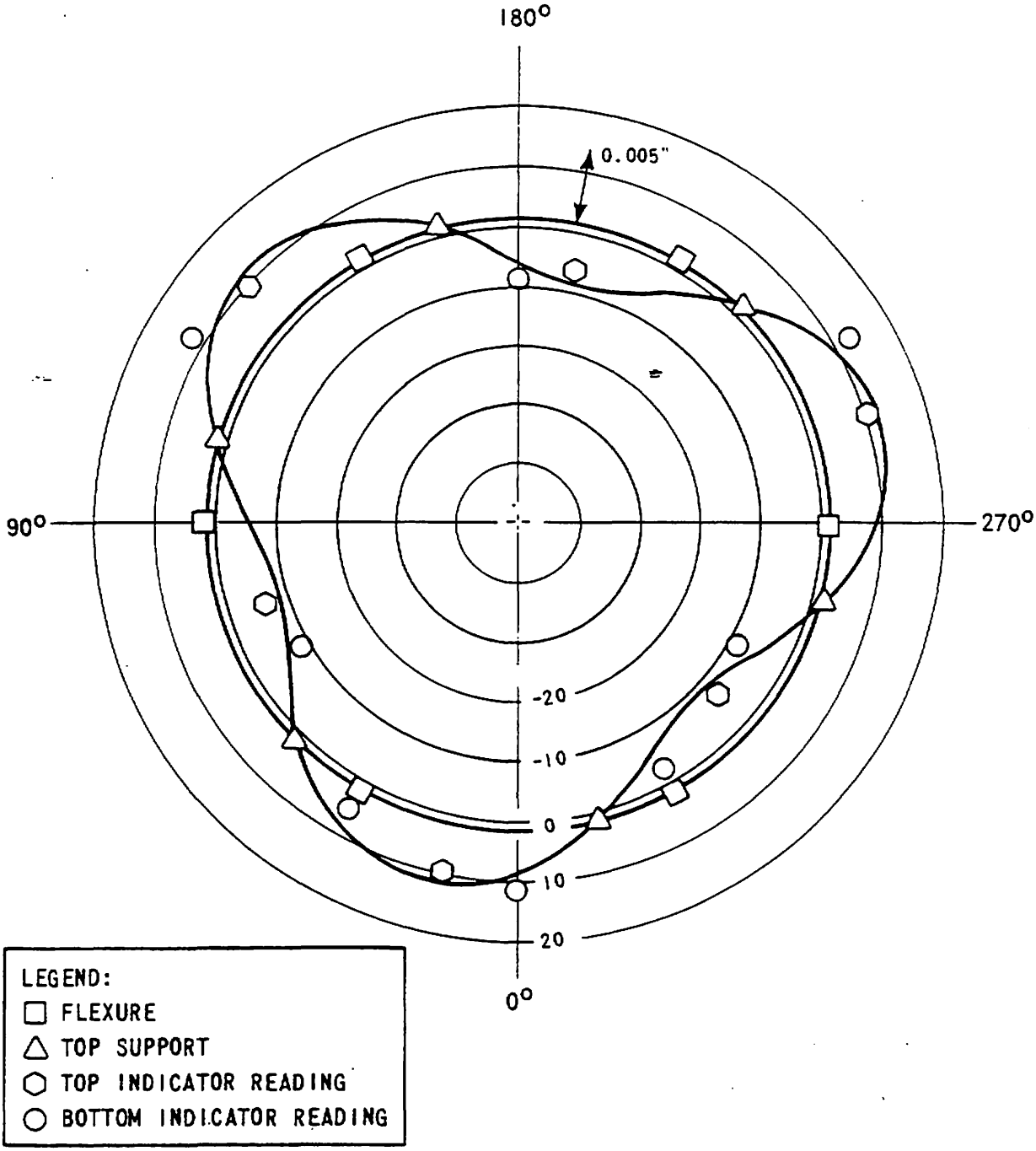

Figure 3.9.1-7 Thermal Shield, Maximum Amplitude of Vibration During Preoperational Tests

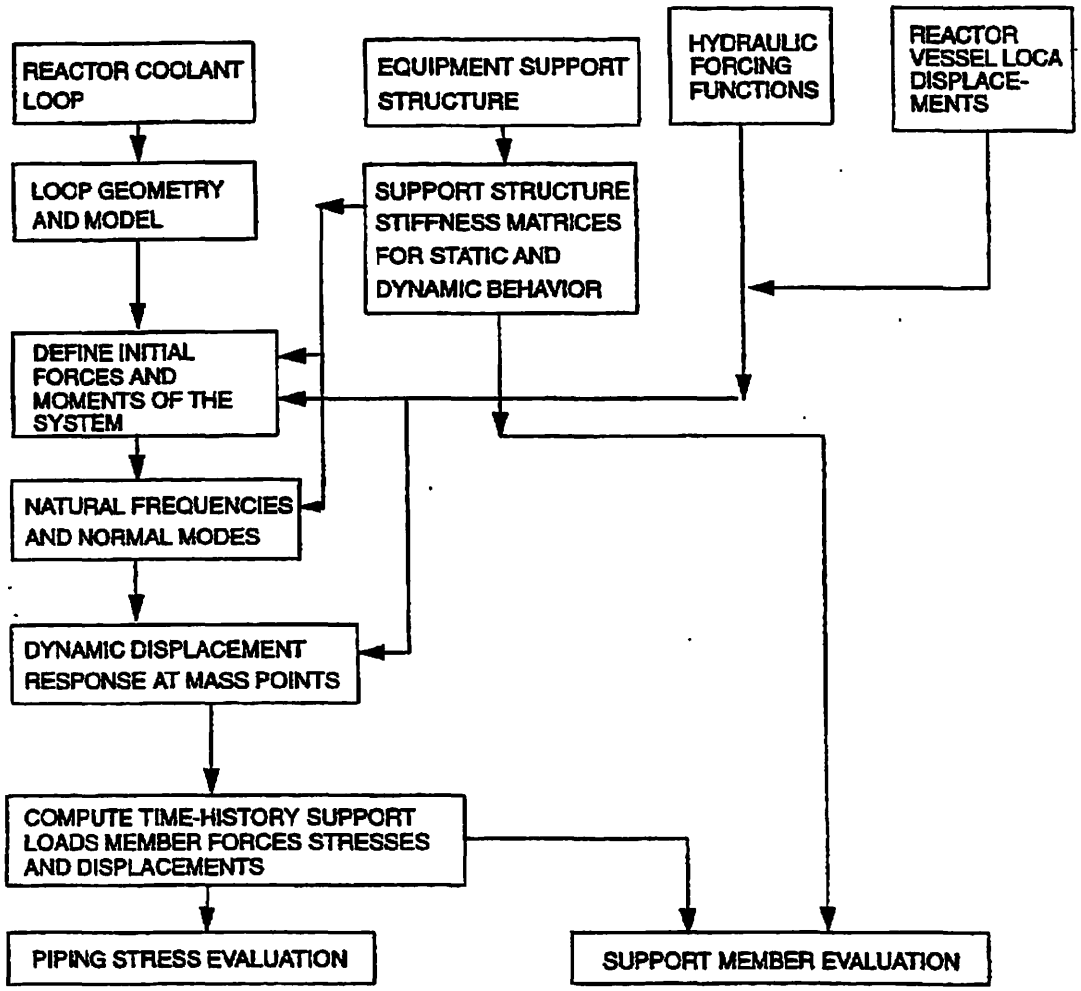

FIGURE 3.9.1-8

Time-History Dynamic Solution for LOCA Loading

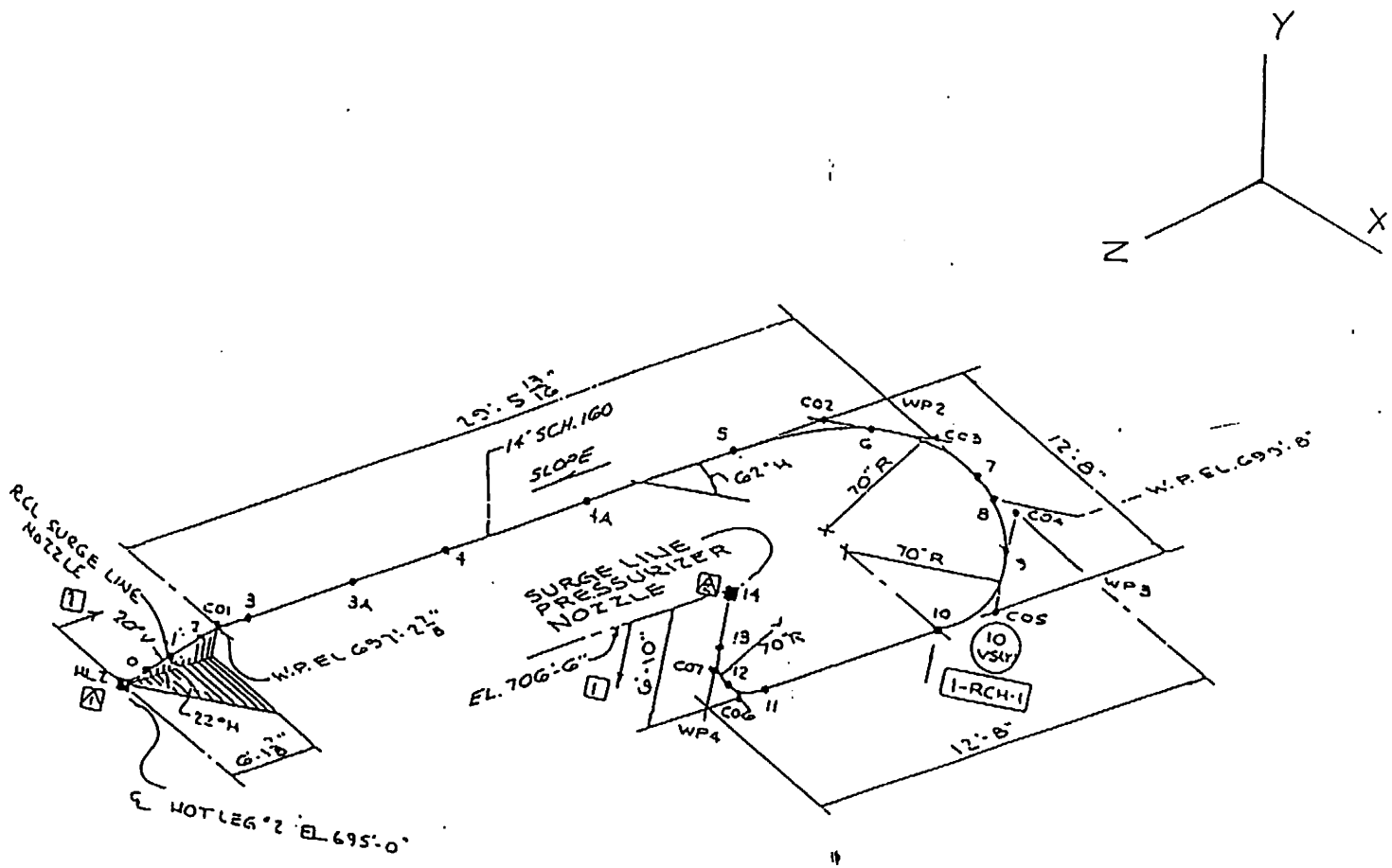

FIGURE 3.9.2-1 Reactor Coolant Piping Pressurizer Surge Line (EDS 0600102-13-01 R0)

Revised by Amendment 10

3.10 SEISMIC DESIGN OF CATEGORY I INSTRUMENTATION AND ELECTRICAL EQUIPMENT

3.10.1 Seismic Design Criteria

3.10.1.1 Instrumentation

TVA supplied instruments are classified as Seismic Category I in accordance with the system served and instrument function. Seismic Category I systems are identified in Subsection 3.2.1. TVA instruments and instrument supporting structures are qualified per TVA Quality Assurance documents inserted as appendices to specifications for the equipment. Procurement specifications prior to September 1, 1974 reflected the guidance of IEEE 344-1971. Subsequent specifications reflect the recommended practices of IEEE 344-1975 to the fullest extent reasonably possible.

The seismic qualification of safety-related electrical and mechanical equipment (including fluid system components such as pumps, valves, and tanks) at SQN has been evaluated against current criteria, IEEE 344-1975 and Regulatory Guide 1.100 (Reference 16). The NRC's Seismic Qualification Review Team (SQRT) conducted the evaluation during the licensing phase. The SQRT concluded that the SQN equipment, originally qualified in accordance with IEEE 344-1971, satisfies the requirements of IEEE 344-1975 and Regulatory Guide 1.100 (Reference 17). The results of the NRC SQRT audit provide justification for making IEEE 344-1975 the design basis acceptance criteria for the seismic qualification of safety-related electrical and mechanical equipment at Sequoyah. In accordance with the SQRT audit commitments, to the fullest extent reasonably possible, this acceptance criteria has been used for procurement of new equipment and evaluation of existing equipment for the Sequoyah design basis seismic events since September 1, 1974 (Reference 18).

Type testing for seismic qualification has been performed on the Seismic Category I instruments. The instruments are capable of performing their function during and following a Safe Shutdown Earthquake. For the purpose of ensuring compatibility between the instruments and instrument supporting structures, the seismic qualification of instruments is sufficiently high to envelop its installation requirements, including any applicable support structure amplification.

The reactor trip system, and engineered safety features actuation system are designed so that they are capable of providing the necessary protective actions during and after a Safe Shutdown Earthquake (SSE); therefore, the reactor protection system will be capable of tripping the reactor during and after a Safe Shutdown Earthquake. The engineered safety features actuation system and the safety features systems are designed to initiate their protective functions during and after an SSE.

The following list identifies typical instrumentation and electrical equipment requiring seismic qualification by the supplier of the Nuclear Steam Supply System.

1. Foxboro Model E-11 pressure transmitter and Model E-13 differential pressure transmitter.

2. Foxboro Process Control Equipment cabinets.

3. Westinghouse Solid-State Protection System cabinets.

4. Nuclear Instrumentation System cabinets.

5. Safeguards Test Racks.

6. Resistance Temperature Detectors.

7. Power range Neutron Detectors.

8. Reactor trip breakers.

9. Barton Models 332 and 386 differential pressure transmitters.

10. Main Control Room Panels.

References 1 through 5 provide the typical seismic evaluation of Seismic Category I instrumentation and electrical equipment supplied by Westinghouse. These documents satisfy the requirements of IEEE 344-1971. The results show that there were no electrical irregularities that would leave the plant in an unsafe condition even though some trips were initiated.

Resistance temperature detectors used to sense the temperature in the main coolant loops are rigid, ruggedly built devices designed to withstand the high temperature, high pressure, and flow vibration induced acceleration forces which they are subjected to when installed in the coolant loops. The natural frequency of these devices is designed to be higher than the frequencies associated with the seismic disturbance. Since these resistance temperature detectors are designed and built to operate in a rugged environment and are considered a rigid body at seismic disturbance frequencies, no seismic testing is necessary.

The Nuclear Instrumentation System power range neutron detector has been vibration tested in both the transverse (horizontal) direction and the longitudinal (vertical) direction at acceleration levels greater than those expected during a seismic disturbance at the Sequoyah Nuclear Plant site. Detector current measurements were made during the tests and neutron sensitivity, resistance, and capacitance checks were made after the tests. No significant changes were seen. There was no mechanical damage to the detector.

Typical switches, which could defeat automatic operation of a required safety function, and indicators have been tested to determine their ability to withstand seismic excitation without malfunction. The control boards are stiff and past experience indicates that the amplification due to the board structure is sufficiently low so that the acceleration seen by the device is considerably less than that used in testing.

All critical instruments of the reactor protection system and the engineered safety feature circuits are mounted on Seismic Category I supporting structures. They are designed to withstand horizontal and vertical accelerations at each floor level for the safe shutdown earthquake. See Paragraph 3.7.2.2 for a discussion on the development of the response spectra at critical plant elevations. The instrument supporting structures located throughout the plant (local panels) have

been standardized in design and have been analyzed and seismically qualified by testing. The local panels were tested using response spectra for the highest elevation (El 763) on which any of these panels are mounted. The test criteria was developed per the applicable QA program documents and IEEE 344-1971.

Where space requirements preclude the use of the standard local panels, a small wall-mounted panel designed for only two instruments is used. This panel is qualified, to the same criteria as the local panels, by analysis. The analysis is very conservative and shows that the wall- mounted panels are adequate for supporting Seismic Category I instrumentation.

In addition, any instrumentation used for plant upgrade, such as Post-TMI Instrumentation, which is purchased after the May 23, 1980 issuance of Commission Memorandum and Order 80-CLI-21, is to be qualified to the requirements of IEEE 344-1975.

3.10.1.2 Electrical Equipment

Category I electrical equipment is identified in Subsection 3.2.1, Seismic Qualifications. That list also indicates the degree of compliance with IEEE 344-1971, for each Seismic Category I component.

The capability of ESF circuits and the standby power system to withstand seismic disturbances during post accident operation is established by seismic analysis and/or testing of each system component. The occurrence of a LOCA will not affect the seismic integrity of these components. The design criteria used in the design of Seismic Category I electrical equipment are given below.

1. Equipment designated Seismic Category I, when subjected to the vertical and horizontal acceleration of the safe shutdown earthquake, shall perform as follows:

    a. Equipment shall retain its structural integrity during and after the maximum peak accelerations obtained from the floor response spectrum for the equipment location and the natural frequency of the equipment.

    b. Equipment shall be capable of performing its design function during and after the maximum peak accelerations obtained from the floor response spectrum for the equipment location and the natural frequency of the equipment. No device whose incorrect operation could jeopardize the capability of performing the required reactor protective action immediately after the earthquake shall be caused to misoperate by the maximum peak accelerations.

    c. Maximum displacement of the equipment during the earthquake shall not cause loss of integrity with any externally connected parts, such as conduit, cable, or bus connections.

    d. The equipment shall be designed for anchoring firmly to the floor. The weight and center of gravity location, recommended location, and strength of anchors, shall be documented.

3.10.2 Seismic Analyses, Testing Procedures, and Restraint Measures

3.10.2.1 Instrumentation

The seismic type testing performed by the Nuclear Steam Supply System supplier (Westinghouse) is described in References 1 through 5. The test method used was the sine beat procedure described in IEEE Standard 344-1971.

The seismic type testing using the sine beat procedure described in IEEE 344-1971 has been evaluated against IEEE 344-1975 and Regulatory Guide 1.100 (Reference 16). The NRC's Seismic Qualification Review Team (SQRT) conducted a generic review of Westinghouse supplied equipment as described in WCAP-8833 and related documents. The SQRT concluded that the equipment, originally qualified in accordance with IEEE 344-1971, satisfies the requirements of IEEE 344-1975 and Regulatory Guide 1.100 (Reference 17). The results of the NRC SQRT audit provide the justification for making IEEE 344-1975 the design basis acceptance criteria for the seismic qualification of safety-related electrical and mechanical equipment at Sequoyah.

3.10.2.2 Supporting Structures

Panels

The qualification of the supports for Seismic Category I instruments has been accomplished by either analysis or testing. The method commonly used is testing under simulated conditions. Basically, all tests by TVA on supporting structures were similar and were qualified under similar specifications. The support structure was mounted on a vibration generator in a manner that simulated the intended service mounting. The vibratory forces were applied to each of the three major perpendicular axes independently. Maximum service dead loads were simulated. Selected points were monitored to establish amplification of loads. Testing was done at the structure's resonant frequencies. The resonant frequencies were determined by an exploratory test using a sinusoidal steady-state input of low amplitude, (two continuous sweeps from 1 to 35 and back to 1 Hz at a rate of 1 to 10 Hz per minute). The qualification test was conducted using the sine beat method at the resonant frequencies using the appropriate acceleration input as determined from the building response acceleration spectra.

The local panel tests conformed to the "Design Qualification of Seismic Class I and Seismic Class II Mechanical and Electrical equipment" given in the applicable QA program documents. The test specimen consisted of an instrumented panel with worst case instruments mounted. The panel was bolted to the floor as it will be bolted in service. The test acceleration input was .42 g horizontal and .28 g vertical with a frequency range of 1 to 35 Hertz. The test was run using the sine beat method at resonant frequencies determined by sweeping at a low amplitude of 0.1 g. Each axis was tested independently. The panels are so designed that no detrimental amplification of loads occurred that would cause the instruments to fail to perform their function. This was verified by monitoring the induced accelerations of the worst case instruments during testing. See Reference 13 for results.

Additional similar modular-type panels that are prewired are used at El 690 and are also qualified at the Safe Shutdown Earthquake. The seismic testing for these particular panels was performed per Appendix C of Contract 73C-92784.

Electric Equipment Supports

1. Restraint Measures

   Typically, category I electric equipment such as battery racks, instrument racks, and control consoles, located in Category I structures, are attached to anchor plates by bolting or welding. These anchor plates are of ASTM A36 steel embedded in the concrete slab using headed concrete anchor studs welded to the plate.

2. Analyses

   For dead loads combined with live loads and for dead loads combined with 1/2 safe shutdown earthquake, the designs are based on allowable stress levels of the AISC Specification of Structural Steel for Buildings. For dead loads combined with safe shutdown earthquake loads the stresses are limited to 90 percent of yield stresses for the material involved. Information on equipment weights, centers of gravity, and response frequencies is obtained from the vendor. Unless the vendor has certified a natural response frequency in the rigid range for the item of equipment, the design is for the floor resonant response frequency using the seismic amplification factors covered in Section 3.7.

Cable Tray and Supports

1. Cable Trays

Cable trays located in Category I structures except those in the CCW Intake Pumping Structure and the communications and secondary alarm station (SAS) rooms (el. 669, control bldg.) are considered safety related and are designed to resist gravity and Safe Shutdown Earthquake (SSE) forces. There are no safety related cables routed on the trays in the intake structure or the communications and SAS rooms, and it has been determined that should these trays fall, no Category I equipment would be damaged.

Cable tray acceptance criteria are derived from testing. A factor of safety of 1.25 against the tested capacity, is maintained for the vertical load for normal horizontal tray configurations. A maximum ductility factor of 3 (based on test data) is used to define an elastic-perfectly plastic curve that is used in the transverse direction (parallel to the rungs). These limits are used in an interaction equation to evaluate tray sections for the SSE loading condition. The trays are evaluated to ensure a minimum factor of safety of 1.25 against test capacity for actual dead loads.

Cable tray X and T fittings are evaluated to ensure a minimum factor of safety of 1.25 against formation of a first hinge in the direction for normal vertical loadings. These fittings are not evaluated in the horizontal direction since intersecting trays provide axial support in this direction.

Other cable tray components (i.e., bolts and connectors) are evaluated using American Iron and Steel Institute or American Institute of Steel Construction allowables with a .9 Fy limit. Where test data is used to establish capacities, a factor of safety of 1.5 is maintained against the ultimate test load for the SSE loading condition.

The cable trays are designed to carry a design load of 30 pounds per square foot (45 pounds per linear foot for 18 inch trays). In cases where weights exceed these values (because of cable overfill and application of flame-retardant coating), the actual dead loads are used. The trays are qualified for dead load, construction load, design basis accident loads, and SSE loads.

2. Supports

Cable tray supports for the above trays are designed to resist seismic forces applied to the dead weight of trays and cables. Each support is designed independently to support its appropriate length of tray and cable weights. Consideration is given to the relative stiffness of adjacent supports in the longitudinal direction of a tray run for determination of the appropriate length of tray. Additional load in the longitudinal direction of the tray is conservatively included for long straight tray runs, if the support is rigidly braced in the longitudinal direction and all other supports are flexible cantilevers. Seismic load inputs are based on dynamic analysis applied to either axis of the support using methods described in Section 3.7. Seismic loads are based on 5% SSE and 2% OBE damping.

In addition to the 30 pounds per square foot tray load and the actual tray loads when they exceed this value, the supports are designed to carry an additional construction load of 30 pounds per linear foot on the top tray. Load combinations and allowable stresses are as contained in Table 3.10.2-1. For evaluation of tube to tube interfaces, the methodology provided in AWS D1.1-81 is used.

Conduit and Supports

1. Conduit

   Conduit containing Class 1E cables located in Category I structures are considered safety related and designed to resist gravity and SSE forces. The conduit stresses and support loads are determined based on SSE design response spectra generated at 5 percent damping. The seismic qualification utilizes the same analysis methods as seismic Category I subsystems described in Section 3.7.3 and limits allowable stress to 90 percent of the yield stress of the conduit material.

2. Supports

   All conduit supports in Category I structures are designed to resist gravity and SSE forces applied to the conduit and cables. Supports for conduit containing Class 1E cables are designated Category I and stresses are limited to 90 percent of the yield stress of the support material. Seismic load inputs are based on SSE design response

spectra generated at 5 percent damping. Supports for conduit containing only non-Class 1E cables are designated Category I(L) and designed to preclude a failure which would reduce the ability of Category I structures, systems, and components to perform their intended safety-related function.

3. Conduit Banks

The Category I underground electrical conduit banks which run from the Auxiliary Building to the Diesel-Generator Building, to the auxiliary cooling towers, and to the pumping stations were analyzed by one of the following two methods.

1. The conduit banks were analyzed as a beam with unconstrained ends, on an elastic foundation.

2. The conduit banks were assumed to have the same motion as the soil deposits in which they are buried. The soil deposit was then assumed to be an infinitely long uniform soil deposit resting on a rigid foundation which responds to earthquake motion by moving a continuous sinusoidal plane wave. The soil displacement and bending moments for the conduit banks were determined using the following equations.

The displacement (D) of the soil is

$$D = a_{\max}\left(\frac{T}{2\pi}\right)^2$$

Where a_{max} = Maximum soil acceleration considering the effects of soil amplification on the peak rock acceleration
T = Fundamental period of soil deposit

The fundamental period and the effect of amplification of the input motion by the soil deposit were found by modeling the soil deposit as an elastic medium and making a dynamic analysis of a slice of unit thickness using only the horizontal shearing resistance of the soil.

The wave length (L) is

$$L = T V_{ST}$$

where V_{ST} = Average shear wave velocity of the soil deposit

Using the results from the above equations, the bending moment due to the earthquake is

$$M = EID\left(\frac{2\pi}{L}\right)^2$$

where E = Young modulus of conduit bank
I = Moment of inertia of conduit bank
L = One-half of the wave length

Welds

Welding for structural supports was in accordance with the American Welding Society, "Structural Welding Code," AWS D1.1-72 as implemented by TVA General Construction Specification G-29C. Nuclear Construction Issues Group documents NCIG-01, Revision 2, may be used after June 26, 1985, to evaluate weldments that were designed and fabricated to the requirements of AISC/AWS. When invoked, NCIG provisions will be implemented as indicated in section 3.6.8.

3.10.3 References

1. E. L. Vogeding, "Seismic Testing of Electrical and Control Equipment," WCAP-7817, December 1971.

2. E. L. Vogeding, WCAP-7817, Supplement 1, December 1971.

3. L. M. Potochnik, WCAP-7817, Supplement 2, January 1972.

4. E. L. Vogeding, WCAP-7817, Supplement 3, January 1972.

5. R. B. Miller, WCAP-7817, Supplement 8, June 1975.

6. F. Loceff, C. W. Lin, WCAP-8540, "Seismic Qualification of the Full Size Main Control Boards," May 1975.

7. SQN Environmental Qualification Packages ITE-001, -002, and -003.

8. Design Criteria SQN-DC-V-27.9 R2, "Reactor Protection System."

9. Memorandum from J. I. Givens to R. M. Pierce dated January 9, 1973, "Seismic Qualification of Wall Mounted Panels for Mechanical Instruments and Controls."

10. U.S. Nuclear Regulatory Commission (NRC) letter to Tennessee Valley Authority dated November 16, 1976, "Trip Report on Seismic Audit of TVA Equipment."

11. Tennessee Valley Authority letter to U.S. NRC dated February 7, 1977, "Seismic Qualification of Safety-Related Equipment."

12. Deleted by Amendment 8.

13. Wyle Laboratory T.R. 42377-1, "Seismic Simulation Test Program on Instrumentation Rack," Contract 72C33-92800.

14. Acton Test Report No. 10348, "Seismic Testing of 4-Bay Cabinet for Bailey Meter Company," Contract 73C3-92784.

15. Acton Test Report No. 10348-1, "Seismic Testing of Single Bay Cabinet for Bailey Meter Company," Contract 73C3-92784.

16. Letter from NRC to TVA dated October 29, 1987 (A02 87 1105 014).

17. Supplement No. 1 To The Safety Evaluation Report NUREG-0011, Section 3.10.3.

18. Letter from TVA to NRC responding to URI-88-12-08, dated July 27, 1990 (L44 90 0727 801).

Table 3.10.2-1

Load Combinations and Allowables for Cable Tray Supports

Load Combination	Allowable
D + E	S
D + To + E	S
D + To + E'	.9FY
D + To + E' + DBA	.9FY
D + Ta + E'	.9FY

D - Dead Load (includes construction load on top tray)

To - Thermal effects and loads during normal operating or shutdown conditions based on the most critical transient or steady-state condition.

E - Operating Basis Earthquake (1/2 Safe Shutdown Earthquake)

E' - Safe Shutdown Earthquake

DBA - Loads generated by the design basis accident

Ta - Thermal loads under thermal conditions generated by the postulated break and including To.

S - The required section strength based on elastic design methods and the allowable stresses defined in Part 1 of the AISC "Specification for the Design, Fabrication, and Erection of Structural Steel for Buildings"

.9FY - Stresses are limited to 90 percent of yield stress for the material involved, except for shear which is limited to .52 times the yield stress, and axial compression which is limited to .9 times the critical buckling load.

3.11 ENVIRONMENTAL DESIGN OF MECHANICAL AND ELECTRICAL EQUIPMENT

Information showing that safety-related mechanical and electrical equipment is designed to function properly in normal and postulated post-DBE local environments at the Sequoyah Nuclear Plant is presented. A listing of the safety-related equipment that must function to properly mitigate accidents is provided first. Following this is a summary of the normal and worst-case post DBE local environmental conditions that are postulated at plant locations containing Reactor Protection System (RPS) and engineered safety feature (ESF) equipment. Accompanying this summary of worst-case local environments are references to the analyses that defined these circumstances. Environmental design criteria utilized for the RPS and ESF equipment are then given. Policies employed for assuring that properly qualified equipment was installed to perform these safety-related functions are next defined. Following this is an evaluation of the environmental effects that would follow a loss of a plant ventilation system when it is being used for cooling RPS or ESF equipment.

SQN Environmental Design Criteria SQN-DC-V-21.0 (see FSAR 15.5.8, Reference 17) will identify and specify all environmental parameters associated with normal/abnormal and DBA plant conditions necessary for design, procurement, and qualification of equipment. Each reload fuel evaluation will verify that the consequences of an accident previously evaluated has not increased.

3.11.1 Equipment Identification

Safety-related mechanical and electrical equipment that must function to properly mitigate accident effects is listed in Table 3.11.1-1.

3.11.2 Environmental Design and Analyses

Environmental design and analyses ensure that engineered safety feature equipment capabilities are compatible with their particular operating environments. Initially, environmental design criteria were obtained from analyses of specific situations that could occur at specific plant locations containing RPS or ESF equipment. These findings then became a basis for ESF system design and component selection. Additionally, electric equipment in the scope of 10CFR50.49 is included in the SQN 10CFR50.49 Environmental Qualification Program.

3.11.2.1 Environmental Design Criteria

Two different approaches were followed in establishing environmental design criteria for RPS and ESF equipment. One of these included a survey of the environmental qualifications of available components suitable for use in such systems, the selection of appropriate environmental design limits and the sizing of environmental control equipment to maintain acceptable conditions for the RPS and ESF equipment during the worst possible set of circumstances. The other approach utilized to establish environmental design criteria began with a series of analyses of various plant operations, accident condition and naturally occurring outside environment extremes and concluded with a review of the analytical results and adoption of the worst case situation as the environmental design criteria for ESF equipment installed at that particular plant location.

Environmental parameters postulated for normal/abnormal and post-DBE conditions are presented in detail in the SQN Environmental Design Criteria SQN-DC-V-21.0 and provide the basis for procurement, design, and qualification of ESF and RPS equipment at SQN.

3.11.2.2 Environmental Design Criteria for ESF Equipment

Safety-related equipment were designed for the worst case postulated environment. Such environments are given as a function of plant location in the SQN Environmental Design Criteria SQN-DC-V-21.0. All environmental parameters necessary for procurement, design, and qualification of equipment in accordance with 10CFR50.49 are specified on this design criteria.

3.11.2.3 Environmental Design of ESF Components

ESF Systems and RPS components have established industrial ratings equal to or in excess of the required environmental capabilities. These environmental capabilities are demonstrated by testing or by appropriate analyses. 10 CFR50.49 scope equipment is addressed under the harsh environment qualification program (see Section 3.11.2.4).

Qualification of other equipment important to safety is addressed by design/purchase specifications, functional requirements, and associated environmental conditions. Periodic maintenance and surveillance adequately demonstrates qualification of equipment in mild environments.

Additional information on the qualification of 10CFR50.49 scope equipment is provided in Section 3.11.2.4.

3.11.2.4 Environmental Design of 10CFR50.49 Scope Equipment

Electric equipment determined to be in the scope of 10CFR50.49 is included in the SQN 10CFR50.49 Environmental Qualification (EQ) Program. This program ensures that a listing of equipment is maintained and that there exists an auditable documentation package demonstrating harsh environment qualification in accordance with 10CFR50.49 criteria.

3.11.3 Loss of Ventilation

All plant locations containing ESF equipment that need a controlled environment to perform the required accident mitigation operations are served by fully redundant environmental control facilities. Such redundancy assures that no loss of ESF function will occur from a single failure or equipment provided for controlling the local environment for ESF equipment. Data provided in the SQN Environmental Design Criteria SQN-DC-V-21.0 (See FSAR 15.5.8, Reference 17) for controlled local environmental conditions during accidents is valid for situations in which a single loss of ventilation has occurred.

Table 3.11.1-1 (Sheet 1)

ELECTRICAL AND MECHANICAL EQUIPMENT REQUIRED TO FUNCTION DURING AND/OR AFTER AN ACCIDENT

ESF System	Equipment Required to Function
Reactor Protection System	Pressurizer Level and Pressure Transmitters, Steam Line Flow Transmitters, Narrow and Wide Range RTDs for Reactor Coolant System, Narrow Range Steam Generator Level, Reactor Coolant System Flow Transmitters, Wide Range Reactor Coolant System Pressure Transmitters,.
Ice Condenser	Ice compartment doors and door jambs, ice bed, and ice bed structural supports.
Containment Air Return Fan	Air return motor and fan, hydrogen collector ducting backflow damper, power and control circuitry
Containment Spray System	Piping, heat exchanger valves, spray header and nozzles, pump, and motor
Containment Isolation System	Accident sensors and monitors, electrical cables, electrical penetrations, mechanical penetrations, airlocks, hatches, blind flanges
Emergency Power System	Diesel generators, batteries, transformers, relay boards, electrical cables
Emergency Core Cooling System	Accumulators, isolation valves, pump and motor assemblies, tanks, pipes, heat exchangers, motor operated valves, other valves, cabling for equipemnt power control and instrumentation.
Essential Raw Cooling Water	Pumps, valves, pipes, heat exchangers, strainers, lower compartment coolers
Component Cooling Water System	Pump and motor assemblies, valves, heat exchangers, surge tank, pipe
Emergency Gas Treatment System	Air cleanup units, ducts, fans, damper assemblies, valves, filters and adsorbers, instrumentation and controls, heaters
Containment Air Cooling System	Lower compartment coolers (fans)

Table 3.11.1-1 (Sheet 2)

ELECTRICAL AND MECHANICAL EQUIPMENT REQUIRED TO FUNCTION DURING AND/OR AFTER AN ACCIDENT

ESF System	Equipment Required to Function
Auxiliary Building Gas Treatment System	Air cleanup units, ducts, fans and motors, dampers, valves, filters, adsorbers, instrumentation and controls, heaters
Auxiliary Building Isolation Equipment	Isolation dampers, airlocks, secondary containment electrical and mechanical penetration seals, instrumentation
Auxiliary Building Shutdown Board Rm Air Cond. System	Fans, motors, ducts, dampers, air-handling units, water chillers, pumps, valves
Control Building Air Conditioning and Air Cleanup System	Fans, motors, ducts, dampers, condensing units, air-handling units, filters, valves and adsorbers
Auxiliary Building 480-V Board Rm Air Cond. System	Fans, motors, ducts, dampers, air-handling units, condensers, valves, and compressors.
Auxiliary Building Safety Feature Equipment Coolers	Fans, motors, ducts, valves and dampers
Diesel Generator Building Diesel Room Ventilation System	Fans, motors, ducts, and dampers
Auxiliary Feedwater System	Pumps, motors, turbine, valves, instrumentation & controls
Main Steam System	Valves

3.12 Control of Heavy Loads

3.12.1 Introduction/Licensing Background

The Control of Heavy Loads program at SQN was established through a number of letters submitted to the NRC. These submittals include:

- Letter from L.M. Mills (TVA) to E. Adensam (NRC) dated March 1, 1982 (A27 820301 034)
- Letter from L.M. Mills (TVA) to E. Adensam (NRC) dated February 25, 1983 (A27 830225 024)
- Letter from L.M. Mills (TVA) to E. Adensam (NRC) dated February 28, 1984 (A27 840228 012)
- Letter from L.M. Mills (TVA) to E. Adensam (NRC) dated July 27, 1984 (A27 840727 010)
- Letter from L.M. Mills (TVA) to E. Adensam (NRC) dated December 7, 1984 (L44 841207 807)

In response to these submittals, the NRC issued a Safety Evaluation Report (SER) on the Control of Heavy Loads at SQN. This SER was transmitted to TVA by a letter from T. M. Novak (NRC) to H.G. Parris (NRC) dated March 26, 1985 (L44 850403 263).

Subsequent to the SER, the following letters contained amendments to the original SER affecting the Control of Heavy Loads:

- Letter from Suzanne Black (NRC) to Oliver D. Kingsley (TVA) dated December 5, 1988 (A02 881212 001)

- Letter from Suzanne Black (NRC) to Oliver D. Kingsley (TVA) dated May 26, 1989 (A02 890601 006)

- Letter from David E. LaBarge (NRC) to Oliver D. Kingsley (TVA) dated June 14, 1995 (L44 950622 001)

3.12.2 Safety Basis

The safety basis for the Control of Heavy Loads is provided by assuring the risks associated with load-handling failures is acceptably low. This assurance is provided by meeting the requirements of NUREG 0612, Section 5.1.1, the use of an equivalent single-failure-proof crane for the reactor head lift, and the use of a single-failure-proof crane for dry cask lifts in the auxiliary building.

3.12.3 Scope of Heavy Load Handling Systems

A heavy load for SQN is defined as any load weighing in excess of 2,100 lbs that is lifted in an area designated as a critical lift zone. Critical lift zones are those where an overhead handling system exists and the potential exists for a dropped load to impact irradiated fuel, impact safe shutdown equipment, or damage equipment required for spent fuel cooling. Overhead handling systems that meet these criteria are:

- Polar Crane
- Auxiliary Building Crane
- ERCW Hydraulic Pedestal Crane

In addition, over one hundred overhead handling systems were reviewed and excluded from this list on the basis that a load drop would not result in damage to any system required for plant shutdown or decay heat removal for one of the following reasons:

1. There is sufficient physical separation of the overhead handling system from any system or component required for safe shutdown or decay heat removal.

2. The system or component over which the load is carried is out of service while the load handling system is used.

3. The load weighs less than 2,100 lbs and is not considered to be a heavy load.

3.12.4 Control of Heavy Loads Program

The Control of Heavy Loads Program consists of the following:

1. SQN commitments in response to NUREG-0612, Section 5.1.1 elements

2. For Reactor Pressure Vessel Head (RPVH) lifts, an equivalent single-failure-proof crane

3. For spent fuel cask lifts over the spent fuel pool, a single-failure-proof crane

3.12.4.1 SQN Commitments in Response to NUREG 0612, Section 5.1.1

The control of heavy loads is performed by compliance with the seven guidelines outlined in NUREG 0612, Section 5.1.1.

These guidelines are met through the following:

Guideline	Compliance Method
1	Safe load paths - Safe load paths are contained in maintenance instructions. Directions contained within these instructions provide requirements for control of any lift greater than 2,100 pounds, lifts in the auxiliary building, lifts in the upper compartments of the reactor buildings, and lifts at the ERCW pumping station in those areas designated as critical lifting zones (CLZ). The critical lifting zones are defined as follows: Reactor building critical lifting zone - the region inside the polar crane wall of the upper compartment when there is fuel in the reactor or cavity pool and at least one of the horizontal reactor cavity missile shields has been removed. Spent fuel pit critical lifting zone - the region whose boundaries are defined by the limit switches and mechanical stops on the 125 ton Auxiliary Building Crane. The Spent Fuel Pit CLZ is expanded when there is spent fuel being transferred in the Fuel Transfer Canal or when a cask is being loaded with spent fuel or when spent fuel assemblies are stored in the cask loading area. Dry cask lift critical lifting zone - encompasses areas in the Auxiliary Building from elevation 706' railroad bay to elevation 734' refueling floor. ERCW pumping station critical lifting zone - area over Quality and/or Safety Related equipment within the ERCW pumping station. Auxiliary building critical lifting zone - the region within 15 feet of the residual heat removal and containment spray heat exchanger hatches when the hatch plugs have been removed and the heat exchangers are in service. Any area in which temporary hoists and rigging must be used for lifts greater than 2100 pounds over operable quality and/or safety related equipment. To control load movement, maintenance instructions direct the crane operator to raise and transfer the load to its destination, following safe load paths which have been designated in the instructions. To ensure that the established load paths are followed, all lifts performed per these instructions are done under the supervision of a designated individual (person-in-charge) who will verify the load path is clear prior to load movement. Deviations from approved load paths require prior approval of the plant operations review committee (PORC).

2 Procedures - Load handling procedures for the reactor building crane and the auxiliary building crane are contained in maintenance instructions. These instructions contain sections covering scope of control, references, prerequisites, precautions and limitations, acceptance criteria, performance, inspections, tables of approved heavy load lifts, and drawings identifying safe load paths. Tables of the various approved heavy load lifts identify the crane to be used, approved rigging or lifting devices, component weights, and reference drawings and procedures.

3 Crane Operators - Programs for crane operator training, qualification, and conduct are contained in TVA Safety Procedures. The training programs include:
Operating Practices and Functional Characteristics
Rigging Fundamentals
Electrical Maintenance
Certification Skills for Overhead cab-operated Cranes
These training programs incorporate all of Chapter 2.2 of ANSI (ASME) B30.2.

4 Special lifting devices - SQN Special Lifting Devices are the reactor pressure vessel head lift rig and internals lift rig. Qualification of these devices is provided by WCAP 10346. Inspection of these lift rigs is performed on a 10 year interval using Acoustic Emission Testing (AET). Acceptance of Acoustic Emission Testing for the lift rigs in lieu of the requirements of ANSI N14.6 was accepted by the NRC in a letter dated October 1, 1991 (A02 911007 002).

5 Lifting devices that are not specially designed - All slings and other lifting devices not specially designed used with cranes subject to NUREG 0612, Section 5.1, are designed, inspected, and tested in accordance with ANSI (ASME) B30.9 or ANSI N14.6, respectively. Evaluation of dynamic loads imposed by handling systems has been performed to determine if specialized selection and markings are required. Only one crane (ERCW 20 ton hydraulic pedestal crane) was determined to generate dynamic loads in excess of 15% of rated load. The only below-the-hook lifting device used with this crane is the stoplog lifting beam, which has been evaluated and shown to comply with the necessary design requirements. No special markings or selection criteria are necessary for the slings.

6 The crane should be inspected, tested, and maintained in accordance with Chapter 2-2 of ANSI B30.2-1976 - Cranes and hoists at SQN are inspected, tested, and maintained in accordance with specific site maintenance (MI) and preventative maintenance (PM) instructions which implement the requirements of the applicable ANSI (ASME) standard. Each handling system as listed below has its own unique instruction or procedure to control inspection and testing. The load handling system and applicable standard are as follows:

Handling System	Procedure	Reference Standard
Polar Crane	MI	ANSI B30.2-1976
Auxiliary Building Crane	MI	ANSI B30.2-1976
ERCW Hydraulic Pedestal Crane	PM	ANSI B30.15-1973

7 The crane should be designed to meet the applicable criteria and guidelines of Chapter 2-1 of ANSI B30.2-1976 and CMAA-70 - The actual design data for the auxiliary building crane and the reactor building crane were compared with the guidelines of CMAA-70 and ANSI (ASME) B30.2. Where specific compliance was not evident by review, an evaluation was made by imposing these guidelines on the actual design. Principally, this was the approach used for evaluating the design of major structural components by using load combinations and allowable stresses given in CMAA-70. The results of this review and analysis indicate that both cranes meet or exceed the requirements of CMAA-70 and ANSI (ASME) B30.2.
The remaining overhead handling system subject to compliance with NUREG-0612, is the ERCW hydraulic pedestal crane, which has been verified to be compliant with applicable industry standards.

3.12.4.2 Reactor Pressure Vessel Head (RPVH) Lifting Procedures

SQN maintenance instructions are used to control the removal and replacement of the reactor pressure vessel head. These instructions and TVA Safety Procedures contain requirements to ensure the single-failure-proof equivalency of the reactor building crane is maintained. These requirements include:

- Upper containment temperature is at least 70°F
- Periodic (at start of refueling outage) inspection of the crane has been completed. This inspection includes a check of the drum bearings as required by NEI 08-05 for a crane not equipped with drum safety plates.
- All safety functions of the crane are verified to be operational prior to performing the lift (per NEI 08-05).

The SQN reactor building crane was evaluated against NUREG 0554 as part of the station response to NUREG 0612, Section 5.1.3 (1) (and thus Section 5.1.6) compliance. This evaluation indicated that the crane is equipped with numerous single-failure-proof features. These features, as also described in part in FSAR Section 3.8.6.1, include:

- Master Switches with Spring Return to Off Feature
- Cab Mounted Emergency Stop Button
- Floor Mounted Emergency Stop Buttons
- Overload Protection
- Overspeed Detection
- Dual Wire Ropes with a Factor of Safety Between 5:1 and 10:1
- Two independent Holding Brakes of at least 125% of head lift hoisting torque each. Brakes apply automatically when power is removed from the hoisting motor.
- Dual interconnected gear trains
- Two Upper Limits Switches (2nd upper limit switch is a power disconnect)
- Stress Limits meet CMAA 70-1975
- Designed for Safe Shutdown Earthquake with the Maximum Critical Load

The reactor building crane is not furnished with drum safety plates and the wire rope does not provide a 10:1 factor of safety against breaking strength for the rated load. Thus, the reactor building crane is not fully single-failure-proof.

NEI 08-05 defines the requirements for an equivalent single-failure-proof crane for the purposes of lifting the reactor head. In addition to having the required safety features, the following equivalency measures are provided for the reactor head lift -

- Crane is a Class C design with a design margin of between 8% and 15%
- Drum bearings are inspected as part of the annual (periodic) inspection
- Ambient air temperature is at least 70° F
- All safety functions of the crane are verified to be operational prior to performing the lift
- Direct communications are provided between the Crane Operator, Person-In-Charge and Signal Person via headsets
- Emergency stop buttons are manned during lift
- Backup Emergency Stop Signal is provided
- Pre-job brief performed that includes identification of supervisory oversight, establishment of lift management protocol, acceptable travel limits of crane, verification of emergency stop button locations, and manning of emergency stop buttons
- Maintenance rule (a)(4) measures addressed in outage safety plan

With the equivalency measures provided in NEI 08-05, the reactor building crane is equivalent to single-failure-proof based for lifting the reactor head.

3.12.5 Safety Evaluation

Heavy load lifts at SQN are done safely and in accordance with NUREG 0612. Basis is provided by:

- Controls implemented by NUREG 0612, Section 5.1.1, make the risk of a load drop very unlikely.
- The use of an equivalent single-failure-proof crane makes the risk of a reactor head load drop extremely unlikely and acceptably low.
- The risk associated with the movement of heavy loads is evaluated and controlled by station maintenance instructions and the outage safety plan.

3.13 Flex Response System

3.13.1 Flex Response System Mitigation of Beyond Design Basis External Events

TVA has developed and installed diverse and flexible mitigation strategies (FLEX) that will increase defense-in-depth for beyond design basis scenarios to address an extended loss of alternating current power and loss of normal access to the ultimate heat sink occurring simultaneously at Units 1 and 2. This development is in response to orders from the Nuclear Regulatory Commission regarding the Fukushima Daiichi, Japan nuclear accident and is further described in SQN-DC-V-48.0; Reference 3.13.2. The FLEX Response System components are designed to interface with existing safety related components. FLEX connections to plant systems are described in Reference 3.13.2.

3.13.2 Reference

SQN-DC-V-48.0, FLEX Response Systems Design Criteria

TABLE OF CONTENTS

Section	Title	Page
4.0	REACTOR	
4.1	SUMMARY DESCRIPTION	4.1-1
4.1.1	REFERENCE	4.1-3
4.2	MECHANICAL DESIGN	4.2-1
4.2.1	FUEL	4.2-1
4.2.1.1	Design Bases	4.2-2
4.2.1.2	Design Description	4.2-5
4.2.1.3	Design Evaluation	4.2-10
4.2.1.4	Testing and Inspection Plan	4.2-19
4.2.2	REACTOR VESSEL INTERNALS	4.2-22
4.2.2.1	Design Bases	4.2-22
4.2.2.2	Description and Drawings	4.2-23
4.2.2.3	Design Loading Conditions	4.2-27
4.2.2.4	Design Loading Categories	4.2-28
4.2.2.5	Design Criteria Basis	4.2-29
4.2.3	REACTIVITY CONTROL SYSTEM	4.2-29
4.2.3.1	Design Bases	4.2-29
4.2.3.2	Design Description	4.2-32
4.2.3.3	Design Evaluation	4.2-42
4.2.3.4	Tests, Verification, and Inspections	4.2-49
4.2.3.5	Instrumentation Applications	4.2-51
4.2.4	REFERENCES	4.2-51
4.3	NUCLEAR DESIGN	4.3-1
4.3.1	DESIGN BASES	4.3-1
4.3.1.1	Fuel Burnup	4.3-2
4.3.1.2	Negative Reactivity Feedbacks (Reactivity Coefficient)	4.3-2
4.3.1.3	Control of Power Distribution	4.3-3
4.3.1.4	Maximum Controlled Reactivity Insertion Rate	4.3-4
4.3.1.5	Shutdown Margins	4.3-4
4.3.1.6	Stability	4.3-5
4.3.1.7	Anticipated Transients Without Trip	4.3-6
4.3.2	DESCRIPTION	4.3-6
4.3.2.1	Nuclear Design Description	4.3-6
4.3.2.2	Power Distributions	4.3-7
4.3.2.3	Reactivity Coefficients	4.3-18
4.3.2.4	Control Requirements	4.3-22
4.3.2.5	Control	4.3-24
4.3.2.6	Control Rod Patterns and Reactivity Worth	4.3-26
4.3.2.7	Criticality of Fuel Assemblies	4.3-27
4.3.2.8	Stability	4.3-30
4.3.2.9	Vessel Irradiation	4.3-34

TABLE OF CONTENTS

Section	Title	Page
4.3.3	ANALYTICAL METHODS	4.3-34
4.3.3.1	Fuel Temperature (Doppler) Calculations	4.3-35
4.3.3.2	Macroscopic Group Constants	4.3-36
4.3.3.3	Spatial Few-Group Diffusion Calculations	4.3-36
4.3.4	REFERENCES	4.3-38
4.4	THERMAL AND HYDRAULIC DESIGN	4.4-1
4.4.1	DESIGN BASES	4.4-1
4.4.1.1	Departure from Nucleate Boiling Design Basis	4.4-1
4.4.1.2	Fuel Temperature Design Basis	4.4-2
4.4.1.3	Core Flow Design Basis	4.4-3
4.4.1.4	Hydrodynamic Stability Design Bases	4.4-3
4.4.1.5	Other Considerations	4.4-3
4.4.2	DESCRIPTION	4.4-4
4.4.2.1	Summary Comparison	4.4-4
4.4.2.2	Fuel and Cladding Temperatures (Including Densification)	4.4-4
4.4.2.3	Critical Heat Flux Ratio or Departure from Nucleate Boiling Ratio and Mixing Technology	4.4-7
4.4.2.4	Flux Tilt Considerations	4.4-11
4.4.2.5	Void Fraction Distribution	4.4-11
4.4.2.6	Core Coolant Flow Distribution	4.4-11
4.4.2.7	Core Pressure Drops and Hydraulic Loads	4.4-12
4.4.2.8	Correlation and Physical Data	4.4-13
4.4.2.9	Thermal Effects of Operational Transients	4.4-15
4.4.2.10	Uncertainties in Estimates	4.4-15
4.4.2.11	Plant Configuration Data	4.4-17
4.4.3	EVALUATION	4.4-18
4.4.3.1	Core Hydraulics	4.4-18
4.4.3.2	Influence of Power Distribution	4.4-19
4.4.3.3	Core Thermal Response	4.4-21
4.4.3.4	Analytical Techniques	4.4-21
4.4.3.5	Hydrodynamic and Flow Power Coupled Instability	4.4-23
4.4.3.6	Temperature Transient Effects Analysis	4.4-24
4.4.3.7	Potentially Damaging Temperature Effects During Transients	4.4-25
4.4.3.8	Energy Release During Fuel Element Burnout	4.4-25
4.4.3.9	Energy Release or Rupture of Waterlogged Fuel Elements	4.4-26
4.4.3.10	Fuel Rod Behavior Effects from Coolant Flow Blockage	4.4-26
4.4.4	TESTING AND VERIFICATION	4.4-27
4.4.4.1	Tests Prior to Initial Criticality	4.4-27
4.4.4.2	Initial Power and Plant Operation	4.4-27
4.4.4.3	Component and Fuel Inspections	4.4-28

TABLE OF CONTENTS

Section	Title	Page
4.4.5	INSTRUMENTATION APPLICATION	4.4-28
4.4.5.1	Incore Instrumentation	4.4-28
4.4.5.2	Overtemperature and Overpower ΔT Instrumentation	4.4-28
4.4.5.3	Instrumentation to Limit Maximum Power Output	4.4-28
4.4.6	REFERENCES	4.4-29
4.5	REACTOR (HTP AND MARK-BW FUEL)	4.5-1
4.5.1	SUMMARY DESCRIPTION	4.5-1
4.5.1.1	References	4.5-2
4.5.2	MECHANICAL DESIGN	4.5-3
4.5.2.1	Fuel	4.5-3
4.5.2.2	Reactor Vessel Internals	4.5-31
4.5.2.3	Reactivity Control System	4.5-31
4.5.2.4	References	4.5-32
4.5.3	NUCLEAR DESIGN	4.5-34
4.5.3.1	Design Bases	4.5-34
4.5.3.2	Description	4.5-36
4.5.3.3	Analytical Methods	4.5-45
4.5.3.4	References	4.5-46
4.5.4	THERMAL AND HYDRAULIC DESIGN	4.5-47
4.5.4.1	Design Bases	4.5-47
4.5.4.2	Description of Thermal and Hydraulic Design of the Reactor Core	4.5-49
4.5.4.3	Evaluation	4.5-57
4.5.4.4	Testing and Verification	4.5-63
4.5.4.5	Instrumentation Application	4.5-64
4.5.4.6	References	4.5-64

LIST OF TABLES

Number	Title
4.1-1	Reactor Design Comparison Table
4.1-2	Analytic Techniques in Core Design
4.1-3	Design Loading Conditions for Reactor Core Components
4.2.2-1	Maximum Deflections Allowed for Reactor Internal Support Structures
4.3.2-1	Reactor Core Description
4.3.2-2	Nuclear Design Parameters
4.3.2-3	Reactivity Requirements for Rod Cluster Control Assemblies
4.3.2-4	Axial Stability Index PWR Core with a 12-Ft. Height
4.3.2-5	Typical Neutron Flux Levels at Full Power
4.3.2-6	Comparison of Measured and Calculated Doppler Defects
4.3.2-7	Results of KENO-IV Benchmark Calculations
4.3.2-8	Saxton Core II Isotopics Rod MY, Axial Zone 6
4.3.2-9	Critical Boron Concentrations, HZP, BOL
4.3.2-10	Comparison of Measured and Calculated Rod Worth
4.3.2-11	Comparison of Measured and Calculated Moderator Coefficients at HZP, BOL
4.4.2-1	Reactor Design Comparison Table
4.4.2-2	Thermal-Hydraulic Design Parameters for One of Four Coolant Loops Out of Service
4.4.2-3	Void Fractions at Nominal Reactor Conditions with Design Hot Channel Factors
4.5.1-2	Analytical Techniques in Core Design
4.5.1-3	Design Loading Conditions for Reactor Core Components
4.5.2-1	Post-Irradiation Examination Scope
4.5.2-2	Reactor Coolant System Design Transient Group Core Power History for Fuel Rod Fatigue Analysis
4.5.3-1	Reactor Core Description
4.5.4.2-1	Reactor Design Comparison Table - Four Loops in Operation

LIST OF FIGURES

Number	Title
4.2.1-1	Fuel Assembly Cross Section (17 x 17)
4.2.1-2	Fuel Assembly Outline (17 x 17) - STD
4.2.1-2A	Vantage 5H/STD Assembly Comparison
4.2.1-3	Fuel Rod Schematic
4.2.1-3 Notes	Figure 4.2.1-3 Notes
4.2.1-3A	Vantage 5H/STD Full Rod Comparison
4.2.1-4	Comparison of Thimble Tube with Locking Screw Design
4.2.1-5	Plan View - Mid Grid Expansion Joint Design
4.2.1-6a	Top Grid to Nozzle Attachment
4.2.1-6b	Top Grid to Nozzle Attachment
4.2.1-7a	Plan View of Mid Grid to Guide Thimble Joint - VANTAGE 5H
4.2.1-7b	Elevation View of Mid Grid Guide Thimble Joint-V5H
4.2.1-7c	Elevation view Grid to Thimble Attachment-STD
4.2.1-8	Guide Thimble to Bottom Nozzle Joint
4.2.1-9	Schematic Representation of Reactor Core Model
4.2.1-10	Removable Rod Compared to Standard Rod
4.2.1-11	Removable Fuel Rod Assembly Outline (Conceptual)
4.2.1-12	Location of Removable Rods Within an Assembly
4.2.2-1	Lower Core Support Structure (Core Barrel Assembly)
4.2.2-2	Upper Core Support Structure
4.2.2-3	UHI Support Column
4.2.2-4	Plan View of Upper Core Support Structure
4.2.2-5	Rod Cluster Control Assembly and Drive Rod Assembly with Interfacing Components

LIST OF FIGURES (Continued)

Number	Title
4.2.3-1	Rod Cluster Control Assembly Outline
4.2.3-2	Standard Burnable Absorber Assembly
4.2.3-2A	Burnable Absorber Rod Assembly
4.2.3-3	Wet Annular Burnable Absorber
4.2.3-3A	17x17 Wet Annular Burnable Absorber Assembly
4.2.3-3B	Reduced Length Wet Annular Burnable Absorber Rod Assembly
4.2.3-3C	Reduced Length 17X17 Wet Annular Burnable Absorber Rod Assembly
4.2.3-4	Primary Source Assembly
4.2.3-5a	Single Encapsulated Secondary Source Rodlet
4.2.3-5b	Double Encapsulated Secondary Source Rodlet
4.2.3-6	Thimble Plug Assembly
4.2.3-7	Control Rod Drive Mechanism
4.2.3-8	Control Rod Drive Mechanism Schematic
4.2.3-9	Nominal Latch Clearance at Minimum and Maximum Temperature
4.2.3-10	Control Rod Drive Mechanism Latch Clearance Thermal Effect
4.3.2-1	Cycle 1 Fuel Loading Arrangement
4.3.2-2	Production and Consumption of Higher Isotopes
4.3.2-3	Boron Concentration versus First Cycle Burnup With and Without Burnable Absorber
4.3.2-4	Cycle 1 Burnable Absorber Rod Arrangement Within an Assembly
4.3.2-5	Burnable Absorber Loading Pattern for Cycle 1
4.3.2-6	Normalized Power Density Distribution Near Beginning of Life, Unrodded Core, Hot Full Power, No Xenon

LIST OF FIGURES (Continued)

Number	Title
4.3.2-7	Normalized Power Density Distribution Near Beginning of Life, Unrodded Core, Hot Full Power, Equilibrium Xenon
4.3.2-8	Normalized Power Density Distribution Near Beginning of Life, Group D 30% Inserted, Hot Full Power, Equilibrium Xenon
4.3.2-9	Deleted by Amendment 6
4.3.2-10	Normalized Power Density Distribution Near Middle of Life, Unrodded Core, Hot Full Power, Equilibrium Xenon
4.3.2-11	Normalized Power Density Distribution Near End of Life, Unrodded Core, Hot Full Power, Equilibrium Xenon
4.3.2-12	Rodwise Power Distribution in a Typical Assembly (Assembly G-9) Near Beginning of Life, Hot Full Power, Equilibrium Xenon, Unrodded Core
4.3.2-13	Rodwise Power Distribution in a Typical Assembly (G-9) Near End of Life, Hot Full Power, Equilibrium Xenon, Unrodded Core
4.3.2-14	Typical Axial Power Shapes Occurring at Beginning of Life
4.3.2-15	Typical Axial Power Shapes Occurring at Middle-of-Life
4.3.2-16	Typical Axial Power Shapes Occurring at End-of-Life
4.3.2-17	Comparison of a Typical Assembly Axial Power Distribution with Core Average Axial Distribution Bank D Slightly Inserted
4.3.2-18	Flow Chart for Determining Spike Model
4.3.2-19	Predicted Power Spike Due to Single Nonflattened Gap in the Adjacent Fuel
4.3.2-20	Power Spike Factor as a Function of Axial Position
4.3.2-21	Typical Normalized Maximum F_Q x Power versus Axial Height During Normal Operation
4.3.2-22	Typical Peak Power Density During Control Rod Malfunction Overpower Transients
4.3.2-23	Typical Peak Power Density During Boration/Dilution Overpower Transients
4.3.2-24	Comparison Between Calculated and Measured Relative Fuel Assembly Power Distribution

LIST OF FIGURES (Continued)

Number	Title
4.3.2-25	Comparison of Typical Calculated and Measured Axial Shape
4.3.2-26	Measured Values of F_Q for Full Power Rod Configurations
4.3.2-27	Typical Doppler Temperature Coefficient at Beginning of Life and at End of Life, Cycle 1
4.3.2-28	Typical Doppler-Only Power Coefficient at Beginning of Life and at End of Life, Cycle 1
4.3.2-29	Typical Doppler-Only Power Defect Beginning of Life and End of Life, Cycle 1
4.3.2-30	Typical Moderator Temperature Coefficient at Beginning of Life, Cycle 1, No Rods
4.3.2-31	Typical Moderator Temperature Coefficient at End of Life, Cycle 1
4.3.2-32	Typical Moderator Temperature Coefficient as a Function of Boron Concentration at Beginning of Life, Cycle 1, No Rods
4.3.2-33	Typical Hot Full Power Temperature Coefficient During Cycle 1 for the Critical Boron Concentration
4.3.2-34	Typical Total Power Coefficient at Beginning of Life and at End of Life, Cycle 1
4.3.2-35	Typical Total Power Defect at Beginning of Life and End of Life, Cycle 1
4.3.2-36	Rod Cluster Control Assembly Pattern
4.3.2-37	Typical Accidental Simultaneous Withdrawal of Two Control Banks EOL, HZP Banks B and D Moving in the Same Plane
4.3.2-38	RCCA Position vs. Time or Reactor Trip
4.3.2-39	Typical Normalized Rod Worth Versus Percent Insertion, All Rods But One
4.3.2-40	Deleted by Amendment 8.
4.3.2-41	Axial Offset versus Time, PWR Core with a 12-Ft. Height and 121 Assemblies
4.3.2-42	XY Xenon Test Thermocouple Response Quadrant Tilt Difference versus Time
4.3.2-43	Calculated and Measured Doppler Defect and Coefficients at Beginning of Life, Two-Loop Plant, 121 Assemblies, 12-Ft. Core

LIST OF FIGURES (Continued)

Number	Title
4.3.2-44	Comparison of Calculated and Measured Boron Concentration for 2-Loop Plant, 121 Assemblies, 12-Ft. Core
4.3.2-45	Comparison of Calculated and Measured C_B 2-Loop Plant, 121 Assemblies, 12-Ft. Core
4.3.2-46	Comparison of Calculated and Measured C_B 3-Loop Plant, 157 Assemblies, 12-Ft. Core
4.4.2-1	Deleted by Amendment 8
4.4.2-2	Deleted by Amendment 8
4.4.2-3	Thermal Conductivity of $U0_2$ (Data Corrected to 95% Theoretical Density)
4.4.2-4	Deleted by Amendment 13
4.4.2-5	Deleted by Amendment 13
4.4.2-6	TDC versus Reynolds Number for 26-Inch Grid Spacing
4.4.2-7	Normalized Radial Flow and Enthalpy Distribution at 4-Ft. Elevation
4.4.2-8	Normalized Radial Flow and Enthalpy Distribution at 8-Ft. Elevation
4.4.2-9	Normalized Radial Flow and Enthalpy Distribution at 12-Ft Elevation
4.4.2-10	Void Fraction versus Thermodynamic Quality $H - H_{SAT} / H_g - H_{SAT}$
4.4.5-1	Distribution of In-Core Instrumentation
4.5.2-1	Mark-BW Fuel Assembly
4.5.2-2	Mark-BW Fuel Rod Assembly
4.5.2-3	UO_2 Fuel Rod Assembly Lower and Upper End Caps
4.5.2-4	UO_2 Fuel Rod Assembly Upper and Lower Plenum Springs
4.5.2-5A	Mark-BW Bottom Nozzle Assembly
4.5.2-5B	Low Pressure Drop Mark-BW Bottom Nozzle Assembly
4.5.2-6	Bottom Nozzle Guide Thimble Attachment
4.5.2-7A	Mark-BW Top Nozzle Assembly
4.5.2-7B	Low Pressure Drop Mark-BW Top Nozzle Assembly

LIST OF FIGURES (Continued)

Number	Title
4.5.2-8A	Top Nozzle Assembly Guide Thimble Attachment
4.5.2-8B	Low Pressure Drop Top Nozzle Assembly Guide Thimble Attachment
4.5.2-9	Mark-BW Spacer Grid Assembly Detail
4.5.2-10	Upper End Grid Assembly Attachment
4.5.2-11	Lower End Grid Assembly Attachment
4.5.2-12	Intermediate Grid Assembly Restraint System
4.5.2-13	Mark-BW Guide Thimble Pattern
4.5.2-14	Mark-BW Burnable Poison Rod Assembly
4.5.2-15	Mark-BW Burnable Poison Rod
4.5.2-16a	Advanced W17 HTP Fuel Assembly
4.5.2-16b	Advanced W17 HTP Fuel Assembly (top view)
4.5.2-17	Advanced W17 HTP Fuel Rod Assembly
4.5.2-18	UO_2 Fuel Rod Assembly & NAF Rod Assembly Lower and Upper End Caps
4.5.2-19	UO_2 Fuel Rod Assembly & NAF Rod Assembly Lower and Upper Plenum Springs
4.5.2-20	Advanced W17 HTP Bottom Nozzle Assembly
4.5.2-21	Bottom Nozzle Assembly Guide Tube Attachment
4.5.2-22	Advanced W17 HTP Top Nozzle Assembly
4.5.2-23	Top Nozzle Assembly Guide Tube Attachment
4.5.2.24	Advanced W17 HTP Spacer Grid Assembly Detail
4.5.2-25	Advanced W17 HMP Spacer Grid Assembly
4.5.2-26	Advanced W17 IFM Spacer Grid Assembly
4.5.2-27	Advanced W17 HTP Cage Assembly Detail
4.5.4.2-7	Normalized Radial Flow and Enthalpy Distribution at 4-ft Elevation
4.5.4.2-8	Normalized Radial Flow and Enthalpy Distribution at 8-ft Elevation
4.5.4.2-9	Normalized Radial Flow and Enthalpy Distribution at 12-ft Elevation - Core Exit

4.0 REACTOR (WESTINGHOUSE FUEL)

4.1 SUMMARY DESCRIPTION

This section addresses Westinghouse Standard (STD) and Vantage 5H (V5H) fuels. See 4.5.0 for information regarding AREVA fuel. Information concerning the power level uprate associated with the implementation of the Leading Edge Flow Meter is also included in Section 4.5.

This chapter describes 1) the mechanical components of the reactor and reactor core including the fuel rods and fuel assemblies, reactor internals, and the control rod drive mechanisms, 2) the nuclear design, and 3) the thermal-hydraulic design.

The reactor core is comprised of an array of fuel assemblies which are similar in mechanical design, but different in fuel enrichment. Three enrichments were employed in the initial core. Reload cores employ multiple enrichments.

Three Westinghouse fuel designs may be used: (1) STD fuel; (2) V5H fuel; (3) V5H fuel with certain Standard features (V5H with STD inconel grids and the corresponding guide tube diameters). AREVA fuel is also applicable for use and is discussed in Section 4.5.

In the discussion in the remainder of this chapter, the STD and V5H designs are discussed explicitly. Where appropriate, the discussion should be understood to apply to V5H fuel with inconel grids.

The core is cooled and moderated by light water at a pressure of 2250 psia in the Reactor Coolant System. The moderator coolant contains boron as a neutron poison. The concentration of boron in the coolant is varied as required to control relatively slow reactivity changes including the effects of fuel burnup. Additional boron, in the form of Integral Fuel Burnable Absorbers (IFBA) or burnable absorber rods, is employed as needed to decrease the moderator temperature coefficient and to control the power distribution.

Two hundred and sixty-four fuel rods, twenty four guide thimble tubes and one instrumentation thimble tube are arranged within a supporting structure to form a fuel assembly. The instrumentation thimble is located in the center position and provides a channel for insertion of an incore neutron detector and thimble tube if the fuel assembly is located in an instrumented core position. The guide thimbles provide channels for insertion of either a rod cluster control assembly, a neutron source assembly, a burnable absorber assembly or a plugging device, depending on the position of the particular fuel assembly in the core. The fuel rods are supported in intervals along their length by grid assemblies which maintain the lateral spacing between the rods throughout the design life of the assembly. The grid assembly consists of an "egg-crate" arrangement of interlocked straps. The straps contain spring fingers and dimples for fuel rod support as well as coolant mixing vanes.

The fuel rods consist of slightly enriched uranium dioxide, ceramic cylindrical pellets contained in slightly cold worked Zircaloy-4 tubing which is plugged and seal welded at the ends to encapsulate the fuel. All fuel rods are pressurized with helium during fabrication to reduce stresses and strains which serves to increase fatigue life.

The center position in the assembly is reserved for the incore instrumentation, while the remaining 24 positions in the array are equipped with guide thimbles joined to the grids and the

top and bottom nozzles. Depending upon the position of the assembly in the core, the guide thimbles are used as core locations for rod cluster control assemblies, neutron source assemblies, and burnable absorber rods. Otherwise, the guide thimbles may be fitted with plugging devices to limit bypass flow.

The bottom nozzle is a box-like structure which serves as a bottom structural element of the fuel assembly and directs the coolant flow distribution through the assembly. The top nozzle assembly functions as the upper structural element of the fuel assembly in addition to providing a partial protective housing for the rod cluster control assembly or other components.

The rod cluster control assemblies each consist of a group of individual neutron absorber rods fastened at the top end to a common hub or spider assembly, and contain neutron absorber material to control the reactivity of the core under operating conditions.

The control rod drive mechanisms for the rod cluster control assemblies are of the magnetic latch type. The latches are controlled by three magnetic coils. They are so designed that upon a loss of power to the coils, the rod cluster control assembly is released and falls by gravity to shutdown the reactor.

The components of the reactor internals are divided into three parts consisting of the lower core support structure (including the entire core barrel and neutron shield and assembly), the upper core support structure and the incore instrumentation support structure. The reactor internals support the core, maintain fuel alignment, limit fuel assembly movement, maintain alignment between fuel assemblies and control rod drive mechanisms, direct coolant flow past the fuel elements and to the pressure vessel head, provide gamma and neutron shielding, and provide guides for the incore instrumentation.

The nuclear design analyses and evaluation establish physical locations for control rods and burnable absorbers and physical parameters such as fuel enrichments and boron concentration in the coolant. This is to ensure that the reactor core has inherent characteristics which together with corrective actions of the reactor control, protective and emergency cooling systems provide adequate reactivity control. This control is maintained even if the rod cluster control assembly of the highest negative reactivity worth is stuck in the fully withdrawn position (stuck rod criterion).

The thermal-hydraulic design analyses and evaluation establish coolant flow parameters which assure that adequate heat transfer is assured between the fuel cladding and the reactor coolant. The thermal design takes into account local variations in dimensions, power generation, flow distribution and mixing. The mixing vanes incorporated in the fuel assembly spacer grid design induce additional flow mixing between the various flow channels within a fuel assembly as well as between adjacent assemblies.

Core instrumentation is provided internally and externally to monitor the nuclear, thermal-hydraulic, and mechanical performance of the reactor and to provide inputs to automatic control functions.

The reactor core design together with corrective actions of the reactor control protection and emergency cooling systems can meet the reactor performance and safety criteria specified in Section 4.2.

To illustrate the effects of the change in fuel design, Table 4.1-1 "Reference Core Report 17 x 17" WCAP-8185 presents a comparison of the principal nuclear, thermal-hydraulic and mechanical design parameters between the reference 4-loop plant with 17 x 17 fuel assemblies including the effects of fuel densification, and the Trojan Nuclear Plant (Docket 50-344) with 17 x 17 fuel assemblies without fuel densification. Table 4.1-1 of this report presents the same comparisons between Sequoyah units 1 and 2 with the reference plant, both with 17 x 17 fuel assemblies including fuel densification effect.

The effects of fuel densification were evaluated with the methods described in Reference 1.

The analysis techniques employed in the core design are tabulated in Table 4.1-2. The loading conditions considered in general for the core internals and components are tabulated in Table 4.1-3. Specific or limiting loads considered for design purposes of the various components are listed as follows: fuel assemblies in Subparagraph 4.2.1.1.2; reactor internals in Paragraph 4.2.2.3 and Table 5.2-2; neutron absorber rods, burnable absorber rods, neutron source rods and thimble plug assemblies in Subparagraph 4.2.3.1.3; control rod drive mechanisms in Subparagraph 4.2.3.1.4. The dynamic analyses, input forcing functions, and response loadings are presented in Section 3.9.

4.1.1 Reference

1. J. M. Hellman (Ed.), "Fuel Densification Experimental Results and Model for Reactor Operation," WCAP-8218-P-A, March 1975 (Proprietary) and WCAP-8219-A, March 1975 (Non-Proprietary).
2. Davidson, S. L. (ED.), et al, "Vantage 5H Fuel Assembly," WCAP, 10444-P-A, Addendum 2A, April 1988.
3. R. Salvatori, "Reference Core Report 17 x 17," WCAP 8185, December 1973.

TABLE 4.1-1 (Sheet 1)

REACTOR DESIGN COMPARISON TABLE

THERMAL AND HYDRAULIC DESIGN PARAMETERS	SEQUOYAH UNITS 1 & 2 17 X 17 FUEL ASSEMBLY EFFECTS	REFERENCE PLANT 17 X 17 FUEL ASSEMBLY EFFECTS
1. Reactor Core Heat Output MWt	3411	3411
2. Reactor Core Heat Output, Btu/hr	$11,641.7 \times 10^6$	$11,641.7 \times 10^6$
3. Heat Generated in Fuel, %	97.4	97.4
4. System Pressure, Nominal, psia	2250	2250
5. System Pressure, Min. Steady State,psia	2200	2220
6. Minimum DNBR for Design Transients	>1.38	>1.30
DNB Correlation	WRB-1 and "R" (W-3 with Modified spacer factor)	"L" (W-3 with modified spacer factor)
7. Total Thermal Flow Rate, lb/hr	138.0×10^6	132.7×10^6
8. Effective Flow Rate for Heat Transfer, lbm/hr	127.7×10^6	126.7×10^6
9. Effective Flow Area for Heat Transfer, ft^2	51.1	51.1
10. Average Velocity Along Fuel Rods, ft/sec	15.6	15.7
11. Average Mass Velocity, lb/hr-ft^2	2.50×10^6	2.48×10^6
Coolant Temperatures, °F		
12. Nominal Inlet °F	546.7	552.5
13. Average Rise in Vessel °F	63.1	64.2
14. Average Rise in Core °F	67.6	66.9
15. Average in Core °F	582.2	585.9
16. Average in Vessel °F	578.2	584.7
Heat Transfer		
17. Active Heat Transfer, Surface Area, ft^2	59,700	59,700
18. Average Heat Flux, Btu/hr-ft^2	189,800	189,800
19. Maximum Heat Flux for Normal Operation, Btu/hr-ft^2	455,500	474,500[b]
20. Average Thermal Output, kw/ft	5.44	5.44
21. Maximum Thermal Output for Normal Operation, kw/ft	13.0	13.6[b]
22. Peak Linear Power for Determination of Protection Setpoints, kw/ft	18.0[c]	18.0[c]
23. Heat Flux Hot Channel Factor, F_Q	2.40	2.50

(b) This limit is associated with the value of $F_Q = 2.50$
(c) See Subparagraph 4.3.2.2.6

TABLE 4.1-1 (Sheet 2)

REACTOR DESIGN COMPARISON TABLE

THERMAL AND HYDRAULIC DESIGN PARAMETERS	SEQUOYAH UNITS 1 & 2 17 X 17 FUEL ASSEMBLY EFFECTS	REFERENCE PLANT 17 X 17 FUEL ASSEMBLY EFFECTS
Fuel Assemblies		
24. Design	RCC Canless	RCC Canless
25. Number of Fuel Assemblies	193	193
26. UO_2 Rods per Assembly	264	264
27. Rod Pitch, in.	0.496	0.496
28. Overall Dimensions, in.,	8.426 x 8.426	8.426 x 8.426
29. Fuel Weight (as UO_2), pounds for 193 assemblies	222,645	222,739
30. Zircaloy Weight, lbs	52,500	50,913
31. Number of Grids per Assembly	6 V5H zircalloy 2 V5H inconel or 8 STD inconel	8-Type R
32. Loading Technique	3 region non-uniform	3 region non-uniform
Fuel Rods		
33. Number in Core (193 assemblies)	50,952	50,952
34. Outside Diameter, in.	0.374	0.374
35. Diametral Gap, in.	0.0065	0.0065
36. Clad Thickness, in.	0.0225	0.0225
37. Clad Material	Zircaloy-4	Zircaloy-4
Fuel Pellets		
38. Material	UO_2 Sintered	UO_2 Sintered
39. Density (% of Theoretical)	95	95
40. Diameter, in.	0.3225	0.3225
41. Length, in.	0.387	0.530

TABLE 4.1-1 (Sheet 3)

REACTOR DESIGN COMPARISON TABLE

THERMAL AND HYDRAULIC DESIGN PARAMETERS	SEQUOYAH UNITS 1 & 2 17 X 17 FUEL ASSEMBLY EFFECTS	REFERENCE PLANT 17 X 17 FUEL ASSEMBLY EFFECTS
Rod Cluster Control Assemblies		
42. Neutron Absorber, Full and Part Length	Ag-In-Cd	Ag-In-Cd
43. Cladding Material	Type 304 SS-(Westinghouse) 316L SS-(AREVA/Framatome) Cold Worked	Type 304 SS- (Westinghouse) Cold Worked
44. Clad Thickness, in.	0.0185	0.0185
45. Number of Clusters	53*	53
46. Number of Absorber Rods per Cluster	24	24
Core Structure		
47. Core Barrel, I.D./O.D., in.	148.0/152.5	148.0/152.5
48. Thermal Shield, I.D./O.D., in.	158.5/164.0	Neutron Pad Design
49. Weight of each fuel assembly, lbs	1457	1455
NUCLEAR DESIGN PARAMETERS		
Structure Characteristics		
50. Core Diameter, in. (Equivalent)	132.7	132.7
51. Core Average Active Fuel Height, in.	143.7	143.7
Reflector Thickness and Composition		
52. Top - Water plus Steel, in.	10	10
53. Bottom - Water plus Steel, in.	10	10
54. Side - Water plus Steel, in.	15	15
55. H2 O/U, Cold Molecular Ratio Lattice	2.42	2.42
First Core Feed Enrichment, w/o		
56. Region 1	2.10	2.10
57. Region 2	2.60	2.60
58. Region 3	3.10	3.10

*Unit 1 is permitted to operate with 52 control Rod Assemblies (with no Control Rod assembly installed in core location H-8) during U1C24 and U1C25.

*Unit 2 is permitted to operate with 52 Control Rod Assemblies (with no Control Rod Assembly installed in core location H-8) during Unit 2 Cycle 24 (U2C24) and U2C25.

TABLE 4.1-2 (Sheet 1)

ANALYTIC TECHNIQUES IN CORE DESIGN

Analysis	Technique	Computer Code	Section Referenced
Mechanical Design of Core Internals			
Loads, Deflections, and Stress Analysis	Static and Dynamic Modeling	Blowdown code, FORCE Finite element structural analysis code, and others	3.7.2.1 3.9.1 3.9.3
Fuel Rod Design			
Fuel Performance Characteristics (temperature, internal pressure, clad stress, etc.)	Semi-empirical thermal model of fuel rod with consideration of fuel density changes, heat transfer, fission gas release, etc.	Westinghouse fuel rod design model	4.2.1.3.1 4.3.3.1 4.4.2.2 4.4.3.4.2 4.4.3.4.2
Nuclear Design			
1) Cross Sections and Group Constants	Microscopic data	Modified ENDF/B library	4.3.3.2
	Microscopic constants for homogenized core regions	LEOPARD/CINDER type PHOENIX-P	4.3.3.2 4.3.3.2
	Group constants for control rods with self-shielding	HAMMER-AIM	4.3.3.2
2) X-Y Power Distributions, Fuel Depletion, Critical Boron Concentrations, x-y Xenon distributions,	2-D and 3D, 2-Group Diffusion Theory	TURTLE PALADON ANC THURTLE	4.3.3.3

TABLE 4.1-2 (Sheet 2)

ANALYTIC TECHNIQUES IN CORE DESIGN

Analysis	Technique	Computer Code	Section Referenced
Reactivity Coefficients			
3) Axial Power Distributions, Control Rod Worths, and Axial Xenon Distribution	1-D, 2-Group Diffusion Theory	APOLLO	4.3.3.3
4) Pellet Radial Power Distribution	Integral Transport Theory	LASER	4.3.3.1
Effective Resonance Temperature	Monte Carlo Weighting Function	REPAD	
Thermal-Hydraulic Design			
1) Steady-state	Subchannel analysis of local fluid conditions in rod bundles, including inertial and cross-flow resistance terms, solution progresses from core-wide to hot assembly to hot channel	THINC-IV	4.4.3.4.1

TABLE 4.1-2 (Sheet 3)

ANALYTIC TECHNIQUES IN CORE DESIGN

Analysis	Technique	Computer Code	Section Referenced
Thermal-Hydraulic Design (cont.)			
2) Transient DNB Analysis	Subchannel analysis of local fluid conditions in rod bundles during transients by including accumulation terms in conservation equations; solution progresses from core-wide to hot assembly to hot channel	THINC-I (THINC-III)	4.4.3.4.1

TABLE 4.1-3

DESIGN LOADING CONDITIONS FOR REACTOR CORE COMPONENTS

1. Fuel Assembly Weight
2. Fuel Assembly Spring Forces
3. Internals Weight
4. Control Rod Scram (equivalent static load)
5. Differential Pressure
6. Spring Preloads
7. Coolant Flow Forces (static)
8. Temperature Gradients
9. Differences in thermal expansion
    a. Due to temperature differences
    b. Due to expansion of different materials
10. Interference between components
11. Vibration (mechanically or hydraulically induced)
12. One or more loops out of service
13. All Loading Conditions listed in Table 5.2-2
14. Pump overspeed
15. Seismic loads (operation basis earthquake and design basis earthquake)
16. Blowdown forces (due to cold and hot leg break)

4.2 MECHANICAL DESIGN

The plant conditions for design are divided into four categories in accordance with their anticipated frequency of occurrence and risk to the public: Condition I - Normal Operation; Condition II - Incidents of Moderate Frequency; Condition III - Infrequent Incidents; Condition IV - Limiting Faults.

The reactor is designed so that its components meet the following performance and safety criteria:

1. The mechanical design of the reactor core components and their physical arrangement, together with corrective actions of the reactor control, protection, and emergency cooling systems (when applicable) assure that:

    a. Fuel damage (fuel damage as used here is defined as penetration of the fission product barrier: i.e., the fuel rod clad) is not expected during Condition I and Condition II events. It is not possible, however, to preclude a very small number of rod failures. These are within the capability of the plant cleanup system and are consistent with the plant design bases.

    b. The reactor can be brought to a safe state following a Condition III event with only a small fraction of fuel rods damaged although sufficient fuel damage might occur to preclude resumption of operation without considerable outage time.

    c. The reactor can be brought to a safe state and the core can be kept subcritical with acceptable heat transfer geometry following transients arising from Condition IV events.

2. The fuel assemblies are designed to accommodate expected conditions for handling during assembly, inspection and refueling operations, and shipping loads.

3. The fuel assemblies are designed to accept control rod insertions in order to provide the required reactivity control for power operations and reactivity shutdown conditions.

4. All fuel assemblies have provisions for the insertion of incore instrumentation necessary for plant operation.

5. The reactor internals in conjunction with the fuel assemblies direct reactor coolant through the core to achieve acceptable flow distribution and to restrict bypass flow so that the heat transfer performance requirements can be met for all modes of operation. In addition, the internals provide core support and distribute coolant flow to the pressure vessel head so that the temperature differences between the vessel flange and head do not result in leakage from the flange during the Condition I and II modes of operation. Required in-service inspection can be carried out as the internals are removable and provide access to the inside of the pressure vessel.

4.2.1 Fuel

4.2.1.1 Design Bases

The fuel rod and fuel assembly design bases are established to satisfy the general performance and safety criteria presented in Section 4.2 and specific criteria noted below.

4.2.1.1.1 Fuel Rods

The integrity of the fuel rods is ensured by designing to prevent excessive fuel temperatures, excessive internal rod gas pressures due to fission gas releases, and excessive cladding stresses and strains. This is achieved by designing the fuel rods so that the following conservative design bases are satisfied during Condition I and Condition II events over the fuel lifetime:

1. Fuel Pellet Temperatures - The center temperature of the hottest pellet is to be below the melting temperature of the UO_2 (melting point of 5080°F (Reference 1) unirradiated and reducing by 58°F per 10,000 MWD/MTU). While a limited amount of center melting can be tolerated, the design conservatively precludes center melting. A calculated centerline fuel temperature of 4700°F has been selected as an overpower limit to assure no fuel melting. This provides sufficient margin for uncertainties, as described in Paragraph 4.4.1.2 and Subparagraph 4.4.2.10.1.

2. Internal Gas Pressure - The internal gas pressure of the lead rod in the reactor will be limited to a value below that which could cause the diametral gap to increase due to outward clad creep during steady-state operation, and which could cause extensive DNB propagation to occur. (The safety evaluation of the fuel rod internal pressure design basis is presented in Reference 14).

3. Clad Stress - The effective clad stresses are less than that which would cause general yield of the clad. While the clad has some capability for accommodating plastic strain, the yield strength has been accepted as a conservative design basis.

4. Clad Tensile Strain - The clad tangential strain range is less than one percent. The clad strain design basis addresses slow transient strain rate mechanisms where the clad effective stress never reaches the yield strength due to stress relaxation. The 1% strain limit has been established based upon tensile and burst test data from irradiated clad. Irradiated clad properties are appropriate due to irradiation effects on clad ductility occurring before strain limiting fuel clad interaction during a transient event can occur.

5. Strain Fatigue - The cumulative strain fatigue cycles are less than the design strain fatigue life. This basis is consistent with proven practice.

The effective clad stress is less than that which would cause general yield of the clad. While the clad has some capability for accommodating plastic strain, the yield strength has been accepted as a conservative design basis limit.

Radial, tangential, and axial stress components due to pressure differential and fuel clad contact pressure are combined into an effective stress using the maximum-distortion-energy theory. The Von Mises criterion is used to evaluate if the yield strength has been exceeded. Von Mises criterion states that an isotropic material under multiaxial stress will begin to yield plastically when the effective stress (i.e., combined stress using maximum-distortion-energy theory)

becomes equal to the material yield stress in simple tension as determined by a uniaxial tensile test. Since general yielding is to be prohibited, the volume average effective stress determined by integrating across the clad thickness is increased by an allowance for local non-uniformity effects before it is compared to the yield strength. The yield strength correlation is that appropriate for irradiated clad since the irradiated properties are attained at low exposure whereas the fuel/clad interaction conditions which can lead to minimum margin to the design basis limit always occurs at much higher exposure.

The fuel rods are designed for extended burnup operation using the NRC approved Westinghouse extended burnup design methods, models and criteria in References 5, 6, and 18. The detailed fuel rod design establishes such parameters as pellet size and density, clad-pellet diametral gap, gas plenum size, and helium pre-pressure. The design also considers effects such as fuel density changes, fission gas release, clad creep, and other physical properties which vary with burnup.

Irradiation testing and fuel operational experience has verified the adequacy of the fuel performance and design bases. This is discussed in Reference 2, 3, and 18. Fuel experience and testing results, as they become available, are used to improve fuel rod design and manufacturing processes and assure that the design bases and safety criteria are satisfied.

4.2.1.1.2 Fuel Assembly Structure

Structural integrity of the fuel assemblies is assured by setting limits on stresses and deformations due to various loads and by determining that the assemblies do not interfere with the functioning of other components. Three types of loads are considered.

1. Non-operational loads such as those due to shipping and handling,

2. Normal and abnormal loads which are defined for Conditions I and II,

3. Abnormal loads which are defined for Conditions III and IV.

These criteria are applied to the design and evaluation of the top and bottom nozzles, the guide thimbles, the grids and the thimble joints.

The design bases for evaluating the structural integrity of the fuel assemblies are:

1. Non-Operational - dimensional stability, under specified g loading

2. Normal Operation (Condition I) and Incidents of Moderate Frequency (Condition II),

   For the normal operating (Condition I) and upset conditions (Condition II), the fuel assembly component structural design criteria are classified into two material categories, namely, austenitic steels and zircaloy. The stress categories and strength theory presented in the ASME Boiler and Pressure Vessel Code, Section III, are used as a general guide. The maximum shear-theory (Tresca criterion) for combined stresses is used to determine the stress intensities for the austenitic steel components. The stress intensity is defined as the numerically largest difference between the various principal stresses in a three dimensional

field. The allowable stress intensity value for austenitic steels, such as, nickel-chromium-iron alloys, is given by the lowest of the following:

a. 1/3 of the specified minimum tensile strength or 2/3 of the specified minimum yield strength at room temperature;

b. 1/3 of the tensile strength or 90 percent of the yield strength at temperature but not to exceed 2/3 of the specified minimum yield strength at room temperature.

The stress intensity limits for the austenitic steel components are listed below. All stress nomenclature is per ASME Boiler and Pressure Vessel Code, Section III.

Categories	Limit
General Primary Membrane Stress Intensity	Sm
Local Primary Membrane Stress Intensity	1.5 Sm
Primary Membrane plus Bending Stress Intensity	1.5 Sm
Total Primary plus Secondary Stress Intensity	3.0 Sm

The zircaloy structural components which consist of guide thimble, inner six grids (for V5H fuel), and fuel tubes are in turn subdivided into two categories because of material differences and functional requirements. The fuel tube design criteria is covered separately in Subparagraph 4.2.1.1.1. The maximum stress theory is used to evaluate the guide thimble design. The maximum stress theory assumes that yielding due to combined stresses occur where one of the principal stresses are equal to the simple tensive or compressive yield stress. The zircaloy unirradiated properties are used to define the stress limits.

3. Abnormal loads during Conditions III or IV - worst cases represented by combined seismic and blowdown loads.

   a. Deflections of components cannot interfere with the reactor shutdown or emergency cooling of the fuel rods.

   b. The fuel assembly structural component stresses under faulted conditions are evaluated using primarily the methods outlined in Appendix F of the ASME Pressure Vessel Code Section 3. Since the current analytical methods utilize elastic analysis, the stress allowables are defined as the smaller value of 2.4 Sm or 0.70 Su for primary membrane and 3.6 Sm or 1.05 Su for primary membrane plus primary bending. For the austenitic steel fuel assembly components, the stress intensity is defined in accordance with the rules described in the previous section for normal operating conditions. For the zircaloy components the stress limits are set at two-thirds of the material yield strength, Sy, at reactor operating temperature. This results in zircaloy stress intensity limits being the smaller of 1.6 Sy or 0.70 Su for primary membrane and 2.4 Sy or 1.05 Su for primary membrane plus bending. For conservative purposes, the zircaloy unirradiated properties are used to define the stress limits.

The grid component strength criteria are based on experimental tests. The limit is established at Pc where Pc is the experimental collapse load determined at the 95% confidence level on the true mean, as taken from the distribution of grid crush test measurements.

4.2.1.2 Design Description

The standard fuel assembly and fuel rod design data are given in Table 4.1-1. NRC approval of the VANTAGE 5H design is given in Reference 19.

Two hundred and sixty-four fuel rods, twenty-four guide thimble tubes and one instrumentation thimble tube are arranged within a supporting structure to form a fuel assembly. The instrumentation thimble is located in the center position and provides a channel for insertion of an incore neutron detector and thimble tube if the fuel assembly is located in an instrumented core position. The guide thimbles provide channels for insertion of either a rod cluster control assembly, a neutron source assembly, a burnable absorber assembly or a plugging device, depending on the position of the particular fuel assembly in the core. Figure 4.2.1-1 shows a cross-section of the fuel assembly array, and Figure 4.2.1-2 and Figure 4.2.1-2a show fuel assembly full length outlines. The fuel rods are loaded into the fuel assembly structure so that there is clearance between the fuel rod ends and the top and bottom nozzles.

Shown in Figure 4.2.1-2a is a comparison of the two assembly designs noting respective overall height and grid elevation dimensions. The most significant design change associated with the VANTAGE 5H assembly, is the use of Zircaloy grids to replace the six intermediate STD Inconel grids. The guide thimbles and instrumentation tube diameters are reduced to accommodate this change. The VANTAGE 5H assembly incorporates the reconstitutable top nozzle (RTN) design and uses a slightly longer fuel rod with a redesigned reconstitutable bottom end plug. The debris filter bottom nozzle (DFBN) is also used and is similar to the STD assembly design except it is lower in height and has a new pattern of smaller flow holes in its thinner top plate. This design minimizes passage of debris particles which could cause fretting damage to fuel rod cladding.

The VANTAGE 5H fuel assembly has the same cross-sectional envelope as the STD assembly, however, it is 0.210 inches longer overall. The grid centerline elevations for the VANTAGE 5H are 0.270 inches lower than those of the STD assembly, except for the top and bottom grids. The VANTAGE 5H top and bottom grids, respectively, are 0.360 and 0.355 inches lower than the STD design. However, any integral contact between the two assemblies will be grid-to-grid. By matching grid elevation, any crossflow maldistribution between the STD and the VANTAGE 5H fuel assembly is minimized.

Each fuel assembly is installed vertically in the reactor vessel and stands upright on the lower core plate, which is fitted with alignment pins to locate and orient the assembly. After all fuel assemblies are set in place, the upper support structure is installed. Alignment pins, built into the upper core plate, engage and locate the upper ends of the fuel assemblies. The upper core plate then bears downward against the fuel assembly top nozzle via the holddown springs to hold the fuel assemblies in place.

4.2.1.2.1 Fuel Rods

The STD and Vantage 5H fuel rods consist of uranium dioxide ceramic pellets contained in slightly cold worked Zircaloy-4 tubing which is plugged and seal welded at the ends to

encapsulate the fuel. Schematics of the fuel rod are shown in Figure 4.2.1-3 and 4.2.1-3a. The fuel pellets are right circular cylinders consisting of uranium-dioxide powder which has been compacted by cold pressing and then sintered to the required density. The ends of each pellet are dished slightly to allow greater axial expansion at the center of the pellets and are chamfered to minimize pellet cracking during handling.

An older design of the STD fuel rod is also in use at SQN. A typical schematic of the fuel rod is shown in Figure 4.2.1-10 (labeled GROUP - 2). The older design of fuel pellets are dished, but may or may not be chamfered depending on the date that they were made. The older STD fuel rod has an external grip for rod loading. STD fuel rods are used in both STD skeletons (grids, guide and instrument tubes, and top and bottom nozzles) and in VANTAGE 5H skeletons.

The VANTAGE 5H and the STD fuel rods have the same clad wall thickness and outer diameters. Also, the bottom end plug has an internal grip feature to facilitate rod loading on both designs. The VANTAGE 5H fuel rod length is larger by 0.640 inches to provide a longer plenum and bottom end plug. The bottom end plug is longer to provide a longer lead-in for the removable top nozzle reconstitution feature. The VANTAGE 5H rods may have axial blankets and Integral Fuel Burnable Absorbers (IFBA) features.

The VANTAGE 5H rods contain standardized pellets which are a refinement of the pellets in the standard assembly design. The ends of each fuel pellet have a small chamfer at the cylindrical surface and a reduction in the dish diameter and depth compared to previous Westinghouse unchamfered pellets. Additionally, the pellet length is reduced (L/D = 1.2). The chamfer improves pellet chip resistance during manufacturing and handling. Also, compared to previous Westinghouse fuel designs, the VANTAGE 5H rods use a smaller fuel rod plenum spring which satisfies the 4g axial and 6g lateral load design bases. The lower spring force reduces the already low potential for chamfered pellet chipping in the fuel rod. The smaller fuel rod plenum spring also provides additional plenum volume for fission gas release.

The axial blankets, if present, are a nominal six inches of unenriched fuel pellets at each end of the fuel rod pellet stack. Axial blankets reduce neutron leakage and improve fuel utilization. The axial blankets utilize chamfered pellets which are physically different (length) than the enriched pellets to help prevent accidental mixing during manufacturing.

The IFBA coated fuel pellets are identical to the enriched uranium dioxide pellets except for the addition of a thin zirconium diboride (ZrB_2) coating less than 0.001 inch in thickness on the pellet cylindrical surface. Coated pellets occupy the central portion of the fuel column (up to 134 inches). The number and pattern of IFBA rods within an assembly may vary depending on specific application. The ends of the IFBA enriched coated pellets, like the enriched uncoated pellets, are also dished to allow for greater axial expansion at the pellet centerline and void volume for fission gas release. An evaluation and test program for the IFBA design features are given in Section 2.5 in Reference 20.

To avoid overstressing of the cladding or seal welds, void volume and clearances are provided within the rods to accommodate fission gases released from the fuel, differential thermal expansion between the cladding and the fuel, and fuel density changes during burnup. Shifting of the fuel within the cladding during handling or shipping prior to core loading is prevented by a stainless steel helical spring which bears on top of the fuel. During assembly the pellets are stacked in the cladding to the required fuel height, the spring is then inserted into the top end of

the fuel tube and the end plugs pressed into the ends of the tube and welded. All fuel rods are internally pressurized with helium during the welding process in order to minimize compressive clad stresses and creep due to coolant operating pressures. The helium pre-pressurization may be different for each fuel region. Fuel rod pressurization is dependent on the planned fuel burnup as well as other fuel design parameters and fuel characteristics (particularly densification potential). The fuel rods are designed such that (1) the internal gas pressure of the lead rod will not exceed the value which causes the fuel-clad diametral gap to increase due to outward cladding creep during steady state operation, (2) extensive DNB propagation will not occur, (3) the cladding stress-strain limits (Section 4.2.1.1.1) are not exceeded for condition I and II events, and (4) clad flattening will not occur during the fuel core life.

4.2.1.2.2 Fuel Assembly Structure

The fuel assembly structure consists of a bottom nozzle, top nozzle, guide thimbles and grids, as shown in Figures 4.2.1-2 and 4.2.1-2a.

Bottom Nozzle

The bottom nozzle is a box-like structure which serves as a bottom structural element of the fuel assembly and directs the coolant flow distribution to the assembly. The square nozzle is fabricated from type 304 stainless steel and consists of a perforated plate and four angle legs with bearing plates as shown in Figure 4.2.1-2 and 4.2.1-2a. The legs form a plenum for the inlet coolant flow to the fuel assembly. The plate itself acts to prevent a downward ejection of the fuel rods from their fuel assembly. The bottom nozzle is fastened to the fuel assembly guide tubes by weld-locked screws or integral deformable locking cap screws which penetrate through the nozzle and mate with an inside fitting in each guide tube, as shown in Figure 4.2.1-4.

The VANTAGE 5H design will include use of the DFBN to reduce the possibility of fuel rod damage due to debris-induced fretting. The relatively large flow holes in a conventional bottom nozzle are replaced with a new pattern of smaller holes. The holes are sized to minimize passage of debris particles large enough to cause damage while providing sufficient flow area, comparable pressure drop, and continued structural integrity of the nozzle. Tests to measure pressure drop and demonstrate structural integrity verified that the 304 stainless steel DFBN is totally compatible with the current design.

Changes in design compared to the 17x17 STD bottom nozzle design include: 1) a modified flow hole size and pattern as described above; 2) a decreased nozzle height and thinner top plate to accommodate the extended burnup fuel rod; and, 3) increased lead-in chamfers for the core pin interface to improve handling. The DFBN will be fabricated from 304 stainless steel as is the 17x17 STD design.

Coolant flow through the fuel assembly is directed from the plenum in the bottom nozzle upward through the penetrations in the plate to the channels between the fuel rods. The penetrations in the plate are positioned between the rows of the fuel rods.

Axial loads (holddown) imposed on the fuel assembly and the weight of the fuel assembly are transmitted through the bottom nozzle to the lower core plate. Indexing and positioning of the

fuel assembly is controlled by alignment holes in two diagonally opposite bearing plates which mate with locating pins in the lower core plate. Any lateral loads on the fuel assembly are transmitted to the lower core plate through the locating pins.

Top Nozzle

The top nozzle assembly functions as the upper structural element of the fuel assembly in addition to providing a partial protective housing for the rod cluster control assembly or other components. It consists of an adapter plate, enclosure, top plate, hold down springs, clamps, and pads as shown in Figure 4.2.1-2 and 4.2.1-2a. The springs and bolts are made of Inconel 718 and Inconel 600 respectively, whereas other components are made of type 304 stainless steel.

The square adapter plate is provided with round and obround penetrations to permit the flow of coolant upward through the top nozzle. For STD fuel other round holes are provided to accept sleeves which are welded to the adapter plate and mechanically attached to the thimble tubes. The ligaments in the plate cover the tops of the fuel rods and prevent their upward ejection from the fuel assembly. The enclosure is a sheet metal shroud which sets the distance between the adapter plate and the top plate. The top plate has a large square hole in the center to permit access for the control rods and the control rod spiders. Holddown springs are mounted on the top plate and are fastened in place by bolts and clamps located at two diagonally opposite corners. On the other two corners integral pads are positioned which contain alignment holes for locating the upper end of the fuel assembly.

The reconstitutable top nozzle (RTN) for the VANTAGE 5H fuel assembly differs from the conventional design in two ways: a groove is provided in each thimble thru-hole in the nozzle plate to facilitate attachment and removal, and the nozzle plate thickness is reduced to provide additional axial space for fuel rod growth.

In the VANTAGE 5H reconstitutable top nozzle design, a stainless steel nozzle insert is mechanically connected to the top nozzle adapter plate by means of a pre-formed circumferential bulge near the top of the insert. The insert engages a mating groove in the wall of the adapter plate thimble tube thru-hole. The insert has four (4) equally spaced axial slots which allow the insert to deflect inwardly at the elevation of the bulge, thus permitting the installation or removal of the nozzle. The insert bulge is positively held in the adapter plate mating groove by placing a lock tube with a uniform ID identical to that of the thimble tube into the insert.

To remove the top nozzle, a tool is first inserted through a lock tube and expanded radially to engage the bottom edge of the tube. An axial force is then exerted on the tool which overrides the local lock tube deformations and withdraws the lock tube from the insert. After the lock tubes have been withdrawn, the nozzle is removed by raising it off the upper slotted ends of the nozzle inserts which deflect inwardly under the axial lift load. With the top nozzle removed, direct access is provided for fuel rod examinations or replacement. Reconstitution is completed by the remounting of the nozzle and the insertion of lock tubes. The design bases and evaluation of the reconstitutable top nozzle are given in Section 2.3.2 in Reference 20.

Guide and Instrument Thimbles

The guide thimbles are structural members which also provide channels for the neutron absorber rods, burnable absorber rods or neutron source assemblies. Each one is fabricated from Zircaloy-4 tubing having two different diameters. The larger diameter at the top provides a relatively large annular area to permit rapid insertion of the control rods during a reactor trip as well as to accommodate the flow of coolant during normal operation. The lower portion of the guide thimbles has a reduced diameter to produce a dashpot action near the end of the control rod travel during a reactor trip. Four holes are provided on the thimble tube above the dashpot to reduce the rod drop time. The dashpot is closed at the bottom by means of an end plug which is provided with a small flow port to avoid fluid stagnation in the dashpot volume during normal operation and to accommodate the outflow of water from the dashpot during a reactor trip. The lower end of the guide thimble is fitted with an end plug which is then fastened into the bottom nozzle by a weld locked screw or integral locking cap screw. In the VANTAGE 5H design, the top end of the guide thimbles are fastened to a tubular nozzle insert sleeve by three expansion swages. The inserts engage into mating grooves in the top nozzle adapter plate as shown in Figure 4.2.1-6b. In the STD assembly design, the guide thimbles are similarly fastened to the top grid sleeves which are then welded to the top nozzle adapter plate as shown in Figure 4.2.1-6a.

Guide thimbles of the VANTAGE 5H design are identical to those of the STD design with the exception of a reduction in diameter and length above the dashpot. The diametral reduction is required to allow for the thicker straps of the mid Zircaloy grids; the length reduction is required by the RTN design. The VANTAGE 5H thimble tube ID provides an adequate nominal diametral clearance of 0.061 inches for the control rods. The VANTAGE 5H thimble tube ID also provides sufficient diametral clearance for burnable absorber rods, source rods, and thimble plugs. The thimble plugs used in the Sequoyah Units are the dually compatible type and can be inserted into the STD and VANTAGE 5H assembly guide thimbles.

For both the VANTAGE 5H and STD designs, each grid is fastened to the guide thimble assemblies to create an integrated structure. The fastening method depicted in Figures 4.2.1-7a and 4.2.1-7b is used for all but the top and bottom grids in the VANTAGE 5H assembly. Shown in Figure 4.2.1-5 and 4.2.1-7c is the fastening method for the mid grids of the STD assembly.

An expanding tool is inserted into the inner diameter of the Zircaloy thimble tube at the elevation of stainless steel sleeves that have been brazed into the Inconel grid assembly. In the VANTAGE 5H design, these mid grid sleeves are made of Zircaloy and are laser welded to the Zircaloy grid assemblies. The four-lobed tool forces the thimble and sleeve outward to a predetermined diameter, thus joining the two components.

The bottom grid assembly is joined to the assembly as shown in Figure 4.2.1-8. The stainless steel insert is spotwelded to the bottom grid and later captured between the guide thimble end plug and the bottom nozzle by means of a stainless steel thimble screw.

The described methods of grid fastening are standard and have been used successfully since the introduction of Zircaloy guide thimbles in 1969.

The central instrumentation tube of each fuel assembly is constrained by seating in counterbores in each nozzle. This tube is a constant diameter and guides the incore neutron detectors. The instrumentation tube of the VANTAGE 5H design has a reduced diameter as compared to that of the STD design. Sufficient diametral clearance exists for the flux thimble to traverse the tube without binding. Instrumentation tubes are expanded at the top and mid grids in the same manner for both assembly designs as the previously discussed expansion of the guide thimbles to the grids.

Grid Assemblies

The fuel rods, as shown in Figures 4.2.1-2 and 4.2.1-2a, are supported at intervals along their length by structural grid assemblies which maintain the lateral spacing between the rods. Each fuel rod is supported laterally within each grid cell by a combination of support dimples and springs (six support locations per cell: four dimples and two springs). The magnitude of grid spacing spring force on the fuel rods is set high enough to minimize possible fretting, without overstressing the cladding at the contact points. All grid assemblies allow axial thermal expansion of the fuel rods without imposing restraint sufficient to develop buckling or distortion.

The top and bottom grids are made of Inconel 718 strap materials, chosen for its strength and high corrosion resistance. These non-mixing vane grids are nearly identical in the STD and VANTAGE 5H designs. VANTAGE 5H differences are: 1) a snag resistant design minimizes assembly interactions during core loading/core unloading; 2) dimples are rotated 90 degrees to minimize fuel rod fretting and dimple cocking; 3) grid heights are increased to 1.522 inches to accommodate rotated dimples; 4) the top grid spring force has been reduced to minimize rod bow; and, 5) top grid sleeves are made of 304L stainless steel instead of 304 S/S as in the STD design.

The six intermediate (mixing vane) grids of the VANTAGE 5H design are made of Zircaloy straps (chosen for its low neutron absorption properties), whereas Inconel is used for the mid grids of the STD design. Inner straps of both designs include mixing vanes which project into the coolant stream and promote mixing of the coolant in the high heat flux region of the assemblies. Relative to STD Inconel mid grids, the VANTAGE 5H grid includes: 1) increased strap thickness and strap height for structural performance; 2) the anti-snag feature as noted above; 3) chamfered upstream strap edges; and 4) grid springs positioned diagonally to further improve pressure drop. The VANTAGE 5H Zircaloy mid grid is designed for approximately the same pressure drop as the STD Inconel mid grid and has superior structural performance relative to it as discussed in Reference 19.

All grid assemblies consist of individual slotted straps assembled in an interlocking "egg-crate" arrangement. Zircaloy grid strap joints and grid/sleeve joints are fabricated by laser welding, whereas all Inconel grid joints are brazed. The outside straps on all grids contain mixing vanes which, in addition to their mixing function, aid in guiding the grids and fuel assemblies past projecting surfaces during handling or during loading and unloading of the core.

4.2.1.3 Design Evaluation

4.2.1.3.1 Fuel Rods

The fuel rods are designed to assure the design bases are satisfied for Condition I and II events. This assures that the fuel performance and safety criteria (Section 4.2) are satisfied.

Materials - Fuel Cladding

The desired fuel rod cladding is a material which has a superior combination of neutron economy (low absorption cross section), high strength (to resist deformation due to differential pressures and mechanical interaction between fuel and clad), high corrosion resistance (to coolant, fuel and fission products), and high reliability. Zircaloy-4 has this desired combination of cladding properties. As shown in Reference 2, there is considerable PWR operating experience on the capability of Zircaloy as a cladding material. Clad hydriding has not been a significant cause of clad perforation since current controls on fuel contained moisture levels were instituted (Reference 2).

Metallographic examination of irradiated commercial fuel rods have shown occurrences of fuel/clad chemical interaction. Reaction layers of <1 mil in thickness have been observed between fuel and clad at limited points around the circumference. Westinghouse metallographic data indicates that this interface layer remains very thin even at high burnup. Thus, there is no indication of propagation of the layer and eventual clad penetration.

Stress corrosion cracking is another postulated phenomenon related to fuel/clad chemical interaction. Out-of-reactor tests have shown that in the presence of high clad tensile stress, relatively large concentrations of iodine, or cadmium in solution in liquid cesium can stress corrode zircaloy tubing and lead to eventual clad cracking. Extensive post irradiation examination has produced no conclusive evidence that this mechanism is operative in commercial fuel.

Materials - Fuel Pellets

Sintered, high density uranium dioxide fuel is chemically inert, with respect to the cladding, at core operating temperatures and pressures. In the event of cladding defects, the high resistance of uranium dioxide to attack by water protects against fuel deterioration although limited fuel erosion can occur. As has been shown by operating experience and extensive experimental work, the thermal design parameters conservatively account for changes in the thermal performance of the fuel elements due to pellet fracture which may occur during power operation. The consequences of defects in the cladding are greatly reduced by the ability of uranium dioxide to retain fission products including those which are gaseous or highly volatile.

Observations from several operating Westinghouse PWR's (Reference 4) have shown that fuel pellets can densify under irradiation to a density higher than the manufactured values. Fuel densification and subsequent incomplete settling of the fuel pellets results in local and distributed gaps in the fuel rods. Fuel densification has been minimized by improvements in the fuel manufacturing process and by specifying a nominal 95 percent initial fuel density.

The effects of fuel densification have been taken into account in the nuclear and thermal-hydraulic design of the reactor described herein in Section 4.3 and 4.4, respectively.

Materials - Strength Considerations

One of the most important limiting factors in fuel element duty is the mechanical interaction of fuel and cladding. This fuel cladding interaction produces cyclic stresses and strains in the cladding, and these in turn consume cladding fatigue life. The reduction of fuel cladding interaction is therefore a principal goal of design. In order to achieve this goal and to enhance the cyclic operational capability of the fuel rod, the technology for using pre-pressurized fuel rods in Westinghouse PWR's has been developed.

Steady State Performance Evaluation

In the calculation of the steady-state performance of a nuclear fuel rod, the following interacting factors must be considered:

1. Clad creep and elastic deflection,

2. Pellet density changes, thermal expansion, gas release, release of helium from IFBA, if present, and thermal properties as a function of temperature and fuel burnup,

3. Internal pressure as a function of fission gas release, rod geometry, and temperature distribution.

These effects are evaluated using overall fuel rod design models (References 5 and 6), which include appropriate models for time dependent fuel densification. With these interacting factors considered, the model determines the fuel rod performance characteristics for a given rod geometry, power history, and axial power shape. In particular, internal gas pressure, fuel and cladding temperatures, and cladding deflections are calculated. The fuel rod is divided lengthwise into several sections and radially into a number of annular zones. Fuel density changes, cladding stresses, strains and deformations, and fission gas releases are calculated separately for each segment. The effects are integrated to obtain the internal rod pressure.

The initial rod internal pressure is selected to delay fuel/clad mechanical interaction and to avoid the potential for flattened rod formation. It is limited, however, by the design criteria for the rod internal pressure. The plenum height of the fuel rod has been designed to ensure that the maximum internal pressure of the fuel rod will not exceed the value which would cause the fuel clad diametral gap to increase during steady state operation.

The gap conductance between the pellet surface and the cladding inner diameter is calculated as a function of the composition, temperature, and pressure of the gas mixture, and the gap size or contact pressure between clad and pellet. After computing the fuel temperature for each pellet annular zone, the fractional fission gas release is calculated based on local fuel temperature and burnup. The total amount of gas released is based on the average fractional release within each axial and radial zone and the gas generation rate which in turn is a function of burnup. Finally, the gas released is summed over all zones and the pressure is calculated.

The model shows good agreement in fit for a variety of published and proprietary data on fission gas release, release of helium from IFBA, if present, fuel temperatures and clad deflection

(References 5 and 6). Included in this spectrum are variations in power, time, fuel density, and geometry. The in-pile fuel temperature measurement comparisons used are referenced in Paragraph 4.4.2.2.

Initially, the gap between the fuel and cladding is sufficient to prevent hard contact between the two. However, during power operation a gradual compressive creep of the cladding onto the fuel pellet occurs due to the external pressure exerted on the rod by the coolant. Cladding compressive creep eventually results in fuel/clad contact. During this period of fuel/clad contact, changes in power level could result in changes in cladding stresses and strains. By using prepressurized fuel rods to partially offset the effect of the coolant external pressure, the rate of cladding creep toward the surface of the fuel is reduced. Fuel rod prepressurization delays the time at which fuel/clad contact occurs and hence, significantly reduces the number and extent of cyclic stresses and strains experienced by the cladding both before and after fuel/clad contact. These factors result in an increase in the fatigue life margin of the cladding and lead to greater cladding reliability. If gaps should form in the fuel stacks, cladding flattening will be prevented by the rod prepressurization so that the flattening time will be greater than the fuel core life.

The clad stresses at a constant local fuel rod power are low. Compressive stresses are created by the pressure differential between the coolant pressure and the rod internal gas pressure. Because of the pre-pressurization with helium the volume average effective stresses are always less than ~11,000 psi at the pressurization level used in this fuel rod design. Stresses due to the temperature gradient are not included in this average effective stress because thermal stresses are, in general, negative at the clad ID and positive at the clad OD and their contribution to the clad volume average stress is small. Furthermore, the thermal stress decreases with time during steady-state operation due to stress relaxation. The stress due to pressure differential is highest in the minimum power rod at the beginning of life (due to low internal gas pressure) and the thermal stress is highest in the maximum power rod (due to steep temperature gradient).

For rods designed for increased discharge burnup, the internal gas pressure at BOL ranges from ~650 psi to ~1050 psi. The total tangential stress at the clad ID at BOL is ~15,800 psi compressive (~14,600 psi due to -P and ~1,200 psi due to-T) for a low power rod, operating at 5 kw/ft and ~15,100 psi compressive (~11,900 psi due to-P and ~3200 psi due to-T) for a high power rod operating at 15 kw/ft. However, the volume average effective stress at BOL is between ~8,000 psi (high power rod) and ~11,000 psi (low power rod). These stresses are substantially below even the unirradiated clad strength ~55,500 psi) at a typical clad mean operating temperature of 700°F.

Tensile stresses could be created once the clad has come in contact with the pellet. These stresses would be induced by the fuel pellet swelling during irradiation. There is very limited clad pushout after pellet-clad contact. Fuel swelling can result in small clad strains (< 1%) for expected discharge burnups but the associated clad stresses are very low because of clad creep (thermal and irradiation-induced creep). Furthermore, the 1% strain criterion is extremely conservative for fuel-swelling driven clad strain because the strain rate associated with solid fission products swelling is very slow ($.5 \times 10^{-7}$ hr^{-1}). In-pile experiments (Reference 7) have shown that Zircaloy tubing exhibits "super-plasticity" at slow strain rates during neutron irradiation. Uniform clad strains of >10% have been achieved under these conditions with no sign of plastic instability.

Pellet thermal expansion due to power increases is considered the only mechanism by which significant stresses and strains can be imposed on the clad. Power increases in commercial reactors can result from fuel shuffling (e.g., Region 3 positioned near the center of the core for Cycle 2 operation after operating near the periphery during Cycle 1), reactor power escalation following extended reduced power operation, and control rod movement. In the mechanical design model, lead rods are depleted using best estimate power histories as determined by core physics calculations. During the depletion, the amount of diametral gap closure is evaluated based upon the pellet expansion-cracking model, clad creep model, and fuel swelling model. At various times during the depletion the power is increased locally on the rod to the burnup dependent attainable power density as determined by core physics calculations. The radial, tangential, and axial clad stresses resulting from the power increase are combined into a volume average effective clad stress.

The von Mises criterion is used to evaluate if the clad yield stress has been exceeded. This criterion states that an isotropic material in multiaxial stress will begin to yield plastically when the effective stress exceeds the yield stress as determined by a uniaxial tensile test. The yield stress correlation is that for irradiated cladding since fuel/clad interaction occurs at high burnup. Furthermore, the effective stress is increased by an allowance, which accounts for stress concentrations in the clad adjacent to radial cracks in the pellet, prior to the comparison with the yield stress. This allowance was evaluated using a two-dimensional $(\gamma,\theta)1$ finite element model.

Slow transient power increases can result in large clad strains without exceeding the clad yield stress because of clad creep and stress relaxation. Therefore, in addition to the yield stress criterion, a criterion on allowable clad positive strain is necessary. Based upon high strain rate burst and tensile test data on irradiated tubing, 1% strain was determined to be the lower limit on irradiated clad ductility and thus adopted as a design criterion.

In addition to the mechanical design models and design criteria, Westinghouse relies on performance data accumulated through transient power test programs in experimental and commercial reactors, and through normal operation in commercial reactors.

It is recognized that a possible limitation to the satisfactory behavior of the fuel rods in a reactor which is subjected to daily load follow is the failure of the cladding by low cycle strain fatigue. During their normal residence time in reactor, the fuel rods may be subjected to ~1000 cycles with typical changes in power level from 50 to 100% of their steady-state values.

The assessment of the fatigue life of the fuel rod cladding is subjected to a considerable uncertainty due to the difficulty of evaluating the strain range which results from the cyclic interaction of the fuel pellets and claddings. This difficulty arises for example from such highly unpredictable phenomena as pellet cracking, fragmentation, and relocation. Nevertheless, since early 1968, Westinghouse has been investigating this particular phenomenon both analytically and experimentally. Strain fatigue tests on irradiated and nonirradiated hydrided Zr-4 claddings were performed which permitted a definition of a conservative fatigue life limit and recommendation of a methodology to treat the strain fatigue evaluation of the Westinghouse reference fuel rod designs.

However, Westinghouse is convinced that the final proof of the adequacy of a given fuel rod design to meet the load follow requirements can only come from in-pile experiments performed on actual reactors. The Westinghouse experience in load follow operation dates back to early

1970 with the load follow operation of the Saxton reactor. More recently, successful load follow operation has been performed on Point Beach unit 1 (300 load follow cycles) and Point Beach unit 2 (150 load follow cycles). In both cases, there was no significant coolant activity increase that could be associated with the load follow mode of operation.

The following paragraphs present briefly the Westinghouse analytical approach to strain fatigue.

A comprehensive review of the available strain-fatigue models was conducted by Westinghouse as early as 1968.

This included the Langer-O'Donnel model, (Reference 8), the Yao-Munse model, and the Manson-Halford model. Upon completion of this review and using the results of the Westinghouse experimental programs discussed below, it was concluded that the approach defined by Langer-O'Donnel would be retained and the empirical factors of their correlation modified in order to conservatively bound the results of the Westinghouse testing program.

The Langer-O'Donnel empirical correlation has the following form:

$$S_a = \frac{E\ ln}{4\sqrt{N_f}} \left(\frac{100}{100 - RA}\right) + S_e$$

Where: S_a = 1/2 E $-\varepsilon_t$ = pseudo - stress amplitude which causes failure in N_f cycles (lb/in^2)

$-\varepsilon_t$ = total strain range (in/in)

E = Young's Modulus (lb/in^2)

N_f = number of cycles to failure

RA = reduction in area at fracture in a uniaxial tensile test (%)

S_e = endurance limit (lb/in^2)

Both RA and Se are empirical constants which depend on the type of material, the temperature and the irradiation. The Westinghouse testing program was subdivided in the following sub-programs:

1. A rotating bend fatigue experiment on unirradiated Zr-4 specimens at room temperature and at 725°F. Both hydrided and non-hydrided Zr-4 cladding were tested.

2. A biaxial fatigue experiment in gas autoclave on unirradiated Zr-4 cladding both hydrided and non-hydrided.

3. A fatigue test program on irradiated cladding from the CVTR and Yankee Core V conducted at Battelle Memorial Institute.

The results of these test programs provided information on different cladding conditions including the effect of irradiation, of hydrogen level, and of temperature.

The Westinghouse design equations followed the concept for the fatigue design criterion according to Section 3 of the ASME Boiler and Pressure Vessel Code. Namely:

1. The calculated pseudo-stress amplitude (S_a) has to be multiplied by a factor of 2 in order to obtain the allowable number of cycles (N_f).

2. The allowable cycles for a given S_a is 5% of N_f, or a safety factor of 20 on cycles.

The lesser of the two allowable number of cycles is selected. The cumulative fatigue life fraction is then computed as:

$$\sum_{1}^{k} n_k / N_{fk} \leq 1$$

where: n_k = number of diurnal cycles of mode k.

The potential effects of operation with waterlogged fuel are discussed in Paragraph 4.4.3.6. Waterlogging is not considered to be a concern during operational transients.

4.2.1.3.2 <u>Fuel Assembly Structure Stresses and Deflections</u>

The potential sources of high stresses in the assembly are avoided by the design. For example, stresses in the fuel rod due to thermal expansion and Zircaloy irradiation growth are limited by the relative motion of the rod as it slips over the grid spring and dimple surfaces. Clearances between the fuel rod ends and nozzles are provided so that Zircaloy irradiation growth will not result in end interferences. As another example, stresses due to holddown springs in opposition to the hydraulic lift force are limited by the deflection characteristic of the springs. Stresses in the fuel assembly caused by tripping of the rod cluster control assembly have little influence on fatigue because of the small number of events during the life of an assembly. Welded joints in the fuel assembly structure are considered in the structural analysis of the assembly. Appropriate material properties of welds are used to insure the design bases are met. Assembly components and prototype fuel assemblies made from production parts have been subjected to structural tests to verify that the design bases requirements are met.

The fuel assembly design loads for shipping have been established. Probes are permanently placed into the shipping cask to monitor and detect fuel assembly displacements that would result from loads in excess of the criteria. Past history and experience has indicated that loads which exceeded the allowable limits rarely occur. Exceeding the limits requires reinspection of the fuel assembly for damage. Tests on various fuel assembly components such as the grid assembly, sleeves, inserts and structure joints have been performed to assure that the shipping design limits do not result in impairment of fuel assembly function.

The methodology for the seismic analysis of the fuel assemblies are presented in References 9, 13, and 19.

Dimensional Stability

A prototype fuel assembly has been subjected to column loads in excess of those expected in normal service and faulted conditions (see References 9 and 19).

The coolant flow channels are established and maintained by the structure composed of grids and guide thimbles. The lateral spacing between fuel rods is provided and controlled by the support dimples of adjacent grid cells. Contact of the fuel rods on the dimples is assured by the clamping force provided by the grid springs. Lateral motion of the fuel rods is opposed by the spring force and the internal moments generated between the spring and the support dimples. Grid testing is discussed in References 9 and 19.

No interference with control rod insertion into thimble tubes will occur during a postulated LOCA transient due to fuel rod swelling, thermal expansion, or bowing. In the early phase of the transient following the coolant break the high axial loads which potentially could be generated by the difference in thermal expansion between fuel clad and thimbles are relieved by slippage of the fuel rods through the grids. The relatively low drag force restraint on the fuel rods will only induce minor thermal bowing not sufficient to close the fuel rod-to-thimble tube gap. This rod-to-grid slip mechanism occurs simultaneously with control rod drop.

Vibration and Wear

The effect of a flow induced vibration on the fuel assembly and individual fuel rods is minimal. The cyclic stress range associated with deflections of such small magnitude is insignificant and has no effect on the structural integrity of the fuel rod.

The conclusion that the effect of flow induced vibrations on the fuel assembly and fuel rod is minimal is based on test results and analysis documented in the Hydraulic Flow Test of the 17 x 17 Fuel Assembly report (Reference 10) which takes into consideration the condition normally encountered in reactor operation. Hydraulic flow test results of the VANTAGE 5H assembly are discussed in Reference 19.

The reaction on the grid support due to vibration motions is also correspondingly small and definitely much less than the spring preload.

Firm contact is therefore maintained. No significant wear of the cladding or grid supports is expected during the life of the fuel assembly, based on out-of-pile flow tests, performance of similarly designed fuel in operating reactors, and design analyses. Clad fretting and fuel rod vibration has been experimentally investigated, as shown in Reference 10.

Evaluation of the Reactor Core for a Limited Displacement RPV Inlet Nozzle Break and a Double-Ended RCP Outlet Nozzle Break

The fuel assembly responses resulting from a limited displacement RPV inlet nozzle break and a double-ended Reactor Coolant Pump outlet nozzle break were analyzed using time history

techniques. The limited displacement RPV outlet nozzle break was not analyzed since previous analyses have indicated that the fuel assembly impact forces and deflections for this break size and location were substantially less than those obtained for the RPV inlet nozzle break. The vessel motion resulting from the various pipe breaks induce lateral loads on the reactor core which are analyzed using the seismic model described in Reference 9. The model which is used to assess fuel assembly interaction, specifically the displacements and impact forces, consists of a finite element representation of the fuel assemblies arranged in a planar array with inter assembly gaps. For the Sequoyah plant, fifteen fuel assemblies which corresponds to the maximum number of assemblies across the core diameter were used in the model.

Examination of the upper and lower horizontal core plate motions resulting from the reactor vessel translation and internal forces indicated significant differences. As a result, the symmetric assumption used in the seismic analysis was no longer valid and necessitated the use of the complete fuel assembly beam type finite element model with six nodal positions representing each active grid location (see Reference 13).

A series of fifteen fuel assembly elements as shown in Figure 4.2.1-9 was used to represent the core with the core baffle and support represented by a single beam element as indicated. The upper and lower core plate time history motions designated as $F^1(t)$ and $F^2(t)$ in Figure 4.2.1-9 were obtained from the analysis of the reactor vessel and piping. (See Section 5.2.1.7). The core plate motions were then simultaneously applied to the simulated core baffle and fuel assemblies.

The fuel assembly response, namely, displacements and grid impact forces, was obtained from the reactor core model using the core plate motions. Examination of the fuel assembly response curves for the inlet nozzle break indicate that the initial relative motion is in the opposite direction with respect to the excitation motion. The fuel assembly motion then reverses resulting in impacting at the baffle wall opposite the pipe break. The maximum fuel assembly deflection occurred in the peripheral fuel assembly. The fuel assembly stresses resulting from this deflection were evaluated and showed substantial margins compared to the allowable values.

The reactor core response resulting from the double ended break at the reactor coolant pump was similar to that obtained for the RPV inlet nozzle break. However, the fuel assembly maximum displacement was significantly lower.

The fuel assembly grid impact forces were also obtained from the reactor core time history response. A comparison of the grid impact forces for the two break locations indicated that the RPV inlet nozzle break produces slightly higher forces. The maximum impact forces occurred at the peripheral fuel assembly locations adjacent to the baffle wall. The grid impact forces were rapidly attenuated for fuel assembly positions away from the periphery. Consequently only a small portion of the core experiences substantial grid impact forces. The maximum grid impact forces are required to be less than the allowable grid crush strength. A calculation of the maximum LOCA and seismic grid impact forces, combined the square root sum of the squares method (in accordance with SRP 4.2, Appendix A), demonstrate that the maximum value is less than the allowable grid strength.

4.2.1.3.3 Operational Experience

Westinghouse has had considerable experience with Zircaloy-clad fuel since its introduction in the Jose Cabrera plant in June 1968. This experience is extensively described in Reference 2.

4.2.1.3.4 Test Rod and Test Assembly Experience

This experience is presented in Sections 8 and 23 of Reference 3, and in Reference 20, Addendum 1-A, Section D.

4.2.1.4 Testing and Inspection Plan

4.2.1.4.1 Quality Assurance Program

The quality assurance program plan of the Westinghouse Nuclear Fuel Division for the Nuclear Plant (SQN) Sequoyah is summarized in Reference 11.

The program provides for control over all activities affecting product quality, commencing with design and development and continuing through procurement, materials handling, fabrication, testing and inspection, storage, and transportation. The program also provides for the indoctrination and training of personnel and for the auditing of activities affecting product quality through a formal auditing program.

Westinghouse drawings and product, process, and material specifications identify the inspections to be performed.

4.2.1.4.2 Quality Control

Quality control (QC) philosophy is generally based on the following inspections being performed to a 95 percent confidence that at least 95 percent of the product meets specification, unless otherwise noted.

A. Fuel system components and parts.

The characteristics inspected depend upon the component parts; the QC program includes dimensional and visual examinations, check audits of test reports, material certification, and nondestructive examination, such as X-ray and ultrasonic.

All material used in this core is accepted and released by QC.

B. Pellets

Inspection is performed for dimensional characteristics such as diameter, density, length, and squareness of ends. Additional visual inspections are performed for cracks, chips, and surface conditions according to approved standards.

Density is determined in terms of weight per unit length and is plotted on zone charts used in controlling the process. Chemical analyses are taken on a specified sample basis throughout pellet production.

C. Rod inspection

The fuel rod inspection consists of the following nondestructive examination techniques and methods, as applicable:

1. Each rod is leak tested using a calibrated mass spectrometer, with helium being the detectable gas.

2. All weld enclosures are ultrasonic tested or X-rayed. X-rays are taken in accordance with Westinghouse specifications meeting the requirements of ASTM-E-142.

3. All rods are dimensionally inspected prior to final release. The requirements include such items as length, camber, and visual appearance.

4. All of the fuel rods are inspected by gamma scanning or other approved methods to ensure proper plenum dimensions.

5. All of the fuel rods are inspected by gamma scanning or other methods to ensure that no significant gaps exist between pellets.

6. All of the fuel rods are active gamma scanned to verify enrichment control prior to acceptance for assembly loading.

7. Traceability of rods and associated rod components is established by QC.

D. Assemblies

Each fuel assembly is inspected for compliance with drawing and/or specification requirements. Other incore control component inspection and specification requirements are given in Paragraph 4.2.3.4.

E. Other inspections

The following inspections are performed as part of the routine inspection operation:

1. Tool and gage inspection and control, including standardization to primary and/or secondary working standards. Tool inspection is performed at prescribed intervals on all serialized tools. Complete records are kept of calibration and condition of tools.

2. Audits are performed of inspection activities and records to ensure that prescribed methods are followed and that records are correct and properly maintained.

3. Surveillance inspection, where appropriate, and audits of outside contractors are performed to ensure conformance with specified requirements.

F. Process control

To prevent the possibility of mixing enrichments during fuel manufacture and assembly, strict enrichment segregation and other process controls are exercised.

The UO_2 powder is kept in sealed containers. The contents are fully identified both by descriptive tagging and preselected color coding. A Westinghouse identification tag completely describing the contents is affixed to the containers before transfer to powder storage. Isotopic content is confirmed by analysis.

Powder withdrawal from storage can be made by only one authorized group, which directs the powder to the correct pellet production line. All pellet production lines are physically separated from each other and pellets of only a single nominal enrichment are produced in a given production line at any given time.

Finished pellets are placed on trays identified with the same color code as the powder containers and transferred to segregated storage racks within the confines of the pelleting area. Samples from each pellet lot are tested for isotopic content and impurity levels prior to acceptance by QC. Physical barriers prevent mixing of pellets of different nominal densities and enrichments in this storage area. Unused powder and substandard pellets are returned to storage in the original color-coded containers.

Loading of pellets into the clad is performed in isolated production lines, and again only one enrichment is loaded on a line at a time.

A serialized traceability code is placed on each fuel tube to provide unique identification. The end plugs are inserted and then inert-welded to seal the tube.

At the time of installation into an assembly a matrix is generated to identify each rod in its position within a given assembly. The top nozzle is inscribed with a permanent identification number providing traceability to the fuel contained in the assembly.

Similar traceability is provided for burnable absorber rods, source rods, and control rodlets, as required.

4.2.1.4.3 Onsite Inspection

Surveillance of fuel and reactor performance is routinely conducted on Westinghouse reactors. Power distribution is monitored using the excore fixed and incore movable detectors. Coolant activity and chemistry is followed which permits early detection of any fuel clad defects.

Visual fuel inspection is routinely conducted during refueling. Additional fuel inspections are dependent on the results of the operational monitoring and the visual inspections.

4.2.1.4.4 Removable Fuel Rod Assembly

As part of a continuing Westinghouse fuel performance evaluation program, one surveillance fuel assembly containing 88 removable fuel rods is included in Region III of the initial Sequoyah core loading. The objective of this program is to facilitate interim and end-of-life fuel evaluation as a

function of exposure. The rods can be removed, nondestructively examined, and reinserted at the end of intermediate fuel cycles. At end-of-life the rods can be removed easily and subjected to a destructive examination.

The overall dimensions, rod pitch, number of rods and materials are the same as for other Region III assemblies. These fueled rods were fabricated in parallel with the regular Region III rods using selected Region III clad and pellets assembled, and released to the same manufacturing tolerance limits. Mechanically the special assemblies differ only slightly from other Region III assemblies. These differences are:

1. The end plugs on the removable rods are designed to facilitate removal and reinsertion.

2. The upper nozzle adapter plate on the assembly is modified to allow access to the removable rods.

3. The base plate on the thimble plug assembly is modified to provide axial restraint of the fuel rods normally provided by the upper nozzle adapter plate for standard assemblies. The distances between the top of the rods and the restraining plates, for both types of rods in the removable rod assembly, are identical to those of the standard assembly.

Figure 4.2.1-10 compares the mechanical design of a removable fuel rod to that of a standard rod; Figure 4.2.1-11 shows the removable rod fuel assembly, the modified upper nozzle adapter plate and thimble plug assembly, to compare to a standard assembly shown in Figure 4.2.1-2. The location of the removable rods within the fuel assembly is shown in Figure 4.2.1-12.

Previous experience with removable rods has been attained at Saxton, Yankee, San Onofre Zorita, Zion Units 1 and 2, Point Beach Unit 1, H. B. Robinson Unit 2, Trojan and Surry Units 1 and 2 reactors. Handling of removable rods have been done routinely and without difficulty.

The same fuel rod design limits indicated in Section 4.2.1 for standard fuel rods and assemblies are maintained for these removable rods. Over the active fuel length, the removable rod cladding and pellet dimensions and enrichment are identical to other rods in the same fuel region. Therefore, there is no reduction in margin to DNB or other thermal limits. Their inclusion in the initial Sequoyah Unit 1 core loading introduces no additional safety considerations and in no way changes the safeguard analyses and related engineering information presented in previously submitted material in support of the license application.

4.2.2 Reactor Vessel Internals

4.2.2.1 Design Bases

The design bases for the mechanical design of the reactor vessel internals components are as follows:

1. The reactor internals in conjunction with the fuel assemblies shall direct reactor coolant through the core to achieve acceptable flow distribution and to restrict bypass flow so that the heat transfer performance requirements are met for all modes of operation. In addition,

required cooling for the pressure vessel head shall be provided so that the temperature differences between the vessel flange and head to do not result in leakage from the flange during reactor operation.

2. In addition to neutron shielding provided by the reactor coolant, a separate thermal shield is provided to limit the exposure of the pressure vessel in order to maintain the required ductility of the material for all modes of operation for the life of the plant.

3. Provisions shall be made for installing incore instrumentation useful for the plant operation and vessel material test specimens required for a pressure vessel irradiation surveillance program.

4. The core internals are designed to withstand mechanical loads arising from the SSE and 1/2SSE and pipe ruptures and meet the requirement of Item 5 below.

5. The reactor shall have mechanical provisions which are sufficient to adequately support the core and internals and to assure that the core is intact with acceptable heat transfer geometry following transients arising from abnormal operating conditions.

6. Following the design basis accident, the plant shall be capable of being shutdown and cooled in an orderly fashion so that fuel cladding temperature is kept within specified limits. This implies that the deformation of certain critical reactor internals must be kept sufficiently small to allow core cooling.

7. UHI upper internals assembly were originally installed to provide passage for the core cooling water from the vessel head plenum directly to the top of the fuel assemblies during the postulated "loss-of-coolant accident." However, the UHI System has been removed. Some UHI-related components remain installed in the RCS.

The functional limitations for the core structures during the design basis accident are shown in Table 4.2.2-1. To insure no column loading of rod cluster control guide tubes, the upper core plate deflection is limited to not exceed the value shown in Table 4.2.2-1.

Details of the dynamic analyses, input forcing functions, and response loadings are presented in Section 3.9.

4.2.2.2 Description and Drawings

The reactor vessel internals are described as follows:

The components of the reactor internals consist of the lower core support structure (including the entire core barrel and thermal shield), the upper core support structure and the incore instrumentation support structure. The reactor internals support the core, maintain fuel alignment, limit fuel assembly movement, maintain alignment between fuel assemblies and control rod drive mechanisms, direct coolant flow past the fuel elements, direct coolant flow to the pressure vessel head, provide gamma and neutron shielding, and provide guides for the incore instrumentation. The coolant flows from the vessel inlet nozzles down the annulus

between the core barrel and the vessel wall and then into a plenum at the bottom of the vessel. It then reverses and flows up through the core support and through the lower core plate. The lower core plate is sized to provide the desired inlet flow distribution to the core. After passing through the core, the coolant enters the region of the upper support structure and then flows radially to the core barrel outlet nozzles and directly through the vessel outlet nozzles. A small portion of the coolant flows between the baffle plates and the core barrel to provide additional cooling of the barrel. Similarly, a small amount of the entering flow is directed into the vessel head plenum and exits through the vessel outlet nozzles.

All the major material for the reactor internals is Type 304 stainless steel. Parts not fabricated from Type 304 stainless steel include bolts and dowel pins which are fabricated from Type 316 stainless steel. The radial support clevis insert and bolts which are fabricated of inconel. The only stainless steel materials used in the reactor core support structures which have yield strengths greater than 90,000 pounds are the 403 series used for holddown springs. The use of these materials is compatible with the reactor coolant and is acceptable based on the 1971 ASME Boiler and Pressure Vessel Code, Case Number 1337.

All reactor internals are removable from the vessel for the purpose of their inspection as well as the inspection of the vessel internal surface.

Lower Core Support Structure

The major containment and support member of the reactor internals is the lower core support structure, shown in Figure 4.2.2-1. This support structure assembly consists of the core barrel, the core baffle, and the lower core plate and support columns, the thermal shield, and the core support which is welded to the core barrel. All the major material for this structure is Type 304 stainless steel. The lower core support structure is supported at its upper flange from a ledge in the reactor vessel and its lower end is restrained from transverse motion by a radial support system attached to the vessel wall. Within the core barrel are an axial baffle and a lower core plate, both of which are attached to the core barrel wall and form the enclosure periphery of the core. The lower core support structure and core barrel serve to provide passageways and direct the coolant flow. The lower core plate is positioned at the bottom level of the core below the baffle plates and provides support and orientation for the fuel assemblies.

The lower core plate is a member through which the necessary flow distribution holes for each fuel assembly are machined. Fuel assembly locating pins (two for each assembly) are also inserted into this plate. Columns are placed between the lower core plate and the core support of the core barrel to provide stiffness and to transmit the core load to the core support. Adequate coolant distribution is obtained through the use of the lower core plate and core support.

The one piece thermal shield is fixed to the core barrel at the top with rigid bolted connections. The bottom of the thermal shield is connected to the core barrel by means of axial flexures. This bottom support allows for differential axial growth of the shield/core barrel but restricts radial or horizontal movement of the bottom of the shield. Rectangular specimen guides in which material samples can be inserted and irradiated during reactor operation are welded to the thermal shield and extended to the top of the thermal shield. These samples are held in the rectangular specimen guides by a preloaded spring device at the top and bottom.

Vertically downward loads from weight, fuel assembly preload, control rod dynamic loading, hydraulic loads and earthquake acceleration are carried by the lower core plate into the lower core plate support flange on the core barrel shell and through the lower support columns to the core support and hence through the core barrel shell to the core barrel flange supported by the vessel flange. Transverse loads from earthquake acceleration, coolant cross flow, and vibration are carried by the core barrel shell and distributed between the lower radial support to the vessel wall, and to the vessel flange. Transverse loads of the fuel assemblies are transmitted to the core barrel shell by direct connection of the lower core plate to the barrel wall and by upper core plate alignment pins which are welded into the core barrel.

The radial support system of the core barrel is accomplished by "key" and "keyway" joints to the reactor vessel wall. At six equally spaced points around the circumference, an Inconel clevis block is welded to the vessel inner diameter. Another Inconel block is bolted to each of these blocks, and has a "keyway" geometry. Opposite each of these is a "key" which is welded to the lower core support. At assembly, as the internals are lowered into the vessel, the keys engage the keyways in the axial direction. With this design, the internals are provided with a support at the furthest extremity, and may be viewed as a beam fixed at the top and simply supported at the bottom.

Radial and axial expansions of the core barrel are accommodated, but transverse movement of the core barrel is restricted by this design. With this system, cyclic stresses in the internal structures are within the ASME Section III limits. In the event of an abnormal downward vertical displacement of the internals following a hypothetical failure, energy absorbing devices limit the displacement of the core after contacting the vessel bottom head. The load is then transferred through the energy absorbing devices of the lower internals to the vessel.

The energy absorbers are mounted on a base plate which is contoured on its bottom surface to the reactor vessel bottom internal geometry. Their number and design are determined so as to limit the stresses imposed on all components except the energy absorber to less than yield (ASME Code Section III valves). Assuming a downward vertical displacement, the potential energy of the system is absorbed mostly by the strain energy of the energy absorbing devices.

Upper Core Support Assembly

The upper core support structure, shown in Figures 4.2.2-2, 4.2.2-3, and 4.2.2-4 consists of the upper support assembly and the upper core plate between which are contained support columns and guide tube assemblies. The support columns establish the spacing between the top support plate assembly and the upper core plate and are fastened at top and bottom to these plates. The UHI support columns serve to transmit the fuel assembly holddown loads from the upper core plate to the upper support and thence to the vessel flange. They position the upper core plate and upper support which act as the boundaries for the flow plenum at the outlet of the core. Additionally each UHI column has a central axial flow passage full length. Water can enter the flow passage through a small hole on the side of the top of the UHI support column. A support column is provided at each fuel assembly position that does not contain accommodation for a control rod with the exception of the peripheral low power fuel assembly locations. The fuel assemblies which do not have a support column above them are located in front of the inlet and outlet nozzles of the vessel. The UHI support columns also contain thermocouple supports. Figure 4.2.2-3 illustrates a typical UHI support column.

The guide tube assemblies (see Figures 4.2.2-2 and 4.2.2-5) shield and guide the control rod drive rods and control rods. They are fastened to the upper support and are guided by pins in the upper core plate for proper orientation and support. Additional guidance for the control rod drive rods is provided by the upper guide tube extension which is attached to the upper support. All plants designed with UHI have the maximum number of guide tubes independent of other RCC requirements.

The upper core support assembly, which is removed as a unit during refueling operation, is positioned in its proper orientation with respect to the lower support structure by slots in the upper core plate which engage flat-sided upper core plate alignment pins which are welded into the core barrel. At an elevation in the core barrel where the upper core plate is positioned, the flat-sided pins are located at angular positions of 90° from each other. As the upper support structure is lowered into the lower internals, the slots in the plate engage the flat-sided pins axial direction. Lateral displacement of the plate and of the upper support assembly is restricted by this design. Fuel assembly locating pins protrude from the bottom of the upper core plate and engage the fuel assemblies as the upper assembly is lowered into place. Proper alignment of the lower core support structure, the upper core support assembly, the fuel assemblies and control rods are thereby assured by this system of locating pins and guidance arrangement. The upper core support assembly is restrained from any axial movements by a large circumferential spring which rests between the upper barrel flange and the upper core support assembly. The spring is compressed when the reactor vessel head is installed on the pressure vessel.

Vertical loads from weight, earthquake acceleration, hydraulic loads, and fuel assembly preload are transmitted through the upper core plate via the support columns to the upper support assembly and then into the reactor vessel head. Transverse loads from coolant cross flow, earthquake acceleration, and possible vibrations are distributed by the support columns to the upper support and upper core plate. The upper support plate is particularly stiff to minimize deflection.

Incore Instrumentation Support Structures

The incore instrumentation support structures consist of an upper system to convey and support thermocouples penetrating the vessel through the head and a lower system to convey and support flux thimbles penetrating the vessel through the bottom (Figure 7.7.1-5 shows the Basic Flux- Mapping System).

The upper system utilizes the reactor vessel head penetrations. Instrumentation port columns are slip-connected to in-line columns that are in turn fastened to the upper support plate. These port columns protrude through the head penetrations. The thermocouples are carried through these port columns and the upper support plate at positions above their readout locations. The thermocouple conduits are supported from the columns of the upper core support system. The thermocouple conduits are 304 stainless steel tubes.

In addition to the upper incore instrumentation, there are reactor vessel bottom port columns which carry the retractable, cold worked stainless steel flux thimbles that are pushed upward into the reactor core. Conduits extend from the bottom of the reactor vessel down through the concrete shield area and up to a thimble seal line. The minimum bend radii are about 144 inches and the trailing ends of the thimbles (at the seal line) are extracted at least 14 feet during

refueling of the reactor in order to avoid interference within the core. If the lower internals are to be removed, or potentially removed, then the thimbles are retracted approximately 23 feet. The thimbles are closed at the leading ends and serve as the pressure barrier between the reactor pressurized water and the containment atmosphere.

Mechanical seals between the retractable thimbles and conduits are provided at the seal table. During normal operation, the retractable thimbles are stationary and move only during refueling or for maintenance, at which time a space of at least 14 feet above the seal line is cleared for the retraction operation.

The incore instrumentation support structure is designed for adequate support of instrumentation and is rugged enough to resist damage or distortion under the conditions imposed by handling during the refueling sequence. These are the only conditions which affect the incore instrumentation support structure. Reactor vessel surveillance specimen capsules are covered in Paragraph 5.4.3.7. That section covers all the necessary details with regard to irradiation surveillance, including a cross-section of the reactor showing the capsule identity and location.

4.2.2.3 Design Loading Conditions

The design loading conditions that provide the basis for the design of the reactor internals are:

1. Fuel Assembly Weight
2. Fuel Assembly Spring Forces
3. Internals Weight
4. Control Rod Scram (equivalent static load)
5. Differential Pressure
6. Spring Preloads
7. Coolant Flow Forces (static)
8. Temperature Gradients
9. Differences in thermal expansion
   a. Due to temperature differences
   b. Due to expansion of different materials
10. Interference between components
11. Vibration (mechanically or hydraulically induced)
12. One or more loops out of service
13. All operational transients listed in Table 5.2-2
14. Pump overspeed
15. Seismic loads (operation basis earthquake and design basis earthquake)
16. Blowdown forces injection transients for the cold and hot leg break including UHI (UHI System has been removed and capped; however, all reactor vessel and loop blowdown forces are still considered)

Combined seismic and blowdown forces are included in the stress analysis as a design loading condition by assuming the maximum amplitude of each force to act concurrently.

The main objectives of the design analysis are to satisfy allowable stress limits, to assure and adequate design margin, and to establish deformation limits which are concerned primarily with the functioning of the components. The stress limits are established not only to assure that peak

stresses will not reach unacceptable values, but also limit the amplitude of the oscillatory stress component in consideration of fatigue characteristics of the materials. Both low and high cycle fatique stresses are considered when the allowable amplitude of oscillation is established. Dynamic analysis on the reactor internal is provided in Section 3.9.

As part of the evaluation of design loading conditions, extensive testing and inspections are performed from the initial selection of raw materials up to and including component installation and plant operation. Among these tests and inspections are those performed during component fabrication, plant construction, startup and checkout, and during plant operation.

4.2.2.4 Design Loading Categories

The combination of design loadings fits into either the normal, upset or faulted conditions as defined in the ASME Section III Code.

Loads and deflections imposed on components due to shock and vibration are determined analytically and experimentally in both scaled models and operating reactors. The cyclic stresses due to these dynamic loads and deflections are combined with the stresses imposed by loads from component weights, hydraulic forces, and thermal gradients for the determination of the total stresses of the internals.

The reactor internals are designed to withstand stresses originating from various operating conditions as summarized in Table 5.2-2.

The scope of the stress analysis problem is very large requiring many different techniques and methods, both static and dynamic. The analysis performed depends on the mode of operation under consideration.

Allowable Deflections

For normal operating conditions, downward vertical deflection of the lower core support plate is negligible.

For the loss of coolant accident plus the 1/2 safe shutdown earthquake condition, the deflection criteria of critical internal structures are the limiting values given in Table 4.2.2-1. The corresponding no loss of function limits are included in Table 4.2.2-1 for comparison purposes with the allowed criteria.

The criteria for the core drop accident are based upon analyses which have been performed to determine the total downward displacement of the internal structures following a hypothesized core drop resulting from loss of the normal core barrel supports. The initial clearance between the secondary core support structures and the reactor vessel lower head in the hot condition is approximately one-half inch. An additional displacement of approximately 3/4 inch would occur due to strain of the energy absorbing devices of the secondary core support; thus the total drop distance is about 1-1/4 inches which is insufficient to permit the grips of the rod cluster control assembly to come out of the guide thimble in the fuel assemblies.

Specifically, the secondary core support is a device which will never be used, except during a hypothetical accident of the core support (core barrel, flange, etc.). There are 4 supports in each reactor. This device limits the fall of the core and absorbs the energy of the fall is calculated assuming a complete and instantaneous failure of the primary core support and is absorbed during the plastic deformation of the controlled volume of stainless steel, loaded in tension. The maximum deformation of this austenitic stainless piece is limited to approximately 15 percent, after which a positive stop provided to insure support.

For additional information on design loading categories, see Section 3.9.

4.2.2.5 Design Criteria Basis

The basis for the design stress and deflection criteria is identified below:

Allowable Stress

For normal operating conditions, Section III of the ASME Nuclear Power Plant Components Code is used as a basis for evaluating acceptability of calculated stresses. Both static and alternating stress intensities are considered. Under code case 1618 bolt material type 316 Stainless Steel is now covered in ASME Section III and is so treated. It should be noted that the allowable stresses in Section III of the ASME Code are based on unirradiated material properties. In view of the fact that irradiation increases the strength of the 304 stainless steel used for the internals, although decreasing its elongation, it is considered that use of the allowable stresses in Section III is appropriate and conservative for irradiated internal structures.

The allowable stress limits during the design basis accident used for the core support structures are based on the January 1971 draft of the ASME Code for Core Support Structures, Subsection NG, and the Criteria for Faulted Conditions.

4.2.3 Reactivity Control System

4.2.3.1 Design bases

4.2.3.1.1 Design Stresses

A basis for temperature, stress on structural members, and material compatibility are imposed on the design of the reactivity control components. The reactivity control system is designed to withstand stresses originating from various operating conditions as summarized in Table 5.2-2.

Allowable Stresses: For normal operating conditions Section III of the ASME Boiler and Pressure Vessel Code is used as a general guide.

Dynamic Analysis: The cyclic stresses due to dynamic loads and deflections are combined with the stresses imposed by loads from component weights, hydraulic forces and thermal gradients for the determination of the total stresses of the reactivity control system.

4.2.3.1.2 Material Compatibility

Materials are selected for compatibility in Pressurized Water Reactor environment, for adequate mechanical properties at room and operating temperature, for resistance to adverse property changes in a radioactive environment, and for compatibility with interfacing components.

4.2.3.1.3 Reactivity Control Components

The reactivity control components are subdivided into two categories:

1. Permanent devices used to control or monitor the core and

2. Temporary devices used to control or monitor the core

The permanent type components are the rod cluster control assemblies, control rod drive mechanism assemblies, neutron source assemblies and thimble plug assemblies. Although the thimble plug assembly does not directly contribute to the reactivity control of the reactor, it is presented as a reactivity control system component in this document because it may be used to restrict bypass flow through those thimble not occupied by absorber, source of burnable absorber rods.

The temporary component is the burnable absorber assembly which is normally used only for one cycle. The design bases for each of the mentioned components are in the following paragraphs.

Absorber Rods

Absorber rods from Westinghouse (both standard and enhanced performance) and AREVA/Framatome are used at Sequoyah. Framatome absorber rods were purchased in 2001 and similar AREVA/Framatome absorber rods were purchased in 2016. Westinghouse absorber rods were purchased before the AREVA/Framatome rods. Significant differences between the two types of absorber rods are provided in Section 4.2.3.2.1.

The following are considered design conditions under subsections NG and NB of the ASME Boiler and Pressure Vessel Code Section III. The control rod which is cold rolled 304, stainless is the only non-code material use in the control rod assembly. The stress intensity limit S_m for this material is defined at 2/3 of the 0.2% offset yield stress. The absorber rods are designed to resist the following:

1. The external pressure equal to the Reactor Coolant System operating pressure

2. The wear allowance equivalent to 1,000 reactor trips

3. Bending of the rod due to a misalignment in the guide tube

4. Forces imposed on the rods during rod drop

5. Loads caused by accelerations imposed by the control rod drive mechanism

6. Radiation exposure for maximum core life

7. Temperature effects at operating conditions

The absorber material temperature shall not exceed its melting temperature (1470°F for Ag-In-Cd absorber material) (Reference 12).

The Westinghouse designed enhanced performance RCCA (EPRCCA) may be used in place of the standard RCCA in reload cores. Reference 21 verifies that the EPRCCA design meets rod cluster control assembly design criteria.

Burnable Absorber Rods

The burnable absorber rod clad is designed using subsections NB and NG of the ASME Boiler and Pressure Vessel Code Section III, 1973 as a general guide for Conditions I and II. For abnormal loads during Condition III and IV Code stresses are not considered limiting. Failures of the burnable rods during these conditions must not interfere with reactor shutdown or emergency cooling of the fuel rods.

The burnable absorber material is non-structural. The structural elements of the burnable absorber rod are designed to maintain the absorber geometry even if the absorber material is fractured. The rods are designed so that the absorber material is below its softening temperature (1492°F) for Reference 12. In addition, the structural elements are designed to prevent excessive slumping.

The Westinghouse designed wet annular burnable absorber (WABA) is used in reload cores. Reference 16 verifies that WABA design meets burnable absorber design criteria.

Neutron Source Rods

The neutron source rods are designed to withstand the following:

1. The external pressure equal to the Reactor Coolant System operating pressure and

2. An internal pressure equal to an initial prepressurization and the pressure generated by released gases over the source rod life.

Thimble Plug Assembly

The thimble plug assemblies satisfy the following:

1. Accommodate the differential thermal expansion between the fuel assembly and the core internals

2. Maintain positive contact with the fuel assembly and the core internals

3. Limit the flow through each occupied thimble

4.2.3.1.4 Control-Rod Drive Mechanisms

The Pressure Vessel Assembly consists of Class I components designed to meet the stress requirements for normal operating conditions of Section III of the ASME Boiler and Pressure

Vessel Code. Both static and alternating stress intensities are considered. The stresses originating from the required design transients are included in the analysis.

A dynamic seismic analysis is required on the control rod drive mechanism when a seismic disturbance has been postulated to confirm the ability of the mechanism to meet ASME Code, Section III allowable stresses and to confirm its ability to trip when subjected to the seismic disturbance.

The control rod drive mechanism (CRDM) design used for the 17 x 17 fuel assembly control rods is identical to the 15 x 15 control rod drive mechanism. The seismic analysis and response of the 17 x 17 control rod drive mechanism will be identical to those of the 15 x 15 mechanism.

Control Rod Drive Mechanism Operational Requirements

The basic operational requirements for the Control Rod Drive Mechanisms are:

1. 5/8 inch step

2. 144 inch nominal travel

3. 360 pound maximum load

4. Step in or out at 45 inches/min (72 steps/min), maximum

5. Power interruption shall initiate release of drive rod assembly

6. Trip delay of less than 150 ms - Free fall of drive rod assembly shall begin less than 150 ms after power interruption no matter what holding or stepping action is being executed with any load and coolant temperatures of 100°F to 550°F.

7. 40 year design life with normal refurbishment

8. 28,000 complete travel excursions which are 13 x 10^{6} steps with normal refurbishment

4.2.3.2 Design Description

Reactivity control is provided by neutron absorbing rods and a soluble chemical neutron absorber (boric acid). The boric acid concentration is varied to control long-term reactivity changes such as:

1. Fuel depletion and fission product buildup

2. Cold to Hot, zero power reactivity change

3. Reactivity change produced by intermediate-term fission products such as xenon and samarium

4. Burnable poison depletion

Chemical and Volume Control is covered in Subsection 9.3.4.

The rod cluster control assemblies provide reactivity control for:

1. Shutdown

2. Reactivity changes due to coolant temperature changes in the power range

3. Reactivity changes associated with the power coefficient of reactivity

4. Reactivity changes due to void formation

If soluble boron were the sole means of control, the moderator temperature coefficient would be positive. It is desirable to have a negative moderator temperature coefficient throughout the entire cycle in order to reduce possible deleterious effects caused by a positive coefficient during loss of coolant or loss of flow accidents. This is accomplished by installation of burnable poison assemblies or IFBA rods.

The neutron sources assemblies provide a means of monitoring the core during periods of low neutron activity.

The most effective reactivity control components are the rod cluster control assemblies and their corresponding drive rod assemblies which are the only kinetic parts in the reactor. Figure 4.2.2-5 identifies the rod cluster control and drive rod assembly, in addition to the arrangement of these components in the reactor relative to the interfacing fuel assembly, guide tubes, and control rod drive mechanism. In the following paragraphs, each reactivity control component is described in detail except for IFBA rods which are discussed in section 4.2.1.2.1.

The guidance system for the rod cluster control assembly is provided by the guide tube as shown in Figure 4.2.2-5. The guide tube provides two regimes of guidance. 1) In the lower section a continuous guidance system provides support immediately above the core. This system protects the rod against excessive deformation and wear due to hydraulic loading. 2) The region above the continuous section provides support and guidance at uniformly spaced intervals.

The envelope of support is determined by the pattern of the rod cluster control assembly as shown in Figure 4.2.3-1. The guide tube ensures alignment and support of the control rods, spider body, and drive rod assembly while maintaining trip times at or below required limits.

4.2.3.2.1 <u>Reactivity Control Components</u>

<u>Rod Cluster Control Assembly</u>

The rod cluster control assemblies are divided into two categories:
control and shutdown. The control groups compensate for reactivity changes
due to variation in operating conditions of the reactor, i.e., power and temperature variations.

Two criteria have been employed for selection of the control groups. First the total reactivity worth must be adequate to meet the nuclear requirements of the reactor. Second, in view of the fact that some of these rods may be partially inserted at power operation, the total power peaking factor should be low enough to ensure that the power capability is met. The control and shutdown groups provide adequate shutdown margin which is defined as the instantaneous amount of reactivity by which the reactor is subcritical or would be subcritical from its present condition assuming all full length rod cluster assemblies (shutdown and control) are fully inserted except for the single rod cluster assembly of highest reactivity worth which is assumed to be fully withdrawn.

A rod cluster control assembly comprises a group of individual neutron absorber rods fastened at the top end to a common spider assembly, as illustrated in Figure 4.2.3-1.

The absorber material used in the control rods is silver-indium-cadmium alloy which is essentially "black" to thermal neutrons and has sufficient additional resonance absorption to significantly increase its worth. The alloy is in the form of extruded rods which are sealed in stainless steel tubes to prevent the rods from coming in direct contact with the coolant. In construction, the silver-indium-cadmium rods are inserted into cold-worked stainless steel tubing which is then sealed at the bottom and the top by welded end plugs. Sufficient diametral and end clearance is provided to accommodate relative thermal expansions.

The bottom plugs are made bullet-nosed to reduce the hydraulic drag during reactor trip and to guide smoothly into the dashpot section of the fuel assembly guide thimbles. The upper plug is threaded for assembly to the spider and has a reduced end section to make the joint more flexible.

The spider assembly is in the form of a central hub with radial vanes containing cylindrical fingers from which the absorber rods are suspended. Handling grooves and internal grooves for connection to the drive rod assembly coupling are machined into the upper end of the hub. A coil spring inside the spider body absorbs the impact energy at the end of a trip insertion. The radial vanes are joined to the hub and the fingers are joined to the vanes by furnace brazing. A centerpost which holds the spring and its retainer is threaded into the hub within the skirt and welded to prevent loosening in service. All components of the spider assembly are made from type 304 and 308 stainless steel except for the retainer which is of 17-4 PH material and the springs which are Inconel 718 alloy or oil tempered carbon steel where the springs do not contact the coolant.

The absorber rods are fastened securely to the spider to assure trouble free service. The rods are first threaded into the spider fingers and then pinned to maintain joint tightness, after which the pins are welded in place. The end plug below the pin position is designed with a reduced section to permit flexing of the rods to correct for small operating or assembly misalignments.

The overall length is such that when the assembly is withdrawn through its full travel the tips of the absorber rods remain engaged in the guide thimbles so that alignment between rods and thimbles is always maintained. Since the rods are long and slender, they are relatively free to conform to any small misalignments with the guide thimble.

Differences between the Westinghouse and AREVA/Framatome RCCA's are:

AREVA/Framatome RCCA spiders are a one-piece casting that includes vanes and fingers made of 316L stainless steel. The other spider assembly components are made from type 304 and 308 stainless steel. The 24 control rods are attached to the spider by a nut and pin combination. The upper end plug extension shank is first pinned to the spider boss then a nut is torqued and lock welded in place to prevent rotation.

AREVA/Framatome RCCA clad material is 316L stainless steel. The cladding surfacing is ion-nitrided.

Burnable Poison Assembly

Each burnable absorber assembly consists of borosilicate or WABA burnable absorber rods attached to a hold down assembly. Conceptual burnable absorber assemblies (containing borosilicate absorber) are shown in Figure 4.2.3.2. WABA rods may be used in place of the borosilicate absorber rods.

The borosilicate absorber rods consist of borosilicate glass tubes contained within Type 304 stainless steel tubular cladding which is plugged and seal welded at the ends to encapsulate the glass. The glass is also supported along the length of its inside diameter by a thin wall tubular inner liner. The top end of the liner is open to permit the diffused helium to pass into the void volume and the liner overhangs the glass. A typical borosilicate burnable absorber rod is shown in longitudinal and transverse cross-section in Figure 4.2.3-2a.

A WABA rod (Figure 4.2.3-3) consists of annular pellets of alumina-boron carbide ($A1_20_3$-B_4C) burnable absorber material contained within two concentric Zircaloy tubes. These Zircaloy tubes, which form the inner and outer clad for the WABA rod, are plugged and welded at each end to encapsulate the annular stack of absorber material. The assembled rod is then internally pressurized to 650 psig and seal welded. The absorber stack lengths are positioned axially within the WABA rods by the use of Zircaloy bottom-end spacers. An annular plenum is provided within the rod to accommodate the helium gas released from absorber material depletion during irradiation. Further design details are given in Section 3.0 Reference 16.

WABA rods with a reduced length of burnable absorber are also used. Figures 4.2.3-3B and 4.2.3-3C show the WABA rod and assembly, respectively. The length of the absorber stack in a WABA rod is reduced from 134 inches to 132 inches and the spacer length is adjusted to keep the absorber stack centered at the core midplane at beginning of life hot full power conditions.

The burnable absorber rods are statically suspended and positioned in selected guide thimbles within the fuel assemblies. The absorber rods in each assembly are attached together at the top end of the rods to a hold down assembly by a flat, perforated retaining plate which fits within the fuel assembly top nozzle and rests on the adapter plate. The absorber rod assembly is held down and restrained against vertical motion through a spring pack which is attached to the plate and is compressed by the upper core plate when the reactor upper internals assembly is lowered into the reactor. This arrangement ensures that the absorber rods cannot be ejected from the core by flow forces. Each rod is permanently attached to the base plate by a nut which is crimped into place.

The borosilicate rod cladding is slightly cold worked Type 304 stainless steel, and the WABA rod cladding is Zircaloy-4. All other structural materials are Types 304 and 308 stainless steel except for the springs which are Inconel-718. The borosilicate glass tube provides sufficient boron content to meet the criteria discussed in Section 4.3.1.3.

Neutron Source Assembly

The purpose of the neutron source assembly is to provide a base neutron level to insure that the detectors are operational and responding to core multiplication neutrons. Since there is very little neutron activity during loading, refueling, shutdown, and approach to criticality, a neutron source is placed in the reactor to provide a neutron count of at least 0.5 counts per second on the

source range detectors attributable to core neutrons. The detectors, called source range detectors, are used primarily when the core is subcritical and during special subcritical modes of operations.

The source assembly also permits detection of changes in the core multiplication factor during core loading refueling, and approach to criticality. This can be done since the multiplication factor is related to an inverse function of the detector count rate. Therefore a change in the multiplication factor can be detected during addition of fuel assemblies while loading the core, a change in control rod positions, and changes in boron concentration.

Both primary and secondary neutron source rods are used. The primary source rod, containing a radioactive material, spontaneously emits neutrons during initial core loading and reactor startup. After the primary source rod decays beyond the desired neutron flux level, neutrons are then supplied by the secondary source rod.

The initial Sequoyah reactor core employed six source assemblies; two primary source assemblies and four secondary source assemblies. Each primary source assembly contained one primary source rod and twelve burnable poison rods. Each secondary source assembly contained a symmetrical grouping of four or six secondary source rods and zero or twenty burnable poison rods. Locations not filled with a source or burnable poison rod contained a thimble plug. Source assemblies are shown in Figures 4.2.3-4 and 4.2.3-5a&b. For subsequent reloads, primary sources are removed and secondary sources provide the necessary neutron count. The original four rod secondary source assembles have been replaced with 6 source rods per assembly.

Neutron source assemblies are employed at diametrically opposite sides of the core. The assemblies are inserted into the rod cluster control guide thimbles in fuel assemblies at selected unrodded locations.

The primary and secondary source rods both utilize the same cladding material as the absorber rods. The secondary source rods contain Sb-Be pellets stacked to a height of approximately 88 inches. The primary source rods contain capsules of Californium (Pu-Be is a possible alternate) source material and alumina spacer rods to position the source material within the cladding.

Secondary source assemblies may be composed of four single encapsulated source rodlets as shown in Figure 4.2.3-5a or six double encapsulated source rodlets as shown in Figure 4.2.3-5b. Externally, the two types of secondary sources appear no differently. In order to accommodate the double encapsulated source rodlet design, the Sb-Be pellets are of a slightly smaller diameter. This requires that two more source rodlets per assembly be used in order to achieve the same source strength as the single encapsulated secondary source. Both types have identical critical interface parameters and are completely interchangeable.

The other structural members are constructed of type 304 stainless steel except for the springs. The springs exposed to the reactor coolant are wound from an age hardened nickel base alloy for corrosion resistance and high strength. The springs, when contained within the rods when corrosion resistance is not necessary, are oil tempered carbon steel.

Thimble Plug Assembly

Fuel assemblies which do not contain either control rods, source rods, or burnable absorber rods, may be fitted with thimble plug assemblies.

The thimble plug assemblies as shown in Figure 4.2.3-6 consist of a flat base plate with short rods suspended from the bottom surface and a spring pack assembly. The twenty-four short rods, called thimble plugs, project into the upper ends of the guide thimbles. Similar short rods may also be used on the source assemblies and burnable absorber assemblies to plug the ends of all vacant fuel assembly guide thimbles. At installation in the core, the thimble plug assemblies interface with both the upper core plate and with the fuel assembly top nozzles by resting on the adaptor plate. The spring pack is compressed by the upper core plate when the upper internals assembly is lowered into place. Each thimble plug is permanently attached to the base plate by a nut which is locked to the threaded end of the plug by a small lock-pin welded to the nut or by crimping the nut.

All components in the thimble plug assembly, except for the springs, are constructed from type 304 stainless steel. The springs are wound from an age hardened nickel base alloy for corrosion resistance and high strength.

4.2.3.2.2 Control Rod Drive Mechanism (CRDM)

All parts of the control rod drive mechanism exposed to reactor coolant are made of metals which resist the corrosive action of the water. Three types of metals are used exclusively: stainless steels, Inconel-X and cobalt based alloys. Wherever magnetic flux is carried by parts exposed to the main coolant, 400 series stainless steel is used. Cobalt based alloys are used for the pins and latch tips. Inconel-X is used for the springs of latch assemblies and 304 stainless steel is used for all pressure retaining components. Hard chrome plating provides wear surfaces on the sliding parts and prevents galling between mating parts.

A rod position indicator coil stack assembly slides over the control rod drive mechanism rod travel housing. It detects the drive rod assembly position by means of 42 discrete coils that magnetically sense the entry and presence of the drive rod assembly over the normal length of the drive rod assembly travel.

Control Rod Drive Mechanism (CRDM)

Control rod drive mechanisms are located on the dome of the reactor vessel head. They are coupled to rod clusters control assemblies which have neutron absorber material over the entire length of the control rods and derive their name from this feature. The control rod drive mechanism is shown in Figure 4.2.3-7 and schematically in Figure 4.2.3-8.

The primary function of the control rod drive mechanism is to insert, withdraw, or hold rod cluster control assemblies within the core to control average core temperature and to shut down the reactor.

The control rod drive mechanism is a magnetically operated jack. A magnetic jack is an arrangement of three electro-magnets which are energized in controlled sequence by a power cycler to insert or withdraw rod cluster control assemblies in the reactor core in discrete steps.

The control rod drive mechanism consists of four separate sub-assemblies. They are the pressure vessel assembly, the coil stack assembly, the latch assembly, and the drive rod assembly.

1. The pressure vessel assembly includes a latch housing and a rod travel housing which are connected by a threaded, seal welded, maintenance joint which facilitates replacement of the latch assembly. The closure at the top of the rod travel housing is a threaded cap with a canopy seal weld. If canopy seal weld degradation is identified, a canopy clamp assembly may be installed to provide a permanent non-weld mechanism method of stopping leakage in the canopy seal weld.

   The latch housing is the lower portion of the pressure vessel and encloses the latch assembly. The rod travel housing is the upper portion of the pressure vessel and provides space for the drive rod assembly during its upward movement as the control rods are withdrawn from the core.

2. The coil stack assembly includes the coil housings, and electrical conduit and connector, and three operating coils; 1) the stationary gripper coil, 2) the moveable gripper coil, and 3) the lift coil.

   The coil stack assembly is a separate unit which is installed on the control rod drive mechanism by sliding it over the outside of the latch housing. It rests on the base of the latch housing without mechanical attachment.

   Energizing of the operation coils causes movement of the pole pieces and latches in the latch assembly.

3. The latch assembly includes the guide tube, stationary pole pieces, moveable pole pieces, and two sets of latches; 1) the moveable gripper latch, and 2) the stationary gripper latch.

   The latches engage grooves in the drive rod assembly. The moveable gripper latches are moved up or down in 5/8 inch steps by the lift pole to raise or lower the drive rod assembly. The stationary gripper latches hold the drive rod assembly while the moveable gripper latches are repositioned for the next 5/8 inch step.

4, The drive rod assembly includes a flexible coupling, a drive rod, a disconnect button, a disconnect rod assembly, and a locking button.

   The drive rod is machined with grooves on a 5/8 inch pitch which receive the latches during holding or moving of the drive rod assembly. The flexible coupling is attached to the drive rod and produces the means for coupling to the rod cluster control assembly.

   The disconnect button, disconnect rod assembly, and locking button provide positive locking of the coupling to the rod cluster control assembly and permits remote disconnection of the drive rod assembly.

The control rod drive mechanism is a trip design. Tripping can occur during any part of the power cycler sequencing if power to the coils is interrupted.

The control rod drive mechanism is treaded and seal welded on a head adaptor on top of the reactor vessel head and is coupled to the rod cluster control assembly directly below.

The mechanism is capable of handling a 360 pound load, including the drive rod assembly weight, at a maximum rate of 45 inches/minute. Withdrawal of the rod cluster control assembly is accomplished by magnetic forces while insertion is by gravity.

The mechanism internals are designed to operate in 650°F reactor coolant. The pressure vessel assembly is designed to contain reactor coolant at 650°F and 2500 psia. The three operating coils are designed to operate at 392°F with forced air cooling required to maintain that temperature.

The control rod drive mechanism shown schematically in Figure 4.2.3-8 withdraws and inserts its control rod as electrical pulses are received by the operator coils. An ON or OFF sequence, repeated by silicon controlled rectifiers in the power programmer, causes either withdrawal of insertion of the control rod. Position of the drive rod assembly is measured by 42 discrete coils mounted on the rod position indicator coil stack assembly surrounding the rod travel housing. Each coil magnetically senses the entry and presence of the top of the ferro-magnetic drive rod assembly as it moves through the coil center line.

During plant operation the stationary gripper coil of the control rod drive mechanism holds the control rod withdrawn from the core in a static position until the movable gripper coil is energized.

<u>Rod Cluster Control Assembly Withdrawal</u>

The control rod is withdrawn by repetition of the following sequence of events:

1. Movable Gripper Coil - ON

   The latch locking plunger raises and swings the movable gripper latches into the drive rod assembly groove. A 1/16 inch axial clearance exists between the latch teeth and the drive rod.

2. Stationary Gripper Coil - OFF

   The force of gravity, acting upon the drive rod assembly and attached control rod, causes the stationary gripper latches and plunger to move downward 1/16 inch until the load of the drive assembly with attached control rod is transferred to the moveable gripper latches. The plunger continues to move downward and swings the stationary gripper latches out of the drive rod assembly groove.

3. Lift Coil - ON

   The 5/8 inch gap between the moveable gripper pole and the lift pole closes and the drive rod assembly with attached control rod raises one step length (5/8 inch).

4. Stationary Gripper Coil - ON

   The plunger raises and closes the gap below the stationary gripper pole. The three links, pinned to the plunger, swing and the stationary gripper latches into a drive rod assembly groove. The latches contact the drive rod assembly and lift it (and the attached control rod) 1/16 inch. The 1/16 inch vertical drive rod assembly movement transfers the drive rod assembly load from the movable gripper latches to the stationary gripper latches.

5. Movable Gripper Coil - OFF

   The latch locking plunger separates from the movable gripper pole under the force of a spring and gravity. Three links, pinned to the plunger, swing the three movable gripper latches out of the drive rod assembly groove.

6. Lift Coil - OFF

   The gap between the movable gripper pole and lift pole opens. The movable gripper latches drop 5/8 inch to a position adjacent to a drive rod assembly groove.

7. Repeat Step 1

   The sequence described above (1 through 6) is termed as one step or one cycle. The control rod moves 5/8 inch for each step or cycle. The sequence is repeated at a rate of up to 72 steps per minute and the drive rod assembly (which has a 5/8 inch groove pitch) is raised 72 grooves per minute. The control rod is thus withdrawn at a rate up to 45 inches per minute.

<u>Rod Cluster Control Assembly Insertion</u>

The sequence for control rod insertion is similar to that for control rod withdrawal, except the timing of lift coil ON and OFF is changed to permit lowering the control rod.

1. Lift Coil - ON

   The 5/8 inch gap between the movable gripper and lift pole closes. The movable gripper latches are raised to a position adjacent to a drive rod assembly groove.

2. Movable Gripper Coil - ON

   The latch locking plunger raises and swings the movable a gripper latches into a drive rod assembly groove. A 1/16 inch axial clearance exists between the latch teeth and the drive rod assembly.

3. Stationary Gripper Coil - OFF

   The force of gravity, acting upon the drive rod assembly and attached control rod, causes the stationary gripper latches and plunger to move downward 1/16 inch until the load of the drive rod assembly and attached control rod is transferred to the movable gripper latches. The plunger continues to move downward and swings the stationary gripper latches out of the drive rod assembly groove.

4. Lift Coil - OFF

   The force of gravity separates the movable gripper pole from the lift pole and the drive rod assembly and attached control rod drop down 5/8 inch.

5. Stationary Gripper - ON

   The plunger raises and closes the gap below the stationary gripper pole. The three links, pinned to the plunger, swing the three stationary gripper latches into a drive rod assembly groove. The latches contact the drive rod assembly and lift it (and the attached control rod) 1/16 inch. The 1/16 inch vertical drive rod assembly movement transfers the drive rod assembly load from the movable gripper latches to the stationary gripper latches.

6. Movable Gripper Coil - OFF

   The latch locking plunger separates from the movable gripper pole under the force of a spring and gravity. Three links, pinned to the plunger, swing the three movable gripper latches out of the drive rod assembly groove.

7. Repeat Step 1

   The sequence is repeated, as for control rod withdrawal, up to 72 steps per minute which gives a control rod insertion rate of 45 inches per minute.

<u>Holding and Tripping of the Control Rods</u>

During most of the plant operating time, the control rod drive mechanisms hold the control rods withdrawn from the core in a static position. In the holding mode, only one coil, the stationary gripper coil, is energized on each mechanism. The drive rod assembly and attached control rod hang suspended from the three latches.

If power to the stationary gripper coil is cut off, the combined weight of the drive rod assembly and the rod cluster control assembly is sufficient to move latches out of the drive rod assembly groove. The control rod falls by gravity into the core. The trip occurs as the magnetic field, holding the stationary gripper plunger half against the stationary gripper pole, collapses and the stationary gripper plunger half is forced down by the weight acting upon the latches. After the half is forced down by the weight acting upon the latches. After the drive rod assembly is released by the mechanism, it falls, freely until the control rods enter the buffer section of their thimble tubes.

4.2.3.3 Design Evaluation

4.2.3.3.1 Reactivity Control Components

The components are analyzed for loads corresponding to normal, upset, emergency and faulted conditions. The analysis performed depends on the mode of operation under consideration.

The scope of the analysis requires many different techniques and methods, both static and dynamic.

Some of the loads that considered on each component where applicable are as follows:

1. Control Rod Scram (equivalent static load)

2. Differential Pressure

3. Spring Preloads

4. Coolant Flow Forces (static)

5. Temperature Gradients

6. Difference in thermal expansion
   a. Due to temperature differences
   b. Due to expansion of different materials

7. Interference between components

8. Vibration (mechanically or hydraulically induced)

9. Loading conditions and stress limits as listed in Table 5.2-2

10. Pump Overspeed

11. Seismic Loads (Safe shutdown earthquake and 1/2 safe shutdown earthquake).

The main objective of the analysis is to satisfy allowable stress limits, to assure an adequate design margin, and to establish deformation limits which are concerned primarily with the functioning of the components. The stress limits are established not only to assure that peak stresses will not reach unacceptable values, but also limit the amplitude of the oscillatory stress component in consideration of fatigue characteristics of the materials. Standard methods of strength of materials are used to establish the stresses and deflections of these components. The dynamic behavior of the reactivity control components has been studied using experimental test data (D-Loop, Reference 10) and experience from operating reactors. The AREVA/Framatome RCCA design is similar enough to the Westinghouse design that the above analysts still applies.

Sufficient diametral and end clearances have been provided in the neutron absorber, burnable poison, and source rods to accommodate the relative thermal expansions between the enclosed material and the surrounding clad and end plugs. There is no warping induced in the

rods although the clearance offered by the guide thimble would permit a postulated warpage to occur without restraint on the rods. Bending is not considered in the analysis of the rods except for that associated with possible misalignment of the rod in the guide tube and flow induced vibration, which was performed for the AREVA/Frametome supplied rods. The radial and axial temperature profiles have been determined by considering gap conductance, thermal expansion, and neutron and/or gamma heating of the contained material as well as gamma heating of the clad. The maximum neutron absorber material temperature was found to be below the metting temperature of the absorber. Rod, guide thimble, and dashpot flow analysis performed indicates that the flow is sufficient to prevent coolant boiling and maintain clad temperatures at which the clad material has adequate strength to resist coolant operating pressures and rod internal pressures.

The Westinghouse designed wet annular burnable absorber (WABA) is used in reload cores. Reference 16 verifies that the WABA design meets burnable poison design criteria.

Analysis on the cluster control assembly spider indicates the spider is structurally adequate to withstand the various operating loads including the higher loads which occur during the control rod drive mechanism stepping action and rod drop.

The materials selected are considered to be the best available from the standpoint of resistance to irradiation damage and compatibility to the rector environment. The materials selected partially dictated the reactor environment (e.g., $C1^-$ control in the coolant). The current design type reactivity controls have been in service for as much as six years with no apparent degradation of construction materials.

At high fluences the austenitic materials increase in strength with a corresponding decreased ductility (as measured by tensile tests) but energy absorption (as measured by impact tests) remain quite high. Corrosion of the materials exposed to the coolant is quite low and proper control of $C1^-$ and O_2 in the coolant will prevent occurrence of stress corrosion. All of the austenitic stainless steel base materials used are processed and fabricated to preclude sensitization. Although the control rod spiders are fabricated by furnace brazing, the procedure used for the Westinghouse spider vanes requires that the pieces be rapidly cooled so that the time-at-temperature is minimized. The time that is spent by the control rod spiders in the sensitization range, 800 - 1500°F, is not more than 0.2 hours, as a maximum, during fabrication to preclude sensitization. The 17-4 PH parts for Westinghouse are all aged at highest standard aging temperature of 1100°F to avoid stress corrosion problems exhibited by aging at lower temperatures.

Analysis of the rod cluster control assemblies show that if the control rod drive mechanism pressure housing ruptures the rod cluster control assembly will be ejected from the core by the pressure differential of the operating pressure and ambient pressure across the drive rod assembly. The ejection is also predicted on the failure of control rod drive mechanism to retain the drive rod/rod cluster control assembly position. It should be pointed out that a control rod drive mechanism pressure housing rupture will cause the ejection of only one rod cluster control assembly with the other assemblies remaining in the core. Analysis for the Westinghouse spider vanes showed that a pressure drop in excess of 4000 psi must occur across a two-fingered vane to break the vane/spider body joint. Since the greatest pressure of the primary system coolant is only 2250 psi, a pressure drop in excess of 4000 psi could not be expected to occur. Thus, the ejection of the neutron absorber rods is not possible.

Ejection of a burnable poison or thimble plug assembly is conceivable based on the postulation on that the hold down bar fails and the base plate and burnable poison rods are severely deformed. In the unlikely event that failure of the hold down bar occurs, the upward displacement of the burnable poison assembly only permits the base plate to contact the upper core plate. In the case of the thimble plug assembly, the thimble plugs will partially remain in the fuel assembly guide thimbles thus maintaining a majority of the desired flow impedance. Further displacement of complete ejection would necessitate the square base plate and burnable poison rods be forced, thus plastically deformed, to fit up through a smaller diameter hole. It is expected that this condition requires a substantially higher force or pressure drop than that of the hold down bar failure.

Westinghouse experience with control rods, burnable poison rods, and source rods are discussed in Reference 2.

The mechanical design of the reactivity control components provides for the protection of the active elements to prevent the loss of control capability and functional failure of critical components. The components have been reviewed for potential failure and consequences of a functional failure of critical parts. The results of the Westinghouse review are summarized below.

1. The basic absorbing material is sealed from contact with the primary coolant and the fuel assembly and guidance surfaces by a high quality stainless steel clad. Potential loss of absorber mass or reduction in reactivity control material due to mechanical or chemical erosion or wear is therefore reliably prevented.

2. A breach of the cladding for any postulated reason does not result in serious consequences. The absorber material, silver-indium-cadmium, is relatively inert and would still remain remote from high coolant velocity regions. Rapid loss of material resulting in significant loss of reactivity control material would not occur.

3. The individually clad absorber rods are doubly secured to the retaining spider finger by the threaded joint and a welded lock pin. No failure of this joint has ever been experienced in functional testing or in years of actual service in operating plants such as San Onofre, Connecticut Yankee, Zorita, Beznau No. 1, Robert Emmett Ginna, etc.

   It should also be noted that in several instances of control rod jamming caused by foreign particles, the individual rods at the site of the jam have borne the full capacity of the control rod drive mechanism and higher impact loads to dislodge the jam without failure. The guide tube card/guide thimble arrangement is such that large loads are required to buckle individual control rods. The conclusion to be drawn from this experience is that this joint is extremely insensitive to potential mechanical damage. A failure of the joint would result in the insertion of the individual rod into the core. This results in reduced reactivity which is a fall safe condition. Further information is given in Reference 2.

4. The spider finger braze joint by which the individual rods are fastened to the vanes has also experienced the service described above and been subjected to the same jam freeing procedures also without failure. A failure of this joint would also result in insertion of the individual rod into the core.

5. The radial vanes are attached to the spider body again by a brazed joint. The joints are designed to a theoretical strength in excess of that of the components joined.

   It is a feature of the design that the guidance of the rod cluster control assembly is accomplished by the inner fingers of these vanes. They are therefore the most susceptible to mechanical damage. Since these vanes carry two rods, failure of the van-to-hub joint such as the isolated incidents at Connecticut-Yankee does not prevent the free insertion of the rod pair (Reference 2). Neither does such a failure interfere with the continuous free operation of the drive line, also as experienced at Connecticut-Yankee (Reference 2).

   Failure of the vans-to-hub joint of a single rod vane could potentially result in failure of the separated vane and rod to insert. This could occur only at withdrawal elevations where the spider is above the continuous guidance section of the guide tube (in the upper internals). A rotation of the disconnected vane could cause it to hang on one of the guide cards in the intermediate guide tube. Such an occurrence would be evident from the failure of the rod cluster control assembly to insert below a certain elevation but with free motion above this point.

   This possibility is considered extremely remote because the single rod vanes are subjected to only vertical loads and very light lateral reactions from the rods. The lateral loads are light even during a seismic event because the guide tube/guide thimble arrangement allows very limited lateral motion. The consequences of such a failure are not considered critical since only one drive line of the reactivity control system would be involved. This condition is readily observed and can be cleared at shutdown.

6. The spider hub being of single unit cylindrical construction is very rugged and of extremely low potential for damage. It is difficult to postulate any condition to cause failure. Should some unforeseen event cause fracture of the hub above the vanes, the lower portion with the vanes and rods attached would insert by gravity into the core causing reactivity decrease. The rod could then not be removed by the drive line, again a fail safe condition. Fracture below the vanes cannot be postulated since all loads, including scram impact, are taken above the vane elevation.

7. The rod cluster control rods are provided a clear channel for insertion by the guide thimbles of the fuel assemblies. All fuel rod failures are protected against by providing this physical barrier between the fuel rod and the intended insertion channel. Distortion of the fuel rods by bending cannot apply sufficient force to damage or significantly distort the guide thimble. Fuel rod distortion by swelling, though precluded by design, would be terminated by fracture before contact with the guide thimble occurs. If such were not the case, it would be expected that a force reaction at the point of contact would cause a slight deflection of the guide thimble. The radius of curvature of the deflected shape of the guide thimbles would be sufficiently large to have a negligible influence on rod cluster control assembly insertion.

   The Westinghouse designed enhanced performance RCCA (EPRCCA) may be used in place of the standard RCCA in reload cores. Reference 21 verifies that EPRCC design meets rod cluster control assembly design criteria.

   Framatome experience with control rods is discussed in References 23, 24, and 25.

Burnable Absorber Assemblies

The burnable absorber assemblies are static temporary reactivity control elements. The axial position is assured by the hold down assembly which bears against the upper core plate. Their lateral position is maintained by the guide thimbles of the fuel assemblies.

The individual rods are shouldered against the underside of the retainer plate and securely fastened at the top by a threaded nut which is then crimped or locked in place by a welded pin. The square dimension of the retainer plate is larger than the diameter of the flow holes through the core plate. Failure of the hold down bar or spring pack therefore does not result in ejection of the burnable poison rods from the core.

The only incident that could potentially result in ejection of the burnable absorber rods is a multiple fracture of the retainer plate. This not considered credible because of the light loads borne by this component. During normal operation the loads borne by the plate are approximately 5 lb/rod or a total of 100 lb. distributed at the points of attachment. Even a multiple fracture of the retainer plate would result in jamming of the plate segments against the upper core plate, again preventing ejection. Excessive reactivity increase due to burnable absorber ejection is therefore prevented.

The guide thimbles of the fuel assembly afford the same protection from damage due to fuel rod failures as that described for the rod cluster control assembly rods.

The Westinghouse designed wet annular burnable absorber (WABA) is used in reload cores. Reference 16 verifies that the WABA design meets burnable absorber design criteria.

Rods have performed very well in actual service with no failures observed through full life of one fuel cycle.

4.2.3.3.2 Control Rod Drive Mechanism (CRDM) Material Selection

All pressure retaining materials comply with Section III of the ASME Pressure vessel code, and will be fabricated from austenitic (304) stainless steel.

Magnetic pole pieces are fabricated from 410 stainless steel. All non-magnetic parts, except pins and springs, are fabricated from 304 stainless steel. Haynes 25 is used to fabricate link pins. Springs are made from Inconel-X. Latch arm tips are clad with Stellite 6 to provide improved wearability. Hard chrome plate and Stellite 6 are used selectively for bearing and wear surfaces.

At the start of the development program, a survey was made to determine whether a material better than 410 stainless steel was available for the magnetic pole pieces. Ideal material requirements are as follows:

1. High magnetic saturation value

2. High permeability

3. Low coercive force
4. High resistivity
5. High curie temperature
6. Corrosion resistant
7. High impact strength
8. Non-oriented
9. High machinability
10. Resistance to radiation damage

After a comprehensive material trade-off study was made it was decided that the 410 stainless steel was satisfactory for this application.

The cast coil housings require a magnetic material. Both low-carbon cast steel and ductile iron have been successfully tested for this application. The choice, made on the basis of cost, indicates ductile iron will be specified on the control rod drive mechanism. The finished housings are zinc plated to provide corrosion resistance.

Coils are wound on bobbins of molded Dow Corning 302 material, with double glass-insulated copper wire. Coils are then vacuum impregnated with silicon varnish. A wrapping of mica sheet is secured to the coil outer surface. The result is a well-insulated coil capable of sustained operation at 200 degrees centigrade.

The drive rod assembly utilizes a 410 stainless steel drive rod. The coupling is machined from 403 stainless steel. Other parts are 304 stainless steel with the exception of the springs which are Inconel-X and the locking button which is Haynes 25.

Radiation Damage

As required by the equipment specification, the control rod drive mechanisms are designed to meet a radiation requirement of 10 RADS/HR. Materials have been selected to meet this requirement.

The above radiation level which amounts to 1.753×10^6 RADS in twenty years will not limit control rod drive mechanism life. Control rod drive mechanisms at Yankee Rowe which have been in operation since 1960 have not experienced problems due to radiation.

Positioning Requirements

The mechanism has a step length of 5/8 inches which determines the positioning capabilities of the control rod drive mechanism. (Note: Positioning requirements are determined by reactor physics).

Evaluation of Materials Adequacy

The ability of the pressure vessel assembly components to perform throughout the design lifetime as defined in the equipment specification is confirmed by the stress analysis report required by the ASME Boiler and Pressure Vessel Code, Section III. Internal components subjected to wear will withstand a minimum of 2,500,000 steps without refurbishment as confirmed by life tests.

Results of Dimensional and Tolerance Analysis

With respect to the control rod drive mechanism systems as a whole, critical clearances are present in the following areas:

1. Latch assembly (Diametral clearances)

2. Latch arm-drive rod clearances

3. Coil stack assembly-thermal clearances

4. Coil fit in coil housing

The following write-up defines clearances that are designed to provide reliable operation in the control rod drive mechanism in these four critical areas. These clearances have been proven by life tests and actual field performance at operating plants.

1. Latch Assembly - Thermal Clearances

The magnetic jack has several clearances when parts made of 410 stainless steel fit over parts made from 304 stainless steel. Differential thermal expansion is therefore important. Minimum clearances of these parts at 68°F is 0.011 inches. At the maximum design temperature of 650°F minimum clearance is 0.0045 inches and at the maximum expected operating temperatures of 550°F is 0.0057 inches.

2. Latch Arm - Drive Rod Clearances

The control rod drive mechanism incorporates a load transfer action. The movable or stationary gripper latch is not under load during engagement, as previously explained, due to load transfer action.

Figure 4.2.3-9 shows latch clearance variation with the drive rod as a result of minimum and maximum temperatures. Figure 4.2.3-10 shows clearance variations over the design temperature range.

3. Coil Stack Assembly - Thermal Clearances

The assembly clearance of the coil stack assembly over the latch housing was selected so that the assembly could be removed under all anticipated conditions of thermal expansion.

At 70°F the inside diameter of the coil stack is 7.428/7.438 inches. The outside diameter of the latch housing is 7.39/7.38 inches.

Thermal expansion of the mechanism due to operating temperature of the control rod drive mechanism results in minimum inside diameter of the coil stack being 7.440 inches at 222°F and the maximum latch housing diameter being 7.426 inches at 650°F.

Under the extreme tolerance conditions listed above it is necessary to allow time for a 70°F coil housing to heat during a replacement operation.

Four similar type coil stack assemblies were removed from four hot control drive mechanism mounted on 11.035 inch centers on a 550°F test loop, allowed to cool, and then replaced without incident as a test to prove the preceding.

4. Coil Fit in Coil Housing

Control rod drive mechanism and coil housing clearances are selected so that coil heat up results in a close to tight fit. This is done to facilitate thermal transfer and coil cooling in a hot control rod drive mechanism.

4.2.3.4 Tests, Verification and Inspection

4.2.3.4.1 Reactivity Control Components

Tests and inspections are performed on each reactivity control component to verify the mechanical characteristics. In the case of the rod cluster control assembly, prototype testing has been conducted and both manufacturing test/inspections and functional testing at the plant site are performed.

During the component manufacturing phase, the following requirements apply to the reactivity control components to assure the proper functioning during reactor operation:

1. All materials are procured to specifications to attain the desired standard of quality.

2. A spider from each braze lot is proof tested by applying a 5000 pound load to the spider body, so that approximately 310 lbs is applied to each vane. This proof load provides a bending moment at the spider body approximately equivalent to 1.4 times the load caused by the acceleration imposed by the CRDM.

3. All clad/end plug welds are checked for integrity by visual inspection, X-ray, and are helium leak checked. All the seal welds in the neutron absorber rods, burnable poison rods and source rods are checked in this manner.

4. To assure proper fitup with the fuel assembly, the rod cluster control, burnable poison and source assemblies are installed in the fuel assembly and checked for binding in the dry condition.

The rod cluster assemblies are functionally tested, following initial core loading but prior to critically to demonstrate reliable operation of the assemblies. Each assembly is operated one time at no flow/cold conditions and one time at full flow/hot conditions. The assemblies are also trip tested at full flow/hot conditions. Those assemblies whose trip times fall outside a certain tolerance will be tested an additional 3 times at full flow/hot conditions. Thus each assembly is adequately tested to verify that the assemblies are properly functioning.

4.2.3.4.2 Control Rod Drive Mechanisms

Quality assurance procedures during production of control rod drive mechanisms include material selection, process control, mechanism component tests during production and hydrotests.

After all manufacturing procedures had been developed; several prototype control rod drive mechanisms and drive rod assemblies were life tested with the entire drive line under environmental conditions of temperature, pressure and flow. All acceptance tests were of duration equal to or greater than service required for the plant operation. All drive rod assemblies tested in this manner have shown minimal wear damage.

These tests include verification that the trip time achieved by the control rod drive mechanisms meet the design requirement for trip time from start of rod cluster control assembly motion to dashpot entry: This trip time requirement will be confirmed for each control rod drive mechanism prior to initial reactor operation and at periodic intervals after initial reactor operation. In addition, a Technical Specification has been set to ensure that the trip time requirement is met.

It is expected that all control rod drive mechanisms will meet specified operating requirements for the duration of plant life with normal refurbishment. However, a Technical Specification pertaining to an inoperable rod cluster control assembly has been set.

In order to demonstrate proper operation of the control rod drive mechanism and to ensure acceptable core power distributions during operation partial rod cluster control assembly movement checks are performed on the rod cluster control assemblies during reactor critical operation. (Refer to Plant Technical Specifications). In addition, drop tests of the rod cluster control assemblies are performed after each refueling shutdown to demonstrate continued ability to meet trip time requirements.

To confirm the mechanical adequacy of the fuel assembly and rod cluster control assembly, functional test programs have been conducted on a full scale control rod. The prototype assembly was tested under simulated conditions of reactor temperature, pressure, and flow for approximately 1000 hours. The prototype mechanism accumulated about 3,000,000 steps and 600 trips. At the end of the test the control rod drive mechanism was still operating satisfactorily.

Actual experience on the Ginna, Mihama No. 1, Point Beach No. 1 and H. B. Robinson plants indicates excellent performance of control rod drive mechanisms.

All units are production tested prior to shipment to confirm ability of control rod drive mechanisms to meet design specification-operational requirements.

4.2.3.5 Instrumentation Applications

Instrumentation for determining reactor coolant average temperature (T_{avg}) is provided to create demand signals for moving groups of rod cluster control assemblies to provide load follow (determined as a function of turbine impulse pressure) during normal operation and to counteract operational transients. The hot and cold leg resistance temperature detectors (RTD's) are described in Section 7.2. The location of the RTD's in each loop is shown on the flow diagrams in Chapter 5. The Reactor Control System which controls the reactor coolant average temperature by regulation of control rod bank position is described in Chapter 7.

Rod Position indication instrumentation is provided to sense the actual position of each drive rod assembly (i.e., control rod) so that the actual position of the individual rod may be displayed to the operator. Signals are also supplied by this system as input to the rod deviation comparator. The rod position indication system is described in Chapter 7.

The reactor makeup control system, whose functions are to permit adjustment of the reactor coolant boron concentration for reactivity control (as well to maintain the desired operating fluid inventory in the volume control tank), consists of a group of instruments arranged to provide a manually preselected makeup composition that is borated or diluted as required to the charging pump suction header or the volume control tank. This system, as well as other systems including boron sampling provisions that are part of the Chemical and Volume Control System, are described in Section 9.3.

4.2.4 References

1. J. A. Christensen, R. J. Allio and A. Biancheria, "Melting Point of Irradiated UO_2, " WCAO-6065, February, 1965.

2. "Operational Experience With Westinghouse Cores," WCAP-8183, (Latest Revision).

3. Egglestion, F. T., "Safety-Related Research and Development for Westinghouse Pressurized Water Reactor, Program Summaries-Winter 1976- Summer 1978," WCAP-8768, Revision 2, October 1977.

4. J. M. Hellman (Ed)., "Fuel Densification Experimental Results and Model for Reactor Operation," WCAP-8219-A, March 1975.

5. Miller, J. V., (Ed.), "Improved Analytical Models Used in Westinghouse Fuel Rod Design Computations, " WCAP-8720 (Proprietary) and WCAP-8785 (Non-Proprietary), October 1976.

6. Weiner, R. A., et al, "Improved Fuel Performance Models for Westinghouse Fuel Rod Designs and Safety Evaluation," WCAP-10851-P-A (Proprietary) and WCAP-11873-A (Non-proprietary), August 1988.

7. B. Watkins and D. S. Wood, "The Significance of Irradiation-Induced Creep on Reactor Performance of a Zircaloy-2 Pressure Tube,"Applications-Related Phenomena for Zirconium and its Alloys, ASTM STP 458. American Society for Testing and Materials, 1969, pp 226-240.

8. W. J. O'Donnell, B. F. Langer, Fatigue Design Basis for Zircaloy Components, Nuclear Science and Engineering, 20, 1-12, 1964.

9. L. Gesinski, D Chaing, S. Nakazato, "Safety Analysis of the 17 x 17 Fuel Assembly for Combined Seismic and Loss-of-Coolant Accident," WCAP-8288, December 1973.

10. E. E. DeMario, S. Nakazato, "Hydraulic Flow Test of the 17 x 17 Fuel Assembly," WCAP-8278, February 1974.

11. J. S. Moore, "Nuclear Fuel Division Quality Assurance Program Plan," WCAP-7800, Revision 5A, November, 1979.

12. J. Cohen, "Development and Properties of Silver Base Alloys as Control Rod Materials for Pressurized Water Reactors," WAPD-214, December 1959.

13. L. Gesinski, et. al., "Safety Analysis of the 17 x 17 Fuel Assembly for Combined Seismic and Loss-of-Coolant Accident," WCAP-8288, Addendum 1, April 1974.

14. Risher, D. H. (Ed.) "Safety Analysis for the Revised Fuel Rod Internal Pressure Design Basis," WCAP-8963, Nov. 1976 (Proprietary) and WCAP-8964, Aug. 1977 (Non-Proprietary).

15. R. A. George, Y. C. Lee, G. H. Eng. "Revised Clad Flattening Model," WCAP-8377 (Westinghouse Proprietary) and WCAP-8381 (Non-Proprietary), July 1974.

16. Skaritka, J., et al, "Westinghouse Wet Annular Burnable Absorber Evaluation Report," WCAP-10021-NP-A, Revision 1 (Non-Proprietary), October 1983.

17. U. S. NRC. "Initial Test Programs for Water-Cooled Nuclear Power Plants," Reg. Guide 1.68 Rev. 2, August 1978.

18. Davidson, S. L. (Ed.), et al, "Extended Burnup Evaluation of Westinghouse Fuel," WCAP-10125-P-A (Proprietary) and WCAP-10126-A (Non-Proprietary), December 1985.

19. Davidson, S. L. (Ed.), et al, "VANTAGE 5H Fuel Assembly," WCAP-10444-P-A, Addendum 2A (Proprietary), April 1988.

20. Davidson, S. L. (Ed.), et at, "Referenced Core Report - VANTAGE 5 Fuel Assembly," WCAP-10444-P-A, September 1985.

21. Memo from N. E. Campbell to J. D. Robertson, "Tennessee Valley Authority, Sequoyah Nuclear Power Plant, Westinghouse Enhanced Performance RCCA's," May 24, 1989, RIMS L30 890526 800.

22. Westinghouse letter from N. R. Metcalf to T. A. Keys, "Tennessee Valley Authority Sequoyah And Watts Bar Nuclear Power Plants Secondary Source Performance Evaluation And Double Encapsulated Secondary Sources," October 23, 1991, 91TV*-G-0072, RIMS L38 911031 805.

23. Framatome Technologies Document 51-5009976-00, ”FCF 17x17 RCCA Equivalency Evaluation/Drop Time Analysis,” dated October 2000.

24. Framatome Technologies Document 51-5012480-00, ”Safety Evaluation of MK-BW 17x17 RCCA for Sequoyah,” dated June 2001.

25. Framatome Technologies Document 51-5012505-00, ”MK-BW/Westinghouse 17x17 RCCA Comparison for Sequoyah,” dated April 2001.

TABLE 4.2.2-1

MAXIMUM DEFLECTIONS ALLOWED FOR REACTOR INTERNAL SUPPORT STRUCTURES

Component	Allowable Deflections (in)	No-Loss-of Function Deflections (in)
Upper Barrel		
radial inward	4.1	8.2
radial outward	1.0	1.0
Upper Package	0.10	0.15
Rod Cluster Guide Tubes	1.00	1.75

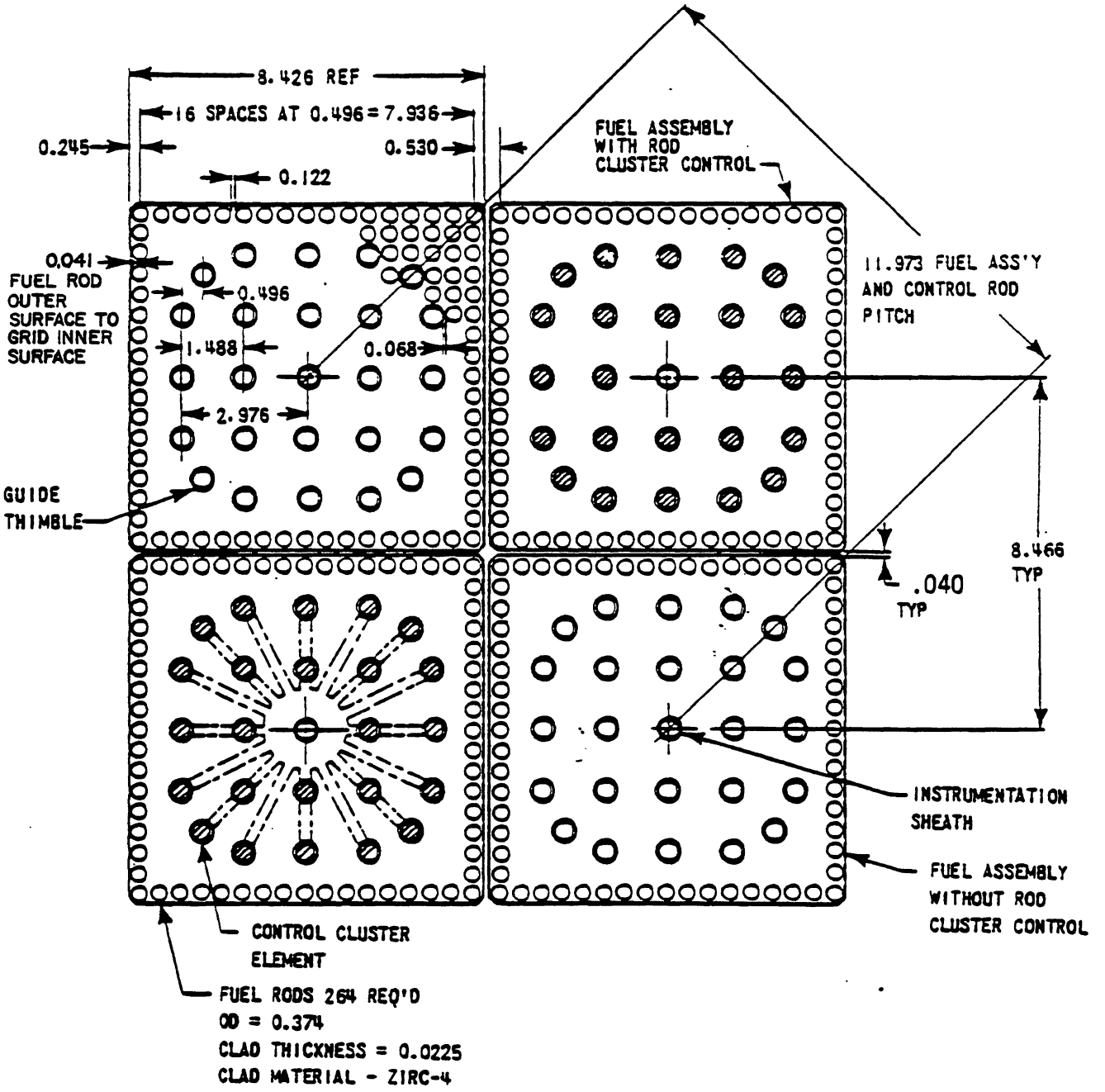

Figure 4.2.1-1 Fuel Assembly Cross Section 17 x 17

REVISED BY AMENDMENT 6.

Best Available Historical Image

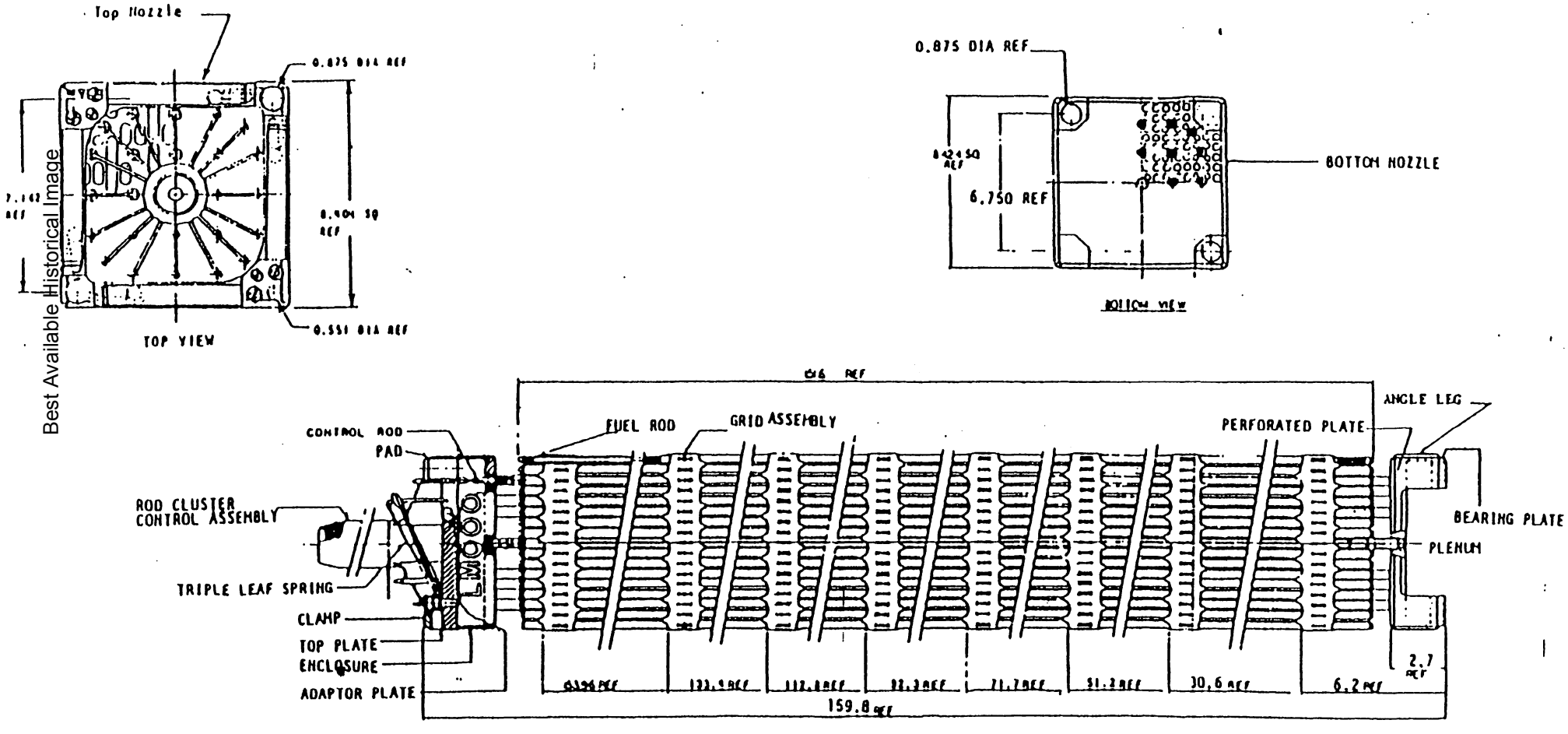

FIGURE 4.2.1-2 FUEL ASSEMBLY OUTLINE 17 X 17 - STD

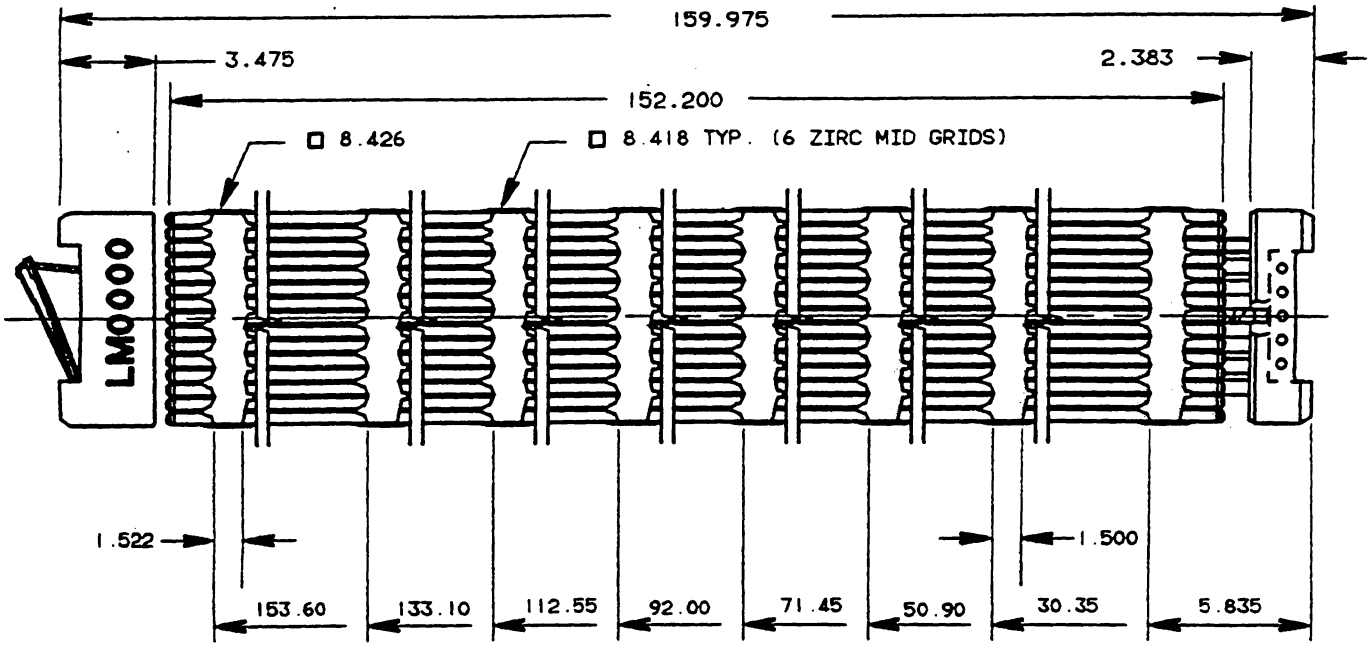

17X17 VANTAGE 5H FUEL ASSEMBLY

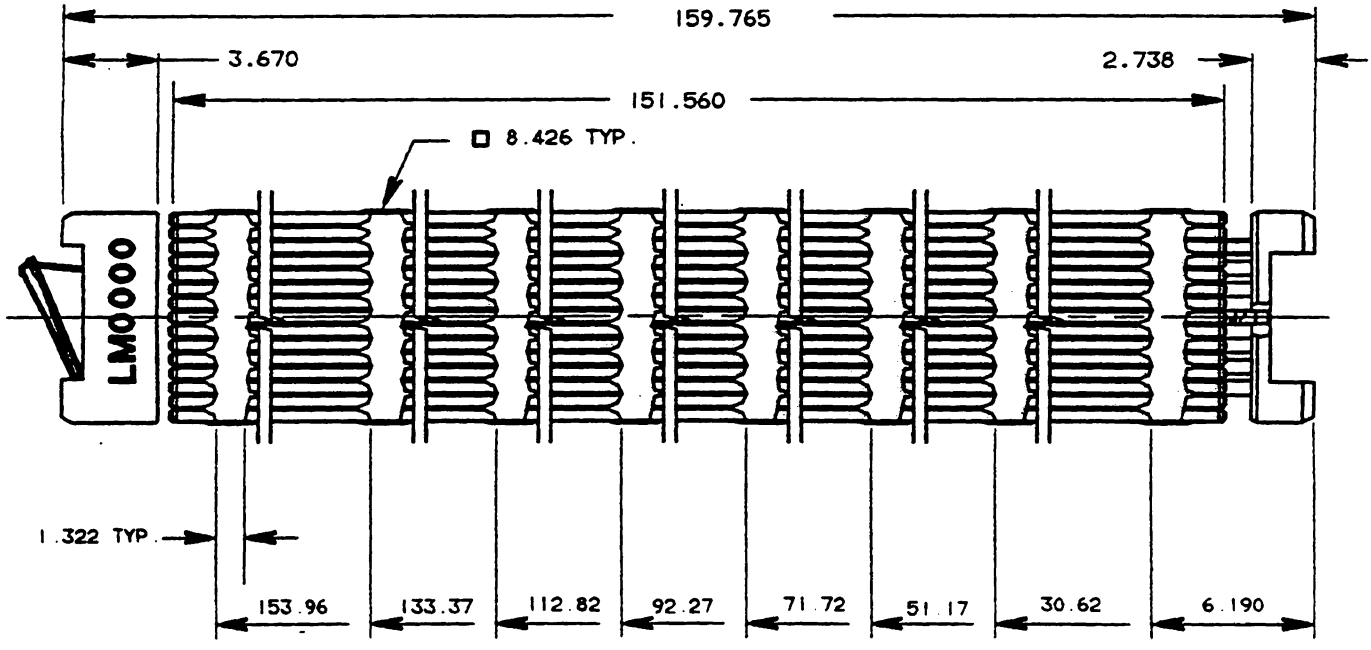

17X17 RECONSTITUTABLE STD FUEL ASSEMBLY

FIGURE 4.2.1-2A
VANTAGE 5H/STD ASSEMBLY COMPARISON

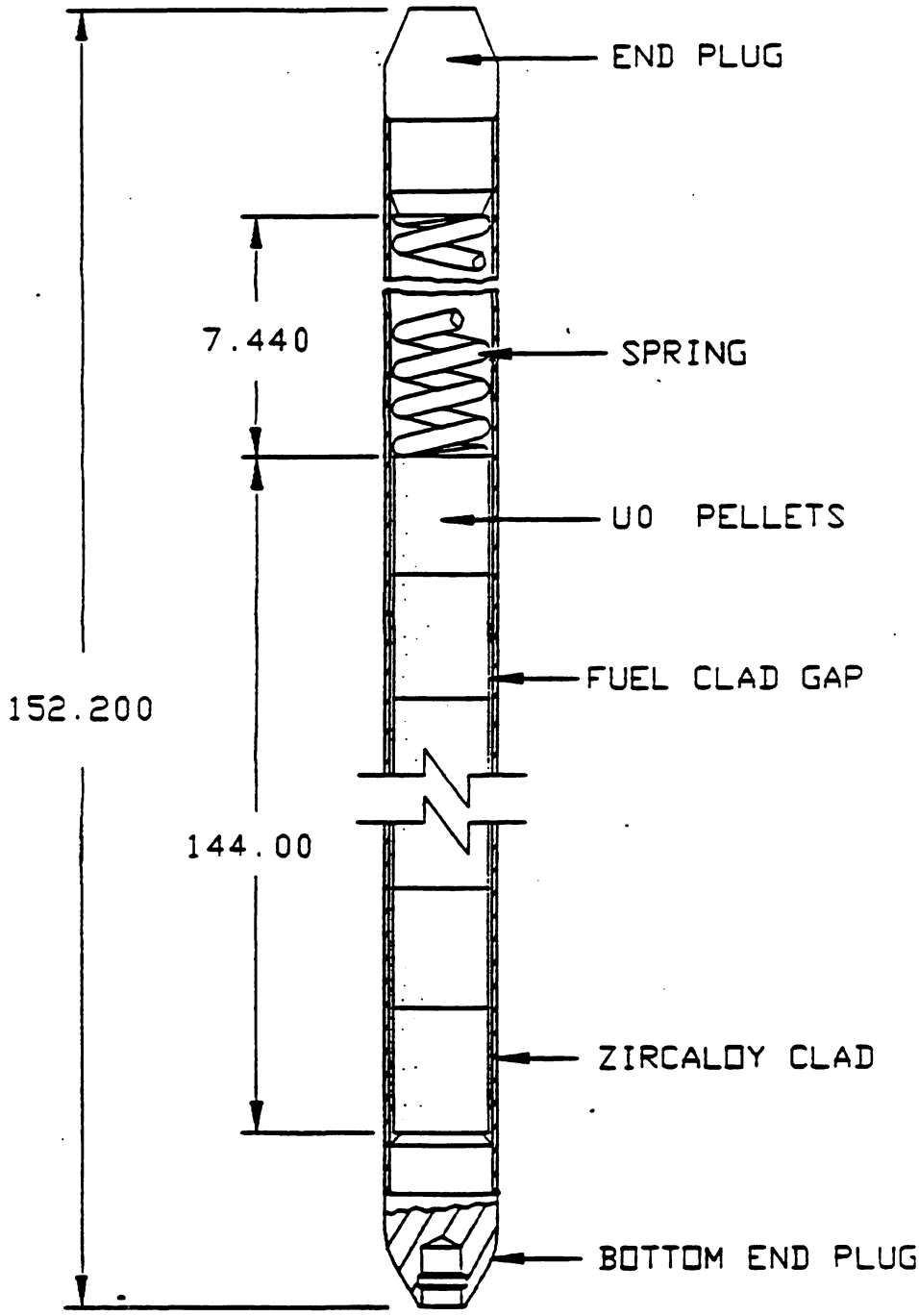

SPECIFIC DIMENSIONS DEPEND ON DESIGN VARIABLES SUCH AS PRE-PRESSURIZATION, POWER HISTORY, AND DISCHARGE BURNUP

Figure 4.2.1-3. Fuel Rod Schematic

FIGURE 4.2.1-3 NOTES

Figure 4.2.1-3 shows the plenum length in the fuel rod is 6.5" SQN unit 1 and SQN unit 2 initial cores have different nominal plenum lengths:

SQN unit 1 - 6.259" $^{+.320}_{-.295}$ *(Mfg. Drawing 271C628)*

SQN unit 2 - 6.479" $^{+.320}_{-.295}$ *(Mfg. Drawing 2650C01)*

SQN units 1 and 2 reload 1 fuel will have the 6.479" plenum length.

Remaining reload fuel for SQN units 1 and 2 will have the 6.900" plenum length, except for the V5H fuel which has the 7.44" plenum length.

DIM	17X17 V5H	17X17 STD
A	152.200	151.560
B	7.440	6.900
C	144.00	144.00
DIA D	.329	.329
DIA E	.374	.374

DIMENSIONS ARE IN INCHES

BOTTOM END PLUG SHOWS INTERNAL GRIP TYPE FOR FUEL RODS.

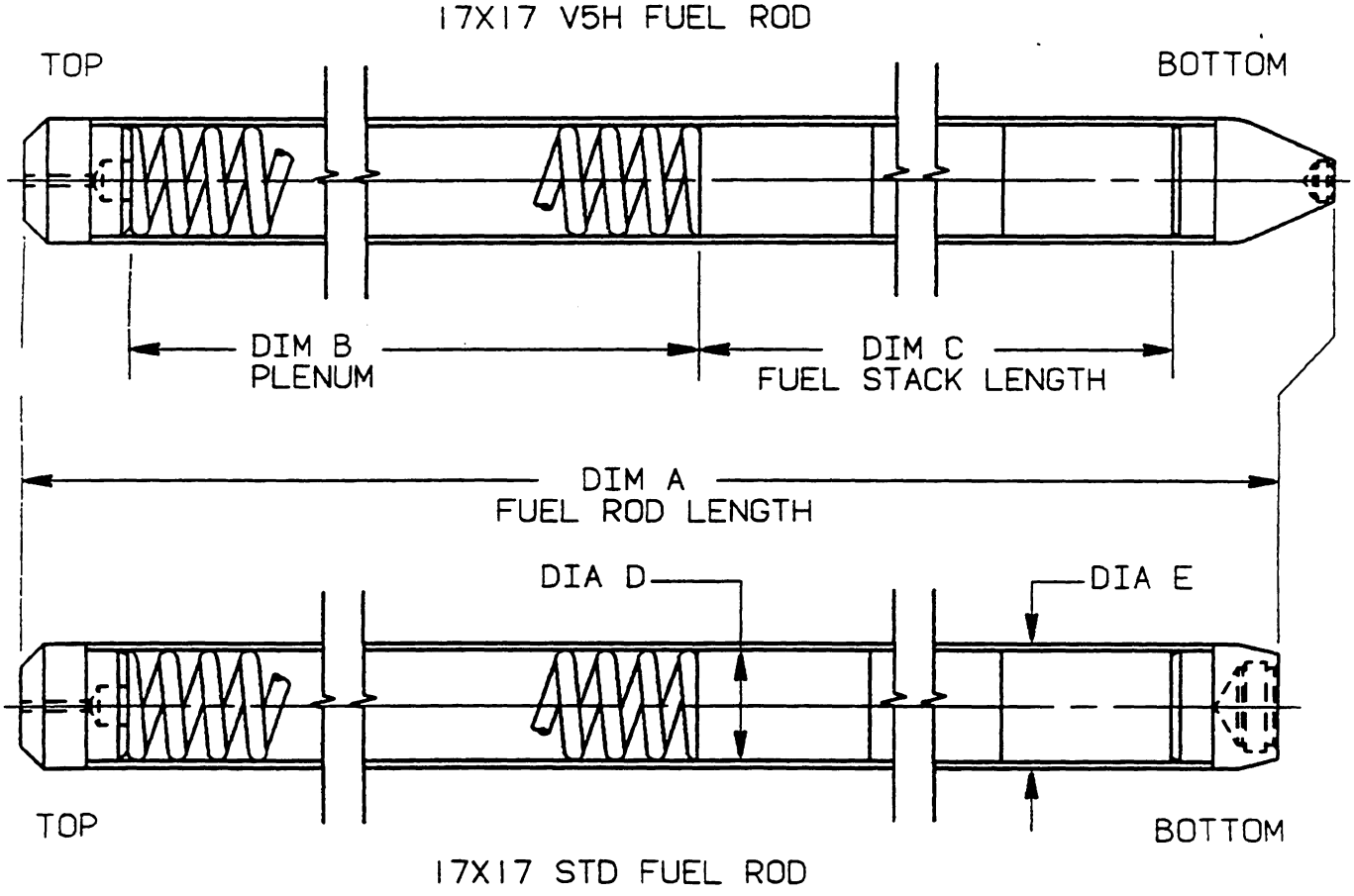

FIGURE 4.2.1-3A

VANTAGE 5H/STD FUEL ROD COMPARISON

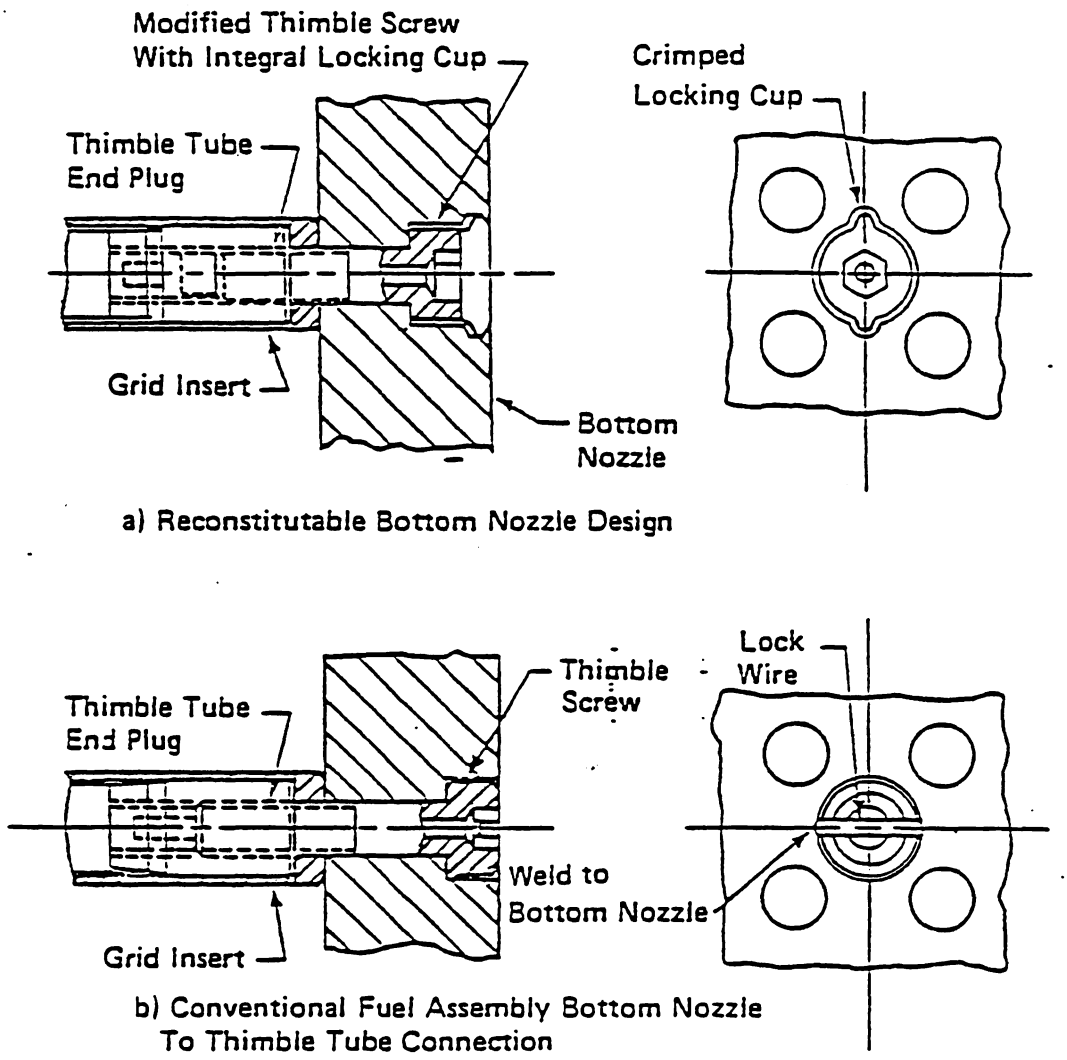

Figure 4.2.1-4 Comparison of Thimble Tube with Locking Screw Design

MID GRID EXPANSION JOINT DESIGN

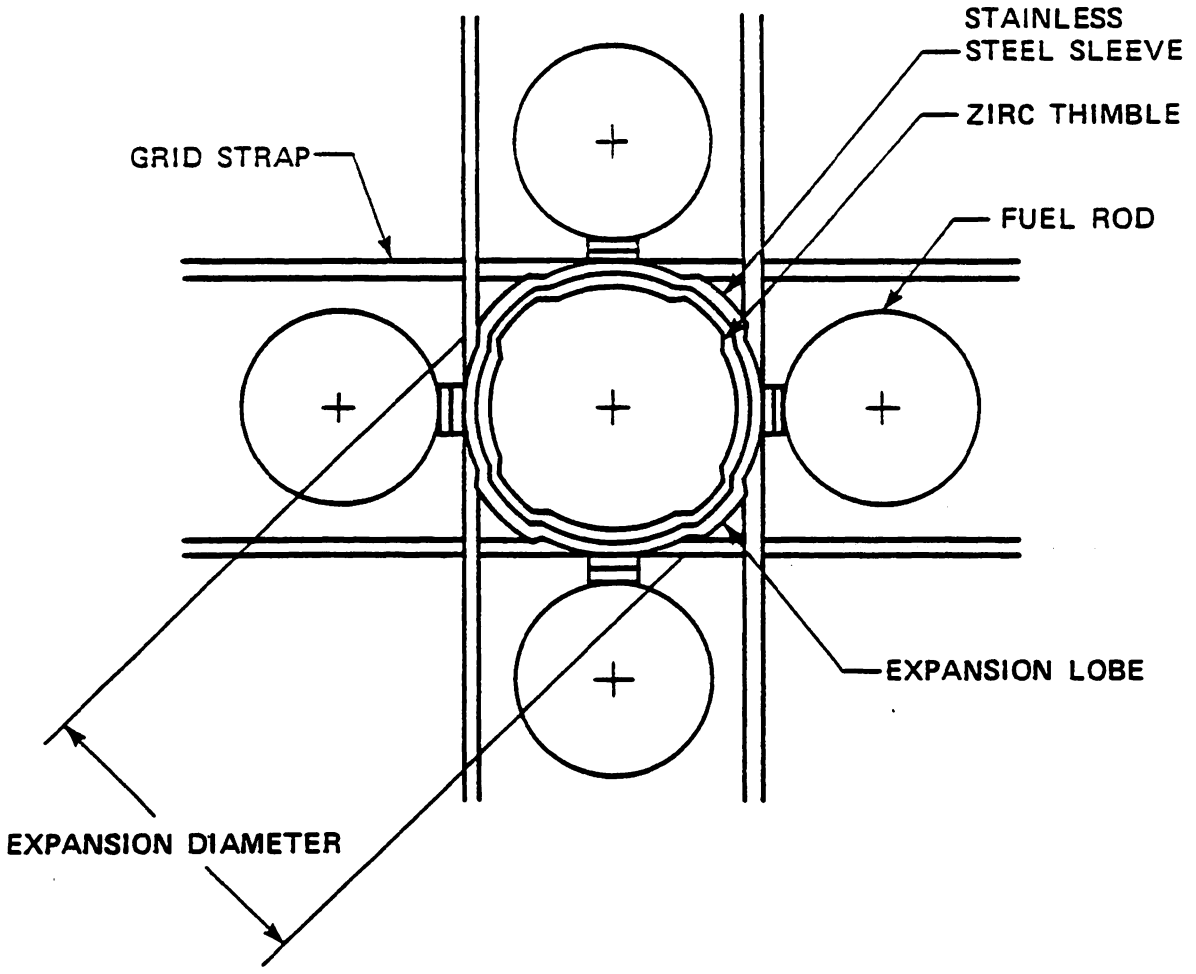

Figure 4.2.1- 5 Plan View

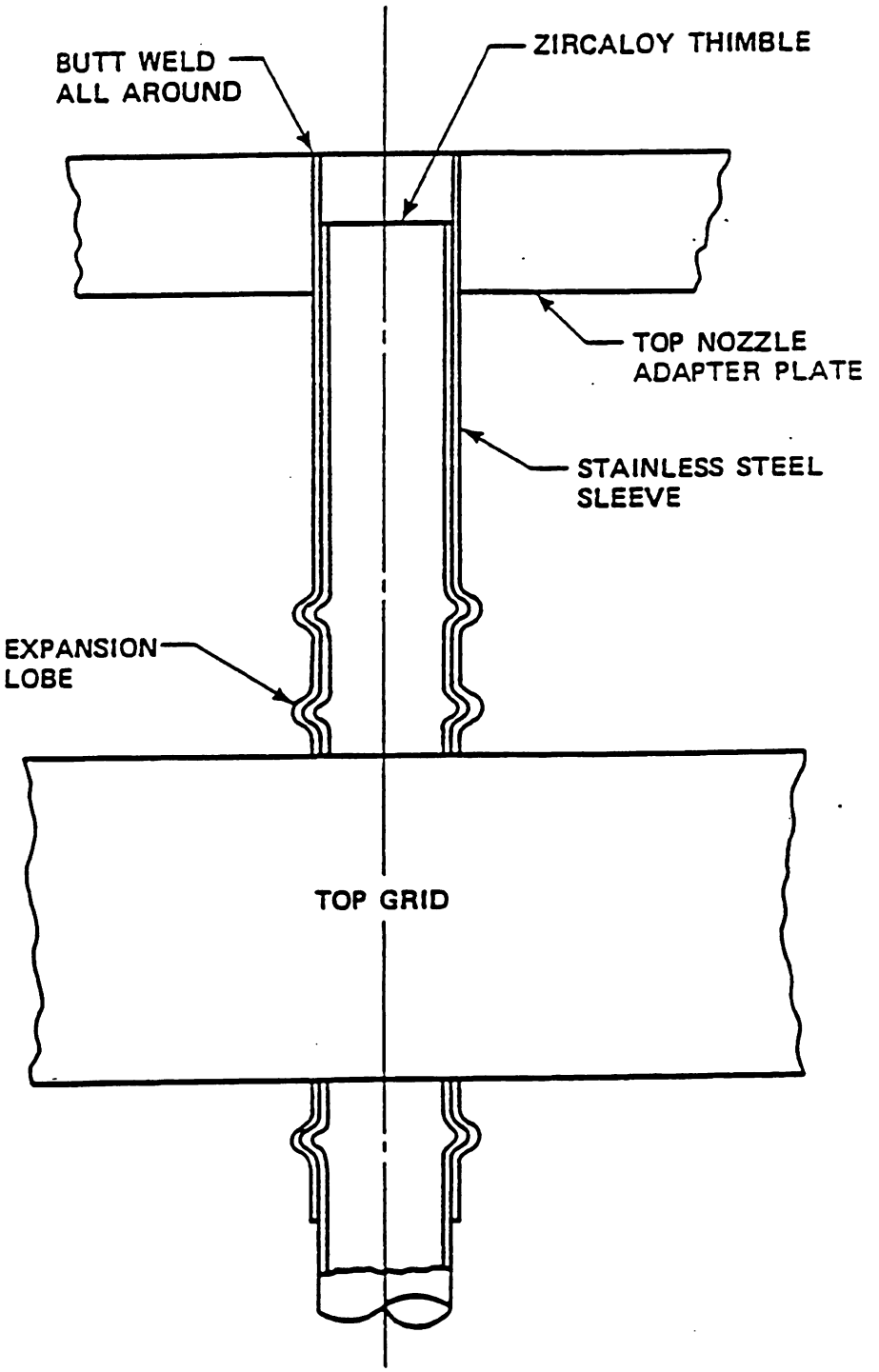

Figure 4.2.1-6a Top Grid to Nozzle Attachment

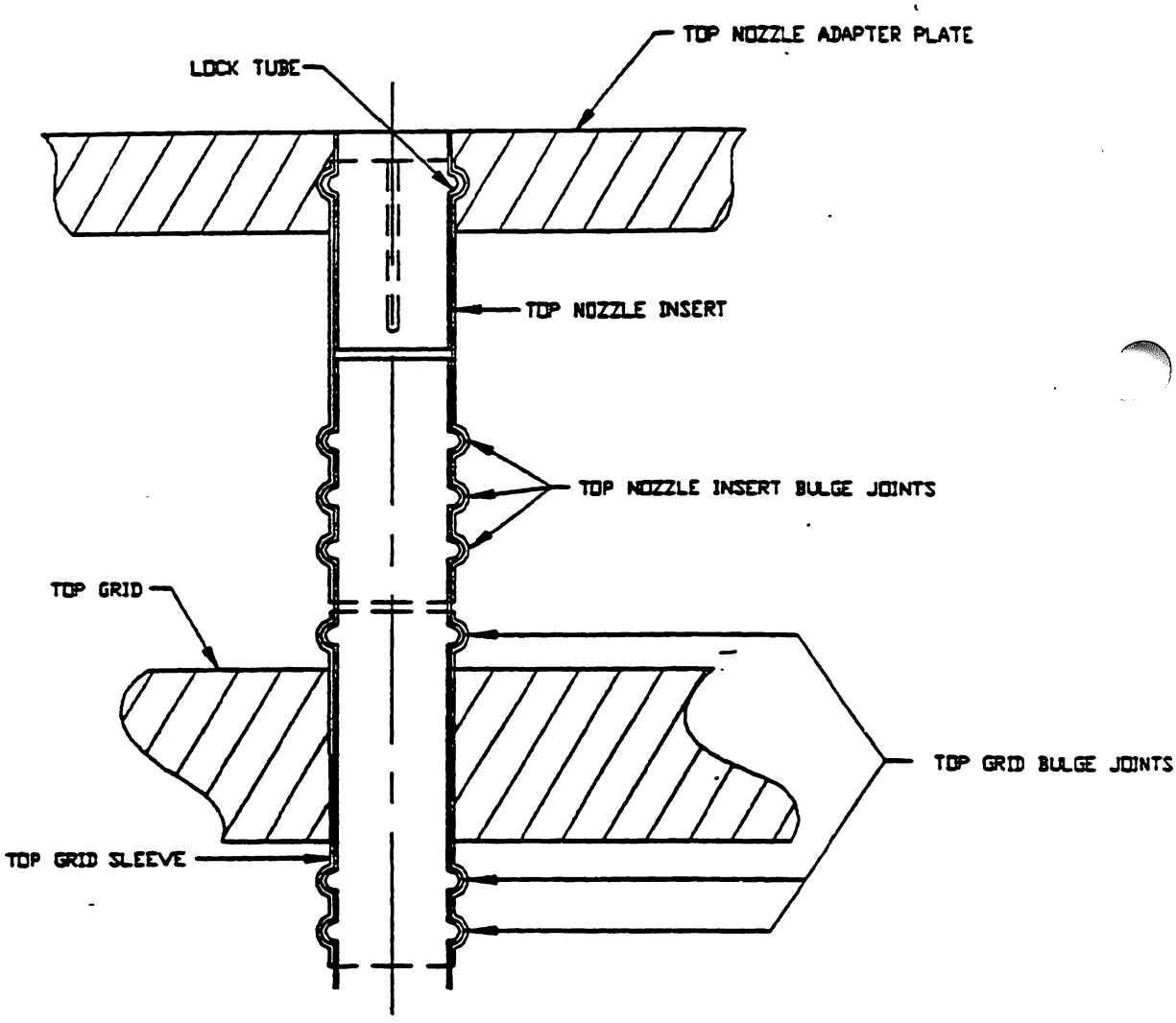

Figure 4.2.1-6b Top Grid to Nozzle Attachment

MID GRID EXPANSION JOINT DESIGN

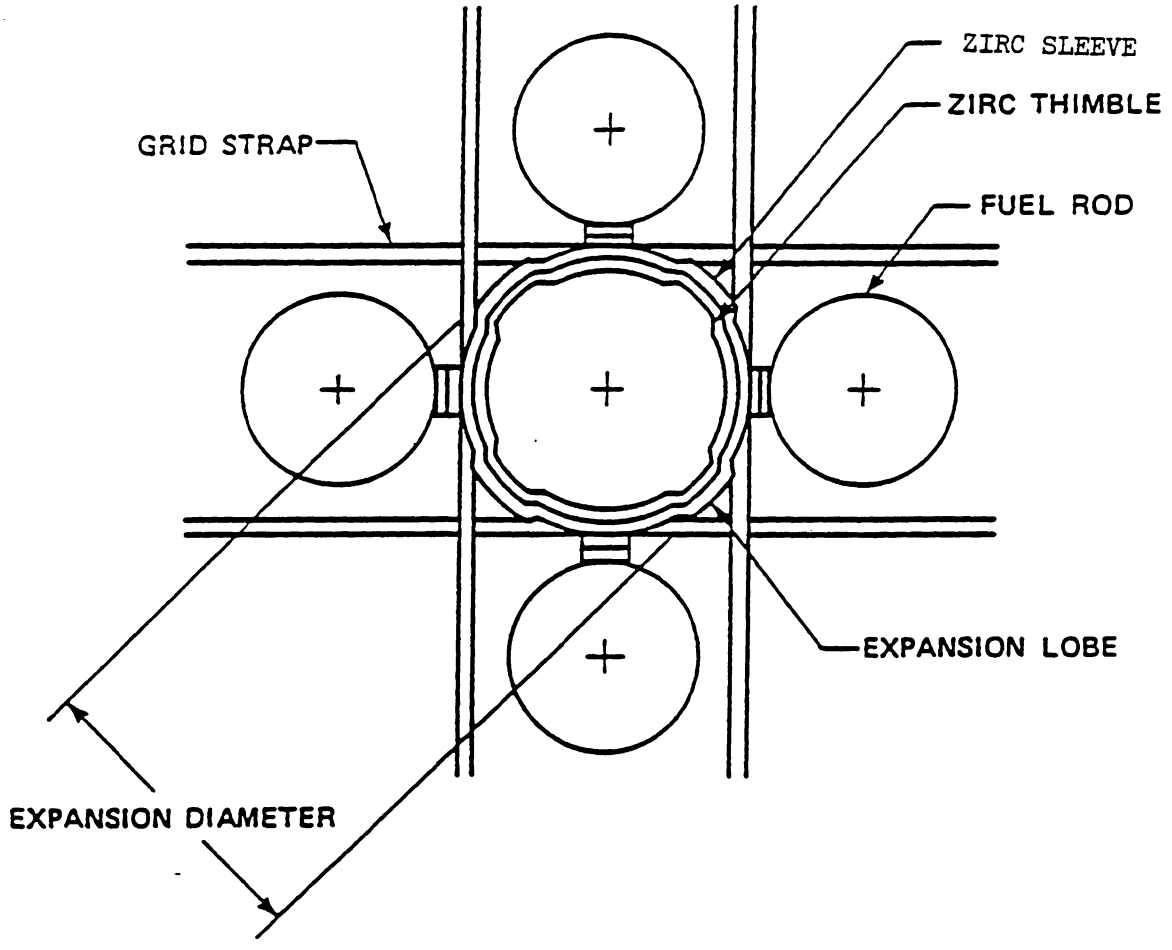

Figure 4.2.1- 7a Plan View of Mid Grid to Guide Thimble Joint - VANTAGE 5H

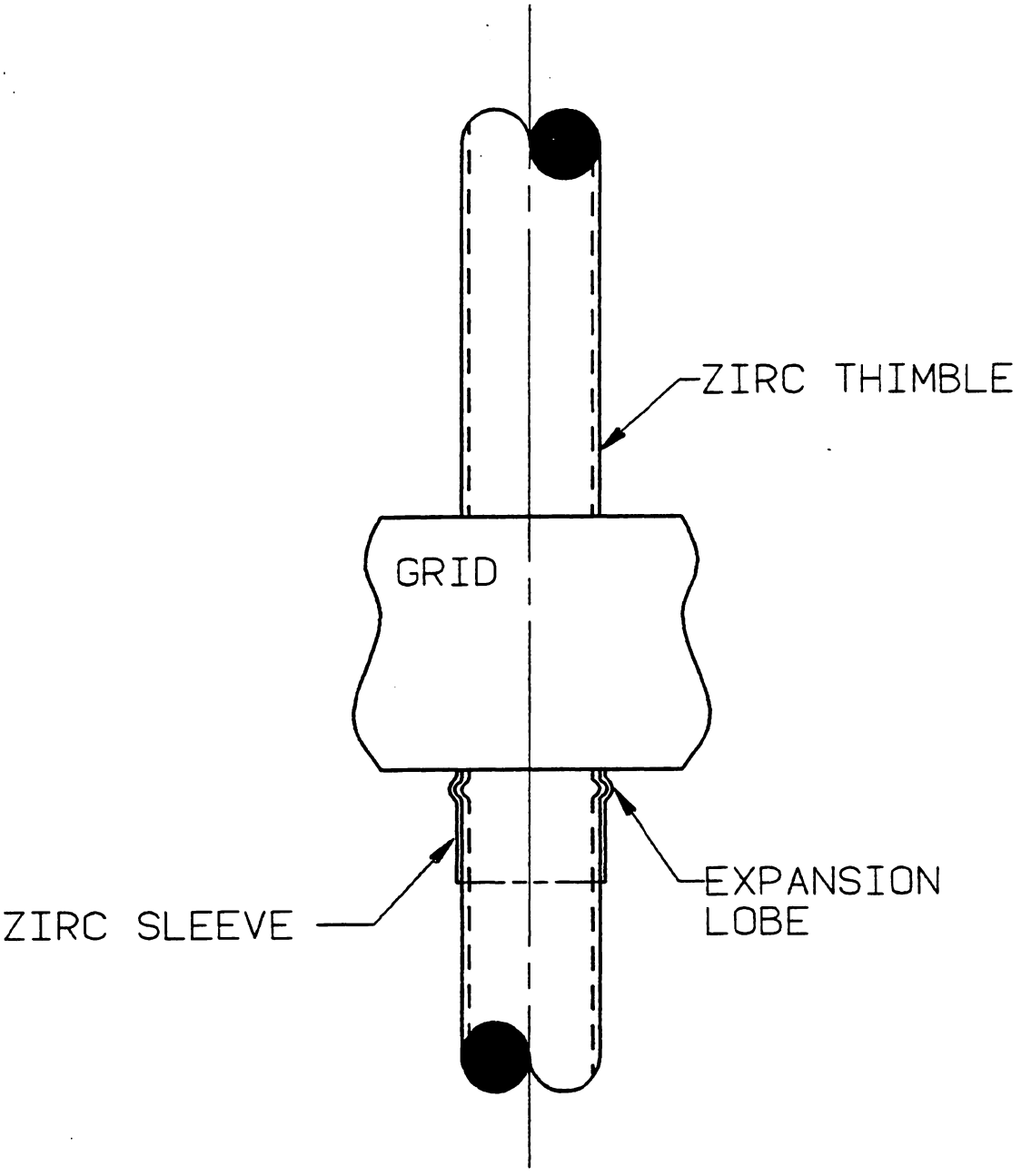

ELEVATION VIEW OF MID GRID
GUIDE THIMBLE JOINT-V5H

FIGURE 4.2.1-7B

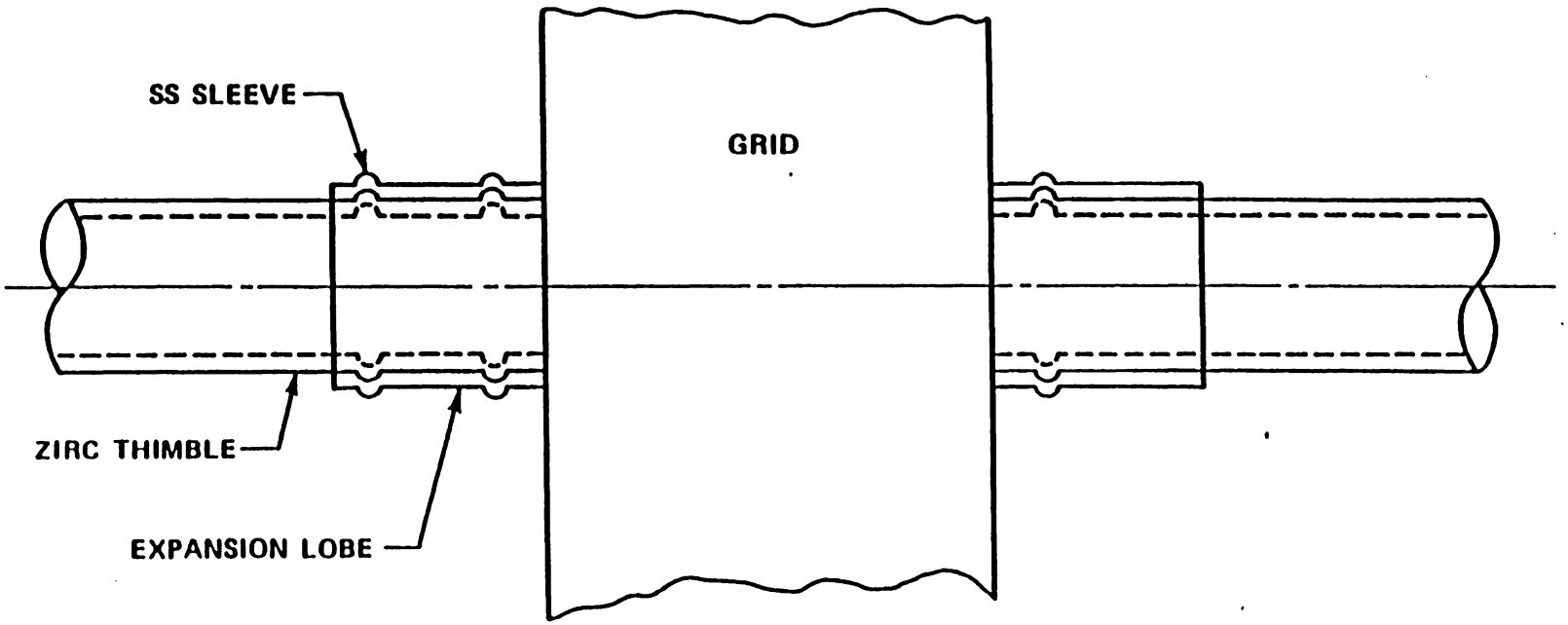

Figure 4.2.1-7c Elevation View, Grid to Thimble Attachment - STD

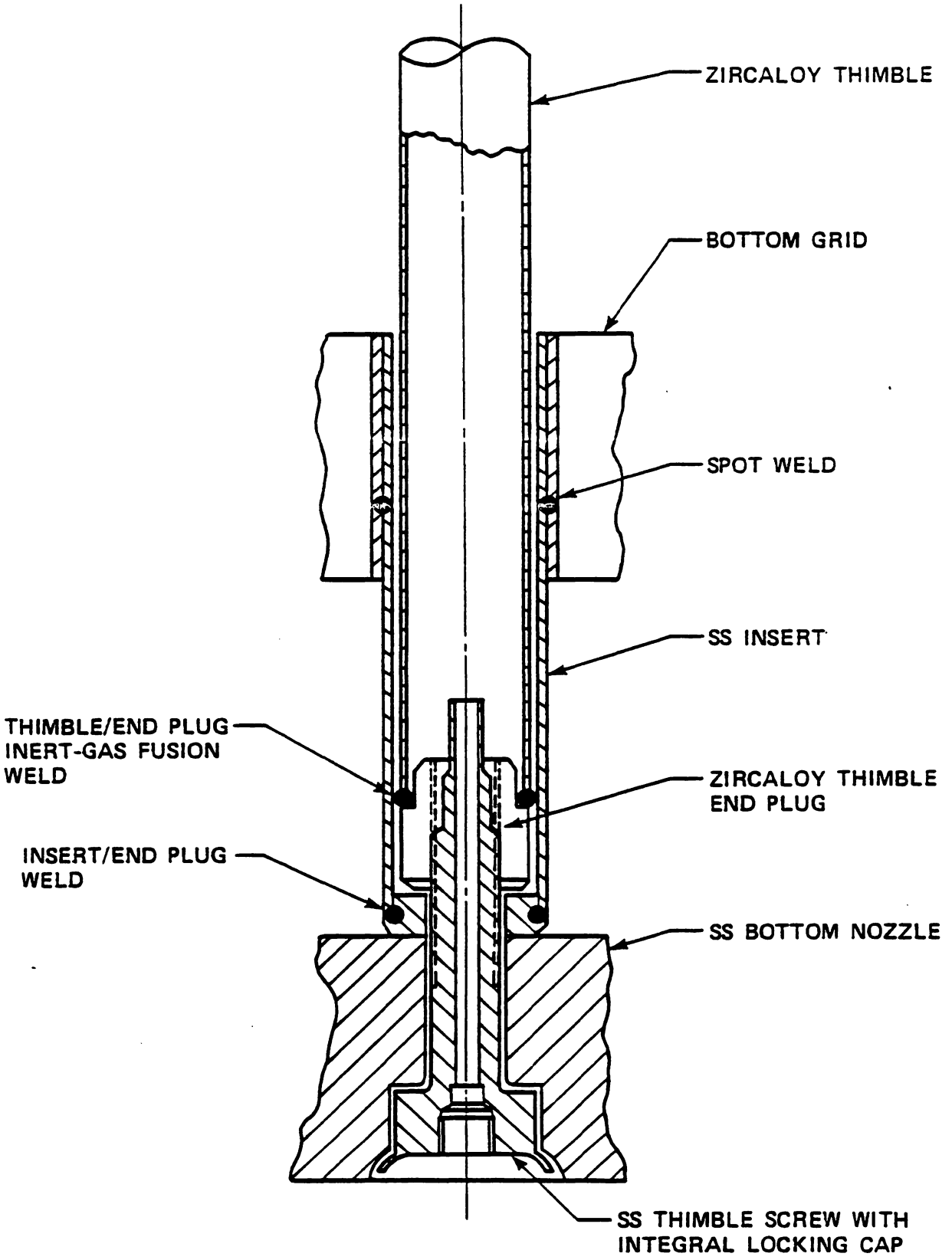

Figure 4.2.1- 8 Guide Thimble to Bottom Nozzle Joint

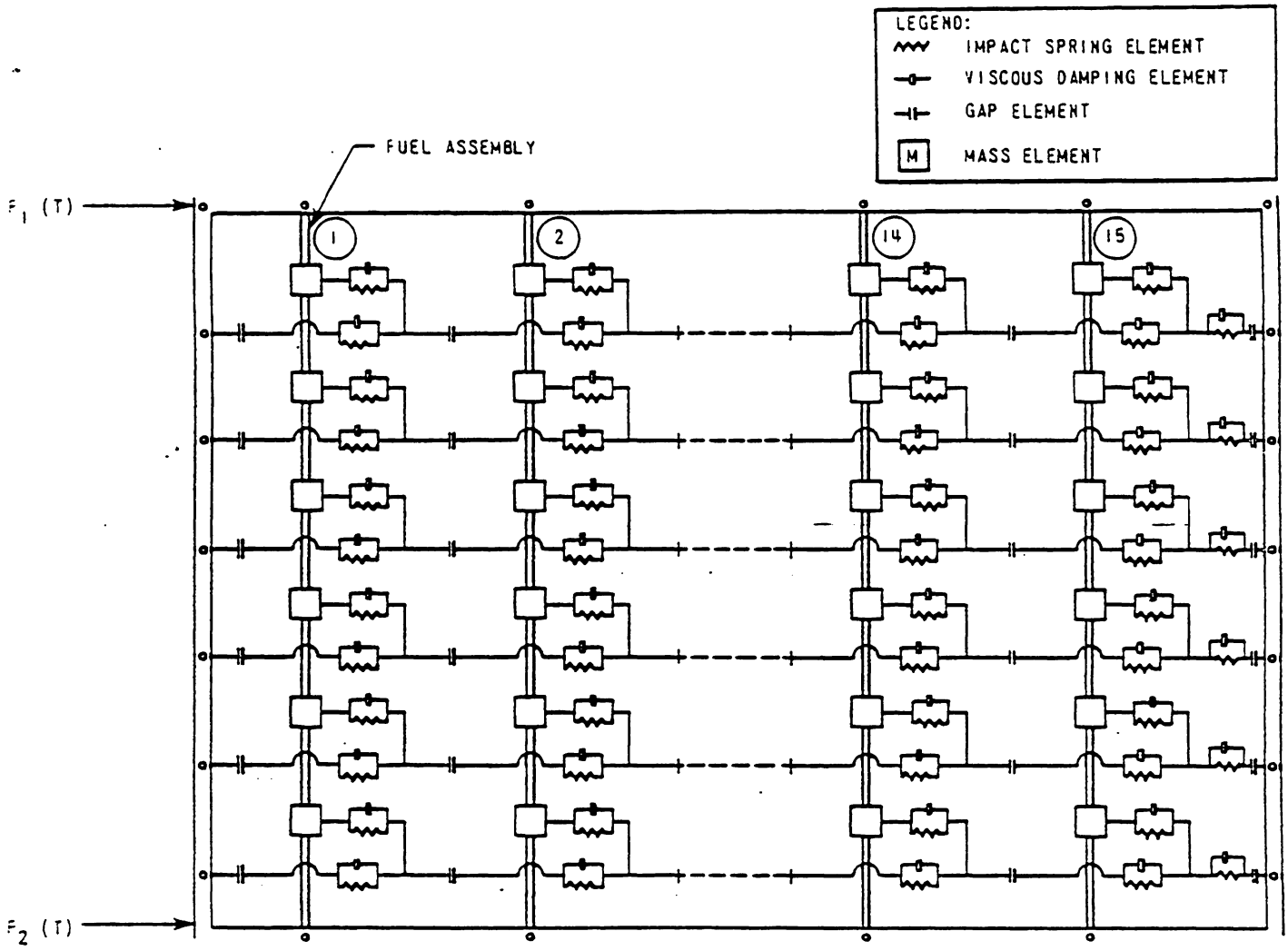

FIGURE 4.2.1-9 Schematic Representation Of Reactor Core Model

Revised by Amendment 13

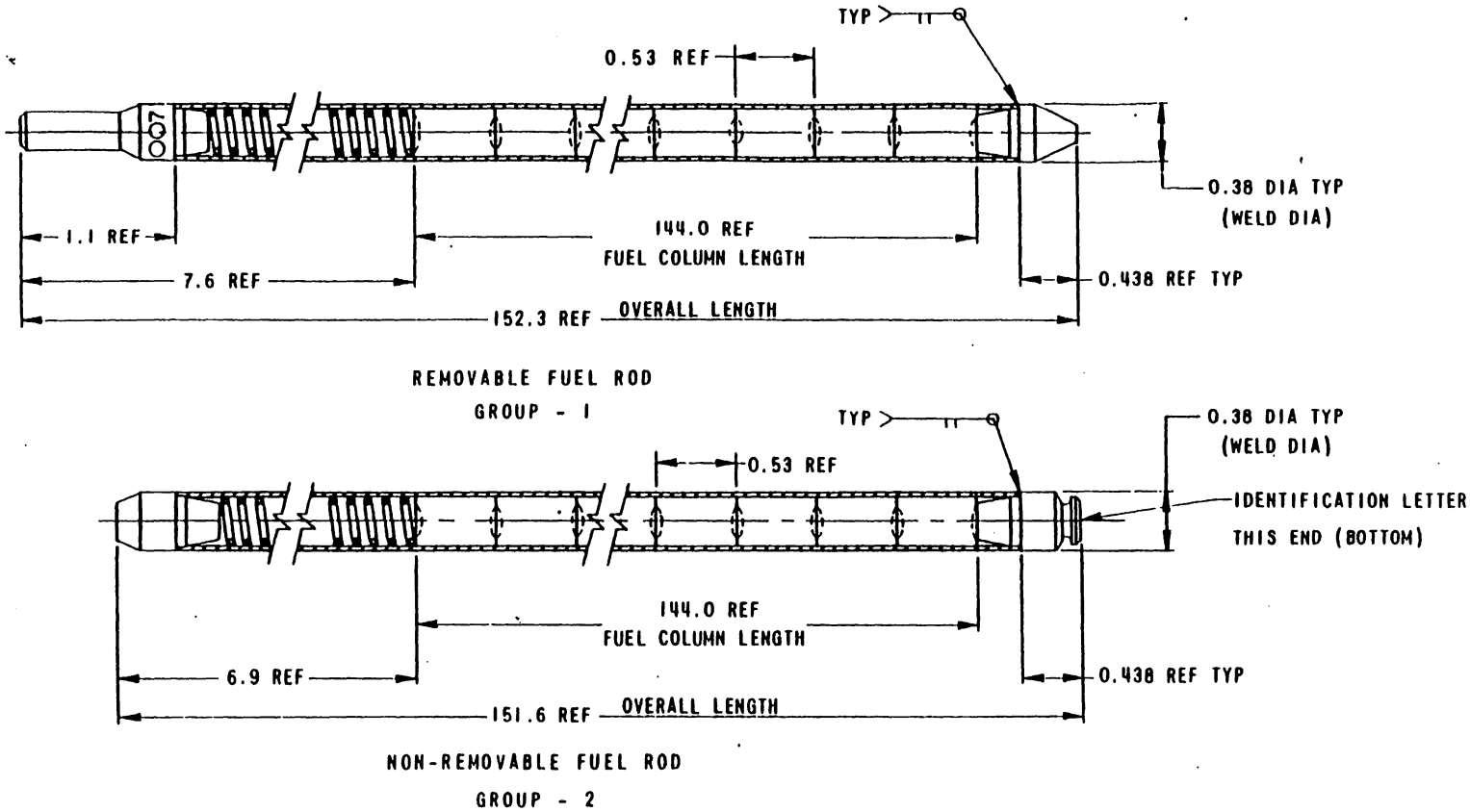

FIGURE 4.2.1-10 Removable Rod Compared to Standard Rod

Revised by Amendment 13

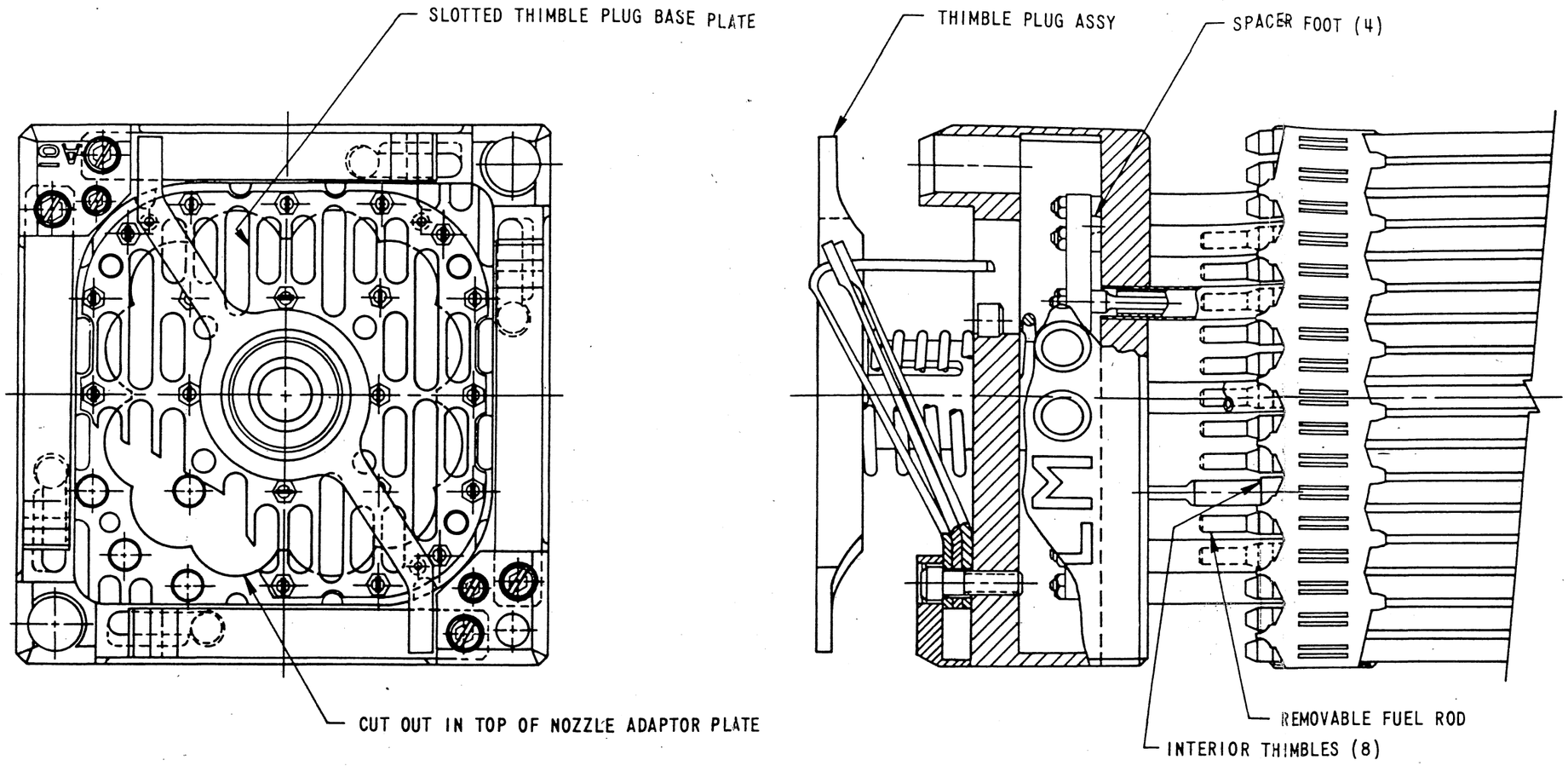

SEQUOYAH NUCLEAR PLANT
FINAL SAFETY
ANALYSIS REPORT

Removable Fuel Rod
Assembly Outline
(Conceptual)

FIGURE 4.2.1-11

Revised by Amendment 13

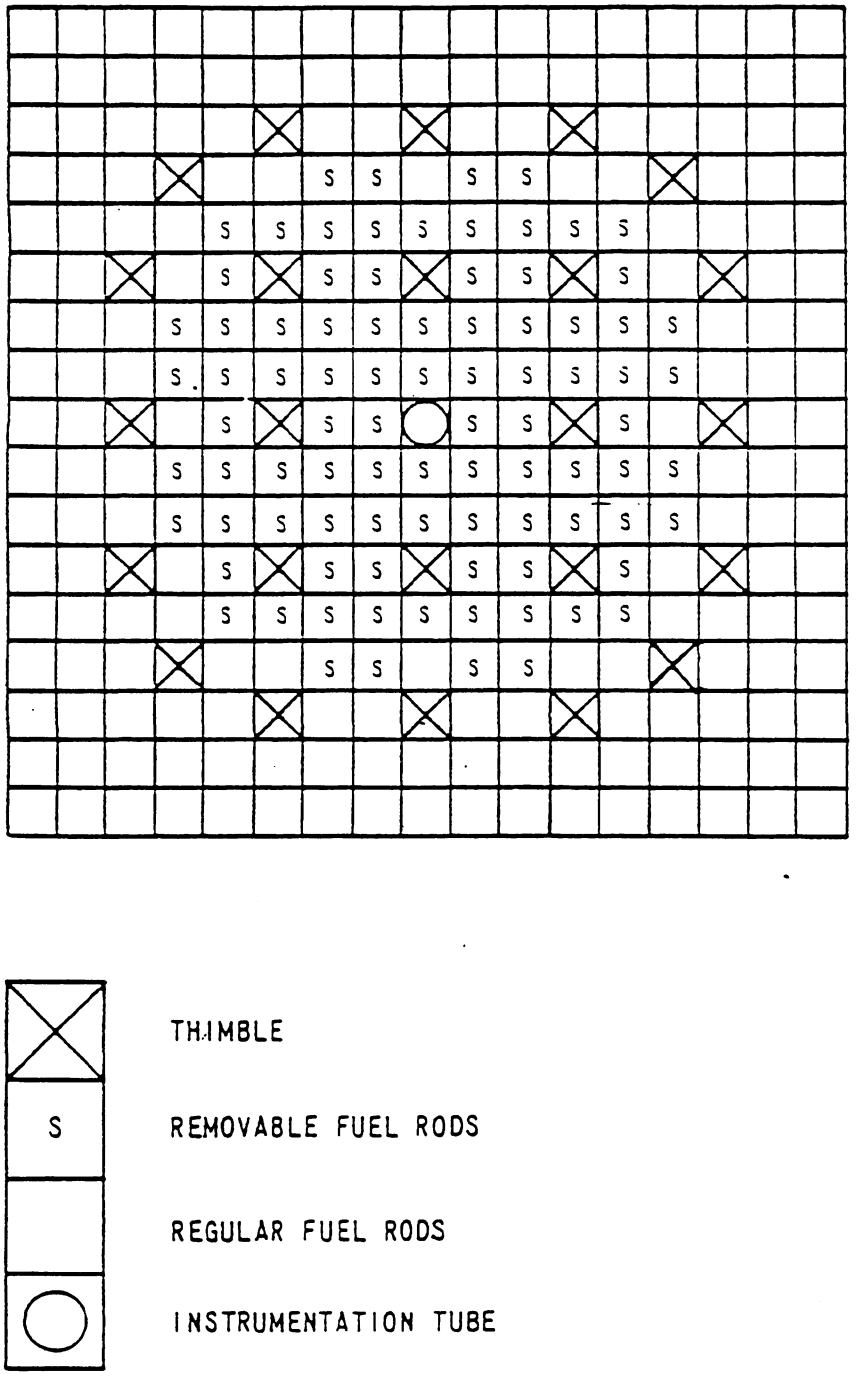

FIGURE 4.2.1-12 Location of Removable Rods Within an Assembly

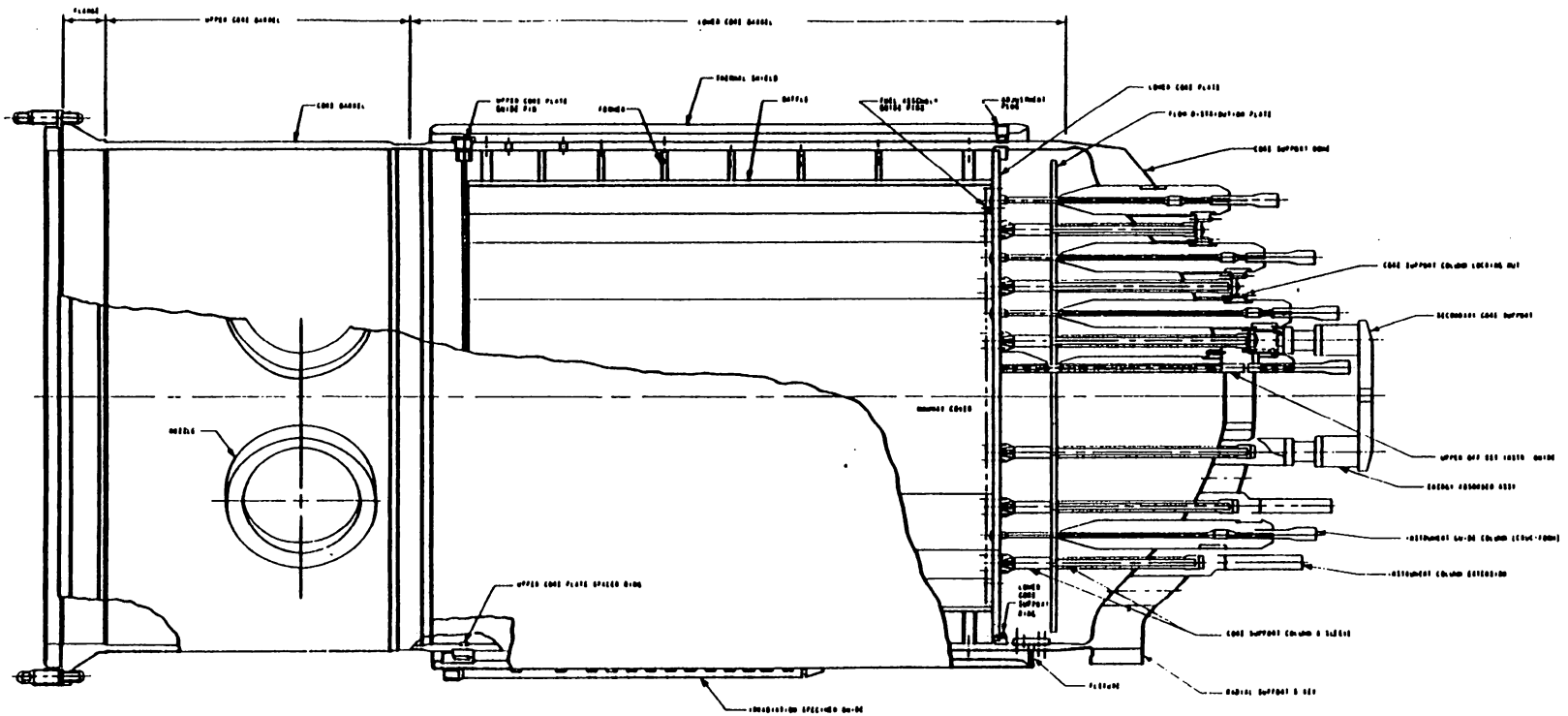

Figure 4.2.2-1 Lower Core Support Structure
(Core Barrel Assembly)

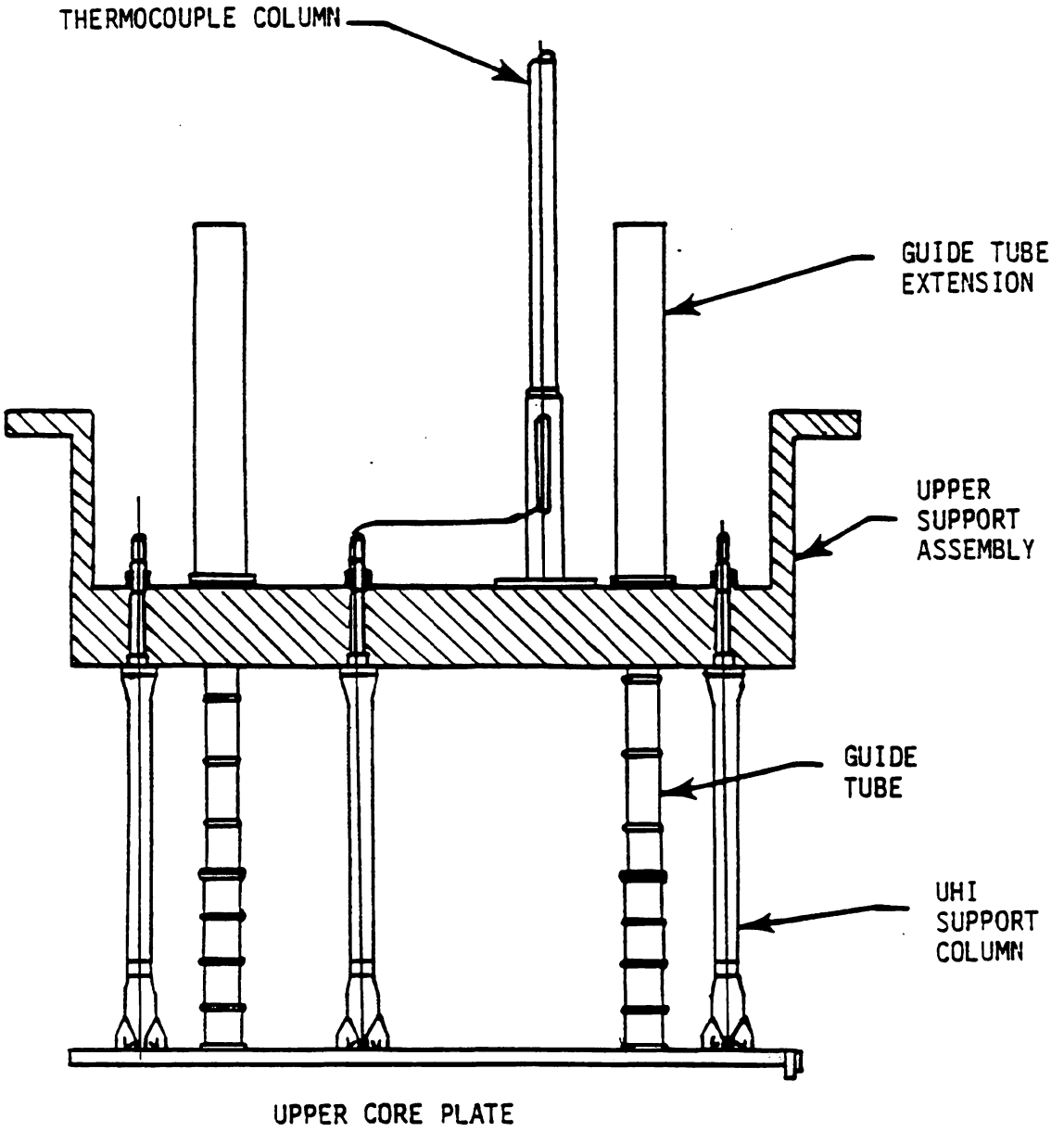

Figure 4.2.2-2 Upper Core Support Structure

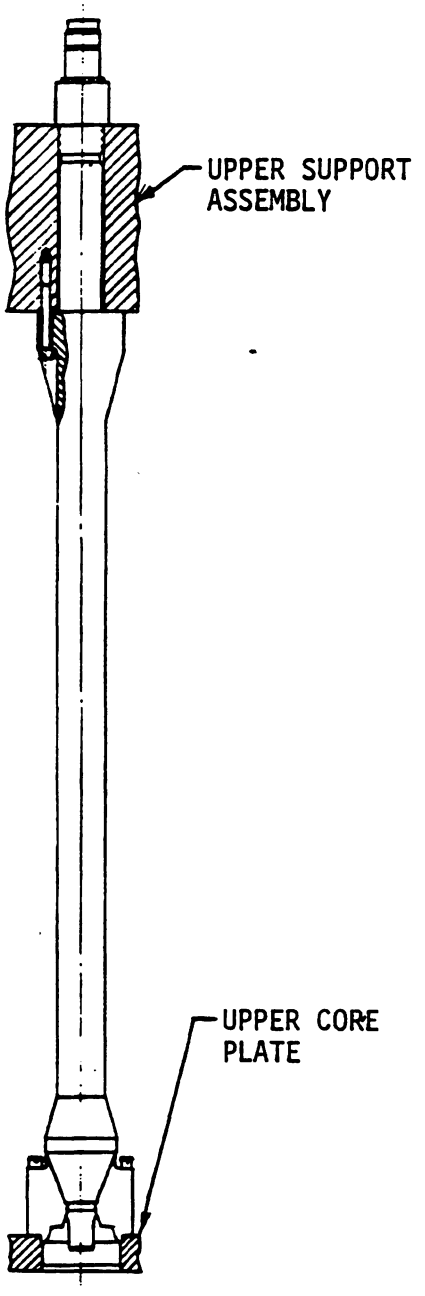

Figure 4.2.2-3 UHI Support Column

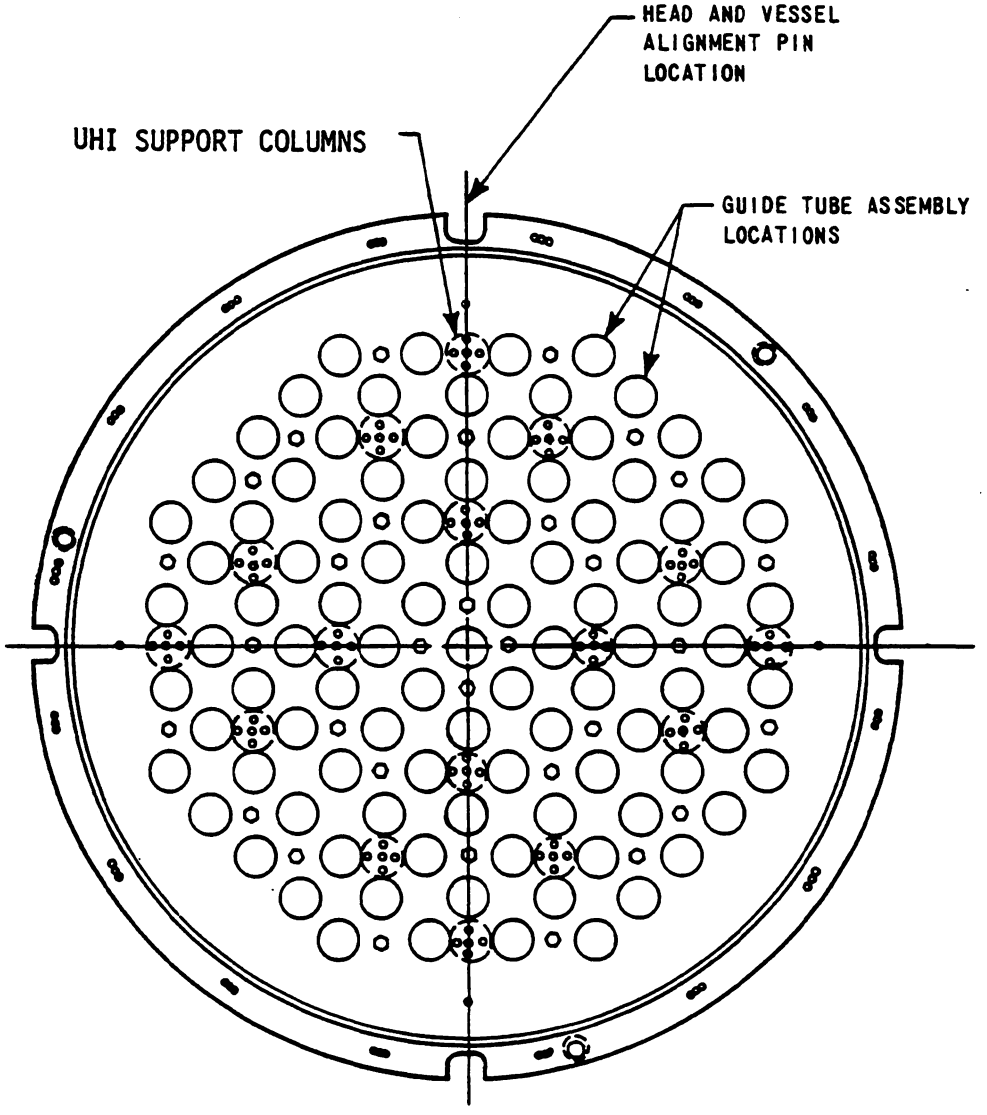

Figure 4.2.2-4 Plan View of Upper Core Support Structure

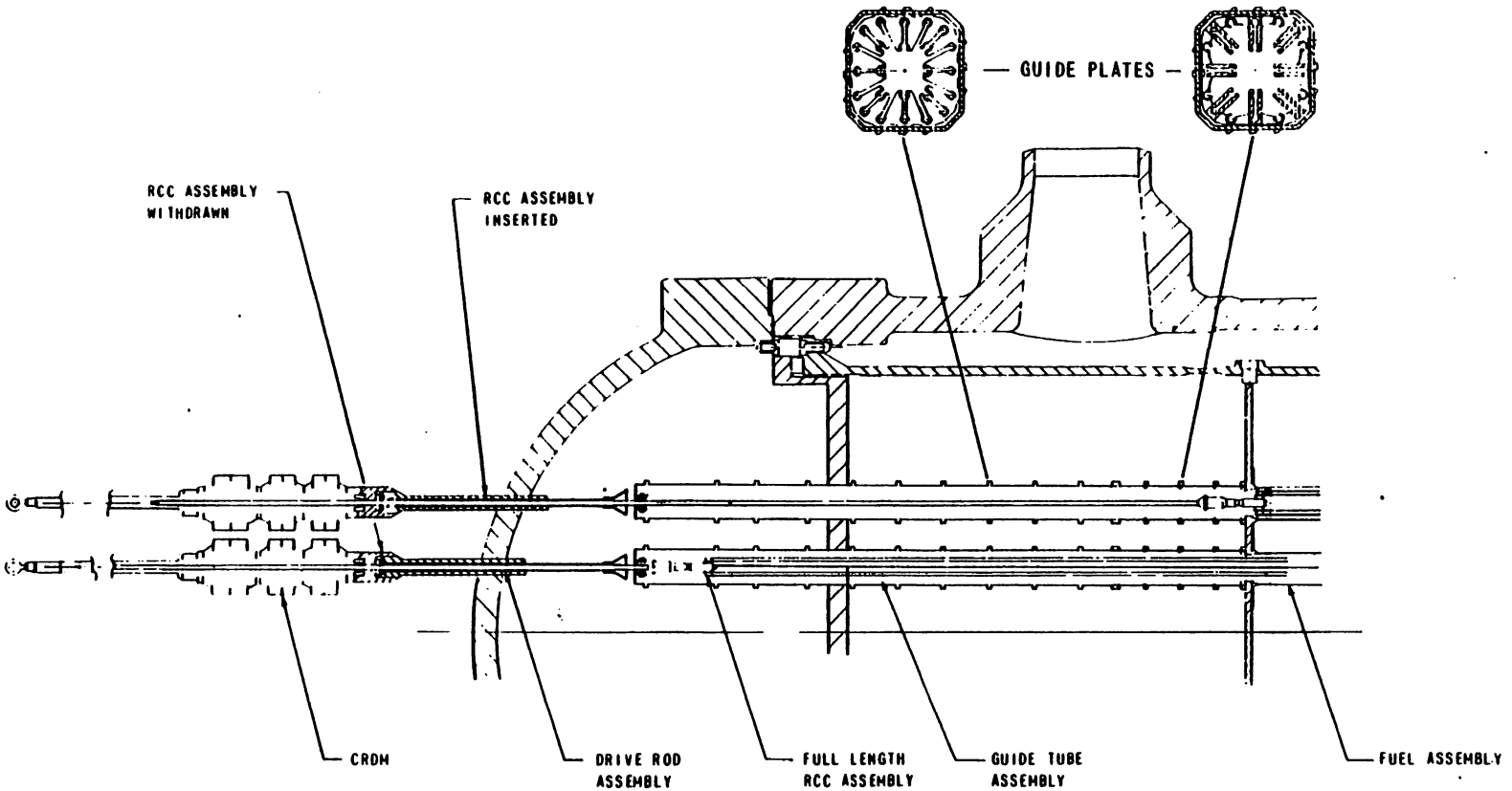

Figure 4.2.2-5 Rod Cluster Control Assembly and Drive Rod Assembly with Interfacing Components

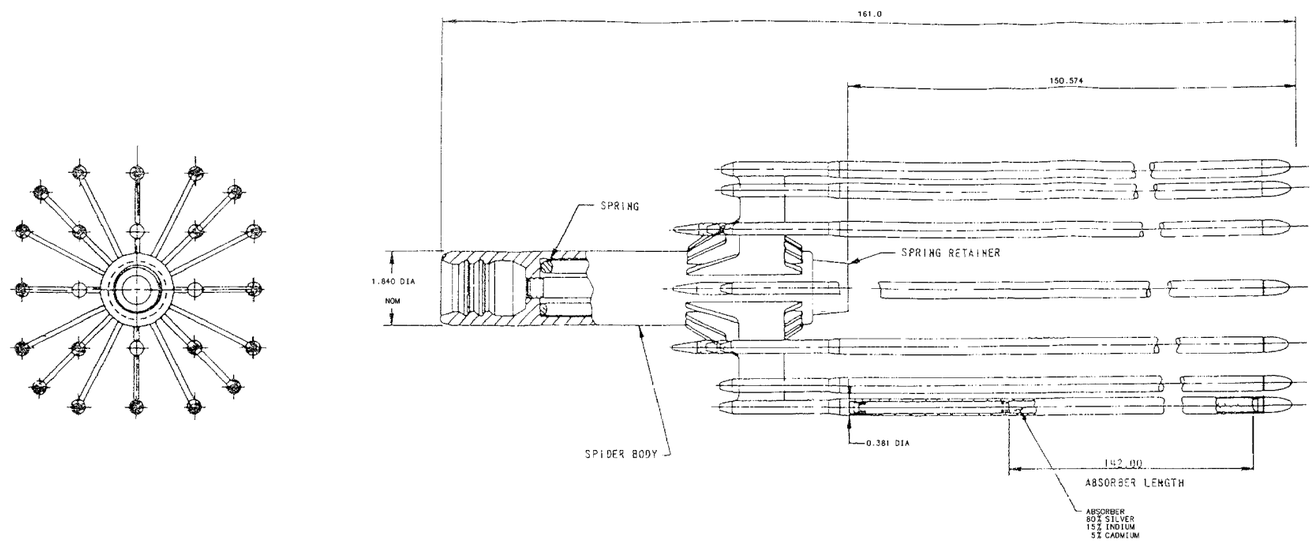

SEQUOYAH NUCLEAR PLANT
FINAL SAFETY
ANALYSIS REPORT

FIGURE 4.2.3-1
TYPICAL ROD CLUSTER
CONTROL ASSEMBLY OUTLINE
(REVISED BY AMENDMENT 17)

CAD MAINTAINED DRAWING

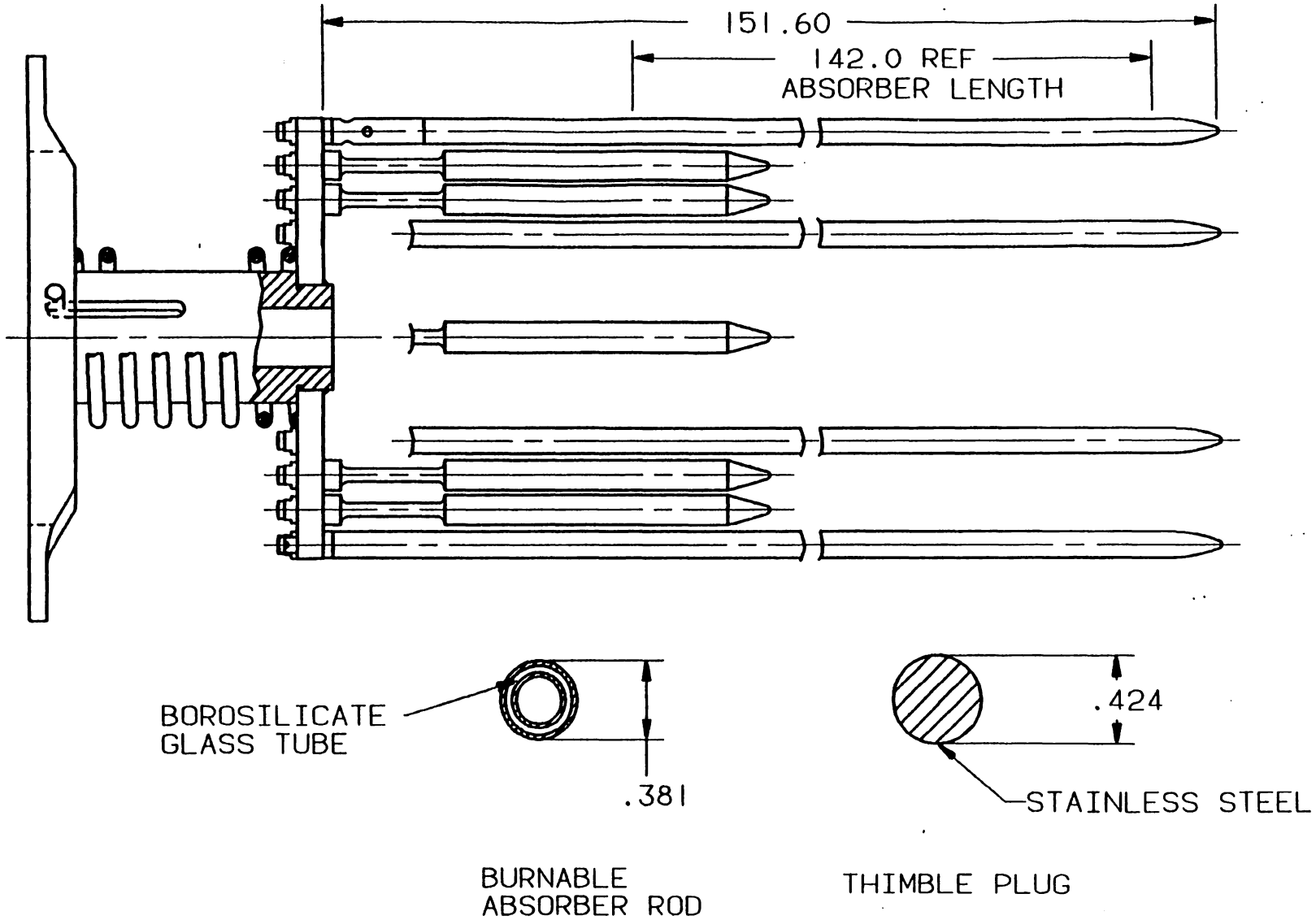

BURNABLE ABSORBER ASSEMBLY
FIGURE 4.2.3-2

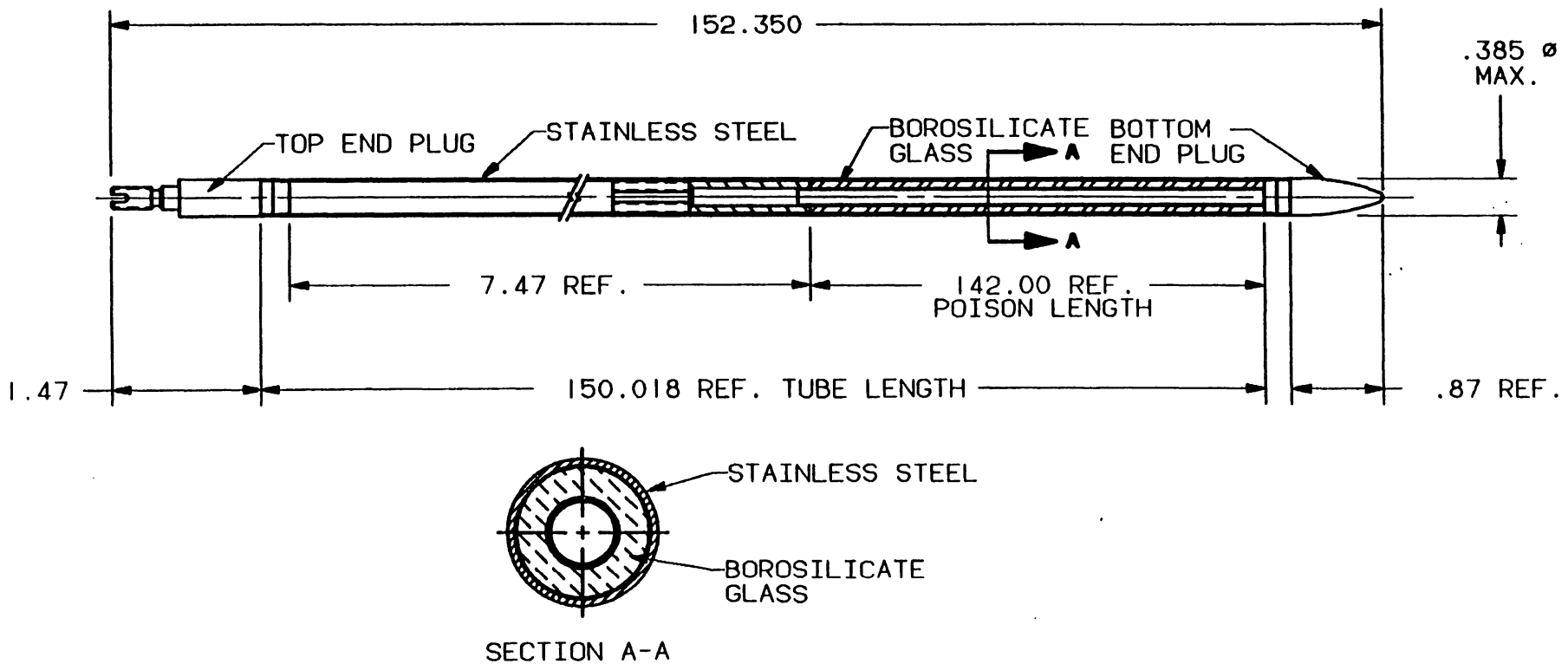

BURNABLE ABSORBER
ROD ASSEMBLY

FIGURE 4.2.3-2A

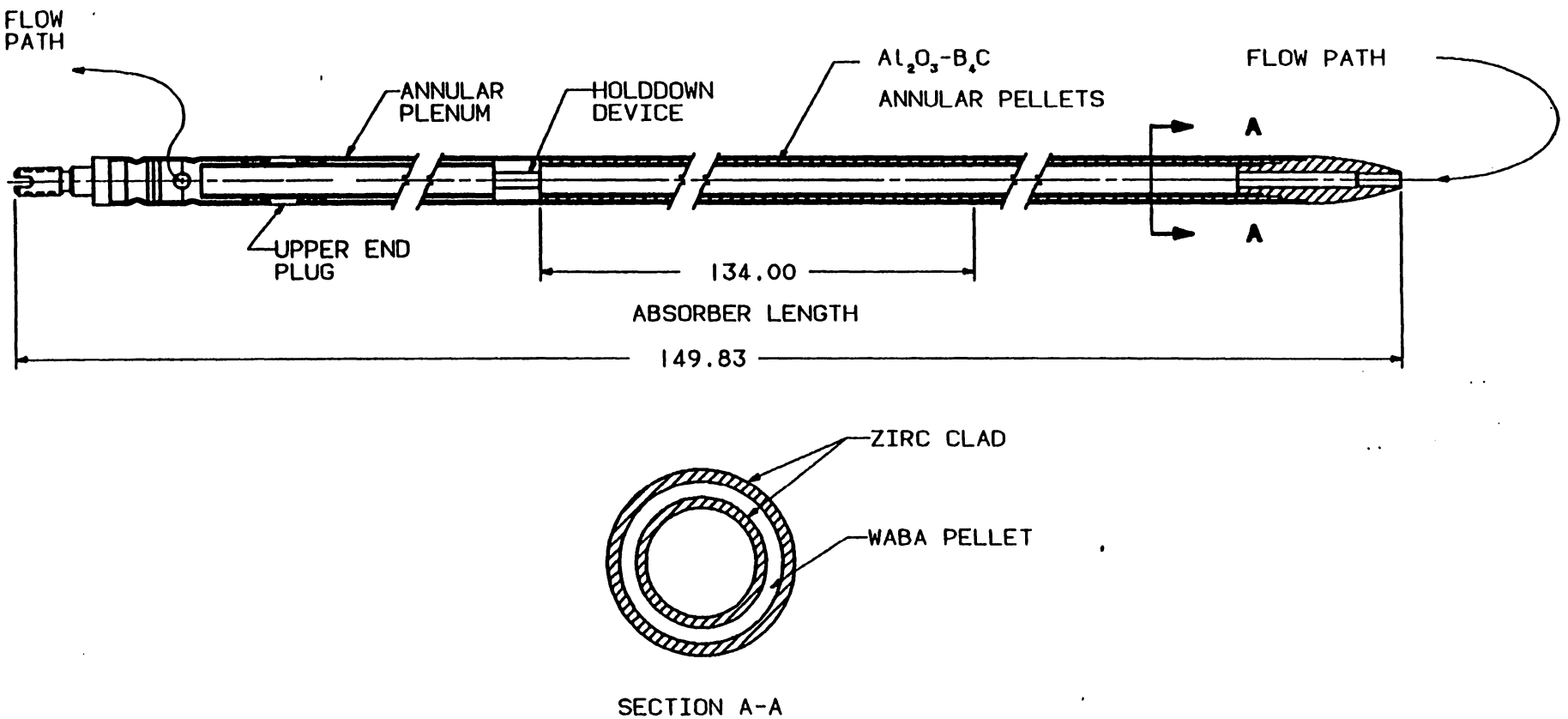

WET ANNULAR BURNABLE ABSORBER

FIGURE 4.2.3-3

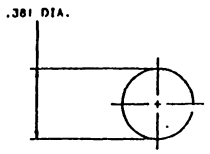

BURNABLE ABSORBER

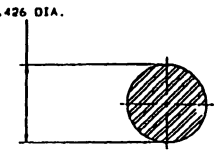

THIMBLE PLUG

NOTES:
1. ALL MATERIALS ARE TYPE 304 STAINLESS STEEL UNLESS OTHERWISE SPECIFIED.
2. ALL DIMENSIONS ARE NOMINAL UNLESS OTHERWISE SPECIFIED.
3. ESTIMATED WEIGHT OF 37.8 LBS. IS BASED ON 24 B/A RODS. THE ASSEMBLY WEIGHS LESS IF LESS THAN 24 B/A RODS ARE USED.
4. THE FINAL POSITION AND QUANTITY OF RODS MAY VARY FROM THE COMPOSITE VIEW CONFIGURATION, BUT THE OVERALL DIMENSIONS ARE FINAL.
5. BURNABLE ABSORBER ROD CLADDING AND END PLUG MATERIAL IS ZIRCALOY-4.

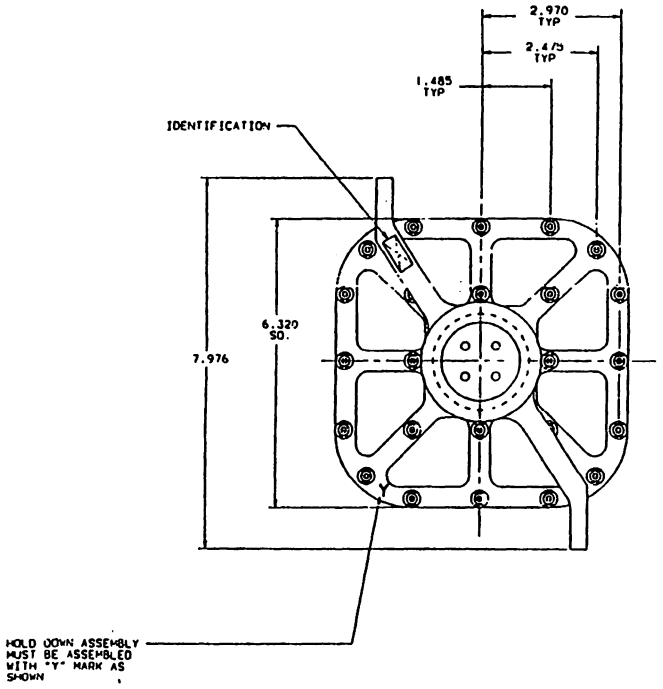

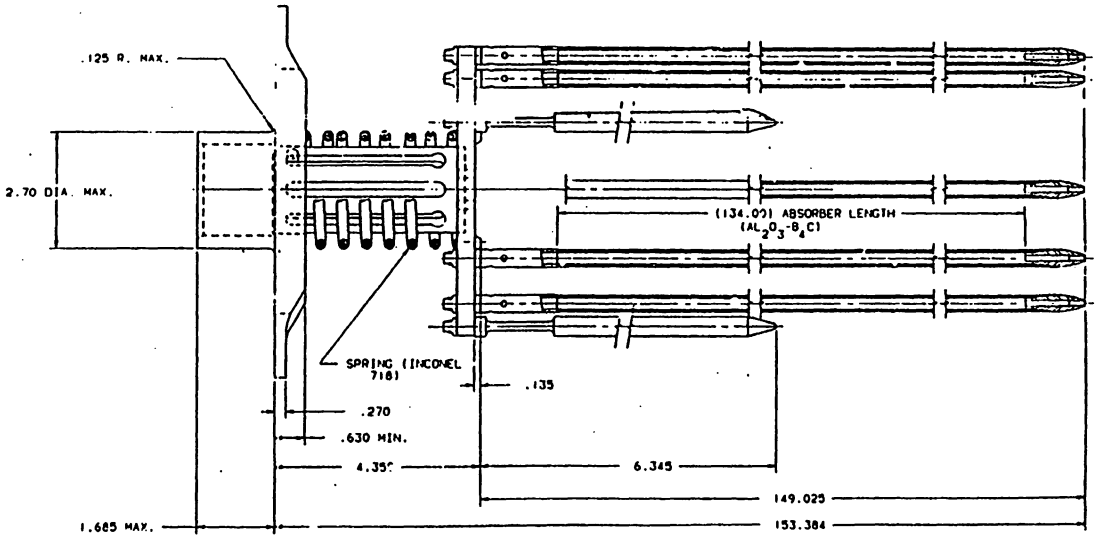

COMPOSITE VIEW
SHOWING REPRESENTATIVE LONGITUDINAL DIMENSIONS

17 x 17 WET ANNULAR BURNABLE ABSORBER ASSEMBLY

FIGURE 4.2.3-3A

WESTINGHOUSE PROPRIETARY

Westinghouse Electric Corporation
17 x 17 WET ANNULAR BURNABLE ABSORBER ASSEMBLY OUTLINE (WITH QUALIFY COMPATIBLE THIMBLE PLUGS)
1126E55

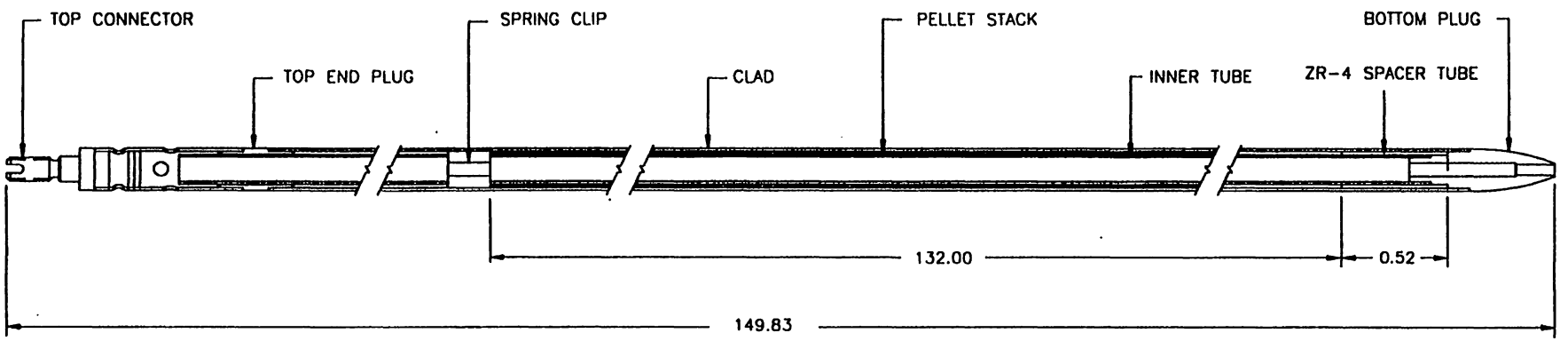

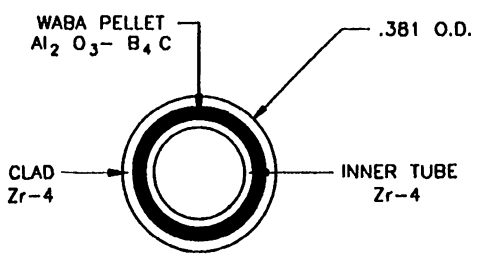

SECTION A-A

BURNABLE ABSORBER ROD

REDUCED LENGTH WET ANNULAR BURNABLE ABSORBER ROD ASSEMBLY
FIGURE 4.2.3-3B

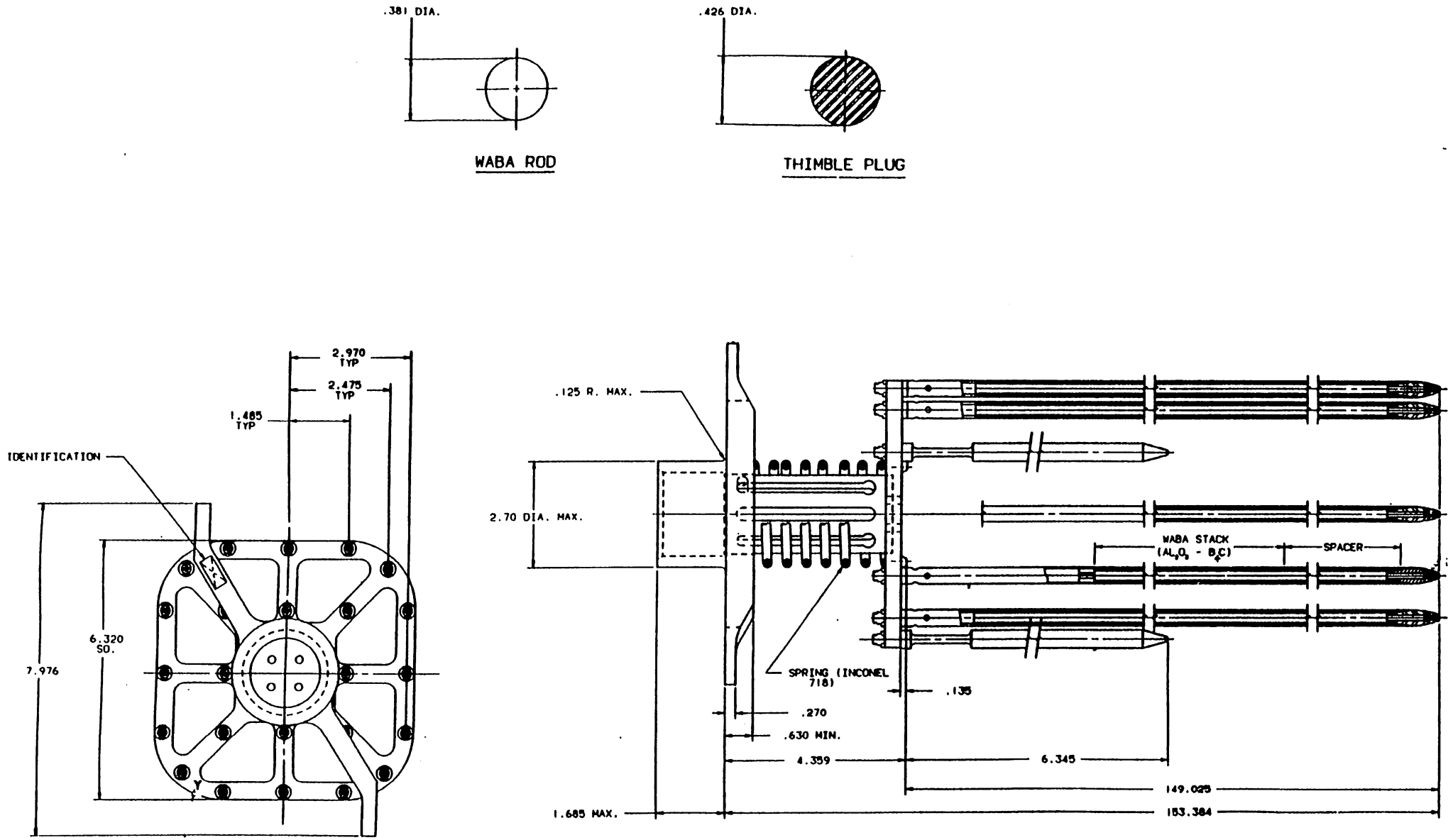

REDUCED LENGTH 17X17 WET ANNULAR BURNABLE ABSORBER ASSEMBLY
FIGURE 4.2.3-3C

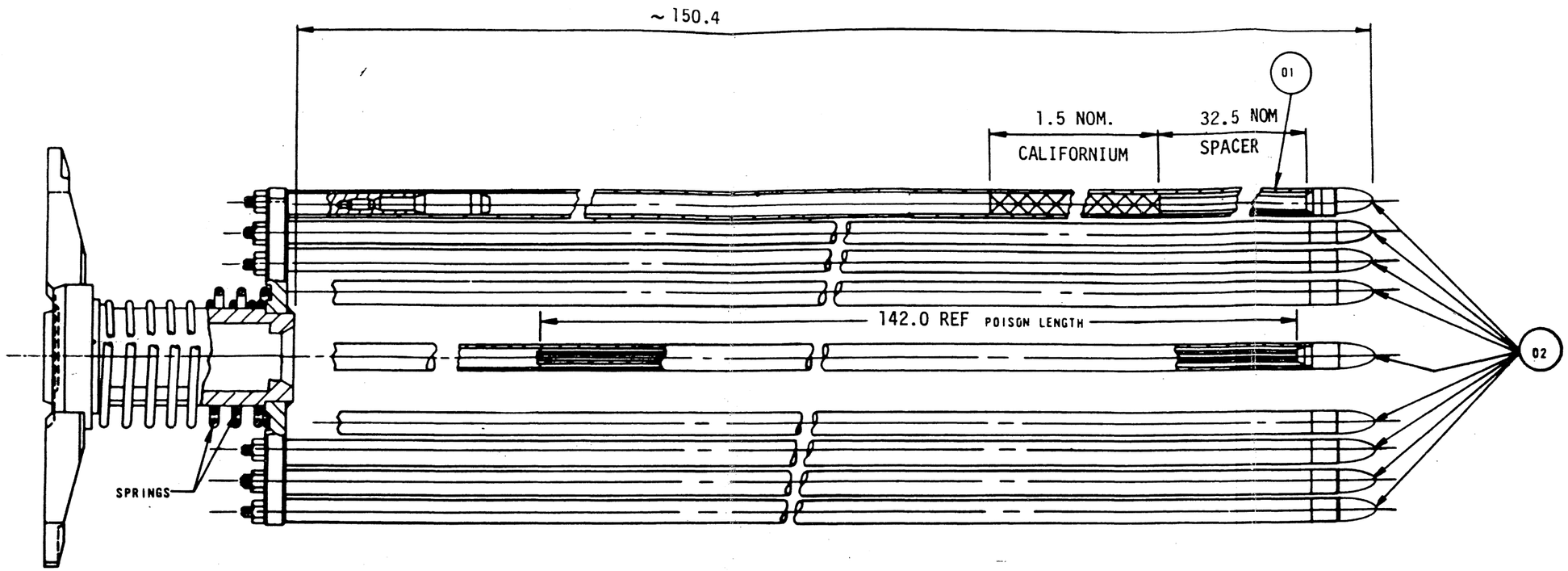

NOTE: ALL DIMENSIONS ARE IN INCHES

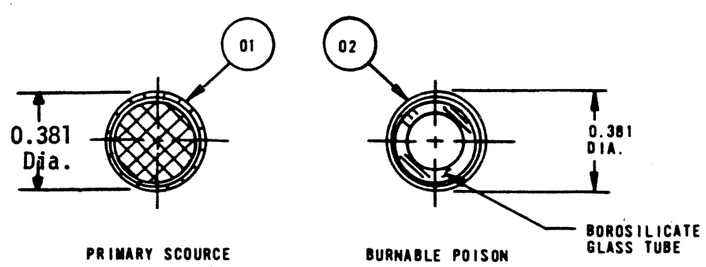

Figure 4.2.3-4 Primary Source Assembly

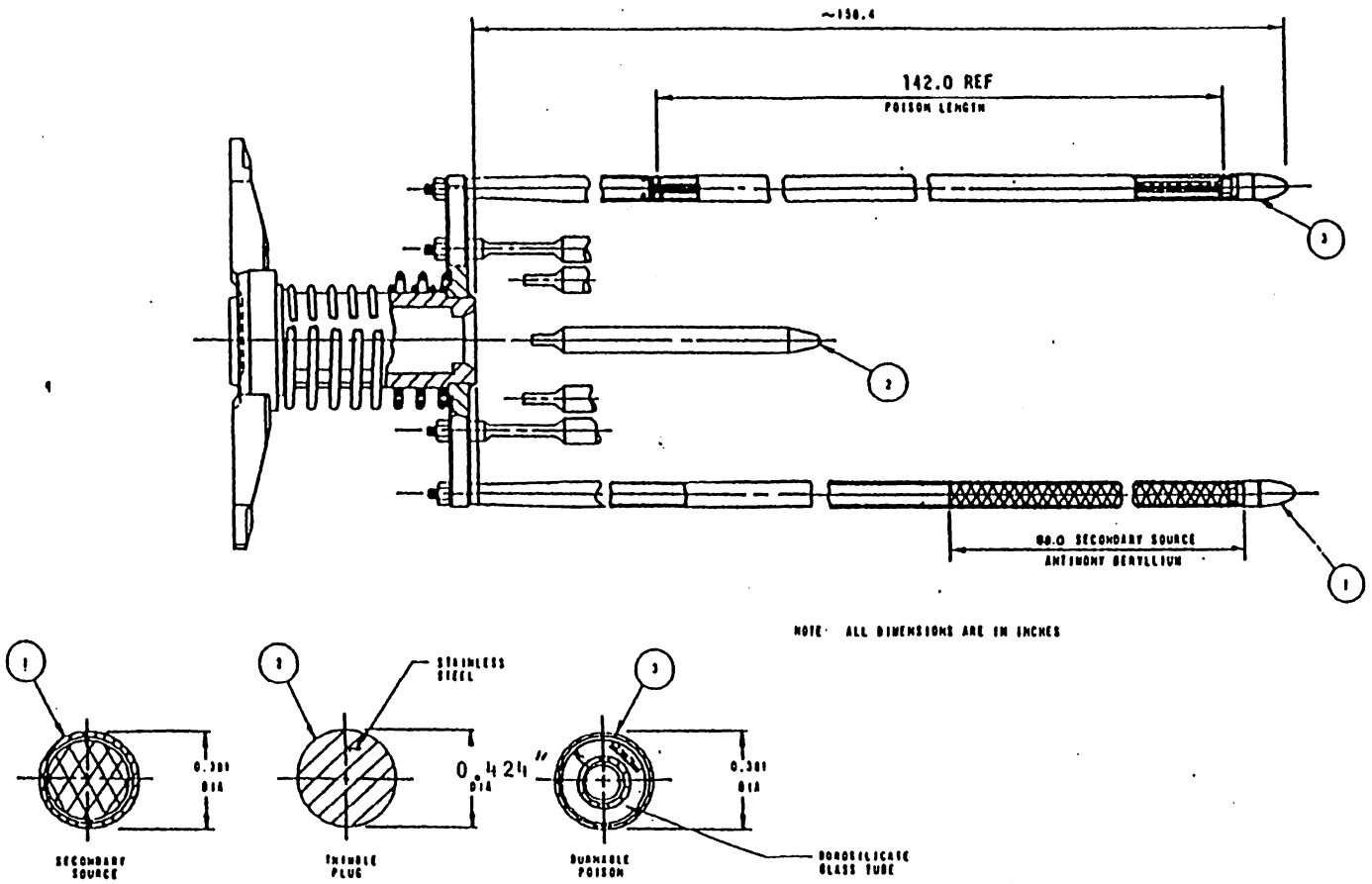

FIGURE 4.2.3-5a
SINGLE EXCAPSULATED SECONDARY
SOURCE RODLET

Revised by Amendment 10

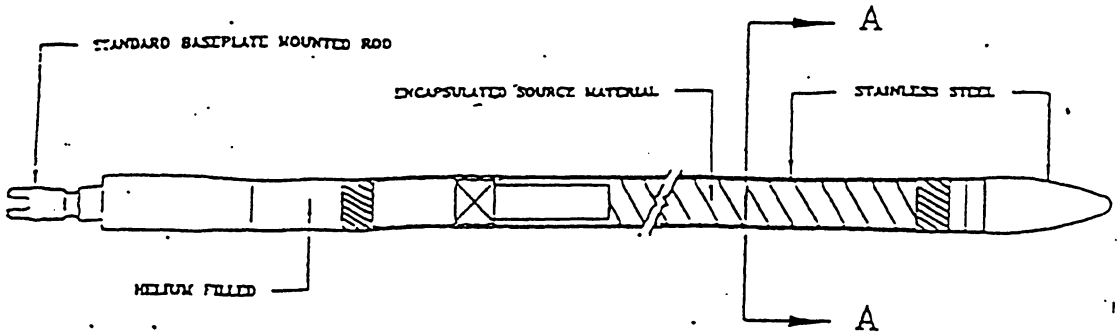

ENCAPSULATED SECONDARY SOURCE ASSEMBLY

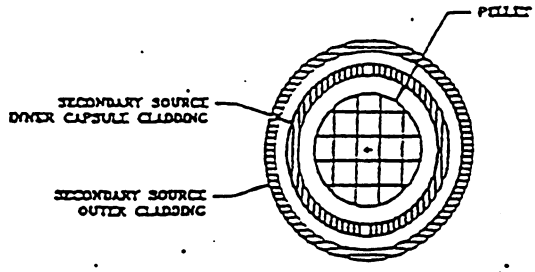

SECTION A–A

ENCAPSULATED SECONDARY SOURCE

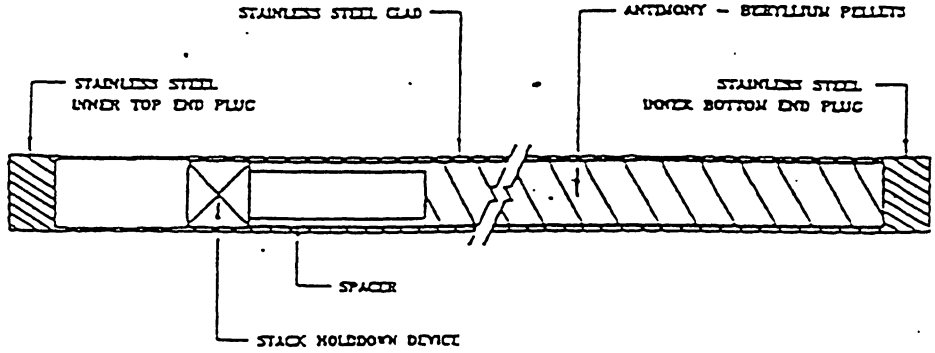

SECONDARY SOURCE
INNER CAPSULE

FIGURE 4.2.3-5b
DOUBLE ENCAPSULATED SECONDARY
SOURCE RODLET

Revised by Amendment 10

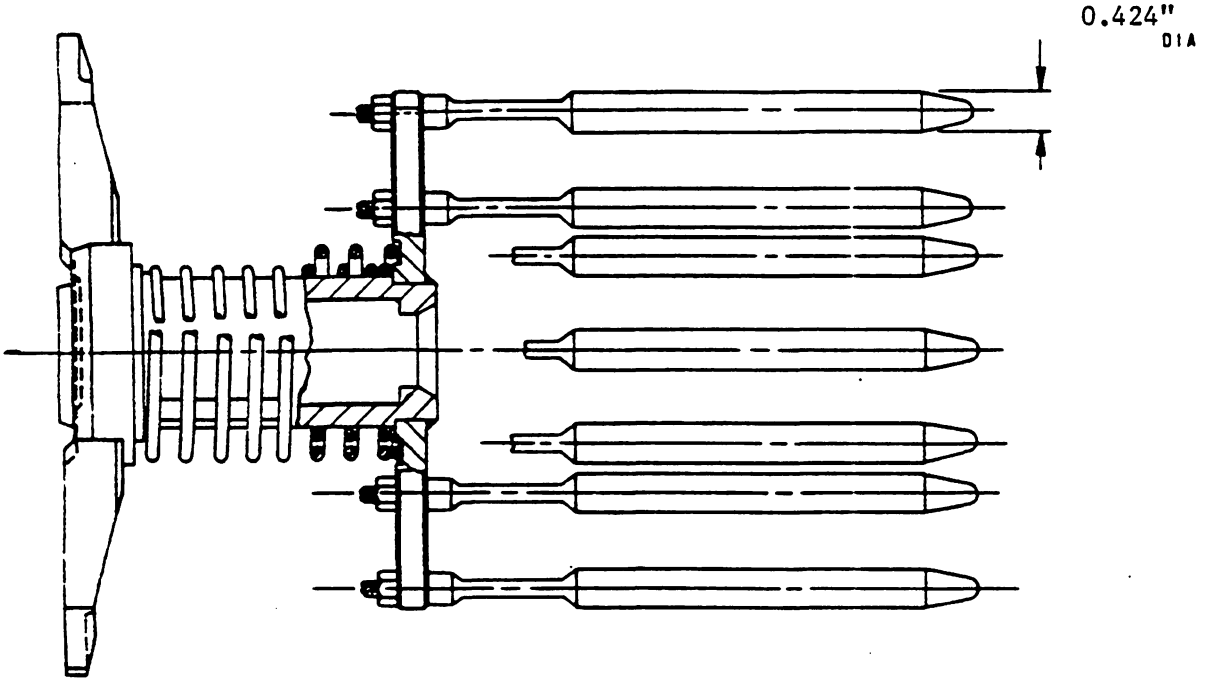

Figure 4.2.3-6 Thimble Plug Assembly

Revised by Amendment 1

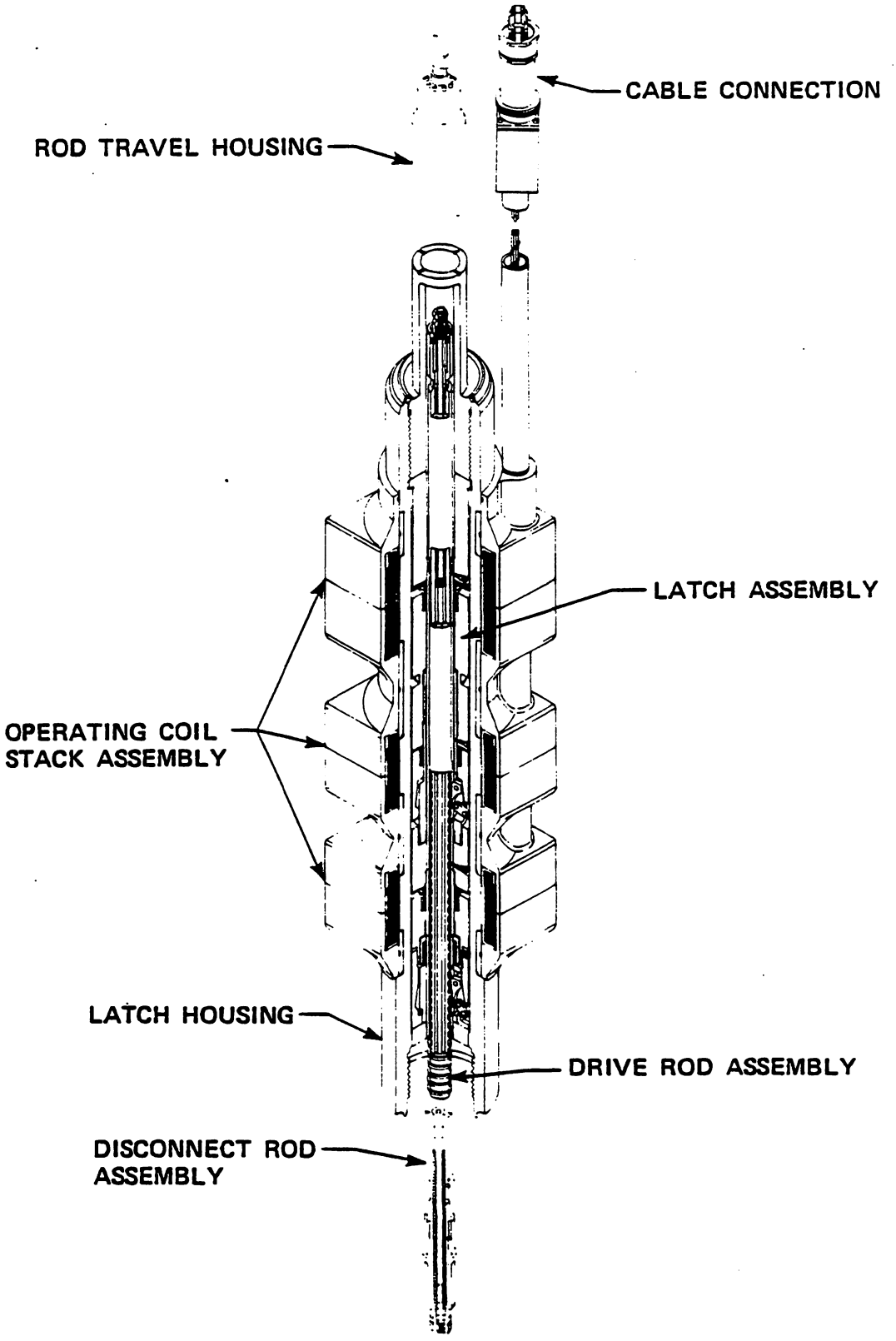

Figure 4.2.3- 7. Control Rod Drive Mechanism

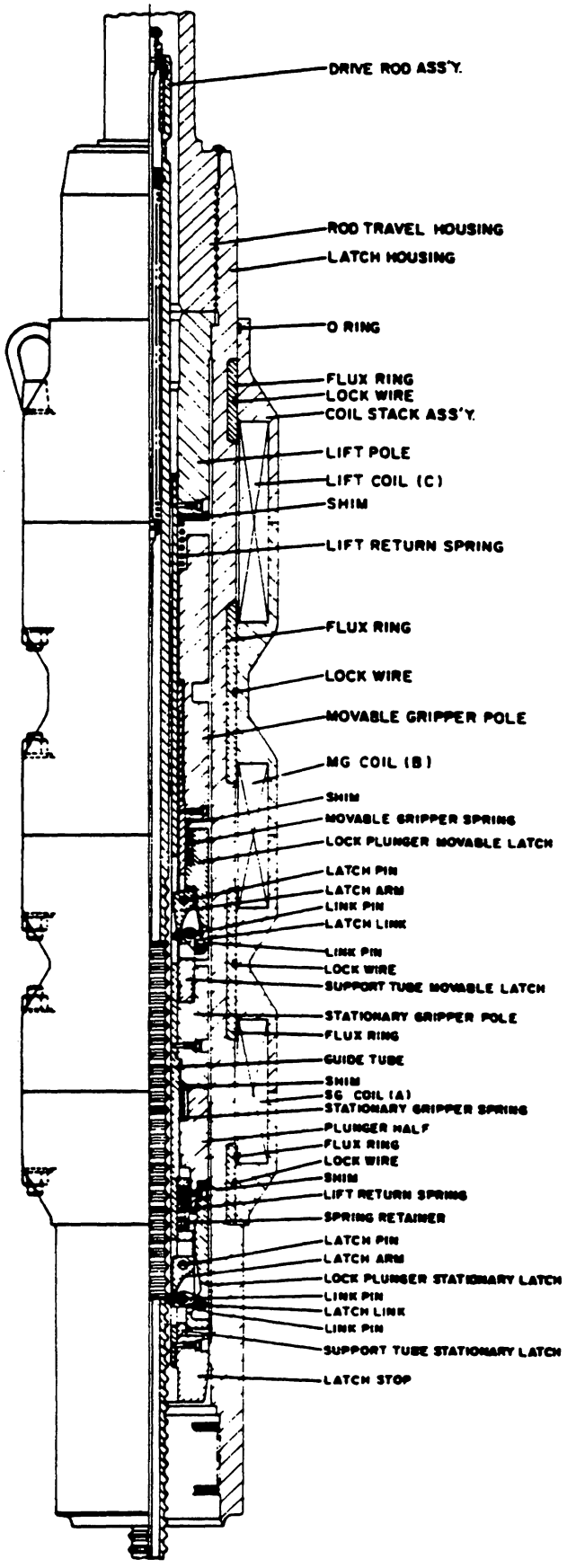

Figure 4.2.3-8. Control Rod Drive Mechanism Schematic

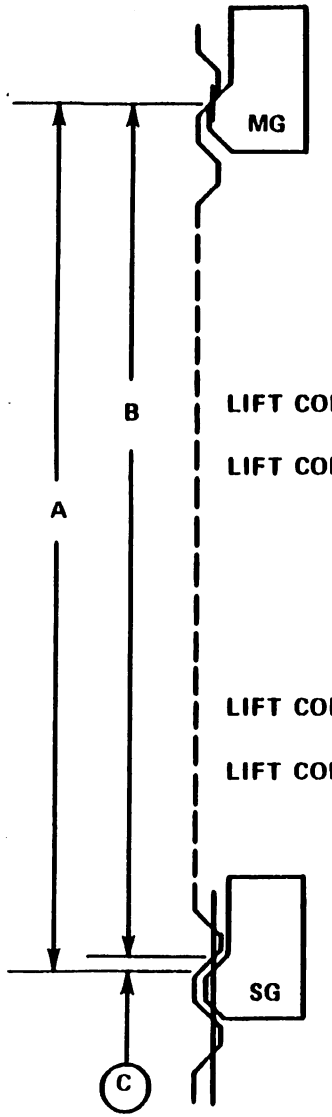

	AT 70°		
	A	B	C
LIFT COIL OFF	15.629	15.625	0.004
LIFT COIL ON	16.254	16.250	0.004

	AT 650°		
	A	B	C
LIFT COIL OFF	15.711	15.684	0.027
LIFT COIL ON	16.361	16.311	0.050

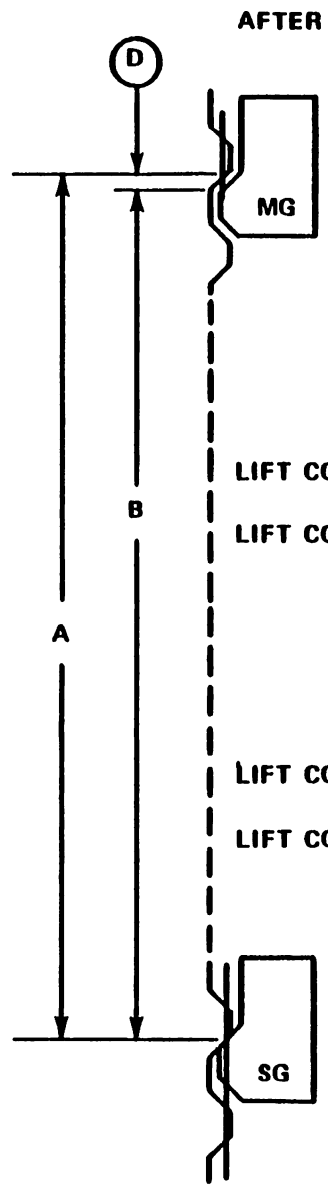

	AT 70°		
	A	B	D
LIFT COIL OFF	15.625	15.566	0.059
LIFT COIL ON	16.250	16.191	0.059

	AT 650°		
	A	B	D
LIFT COIL OFF	15.684	15.627	0.057
LIFT COIL ON	16.311	16.277	0.034

Figure 4.2.3-9 Nominal Latch Clearance at Minimum and Maximum Temperature

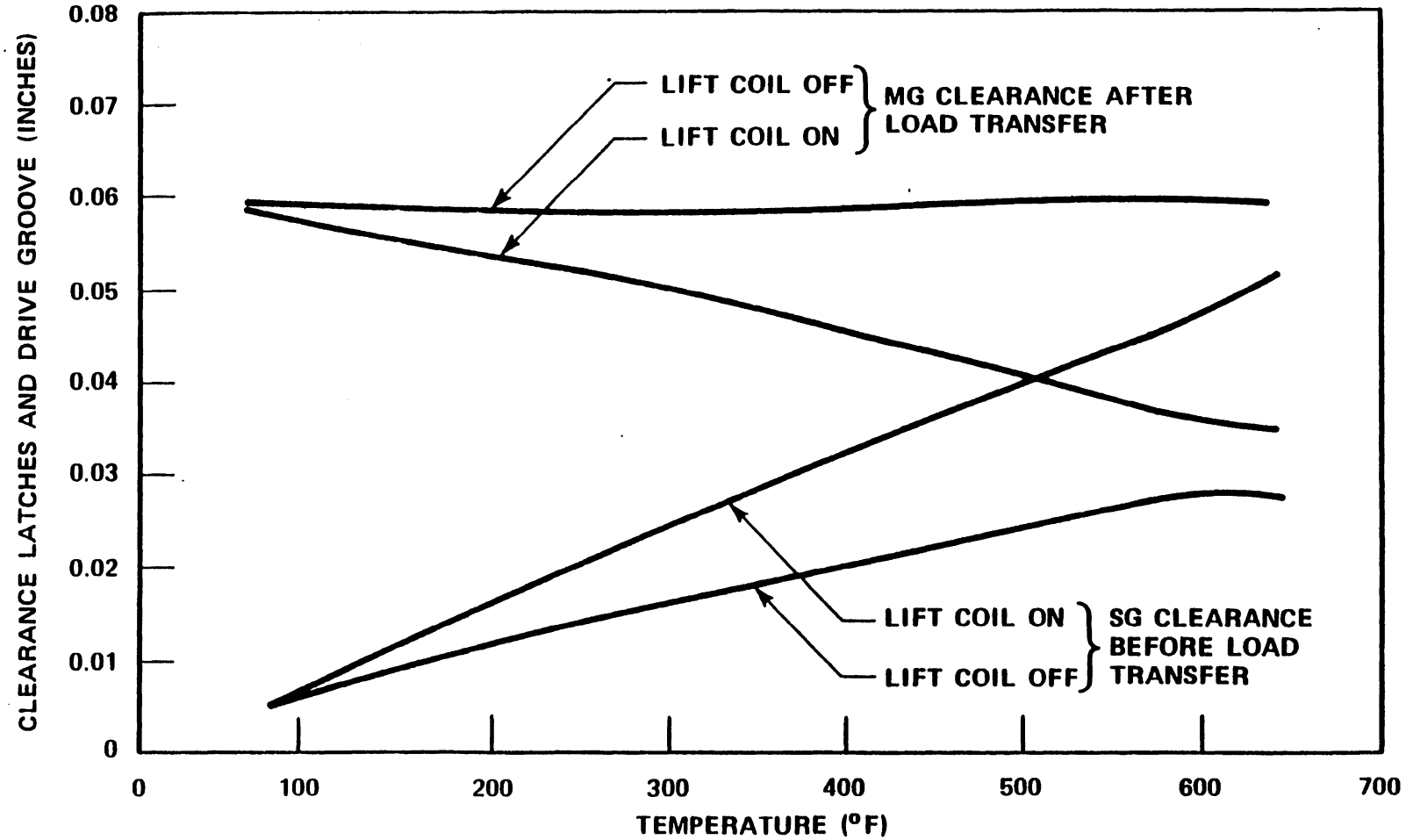

Figure 4.2.3-10 Control Rod Drive Mechanism Latch Clearance Thermal Effect

4.3 NUCLEAR DESIGN

4.3.1 Design Bases

This section describes the design bases and functional requirements used in the nuclear design of the fuel and reactivity control system and relates these design bases to the General Design Criteria (GDC) presented in 10 CFR 50, Appendix A. Where applicable, supplemental criteria such as the Final Acceptance Criteria for Emergency Core Cooling Systems are addressed. Before discussing the nuclear design bases it is appropriate to briefly review the four major categories ascribed to conditions of plant operation.

The full spectrum of plant conditions is divided into four categories, in accordance with the anticipated frequency of occurrence and risk to the public:

1. Condition I - Normal Operation
2. Condition II - Incidents of Moderate Frequency
3. Condition III - Infrequent Faults
4. Condition IV - Limiting Faults

In general the Condition I occurrences are accommodated with margin between any plant parameter and the value of that parameter which would require either automatic or manual protective action. Condition II incidents are accommodated with, at most, a shutdown of the reactor with the plant capable of returning to operation after corrective action. Fuel damage (Fuel damage as used here is defined as penetration of the fission product barrier, i.e., the fuel rod clad) is not expected during Condition I and Condition II events. It is not possible, however, to preclude a very small number of rod failures. These are within the capability of the CVCS and are consistent with the plant design basis.

Condition III incidents will not cause more than a small fraction of the fuel elements in the reactor to be damaged, although sufficient fuel element damage might occur to preclude immediate resumption of operation. The release of radioactive material due to Condition III incidents should not be sufficient to interrupt or restrict public use of these areas beyond the exclusion radius. Furthermore, a Condition III incident will not by itself generate a Condition IV fault or result in a consequential loss of function of the reactor coolant system or reactor containment barriers.

Condition IV occurrences are faults that are not expected to occur but are defined as limiting faults which must be designed against. Condition IV faults shall not cause a release of radioactive material that exceeds the limits of 10 CFR 100.

The core design power distribution limits related to fuel integrity are met for Condition I occurrences through conservative design and maintained by the action of the Control System. The requirements for Condition II occurrences are met by providing an adequate protection system which monitors reactor parameters. The Control and Protection Systems are described in Chapter 7 and the consequences of Condition II, III and IV occurrences are given in Chapter 15.

4.3.1.1 Fuel Burnup

Basis

The fuel rod design basis is described in Section 4.2. The nuclear design basis is to install sufficient reactivity in the fuel to attain a region discharge burnup of 48000 MWD/MTU. The above along with the Design Basis 4.3.1.3, Control of Power Distribution, satisfies GDC-10.

Discussion

Fuel burnup is a measure of fuel depletion which represents the integrated energy output of the fuel (MWD/MTU) and is a convenient means for quantifying fuel exposure criteria. The core design lifetime or design discharge burnup is achieved by installing sufficient initial excess reactivity in each fuel region and by following a fuel replacement program (such as that described in Subsection 4.3.2) that meets safety related criteria in each cycle of operation.

Initial excess reactivity installed in the fuel, although not a design basis, must be sufficient to maintain core criticality at full power operating conditions throughout cycle life with equilibrium xenon, samarium, and other fission products present. The end of design cycle life is defined to occur when the chemical shim concentration is essentially zero with control rods present to the degree desired for operational requirements (e.g., the controlling bank at the "bite" position or full out). In terms of chemical shim boron concentration this represents approximately 10 ppm with no control rod insertion.

A limitation on initial installed excess reactivity is not required other than as is quantified in terms of other Design Bases such as core Negative Reactivity Feedback and Shutdown Margin discussed below.

4.3.1.2 Negative Reactivity Feedbacks (Reactivity Coefficient)

Basis

The fuel temperature coefficient will be negative and the moderator temperature coefficient of reactivity will be non-positive for power operating conditions, thereby providing negative reactivity feedback characteristics. The design basis meets GDC-11.

Discussion

When compensation for a rapid increase in reactivity is considered, there are two major effects. These are the resonance absorption effects (Doppler) associated with changing fuel temperature and the spectrum effect resulting from changing moderator density. These basic physics characteristics are often identified by reactivity coefficients. The use of slightly enriched uranium ensures that the Doppler coefficient of reactivity is negative. This coefficient provides the most rapid reactivity compensation. The core is also designed to have an overall negative moderator temperature coefficient or reactivity so that the average coolant temperature or void content provides another, slower compensatory effect. The negative moderator temperature coefficient

can be achieved through use of fixed burnable absorbers, Integral Fuel Burnable Absorber (IFBA) and/or control rods, which decreases the concentration of soluble boron while maintaining reactivity control.

Restrictions on burnable absorber content (quantity and distribution) are not applied as a design basis other than as it relates to accomplishment of a non-positive moderator temperature coefficient at power operating conditions as discussed in Section 4.3.2.

4.3.1.3 Control of Power Distribution

Basis

The nuclear design basis is that, with at least a 95 percent confidence level:

1. Under normal operating conditions, at full power, the fuel will not be operated at a linear power greater than the HFP average linear power multiplied by the factor $F_Q^{RTP} * K(z)$, including an allowance of 0.7 percent for calorimetric error and not including a power spike factor due to densification. F_Q^{RTP} is the maximum heat flux hot channel factor, $F_Q(z)$, at 100 percent power. K(z) is the normalized $F_Q(z)$ as a function of core height.

2. Under abnormal conditions including the maximum overpower condition, the fuel peak power will not cause melting as defined in Paragraph 4.4.1.2.

3. The fuel will not operate with a power distribution that violates the departure from nucleate boiling (DNB) design basis (i.e., the DNBR will not be less than the safety analysis limits, as discussed in Subsection 4.4.1) under Condition I and II events including the maximum overpower condition.

4. Fuel management is such as to produce rod powers and burnups consistent with the assumptions in the fuel rod mechanical integrity analysis of Section 4.2.

The above basis meets GDC-10.

Discussion

Calculations of extreme power shapes which effect fuel design limits are performed with proven methods and verified frequently with measurements from operating reactors. The conditions under which limiting power shapes are assumed to occur are conservatively chosen with regard to any permissible operating state.

Even though there is good agreement between calculated peak power and measurements, a nuclear uncertainty margin is applied to the calculated peak local power. Such a margin is provided both for the analyses of normal operating states and for anticipated transients.

4.3.1.4 Maximum Controlled Reactivity Insertion Rate

Basis

The maximum reactivity insertion rate due to withdrawal of Rod Cluster Control Assemblies or by boron dilution is limited. This limit, expressed as a maximum reactivity change rate (75 pcm/sec where 1 pcm = 10^{-5} $\Delta\rho$) is set such that peak heat generation rate and DNBR do not exceed the maximum allowable at overpower conditions. This satisfies GDC-25.

The maximum reactivity worth of control rods and the maximum rates of reactivity insertion employing control rods are limited so that a Rod Withdrawal or Rod Ejection accident will not cause rupture of the coolant pressure boundary or disruption of the core internals to a degree which would impair core cooling capacity (see Chapter 15).

Following any Condition IV event (Rod Ejection, Steamline Break etc.) the reactor can be brought to the shutdown condition and the core will maintain coolable geometry. This satisfies GDC-28.

Discussion

Reactivity insertion associated with an accidental withdrawal of a control bank (or banks) is limited by the maximum rod speed (or travel rate) and by the worth of the bank(s). For this reactor the maximum control rod speed is 45 inches per minute and the maximum rate of reactivity change considering two control banks moving is less than 75 pcm/sec.

4.3.1.5 Shutdown Margins

Basis

Minimum shutdown margin (SDM) is required by the SQN Technical Specifications. The amount of SDM is specified in the SQN Core Operating Limits Report (COLR) and is required in all operating modes, hot shutdown and cold shutdown conditions.

In all analyses involving reactor trip, the single, highest worth Rod Cluster Control Assembly is postulated to remain untripped in its full-out position (stuck rod criterion). This satisfies GDC-26.

Discussion

Two independent reactivity control systems are provided: control rods and soluble boron in the coolant. The control rod system can compensate for the reactivity effects of the fuel and water temperature changes accompanying power level changes over the range from full-load to no-load. In addition, the control rod system provides the minimum shutdown margin under Condition I events and is capable of making the core subcritical rapidly enough to prevent exceeding acceptable fuel damage limits assuming that the highest worth control rod is stuck out upon trip.

The boron system can compensate for all xenon burnout reactivity changes and will maintain the reactor in the cold shutdown condition. Thus, backup and emergency shutdown provisions are provided by a mechanical and a chemical shim control system which satisfies GDC-26.

Basis

When fuel assemblies are in the pressure vessel and the vessel head is not in place, k_{eff} will be maintained at or below 0.95 with control rods and soluble boron.

Discussion

ANSI Standard N18.2 specifies a k_{eff} not to exceed 0.95 in spent fuel storage racks and transfer equipment flooded with pure water and a k_{eff} not to exceed 0.98 in normally dry new fuel storage racks assuming optimum moderation. No criterion is given for the refueling operation, however a 5 percent margin, which is consistent with spent fuel storage and transfer and the new fuel storage, is adequate for the controlled and continuously monitored operations involved.

The boron concentration required to meet the refueling shutdown criteria is specified in the SQN Technical Specifications. Verification that this shutdown criteria is met, including uncertainties, is achieved using standard design methods such as the ARK or PHOENIX-P and TURTLE or ANC codes. The subcriticality of the core is continuously monitored as described in the SQN Tech Specs.

4.3.1.6 Stability

Basis

The core will be inherently stable to power oscillations of the fundamental mode. This satisfies GDC-12.

Spatial power oscillations within the core, with a constant core power output, should they occur can be reliably and readily detected and suppressed.

Oscillations of the total power output of the core, from whatever cause, are readily detected by the loop temperature sensors and by the nuclear instrumentation. The core is protected by these systems and a reactor trip would occur if power unacceptably increased, preserving the design margins to fuel design limits. The stability of the turbine/steam generator/core systems and the reactor control system is such that total core power oscillations are not normally possible. The redundancy of the protection circuits ensures an extremely low probability of exceeding design power levels.

The core is designed so that diametral and azimuthal oscillations due to spatial xenon effects are self-damping and no operator action or control action is required to suppress them. The stability to diametral oscillations is so great that this excitation is highly improbable. Convergent azimuthal oscillations can be excited by prohibited motion of individual control rods. Such oscillations are readily observable and alarmed, using the excore long ion chambers. Indications are also continuously available from incore thermocouples and loop temperature measurements. Moveable incore detectors can be activated to provide more detailed information. In all cores, these horizontal plane oscillations are self-damping by virtue of reactivity feedback effects designed into the core.

However, axial xenon spatial power oscillations may occur late in core life. The control bank and excore detectors are provided for control and monitoring of axial power distributions.

Assurance that fuel design limits are not exceeded is provided by reactor Overpower ΔT and Overtemperature ΔT trip functions which use the measured axial power imbalance as an input.

4.3.1.7 Anticipated Transients Without Trip

The effects of anticipated transients with failure to trip are not considered in the Design Bases of the plant. Analysis has shown that the likelihood of such a hypothetical event is negligibly small. Furthermore, analysis of the consequences of a hypothetical failure to trip following anticipated transients has shown that no significant core damage would result and system peak pressures would be limited to such that the primary stress anywhere in the system boundary is less than the "emergency conditions" defined in the ASME Nuclear Power Plant Components Code, Section III, acceptable values and no failure of the Reactor Coolant System would result. (Reference 1).

4.3.2 Description

4.3.2.1 Nuclear Design Description

The reactor core consists of a specified number of fuel rods which are held in bundles by spacer grids and top and bottom fittings. The fuel rods are constructed of cylindrical Zircaloy tubes containing UO_2 fuel pellets. The bundles, known as fuel assemblies, are arranged in a pattern which approximates a right circular cylinder.

Each fuel assembly contains a 17 x 17 rod array composed of 264 fuel rods, 24 rod cluster control (RCC) thimbles and an incore instrumentation thimble. Figure 4.2.1-1 shows a cross sectional view of a 17 x 17 fuel assembly and the related RCC locations. Further details of the fuel assembly are given in Subsection 4.2.1.

Fuel assemblies of three different enrichments were used in the initial core loading to establish a favorable radial power distribution. Figure 4.3.2-1 shows the fuel loading pattern used in the first core. Two regions consisting of the two lower enrichments are interspersed so as to form a checkerboard pattern in the central portion of the core. The third region is arranged around the periphery of the core and contains the highest enrichment. The enrichments for the first core are shown in Table 4.3.2-1.

Reload cores will normally operate approximately 16.5 months at full power operation, accumulating approximately 17,500 MWD/MTU per cycle. The exact reloading pattern, initial and final positions of assemblies, and the number of fresh assemblies and their placement are dependent on the energy requirements for the next cycle and burnup and power histories of the previous cycles.

The core average enrichment is determined by the amount of fissionable material required to provide the desired core lifetime and energy requirements. The physics of the burnout process is such that operation of the reactor depletes the amount of fuel available due to the absorption of neutrons by the U-235 atoms and their subsequent fission. In addition, the fission process

results in the formation of fission products, some of which readily absorb neutrons. These effects, depletion and the buildup of fission products, are partially offset by the buildup of plutonium from the non-fission absorption of neutrons in U-238, as shown in Figure 4.3.2-2 for a typical 17 x 17 fuel assembly. Therefore, at the beginning of any cycle a reactivity reserve equal to the depletion of the fissionable fuel and the buildup of fission product poisons over the specified cycle life must be "built" into the reactor. This excess reactivity is controlled by removable neutron absorbing material in the form of boron dissolved in the primary coolant, integral fuel burnable absorbers and burnable poison rods.

The concentration of boric acid in the primary coolant is varied to provide control and to compensate for long term reactivity requirements. The concentration of the soluble neutron absorber is controlled by means of the Chemical Volume and Control System (CVCS) to compensate for reactivity changes due to fuel burnup, fission product poisoning including xenon and samarium, burnable absorber depletion, and the cold-to-operating moderator temperature change. Rapid transient reactivity requirements and safety shutdown requirements are met with control rods.

As the boron concentration is increased, the moderator temperature coefficient becomes less negative. The use of a soluble absorber alone would result in a positive moderator coefficient at BOL for the first cycle. Therefore, burnable absorbers are used in the first core to sufficiently reduce the soluble boron concentration to ensure that the moderator temperature coefficient is negative at power operating conditions. During operation the absorber content in these rods is depleted, thus adding positive reactivity to offset some of the negative reactivity from fuel depletion and fission product buildup. The depletion rate of the burnable absorber rods is not critical since chemical shim is always available and flexible enough to cover any possible deviations in the expected burnable absorber depletion rate. Figure 4.3.2-3 is a graph of a typical core depletion with and without burnable absorber rods. Note that even at end-of-life conditions some residual absorber remains in the fixed burnable absorbers, resulting in a net decrease in the first cycle lifetime.

In addition to reactivity control, the burnable absorber rods are strategically located to provide a favorable radial power distribution. Figure 4.3.2-4 shows the burnable absorber distribution within a fuel assembly for the several burnable absorber patterns used in a 17 x 17 array. The initial core burnable absorber loading pattern is shown in Figure 4.3.2-5.

Tables 4.3.2-1 through 4.3.2-3 contain a summary of the reactor core design parameters for the first fuel cycle, including reactivity coefficients, delayed neutron fraction and neutron lifetimes. Sufficient information is included to permit an independent calculation of the nuclear performance characteristics of the core.

4.3.2.2 Power Distributions

The accuracy of power distribution calculations has been confirmed through approximately one thousand flux maps during some twenty years of operation under conditions very similar to those expected for Sequoyah. Details of this confirmation are given in Reference 2 and in Subparagraph 4.3.2.2.6.

4.3.2.2.1 Definitions

Power distributions are quantified in terms of hot channel factors. These factors are a measure of the peak pellet power within the reactor core and the total energy produced in a coolant channel, relative to the total reactor power output, and are expressed in terms of quantities related to the nuclear or thermal design namely:

Power density is the thermal power produced per unit volume of the core (kw/liter).

Linear power density is the thermal power produced per unit length of active fuel (kw/ft). Since fuel assembly geometry is standardized, this is the unit of power density most commonly used. For all practical purposes it differs from kw/liter by a constant factor which includes geometry and the fraction of the total thermal power which is generated in the fuel rod.

Average linear power density is the total thermal power produced in the fuel rods divided by the total active fuel length of all rods in the core.

Local heat flux is the heat flux at the surface of the cladding (BTU-ft^{-2} - hr^{-1}). For nominal rod parameters this differs from linear power density by a constant factor.

Rod power or rod integral power is the length integrated linear power density in one rod (kw).

Average rod power is the total thermal power produced in the fuel rods divided by the number of fuel rods (assuming all rods have equal length).

The hot channel factors used in the discussion of power distributions in this section are defined as follows:

F_Q, Heat Flux Hot Channel Factor, is defined as the maximum local heat flux on the surface of a fuel rod divided by the average fuel rod heat flux, allowing for manufacturing tolerances on fuel pellets and rods and including fuel densification effects.

F^N_Q, Nuclear Heat Flux Hot Channel Factor, is defined as the maximum
local fuel rod linear power density divided by the average fuel rod linear power density, assuming nominal fuel pellet and rod parameters.

F^E_Q, Engineering Heat Flux Hot Channel Factor, is the allowance on heat flux required for manufacturing tolerances. The engineering factor allows for local variations in enrichment, pellet density and diameter, surface area of the fuel rod and eccentricity of the gap between pellet and clad.

Statistically combined the net effect is a factor of 1.03 to be applied to fuel rod surface heat flux.

$F^N_{\Delta H}$, Nuclear Enthalpy Rise Hot Channel Factor, is defined as the ratio of the integral of linear power along the rod with the highest integrated power to the average rod power.

Manufacturing tolerances, hot channel power distribution and surrounding channel power distributions are explicitly treated in the calculation of DNB ratio described in Section 4.4.

It is convenient for the purposes of discussion to define subfactors of F_Q, however, design limits are set in terms of the total peaking factor.

F_Q = Total peaking factor or heat flux hot channel factor

$$= \frac{\text{Maximum kw/ft}}{\text{Average kw/ft}}$$

without densification effects

$$F_Q = F^N_Q \times F^E_Q$$

$$= F^N_{XY} \times F^N_Z \times F^N_U \times F^E_Q$$

where

F^N_Q and F^E_Q are defined above.

F^U_N = the measurement uncertainty associated with a full core flux map with moveable detectors

F^N_{XY} = ratio of peak power density to average power density in the horizontal plane of peak local power.

F^N_Z = ratio of the power per unit core height in the horizontal plane of peak local power to the average value of power per unit core height. If the plane of peak local power coincides with the plane of maximum power per unit core height then F^N_z is the core average axial peaking factor.

To include the allowances made for densification effects, which are height dependent, the following quantities are defined.

S(Z) = the allowance made for densification effects at height Z in the core. See Subparagraph 4.3.2.2.5.

P(Z) = ratio of the power per unit core height in the horizontal plane at height Z to the average value of power per unit core height.

$F^N_{XY}(Z)$ = ratio of peak power density to average power density in horizontal plane of height Z.

Then

F_Q = Total peaking factor

$$= \frac{\text{Maximum Kw/ft}}{\text{Average Kw/ft}}$$

Including densification allowance

$$F_Q = \max\left[F_{XY}^N(Z) \text{ x } P(Z)\right] \text{ x } S(Z) \text{ x } F_U^N \text{ x } F_Q^E$$

4.3.2.2.2 Radial Power Distributions

The power shape in horizontal sections of the core at full power is a function of the fuel assembly and burnable poison loading patterns, the control rod pattern and the fuel burnup distribution. Thus, at any time in the cycle any horizontal section of the core can be characterized as unrodded or with group D control rods. These two situations combined with burnup effects determine the radial power shapes which can exist in the core at full power. The effect on radial power shapes of power level, xenon, samarium and moderator density effects are considered also but these are quite small. The effect of non-uniform flow distribution is negligible. While radial power distributions in various planes of the core are often illustrated, the core radial enthalpy rise distribution as determined by the integral of power up each channel is of greater interest. Figures 4.3.2-6 through 4.3.2-11 show representative radial power distributions for one eighth (1/8) of the core for representative operating conditions. These conditions are 1) Hot Full Power (HFP) at Beginning-of-Life (BOL), unrodded, no xenon, 2) HFP at BOL, unrodded, equilibrium xenon, 3) HFP at BOL, Bank D, equilibrium xenon, 4) HFP at Middle-of-Life, unrodded, equilibrium xenon, and 5) HFP at End-of-Life (EOL), unrodded, equilibrium xenon.

Since the position of the hot channel varies from time to time, a single reference radial design power distribution is selected for DNB calculations. This reference power distribution is conservatively chosen to concentrate power in one area of the core, minimizing the benefits of flow redistribution. Assembly powers are normalized to core average power.

4.3.2.2.3 Assembly Power Distributions

For the purpose of illustration, assembly power distributions from the BOL and EOL conditions corresponding to Figures 4.3.2-7 and 4.3.2-11, respectively, are given for the same assembly in Figures 4.3.2-12 and 4.3.2-13, respectively.

Since the detailed power distribution surrounding the hot channel varies from time to time, a conservatively flat assembly power distribution is assumed in the DNB analysis, described in Section 4.4, with the rod of maximum integrated power artificially raised to the design value of $F^N_{\Delta H}$. Care is taken in the nuclear design of all fuel cycles and all operating conditions to ensure that a flatter assembly power distribution does not occur with limiting values of $F^N_{\Delta H}$.

4.3.2.2.4 Axial Power Distributions

The shape of the power profile in the axial or vertical direction is largely under the control of the operator through the manual operation of the control rods or automatic motion of the rods in response to CVCS operation. Nuclear effects which cause variations in the axial power shape include moderator density, Doppler effect on resonance absorption, spatial distribution of xenon and burnup. Automatically controlled variations in total power output and full length rod motion are also important in determining the axial power shape at any time. Signals are available to the operator from the excore ion chambers which are long ion chambers outside the reactor vessel

running parallel to the axis of the core. Separate signals are taken from the top and bottom halves of the chambers. The difference between top and bottom signals from each of four pairs of detectors is displayed on the control panel and called the Flux Imbalance ΔI. Calculations of the core average peaking factor for many plants and measurements from operating plants under many operating situations are associated with either ΔI or axial offset in such a way that an upper bound can be place on the peaking factor. For these correlations axial offset is defined as

$$\text{axial offset} = \frac{\Phi t - \Phi b}{\Phi t + \Phi b}$$

and Φt and Φb are the top and bottom detector readings.

Representative axial power shapes from Reference 3 for BOL, MOL, and EOL conditions are shown in Figures 4.3.2-14 through 4.3.2-16. These figures cover a wide range of axial offset, including values not permitted at full power.

The radial power distribution shown in Figure 4.3.2-8 involving the partial insertion of control rods represent a synthesis of power shapes from the rodded and unrodded planes. The applicability of the separability assumption upon which this procedure is based is ensured through extensive three-dimensional calculations of possible rodded conditions. As an example, Figure 4.3.2-17 compares the axial power distribution for several assemblies at different distances from inserted control rods with the core average axial distribution.

The only significant difference from the average occurs in the low power peripheral assemblies, thus, confirming the validity of the separability assumption.

4.3.2.2.5 Local Power Peaking

Fuel densification, which has been observed to occur under irradiation in several operating reactors, causes the fuel pellets to shrink both axially and radially. The pellet shrinkage combined with random hang-up of fuel pellets results in gaps in the fuel column when the pellets below the hung-up pellet settle in the fuel rod. The gaps vary in length and location in the fuel rod. Because of decreased neutron absorption in the vicinity of the gap, power peaking occurs in the adjacent fuel rods resulting in an increased power peaking factor. A quantitative measure of this local power peaking is given by the power spike factor, S(Z), where Z is the axial location in the core.

The method used to compute the power spike factor is described in Reference 4 and is summarized in Figure 4.3.2-18. The information flow outlined in Figure 4.3.2-18 is as follows:

1. The probability that an axial gap of a certain size will occur at a given location in the core is determined from fuel performance data.

2. The magnitude of the power spike caused by a single axial gap of a certain size is determined from nuclear calculations as shown in Figure 4.3.2-19. This curve is valid for uranium fuel enrichments up to 5.0 w/o (Reference 29).

3. For each axial interval to be analyzed, axial gap occurrence probabilities and the single event power spikes are entered into the DRAW computer code. The code produces a curve of power spike vs. probability of exceeding power spike for each elevation in the core. The power census for a core is then statistically combined with the power spike probability curve to obtain a power spike penalty for the core such that less than one rod will exceed F_Q at a 95-percent confidence level.

The power spike factor due to densification is assumed to be a local perturbation. Thus, densification effects F_Q but not $F_{\Delta H}$. The magnitude of the increased power peaking which increases from no effect at the bottom of the core to a few percent at the top of the core is shown in Figure 4.3.2-20. This curve is applicable for fuel pellets that have a density of at least 93.5 percent (geometric).

For fuel produced by a process other than those for which Reference 3 is applicable, specifications will be followed to ensure that the effects of densification will be no greater than has been allowed in the design. The specifications for quantifying the extent of densification will be based on the NRC report on fuel densification (Reference 4).

Results reported in Reference 5 show that the power spike penalty should not be included in determining the predicted F_Q.

4.3.2.2.6 Limiting Power Distribution

According to the ANSI classification of plant conditions (see Section 15.0), Condition I occurrences are those which are frequently or regularly expected in the course of power operation, maintenance, or maneuvering of the plant. As such, Condition I occurrences are accommodated with margin between any plant parameter and the value of that parameter which would require either automatic or manual protective action. Inasmuch as Condition I occurrences frequently or regularly occur, they must be considered from the point of view of effecting the consequences of fault conditions (Condition II, III and IV). In this regard, analysis of each fault condition described is generally based on a conservative set of initial conditions corresponding to the most adverse set of conditions which can occur during Condition I operation.

The list of steady state and shutdown conditions, permissible deviations (such as one coolant loop out of service) and operational transients is given in Section 15.1. Implicit in the definition of normal operation is proper and timely action by the reactor operator. That is, the operator follows recommended operating procedures for maintaining appropriate power distributions and takes any necessary remedial actions when alerted to do so by the plant instrumentation. Thus, as stated above, the worst or limiting power distribution which can occur during normal operation is to be considered as the starting point for analysis of ANSI Conditions II, III and IV events.

Improper procedural actions or errors by the operator are assumed in the design as occurrences of moderate frequency (ANSI Condition II). Some of the consequences which might result are listed in Section 15.2. Therefore, the limiting power shapes which result from such Condition II events, are those power shapes which deviate from the normal operating condition at the recommended axial offset band, e.g. due to lack of proper action by the operator during a xenon

transient following a change in power level brought about by control rod motion. Power shapes which fall in this category are used for determination of the reactor protection system setpoints so as to maintain margin to overpower or DNB limits.

The means for maintaining power distributions within the required hot channel factor limits are described in the SQN Technical Specifications. A complete discussion of power distribution control in Westinghouse PWRs is included in Reference 6. Reference 30 describes the axial offset control strategy used at SQN. Detailed information on the design constraints on local power density in a Westinghouse PWR, on the defined operating procedures and on the measures taken to preclude exceeding design limits is presented in the Westinghouse Topical Report on peaking factors (Reference 7). The following paragraphs summarize these reports and describe the calculations used to establish the upper bound on peaking factors.

The calculations used to establish the upper bound on peaking factors, F_Q and $F_{\Delta H}$, include all of the nuclear effects which influence the radial and/or axial power distributions throughout core life for various modes of operation including load follow, reduced power operation, and axial xenon transients.

Radial power distributions are calculated for the full power condition, and fuel and moderator temperature feedback effects are included for the average enthalpy plane of the reactor. The steady state nuclear design calculations are done for normal flow with the same mass flow in each channel and flow redistribution effects neglected. The effect of flow redistribution is calculated explicitly where it is important in the DNB analysis of accidents. The effect of xenon on radial power distribution is small (compare Figures 4.3.2-6 and 4.3.2-7), but is included as part of the normal design process. Radial power distributions are relatively fixed and easily bounded with upper limits.

The core average axial profile, however, can experience significant changes which can rapidly occur as a result of rod motion and load changes and more slowly due to xenon distribution. For the study of points of closest approach to axial power distribution limits, several thousand cases are examined. Since the properties of the nuclear design dictate what axial shapes can occur, boundaries on the limits of interest can be set in terms of the parameters which are readily observed on the plant. Specifically, the nuclear design parameters which are significant to the axial power distribution analysis are:

1. core power level
2. core height
3. coolant temperature and flow
4. coolant temperature program as a function of reactor power
5. fuel cycle lifetimes
6. rod bank worths
7. rod bank overlaps

Normal operation of the plant assumes compliance with the following conditions:

1. Control rods in a single bank move together with no individual rod insertion differing by more than 12 steps (indicated) from the bank demand position;

2. Control banks are sequenced with overlapping banks;

3. The control bank insertion limits are not violated.

4. Axial power distribution procedures, which are given in terms of flux imbalance control and control bank position are observed.

The axial power distribution procedures referred to above are part of the required operating procedures which are followed in normal operation. Briefly they require control of the axial offset at all power levels within a permissible operating band. This minimizes xenon transient effects on the axial power distribution.

Calculations are performed for normal operation of the reactor, including load following maneuvers. Beginning, middle, and end of cycle conditions are included in the calculations. Different histories of operation are assumed prior to calculating the effect of load follow transients on the axial power distribution. These different histories assume base loaded operation and extensive load following. For a given plant and fuel cycle, a finite number of maneuvers are studied to determine the general behavior of the local power density as a function of core elevation.

These cases represent many possible reactor states in the life of one fuel cycle, and they have been chosen as sufficiently definitive of the cycle by comparison with much more exhaustive studies performed on some 20 or 30 different, but typical, plant and fuel cycle combinations. The cases are described in detail in Reference 7 and 30, and they are considered to be necessary and sufficient to generate a local power density limit which, when increased by 5 percent for conservatism, will not be exceeded with a 95-percent confidence level. Many of the points do not approach the limiting envelope. However, they are part of the time histories which lead to the hundreds of shapes which do define the envelope. They also serve as a check that the reactor studied is typical of those more exhaustively studied.

Thus, it is not possible to single out any transient or steady-state condition which defines the most limiting case. It is not even possible to separate out a small number which form an adequate analysis. The process of generating a myriad of shapes is essential to the philosophy that leads to the required level of confidence. A maneuver which provides a limiting case for one reactor fuel cycle (defined as approaching the line of Figure 4.3.2-21) is not necessarily a limiting case for another reactor or fuel cycle with different control bank worths, enrichments, burnup, coefficients, etc. Each shape depends on the detailed history of operation up to that time and on the manner in which the operator conditioned xenon in the days immediately prior to the time at which the power distribution is calculated.

The calculated points are synthesized from axial calculations combined with radial factors appropriate for rodded and unrodded planes in the first cycle. In these calculations, the effects on the unrodded radial peak of xenon redistribution that occurs following the withdrawal of a control bank (or banks) from a rodded region is obtained from two-dimensional X-Y calculations. A 1.03 factor to be applied on the unrodded radial peak was obtained from calculations in which xenon distribution was preconditioned by the presence of control rods and then allowed to redistribute for several hours. A detailed discussion of this effect may be found in Reference 7. The calculated values have been increased by a factor of 1.05 for conservatism and a factor of 1.03 for the engineering factor FE_Q.

The envelope drawn over the calculated max (F_Q(X, Y, Z) x Power) points in Figure 4.3.2-21 represents an upper bound envelope on local power density versus elevation in the core. It should be emphasized that this envelope is a conservative representation of the bounding values of local power density. Expected values are considerably smaller and, in fact, less conservative bounding values may be justified with additional analysis or surveillance requirements. For example, Figure 4.3.2-21 bounds both BOL and EOL conditions but without consideration of radial power distribution flattening with burnup, i.e., both BOL and EOL points presume the same radial peaking factor. Inclusion of the burnup flattening effect would reduce the local power densities corresponding to EOL conditions which may be limiting at the higher core elevations.

Finally, as previously discussed, this upper bound envelope is based on procedures of load follow which require operation within an allowed axial offset range. These procedures are detailed in the SQN Technical Specifications and are followed by relying only upon excore surveillance supplemented by the normal monthly full core map requirement and by computer-based alarms on deviation from the allowed flux imbalance band.

Allowing for fuel densification effects the average linear power is 5.43 kw/ft at 3411 MW(th) and 5.50 kw/ft at 3455 MW(th). When K(z) = 1, the conservative upper bound of the normalized local power density, including uncertainty allowances is F_Q^{RTP} which allows safe operation at 102 percent of 3411 MW(th) and 100.7% of 3455 MW(th).

To determine reactor protection system setpoints, with respect to power distributions, three categories of events are considered, namely rod control equipment malfunctions, operator errors of commission, and operator errors of omission. In evaluating these three categories of events, the core is assumed to be operating within the four constraints described above.

The first category comprises uncontrolled rod withdrawal (with rods moving in the normal bank sequence) for full length banks. Also included are motions of the full-length banks below their insertion limits, which could be caused, for example, by uncontrolled dilution or primary coolant cooldown. Power distributions were calculated throughout these occurrences, assuming short term corrective action. That is, no transient xenon effects were considered to result from the malfunction. The event was assumed to occur from typical normal operating situations, which include normal xenon transients. It was further assumed in determining the power distributions that the total core power level would be limited by reactor trip to below 116.5 percent of 3455 MWt. Since the study is to determine protection limits with respect to power and axial offset, no credit was taken for trip setpoint reduction due to flux imbalance. Results are given in Figure 4.3.2-22 in units of kw/ft. The peak power density which can occur in such events, assuming reactor trip at or below 116.5 percent of 3455 MWt, is less than that required for center-line melt, including uncertainties and densification effects.

The second category, also appearing in Figure 4.3.2-22, assumes that the operator mispositions the full-length rod bank in violation of the insertion limits and creates short-term conditions not included in normal operating conditions.

The third category assumes that the operator fails to take action to correct a flux imbalance violation. The results shown on Figure 4.3.2-23 are F_Q multiplied by 3479 MWt, which includes an allowance for calorimetric error. The peak linear power does not exceed 18 kw/ft,

including the above factors, provided the assumed error in operation does not continue for a period which is long compared to the xenon time constant. The calculation results shown on Figure 4.3.2-23 which are greater than 18 kw/ft result from transients which would proceed without operator intervention for greater than 0.25 hour and would result in violation of the control rod insertion limits in the Technical Specifications. Since the peak kw/ft is below the above limit, no flux imbalance penalties are required for overpower protection. It should be noted that a reactor overpower accident is not assumed to occur coincident with an independent operator error. Additional detailed discussion of these analyses is presented in Reference 7 and 30.

Analyses of possible operating power shapes show that the appropriate hot channel factors F_Q and $F^N_{\Delta H}$ for peak local power density and for DNB analysis at full power are the values given in Table 4.3.2-2 and addressed in the SQN Technical Specifications.

The maximum allowable F_Q can be increased with decreasing power, as shown in the SQN Technical Specifications. Increasing $F^N_{\Delta H}$ with decreasing power is permitted by the DNB protection setpoints and allows radial power shape changes with rod insertion to the insertion limits, as described in Section 4.4.3. The allowance for increased $F^N_{\Delta H}$ permitted is $F^N_{\Delta H} = F^{RTP}_{\Delta H} (1 + PF_{\Delta H}(1-P))$ where $F^{RTP}_{\Delta H}$ and $PF_{\Delta H}$ are set by the Core Operating Limits Report. This becomes a design basis criterion which is used for establishing acceptable control rod patterns and control bank sequencing. Likewise, fuel loading patterns for each cycle are selected with consideration of this design criterion. The worst values of $F^N_{\Delta H}$ for possible rod configurations occurring in normal operation are used in verifying that this criterion is met. Typical radial factors and radial power distributions are shown in Figure 4.3.2-6 through 4.3.2-11. The worst values generally occur when the rods are assumed to be at their insertion limits. Maintenance of axial offset control establishes rod positions which are above the allowed rod insertion limits, thus providing increasing margin to the $F_{\Delta H}$ criterion. Section 3.2 of Reference 8 discusses the determination of $F_{\Delta H}$. These limits are taken as input to the thermal hydraulic design basis, as described in Section 4.4.3.2.1.

When a situation is possible in normal operation which could result in local power densities in excess of those assumed as the precondition for a subsequent hypothetical accident, but which would not itself cause fuel failure, administrative controls and alarms are provided for returning the core to a safe condition. These alarms are described in detail in Chapter 7.0.

4.3.2.2.7 <u>Experimental Verification of Power Distribution Analysis</u>

This subject is discussed in depth in Reference 2. A summary of this report is given here.

In a measurement of peak local power density, F_Q with the moveable detector system described in Subsection 7.7.1 and 4.4.5, the following uncertainties have to be considered.

1. Reproducibility of the measured signal

2. Errors in the calculated relationship between detector current and local flux

3. Errors in the calculated relationship between detector flux and peak rod power some distance from the measurement thimble.

The appropriate allowance for (1) above has been quantified by repetitive measurements made with several inter-calibrated detectors by using the common thimble features of the incore detector system. This system allows more than one detector to access any thimble. Errors in category (2) above are quantified to the extent possible, by using the fluxes measured at one thimble to predict fluxes at another location which is also measured. Local power distribution predictions are verified in critical experiments on arrays of rods with simulated guide thimbles, control rods, burnable poisons, etc. These critical experiments provide quantification of errors of types (2) and (3) above.

Reference 2 describes critical experiments performed at the Westinghouse Reactor Evaluation Center and measurement taken on two Westinghouse plants with incore systems of the same type as used in the plant described herein. The report concludes that the uncertainty associated with the peak nuclear heat flux factor, F_Q is 4.5 percent at the 95 percent confidence level with only 5 percent of the measurements greater than the inferred value. This is the equivalent of a 1.645 sigma limit on a normal distribution and is the uncertainty to be associated with a full core flux map with moveable detectors reduced with a reasonable set of input data incorporating the influence of burnup on the radial power distribution. The uncertainty is usually rounded up to 5 percent.

In comparing measured power distributions (or detector currents) with the calculations for the same operating conditions it is not possible to isolate the detector reproducibility. Thus a comparison between measured and predicted power distributions has to include some measurement error. Such a comparison is given in Figure 4.3.2-24 for one of the maps used in Reference 2. Since the first publication of the report, hundreds of maps have been taken on these and other reactors. The results confirm the adequacy of the 5 percent uncertainty allowance on F_Q.

A similar analysis for the uncertainty in $F_{\Delta H}$ (rod integral power) measurements results in an allowance of 3.65 percent of the equivalent of a 1.645 sigma confidence level. For historical reasons an 8 percent uncertainty factor is allowed in the nuclear design basis; that is, the predicted rod integrals at full power must not exceed the design $F_{\Delta H}$ less 8 percent.

A recent measurement in the second cycle of a 121 assembly, 12-foot core is compared with a simplified one dimensional core average axial calculation in Figure 4.3.2-25. This calculation does not give explicit representation to the fuel grids.

The accumulated data on power distributions in actual operation is basically of three types:

1. Much of the data is obtained in steady state operation at constant power in the normal operating configuration;

2. Data with unusual values of axial offset are obtained as part of the excore detector calibration exercise;

3. Special tests have been performed in load follow and other transient xenon conditions which have yielded useful information on power distributions.

These data are presented in detail in Reference 6. Figure 4.3.2-26 contains a summary of measured values of F_Q as a function of axial offset for five plants from that report.

4.3.2.2.8 Testing

A very extensive series of physics tests is performed on first cores. These tests and the criteria for satisfactory results are described in detail in Chapter 14. Since not all limiting situations can be created at beginning of life, the main purpose of the tests is to provide a check on the calculational methods used in the predictions for the conditions of the test. Tests performed at the beginning of each reload cycle are limited to verification of the selected safety-related parameters of the reload design.

4.3.2.2.9 Monitoring Instrumentation

The adequacy of instrument numbers, spatial deployment, required correlations between readings and peaking factors, calibration and errors are described in Reference 2, 6 and 8. The relevant conclusions are summarized in Sections 4.3.2.2.7 and 4.4.5.

Provided the limitations given in Subparagraph 4.3.2.2.6 on rod insertion and flux imbalance are observed, the excore detector system provides adequate online monitoring of power distributions. Further details of specific limits on the observed rod positions and flux are given in the SQN Technical Specifications, with a discussion of their bases.

Limits for alarms, reactor trip, etc. are given in the Technical Specification. Descriptions of the systems provided are given in Section 7.7.

4.3.2.3 Reactivity Coefficients

The kinetic characteristics of the reactor core determine the response of the core to changing plant conditions or to operator adjustments made during normal operation, as well as the core response during abnormal or accidental transients. These kinetic characteristics are quantified in reactivity coefficients. The reactivity coefficients reflect the changes in the neutron multiplication due to varying plant conditions such as power, moderator or fuel temperatures, or less significantly due to a change in pressure or void conditions. Since reactivity coefficients change during the life of the core, ranges of coefficients are employed in transient analysis to determine the response of the plant throughout life. The results of such simulations and the reactivity coefficients used are presented in Chapter 15. The reactivity coefficients are calculated on a core wise basis by radial and axial diffusion theory methods. The effect of radial and axial power distribution on core average reactivity coefficients is implicit in those calculations and is not significant under normal operating conditions. For example, a skewed xenon distribution which results in changing axial off-set by 5 percent changes the moderator and Doppler temperature coefficients by less than 0.01 pcm/°F and 0.03 pcm/°F, respectively. An artificially skewed xenon distribution which results in changing the radial $F^N_{\Delta H}$ by 3 percent changes the moderator and Doppler temperature coefficients by less than 0.03 pcm/°F and

0.001 pcm/°F, respectively. The spatial effects are accentuated in some transient conditions, for example, in the postulated rupture of the main steam line and rupture of a rod cluster control assembly mechanism housing as described in Sections 15.4.2.1 and 15.4.6.

The analytical methods and calculational models used in calculating the reactivity coefficients are given in Subsection 4.3.3. These models have been confirmed through extensive testing of more than thirty cores similar to Sequoyah; results of these tests are discussed in Subsection 4.3.3.

Quantitative information for calculated reactivity coefficients, including fuel-Doppler coefficient, moderator coefficients (density, temperature, pressure, void) and power coefficient is given in the following sections.

4.3.2.3.1 Fuel Temperature (Doppler) Coefficient

The fuel temperature (Doppler) coefficient is defined as the change in reactivity per degree change in effective fuel temperature and is primarily a measure of the Doppler broadening of U-238 and Pu-240 resonance absorption peaks. Doppler broadening of other isotopes such as U-236, Np-237 etc. are also considered but their contributions to the Doppler effect is small. Lead test assemblies with fuel pellets made from highly enriched reprocessed uranium blended down with natural uranium have elevated U-236 concentrations, which are evaluated by the BAW-2328 Report of July 1998. An increase in fuel temperature increases the effective resonance absorption cross sections of the fuel and produces a corresponding reduction in reactivity.

The fuel temperature coefficient is calculated by performing two-group X-Y calculations using an updated version of the TURTLE code (Reference 9), the PALADON code (Reference 10), or the ANC code (Reference 31). The moderator temperature is held constant and the power level is varied. Spatial variation of fuel temperature is taken into account by calculating the effective fuel temperature as a function of power density as discussed in Paragraph 4.3.3.1.

A typical Doppler temperature coefficient is shown in Figure 4.3.2-27 as a function of the effective fuel temperature (at Beginning-of-life and End-of-Life conditions). The effective fuel temperature is lower than the volume averaged fuel temperature since the neutron flux distribution is non-uniform through the pellet and gives preferential weight to the surface temperature. The Doppler-only contribution to the power coefficient, defined later, is shown in Figure 4.3.2-28 as a function of relative core power. The integral of the differential curve on Figure 4.3.2-28 is the Doppler contribution to the power defect and is shown in Figure 4.3.2-29 as a function of relative power. The Doppler coefficient becomes more negative as a function of life as the Pu-240 content increases, thus increasing the Pu-240 resonance absorption but less negative as the fuel temperature changes with burnup as described in Paragraph 4.3.3.1. The upper and lower limits of Doppler coefficient used in accident analyses are given in Chapter 15.

4.3.2.3.2 Moderator Coefficients

The moderator coefficient is a measure of the change in reactivity due to a change in specific coolant parameters such as density, temperature, pressure or void. The coefficients so obtained are moderator density, temperature, pressure and void coefficients.

Moderator Density and Temperature Coefficients

The moderator temperature coefficient is defined as the change in reactivity per degree change in the moderator temperature. Generally, the effect of the changes in moderator density as well as the temperature are considered together. A decrease in moderator density means less moderation which results in a negative moderator temperature coefficient. An increase in coolant temperature, keeping the density constant, leads to a hardened neutron spectrum and results in an increase in resonance absorption in U-238, Pu-240 and other isotopes. The hardened spectrum also causes a decrease in the fission to capture ratio in U-235 and Pu-239. Both of these effects make the moderator temperature coefficient more negative. Since water density changes more rapidly with temperature as temperature increases, the moderator temperature coefficient becomes more negative with increasing temperature.

The soluble boron used in the reactor as a means of reactivity control also has an effect on moderator density coefficient since the soluble boron poison density as well as the water density is decreased when the coolant temperature rises. An increase in the soluble poison concentration introduces a positive component in the moderator coefficient. If the concentration of soluble poison is large enough, the net value of the coefficient may be positive. With the burnable poison rods present, however, the initial hot boron concentration is sufficiently low that the moderator temperature coefficient is negative at operating temperatures. The effect of control rods is to make the moderator coefficient more negative by reducing the required soluble boron concentration and by increasing the "leakage" of the core.

With burnup, the moderator coefficient becomes more negative primarily as a result of boric acid dilution but also to a significant extent from the effects of the buildup of plutonium and fission products.

The moderator coefficient is calculated for the various plant conditions discussed above by performing two-group X-Y calculations, varying the moderator temperature (and density) by about ± 5°F about each of the mean temperatures. The moderator coefficient is shown as a function of core temperature and boron concentration for a typical unrodded and rodded core in Figures 4.3.2-30 through 4.3.2-32. The temperature range covered is from cold (68°F) to about 600°F. The contribution due to Doppler coefficient (because of change in moderator temperature) has been subtracted from these results. Figure 4.3.2-33 shows the hot, full power moderator temperature coefficient plotted as a function of first cycle lifetime for the just critical boron concentration condition based on the design boron letdown condition.

The moderator coefficients presented here are calculated on a core wise basis, since they are used to describe the core behavior in normal and accident situations when the moderator temperature changes can be considered to affect the whole core.

Moderator Pressure Coefficient

The moderator pressure coefficient relates the change in moderator density, resulting from a reactor coolant pressure change, to the corresponding effect on neutron production. This coefficient is of much less significance in comparison with the moderator temperature coefficient. A change of 50 psi in pressure has approximately the same effect on reactivity (in magnitude but opposite in sign) as a half-degree change in moderator temperature. This

coefficient can be determined from the moderator temperature coefficient by relating change in pressure to the corresponding change in density. The moderator pressure coefficient is negative over a portion of the moderator temperature range at beginning of life (-0.004 pcm/psi, BOL) but is always positive at operating conditions and becomes more positive during life (+ 0.3 pcm/psi, EOL).

Moderator Void Coefficient

The moderator void coefficient relates the change in neutron multiplication to the presence of voids in the moderator. In a PWR this coefficient is not very significant because of the low void content in the coolant. The core void content is less than one-half of one percent and is due to local or statistical boiling. The void coefficient varies from 50 pcm/percent void at BOL and at low temperatures to -250 pcm/percent void at EOL and at operating temperatures. The negative void coefficient at operating temperature becomes more negative with fuel burnup.

4.3.2.3.3 Power Coefficient

The combined effect of moderator temperature and fuel temperature change as the core power level changes is called the total power coefficient and is expressed in terms of reactivity change per percent power change. The power coefficient at BOL and EOL conditions is given in Figure 4.3.2-34.

It becomes more negative with burnup, reflecting the combined effect of moderator and fuel temperature coefficients with burnup. The power defect (integral reactivity effect) at BOL and EOL is given in Figure 4.3.2-35.

4.3.2.3.4 Comparison of Calculated and Experimental Reactivity Coefficients

Subsection 4.3.3 describes the comparison of calculated and experimental reactivity coefficients in detail. Based on the data presented there, the accuracy of the current analytical model is:

± 0.2 percent $\Delta\rho$ for Doppler and power defect
± 2 pcm/°F for the moderator coefficient

Experimental evaluation of the calculated coefficients are done during the physics startup tests described in Chapter 14.

4.3.2.3.5 Reactivity Coefficients Used in Transient Analysis

Table 4.3.2-2 gives the representative ranges for the reactivity coefficients used in transient analysis. The exact values of the coefficient used in the analysis depend on whether the transient of interest is examined at the beginning or end of life, whether most negative or the most positive (least negative) coefficients are appropriate, and whether spatial nonuniformity must be considered in the analysis. Conservative values of coefficients, considering various aspects of analysis are used in the transient analysis. This is described in Chapter 15.

The values listed in Table 4.3.2-2 and illustrated in Figures 4.3.2-27 through 4.3.2-35 are typical best estimate values calculated for a first cycle. The coefficients appropriate for use in subsequent cycles depends on the core's operating history, the number and enrichment of fresh

fuel assemblies, the loading pattern of burned and fresh fuel, the number and location of any burnable absorbers, etc. The need for a reevaluation of any accident in a subsequent cycle is contingent upon whether or not the coefficients for that cycle fall within the identified range used in the analysis presented in Chapter 15. Control rod requirements are given in Table 4.3.2-3 for the core described and for a hypothetical equilibrium cycle since these are markedly different. These latter numbers are provided for information only since refueling specifications for subsequent cycles have not been established.

4.3.2.4 Control Requirements

To ensure the shutdown margin stated in the SQN Technical Specifications under conditions where a cooldown to ambient temperature is required, concentrated soluble boron is added to the coolant. Boron concentrations for several core conditions are listed in Table 4.3.2-2. For all core conditions, including refueling, the boron concentration is well below the solubility limit. The rod cluster control assemblies are employed to bring the reactor to the hot shutdown condition. The minimum required shutdown margin is given in the SQN Technical Specifications.

The ability to accomplish the shutdown for hot conditions is demonstrated in Table 4.3.2-3 comparing the difference between the Rod Cluster Control Assembly reactivity available with an allowance for the worst stuck rod with that required for control and protection purposes. The shutdown margin includes an allowance of 7 percent for analytic uncertainties (Reference 34). The largest reactivity control requirement appears at the end-of-life (EOL) when the moderator temperature coefficient reaches its peak negative value as reflected in the larger power defect.

The control rods are required to provide sufficient reactivity to account for the power defect from full power to zero power and to provide the required shutdown margin. The reactivity addition resulting from power reduction consists of contributions from Doppler, moderator temperature, flux redistribution, and reduction in void content, as discussed below.

4.3.2.4.1 Doppler

The Doppler effect arises from the broadening of U-238 and Pu-240 resonance peaks with an increase in effective pellet temperature. This effect is most noticeable over the range of zero power to full power due to the large pellet temperature increase with power generation.

4.3.2.4.2 Variable Average Moderator Temperature

When the core is shutdown to the hot zero power condition, the average moderator temperature changes from the equilibrium full load value determined by the steam generator and turbine characteristics (steam pressure, heat transfer, tube fouling, etc.) to the equilibrium no load value, which is based on the steam generator shell side design pressure. The design change in temperature is conservatively increased by 4°F to account for the control dead band and measurement errors.

Since the moderator coefficient is negative, there is a reactivity addition with power reduction. The moderator coefficient becomes more negative as the fuel depletes because the boron concentration is reduced. This effect is the major contributor to the increased requirement at end of life.

4.3.2.4.3 Redistribution

During full power operation, the coolant density decreases with core height, and this, together with partial insertion of control rods, results in less fuel depletion near the top of the core. Under steady state conditions, the relative power distribution will be slightly asymmetric towards the bottom of the core. On the other hand, at hot zero power conditions, the coolant density is uniform up the core, and there is no flattening due to Doppler. The result will be a flux distribution which at zero power can be skewed toward the top of the core. The reactivity insertion due to the skewed distribution is calculated with an allowance for the most adverse effects of xenon distribution.

4.3.2.4.4 Void Content

A small void content in the core is due to nucleate boiling at full power. The void collapse coincident with power reduction makes a small reactivity contribution.

4.3.2.4.5 Rod Insertion Allowance

At full power, the control bank is operated within a prescribed band of travel to compensate for small periodic changes in boron concentration, changes in temperature and very small changes in the xenon concentration not compensated for by a change in boron concentration. When the control bank reaches either limit of this band, a change in boron concentration is required to compensate for additional reactivity changes. Since the insertion limit is set by a rod travel limit, a conservatively high calculation of the inserted worth is made which exceeds the normally inserted reactivity.

4.3.2.4.6 Burnup

Excess reactivity of 10 percent $\Delta\rho$ to 25 percent $\Delta\rho$ (hot) is installed at the beginning of each cycle to provide sufficient reactivity to compensate for fuel depletion and fission products throughout the cycle. This reactivity is controlled by the addition of soluble boron to the coolant and by burnable poisons. The soluble boron concentration for several core configurations, the unit boron worth, and burnable absorber worth are given in Tables 4.3.2-1 and 4.3.2-2. Since the excess reactivity for burnup is controlled by soluble boron and/or burnable absorbers, it is not included in control rod requirements.

4.3.2.4.7 Xenon and Samarium Poisoning

Changes in xenon and samarium concentrations in the core occur at a sufficiently slow rate, even following rapid power level changes, that the resulting reactivity change is controlled by changing the soluble boron concentration.

4.3.2.4.8 pH Effects

Changes in reactivity due to a change in coolant pH, if any, are sufficiently small in magnitude and occur slowly enough to be controlled by the boron system. Further details are available in Reference 11.

4.3.2.5 Control

Core reactivity is controlled by means of a chemical poison dissolved in the coolant, Rod Cluster Control Assemblies, and burnable absorbers as described below.

4.3.2.5.1 Chemical Poison

Boron in solution as boric acid is used to control relatively slow reactivity changes associated with:

1. The moderator temperature defect in going from cold shutdown at ambient temperature to the hot operating temperature at zero power

2. The transient xenon and samarium poisoning, such as that following power changes or changes in Rod Cluster Control Assembly position

3. The excess reactivity required to compensate for the effects of fissile inventory depletion and buildup of long-life fission products

4. The burnable absorbers depletion

The boron concentrations for various core conditions are presented in Table 4.3.2-2.

4.3.2.5.2 Rod Cluster Control Assemblies

The number of Rod Cluster Control Assemblies is shown in Table 4.3.2-1. The Rod Cluster Control Assemblies are used for shutdown and control purposes to offset fast reactivity changes associated with:

1. The required shutdown margin in the hot zero power, stuck rod condition

2. The reactivity compensation as a result of an increase in power above hot zero power (power defect, including Doppler, and moderator reactivity changes)

3. Unprogrammed fluctuations in boron concentration, coolant temperatures, or xenon concentration (with rods not exceeding the allowable rod insertion limits)

4. Reactivity ramp rates resulting from load changes.

The allowed full length control bank reactivity insertion is limited at full power to maintain shutdown capability. As the power level is reduced, control rod reactivity requirements are also reduced and more rod insertion is allowed. The control bank position is monitored and the operator is notified by an alarm if the limit is approached. The determination of the insertion limit uses conservative xenon distributions and axial power shapes. In addition, the Rod Cluster Control Assembly withdrawal pattern determined from these analyses is used in determining power distribution factors and in determining the maximum worth of an inserted Rod Cluster Control Assembly ejection accident. For further discussion, refer to the Technical Specifications on Rod Insertion Limits.

Power distribution, Rod Ejection and Rod Misalignment analyses are based on the arrangement of the shutdown and control groups of the Rod Cluster Control Assemblies shown in Figure 4.3.2-36. All shutdown Rod Cluster Control Assemblies are withdrawn before withdrawal of the control banks is initiated. In going from zero to 100 percent power, control banks B, C and D are withdrawn sequentially. The limits of rod positions and further discussion on the basis for rod insertion limits are provided in the SQN Technical Specifications.

To accommodate the use of mixed oxide fuels in future reloads, four additional control rod drive mechanisms were included in the original design, identical to the other full length drive mechanisms, increasing the total number of full length drive mechanisms from 53 to 57. These additional drive mechanisms are located at postings E-5, E-11, L-5, and L-11. To provide additional shut down margin for a proposed tritium production core, rod cluster control assemblies were relocated to the four spare locations. The drive rod and rod cluster control assemblies were removed from the mechanisms located at positions D-2, P-4, B-12, and M-14.

Since no control rods are presently connected to the spare drive mechanisms there are no nuclear effects associated with these drives. For the spare guide tubes, a cover or plug on the top of each guide tube limits the flow past the upper support plate via the spare guide tubes.

4.3.2.5.3 Burnable Absorbers

The burnable absorbers provide partial control of the excess reactivity available during the cycle. In doing so, the absorbers prevent the moderator temperature coefficient from being positive at normal operating conditions. They perform this function by reducing the requirement for soluble poison in the moderator at the beginning of the first fuel cycle as previously described. The first cycle fixed burnable absorber rod pattern in the core together with the number of rods per assembly is shown in Figure 4.3.2-5, while the arrangements within an assembly are displayed in Figure 4.3.2-4. The reactivity worth of these rods is shown in Table 4.3.2-1. The boron in the rods is depleted with burnup but at a sufficiently slow rate so that the resulting critical concentration of the soluble boron is such that the moderator temperature coefficient remains negative at all times for power operating conditions.

4.3.2.5.4 Peak Xenon Startup

Compensation for the peak xenon buildup is accomplished using the boron control system. Startup from the peak xenon condition is accomplished with a combination of rod motion and boron dilution. The boron dilution may be made at any time, including during the shutdown period, provided the shutdown margin is maintained.

4.3.2.5.5 Load Follow Control and Xenon Control

During load follow maneuvers, power changes are accomplished using control rod motion and dilution or boration by the boron system as required. Control rod motion is limited by the control rod insertion

limits on full length rods as provided in the Technical Specifications and discussed in Subparagraphs 4.3.2.5.2. The power distribution is maintained within acceptable limits through the location of the full-length rod bank. Reactivity changes due to the changing xenon concentration can be controlled by rod motion and/or changes in the soluble boron concentration.

4.3.2.5.6 Burnup

Control of the excess reactivity for burnup is accomplished using soluble boron and/or burnable absorbers. The boron concentration must be limited during operating conditions to ensure that the moderator temperature coefficient is negative. Sufficient burnable absorbers are installed at the beginning of a cycle to give the desired cycle lifetime without exceeding the boron concentration limit. The practical minimum boron concentration is 10 ppm.

4.3.2.6 Control Rod Patterns And Reactivity Worth

The full length Rod Cluster Control Assemblies are designated by function as the control groups and the shutdown groups. The terms "group" and "bank" are used synonymously throughout this report to describe a particular grouping of control assemblies. The Rod Cluster Control Assembly Pattern is displayed in Figure 4.3.2-36 and was changed to provide additional shut down margin for a proposed tritium production core. The control banks are labeled A, B, C and D and the shutdown banks are labeled SA, SB, SC and SD. Each bank, although operated and controlled as a unit, is comprised of two sub-groups. The axial position of the Rod Cluster Control Assemblies may be manually or automatically controlled. The Rod Cluster Control Assemblies are all dropped into the core following actuation of reactor trip signals.

Two criteria have been employed for selection of the control groups. First the total reactivity worth must be adequate to meet the requirements specified in Table 4.3.2-3. Second, in view of the fact that these rods may be partially inserted at power operation, the total power peaking factor should be low enough to ensure that the power capability requirements are met. Analyses indicate that the first requirement can be met either by a single group or by two or more banks whose total worth equals at least the required amount. The axial power shape would be more peaked following movement of a single group of rods worth three to four percent $\Delta\rho$; therefore, four banks (described as A, B, C, and D in Figure 4.3.2-36) have been selected.

The position of control banks for criticality under any reactor condition is determined by the concentration of boron in the coolant. On an approach to criticality, boron is adjusted to ensure that criticality will be achieved with control rods above the insertion limit set by shutdown and other considerations (See the Technical Specifications). Early in the cycle there may also be a withdrawal limit at low power to maintain a negative moderator temperature coefficient. Usual practice is to adjust boron to ensure that the rod position lies within the so-called maneuvering band.

Ejected Rod worths are given in Subsection 15.4.6 for several different conditions.

Allowable deviations due to misaligned control rods are addressed in the SQN Technical Specifications.

A representative calculation for two banks of control rods simultaneously withdrawn (Rod Withdrawal accident) is given in Figure 4.3.2-37.

Calculation of control rod reactivity worth versus time following reactor trip involves both control rod velocity and differential reactivity worth. The rod position versus time of travel after rod release is given in Figure 4.3.2-38. For nuclear design purposes, the reactivity worth versus rod position is calculated by a series of steady-state calculations at various control and rod positions, assuming all rods out of the core as the initial position in order to minimize the initial reactivity insertion rate. To be conservative, the rod of the highest worth is assumed stuck out of the core, and the flux distribution (and thus reactivity importance) is assumed to be skewed to the bottom of the core. The results of the calculations is shown in Figure 4.3.2-39.

The shutdown groups provide additional negative reactivity to ensure an adequate shutdown margin. Shutdown margin is defined as the amount by which the core would be subcritical at hot shutdown if all rod cluster control assemblies are tripped, but assuming that the highest worth assembly remains fully withdrawn and no changes in xenon or boron take place. The loss of control rod worth due to the material irradiation is negligible, since only bank D may be in the core under normal operating conditions (near full power).

The values given in Table 4.3.2-3 show that the available reactivity in withdrawn rod cluster control assemblies provides the design bases minimum shutdown margin, allowing for the highest worth cluster to be at its fully withdrawn position. An allowance for the uncertainty in the calculated worth of N-1 rods is made before determination of the shutdown margin.

4.3.2.7 Criticality of Fuel Assemblies

Criticality of fuel assemblies outside of the reactor is precluded by adequate design of fuel transfer and fuel storage facilities and by administrative controls. This section identifies those criteria important to criticality safety analyses.

New Fuel Storage

New fuel is normally stored dry in the new fuel storage vault. The infinite array reactivity of the new fuel racks was calculated (Reference 33) by using the AMPX system of codes for cross-section generation and KENO-IV for reactivity determination. The fuel is assumed to be fresh and unirradiated with an enrichment of 5.0 weight percent of U-235 for standard fuel. This analysis is still valid for the VANTAGE 5H (V5H) fuel, since the design differences between standard and V5H fuel do not affect this analysis. Similarly, other fuel designs would be acceptable if design differences are small. Mechanical uncertainties and biases due to mechanical tolerances during construction were treated by using either the "worst case" conditions or by performing sensitivity studies to determine their effort.

The calculation method and cross-section values were verified by comparison with a set of critical experiments analyzed by the same method. This benchmarking data was sufficiently diverse to establish that the method bias and uncertainty will apply to rack conditions which include strong neutron absorbers, large water gaps, low moderator densities, and dry storage.

The results of these experiments yielded a method bias of 0.0083 Δk. The most conservative k_{eff} under normal conditions was calculated using full density water as 0.9416, meeting the criticality criteria to maintain k_{eff} at or below 0.95. This k_{eff} included the method bias and 95/95 uncertainties in the method bias and the maximum k_{eff}. In addition, this most conservative case combined the effects of worst-case mechanical tolerances, material thickness tolerances, and conservatively accounting for enrichment variability (with enrichment assumed to be 5.05 wt%).

A low density, optimum moderation case has been determined to be the worst-case accident scenario for these new fuel storage racks. The model used in the full density case was used to model the low density case. A water density of 0.060 gm/cm3 was also used in this analysis. The result was a k_{eff} of 0.9660, including all biases and uncertainties, meeting the criticality criteria for accident conditions to maintain k_{eff} at or below 0.98.

For other accident conditions, the double contingency principle of ANSI N16.1-1975 is applied. In applying this principle, one is not required to assume two independent, unlikely, concurrent events to preclude criticality. For all other accident conditions, the absence of a moderator in the new fuel storage racks is a realistic initial condition.

Thus, for normal operations, using the method described above including all the biases and uncertainties mentioned, the k_{eff} of the new fuel storage racks is determined to be <0.95. This meets the criteria stated in Section 4.3.1.5.

<u>Spent Fuel Storage - Wet</u>

Each storage cell has an internal envelope dimension of 8.75-inches square with 0.060-inch thick stainless steel walls. A single Boral absorber panel is positioned between the walls of adjacent cells within the modules.

Peripheral cells with a 0.0235-inch stainless steel sheathing on the outside supporting the Boral panel. The fuel storage cells are located on a nominal lattice spacing of 8.97 ± 0.04 inches. The Boral absorber has a thickness of 0.102 ± 0.005 inch and a nominal B-10 areal density of 0.0324 g/cm^2 (0.030 g B-10/cm^2 minimum). The design basis fuel assembly is a 17 x 17 Westinghouse Vantage-5H assembly containing UO_2 at a maximum initial enrichment of 4.95 ± 0.05 wt% U-235 by weight. (If fuel assemblies with natural UO_2 blankets are used, the design basis enrichment is that of the central enriched zone.)

The spent fuel racks have been analyzed in accordance with the Holtec International methodology contained in Holtec Report HI - 992349 (Ref. 38). This methodology ensures that the spent fuel rack multiplication factor, k_{eff} is less than or equal to 0.95, as recommended by the NRC guidance contained in NRC Letter to All Power Reactor Licensees from B.K. Grimes, “OT Position for Review and Acceptance of Spent Fuel Storage and Handling Applications,” April 14, 1978 and USNRC Internal Memorandum from L. Kopp, “Guidance On The Regulatory Requirements For Criticality Analysis Of Fuel Storage At Light-Water Reactor Power Plants,” August 19, 1998 (Refs. 39 & 40). The codes, methods, and techniques contained in the methodology are used to satisfy the k_{eff} criterion. The spent fuel storage racks are analyzed to allow storage of Westinghouse 17 X 17 V5H fuel assemblies and other fuel assemblies, with enrichments up to 4.95%±0.05% w/o U-235 utilizing credit for checkerboard configurations, burnup, integral fuel burnable absorbers, gadolinia absorbers, cooling time, and soluble boron, to ensure that k_{eff} is maintained $\leq$ 0.95, including uncertainties, tolerances, and accident

conditions. In addition, the spent fuel pool k_{eff} is maintained < 1.0 including uncertainties and tolerances on a 95/95 basis without any soluble boron. Calculations have been performed to evaluate the reactivity of fuel used at SQN. The results show that Westinghouse 17 X 17 exhibits higher reactivity, thereby bounding all fuel utilized and stored in the spent fuel pool at SQN.

In the high density Spent Fuel Storage Rack design (Refs. 38 and 41), the spent fuel storage pool is divided into three separate and distinct regions which, for the purpose of criticality considerations, are considered as separate pools. Region 1 is designed to accommodate new fuel with a maximum enrichment of 4.95 ± 0.05 wt% U-235, or spent fuel regardless of the discharge fuel burnup in a 1-in-4 checkerboard arrangement of 1 fresh assembly with 3 spent fuel assemblies with specified enrichment, burnup and cooling times. Region 2 is designed to accommodate fuel which have 4.95 ± 0.05 wt% initial enrichment burned to at least 30.27 MWD/KgU (assembly average), or fuel of other enrichment with a burnup yielding an equivalent reactivity in the fuel racks. Region 3 is designed to accommodate fuel of 4.95 ± 0.05 wt% initial enrichment or fuel assemblies of any lower reactivity in a 2-out-of-4 checkerboard arrangement with water-filled cells.

The water in the spent fuel storage pool normally contains soluble boron, which results in large subcriticality margins under actual operating conditions. However, the NRC guidelines, based upon the accident condition in which all soluble poison is assumed to have been lost, specify that the limiting k_{eff} of < 1.0 be evaluated in the absence of soluble boron. Hence, the design of all regions is based on the use of unborated water, which maintains each region in a subcritical condition during normal operation with the regions fully loaded. The double contingency principle discussed in ANSI N-16.1-1975 (Ref. 42) and the April 1978 NRC letter allows credit for soluble boron under other abnormal or accident conditions, since only a single accident need be considered at one time. For example, the most severe accident scenario is associated with the accidental mishandling of a fresh fuel assembly face adjacent to a fresh fuel assembly of Region 3. This could potentially increase the criticality of Region 3. To mitigate these postulated criticality related accidents, boron is dissolved in the pool water. The soluble boron concentration required to maintain $k_{eff} \leq 0.95$ under normal conditions is 300 ppm and 700 ppm under the most severe postulated fuel mis-location accident. Safe operation of the spent fuel storage racks may therefore be achieved by controlling the location of each assembly in accordance with Technical Specifications. During fuel movement boron concentration is periodically verified to be within limit.

Most accident conditions do not result in an increase in the reactivity of any one of the three regions. Examples of these accident conditions are the loss of cooling and the dropping of a fuel assembly on the top of the rack. However, accidents can be postulated that could increase the reactivity. This increase in reactivity is unacceptable with unborated water in the storage pool. Thus, for these accident occurrences, the presence of soluble boron in the storage pool prevents criticality in all regions. The most limiting postulated accident with respect to the storage configurations assumed in the spent fuel rack criticality analysis is the misplacement of a nominal 4.95±0.05 wt% U-235 fuel assembly into an empty storage cell location in the Region 3 checkerboard storage arrangement. The amount of soluble boron required to maintain k_{eff} less than or equal to 0.95 due to this fuel misload accident is 700 ppm (Ref. 38).

A spent fuel boron dilution analysis was performed to ensure that sufficient time is available to detect and mitigate dilution of the spent fuel pool prior to exceeding the k_{eff} design basis limit of 0.95 (Ref. 43). The spent fuel pool boron dilution analysis concluded that an inadvertent or unplanned event that would result in a dilution of the spent fuel pool boron concentration from 2000 ppm to 700 ppm is not a credible event.

The concentration of dissolved boron in the spent fuel storage pool satisfies Criterion 2 of the NRC Policy Statement.

The spent fuel storage pool boron concentration is required to be ≥ 2000 ppm. The specified concentration of dissolved boron in the spent fuel storage pool preserves the assumptions used in the analyses of the potential critical accident scenarios as described in Reference 44. This concentration of dissolved boron is the minimum required concentration for fuel assembly storage and movement within the spent fuel storage pool.

4.3.2.8 Stability

4.3.2.8.1 Introduction

The stability of the PWR cores against xenon-induced spatial oscillations and the control of such transients are discussed extensively in References 6, 12, 13 and 14. A summary of these reports is given in the following discussion, and the design bases are given in Paragraph 4.3.1.6.

In a large reactor core, xenon-induced oscillations can take place with no corresponding change in the total power of the core. The oscillation may be caused by a power shift in the core which rapidly occurs by comparison with the xenon-iodine time constants. Such a power shift occurs in the axial direction when a plant load change is made by control rod motion and results in a change in the moderator density and fuel temperature distributions. Such a power shift could occur in the diametral plane of the core as a result of abnormal control action.

Due to the negative power coefficient of reactivity, PWR cores are inherently stable to oscillations in total power. Protection against total power instabilities is provided by the Control and Protection System as described in Section 7.7. Hence, the discussion on the core stability is limited here to xenon-induced spatial oscillations.

4.3.2.8.2 Stability Index

Power distributions, either in the axial direction or in the X-Y plane, can undergo oscillations due to perturbations introduced in the equilibrium distributions without changing the total core power. The xenon-induced oscillations are essentially limited to the first flux overtones in the current PWR's, and the stability of the core against xenon-induced oscillations can be determined in terms of the eigenvalues of the first flux overtones. Writing the eigenvalue ζ of the first flux harmonic as

$$\zeta = b + ic, \qquad (4.3\text{-}1)$$

then b is defined as the stability index and $T = 2\pi/c$ as the oscillation period of the first harmonic. The time-dependence of the first harmonic $\delta\Phi$ in the power distribution can now be represented as

$$\delta\Phi(t) = A\, e^{\zeta t} = a e^{bt} \cos ct. \qquad (4.3\text{-}2)$$

where A and a are constants. The stability index can also be obtained approximately by:

$$b = \frac{1}{T} \ln \frac{A_{n+1}}{A_n} \qquad (4.3-3)$$

where A_n, A_n+1 are the successive peak amplitudes of the oscillation and T is the time period between the successive peaks.

4.3.2.8.3 Prediction Of The Core Stability

The stability of the core described herein (i.e., with 17 x 17 fuel assemblies) against xenon-induced spatial oscillations is expected to be equal to or better than that of earlier designs. The prediction is based on a comparison of the parameters which are significant in determining the stability of the core against the xenon-induced oscillations, namely (1) the overall core size is unchanged and spatial power distributions will be similar, (2) the moderator temperature coefficient is expected to be similar to or slightly more negative, and (3) the Doppler coefficient of reactivity is expected to be equal to or slightly more negative at full power.

Analysis of both the axial and X-Y xenon transient tests, discussed in Subparagraph 4.3.2.8.5, shows that the calculational model is adequate for the prediction of core stability.

4.3.2.8.4 Stability Measurements

1. Axial Measurements

   Two axial xenon transient tests conducted in a PWR with a core height of 12 feet and 121 fuel assemblies is reported in Reference 15, and are briefly discussed here. The tests were performed at approximately 10 percent and 50 percent of cycle life.

   Both a free-running oscillation test and a controlled test were performed during the first test. The second test at mid-cycle consisted of a free-running oscillation test only. In each of the free-running oscillation tests, a perturbation was introduced to the equilibrium power distribution through an impulse motion of the Control Bank D and the subsequent oscillation was monitored to measure the stability index and the oscillation period. In the controlled test conducted early in the cycle, the part-length (P/L) rods were used to follow the oscillations to maintain an axial off-set (AO) within the prescribed limits. The AO of power was obtained from the excore ion chamber readings (which had been calibrated against the incore flux maps) as a function of time for both free-running tests as shown in Figure 4.3.2-41.

   The total core power was maintained constant during these spatial xenon tests, and the stability index and the oscillation period were obtained from a least-square fit of the AO data in the form of Equation (4.3-2). The AO of power is the quantity that properly represents the axial stability in the sense that it essentially eliminates any contribution from even order harmonics including the fundamental mode. The conclusions of the tests are:

   a. The core was stable against induced axial xenon transients both at the core average burnups of 1550 MWD/MTU and 7700 MWD/MTU. The measured stability indices are -0.041 hr^{-1} for the first test (Curve 1 of Figure 4.3.2-41) and -0.014 hr^{-1} for the second test (Curve 2 of Figure 4.3.2-41). The corresponding oscillation periods are 32.4 hrs. and 27.2 hrs., respectively.

b. The reactor core becomes less stable as fuel burnup progresses and the axial stability index was essentially zero at 12,000 MWD/MTU.

2. Measurements in the X-Y Plane

Two X-Y xenon oscillation tests were performed at a PWR plant with a core height of 12 feet and 157 fuel assemblies. The first test was conducted at a core average burnup of 1540 MWD/MTU and the second at a core average burnup of 12,900 MWD/MTU. Both of the X-Y xenon tests show that the core was stable in the X-Y plane at both burnups. The second test shows that the core became more stable as the fuel burnup increased and all Westinghouse PWR's with 121 and 157 assemblies are expected to be stable throughout their burnup cycles. The results of these tests are applicable to the 193 assembly SQN cores as discussed in Section 4.3.2.8.3.

In each of the two X-Y tests, a perturbation was introduced to the equilibrium power distribution through an impulse motion of one RCC unit located along the diagonal axis. Following the perturbation, the uncontrolled oscillation was monitored using the moveable detector and thermocouple system and the excore power range detectors. The quadrant tilt difference (QTD) is the quantity that properly represents the diametral oscillation in the X-Y plane of the reactor core in that the differences of the quadrant average powers over two symmetrically opposite quadrants essentially eliminates the contribution to the oscillation from the azimuthal mode. The QTD data were fitted in the form of Equation (4.3-2) through a least-square method. A stability index of -0.076 hr^{-1} with a period of 29.6 hours was obtained from the thermocouple data shown in Figure 4.3.2-42.

It was observed in the second X-Y xenon test that the PWR core with 157 fuel assemblies had become more stable due to an increased fuel depletion and the stability index was not determined.

4.3.2.8.5 Comparison of Calculations With Measurements

The analysis of the axial xenon transient tests was performed in an axial slab geometry using a flux synthesis technique. The direct simulation of the AO data was carried out using the PANDA (Reference 16) code. The analysis of the X-Y xenon transient tests was performed in an X-Y geometry using a modified TURTLE (Reference 9) code. Both the PANDA and TURTLE codes solve the two-group time-dependent neutron diffusion equation with time-dependent xenon and iodine concentrations. The fuel temperature and moderator density feedback is limited to a steady-state model. All the X-Y calculations were performed in an average enthalpy plane.

The basic nuclear cross-sections used in this study were generated from a unit cell depletion program which has evolved from the codes LEOPARD (Reference 17) and CINDER (Reference 18). The detailed experimental data during the tests including the reactor power level, enthalpy rise and the impulse motion of the control rod assembly, as well as the plant follow burnup data were closely simulated in the study.

The results of the stability calculation for the axial tests are compared with the experimental data in Table 4.3.2-4. The calculations show conservative results for both of the axial tests with a margin of approximately -0.01 hr^{-1} in the stability index.

An analytical simulation of the first X-Y xenon oscillation test shows a calculated stability index of -0.081 hr^{-1}, in good agreement with the measured value of -0.076 hr^{-1}. As indicated earlier, the second X-Y xenon test showed that the core had become more stable compared to the first test and no evaluation of the stability index was attempted. This increase in the core stability in the X-Y plane due to increased fuel burnup is due mainly to the increased magnitude of the negative moderator temperature coefficient.

Previous studies of the physics of xenon oscillations, including three-dimensional analysis, are reported in the series of topical reports, References 12, 13 and 14. A more detailed description of the experimental results and analysis of the axial and X-Y xenon transient tests is presented in Reference 15 and Section 1 of Reference 19.

4.3.2.8.6 Stability Control and Protection

The excore detector system is utilized to provide indications of xenon-induced spatial oscillations. The readings from the excore detectors are available to the operator and also form part of the protection system.

1. Axial Power Distribution

   For maintenance of proper axial power distributions, the operator is instructed to maintain an axial offset within a prescribed operating band, based on the excore detector readings. Should the axial off-set be permitted to move far enough outside this band, the protection limit will be reached and the power will be automatically reduced.

   Twelve-foot pressurized water reactor cores become less stable to axial xenon oscillations as fuel burnup progresses. However, free xenon oscillations are not allowed to occur, except for special tests. The full-length control rod banks are sufficient to dampen and control any axial xenon oscillations present. Should the axial offset be inadvertently permitted to move far enough outside the control band due to an axial xenon oscillation, or any other reason, the protection limit on axial offset will be reached and the power will be automatically reduced.

2. Radial Power Distribution

   The core described herein is calculated to be stable against X-Y xenon induced oscillations at all times in life.

   The X-Y stability of large PWR's has been further verified as part of the startup physics test program for PWR cores with 193 fuel assemblies. The measured X-Y stability of the PWR cores with 157 and 193 assemblies was in good agreement with the calculated stability, as discussed in Subparagraphs 4.3.2.8.4 and 4.3.2.8.5. In the unlikely event that X-Y oscillations occur, back-up actions are possible and would be implemented, if necessary, to increase the natural stability of the core. This is based on the fact that several actions could be taken to make the moderator temperature coefficient more negative, which will increase the stability of the core in the X-Y plane.

Provisions for protection against non-symmetric perturbations in the X-Y power distribution that could result from equipment malfunctions are made in the protection system design. This includes control rod drop, rod misalignment and asymmetric loss of coolant flow.

A more detailed discussion of the power distribution control in PWR cores is presented in Reference 6 and 7.

4.3.2.9 Vessel Irradiation

A brief review of the methods and analyses used in determination of neutron and gamma flux attenuation between the core and the pressure vessel is given below. A more complete discussion on the pressure vessel irradiation and surveillance program is given in Paragraph 5.4.3.7.

The materials that serve to attenuate neutrons originating in the core and gamma rays from both the core and structural components consist of the core baffle, core barrel, neutron panels, and associated water annuli, all of which are within the region between the core and the pressure vessel.

In general, few group neutron diffusion theory codes are used to determine flux and fission power density distributions within the active core and the accuracy of these analyses is verified by in-core measurements on operating reactors. Region and rod-wise power sharing information from the core calculations is then used as source information in two-dimensional S_n transport calculations which compute the flux distributions throughout the reactor.

The neutron flux distribution and spectrum in the various structural components vary significantly from the core to the pressure vessel. Representative values of the neutron flux distribution and spectrum are presented in Table 4.3.2-5. The values listed are based on time-averaged equilibrium cycle reactor core parameters and power distributions, and thus, are suitable for long term nvt projections and for correlation with radiation damage estimates.

As discussed in Paragraph 5.4.3.7, the irradiation surveillance program utilizes actual test samples to verify the accuracy of the calculated fluxes at the vessel.

4.3.3 Analytical Methods

Calculations required in nuclear design consist of three distinct types, which are performed in sequence:

1. determination of effective fuel temperatures
2. generation of macroscopic few-group parameters
3. space-dependent, few-group diffusion calculations

These calculations are carried out by computer codes which can be executed individually. However, at Westinghouse most of the codes required have been linked to form a automated design sequence which minimizes design time, avoids errors in transcription of data, and standardizes the design methods.

4.3.3.1 Fuel Temperature (Doppler) Calculations

Temperatures radially vary within the fuel rod, depending on the heat generation rate in the pellet, the conductivity of the materials in the pellet, gap, and clad, and the temperature of the coolant.

The fuel temperatures for use in most nuclear design Doppler calculations are obtained from a simplified version of the Westinghouse fuel rod design model described in Subparagraph 4.2.1.3.1 which considers the effect of radial variation of pellet conductivity, expansion-coefficient and heat generation rate, elastic deflection of the clad, and a gap conductance which depends on the initial fill gas, the hot open gap dimension, and the fraction of the pellet over which the gap is closed and the evolution of helium gas from the IFBA, if present. The fraction of the gap assumed closed represents an empirical adjustment used to produce good agreement with observed reactivity data at BOL. Further gap closure occurs with burnup and accounts for the decrease in Doppler defect with burnup which has been observed in operating plants.

For detailed calculations of the Doppler coefficient, such as for use in xenon stability calculations, a more sophisticated temperature model is used which accounts for the effects of fuel swelling, fission gas release, and plastic clad deformation.

Radial power distributions in the pellet as a function of burnup are obtained from LASER (Reference 20) calculations.

The effective U-238 temperature for resonance absorption is obtained from the radial temperature distribution by applying a radially dependent weighting function. The weighting function was determined from REPAD (Reference 21) Monte Carlo calculations of resonance escape probabilities in several steady state and transient temperature distributions. In each case a flat pellet temperature was determined which produced the same resonance escape probability as the actual distribution. The weighting function was empirically determined from these results.

The effective Pu-240 temperature for resonance absorption is determined by a convolution of the radial distribution of Pu-240 number densities from LASER burnup calculations and the radial weighting function. The resulting temperature is burnup dependent, but the difference between U-238 and Pu-240 temperatures, in terms of reactivity effects, is small.

The effective pellet temperature for pellet dimensional change is that value which produces the same outer pellet radius in a virgin pellet as that obtained from the temperature model. The effective clad temperature for dimensional change is its average value.

The temperature calculational model has been validated by plant Doppler defect data as shown in Table 4.3.2-6 and Doppler coefficient data as shown in Figure 4.3.2-43. Stability index measurements also provide a sensitive measure of the Doppler coefficient near full power (See Paragraph 4.3.2.8). It can be seen that Doppler defect data is typically within 0.2 percent $\Delta\rho$ of prediction.

4.3.3.2 Macroscopic Group Constants

Macroscopic few-group constants and consistent microscopic cross sections (needed for feedback and microscopic depletion calculations) are generated for fuel cells by ARK or PHOENIX-P.

ARK (Reference 22) is a point model cell-homogenization, neutron spectrum, isotopic depletion program which evolved from the codes LEOPARD (Reference 17) and CINDER (Reference 18). Normally a simplified approximation of the main fuel chains is used; however, where needed, a complete solution for significant isotopes in the fuel chains, from Th-232 to Cm-244, is available (Reference 23). Microscopic fast and thermal cross section data are taken for the most part from the ENDF/B library (Reference 24) with a few exceptions where other data provide better agreement with experimental data. Group constants for control rods are calculated in a linked version of the HAMMER (Reference 25) and AIM (Reference 26) codes to provide an improved treatment of self shielding in the broad resonance structure of these isotopes at epithermal energies relative to that available in LEOPARD. Until the advent of PHOENIX-P, ARK was the basis for all reactivity calculations, depletion rates, and reactivity feedback models.

Validation of the cross section method is based on analysis of critical experiments as shown in Table 4.3.2-7, isotopic data as shown in Table 4.3.2-8, plant critical boron (C_B) values at HZP, BOL, as shown in Table 4.3.2-9 and at HFP as a function of burnup as shown in Figures 4.3.2-44 through 4.3.2-46. Control rod worth measurements are shown in Table 4.3.2-10.

Confirmatory critical experiments on burnable absorbers are described in Reference 27.

PHOENIX (Reference 35) is a two-dimensional, multigroup neutron transport theory code for calculating lattice physics parameters for LWR core modeling. PHOENIX-P is an adaptation of PHOENIX for PWR lattice physics analyses. Its cross section library was established from the CSRL-V 227 group ENDF/B-V (Reference 36) cross section library. Geometric capabilities include the ability to model different types of pin cell and assembly configurations present in Westinghouse PWRs. It includes the capability for cell lattice modeling on an assembly level. It provides homogenized, two-group cross sections for nodal calculations and feedback models. It is also used in a special geometry to generate appropriately weighted constants for the baffle/reflector regions. Validation of PHOENIX-P is discussed in Reference 37.

4.3.3.3 Spatial Few-Group Diffusion Calculations

Spatial few-group diffusion calculations primarily consist of two-group X-Y calculations using an updated version of the TURTLE code, two group X-Y nodal calculations using PALADON or ANC, two-group axial calculations using APOLLO, an advanced version of the PANDA code, and three dimensional calculations using THURTLE (Reference 28), a three-dimensional version of TURTLE, PALADON, or ANC.

Discrete X-Y calculations (1 mesh per cell) or nodal calculations are performed to determine critical boron concentrations and power distributions in the X-Y plane. An axial average in the X-Y plane is obtained by synthesis from unrodded and rodded planes or by three dimensional nodal calculations. The moderator temperature coefficient is evaluated by varying the inlet temperature in the same X-Y calculations used for power distribution and reactivity predictions.

Validation of TURTLE and THURTLE reactivity calculations is associated with the validation of the group constants themselves, as discussed in Paragraph 4.3.3.2. Validation of the Doppler calculations is associated with the fuel temperature validation discussed in Paragraph 4.3.3.1. Validation of the moderator coefficient calculations is obtained by comparison with plant measurements at hot zero power conditions as shown in Table 4.3.2-11.

THURTLE is primarily used in evaluating three-dimensional effects such as xenon redistribution. In addition, THURTLE is used to validate one- and two-dimensional results from APOLLO and TURTLE.

PALADON is used in two-dimensional and three-dimensional performance of safety analysis calculations, critical boron concentrations, control rod worths, reactivity coefficients, etc. PALADON calculations are normalized to TURTLE results whenever necessary.

ANC is used in two-dimensional and three-dimensional performance of safety analysis calculations, critical boron concentrations, X-Y power and burnup distributions, control rod worths, reactivity coefficients, etc. Validation of ANC results is discussed in reference 31.

APOLLO utilizes the burnup-dependent macroscopic cross sections generated by ARK or PHOENIX-P. The cross sections are collapsed from three-dimensional calculations using power volume weighting. The APOLLO model is used as an axial model. APOLLO is utilized to determine differential rod worths, axial power shapes during steady state and transient xenon conditions, burnup distributions, and control rod operational limits, etc.

Validation of the spatial codes for calculating power distributions involves the use of incore and excore detectors and is discussed in Subparagraph 4.3.2.2.7.

Based on comparison with measured data it is estimated that the accuracy of current analytical methods is:

± 0.2 percent $\Delta\rho$ for Doppler defect

± 2 x 10^{-5} $\Delta\rho$/°F for moderator coefficient

± 50 ppm for critical boron concentration with depletion

± 3 percent for power distributions

± 0.2 percent $\Delta\rho$ for rod bank worth

± 4 pcm/step for differential rod worth

± 0.5 pcm/ppm for boron worth

± 0.1 percent $\Delta\rho$ for moderator defect

4.3.4 References

1. Westinghouse Anticipated Transients Without Reactor Trip Analysis, WCAP-8330, August 1974.

2. F. L. Langford and R. J. Nath, Jr. "Evaluation of Nuclear Hot Channel Factor Uncertainties" WCAP-7308-L, April, 1969 (Westinghouse Proprietary) and WCAP-7810 (Non-Proprietary), December 1971.

3. J. M. Hellman, (Ed), "Fuel Densification Experimental Results and Model for Reactor Application," WCAP-8218-P-A (Proprietary) and WCAP-8219-A (Non-Proprietary), March 1975.

4. R. O. Meyer, "The Analysis of Fuel Densification," Division of Systems Safety, USNRC, NUREG-0085, July 1976.

5. Hellman, J. M., Olson, C. A. and Yang, J. W., "Effects of Fuel Densification Power Spikes on Clad Thermal Transients," WCAP-8359, July 1974.

6. J. S. Moore "Power Distribution Control of Westinghouse Pressurized Water Reactors," WCAP-7811, December, 1971.

7. Morita, T., et al., "Power Distribution Control and Load Following Procedures," WCAP-8385 (Proprietary) and WCAP-8403 (Non-Proprietary), September 1974.

8. A. F. McFarlane, "Power Peaking Factors," WCAP-7912-P-A, March 1971 (Westinghouse Proprietary) and WCAP-7912-A (Non-Proprietary), January, 1975.

9. S. Altomare and R. F. Barry, "The TURTLE 24.0 Diffusion Depletion Code," WCAP-7758, September, 1971.

10. T. M. Camden et al., "PALADON - Westinghouse Nodal Computer Code," WCAP-9485 (Non-Proprietary) and WCAP-9486 (Proprietary), December 1978.

11. J. O. Cermak et al., "Pressurized Water Reactor pH - Reactivity Effect" Final Report, WCAP-3696-8 (EURAEC-2074), October 1968.

12. C. G. Poncelet and A. M. Christie, "Xenon-Induced Spatial Instabilities in Large PWRs," WCAP-3680-20, (EURAEC-1974), March 1968.

13. F. B. Skogen and A. F. McFarlane, "Control Procedures for Xenon-Induced X-Y Instabilities in Large PWRs," WCAP-3680-21, (EURAEC-2111), February 1969.

14. F. B. Skogen and A. F. McFarlane "Xenon-Induced Spatial Instabilities in Three-Dimensions," WCAP-3680-22 (EURAEC-2116), September 1969.

15. J. C. Lee, et al., "Axial Xenon Transient Tests at the Rochester Gas and Electric Reactor," WCAP-7964, June 1971.

16. R. F. Barry, et al., "The PANDA Code," WCAP-7757-A, February 1975.

17. R. F. Barry, "LEOPARD - A Spectrum Dependent Non-Spatial Depletion Code for the IBM-7094," WCAP-3269-26, September 1963.

18. T. R. England, "CINDER - A One-Point Depletion and Fission Product Program," WAPD-TM-344, August 1962.

19. Eggleston, F. R., "Safety-Related Research and Development for Westinghouse Pressurized Water Reactors, Program Summaries, Winter 1977, Summer 1978" WCAP-8768, Revision 2, October 1978.

20. C. G. Poncelet, "LASER - A Depletion Program for Lattice Calculations Based on MUFT and THERMOS," WCAP-6073, April 1966.

21. J. E. Olhoeft, "The Doppler Effect for a Non-Uniform Temperature Distribution in Reactor Fuel Elements," WCAP-2048, July 1962.

22. Raymond, M., et al., "ARK(C) - A Spectrum-Dependent Neutron Flux, Reactivity and Fuel Depletion Program for PWR Lattice Cells," WCAP-9523, August 1979.

23. R. J. Nodvik, et al., "Supplementary Report on Evaluation of Mass Spectrometric and Radiochemical Analyses of Yankee Core I Spent Fuel, Including Isotopes of Elements Thorium Through Curium," WCAP-6086, August 1969.

24. M. K. Drake, Ed., "Data Formats and Procedure for the ENDF Neutron Cross Section Library," BNL-50274, ENDF-102, Vol. I, 1970.

25. J. E. Suich and H. C. Honeck, "The HAMMER System, Heterogeneous Analysis by Multigroup Methods of Exponentials and Reactors," DP-1064, January 1967.

26. H. P. Flatt and D. C. Baller, "AIM-5, A Multigroup, One Dimensional Diffusion Equation Code," NAA-SR-4694, March 1960.

27. J. S. Moore, "Nuclear Design of Westinghouse Pressurized Water Reactors with Burnable Poison Rods," WCAP-7806, December 1971.

28. Beard, C. L., and Steitler, R. W., "THURTLE - Multidimensional Neutron Diffusion Theory Code," WCAP-8344, June 1974 (Westinghouse Proprietary).

29. Information on Densification Power Spike Factor Enrichment Limits transmitted from L. A. Livingston, Westinghouse to R. H. Davidson, Tennessee Valley Authority in a letter dated 1/28/87. L43 870202 326.

30. Miller, R. W., Pogorzelski, N. A. Vestovich, J. A., "Relaxation of Constant Axial Offset Control F_Q Surveillance Technical Specification," WCAP-10216, August 1982.

31. Liu, Y. S., et al., "ANC: A Westinghouse Advanced Nodal Code," WCAP-10965-P-A (Westinghouse Proprietary), December 1985.

32. Stanley E. Turner (Holtec International), "Criticality Safety Analysis - Spent Fuel Storage Racks - Sequoyah Nuclear Plant," PFE - J54 (TVA Nuclear Fuel Division).

33. Letter, N. R. Metcalf (Westinghouse) to T. A. Keys (TVA), July 17, 1990, 90TV*-G-077, "Tennessee Valley Authority Sequoyah and Watts Bar Nuclear Plants - Sequoyah/Watts Bar Fuel Rack Criticality Analysis." RIMS L38 900718 809.

34. Henderson, W.B., " Results of the Control Rod Worth Program; " WCAP- 9217 (Proprietary) and WCAP-9218 (Non-Proprietary), October 1977.

35. Harris, A. J., Mayhue, L. T., and Mildrum, C. M., "A Description of the Nuclear Design Analysis Programs for Boiling Water Reactors," WCAP-10106-P-A (Proprietary), June 1982.

36. Ford, W. E., et al., "CSRL-V: Processed ENDF/B-V 227-Neutron-Group and Point-wise Cross Section Libraries for Criticality Safety, Reactor and Shielding Studies," NUREG/CR-2306, ORNL/CSD/TM-160 (1982).

37. Nguyen, T. Q., et al., "Qualification of the PHOENIX-P/ANC Nuclear Design System for Pressurized Water Reactor Cores," WCAP-11596, November 1987.

38. Stanley E Turner (Holtec International), “Criticality Safety Analyses of Sequoyah Spent Fuel Racks with Alternative Arrangements,” HI-992349

39. B.K. Grimes (NRC GL78011), “OT Position for Review and Acceptance of Spent Fuel Storage and Handling Applications,” April 14, 1978

40. L. Kopp, “Guidance On The Regulatory Requirements For Criticality Analysis Of Fuel Storage At Light-Water Reactor Power Plants,” August 19, 1998

41. UFSAR, Section 4.3.2.7, "Critically of Fuel Assemblies"

42. Double contingency principle of ANSI N16.1-1975, as specified in the April 14, 1978 NRC letter (Section 1.2) and implied in the proposed revision to Regulatory Guide 1.13 (Section 1.4, Appendix A).

43. K. K. Niyogi (Holtec International), “Boron Dilution Analysis,” HI-992302

44. FSAR, Section 15.4.5

TABLE 4.3.2-1 (Sheet 1)

REACTOR CORE DESCRIPTION
(First Cycle)

Active Core	
Equivalent Diameter, in.	132.7
Core Average Active Fuel Height, in.	144
Height-to-Diameter Ratio	1.09
Total Cross-Section Area, ft^2	96.04
H_2O/U Molecular Ratio, Lattice (Cold)	2.43
Reflector Thickness and Composition	
Top - Water plus Steel, in.	~10
Bottom - Water plus Steel, in.	~10
Side - Water plus Steel, inc.	~15
Fuel Assemblies	
Number	193
Rod Array	17 x 17
Rods per Assembly	264
Rod Pitch, in.	0.496
Overall Transverse Dimensions, in.	8.426 x 8.426
Fuel Weight (as UO_2), lbs.	222,645
Zircaloy Weight, lbs.	46,993
Number of Grids per Assembly	8-R type
Composition of grids	INCONEL-718
Weight of Grids (Effective in Core) lbs.	1842
Number of Guide Thimbles per Assembly	24
Composition of Guide Thimbles	Zircaloy 4
Diameter of Guide Thimbles (upper part), in.	0.450 I.D. x 0.482 O.D.
Diameter of Guide Thimbles (lower part), in.	0.397 I.D. x 0.4290 O.D.
Diameter of Instrument Guide Thimbles, in.	0.450 I.D. x 0.4820 O.D.
Burnable Absorber Rods	
Number	1400
Material	Borosilicate Glass
Outside Diameter, in.	0.381
Inner Tube, O.D., in.	0.1815
Clad Material	Stainless Steel
Inner Tube Material	Stainless Steel
Boron Loading (w/o B_20_3 in glass rod)	12.5
Weight of Boron-10 per foot of rod, lb/ft	.000419
Initial Reactivity Worth, %$\Delta\rho$	7.63 (hot), ~5.5 (cold) 7.4 (hot, 1167 ppm) 4.1 (cold, 2000 ppm) 6.7 (cold, 0 ppm)
Excess Reactivity	
Maximum Fuel Assembly K (Cold, Clean, Unborated Water)	1.39
Maximum Core Reactivity (Cold, Zero Power, Beginning of Cycle)	1.222

TABLE 4.3.2-1 (Sheet 2)

REACTOR CORE DESCRIPTION
(First Cycle)

Fuel Rods	
Number	50,952
Outside Diameter, in.	0.374
Diameter Gap, in.	0.0065
Clad Thickness, in.	0.0225
Clad Material	Zircaloy-4
Fuel Pellets	
Material	UO_2 Sintered
Density (percent of Theoretical)	95
Fuel Enrichments w/o	
Region 1	2.10
Region 2	2.60
Region 3	3.10
Diameter, in.	0.3225
Length, in.	0.530
Mass of UO_2 per Foot of Fuel Rod, lb/ft	0.364
Rod Cluster Control Assemblies	
Neutron Absorber	Ag-In-Cd
Composition	80%, 15%, 5%
Diameter, in.	0.341
Density, lbs/in.^{3}	0.367
Cladding Material	Type 304, Cold Worked Stainless Steel
Clad Thickness, in.	0.0185
Number of Clusters, Full length	53
Number of Absorber Rods per Cluster	24
Full Length Assembly Weight (dry), lb.	147.0

TABLE 4.3.2-2

NUCLEAR DESIGN PARAMETERS
(First Cycle)

Core Average Linear Power, kw/ft, including densification effects	5.44
Total Heat Flux Hot Channel Factor, F_Q	2.237
Nuclear Enthalpy Rise Hot Channel Factor, $F^N_{\Delta H}$	1.55
Reactivity Coefficients	
Doppler Coefficient:	See Figures 4.3.2-27 and 4.3.2-28
Moderator Temperature Coefficient at Operating Conditions, pcm/°F[(a)]	0 to -40.0
Boron Coefficient in Primary Coolant, pcm/ppm[(a)]	-16 to -8
Rodded Moderator Density Coefficient at Operating Conditions, Δk/gm/cc	$\leq$ +0.43
Delayed Neutron Fraction and Lifetime	
$ß_{eff}$ BOL, (EOL)	0.0075, (0.0044)
ℓ*, BOL, (EOL), μ sec	19.4 (18.1)
Control Rod Worths	
Rod Requirements	See Table 4.3.2-3
Maximum Bank Worth, pcm	< 2000
Maximum Ejected Rod Worth	See Chapter 15
Boron Concentrations (Beginning of Cycle	
Refueling	2000
k_{eff} = 0.95, Cold, Rod Cluster Control Assemblies In	1333
Zero Power, K_{eff} = 0.99, Cold, Rod Cluster Control Assemblies Out	1458
Zero Power, k_{eff} = 0.99, Hot, Rod Cluster Control Assemblies Out	1356
Full Power, No Xenon, k_{eff} = 1.0, Hot Rod Cluster Control Assemblies Out	1154
Full Power, Equilibrium Xenon, k_{eff} = 1.0, Hot, Rod Cluster Control Assemblies Out	869
Reduction With Fuel Burnup	
First Cycle, ppm/GWD/MTU[(b)]	See Figure 4.3.2-3
Reload Cycle, ppm/GWD/MTU	~100

(a) Note: 1 pcm = (percent mille) 10^{-5} $\Delta\rho$ where $\Delta\rho$ is calculated from two statepoint values of k_{eff} by 1n (k_2/k_1).

(b) Gigawatt Day (GWD) = 1000 Megawatt Day (1000 MWD). During the first cycle, the fixed burnable absorbers significantly reduce the boron depletion rate compared to reload cycles. The values quoted are representative of averages only.

TABLE 4.3.2-3

REACTIVITY REQUIREMENTS FOR ROD CLUSTER CONTROL ASSEMBLIES

Reactivity Effects, percent $\Delta\rho$	End of Life Typical Cycle
1. Control requirements	
Fuel temperature (Doppler), %$\Delta\rho$	1.10
Moderator temperature, %$\Delta\rho$	1.03
Void, %$\Delta\rho$	0.05
Redistribution, %$\Delta\rho$	0.95
Rod Insertion Allowance, %$\Delta\rho$	0.58
2. Total Control, %$\Delta\rho$	3.71
3. Estimated Rod Cluster Control Assembly Worth (53 Rods)*	
a. All full length assemblies inserted, %$\Delta\rho$	7.17
b. All but one (highest worth) assemblies inserted, %$\Delta\rho$	6.25
4. Estimated Rod Cluster Control Assembly credit with 7 percent adjustment to accommodate uncertainties (3b - 7 percent), %$\Delta\rho$	5.81
5. Shutdown margin available (4-2), %$\Delta\rho$	2.10[(a)]

[(a)] The design basis minimum shutdown is 1.6%.

*Unit 1 is permitted to operate with 52 control rod assemblies (with no control rod assembly installed in core location H-8) during U1C24 and U1C25.

*Unit 2 is permitted to operate with 52 Control Rod Assemblies (with no Control Rod Assembly installed in core location H-8) during Unit 2 Cycle 24 (U2C24) and U2C25.

TABLE 4.3.2-4

AXIAL STABILITY INDEX
PWR CORE WITH A 12-FT HEIGHT

Burnup (MWD/T	F_Z	C_B (ppm)	Stability Index (hr^{-1}) Exp	Calc
1550	1.34	1065	-0.041	-0.032
7700	1.27	700	-0.014	-0.006
		Difference:	+0.027	+0.026

TABLE 4.3.2-5

TYPICAL NEUTRON FLUX LEVELS (n/cm^2-sec) AT FULL POWER

	E > 1.0 Mev	5.53 Kev < E ≤ 1.0 Mev	.625 ev ≤ E < 5.53 Kev	E < .625 ev $(nv)_0$
CORE CENTER	6.51×10^{13}	1.12×10^{14}	8.50×10^{13}	3.00×10^{13}
CORE OUTER RADIS AT MIDHEIGHT	3.23×10^{13}	5.74×10^{13}	4.63×10^{13}	8.60×10^{12}
CORE TOP, ON AXIS	1.53×10^{13}	2.42×10^{13}	2.10×10^{13}	1.63×10^{13}
CORE BOTTOM, ON AXIS	2.36×10^{13}	3.94×10^{13}	3.50×10^{13}	1.46×10^{13}
PRESSURE VESSEL INNER WALL, AZIMUTHAL PEAK, CORE MIDHEIGHT	2.77×10^{10}	5.75×10^{10}	6.03×10^{10}	8.38×10^{10}

TABLE 4.3.2-6

COMPARISON OF MEASURED AND CALCULATED DOPPLER DEFECTS

Plant	Fuel Type	Core Burnup (MWD/MTU)	Measured (pcm)[1]	Calculated (pcm)
1	Air-filled	1800	1700	1710
2	Air-filled	7700	1300	1440
3	Air and helium filled	8460	1200	1210

[1] pcm = 10^5 x 1n k_1/k_2

TABLE 4.3.2-7

RESULTS OF KENO-IV BENCHMARK CALCULATIONS

Case No.	Experiment		k_{eff}	+ 0
1	ORNL critical experiment	(1)	0.998	0.005
2	La Crosse startup cold critical	(2)	1.011*	0.005
3	Battelle Experiment 020	(3)	1.000	0.004
4	Battelle Experiment 016	(3)	1.001	0.004
5	Battelle Experiment 032	(3)	1.009	0.004
6	Battelle Experiment 034	(3)	0.996	0.004

(1) ORNL unpublished critical results: private communication.

(2) ACNP-65570, Low Power Nuclear Startup Program for the La Crosse Boiling Water Reactor, July 1966.

(3) PNL-2438, Critical Separation between Subcritical Clusters of 2.35 Wt% U-235 Enriched UO_2 Rods in Water with Fixed Neutron Poisons, Oct. 1977.

*Adjusted for grids, k_{eff} = 1.008. Experimental k_{eff} adjusted to the unrodded condition was 1.009.

TABLE 4.3.2-8

SAXTON CORE II ISOTOPICS
ROD MY, AXIAL ZONE 6

Atom Ratio	Measured[1]	2s Precision (%)	LEOPARD Calculation
U-234/U	4.65×10^{-5}	±29	4.60×10^{-5}
U-235/U	5.74×10^{-3}	±0.9	5.73×10^{-3}
U-236/U	3.55×10^{-4}	±5.6	3.74×10^{-4}
U-238/U	0.99386	±0.01	0.99385
Pu-238/Pu	1.32×10^{-3}	±2.3	1.222×10^{-3}
Pu-239/Pu	0.73971	±0.03	0.74497
Pu-240/Pu	0.19302	±0.2	0.19102
Pu-241/Pu	6.014×10^{-2}	±0.3	5.74×10^{-2}
Pu-242/Pu	5.81×10^{-3}	±0.9	5.38×10^{-3}
Pu/U[2]	5.938×10^{-2}	±0.7	5.970×10^{-2}
Np-237/U-238	1.14×10^{-4}	±15	0.86×10^{-4}
Am-241/Pu-239	1.23×10^{-2}	±15	1.08×10^{-2}
Cm-242/Pu-239	1.05×10^{-4}	±10	1.11×10^{-4}
Cm-244/Pu-239	1.09×10^{-4}	±20	0.98×10^{-4}

[1] Reported in Reference 25
[2] Weight ratio.

TABLE 4.3.2-9

CRITICAL BORON CONCENTRATIONS, HZP, BOL

Plant Type	Measured	Calculated
2-Loop, 121 Assemblies 10 foot core	1583	1589
2-Loop, 121 Assemblies 12 foot core	1625	1624
2-Loop, 121 Assemblies 12 foot core	1517	1517
3-Loop, 157 Assemblies 12 foot core	1169	1161

TABLE 4.3.2-10

COMPARISON OF MEASURED AND CALCULATED ROD WORTH

2-Loop Plant, 121 Assemblies, 10 foot core	Measured (pcm)	Calculated (pcm)
Group B	1885	1893
Group A	1530	1649
Shutdown Group	3050	2917
ESADA Critical [1], 0.69" Pitch, 2 w/o PuO_2, 8% Pu^{240}, 9 Control Rods		
6.21" rod separation	2250	2250
2.07" rod separation	4220	4160
1.38" rod separation	4100	4010

[1] Reported in Reference 26

TABLE 4.3.2-11

COMPARISON OF MEASURED AND CALCULATED MODERATOR COEFFICIENTS AT HZP, BOL

Plant Type/ Control Bank Configuration	Measured α_{iso} (1) (pcm/°F)	Calculated α_{iso} (pcm/°F)
3-Loop, 157 Assemblies, 12 foot core		
D at 160 steps	-0.50	-0.50
D in, C at 190 steps	3.01	-2.75
D in, C at 28 steps	-7.67	-7.02
B, C, and D in	-5.16	-4.45
2-Loop, 121 Assemblies, 12 foot core		
D at 180 steps	+0.85	+1.02
D in, C at 180 steps	-2.40	-1.90
C and D in, B at 165 steps	-4.40	-5.58
B, C, and D in, A at 174 steps	8.70	-8.12

(1) Isothermal coefficients, which include the Doppler effect in the fuel.

$$\alpha_{iso} = 10^5 \ln \frac{k_2}{k_1} / \Delta T \, ^\circ F$$

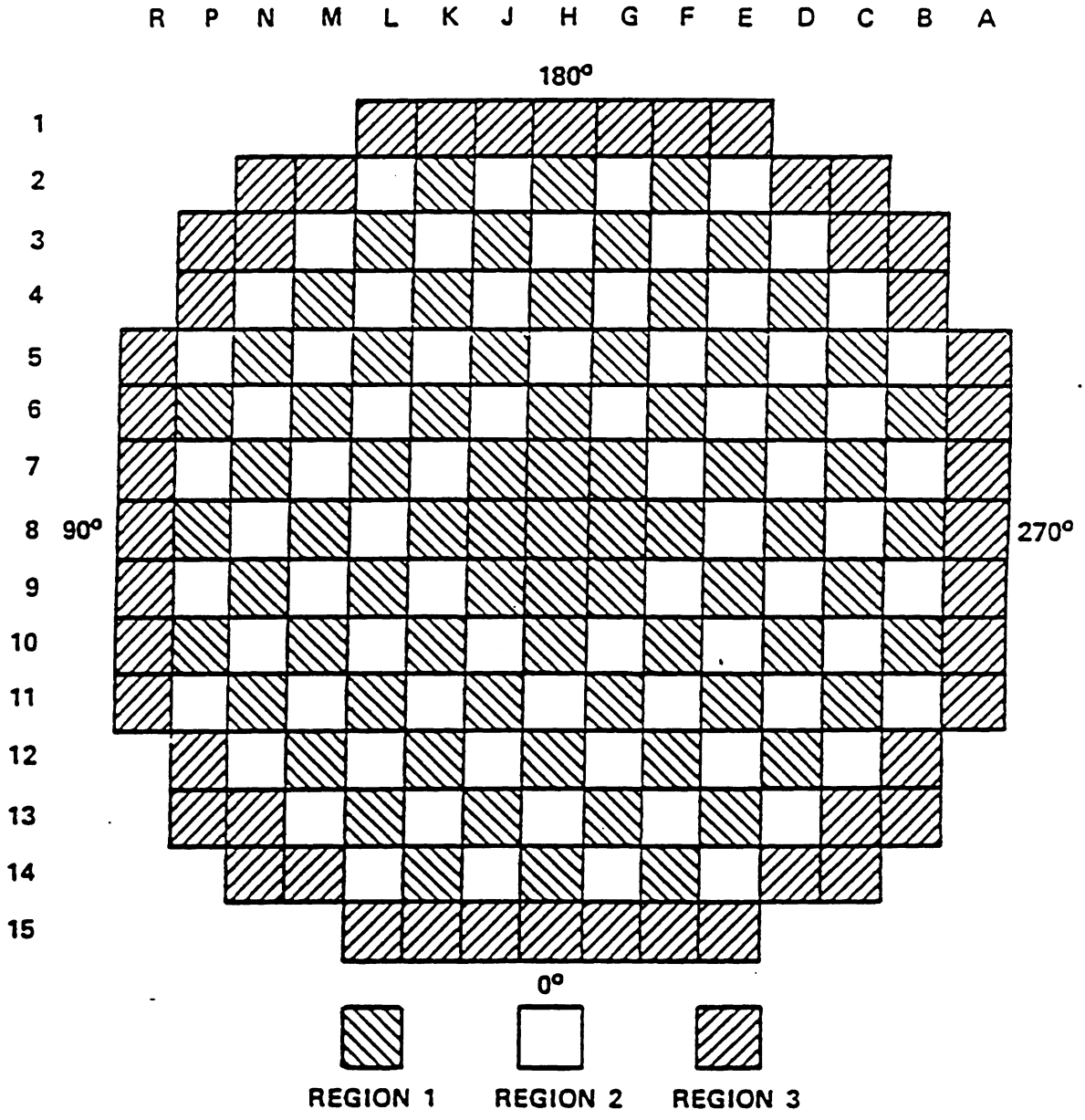

Figure 4.3.2-1. Cycle 1 Fuel Loading Arrangement

Best Available Historical Image

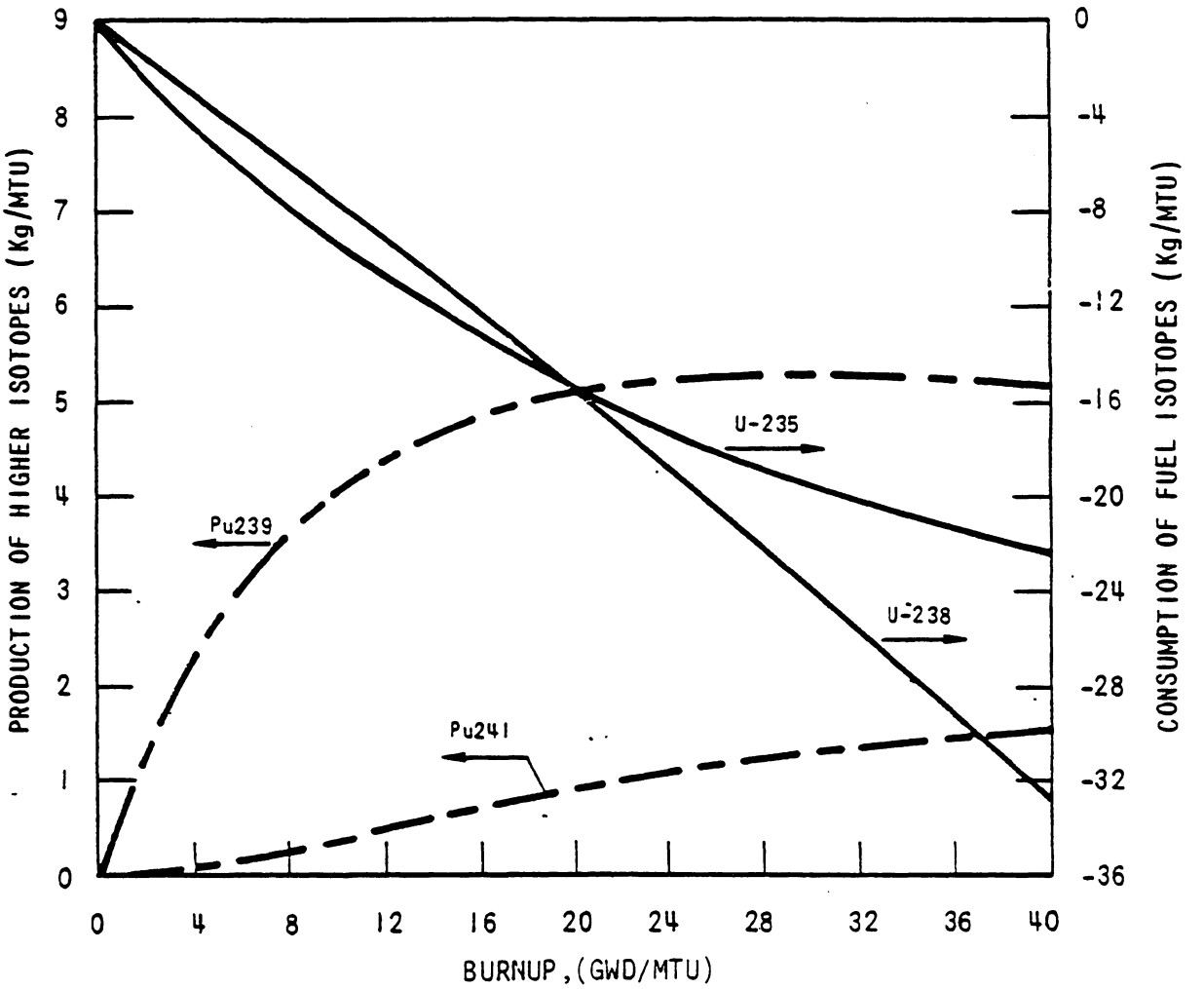

Figure 4.3.2-2 Production and Consumption of Higher Isotopes

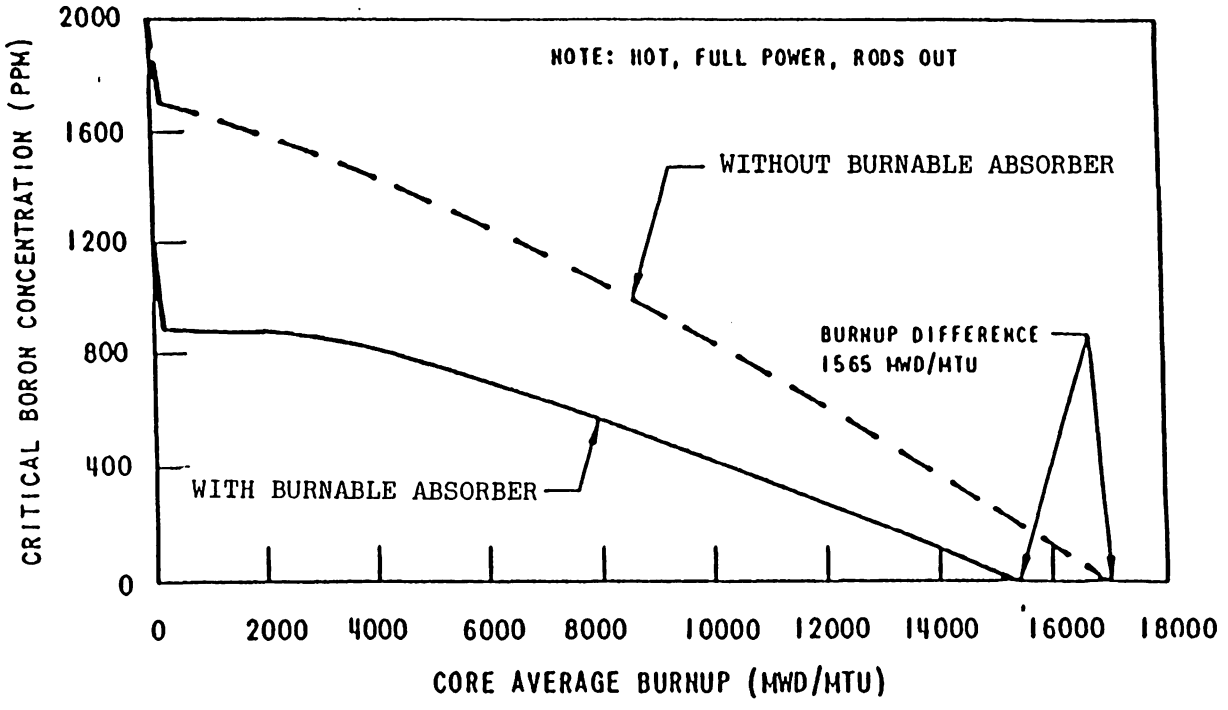

Figure 4.3.2-3 -Boron Concentration versus First Cycle Burnup with and without Burnable ABSORBER

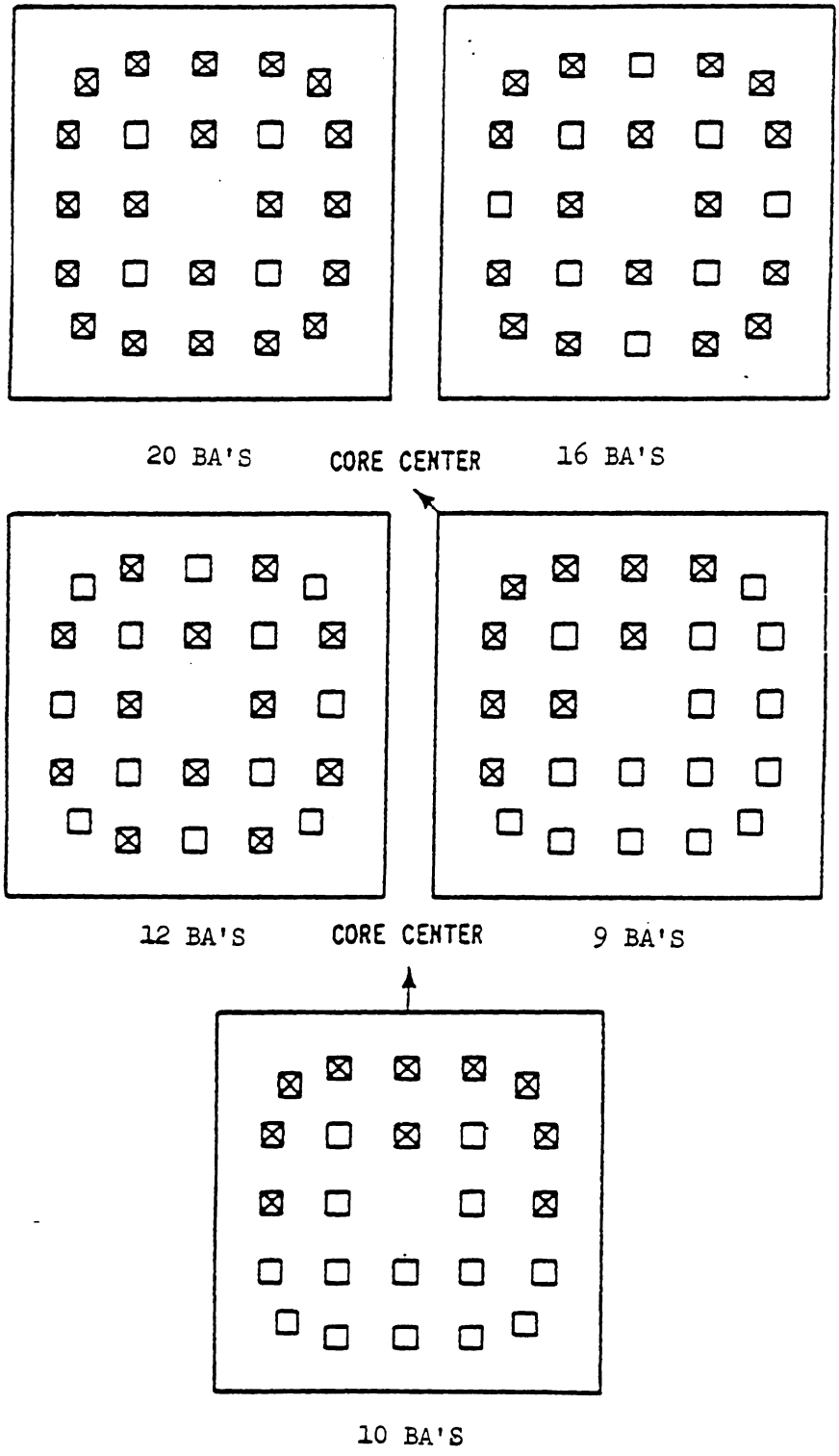

Figure 4.3.2-4 Cycle 1 Burnable Absorber Rod Arrangement Within An Assembly

Best Available Historical Image

	R	P	N	M	L	K	J	H	G	F	E	D	C	B	A	
								180°								
1						10		10		10						
2			9		9		12		1S 12		9		9			
3		9		16		16		4S 20		16		16		9		
4			16		16		16		16		16		16			
5		9		16		20		20		20		16		9		
6	10		16		20		20		20		20		16		10	
7		12		16		20		12	4S	20		16		12		
8 90°	10		20		20		12		12		20		20		10	270°
9		12		16		20	4S	12		20		16		12		
10	10		16		20		20		20		20		16		10	
11		9		16		20		20		20		16		9		
12			16		16		16		16		16		16			
13		9		16		16		4S 20		16		16		9		
14			9		9		12		1S 12		9		9			
15						10		10		10						
								0°								

NUMBER INDICATES NUMBER OF BURNABLE ABSORBER RODS.
S INDICATES SOURCE ROD.

Figure 4.3.2-5 Burnable Absorber Loading Pattern for Cycle 1.

Best Available Historical Image

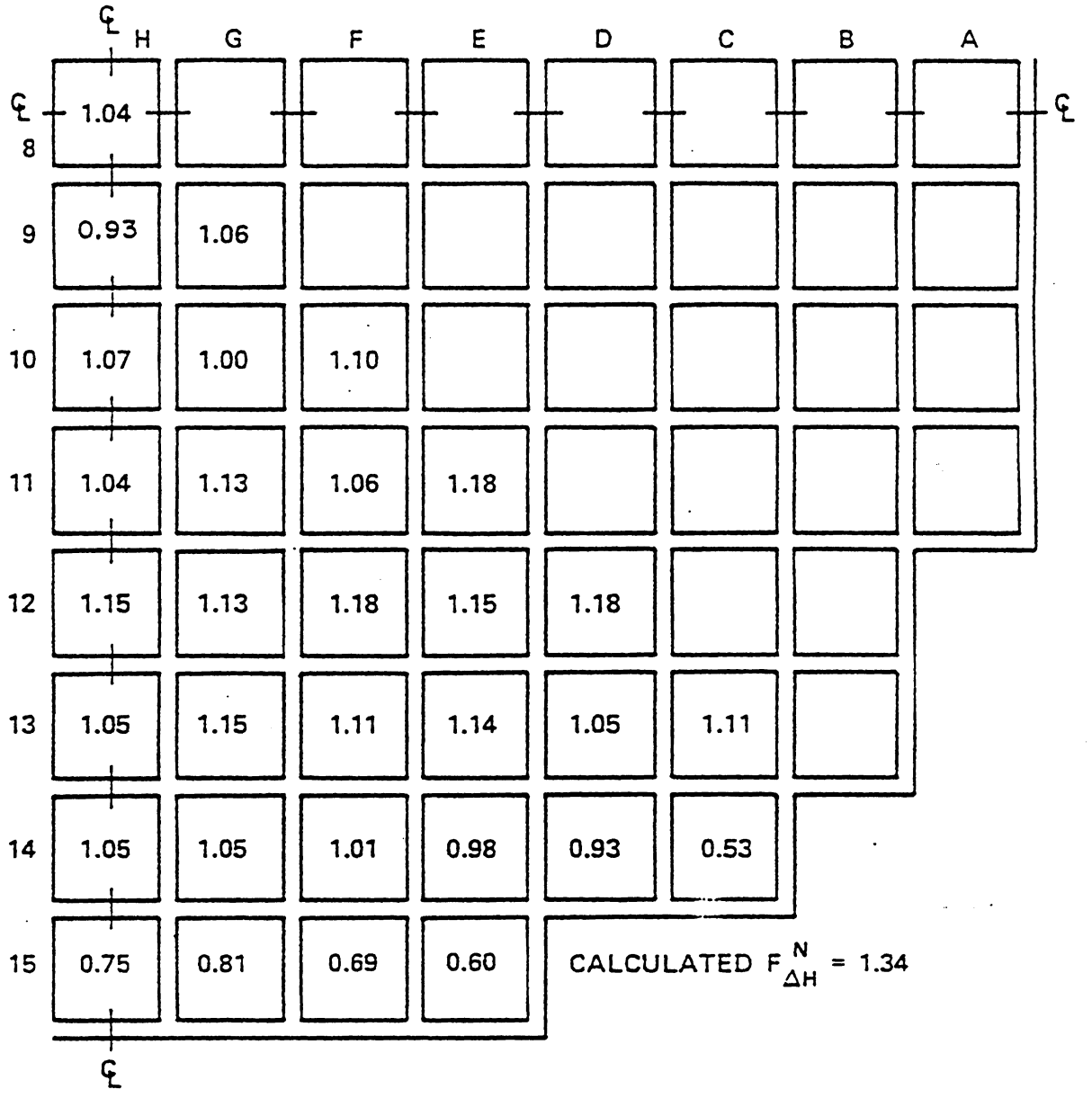

KEY:

VALUE REPRESENTS ASSEMBLY RELATIVE POWER

TYPICAL FIGURE

Figure 4.3.2-6. Normalized Power Density Distribution Near Beginning of Life, Unrodded Core, Hot Full Power, No Xenon

	H	G	F	E	D	C	B	A
8	1.10							
9	0.98	1.10						
10	1.11	1.03	1.12					
11	1.05	1.14	1.07	1.18				
12	1.17	1.14	1.19	1.14	1.17			
13	1.05	1.15	1.10	1.13	1.03	1.07		
14	1.04	1.04	1.01	0.96	0.90	0.52		
15	0.73	0.80	0.67	0.59				

CALCULATED $F^N_{\Delta H}$ = 1.29

KEY:

VALUE REPRESENTS ASSEMBLY RELATIVE POWER

TYPICAL FIGURE

Figure 4.3.2-7. Normalized Power Density Distribution Near Beginning of Life, Unrodded Core, Hot Full Power, Equilibrium Xenon

	H	G	F	E	D	C	B	A
8	0.93							
9	0.94	1.09						
10	1.10	1.03	1.13					
11	1.01	1.13	1.07	1.16				
12	0.99	1.10	1.19	1.10	0.99			
13	1.03	1.17	1.13	1.13	0.98	1.04		
14	1.09	1.10	1.06	0.10	0.91	0.51		
15	0.79	0.87	0.73	0.63				

CALCULATED $F^N_{\Delta H} = 1.27$

KEY:
VALUE REPRESENTS ASSEMBLY
RELATIVE POWER

TYPICAL FIGURE

Figure 4.3.2-8. Normalized Power Density Distribution Near Beginning of Life, Group D 30% Inserted, Hot Full Power, Equilibrium Xenon

Figure 4.3.2-9 deleted by Amendment 6

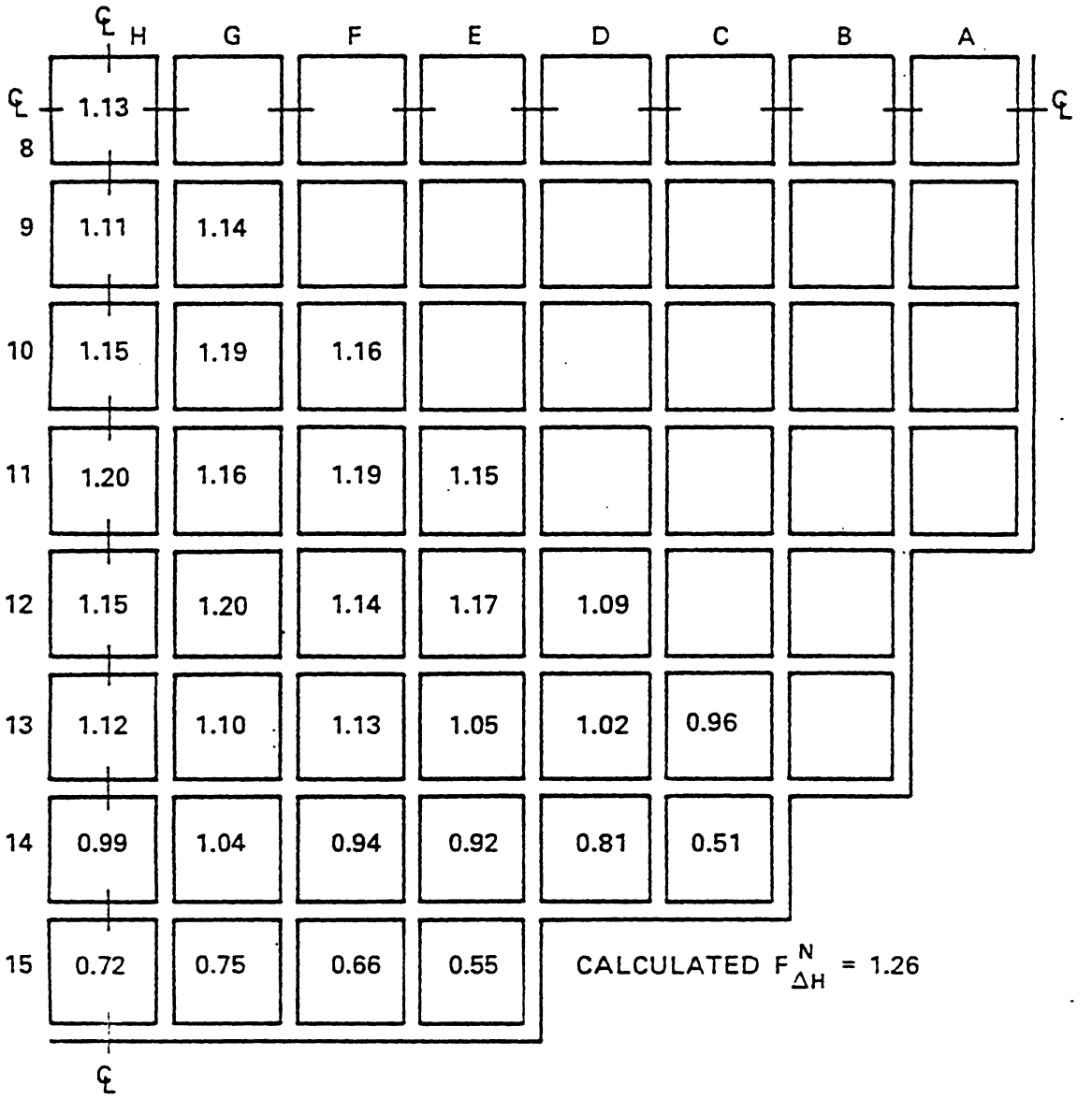

KEY:
VALUE REPRESENTS ASSEMBLY
RELATIVE POWER

TYPICAL FIGURE

Figure 4.3.2-10. Normalized Power Density Distribution Near Middle of Life, Unrodded Core, Hot Full Power, Equilibrium Xenon

	H	G	F	E	D	C	B	A
8	1.03							
9	1.03	1.06						
10	1.08	1.14	1.08					
11	1.15	1.09	1.16	1.09				
12	1.09	1.16	1.09	1.16	1.07			
13	1.14	1.08	1.14	1.05	1.07	1.00		
14	1.01	1.08	0.98	0.97	0.85	0.56		
15	0.79	0.81	0.74	0.60				

CALCULATED $F^N_{\Delta H}$ = 1.19

KEY:
VALUE REPRESENTS ASSEMBLY
RELATIVE POWER

TYPICAL FIGURE

Figure 4.3.2-11. Normalized Power Density Distribution Near End of Life, Unrodded Core, Hot Full Power, Equilibrium Xenon

1.06																
1.03	1.03															
1.05	1.06	1.09														
1.05	1.08	1.13	X													
1.06	1.09	1.14	1.16	1.15												
1.06	1.11	X	1.16	1.17	X											
1.06	1.09	1.14	1.13	1.14	1.17	1.15										
1.06	1.09	1.14	1.13	1.14	1.17	1.15	1.15									
1.07	1.11	X	1.15	1.16	X	1.17	1.17	X								
1.06	1.10	1.14	1.13	1.14	1.17	1.15	1.15	1.11	1.15							
1.06	1.09	1.14	1.14	1.14	1.17	1.15	1.15	1.17	1.15	1.15						
1.06	1.11	X	1.16	1.17	X	1.17	1.17	X	1.17	1.17	X					
1.06	1.08	1.14	1.16	1.15	1.17	1.14	1.14	1.16	1.14	1.14	1.17	1.15				
1.05	1.08	1.13	X	1.16	1.16	1.13	1.13	1.15	1.13	1.13	1.16	1.16	X			
1.05	1.06	1.08	1.12	1.13	X	1.13	1.13	X	1.13	1.13	X	1.13	1.12	1.07		
1.04	1.04	1.05	1.06	1.07	1.09	1.07	1.07	1.09	1.07	1.07	1.07	1.07	1.06	1.04	1.03	
1.04	1.03	1.02	1.02	1.02	1.02	1.02	1.02	1.02	1.02	1.02	1.02	1.02	1.02	1.02	1.02	1.02

Figure 4.3.2-12 Rodwise Power Distribution in a Typical Assembly (Assembly G-9) Near Beginning of Life, Hot Full Power, Equilibrium Xenon, Unrodded Core

0.99																
0.99	0.99															
0.99	1.00	1.02														
1.00	1.02	1.06	X													
1.01	1.03	1.08	1.10	1.08												
1.02	1.06	X	1.10	1.10	X											
1.02	1.04	1.08	1.06	1.07	1.09	1.07										
1.02	1.04	1.08	1.06	1.07	1.10	1.07	1.07									
1.03	1.06	X	1.09	1.09	X	1.10	1.10	X								
1.03	1.05	1.08	1.07	1.07	1.10	1.08	1.08	1.10	1.08							
1.03	1.05	1.09	1.07	1.08	1.10	1.08	1.08	1.11	1.08	1.09						
1.03	1.07	X	1.11	1.11	X	1.11	1.11	X	1.11	1.11	X					
1.03	1.05	1.04	1.11	1.10	1.11	1.08	1.08	1.11	1.09	1.09	1.12	1.11				
1.02	1.03	1.08	X	1.11	1.11	1.08	1.08	1.10	1.08	1.04	1.12	1.12	X			
1.01	1.02	1.04	1.07	1.10	X	1.04	1.09	X	1.10	1.10	X	1.11	1.09	1.05		
1.00	1.00	1.01	1.03	1.04	1.07	1.05	1.05	1.07	1.05	1.05	1.06	1.05	1.04	1.02	1.01	
1.00	0.99	0.99	1.00	1.01	1.02	1.02	1.02	1.02	1.02	1.02	1.03	1.02	1.01	1.00	1.00	1.00

Figure 4.3.2-13 Rodwise Power Distribution in a Typical Assembly (G-9) Near End of Life, Hot Full Power, Equilibrium Xenon, Unrodded Core

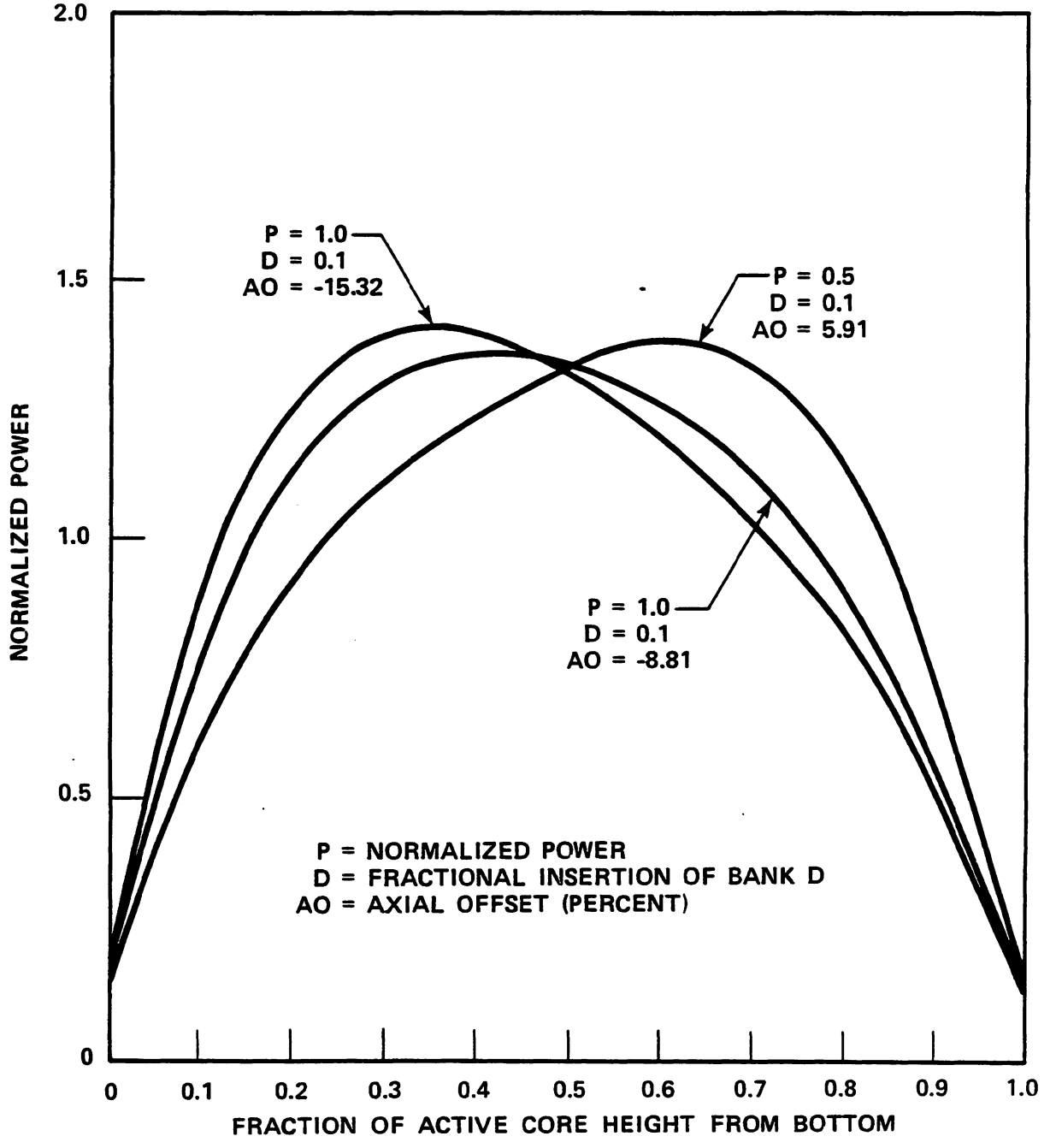

Figure 4.3.2-14. Typical Axial Power Shapes Occurring at Beginning-of-Life

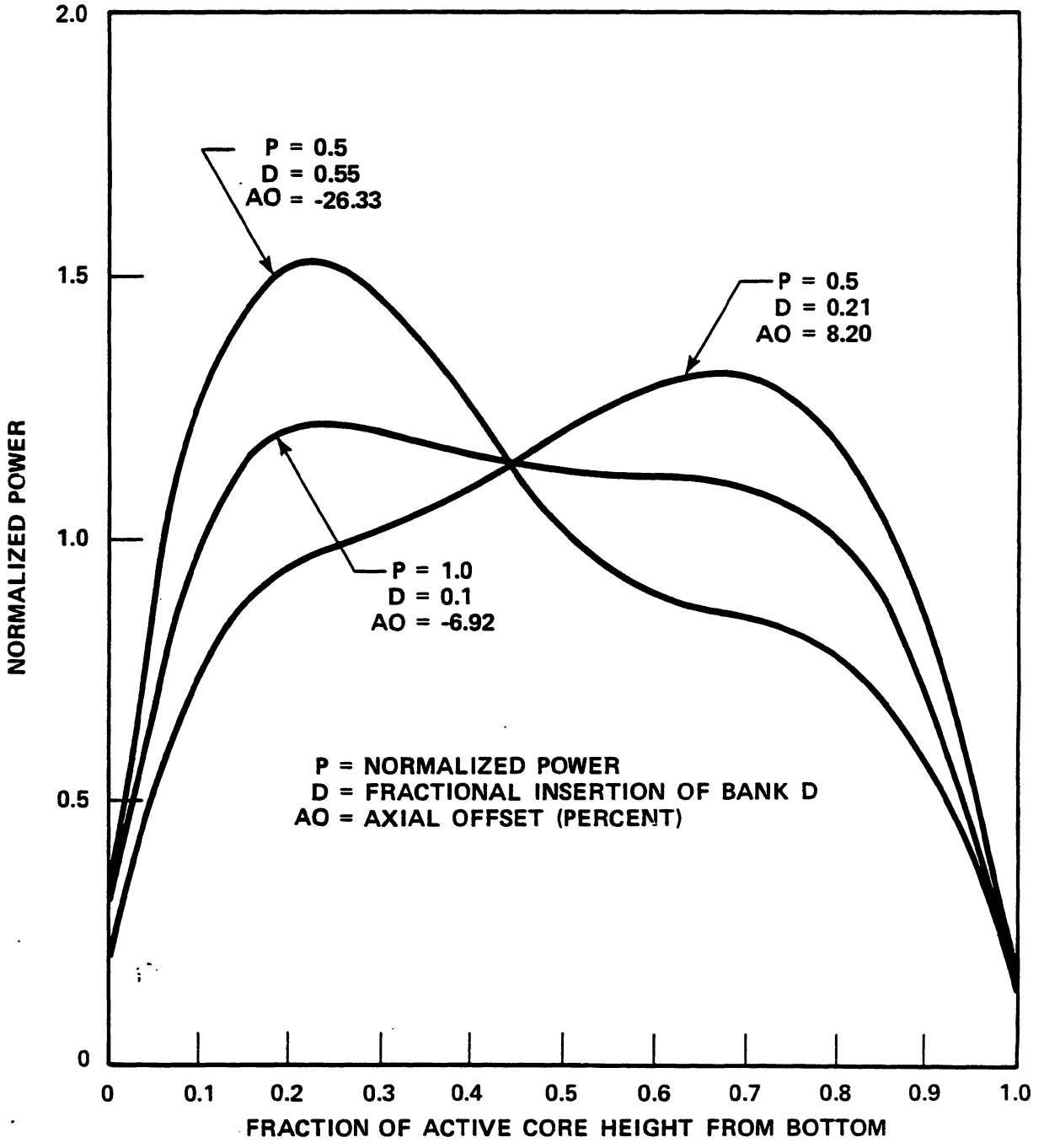

Figure 4.3.2-15. Typical Axial Power Shapes Occurring at Middle-of-Life

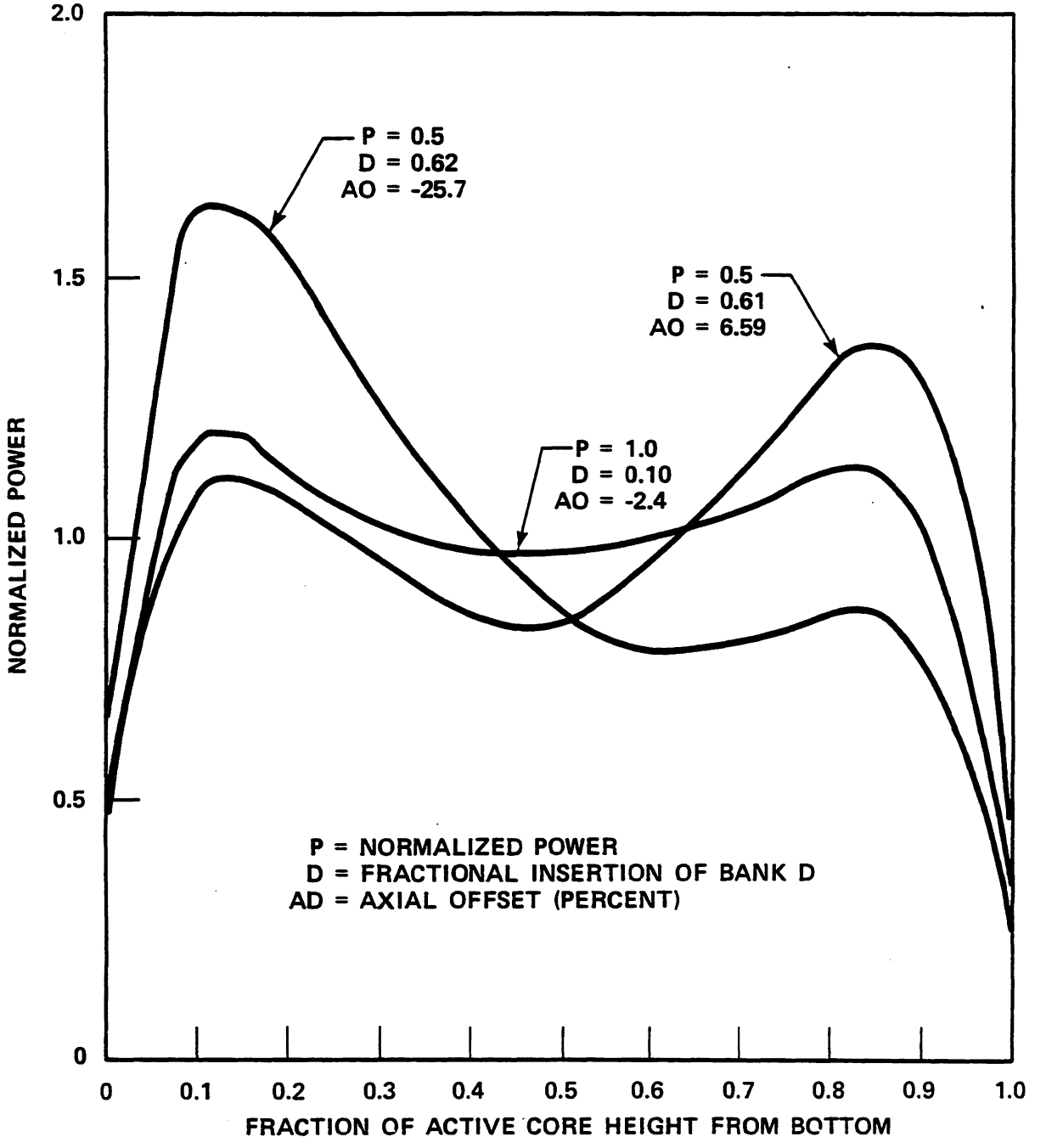

Figure 4.3.2-16. Typical Axial Power Shapes Occurring at End-of-Life

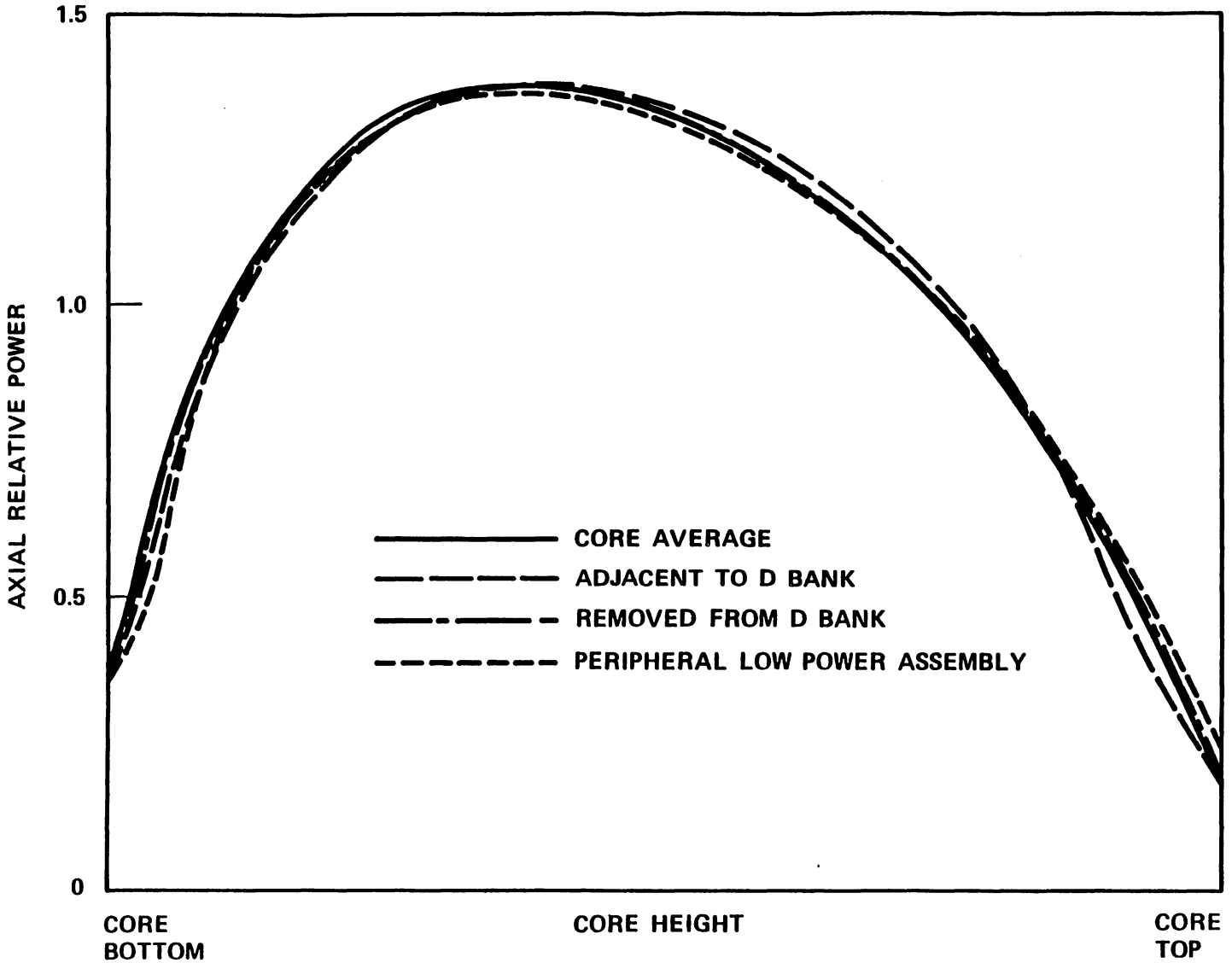

Figure 4.3.2-17. Comparison of a Typical Assembly Axial Power Distribution With Core Average Axial Distribution Bank D Slightly Inserted

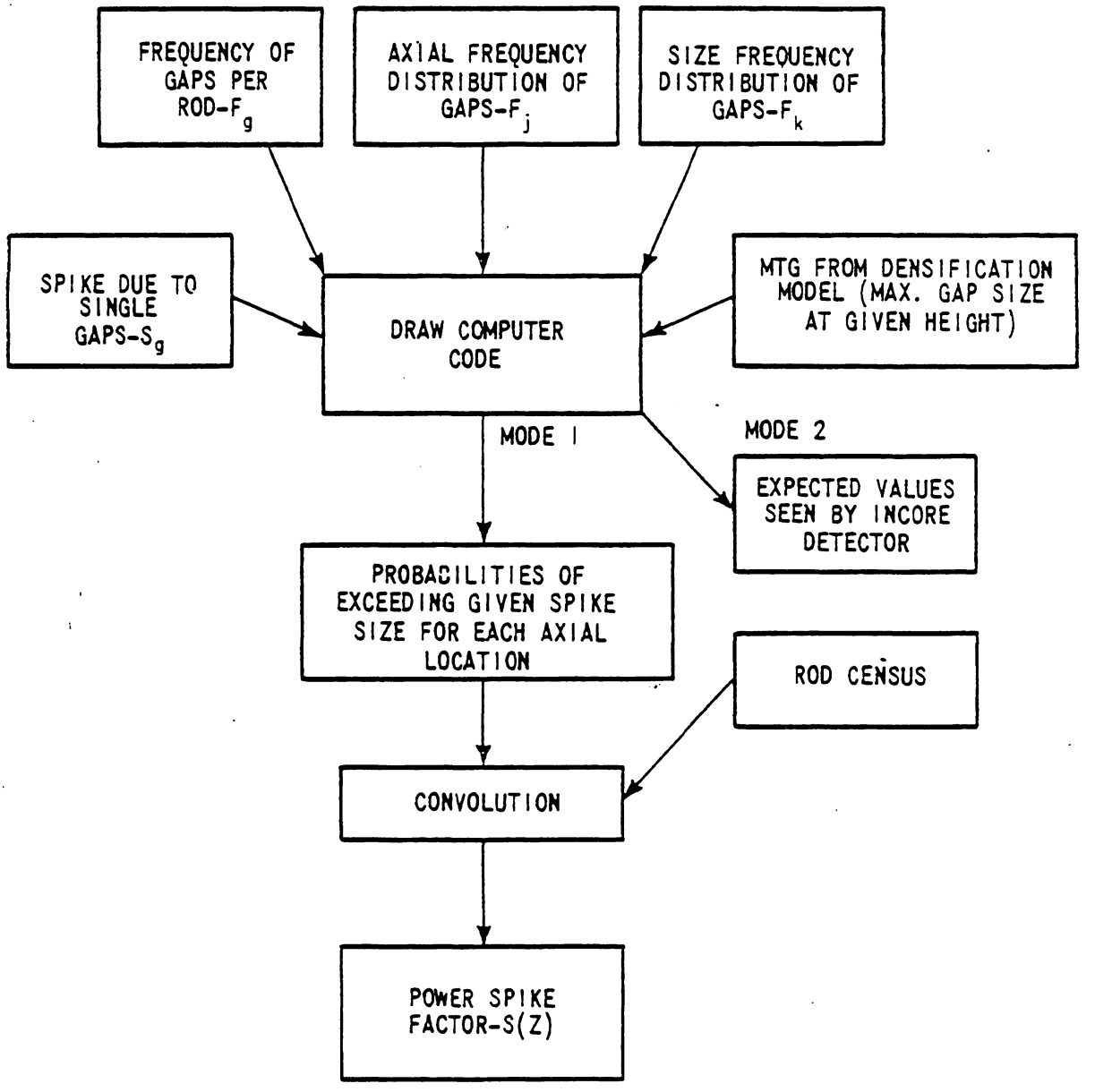

Figure 4.3.2-18 Flow Chart for Determining Spike Model

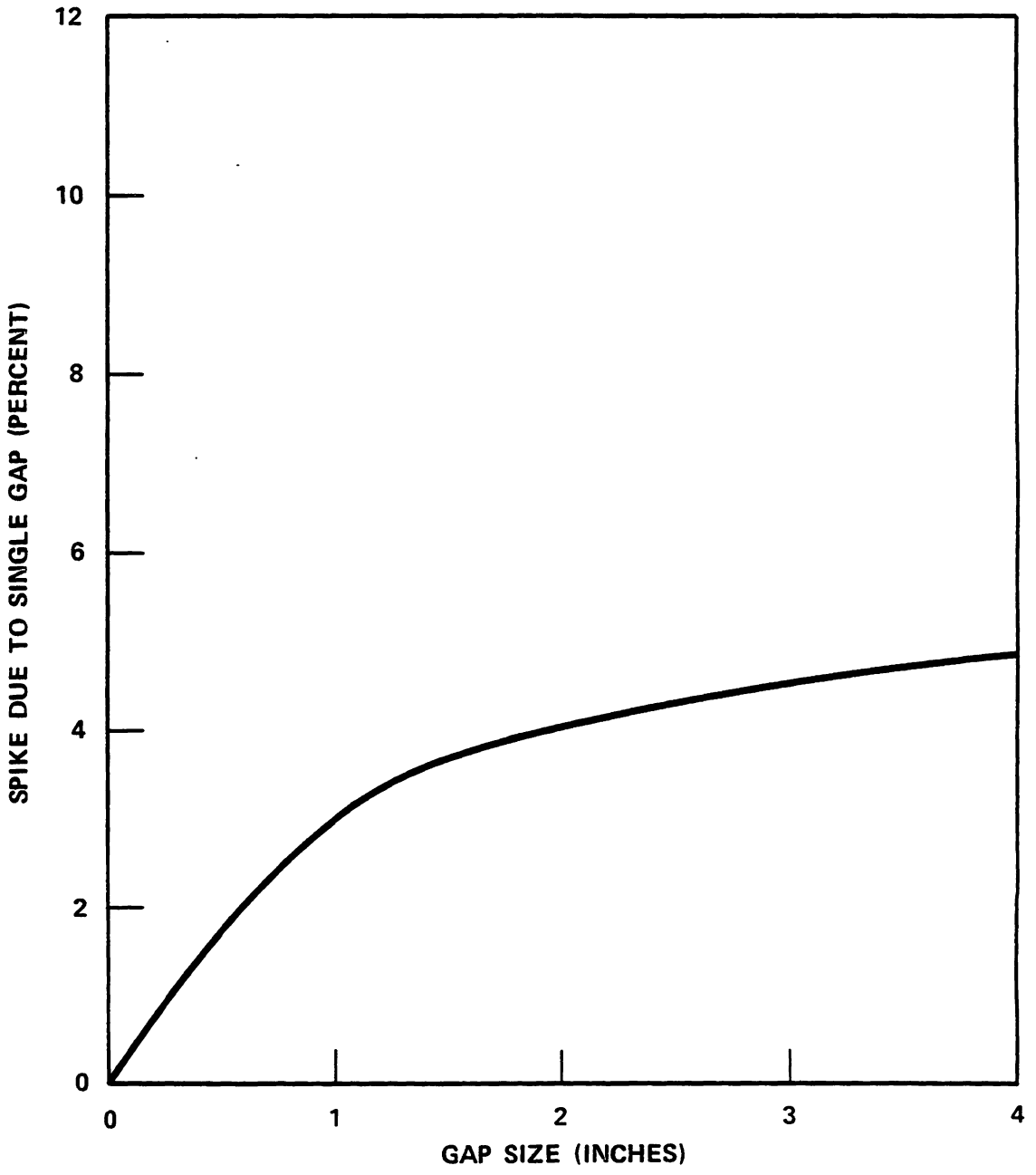

Figure 4.3.2-19. Predicted Power Spike Due to Single Nonflattened Gap in the Adjacent Fuel

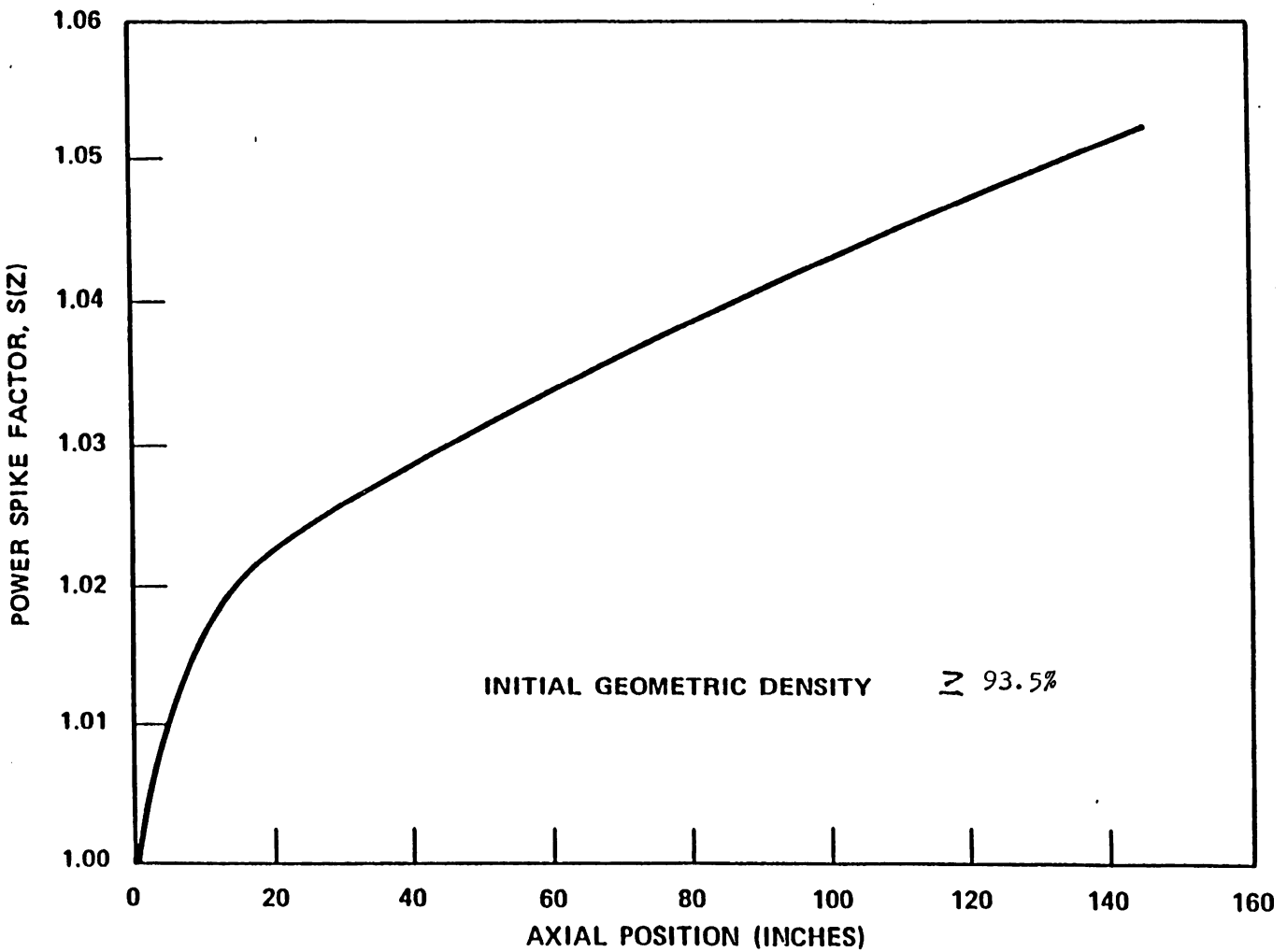

Figure 4.3.2-20. Power Spike Factor as a Function of Axial Position

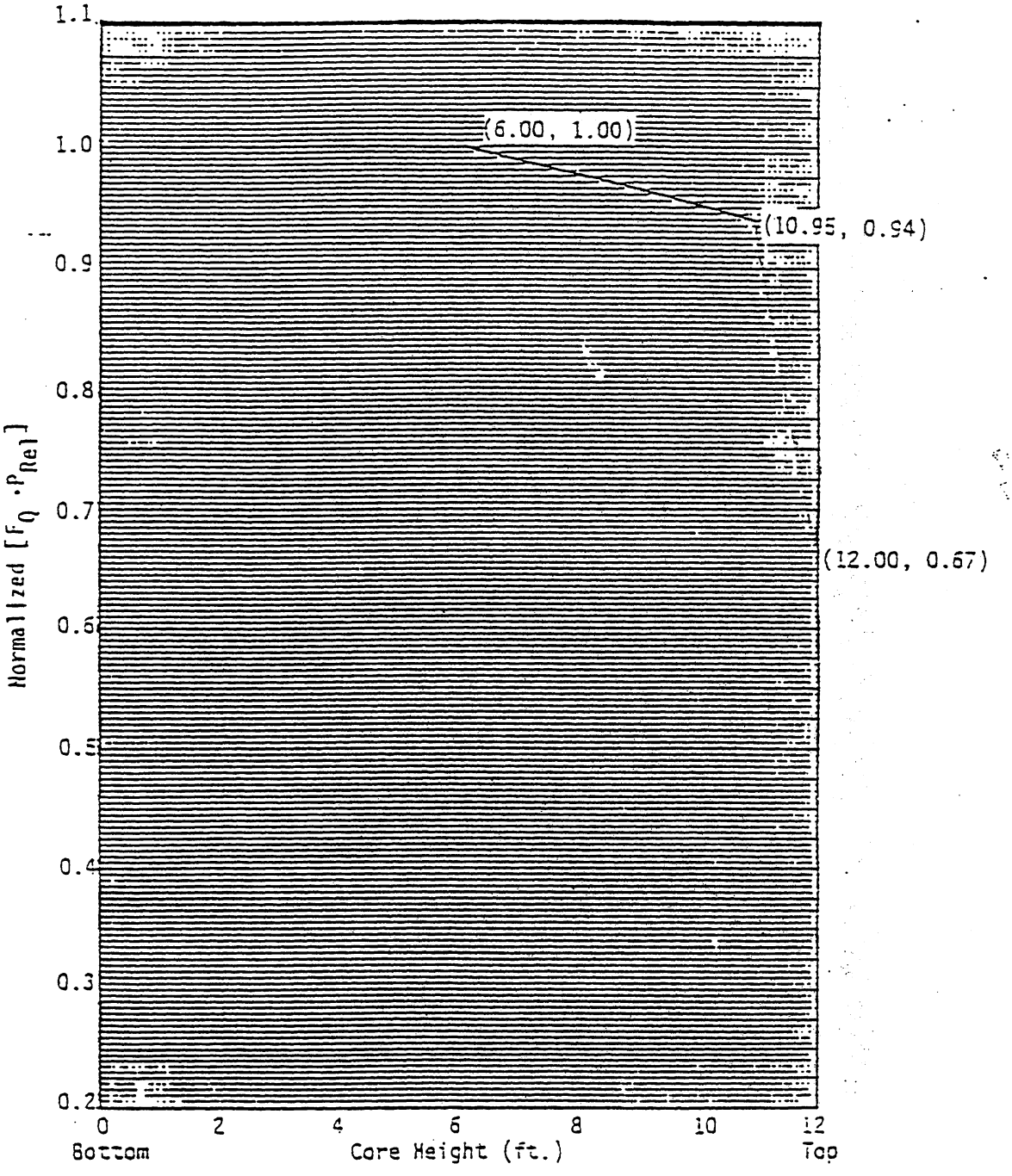

Figure 4.3.2-21 Typical Normalized Maximum F_Q X Power versus Axial Height During Normal Operation

13

REVISED BY AMENDMENT 13

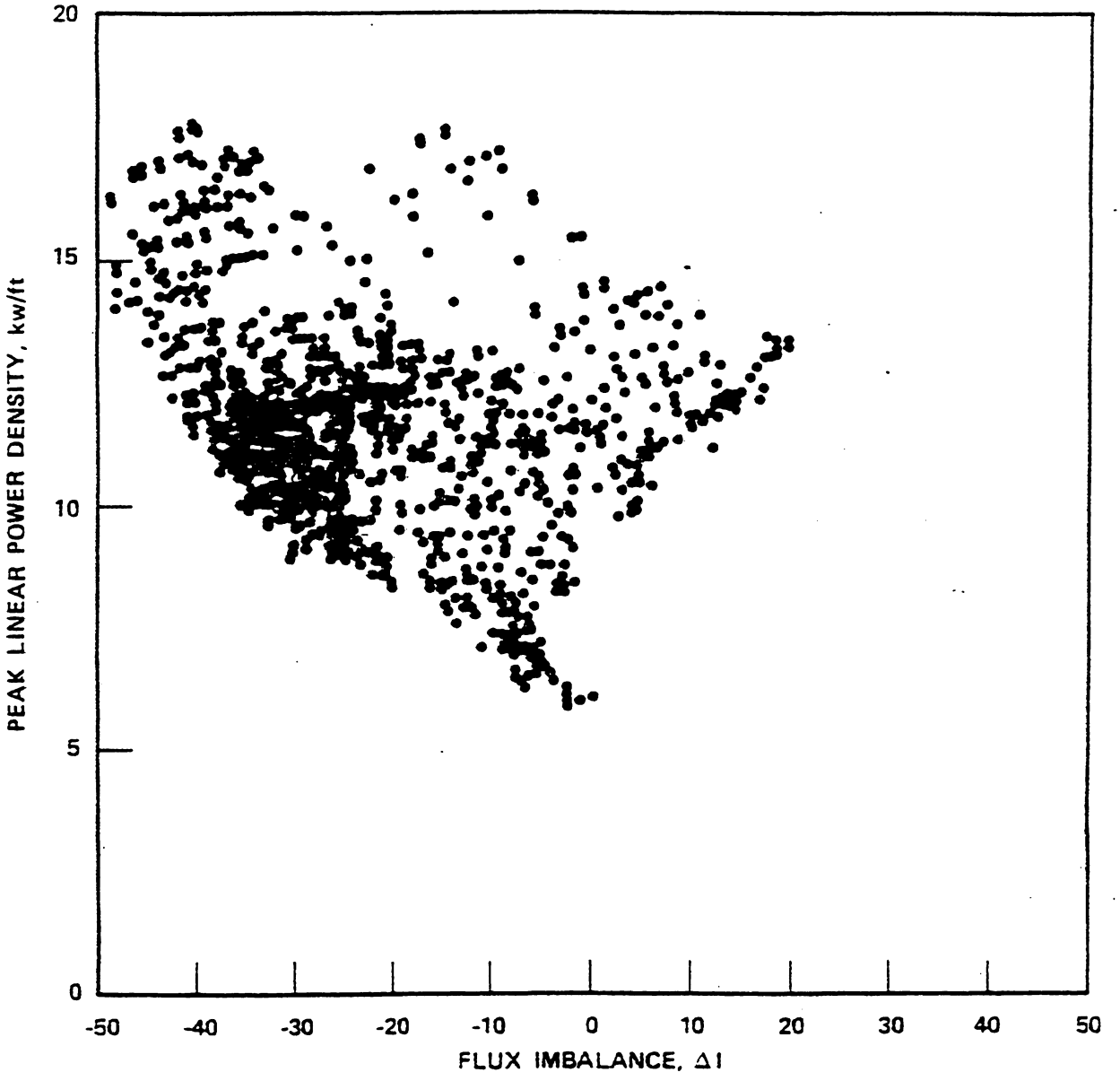

Figure 4.3.2-22 Typical Peak Power Density During Control Rod Malfunction Overpower Transients 13

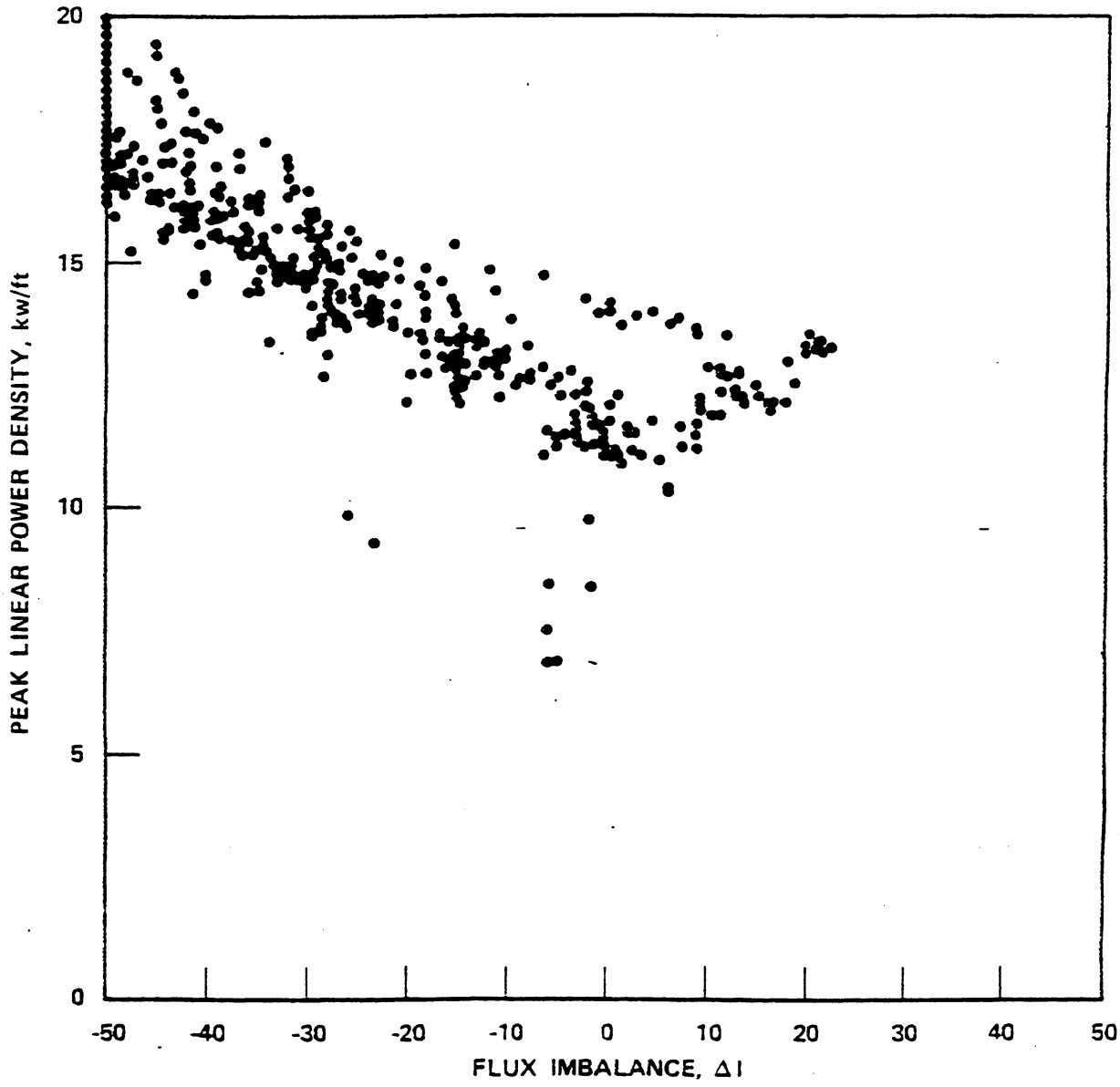

Figure 4.3.2-23 Typical Peak Power Density During Boration/Dilution Overpower Transients

Best Available Historical Image

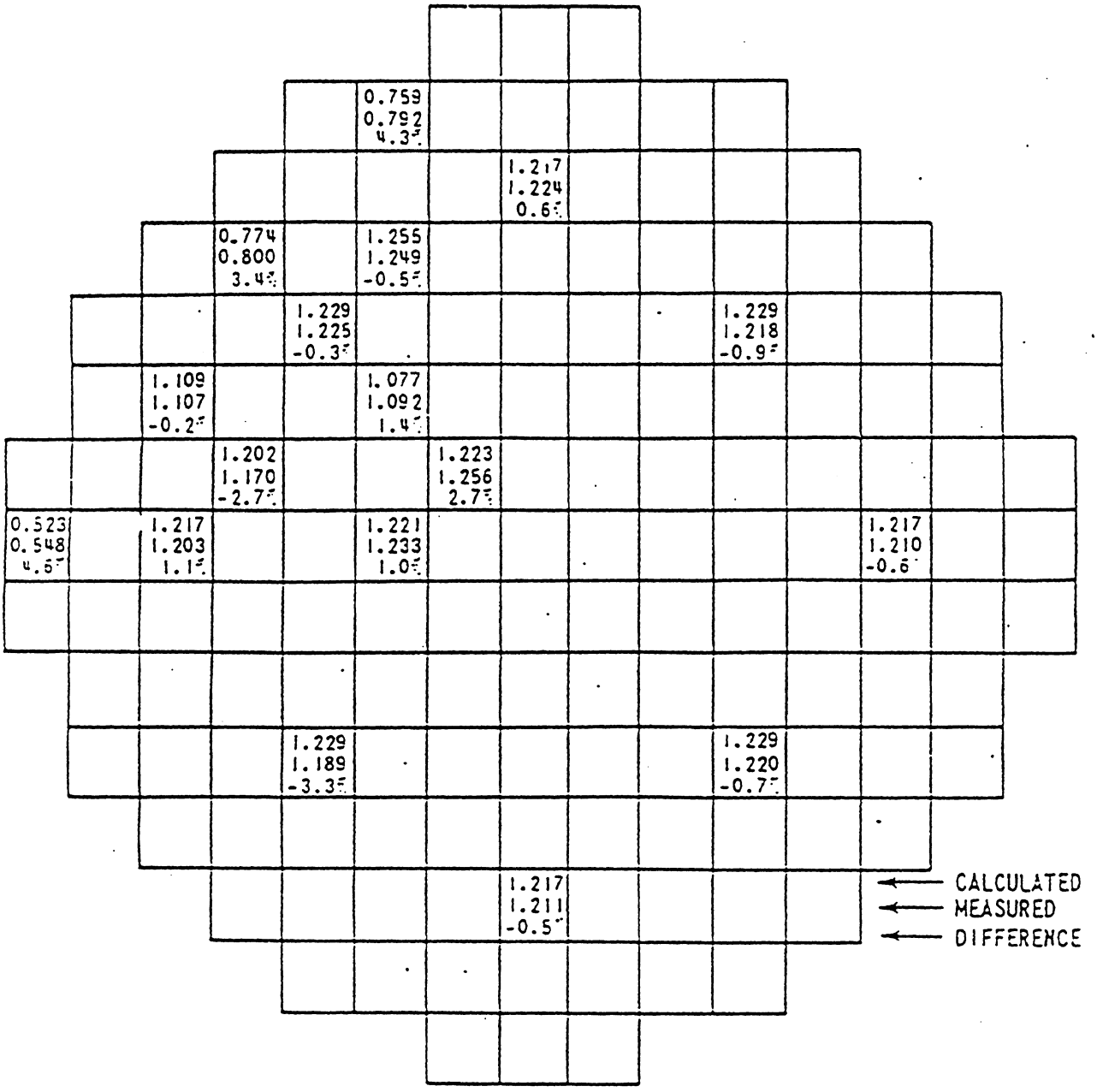

PEAKING FACTORS

$\bar{F}_z$ = 1.5

$F^N_{\Delta H}$ = 1.357

F^N_Q = 2.07

TYPICAL FIGURE

Figure 4.3.2-24 Comparison Between Calculated and Measured Relative Fuel Assembly Power Distribution

REVISED BY AMENDMENT 10

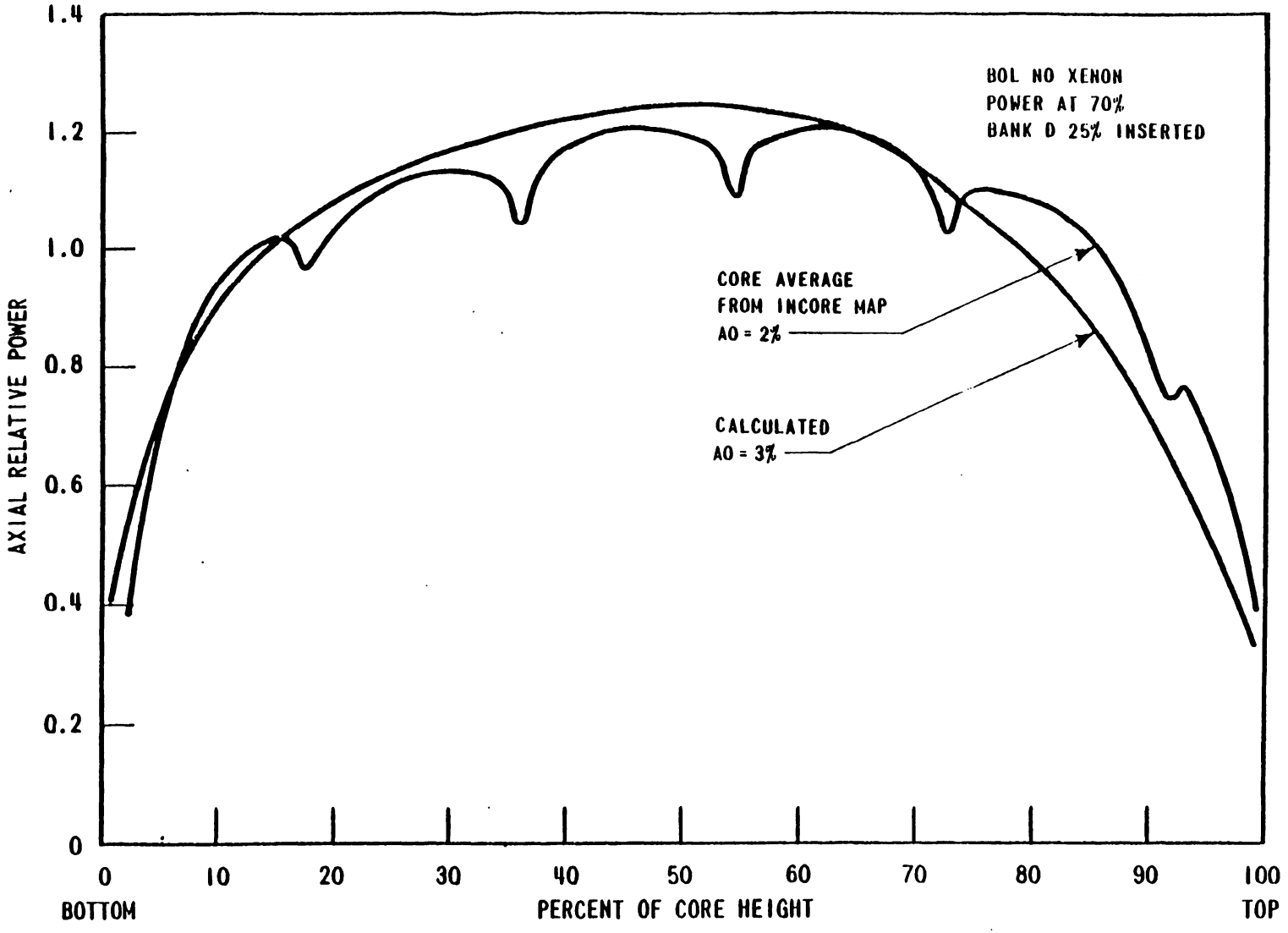

Figure 4.3.2-25 Comparison of Typical Calculated and Measured Axial Shape

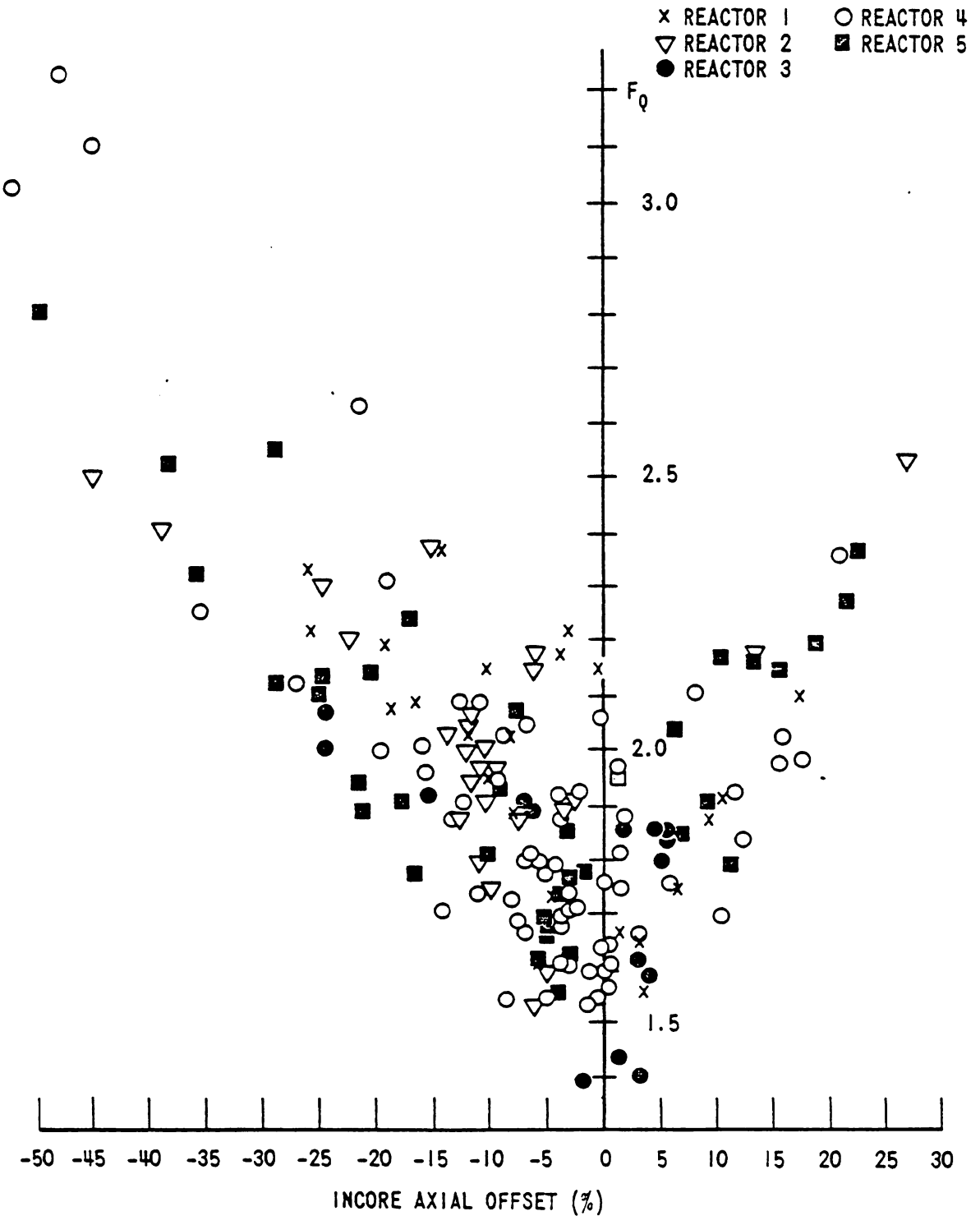

Figure 4.3.2-26 Measured Values of F_Q for Full Power Rod Configurations

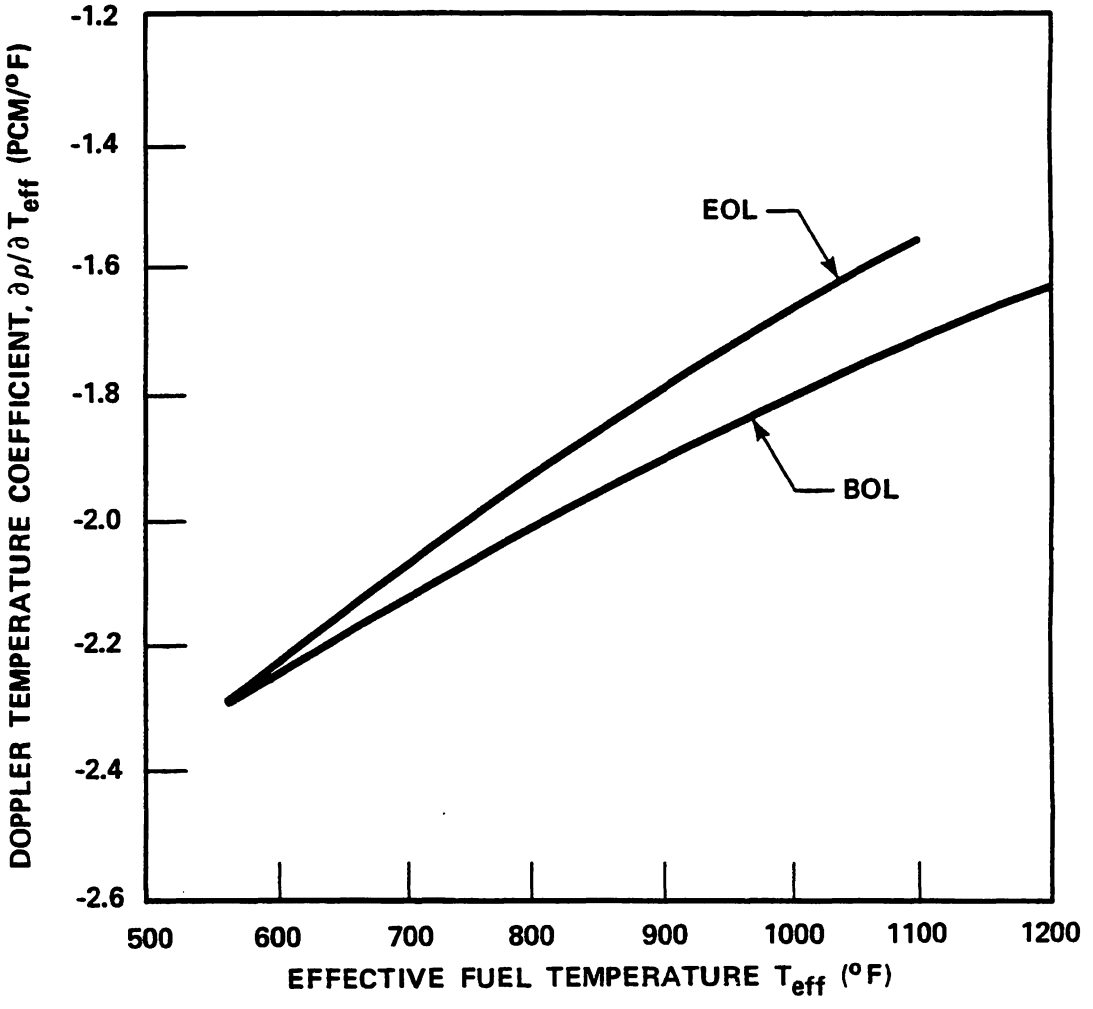

Figure 4.3.2-27. Typical Doppler Temperature Coefficient at BOL and EOL Cycle 1

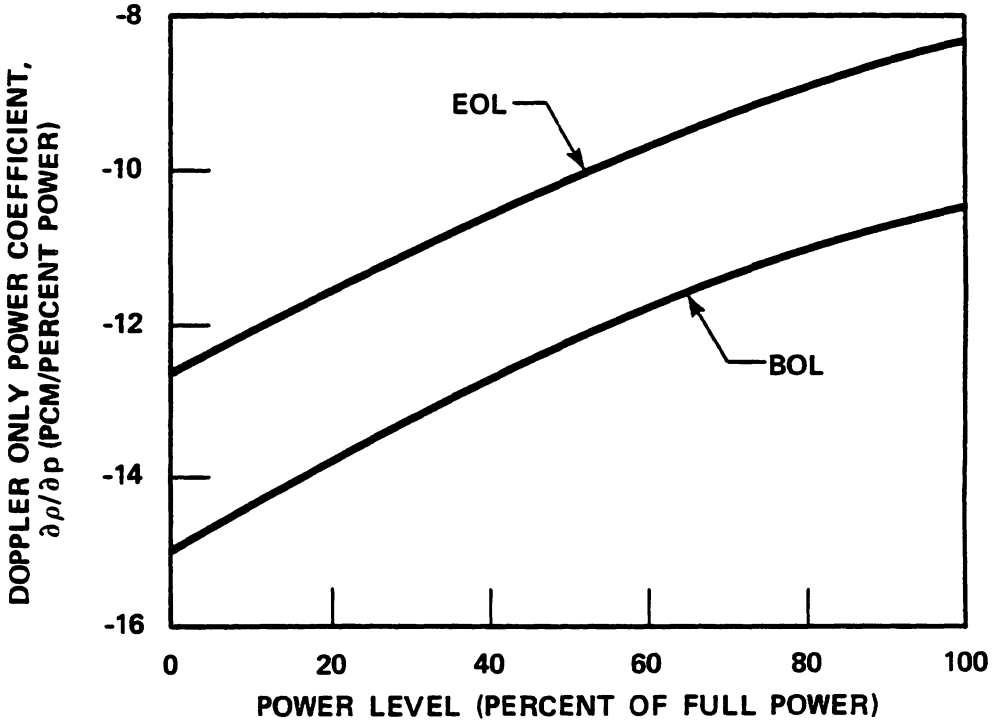

Figure 4.3.2-28. Typical Doppler-Only Power Coefficient—BOL, EOL, Cycle 1

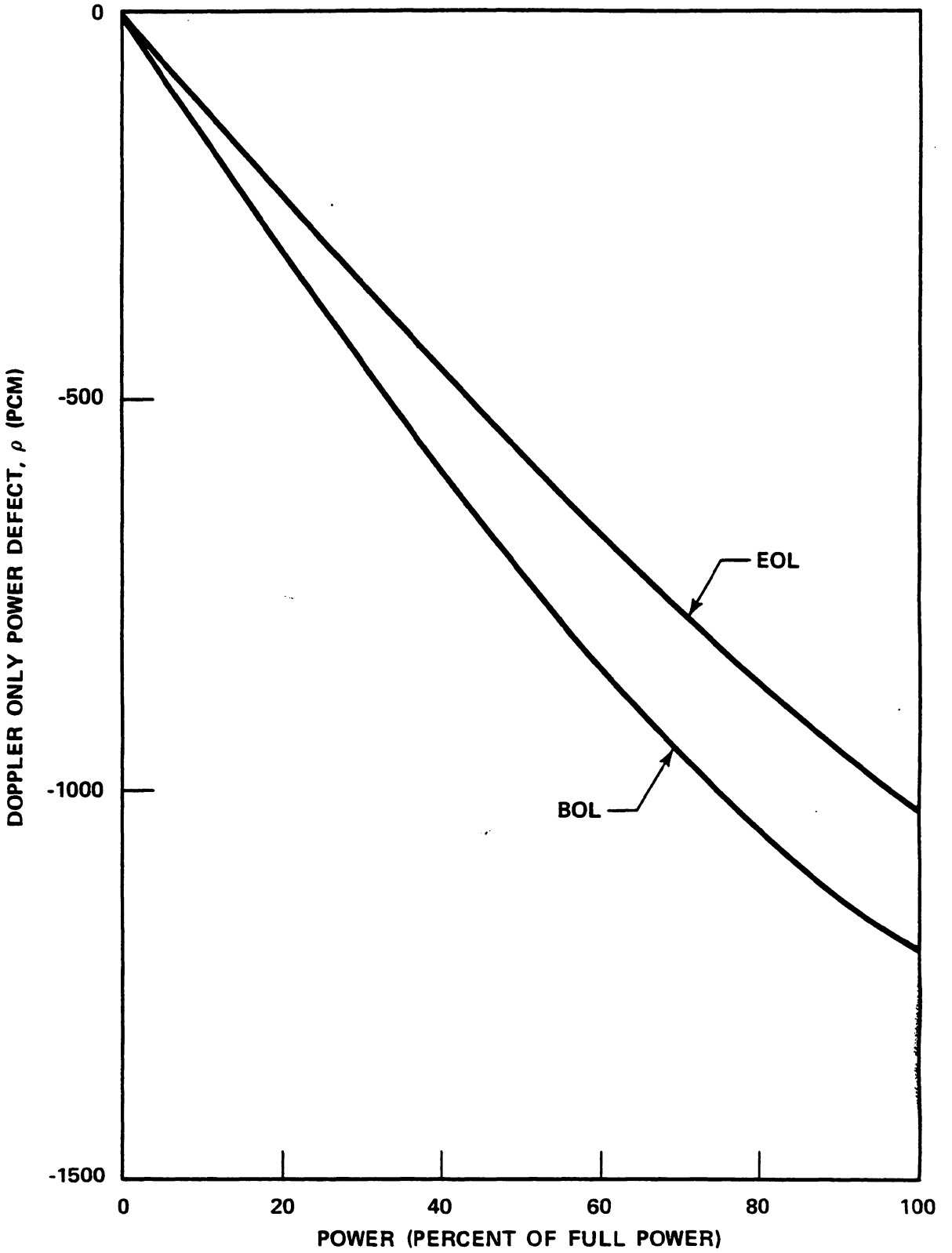

Figure 4.3.2-29. Typical Doppler - Only Power Defect BOL and EOL Cycle 1

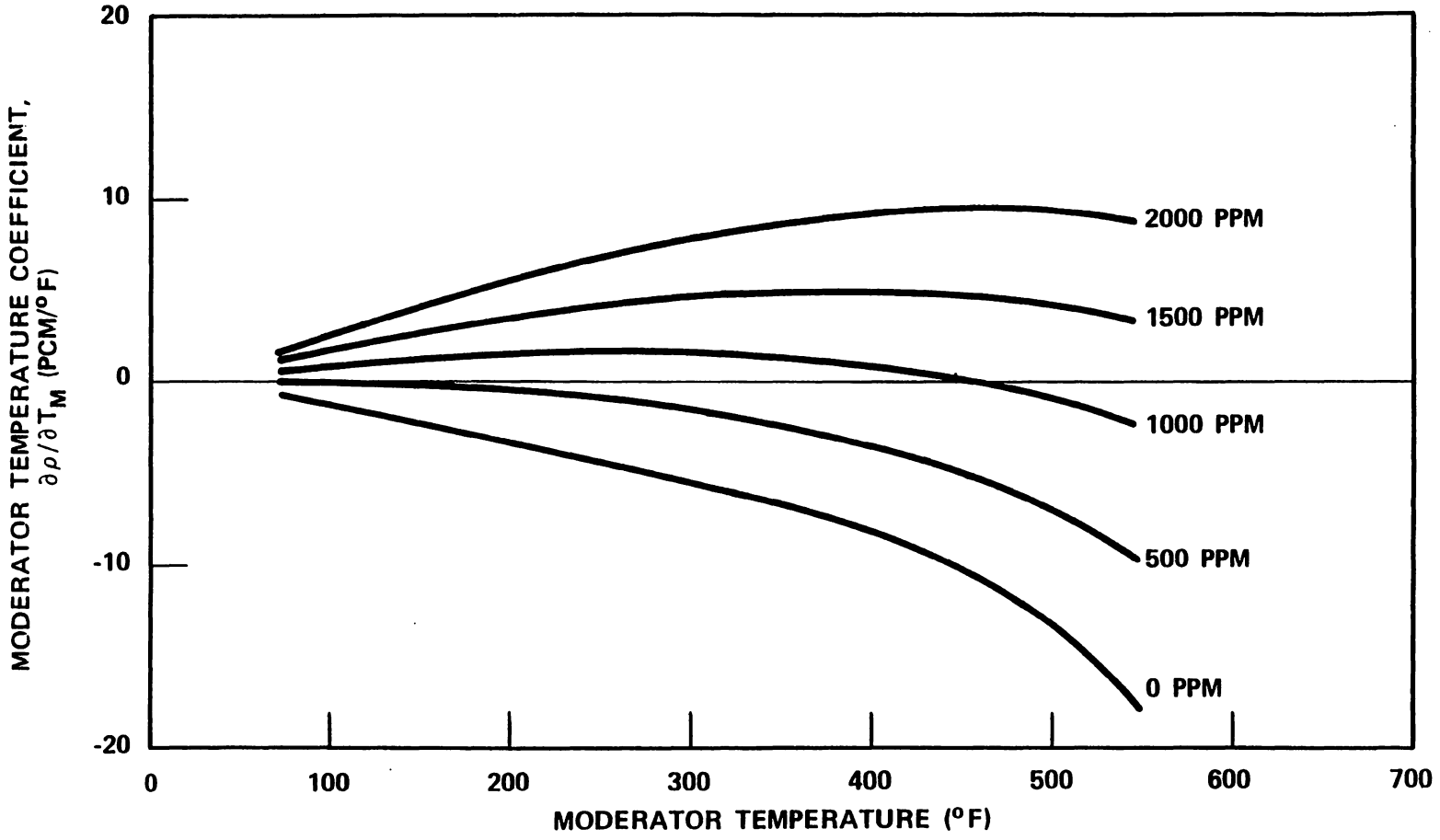

Figure 4.3.2-30. Typical Moderator Temperature Coefficient – BOL, Cycle 1, No Rods

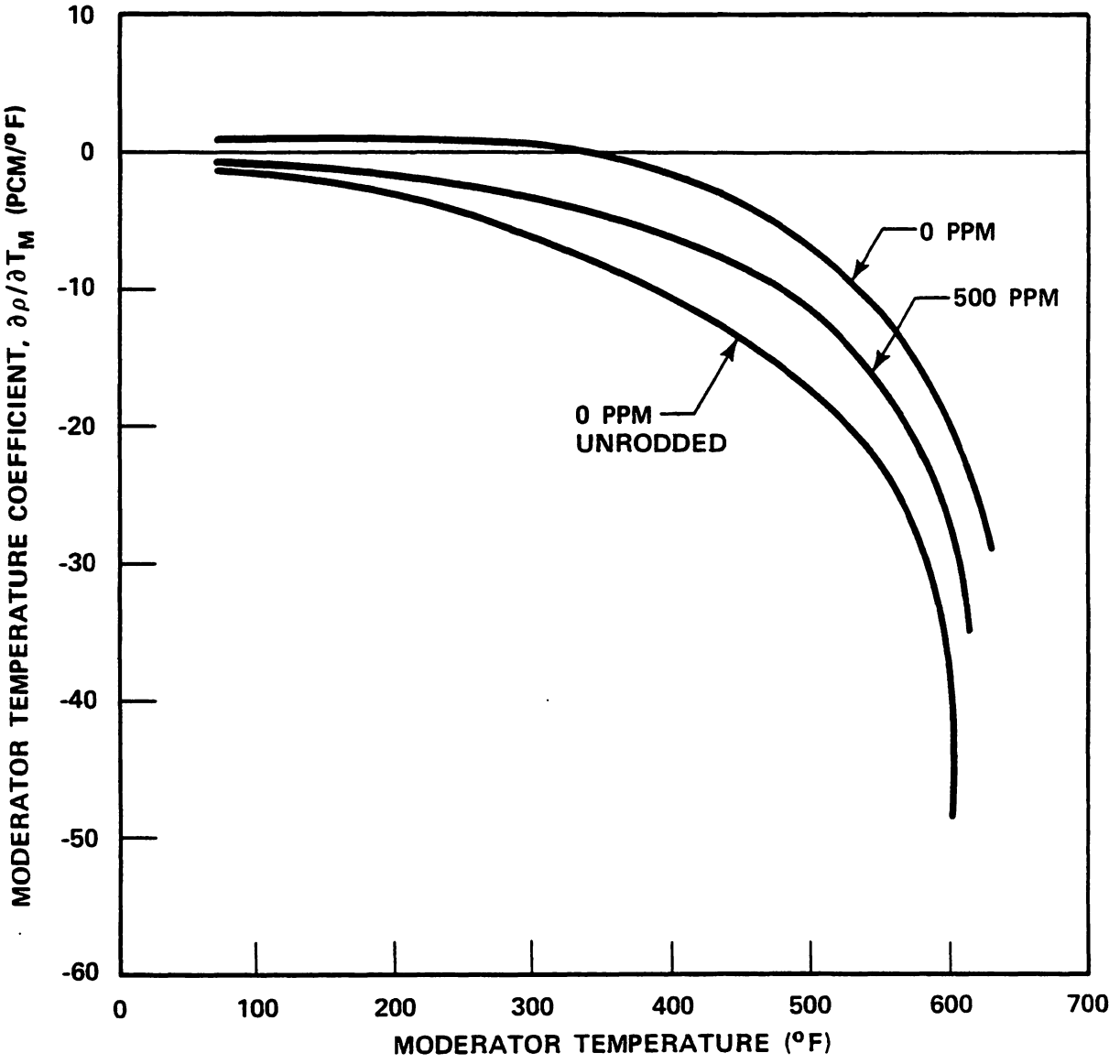

Figure 4.3.2-31. Typical Moderator Temperature Coefficient – EOL, Cycle 1

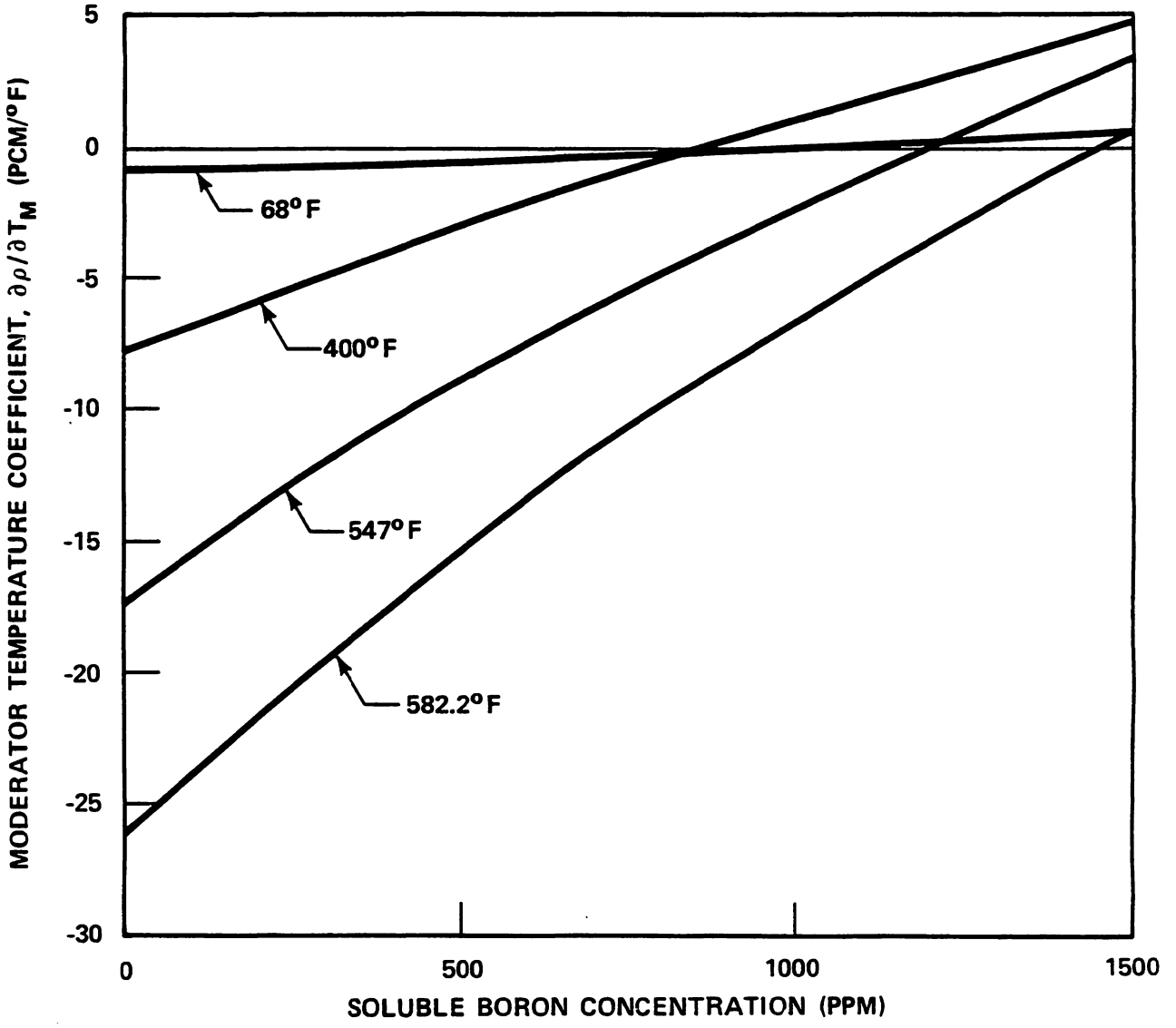

Figure 4.3.2-32. Typical Moderator Temperature Coefficient as a Function of Boron Concentration — BOL Cycle 1, No Rods

Best Available Historical Image

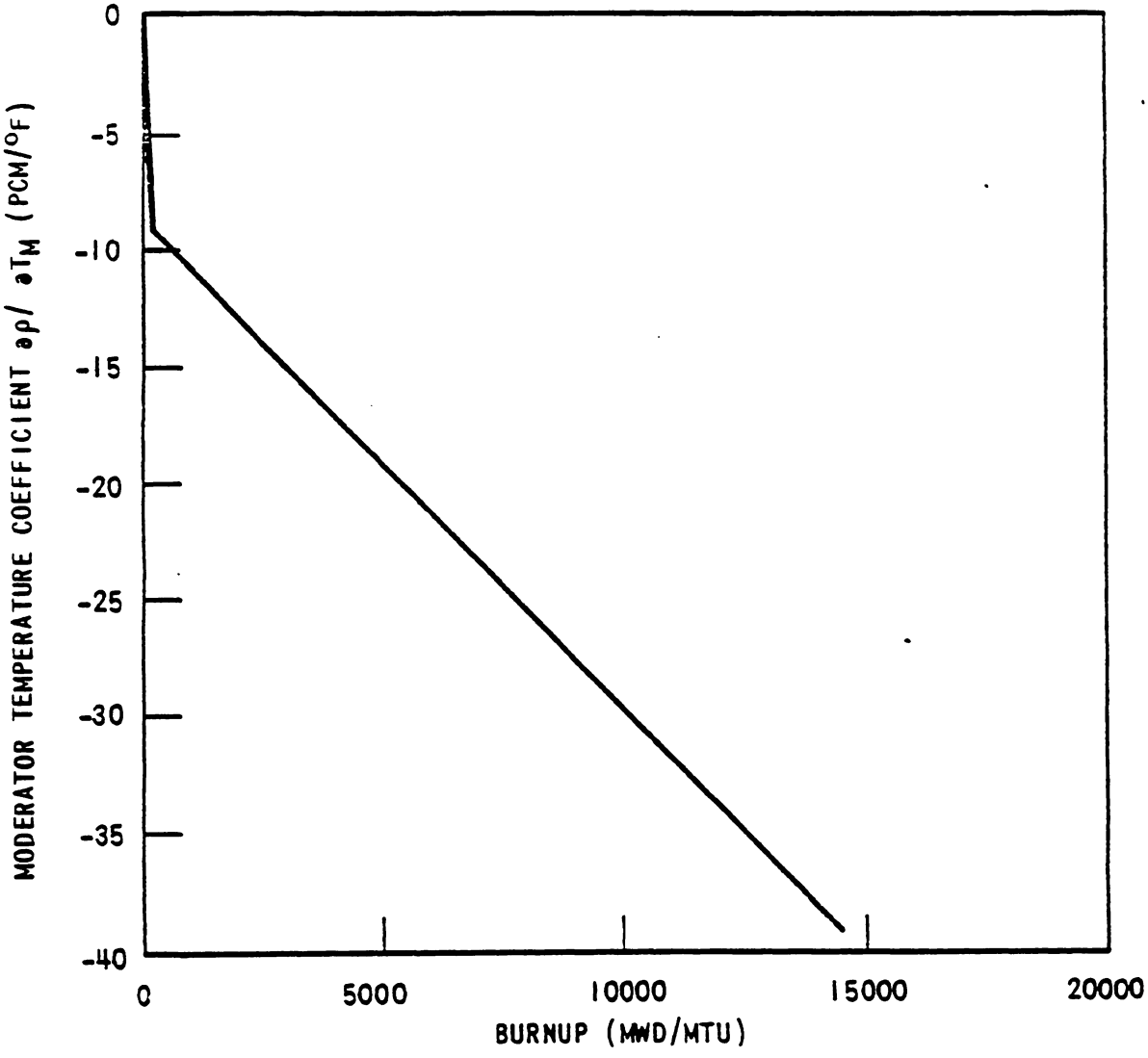

Figure 4.3.2-33 Typical Hot Full Power Temperature Coefficient During Cycle 1 for the Critical Boron Concentration

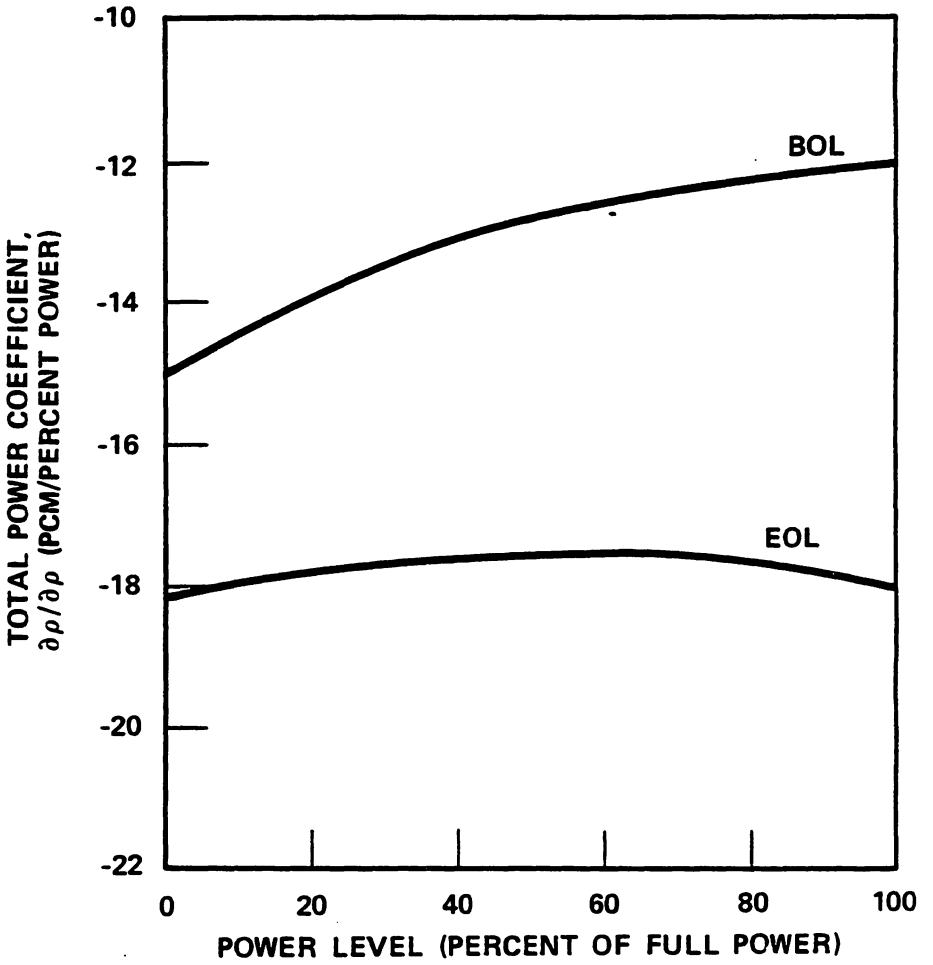

Figure 4.3.2-34. Typical Total Power Coefficient—BOL, EOL, Cycle 1

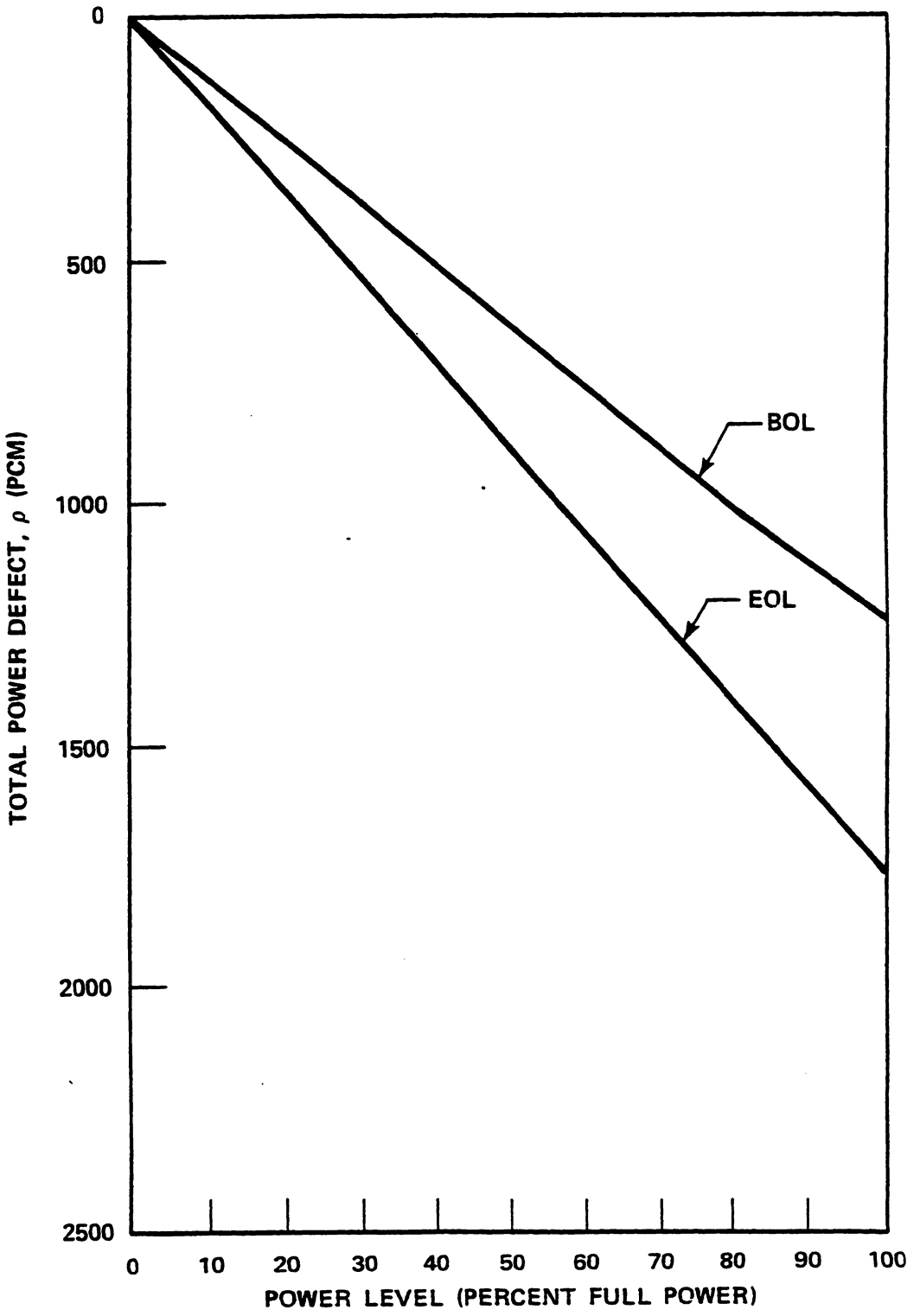

Figure 4.3.2-35. Typical Total Power Defect BOL, EOL, Cycle 1

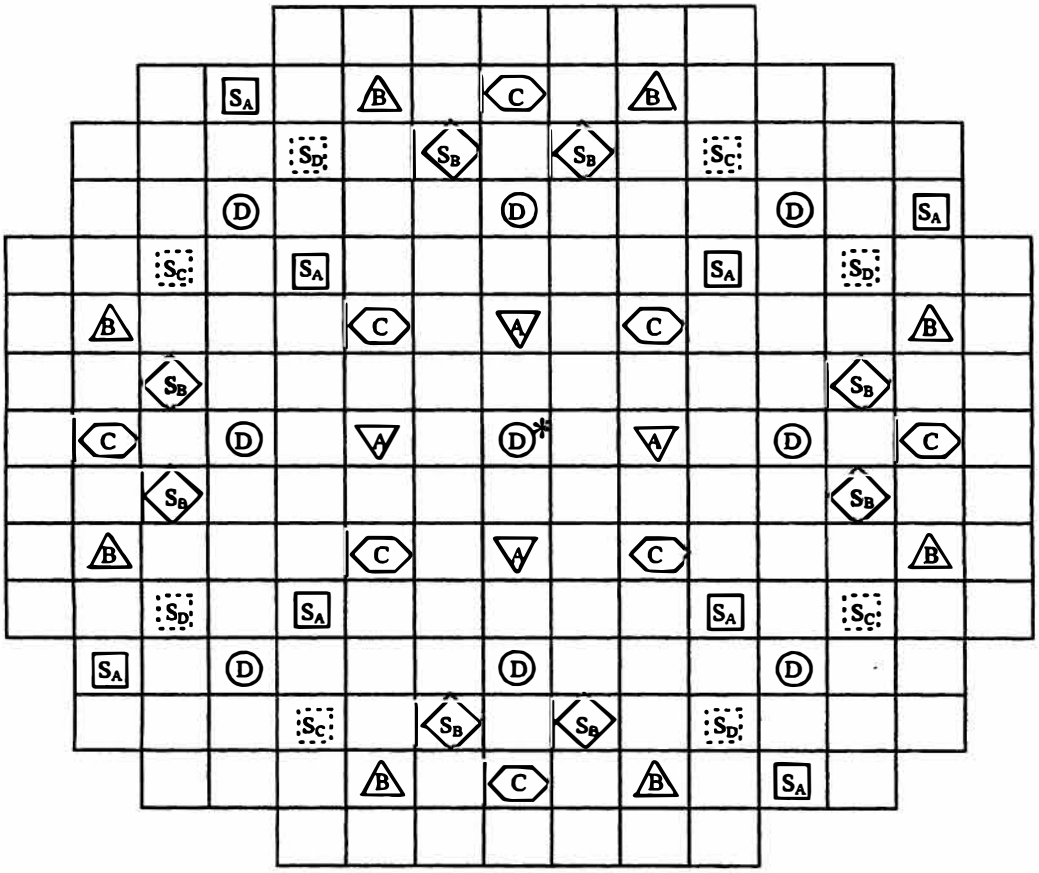

	FUNCTION	NUMBER OF ROD CLUSTERS
SHUTDOWN BANK	S_A	8
SHUTDOWN BANK	S_B	8
SHUTDOWN BANK	S_C	4
SHUTDOWN BANK	S_D	4
CONTROL BANK	A	4
CONTROL BANK	B	8
CONTROL BANK	C	8
CONTROL BANK	D	9*

Figure 4.3.2-36 Rod Cluster Control Assembly Pattern

*The Unit 1 H-8 Control Rod Assembly has been removed from the core for Cycles 24 and 25.

*The Unit 2 H-8 Control Rod Assembly has been removed from the core for Cycles 24 and 25.

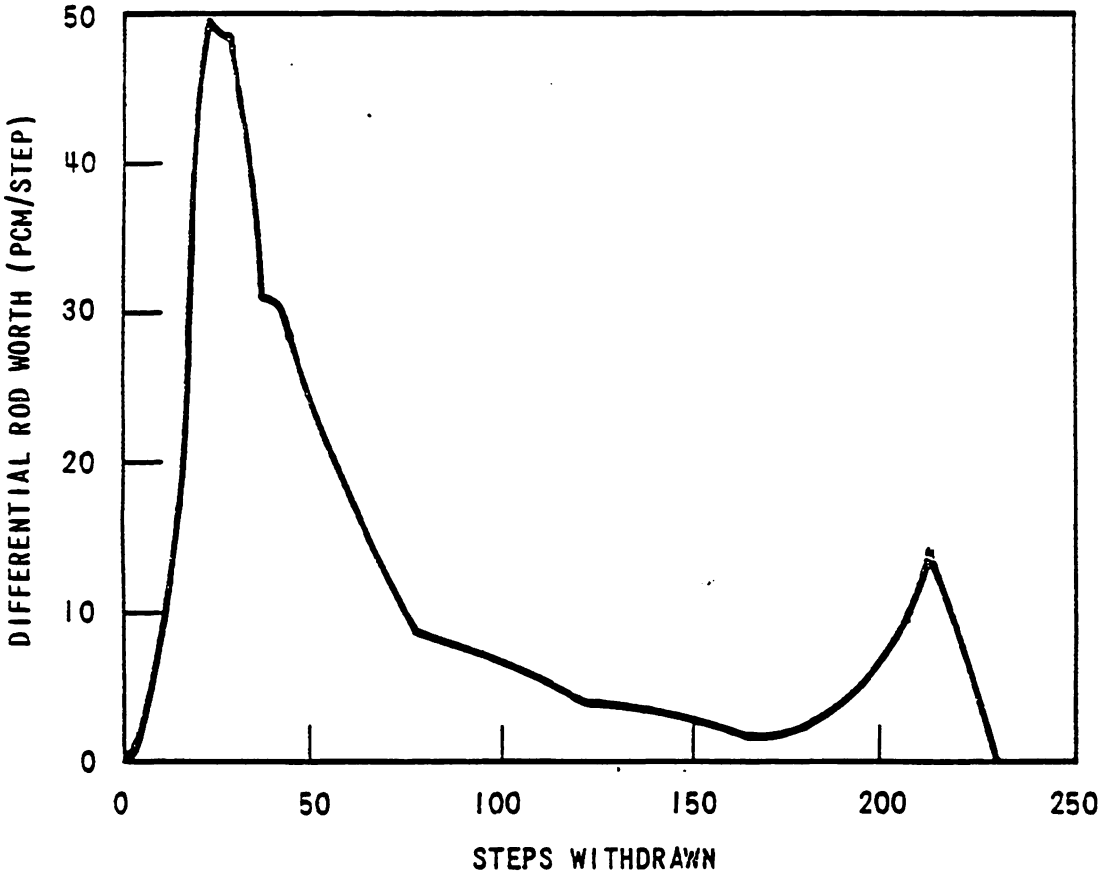

Figure 4.3.2-37 Typical Accidental Simultaneous Withdrawal of Two Control Banks EOL, HZP Banks D and B Moving in the Same Plane

FIGURE 4.3.2-38

RCCA POSITION VS. TIME ON REACTOR TRIP

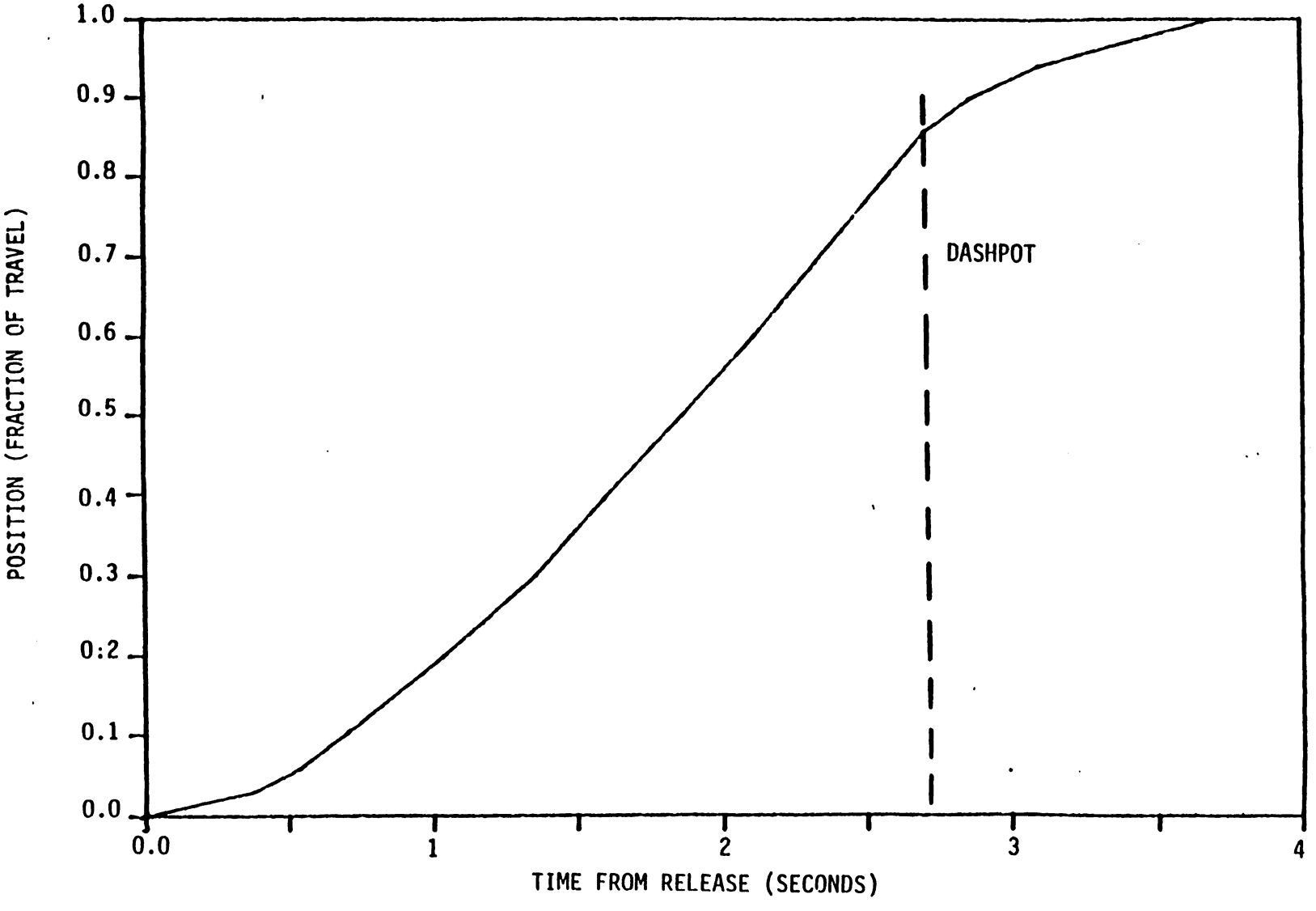

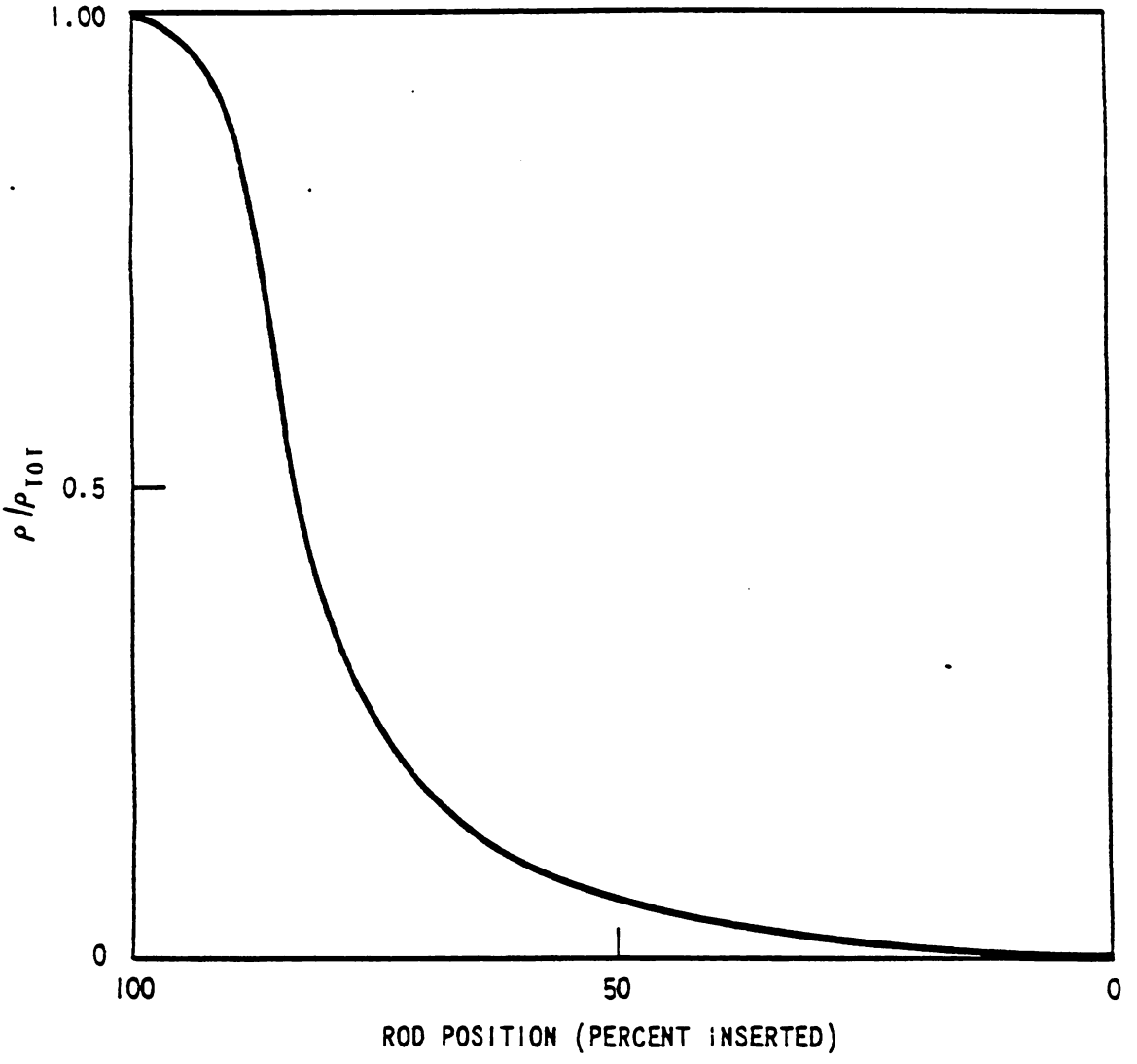

Figure 4.3.2-39 Typical Normalized Rod Worth versus Percent Insertion All Rods But One

Deleted by Amendment 8

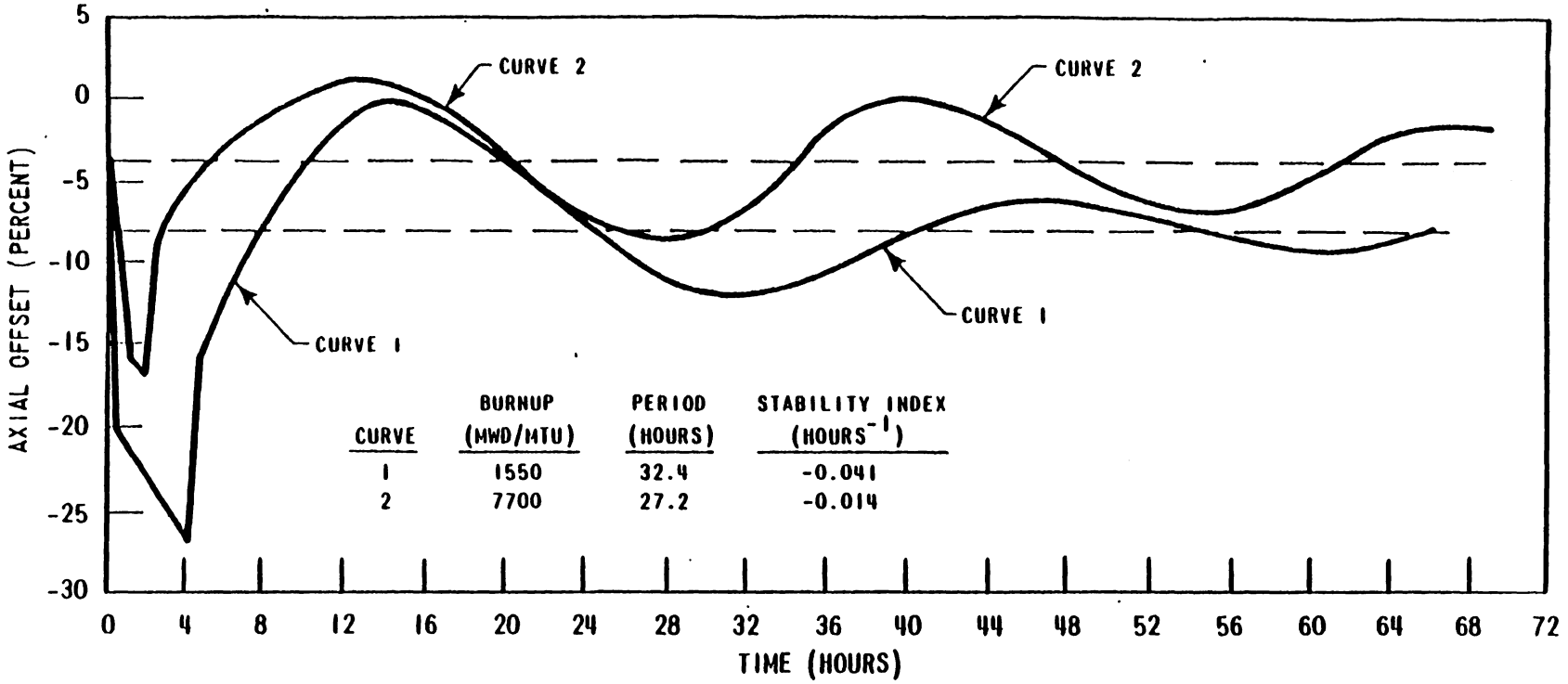

Figure 4.3.2-41 Axial Offset versus Time PWR Core with a 12-Ft Height and 121 Assemblies

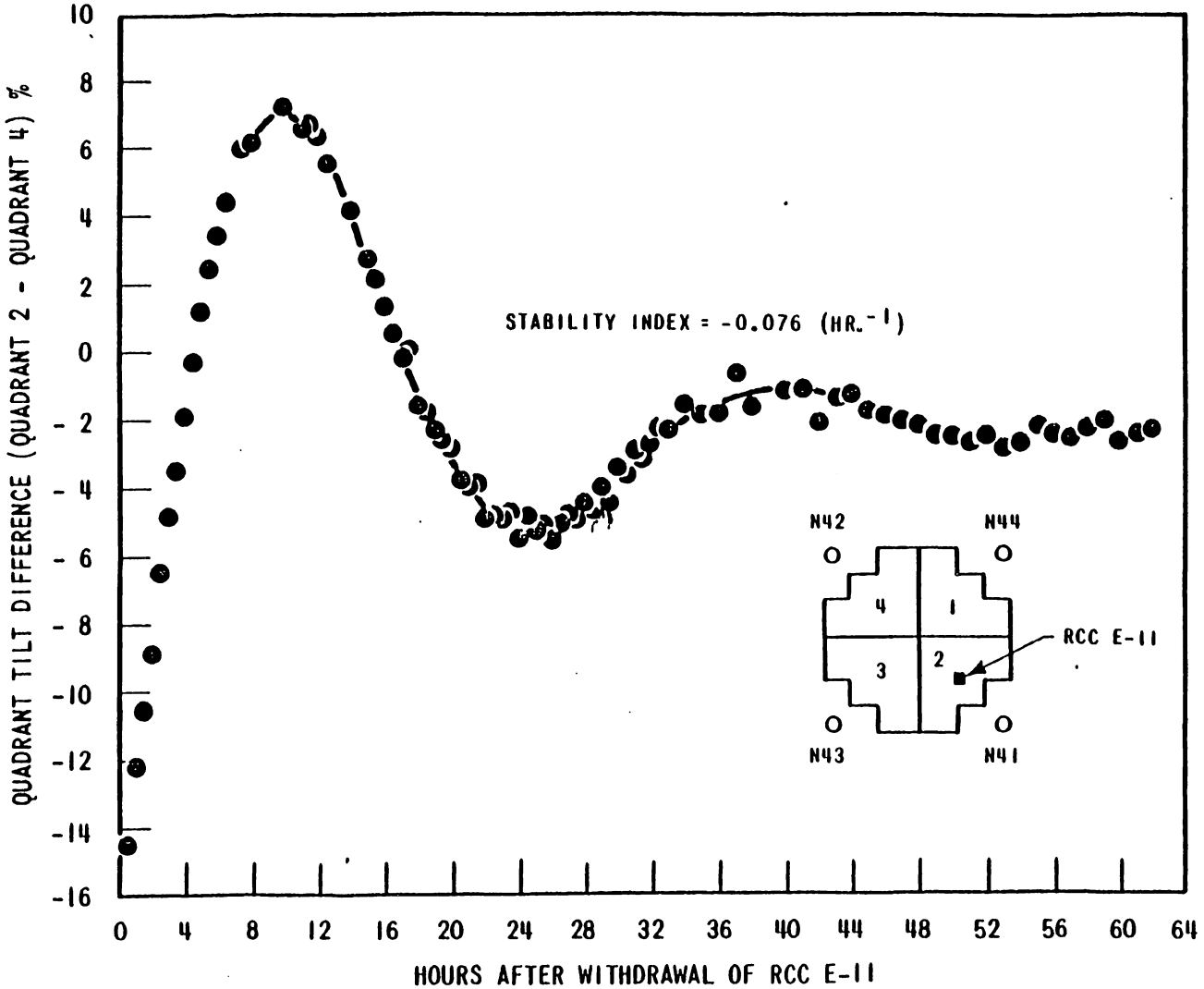

Figure 4.3.2-42 XY Xenon Test Thermocouple Response Quadrant Tilt Difference versus Time

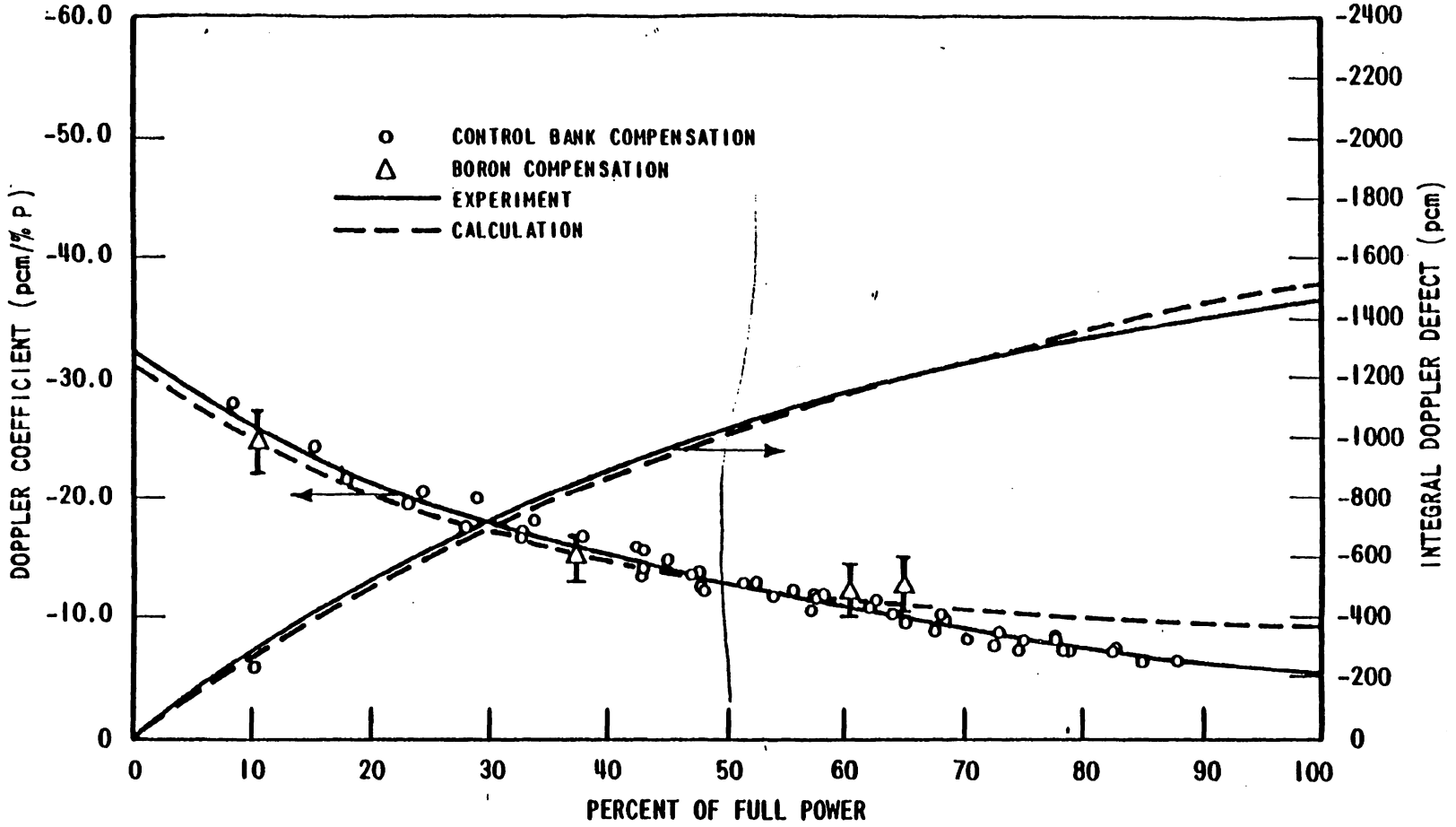

Figure 4.3.2-43 Calculated and Measured Doppler Defect and Coefficients at BOL Two-Loop Plant, 121 Assemblies, 12-Foot Core

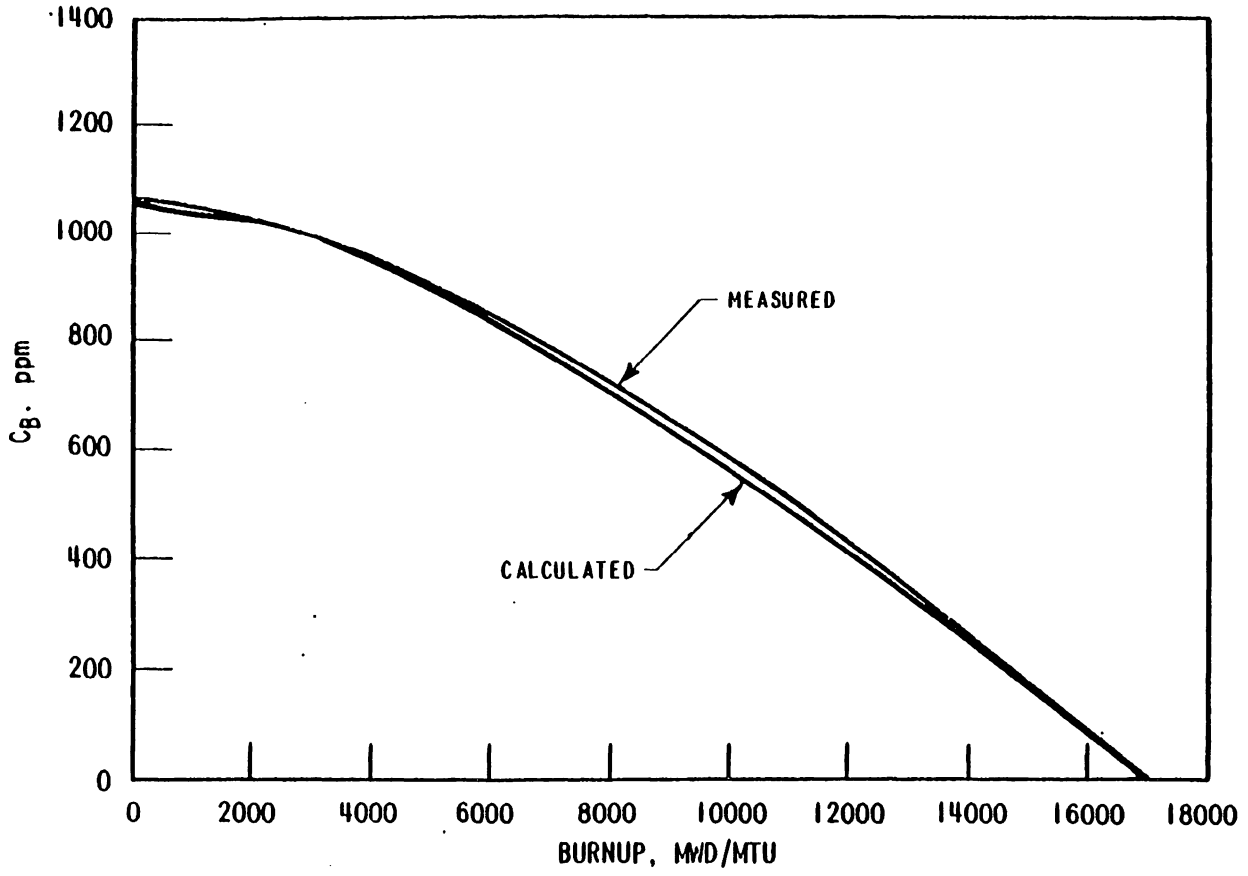

Figure 4.3.2-44 Comparison of Calculated and Measured Boron Concentration for 2-Loop Plant, 121 Assemblies, 12 Foot Core

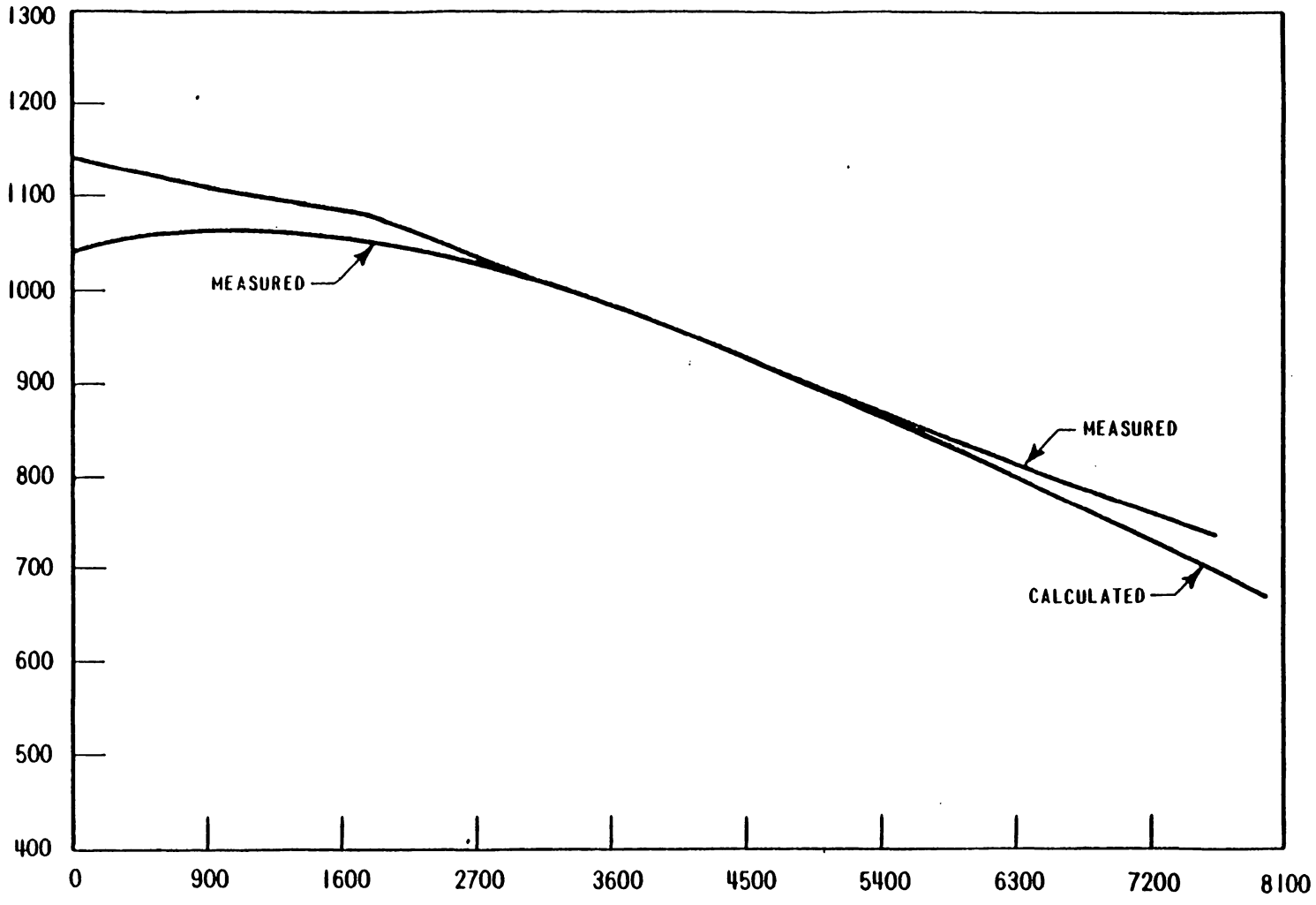

Figure 4.3.2-45 Comparison of Calculated and Measured C_B, 2-Loop Plant, 121 Assemblies, 12 Foot Core

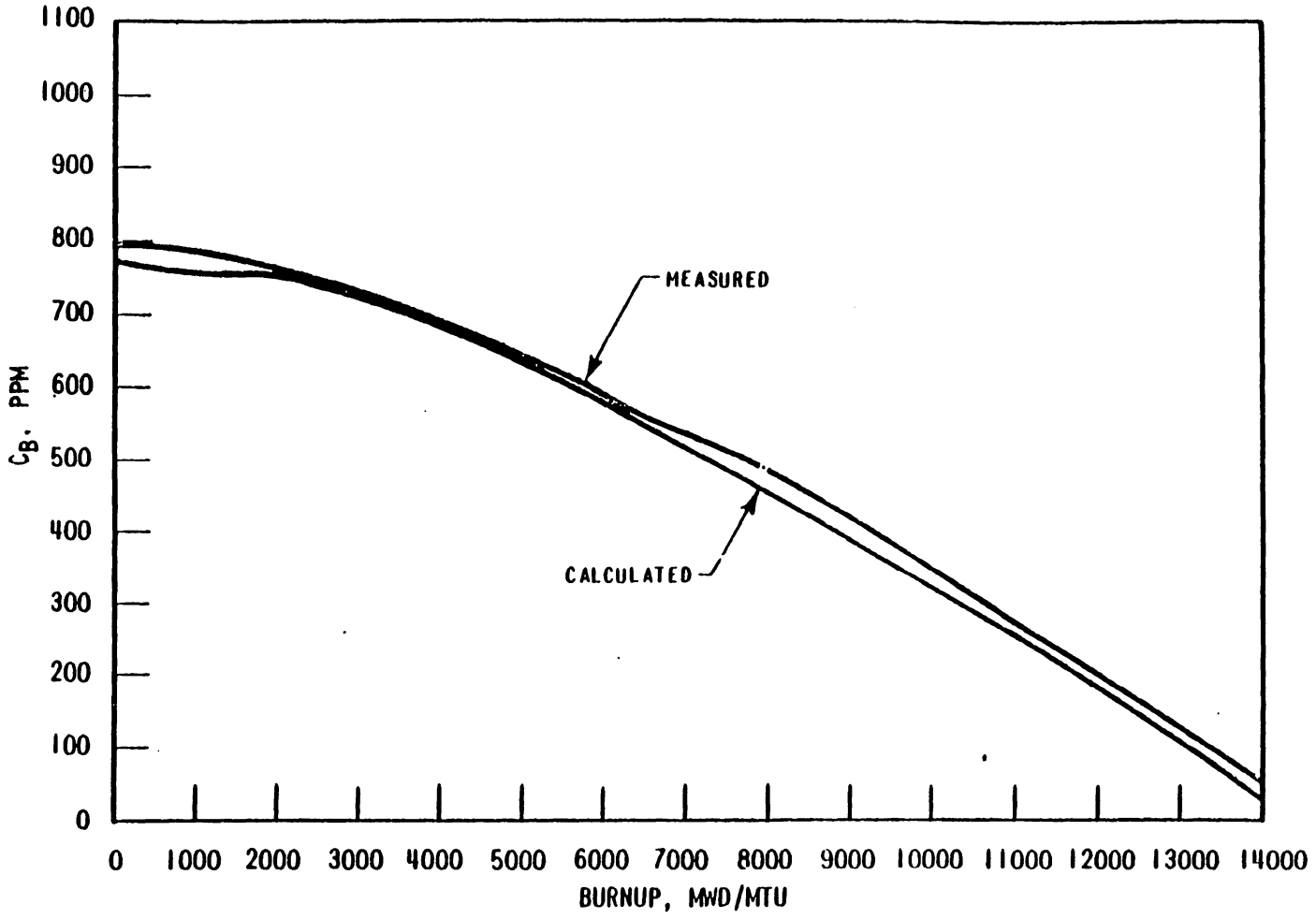

Figure 4.3.2-46 Comparison of Calculated and Measured C_B, 3-Loop Plant, 157 Assemblies, 12 Foot Core

4.4 THERMAL AND HYDRAULIC DESIGN

4.4.1 Design Bases

The overall objective of the thermal and hydraulic design of the reactor core is to provide adequate heat transfer which is compatible with the heat generation distribution in the core such that heat removal by the Reactor Coolant System or the Emergency Core Cooling System (when applicable) assures that the following performance and safety criteria requirements are met:

1. Fuel damage (fuel damage as used here is defined as penetration of the fission product barrier: the fuel rod clad) is not expected during normal operation and operational transients (Condition I) or any transient conditions arising from faults of moderate frequency (Condition II). It is not possible, however, to preclude a very small number of rod failures. These will be within the capability of the plant cleanup system and are consistent with the plant design bases.

2. The reactor can be brought to a safe state following a Condition III event with only a small fraction of fuel rods damaged[1] although sufficient fuel damage might occur to preclude resumption of operation without considerable outage time.

3. The reactor can be brought to a safe state and the core can be kept subcritical with acceptable heat transfer geometry following transients arising from Condition IV events.

In order to satisfy the above criteria the following design bases have been established for the thermal and hydraulic design of the reactor core.

4.4.1.1 Departure from Nucleate Boiling Design Basis

Basis

There will be at least a 95% probability that departure from nucleate boiling (DNB) will not occur on the limiting fuel rods during normal operation and operational transients and any transient conditions arising from faults of moderate frequency (Condition I and II events) at 95% confidence level. Historically, this criterion has been conservatively met by adhering to the following thermal design basis: there must be at least a 95% probability that the minimum departure from nucleate boiling ratio (DNBR) of the limiting power rod during Condition I and II events is greater than or equal to the safety analysis DNBR limit. The design limit DNBR is set at 1.22 for the typical cell and 1.21 for the thimble cell. Plant specific margin to accommodate rod bow and other DNB penalties and allowance for flexibility in the design, operation, and analysis of the plant is provided by performing the safety analyses to a safety analysis DNBR limit value of 1.38.

Discussion

Historically, this DNBR limit has been 1.30 for Westinghouse applications. In this application, the WRB-1 correlation (Reference 86) is employed. With the significant improvement in the accuracy of the critical heat flux prediction by using the WRB-1 correlation instead of previous DNB correlations, a DNBR limit of 1.17 is applicable for the 17x17 Standard fuel assembly (Reference 86) and for the VANTAGE 5H fuel assembly (Reference 87).

The design method used to meet the DNB design basis is the MINI-Revised Thermal Design Procedure (Reference 94) which is a conservative application of the Revised Thermal Design Procedure (Reference 95). In the MINI-RTDP method, uncertainties in the nuclear peaking factors and fuel fabrication parameters are combined statistically with the THINC-IV and Transient Code UTILIZE DNB correlation uncertainties to define the DNBR design limit such that there is at least a 95 percent probability (with 95 percent confidence) that DNB will not occur when the calculated minimum DNBR is equal to or greater than the design limit. The uncertainties included in the MINI-RTDP method are for the nuclear enthalpy hot-channel factor F(N, H); the enthalpy rise engineering hot-channel factor, F(E, H); and the THINC-IV and transient codes. Since the uncertainties in these parameters are considered in determining the design DNBR value, the plant safety analyses are performed using input values without uncertainties for these parameters. For this application, the DNBR design limit value is 1.22 for the typical cell and 1.21 for the thimble.

In addition to the considerations above, a specific plant allowance has been considered in the present analysis. In particular, a DNBR limit value of 1.38 has been used in the safety analyses for the plant. The difference between the DNBR value used in the safety analyses and the design DNBR value (1.38 vs. 1.21) provides plant specific DNB margin to offset the rod bow penalty and other DNB penalties that may occur. This DNB margin may also be used for flexibility in the design, operation or analysis of the plant.

For conditions outside the range of parameters for the WRB-1 correlation (refer to Section 4.4.2.3.1), the W-3 correlation is used with a DNBR correlation limit of 1.30 for pressure equal to or greater than 1000 psia. For low pressure applications (500-1000 psia), the W-3 DNBR correlation limit is 1.45 (Reference 96).

By preventing departure from nucleate boiling, adequate heat transfer is assured between the fuel clad and the reactor coolant, thereby preventing clad damage as a result of inadequate cooling. Maximum fuel rod surface temperature is not a design basis as it will be within a few degrees of coolant temperature during operation in the nucleate boiling region. Limits provided by the nuclear control and protection systems are such that this design basis will be met for transients associated with Condition II events including overpower transients. There is an additional large DNBR margin at rated power operation and during normal operating transients.

4.4.1.2 Fuel Temperature Design Basis

Basis

During modes of operation associated with Condition I and Condition II events, the maximum fuel temperature shall be less than the melting temperature of UO_2. The UO_2 melting temperature for at least 95% of the peak kW/ft fuel rods will not be exceeded at the 95% confidence level. The melting temperature of UO_2 is taken as 5080°F (Reference 1) unirradiated and reducing 58°F per 10,000 MWD/MTU. By precluding UO_2 melting, the fuel geometry is preserved and possible adverse effects of molten UO_2 on the cladding are eliminated. To preclude center melting and as a basis for overpower protection system setpoints, a calculated centerline fuel temperature of 4700°F has been selected as the overpower limit. This provides sufficient margin for uncertainties in the thermal evaluations as described in Subparagraph 4.4.2.10.1.

Discussion

Fuel rod thermal evaluations are performed at rated power, maximum overpower and during transients at various burnups. These analyses assure that this design basis as well as the fuel integrity design bases given in Section 4.2 are met. They also provide input for the evaluation of Condition III and IV faults given in Chapter 15.

4.4.1.3 Core Flow Design Basis

Basis

A minimum of 91.0%* of the Thermal Flow Rate will pass through the fuel rod region of the core and be effective for fuel rod cooling. Coolant flow through the thimble tubes as well as the leakage from the core barrel-baffle region into the core are not considered effective for heat removal.

Discussion

Core cooling evaluations are based on the Thermal Flow Rate (minimum flow) entering the reactor vessel. A maximum of 9.0%** of this value is allotted as bypass flow. This includes RCC guide thimble cooling flow, head cooling flow, baffle leakage, and leakage to the vessel outlet nozzle.

4.4.1.4 Hydrodynamic Stability Design Bases

Basis

Modes of operation associated with Condition I and II events shall not lead to hydrodynamic instability. Hydrodynamic instability is defined in Section 4.4.3.5.

4.4.1.5 Other Considerations

The above design bases together with the fuel clad and fuel assembly design bases given in paragraph 4.2.1.1 are sufficiently comprehensive so additional limits are not required.

Fuel rod diametral gap characteristics, moderator-coolant flow velocity and distribution, and moderator void are not inherently limiting. Each of these parameters is incorporated into the thermal and hydraulic models used to ensure the above mentioned design criteria are met. For instance, the fuel rod diametral gap characteristics change with time (see Subparagraph 4.2.1.3.1) and the fuel rod integrity is evaluated on that basis. The effect of the moderator flow velocity and distribution (see Paragraph 4.4.2.3) and moderator void distribution (see Paragraph 4.4.2.5) are included in the core thermal (THINC) evaluation and thus affect the design bases.

Meeting the fuel clad integrity criteria covers possible effects of clad temperature limitations. As noted in Subparagraph 4.2.1.3.1, the fuel rod conditions change with time. A single clad temperature limit for Condition I or Condition II events is not appropriate since of necessity it would be overly conservative. A clad temperature limit is applied to the loss of coolant accident (Subsection 15.4.1), control rod ejection accident (Reference 2) and locked rotor accident (Reference 3).

---

* The minimum thermal flow rate passing through the core for Units 1 and 2 has decreased to 90.9%. This is applicable to Units 1 and 2, with or without the H-8 control rod assembly.

** The maximum bypass flow has increased to 9.1%. This is applicable to Units 1 and 2, with or without the H-8 control rod assembly.

4.4.2 Description

4.4.2.1 Summary Comparison

The design of Sequoyah Units 1 and 2 reactors with the 17 x 17 fuel rod array per assembly has the following identical thermal and hydraulic parameters as the Trojan fuel rod array reactor design:

1. Core power
2. System pressure
3. Open lattice fuel rod array

Values of each parameter are presented in Table 4.4.2-1 for all coolant loops in service and in Table 4.4.2-2 for all but one coolant loop in service. It is also noted that in this power capability evaluation, there has not been any change in the design criteria. The reactor is designed to meet the DNB design basis as well as no fuel centerline melting during normal operation, operational transients and faults of moderate frequency.

4.4.2.2 Fuel and Cladding Temperatures (Including Densification)

Consistent with the thermal-hydraulic design bases described in Subsection 4.4.1, the following discussion pertains mainly to fuel pellet temperature evaluation. A discussion of fuel clad integrity is presented in Subparagraph 4.2.1.3.1.

The thermal-hydraulic design assures that the maximum fuel temperature is below the melting point of UO_2 (melting point of 5080°F (Reference 1) unirradiated and reducing by 58°F per 10,000 MWD/MTU). To preclude center melting and as a basis for overpower protection system setpoints, a calculated centerline fuel temperature of 4700°F has been selected as the overpower limit. This provides sufficient margin for uncertainties in the thermal evaluations as described in Subparagraph 4.4.2.10.1. The temperature distribution within the fuel pellet is predominantly a function of the local power density and the UO_2 thermal conductivity.

However, the computation of radial fuel temperature distributions combines crud, oxide, clad gap and pellet conductances. The factors which influence these conductances, such as gap size (or contact pressure), internal gas pressure, gas composition, pellet density, and radial power distribution within the pellet, etc., have been combined into a semi-empirical thermal model (see Subparagraph 4.2.1.3.1) which includes a model for time dependent fuel densification as given in References 77, 85, and 91. This thermal model enables the determination of these factors and their net effects on temperature profiles. The temperature predictions have been compared to in-pile fuel temperature measurements (References 7 through 13 and 85) and melt radius data (References 14 and 15) with good results.

Effect of Fuel Densification on Fuel Rod Temperatures

Fuel densification results in fuel pellet shrinkage. This affects the fuel temperatures in the following ways:

1. Pellet radial shrinkage increases the pellet diametral gap which results in increased thermal resistance of the gap, and thus, higher fuel temperatures (see Subparagraph 4.2.1.3.1).

2. Pellet axial shrinkage may produce pellet to pellet gaps resulting in local power spikes, described in Subparagraph 4.3.2.2.1 and thus, higher total heat flux hot channel factor, F_Q, and local fuel temperature.

3. Pellet axial shrinkage will result in a fuel stack height reduction and an increase in the linear power generation rate (kW/ft) for a constant core power level. Using the methods described in Section 5.3 of Reference 6, the increase in linear power for the fuel rod specifications listed in Table 4.3.2-1 is 0.2%.

Fuel rod thermal evaluations (fuel centerline average and surface temperatures) are performed at several times in the fuel rod lifetime (with consideration of time dependent densification) to determine the maximum fuel temperatures.

4.4.2.2.1 UO_2 Thermal Conductivity

The thermal conductivity of uranium dioxide was evaluated from data reported by Howard, et. al., (Reference 16); Lucks, et. al., (Reference 17); Danial, et. al., (Reference 18); Feith (Reference 19); Vogt, et. al., (Reference 20); Nishijima, et. al., (Reference 21); Wheeler, et. al., (Reference 22); Godfrey, et. al., (Reference 23); Stora, et. al., (Reference 24); Bush (Reference 25); Asamoto, et. al., (Reference 26); Kruger (Reference 27); and Gyllander (Reference 28).

At the higher temperatures, thermal conductivity is best obtained by utilizing the integral conductivity to melt which can be determined with more certainty.

From an examination of the data, it has been concluded that the best estimate for the value of $\int_0^{2800c} K dt$ is 93 watts / cm.

This conclusion is based on the integral values reported by Gyllander (Reference 28); Lyons, et. al., (Reference 29); Coplin, et. al., (References 30); Duncan (Reference 14); Bain (Reference 31); and Stora (Reference 32).

The design curve for the thermal conductivity is shown in Figure 4.4.2-3.
The section of the curve at temperatures between 0°C and 1300°C is in excellent agreement with the recommendation of the IAEA panel (Reference 33). The section of the curve above 1300°C is derived for an integral value of 93 watts/cm (References 14, 28 and 32).

Thermal conductivity for UO_2 at 95 percent theoretical density can be represented best by the following equation:

$$K = \frac{1}{11.8 + 0.0238T} + 8.775 \times 10^{-13} T^3$$

where

$$K = watts / cm^{-\circ} C$$
$$T = {}^{\circ}C$$

4.4.2.2.2 Radial Power Distribution in UO_2 Fuel Rods

An accurate description of the radial power distribution as a function of burnup is needed for determining the power level for incipient fuel melting and other important performance parameters such as pellet thermal expansion, fuel swelling and fission gas release rates.

This information on radial power distributions in UO_2 fuel rods is determined with the neutron transport theory code, LASER. The LASER code has been validated by comparing the code predictions on radial burnup and isotopic distributions with measured radial microdrill data (References 34 and 35). A "radial power depression factor," f, is determined using radial power distributions predicted by LASER. The factor f enters into the determination of the pellet centerline temperature, T_c, relative to the pellet surface temperature, T_s, through the expression:

$$\int_{T_s}^{T_c} k(T)\, dT = \frac{q'f}{4\pi} \qquad (4.4\text{-}2)$$

where

k(T) = the thermal conductivity for UO_2 with a uniform density distribution

q' = the linear power generation rate.

4.4.2.2.3 Gap Conductance

The temperature drop across the pellet-clad gap is a function of the gap size and the thermal conductivity of the gas in the gap. The gap conductance model is selected such that when combined with the UO_2 thermal conductivity model, the calculated fuel centerline temperatures reflect the in-pile temperature measurements. A more detailed discussion of the gap conductance model is presented in References 77, 85 and 91.

4.4.2.2.4 Surface Heat Transfer Coefficients

The fuel rod surface heat transfer coefficients during subcooled forced convection and nucleate boiling are presented in Subparagraph 4.4.2.8.1.

4.4.2.2.5 Fuel Clad Temperatures

The outer surface of the fuel rod at the hot spot operates at a temperature of approximately 660°F for steady state operation at rated power throughout core life due to the onset of nucleate boiling. Initially (beginning-of-life), this temperature is that of the clad metal outer surface.

During operation over the life of the core, the buildup of oxides and crud on the fuel rod surface causes the clad surface temperature to increase. Allowance is made in the fuel center melt evaluation for this temperature rise. Since the thermal-hydraulic design basis limits DNB, adequate heat transfer is provided between the fuel clad and the reactor coolant so that the core thermal output is not limited by considerations of the clad temperature.

4.4.2.2.6 Treatment of Peaking Factors

The total heat flux hot channel factor, F_Q, is defined by the ratio of the maximum to core average heat flux as discussed in Subparagraph 4.3.2.2.1, the design value F_Q for normal operation is 2.40, including fuel densification effects. Subparagraph 15.4.1.1.7 discusses the F_Q value used in LOCA analyses.

This results in a peak local power of 13.0 kW/ft at full power conditions. The peak linear power for determination of protection setpoints is 21.1 kW/ft. The centerline temperature at this kW/ft must be below the UO_2 melt temperature over the lifetime of the rod, including allowances for uncertainties. The fuel temperature design basis is discussed in Subsection 4.4.1.2 and results in a maximum allowable calculated centerline temperature of 4700°F. The peak linear power for prevention of centerline melt is > 21.1 kW/ft. The centerline temperature at the peak linear power resulting from overpower transients/overpower errors (assuming a maximum overpower of 116.5%) is below that required to produce melting.

4.4.2.3 Critical Heat Flux Ratio or Departure from Nucleate Boiling Ratio and Mixing Technology

The minimum DNBRs for the rated power, and anticipated transient conditions are given in Table 4.4.2-1. The minimum DNBR in the limiting flow channel will be downstream of the peak heat flux location (hot spot) due to the increased downstream enthalpy rise.

DNBRs are calculated by using the correlation and definitions described in the following Subparagraphs 4.4.2.3.1 and 4.4.2.3.2. The THINC-IV computer code (discussed in Subparagraph 4.4.3.4.1) is used to determine the flow distribution in the core and the local conditions in the hot channel for use in the DNB correlation. The use of hot channel factors is discussed in Subparagraph 4.4.3.2.1 (nuclear hot channel factors) and in Subparagraph 4.4.2.3.4 (engineering hot channel factors).

4.4.2.3.1 Departure from Nucleate Boiling Technology

The WRB-1 DNB correlation is applicable to VANTAGE 5H fuel since, from a DNB perspective, the VANTAGE 5H assembly is virtually identical to the 17x17 Inconel R-Grid design. As documented in Reference 87, the use of the WRB-1 DNB correlation with a 95/95 limit DNBR of 1.17 is applicable to the VANTAGE 5H fuel assembly.

For conditions outside the range of applicability of the WRB-1, the W-3 correlation is used.

The W-3 correlation, and several modifications of it, have been used in Westinghouse CHF calculations. The W-3 was originally developed from single tube data, (Reference 39) but was subsequently modified to apply to the 0.422 inch O.D. rod "R" grid, [Reference 42] and "L" grid, [Reference 38] as well as the 0.374 inch O.D., [Reference 84, 40] rod bundle data. These modifications to the W-3 correlation have been demonstrated to be adequate for reactor rod bundle design.

For the W-3 correlation, the 95/95 limit DNBR is 1.30 at system pressures greater than or equal to 1000 psi. For low pressure application (500-1000 psi), the 95/95 limit DNBR is 1.45 (Reference 92).

4.4.2.3.2 Definition of DNB Heat Flux Ratio (DNBR)

The DNB heat flux ratio (DNBR) as applied to typical cells (flow cells with all walls heated) and thimble cells (flow cells with heated and unheated walls) is defined as:

$$DNBR = \frac{q''_{DNB,N}}{q''_{LOC}} \qquad (4.4-3)$$

where

$$q''_{DNB,N} = \frac{q''_{DNB,EU}}{F} \qquad (4.4-4)$$

and q"DNB,EU is the uniform critical heat flux as predicted by the WRB-1 DNB correlation (Reference 86).

F is the flux shape factor to account for nonuniform axial heat flux distributions (Reference 44) with the "C" term modified as in Reference 39, and q''_{loc} is the actual local heat flux.

4.4.2.3.3 Mixing Technology

The rate of heat exchange by mixing between flow channels is proportional to the difference in the local mean fluid enthalpy of the respective channels, the local fluid density and flow velocity. The proportionality is expressed by the dimensionless thermal diffusion coefficient, TDC, which is defined as:

$$TDC = \frac{w'}{\rho V a} \qquad (4.4\text{-}14)$$

where:

w' = flow exchange rate per unit length, lbm/ft-sec
p = fluid density, lbm/ft^3
V = fluid velocity, ft/sec
a = lateral flow area between channels per unit length, ft^2/ft

The application of the TDC in the THINC analysis for determining the overall mixing effect or heat exchange rate is presented in Reference 41.

Various mixing tests have been performed at Columbia University (Reference 46). This series of tests, using the "R" mixing vane grid design on 13, 26 and 32 inch grid spacing, was conducted in pressurized water loops at Reynolds numbers similar to that of a PWR core under the following single and two phase (subcooled boiling) flow conditions:

Pressure	1500 to 2400 psia
Inlet enthalpy	303 to 638 Btu/lb
Mass velocity	.954 to 3.58 x 10^6 lbm/hr ft^2
Reynolds number	1.34 to 7.45 x 10^5
Bulk outlet quality	-52.1 to -13.5%

TDC is determined by comparing the THINC code predictions with the measured subchannel exit temperature. Data for 26 inch axial grid spacing are presented in Figure 4.4.2-6 where the thermal diffusion coefficient is plotted versus the Reynolds number. TDC is found to be independent of Reynolds number, mass velocity, pressure and quality over the ranges tested. The two phase data (local, subcooled boiling) fell within the scatter of the single phase data. The effect of two-phase flow on the value of TDC has been demonstrated by Cadek (Reference 46), Rowe and Angle, (References 47 and 48) and Gonzalez - Santalo and Griffith (Reference 49). In the subcooled boiling region the values of TDC were indistinguishable from the single phase values. In the quality region, Rowe and Angle show that in the case with rod spacing similar to that in PWR reactor core geometry, the value of TDC increased with quality to a point and then decreased, but never below the single phase value. Gonzalez - Santalo and Griffith showed that the mixing coefficient increased as the void fraction increased.

The data from these tests on the "R" grid showed that a design TDC value of 0.038 (for 26 inch grid spacing) can be used in determining the effect of coolant mixing in the THINC analysis.

A mixing test program similar to the one described above was conducted at Columbia University for the 17 x 17 geometry and mixing vane grids on 26 inch spacing (Reference 50). The mean value of TDC obtained from these tests was 0.059, and all data was well above the current design value of 0.038.

Since the actual reactor grid spacing is approximately 20 inches, additional margin is available for this design, as the value of TDC increases as grid spacing decreases (Reference 46).
Zircaloy mixing vane grids are employed in the VANTAGE 5H fuel assembly. The VANTAGE 5H Zircaloy grid design is virtually identical to the 17x17 Inconel R-grid design in that the rod size, rod pitch, heated length and grid spacing are unchanged. Due to the change in grid material from Inconel to Zircaloy, the grid height and strap thickness have increased. However, the VANTAGE 5H Zircaloy grid was designed to preserve the important characteristics of the existing 17x17 type "R" mixing vane grid. Thus, the current conservative design value of TDC is applicable to the VANTAGE 5H fuel assembly design.

4.4.2.3.4 Hot Channel Factors

The total hot-channel factors for heat flux and enthalpy rise are defined as the maximum-to-core average ratios of these quantities. The heat flux hot-channel factor considers the local maximum linear heat generation rate at a point (the 'hot spot'), and the enthalpy rise hot-channel factor involves the maximum integrated value along a channel (the 'hot-channel').

Each of the total hot-channel factors considers a nuclear hot-channel factor (see Paragraph 4.4.3.2) describing the neutron power distribution and an engineering hot-channel factor, which allows for variations in flow conditions and fabrication tolerances. The engineering hot-channel factors are made up of subfactors which account for the influence of the variations of fuel pellet diameter, density, enrichment and eccentricity; inlet flow distribution; flow redistribution; and flow mixing.

Heat Flux Engineering Hot-Channel Factor, F_O^E

The heat flux engineering hot channel factor is used to evaluate the maximum linear heat generation rate in the core. This subfactor is determined by statistically combining the

tolerances for the fuel pellet diameter, density, enrichment, eccentricity and the fuel rod diameter, and has a value of 1.033. Measured manufacturing data on recent Westinghouse 17 x 17 fuel were used to verify that this value was not exceeded for 95% of the limiting fuel rods at a 95% confidence level

Enthalpy Rise Engineering Hot-Channel Factor, $F_{\Delta H}^{E}$

The effect of variations in flow conditions and fabrication tolerances on the hot-channel enthalpy rise is directly considered in the THINC core thermal subchannel analysis (See Subparagraph 4.4.3.4.1) under any reactor operating condition. The items considered contributing to the enthalpy rise engineering hot-channel factor are discussed below:

1. Pellet diameter, density and enrichment:

   Design values employed in the THINC analysis related to the above fabrication variations are based on applicable limiting tolerances such that these design values are met for 95 percent of the limiting channels at a 95 percent confidence level. Measured manufacturing data on Westinghouse 17 x 17 fuel show the tolerances used in this evaluation are conservative. The effect of variations in pellet diameter and enrichment is employed in the THINC analysis as a direct multiplier on the hot channel enthalpy rise.

2. Inlet Flow Maldistribution:

   The consideration of inlet flow maldistribution in core thermal performances is discussed in Subparagraph 4.4.3.1.2. A design basis of 5% reduction in coolant flow to the hot assembly is used in the THINC-IV analysis.

3. Flow Redistribution

   The flow redistribution accounts for the reduction in flow in the hot channel resulting from the high flow resistance in the channel due to the local or bulk boiling. The effect of the non-uniform power distribution is inherently considered in the THINC analysis for every operating condition which is evaluated.

4. Flow Mixing:

   The subchannel mixing model incorporated in the THINC Code and used in reactor design is based on experimental data (Reference 51) discussed in Subparagraph 4.4.3.4.1. The mixing vanes incorporated in the spacer grid design induce additional flow mixing between the various flow channels in a fuel assembly as well as between adjacent assemblies. This mixing reduces the enthalpy rise in the hot channel resulting from local power peaking or unfavorable mechanical tolerances.

4.4.2.3.5 Effects of Rod Bow on DNBR

The phenomenon of fuel rod bowing, as described in Reference 88, must be accounted for in the DNBR safety analysis of Condition I and Condition II events. Applicable credits for margin

resulting from retained conservatism in the evaluation of the DNBR and/or margin obtained from the measured plant operating parameters (such as $F^N_{\Delta H}$ or core flow) -- which are less limiting than those required by the plant safety analysis -- can be used to offset the effect of rod bow.

Based on the current methodology described in References 88, 89, and 90, a rod bow DNBR penalty of < 1.5% is applicable to 17x17 Standard fuel assemblies at a burnup of 24,000 MWD/MTU. Based on the similarities between 17x17 Standard and VANTAGE 5H fuel assemblies (i.e., fuel rod diameter, fuel rod pitch and grid spacing), this penalty is also applicable to the VANTAGE 5H fuel assembly.

The maximum rod bow penalty accounted for in the design safety analysis is based on an assembly average burnup of 24,000 MWD/MTU. At burnups greater than 24,000 MWD/MTU, credit is taken for the effect of $F^N_{\Delta H}$ burndown, due to the decrease in fissionable isotopes and the buildup of fission product inventory, and no additional rod bow penalty is required.

For the safety analysis of the Sequoyah Units, sufficient DNBR margin was retained between the safety analysis DNBR limit and the design limit DNBR (see Section 4.4.1.1) to more than offset the rod bow DNBR penalty.

4.4.2.4 Flux Tilt Considerations

Significant quadrant power tilts are not anticipated during normal operation since this phenomenon is caused by some asymmetric perturbation. A dropped or misaligned RCCA could cause changes in hot channel factors; however, these events are analyzed separately in Chapter 15. This discussion will be confined to flux tilts caused by x-y xenon transients, inlet temperature mismatches, enrichment variations within tolerances and so forth.

The design value of the enthalpy rise hot channel factor $F^N_{\Delta H}$, which includes an 8% uncertainty (as discussed in Subparagraph 4.3.2.2.7), is assumed to be sufficiently conservative that flux tilts up to and including the alarm point (see SQN Technical Specifications) will not result in values of $F^N_{\Delta H}$, greater than that assumed in this submittal. The design value of F_Q^E does not include a specific allowance for quadrant flux tilts.

4.4.2.5 Void Fraction Distribution

The calculated core average and the hot subchannel maximum and average void fractions are presented in Table 4.4.2-3 for operation at full power with design hot channel factors. The void fraction distribution in the core at various radial and axial locations is presented in Reference 52. The void models used in the THINC-IV computer code are described in Subparagraph 4.4.2.8.3.

4.4.2.6 Core Coolant Flow Distribution

Assembly average coolant mass velocity and enthalpy at various radial and axial core locations are given below. Coolant enthalpy rise and flow distributions are shown for the 4 foot elevation (1/3 of core height) in Figure 4.4.2-7 and 8 foot elevation (2/3 of core height) in Figure 4.4.2-8 and at the core exit in Figure 4.4.2-9. These distributions are for the full power conditions as

given in Table 4.4.2-1 and for the radial power density distribution shown in Figure 4.3.2-7. The THINC code analysis for this case utilized a uniform core inlet enthalpy and inlet flow distribution.

4.4.2.7 Core Pressure Drops and Hydraulic Loads

4.4.2.7.1 Core Pressure Drops

The analytical model and experimental data used to calculate the pressure drops shown in Table 4.4.2-1 are described in Paragraph 4.4.2.8. The core pressure drop includes the eight grid fuel assembly, core support plate, and holddown plate pressure drops. The full power operation pressure drop values shown in Table 4.4.2-1 are the unrecoverable pressure drops across the vessel, including the inlet and outlet nozzles, and across the core. These pressure drops are based on the Best Estimate Flow (most likely value for actual plant operating conditions) as described in Subsection 5.1. Subsection 5.1 also defines and describes the Thermal Design Flow (minimum flow) which is the basis for reactor core thermal performance and the Mechanical Design Flow (maximum flow) which is used in the mechanical design of the reactor vessel internals and fuel assemblies. Since the Best Estimate Flow is that flow which is most likely to exist in an operating plant, the calculated core pressure drops in Table 4.4.2-1 are based on this best estimate flow rather than the Thermal Design Flow.

Uncertainties associated with the core pressure drop values are discussed in Subparagraph 4.4.2.10.2.

4.4.2.7.2 Hydraulic Loads

The fuel assembly hold down springs, Figure 4.2.1-2, are designed to keep the fuel assemblies resting on the lower core plate under transients associated with Condition I and II events. Maximum flow conditions are limiting because hydraulic loads are a maximum. The most adverse flow conditions occur during a LOCA. These conditions are presented in Subsection 15.4.1.

Hydraulic loads at normal operating conditions are calculated considering the Mechanical Design Flow which is described in Section 5.1 and accounting for the minimum core bypass flow based on manufacturing tolerances. Core hydraulic loads at cold plant startup conditions are adjusted to account for the coolant density difference. Conservative core hydraulic loads for a pump overspeed transient, which create flow rates 20% greater than the Mechanical Design Flow, are evaluated to be greater than twice the fuel assembly weight.

Core hydraulic loads were measured during the prototype assembly tests described in Section 1.5. Reference 5 contains a detailed discussion of the results for STD fuel. Full scale hydraulic test results for VSH fuel are presented in reference 93.

The hydraulic loads during normal operation can be obtained from Reference 5 by adjusting the loads for the Sequoyah pressure drop and flow rate. The effect of startup and shutdown transients are shown to be inconsequential in Reference 5.

4.4.2.8 Correlation and Physical Data

4.4.2.8.1 Surface Heat Transfer Coefficients

Forced convection heat transfer coefficients are obtained from the familiar Dittus-Boelter correlation (Reference 53), with the properties evaluated at bulk fluid conditions:

$$\frac{hD_e}{K} = 0.023 \left(\frac{D_e G}{\mu}\right)^{0.8} \left(\frac{C_p \mu}{K}\right)^{0.4} \qquad (4.4\text{-}15)$$

where:

h	=	heat transfer coefficient, BTU/hr-ft^2-°F
D_e	=	equivalent diameter, ft
K	=	thermal conductivity, BTU/hr-ft-°F
G	=	mass velocity, lb/hr-ft^2
μ	=	dynamic viscosity, lb/ft-hr
C_p	=	heat capacity, BTU/lb-°F

This correlation has been shown to be conservative (Reference 54) for rod bundle geometries with pitch to diameter ratios in the range used by PWRs.

The onset of nucleate boiling occurs when the clad wall temperature reaches the amount of superheat predicted by Thom's (Reference 55) correlation. After this occurrence the outer clad wall temperature is determined by:

$$\Delta T_{sat} = [0.072 \exp(-P/1260)]\,(q'')^{0.5} \qquad (4.4\text{-}16)$$

where:

ΔT_{sat}	=	wall superheat, $T_w - T_{sat}$, °F
q"	=	wall heat flux, BTU/hr-ft^2
P	=	pressure, psia
T_w	=	outer clad wall temperature, °F
T_{sat}	=	saturation temperature of coolant at P, °F

4.4.2.8.2 Total Core and Vessel Pressure Drop

Unrecoverable pressure losses occur as a result of viscous drag (friction) and/or geometry changes (form) in the fluid flow path. The flow field is assumed to be incompressible, turbulent, single-phase water. These assumptions apply to the core and vessel pressure drop calculations for the purpose of establishing the primary loop flow rate. Two-phase considerations are neglected in the vessel pressure drop evaluation because the core average void is negligible (see Paragraph 4.4.2.5 and Table 4.4.2-3). Two phase flow considerations in the core thermal subchannel analyses are considered and the models are discussed in Subparagraph 4.4.3.1.3. Core and vessel pressure losses are calculated by equations of the form:

$$\Delta P_L = \left(K + F\frac{L}{D_e}\right) \frac{pV^2}{2g_c}\,(144) \qquad (4.4\text{-}17)$$

where:

ΔP_L	=	unrecoverable pressure drop, lb_f/in^2
p	=	fluid density, lbm/ft^3
L	=	length, ft.
D_e	=	equivalent diameter, ft
V	=	fluid velocity, ft/sec
g_c	=	$32.174 \frac{lb_m - ft}{lb_f - sec^2}$
K	=	form loss coefficient, dimensionless
F	=	friction loss coefficient, dimensionless

Fluid density is assumed to be constant at the appropriate value for each component in the core and vessel. Because of the complex core and vessel flow geometry, precise analytical values for the form and friction loss coefficients are not available. Therefore, experimental values for these coefficients are obtained from geometrically similar models.

Values are quoted in Table 4.4.2-1 for unrecoverable pressure loss across the reactor vessel, including the inlet and outlet nozzles, and across the core. The results of full scale tests of core components and fuel assemblies were utilized in developing the core pressure loss characteristic. The pressure drop for the vessel was obtained by combining the core loss with correlation of 1/7th scale model hydraulic test data on a number of vessels (References 56 and 57) and form loss relationships (Reference 58). Moody (Reference 59) curves were used to obtain the single phase friction factors.

Tests of the primary coolant loop flow rates will be made (see Paragraph 4.4.4.1) prior to initial criticality to verify that the flow rates used in the design, which were determined in part from the pressure losses calculated by the method described here, are conservative.

4.4.2.8.3 Void Fraction Correlation

There are three separate void regions considered in flow boiling in a PWR as illustrated in Figure 4.4.2-10. They are the wall void region (no bubble detachment), the subcooled boiling region (bubble detachment) and the bulk boiling region.

In the wall void region, the point where local boiling begins is determined when the clad temperature reaches the amount of superheat predicted by Thom's (Reference 55) correlation (discussed in Subparagraph 4.4.2.8.1). The void fraction in this region is calculated using Maurer's (Reference 60) relationship. The bubble detachment point, where the superheated bubbles break away from the wall, is determined by using Griffith's (Reference 61) relationship.

The void fraction in the subcooled boiling region (that is, after the detachment point) is calculated from the Bowring (Reference 62) correlation. This correlation predicts the void fraction from the detachment point to the bulk boiling region.

The void fraction in the bulk boiling region is predicted by using homogeneous flow theory and assuming no slip. The void fraction in this region is therefore a function only of the thermodynamic quality.

4.4.2.9 Thermal Effects of Operational Transients

DNB core safety limits are generated as a function of coolant temperature, pressure, core power and axial power imbalance. Steady-state operation within these safety limits insures that the DNB design basis is met. Figure 15.1.3-1 show the DNBR limit lines and the resulting overtemperature Delta-T trip lines (see SQN Technical Specifications), plotted as Delta-T vs T-average for various pressures. This system provides adequate protection against anticipated operational transients that are slow with respect to fluid transport delays in the primary system. In addition, for fast transients, e.g., uncontrolled rod bank withdrawal at power incident (Subsection 15.2.2) specific protection functions are provided as described in Section 7.2 and the use of these protection functions are described in Chapter 15. (see Table 15.1.3-1). The thermal response of the fuel rod is discussed in Paragraph 4.4.3.7.

4.4.2.10 Uncertainties in Estimates

4.4.2.10.1 Uncertainties in Fuel and Clad Temperature

As discussed in Paragraph 4.4.2.2, the fuel temperature is a function of crud, oxide, clad, gap, and pellet conductances. Uncertainties in the fuel temperature calculation are essentially of two types: fabrication uncertainties such as variations in the pellet and clad dimensions and the pellet density; and model uncertainties such as variations in the pellet conductivity and the gap conductance. These uncertainties have been quantified by comparison of the thermal model to the in-pile thermocouple measurements (References 7 through 13), by out-of-pile measurements of the fuel and clad properties (References 16 through 27), and by measurements of the fuel and clad dimensions during fabrication. The resulting uncertainties are then used in all evaluations involving the fuel temperature. The effect of densification on fuel temperature uncertainties is also included in the calculation of the total uncertainty.

In addition to the temperature uncertainty described above, the measurement uncertainty in determining the local power, and the effect of density and enrichment variations on the local power are considered in establishing the heat flux hot channel factor. These uncertainties are described in Subparagraph 4.3.2.2.1.

Reactor trip setpoints as specified in the SQN Technical Specifications include allowance for instrument and measurement uncertainties such as calorimetric error, instrument drift and channel reproducibility, temperature measurement uncertainties, noise, and heat capacity variations.

Uncertainty in determining the cladding temperature results from uncertainties in the crud and oxide thicknesses. Because of the excellent heat transfer between the surface of the rod and the coolant, the film temperature drop does not appreciably contribute to the uncertainty.

4.4.2.10.2 Uncertainties in Pressure Drops

Core and vessel pressure drops based on the Best Estimate Flow, as described in Section 5.1, are quoted in Table 4.4.2-1. The uncertainties quoted are based on the uncertainties in both the test results and the analytical extension of these values to the reactor application.

A major use of the core and vessel pressure drops is to determine the primary system coolant flow rates as discussed in Section 5.1. In addition, as discussed in Paragraph 4.4.4.1, tests on the primary system prior to initial criticality will be made to verify that a conservative primary system coolant flow rate has been used in the design and analyses of the plant.

4.4.2.10.3 Uncertainties Due to Inlet Flow Maldistribution

The effects of uncertainties in the inlet flow maldistribution criteria used in the core thermal analyses is discussed in Subparagraph 4.4.3.1.2.

4.4.2.10.4 Uncertainty in DNB Correlation

The uncertainty in the DNB correlation (Paragraph 4.4.2.3) can be written as a statement on the probability of not being in DNB based on the statistics of the DNB data. This is discussed in Subparagraph 4.4.1.1.

4.4.2.10.5 Uncertainties in DNBR Calculations

The uncertainties in the DNBRs calculated by THINC analysis (see Subparagraph 4.4.3.4.1) due to uncertainties in the nuclear peaking factors are accounted for by applying conservatively high values of the nuclear peaking factors and including measurement error allowances. In addition, conservative values for the engineering hot channel factors are used as discussed in Subparagraph 4.4.2.3.4. The results of a sensitivity study (Reference 52) with THINC-IV show that the minimum DNBR in the hot channel is relatively insensitive to variations in the core wide radial power distribution (for the same value of $F^N_{\Delta H}$).

The ability of the THINC-IV computer code to accurately predict flow and enthalpy distributions in rod bundles is discussed in Subparagraph 4.4.3.4.1 and in Reference 63. Studies have been performed (Reference 52) to determine the sensitivity of the minimum DNBR in the hot channel to the void fraction correlation (see also Subparagraph 4.4.2.8.3); the inlet velocity and exit pressure distributions assumed as boundary conditions for the analysis; and the grid pressure loss coefficients. The results of these studies show that the minimum DNBR in the hot channel is relatively insensitive to variations in these parameters. The range of variations considered in these studies covered the range of possible variations in these parameters.

4.4.2.10.6 Uncertainties in Flow Rates

The uncertainties associated with loop flow rates are discussed in Section 5.1. For core thermal performance evaluations, a Thermal Design Loop Flow is used which is less than the Best Estimate Loop Flow (approximately 6% for the four-loop plant). In addition another 9.0%* of the Thermal Design Flow is assumed to be ineffective for core heat removal capability because it

* The maximum bypass flow has increased to 9.1%. This is applicable to Units 1 and 2, with or without the H-8 control rod assembly.

bypasses the core through the various available vessel flow paths described in Subparagraph 4.4.3.1.1.

4.4.2.10.7 Uncertainties in Hydraulic Loads

As discussed in Subparagraph 4.4.2.7.2, hydraulic loads on the fuel assembly are evaluated for a pump overspeed transient which create flow rates 20% greater than the Mechanical Design Flow. The Mechanical Design Flow as stated in Section 5.1 is greater than the Best Estimate or most likely flow rate value for the actual plant operating condition.

4.4.2.10.8 Uncertainty in Mixing Coefficient

The value of the mixing coefficient, TDC, used in THINC analyses for this application is 0.038.

The results of the mixing tests done on 17 x 17 geometry, as discussed in Subparagraph 4.4.2.3.3, had a mean value of TDC of 0.059 and standard deviation of $\sigma = 0.007$. Hence the current design value of TDC is almost 3 standard deviations below the mean for 26 inch grid spacing.

4.4.2.11 Plant Configuration Data

Plant configuration data for the thermal-hydraulic and fluid systems external to the core are provided in the appropriate Chapters 5, 6, and 9. Implementation of the Emergency Core Cooling System (ECCS) is discussed in Chapter 15. Some specific areas of interest are the following:

1. Total coolant flow rates for the Reactor Coolant System (RCS) and each loop are provided in Table 5.1-1. Flow rates employed in the evaluation of the core are presented in Section 4.4.

2. Total RCS volume including pressurizer and surge line, RCS liquid volume including pressurizer water at steady state power conditions are given in Table 5.1-1.

3. The flow path length through each volume may be calculated from physical data provided in Section 5.5.

4. The height of fluid in each component of the RCS may be determined from the physical data presented in Section 5.5. The components of the RCS are water filled during power operation with the pressurizer being approximately 60% water filled.

5. Components of the ECCS are to be located so as to meet the criteria for NPSH described in Section 6.3.

6. Line lengths and sizes for the safety injection system are determined so as to guarantee a total system resistance which will provide, as a minimum, the fluid delivery rates assumed in the safety analyses described in Chapter 15.

7. The flow areas for components of the RCS are presented in Section 5.5, Component and Subsystem Design.

8. The steady state pressure drops and temperature distributions through the RCS are presented in Table 5.1-1.

4.4.3 Evaluation

4.4.3.1 Core Hydraulics

4.4.3.1.1 Flow Paths Considered in Core Pressure Drop and Thermal Design

The following flow paths or core bypass flow are considered:

1. Flow through the spray nozzles into the upper head for head cooling purposes.

2. Flow entering into the RCC guide thimbles to cool the control rods.

3. Leakage flow from the vessel inlet nozzle directly to the vessel outlet nozzle through the gap between the vessel and the barrel.

4. Flow introduced between the baffle and the barrel for the purpose of cooling these components.

5. Flow in the gaps between the fuel assemblies on the core periphery and the adjacent baffle wall.

The above contributions are evaluated to confirm that the design value of core bypass flow is met. The design value of core bypass flow for Sequoyah is equal to 9.0%* of the total vessel flow. Of the total allowance, 5.5% is associated with the internals (Items 1, 3, 4, and 5 above) and 3.5%** for the core. Calculations have been performed using drawing tolerances on a worst case basis and accounting for uncertainties in pressure losses. Based on these calculations, the core bypass flow for Sequoyah is <9.0%.*** This design bypass value is also used in the evaluation of the core pressure drops quoted in Table 4.4.2-1, and the determination of reactor flow rates in Section 5.1.

Flow model test results for the flow path through the reactor are discussed in Section 4.4.2.8.2.

4.4.3.1.2 Inlet Flow Distributions

Data has been considered from several 1/7 scale hydraulic reactor model tests (References 56, 57, and 64) in arriving at the core inlet flow maldistribution criteria to be used in the THINC analyses (see Subparagraph 4.4.3.4.1). THINC I analyses made using this data have indicated that a conservative design basis is to consider a 5 percent reduction in the flow to the hot assembly (Reference 65). The same design basis of 5% reduction to the hot assembly inlet is used in THINC IV analyses.

---

* The maximum bypass flow is 9.1%. This is applicable to Units 1 and 2, with or without the H-8 control rod assembly.

** The bypass flow associated with the core has increased to 3.6%. This is applicable to Units 1 and 2, with or without the H-8 control rod assembly.

*** The maximum bypass flow is 9.1%. This is applicable to Units 1 and 2, with or without the H-8 control rod assembly.

The experimental error estimated in the inlet velocity distribution has been considered as outlined in Reference 52 where the sensitivity of changes in inlet velocity distributions to hot channel thermal performance is shown to be small. Studies (Reference 52) made with the improved THINC model (THINC-IV) show that it is adequate to use the 5% reduction in inlet flow to the hot assembly for a loop out of service based on the experimental data in References 56 and 57.

The effect of the total flow rate on the inlet velocity distribution was studied in the experiments of Reference 56. As was expected, on the basis of the theoretical analysis, no significant variation could be found in inlet velocity distribution with reduced flow rate.

4.4.3.1.3 Empirical Friction Factor Correlations

Two empirical friction factor correlations are used in the THINC-IV computer code (described in Subparagraph 4.4.3.4.1).

The friction factor in the axial direction, parallel to the fuel rod axis, is evaluated using the Novendstern-Sandberg correlation (Reference 66). This correlation consists of the following:

1. for isothermal conditions, this correlation uses the Moody (Reference 59) friction factor including surface roughness effects,

2. under single-phase heating conditions a factor is applied based on the values of the coolant density and viscosity at the temperature of the heated surface and at the bulk coolant temperature and

3. under two-phase flow conditions the homogeneous flow model proposed by Owens (Reference 67) is used with a modification to account for a mass velocity and heat flux effect.

The flow in the lateral directions, normal to the fuel rod axis, views the reactor core as a large tube bank. Thus, the lateral friction factor proposed by Idel' chik (Reference 58) is applicable. This correlation is of the form

$$F_L = ARe_L^{-0.2} \qquad (4.4\text{-}18)$$

where:

A is a function of the rod pitch and diameter as given in Reference 58.

Re_L is the lateral Reynolds number based on the rod diameter.

Extensive comparisons of THINC-IV predictions using these correlations to experimental data are given in Reference 63, and verify the applicability of these correlations in PWR design.

4.4.3.2 Influence of Power Distribution

The core power distribution which is largely established at beginning of life by fuel enrichment, loading pattern, and core power level is also a function of variables such as control rod worth and position, and fuel depletion throughout lifetime. Radial power distributions in various planes

of the core are often illustrated for general interest, however, the core radial enthalpy rise distribution as determined by the integral of power up each channel is of greater importance for DNB analyses. These radial power distributions, characterized by $F^N_{\Delta H}$ (defined in Subsection 4.3.2.2.1) as well as axial heat flux profiles are discussed in the following two sections.

4.4.3.2.1 Nuclear Enthalpy Rise Hot-Channel Factor, $F^N_{\Delta H}$

Given the local power density q' (kW/ft) at a point x, y, z in a core with N fuel rods and height H,

$$F^N_{\Delta H} = \frac{hot\ rod\ power}{average\ rod\ power} = \frac{\mathrm{Max}\int_o^H q'\ (xo, yo, z)dz}{\frac{1}{N}\sum allrods\int_o^H q'\ (x, y, z)dz} \qquad (4.4\text{-}19)$$

The way in which $F^N_{\Delta H}$ is used in the DNB calculation is important. The location of minimum DNBR depends on the axial profile and the value of DNBR depends on the enthalpy rise to that point. Basically, the maximum value of the rod integral is used to identify the most likely rod for minimum DNBR. An axial power profile is obtained which when normalized to the design value of $F^N_{\Delta H}$, recreates the axial heat flux along the limiting rod. The surrounding rods are assumed to have the same axial profile with rod average powers which are typical of distributions found in hot assemblies. In this manner worst case axial profiles can be combined with worst case radial distributions for reference DNB calculations. It should be noted again that $F^N_{\Delta H}$ is an integral and is used as such in the DNB calculations. Local heat fluxes are obtained by using hot channel and adjacent channel explicit power shapes which take into account variations in horizontal power shapes throughout the core. The sensitivity of the THINC-IV analysis to radial power shapes is discussed in Reference 52.

For operation at a fraction P of full power, the design $F^N_{\Delta H}$ used is given by:

$$F^N_{\Delta H} = F^{RTP}_{\Delta H}\ (1 + 0.3\ (1\text{-}P)) \qquad (4.4\text{-}20)$$

$F^{RTP}_{\Delta H}$ is set by the Core Operating Limits Report. The permitted relaxation of $F^N_{\Delta H}$ is included in the DNB protection setpoints and allows radial power shape changes with rod insertion to the insertion limits, thus allowing greater flexibility in the nuclear design.

4.4.3.2.2 Axial Heat Flux Distributions

As discussed in Paragraph 4.3.2.2, the axial heat flux distribution can vary as a result of rod motion, power change, or due to spatial xenon transients which may occur in the axial direction. Consequently, it is necessary to measure the axial power imbalance by means of the ex-core nuclear detectors (as discussed in Subparagraph 4.3.2.2.7) and protect the core from excessive axial power imbalance. The Reactor Trip System provides automatic reduction of the appropriate trip setpoints on excessive axial power imbalance; that is, when an extremely large axial offset corresponds to an axial shape which could lead to a DNBR which is less than that calculated for the reference DNB design axial shape or excessive fuel centerline temperature.

The reference DNB design axial shape used is a chopped cosine shape with a peak to average value of 1.55.

4.4.3.3 Core Thermal Response

A general summary of the steady-state thermal-hydraulic design parameters including thermal output, flow rates, etc., is provided in Table 4.4.2-1 for all loops in operation, and in Table 4.4.2-2 for operation with one coolant loop out of service.

As stated in Subsection 4.4.1, the design bases of the application are to prevent departure from nucleate boiling and to prevent fuel melting for Condition I and II events. The protective systems described in Chapter 7 (Instrumentation and Controls) are designed to meet these bases. The response of the core to Condition II transients is given in Chapter 15.

4.4.3.4 Analytical Techniques

4.4.3.4.1 Core Analysis

The objective of reactor core thermal design is to determine the maximum heat removal capability in all flow subchannels and show that the core safety limits (as presented in the SQN Technical Specifications) are not exceeded while compounding engineering and nuclear effects. The thermal design takes into account local variations in dimensions, power generation, flow redistribution, and mixing. THINC-IV is a realistic three-dimensional matrix model which has been developed to account for hydraulic and nuclear effects on the enthalpy rise in the core (References 52 and 63). The behavior of the hot assembly is determined by superimposing the power distribution among the assemblies upon the inlet flow distribution while allowing for flow mixing and flow distribution between assemblies. The average flow and enthalpy in the hottest assembly is obtained from the core-wide, assembly by assembly analysis. The local variations in power, fuel rod and pellet fabrication, and mixing within the hottest assembly are then superimposed on the average conditions of the hottest assembly in order to determine the conditions in the hot channel.

The following sections describe the use of the THINC Code in the thermal-hydraulic design evaluation to determine the conditions in the hot channel and to assure that the safety related design bases are not violated.

Steady State Analysis

The THINC-IV computer program as approved by the NRC (Reference 43) is used to determine coolant density, mass velocity, enthalpy, vapor void, static pressure, and DNBR distributions along parallel flow channels within a reactor core under all expected operating conditions. The THINC-IV code is described in detail in References 52 and 63, including models and correlations used. In addition, a discussion on experimental verification of THINC IV is given in Reference 63.

The effect of crud on the flow and enthalpy distribution in the core is accounted for directly in the THINC-IV evaluations by assuming a crud thickness several times that which would be expected to occur. This results in slightly conservative evaluations of the minimum DNBR.

Estimates of uncertainties are discussed in section 4.4.2.10.

Experimental Verification

Extensive experimental verification of THINC-IV is presented in Reference 63.

The THINC-IV analysis is based on a knowledge and understanding of the heat transfer and hydrodynamic behavior of the coolant flow and the mechanical characteristics of the fuel elements. The use of the THINC-IV analysis provides a realistic evaluation of the core performance and is used in the thermal analyses as described above.

Transient Analysis

The THINC-IV thermal-hydraulic computer code does not have a transient capability. Since the third section of the THINC-I program (Reference 41) does have this capability, this code (THINC-III) continues to be used for transient DNB analysis.

The conservation equations needed for the transient analysis are included in THINC-III by adding the necessary accumulation terms to the conservation equations used in the steady-state (THINC-I) analysis. The input description must now include one or more of the following time dependent arrays:

1. inlet flow variation,
2. heat flux distribution,
3. inlet pressure history.

At the beginning of the transient, the calculation procedure is carried out as in the steady state analysis. The THINC-III code is first run in the steady state mode to ensure conservatism with respect to THINC-IV and in order to provide the steady state initial conditions at the start of the transient. The time is incremented by an amount determined either by the user or by the program itself. At each new time step the calculations are carried out with the addition of the accumulation terms which are evaluated using the information from the previous time step. This procedure is continued until a preset maximum time is reached.

At preselected intervals, a complete description of the coolant parameter distributions within the array as well as DNB are printed out. In this manner the variation of any parameter with time can be readily determined.

At various times during the transient, steady state THINC-IV is applied to show that the application of the transient version of THINC-I is conservative.

The THINC-III code does not have the capability for evaluating fuel rod thermal response. This is treated by the methods described in Subsection 15.1.9.

4.4.3.4.2 Fuel Temperatures

As discussed in Paragraph 4.4.2.2, the fuel rod behavior is evaluated utilizing a semi-empirical thermal model which considers in addition to the thermal aspects such items as clad creep, fuel

swelling, fission gas release, release of absorbed gases, release of helium from IFBA, if present, cladding corrosion and elastic deflection, and helium solubility.

A detailed description of the thermal model can be found in References 85 and 91.

4.4.3.4.3 Hydrodynamic Instability

The analytical methods used to access hydraulic instability are discussed in Paragraph 4.4.3.5.

4.4.3.5 Hydrodynamic and Flow Power Coupled Instability

Boiling flow may be susceptible to thermohydrodynamic instabilities (Reference 73). These instabilities are undesirable in reactors since they may cause a change in thermohydraulic conditions that may lead to a reduction in the DNB heat flux relative to that observed during a steady flow condition or to undesired forced vibrations of core components. Therefore, a thermohydraulic design criterion was developed which states that modes of operation under Condition I and II events shall not lead to thermohydrodynamic instabilities.

Two specific types of flow instabilities are considered for Westinghouse PWR operation. These are the Ledinegg or flow excursion type of static instability and the density wave type of dynamic instability.

A Ledinegg instability involves a sudden change in flow rate from one steady state to another. This instability occurs (reference 73) when the slope of the reactor coolant system pressure drop-flow rate curve

$\frac{\partial \Delta P}{\partial G_{internal}}$ becomes algebraically smaller than the loop supply (pump head) pressure drop-flow rate curve $\frac{\partial \Delta P}{\partial G_{external}}$

The criterion for stability is thus $\frac{\partial \Delta P}{\partial G_{internal}} > \frac{\partial \Delta P}{\partial G_{external}}$

The W pump head curve has a negative slope ($\partial \Delta P/\partial G$ external < 0) whereas the reactor coolant system pressure drop-flow curve has a positive slope ($\partial \Delta P/\partial G1$ internal > 0) over the Condition I and Condition II operational ranges. Thus, the Ledinegg instability will not occur.

The mechanism of density wave oscillations in a heated channel has been described by Lahey and Moody (reference 45). Briefly, an inlet flow fluctuation produces an enthalpy perturbation. This perturbs the length and the pressure drop of the single phase region and causes quality or void perturbations in the two-phase regions which travel up the channel with the flow. The quality and length perturbations in the two-phase region create two-phase pressure drop perturbations. However, since the total pressure drop across the core is maintained by the characteristics of the fluid system external to the core, then the two-phase pressure drop perturbation feeds back to the single phase region. These resulting perturbations can be either attenuated or self-sustained.

A simple method has been developed by Ishii (Reference 68) for parallel closed channel systems to evaluate whether a given condition is stable with respect to the density wave type of dynamic instability. This method had been used to assess the stability of typical Westinghouse reactor designs (References 69, 71, 74) under Condition I and II operation. The results indicate that a large margin to density wave instability exists, e.g., increases on the order of 200% of rated reactor power would be required for the predicted inception of this type of stability.

The application of the method of Ishii (Reference 68) to Westinghouse reactor designs is conservative due to the parallel open channel feature of Westinghouse PWR cores. For such cores, there is little resistance to lateral flow leaving the flow channels of high power density. There is also energy transfer from channels of high power density to lower power density channels. This coupling with cooler channels has led to the opinion that an open channel configuration is more stable than the above closed channel analysis under the same boundary conditions. Flow stability tests (Reference 75) have been conducted where the closed channel systems were shown to be less stable than when the same channels were cross connected at several locations. The cross connections were such that the resistance to channel cross flow and enthalpy perturbations would be greater than that which would exist in a PWR core which has a relatively low resistance to cross flow.

Flow instabilities which have been observed have occurred almost exclusively in closed channel systems operating at low pressures relative to the Westinghouse PWR operating pressures. Kao, Morgan and Parker (Reference 76) analyzed parallel closed channel stability experiments simulating a reactor core flow. These experiments were conducted at pressures up to 2200 psia. The results showed that for flow and power levels typical of power reactor conditions, no flow oscillations could be induced above 1200 psia.

Additional evidence that flow instabilities do not adversely affect thermal margin is provided by the data from the rod bundle DNB tests. Many Westinghouse rod bundles have been tested over wide ranges of operating conditions with no evidence of premature DNB or of inconsistent data which might be indicative of flow instabilities in the rod bundle.

In summary, it is concluded that thermohydrodynamic instabilities will not occur under Condition I and II modes of operation for Westinghouse PWR reactor designs. A large power margin (greater than doubling rated power) shows no predicted inception of such instabilities. Analysis has been performed which shows that minor plant to plant differences in Westinghouse reactor designs such as fuel assembly arrays, core power flow ratios, fuel assembly length, etc. will not result in gross deterioration of the above power margins.

4.4.3.6 Temperature Transient Effects Analysis

Waterlogging damage of a fuel rod could occur as a consequence of a power increase on a rod after water has entered the fuel rod through a clad defect. Water entry will continue until the fuel rod internal pressure is equal to the reactor coolant pressure. A subsequent power increase raises the temperature and, hence, could raise the pressure of the water contained within the fuel rod. The increase in hydrostatic pressure within the fuel rod then drives a portion of the water from the fuel rod through the water entry defect. Clad distortion and/or rupture can occur if the fuel rod internal pressure increase is excessive due to insufficient venting of water to the reactor coolant. This occurs when there is both a rapid increase in the temperature of the water within the fuel rod and a small defect. Zircaloy clad fuel rods which have failed due to

waterlogging (References 78 and 79) indicate that very rapid power transients are required for fuel failure. Normal operational transients are limited to about 40 cal/gm-min. (peak rod) while the Spert tests (Reference 78) indicate that 120 to 150 cal/gm is required to rupture the clad even with very short transients (5.5 msec. period). Release of the internal fuel rod pressure is expected to have a minimal effect on the reactor coolant system (Reference 78) and is not expected to result in failure of additional fuel rods (Reference 79). Ejection of fuel pellet fragments into the coolant stream is not expected (References 78 and 79). A clad breech due to waterlogging is thus expected to be similar to any fuel rod failure mechanism which exposes fuel pellets to the reactor coolant stream. Waterlogging has not been identified as the mechanism for clad distortion or perforation of any Westinghouse Zircaloy-4 clad fuel rods.

4.4.3.7 Potentially Damaging Temperature Effects During Transients

The fuel rod experiences many operational transients (intentional maneuvers) during its residence in the core. A number of thermal effects must be considered when analyzing the fuel rod performance.

The clad can be in contact with the fuel pellet at some time in the fuel lifetime. Clad-pellet interaction occurs if the fuel pellet temperature is increased after the clad is in contact with the pellet. Clad-pellet interaction is discussed in Subparagraph 4.2.1.3.1.

Increasing the fuel temperature results in an increased fuel rod internal pressure. One of the fuel rod design bases limits the fuel rod internal pressures such that clad rupture due to high internal gas pressure is precluded (Subparagraph 4.2.1.1.1).

The potential effects of operation with waterlogged fuel are discussed in Paragraph 4.4.3.6 which concluded that waterlogging is not a concern during operational transients.

Clad flattening, as noted in Subparagraph 4.2.1.3.1, has been observed in some operating power reactors. Thermal expansion (axial) of the fuel rod stack against a flattened section of clad could cause failure of the clad. This is no longer a concern because clad flattening is precluded during the fuel residence in the core. (See Subparagraph 4.2.1.3.1).

There can be a differential thermal expansion between the fuel rods and the guide thimbles during a transient. Excessive bowing of the fuel rods could occur if the grid assemblies did not allow axial movement of the fuel rods relative to the grids. Thermal expansion of the fuel rods is considered in the grid design so that axial loads imposed on the fuel rods during a thermal transient will not result in excessively bowed fuel rods (See Subparagraph 4.2.1.2.2).

4.4.3.8 Energy Release During Fuel Element Burnout

As discussed in Paragraph 4.4.3.3 the core is protected from going through DNB over the full range of possible operating conditions. In the extremely unlikely event that DNB should occur, the clad temperature will rise due to the steam blanketing at the rod surface and the consequent degradation in heat transfer. During this time there is a potential for chemical reaction between the cladding and the coolant. However, because of the relatively good film boiling heat transfer following DNB, the energy release resulting from this reaction is insignificant compared to the power produced by the fuel.

DNB With Physical Burnout - Westinghouse (Reference 72) has conducted DNB tests in a 25-rod bundle where physical burnout occurred with one rod. After this occurrence, the 25 rod test section was used for several days to obtain more DNB data from the other rods in the bundle. The burnout and deformation of the rod did not affect the performance of neighboring rods in the test section during the burnout or the validity of the subsequent DNB data points as predicted by the W-3 correlation. No occurrences of flow instability or other abnormal operation were observed.

DNB With Return to Nucleate Boiling - Additional DNB tests have been conducted by Westinghouse (Reference 80) in 19 and 21 rod bundles. In these tests, DNB without physical burnout was experienced more than once in single rod in the bundles for short periods of time. Each time, a reduction in power of approximately 10% was sufficient to reestablish nucleate boiling on the surface of the rod. During these and subsequent tests, no adverse effects were observed on this rod or any other rod in the bundle as a consequence of operating in DNB.

4.4.3.9 Energy Release or Rupture of Waterlogged Fuel Elements

A full discussion of waterlogging including energy release is contained in Paragraph 4.4.3.6. It is noted that the resulting energy release is not expected to affect neighboring fuel rods.

4.4.3.10 Fuel Rod Behavior Effects from Coolant Flow Blockage

Coolant flow blockages can occur within the coolant channels of a fuel assembly or external to the reactor core. The effects of fuel assembly blockage within the assembly on fuel rod behavior is more pronounced than external blockages of the same magnitude. In both cases the flow block- ages cause local reductions in coolant flow. The amount of local flow reduction, where it occurs in the reactor, and how far along the flow stream the reduction persists are considerations which will influence the fuel rod behavior. The effects of coolant flow blockages in terms of maintaining rated core performance are determined both by analytical and experimental methods. The experimental data are usually used to augment analytical tools such as computer programs similar to the THINC-IV program. Inspection of the DNB correlation (Paragraph 4.4.2.3 and Reference 44) shows that the predicted DNBR is dependent upon the local values of quality and mass velocity.

The THINC-IV code is capable of predicting the effects of local flow blockages on DNBR within the fuel assembly on a subchannel basis, regardless of where the flow blockage occurs. In Reference 63, it is shown that for a fuel assembly similar to the Westinghouse design, THINC-IV accurately predicts the flow distribution within the fuel assembly when the inlet nozzle is completely blocked. Full recovery of the flow was found to occur about 30 inches downstream of the blockage. With the reactor operating at the nominal full power conditions specified in Table 4.4.2-1, the effects of an increase in enthalpy and decrease in mass velocity in the lower portion of the fuel assembly would not result in the reactor violating the safety analysis DNBR limit.

From a review of the open literature it is concluded that flow blockage in "open lattice cores" similar to the Westinghouse cores cause flow perturbations which are local to the blockage. For

instance, A. Oktsubo, et. al., (Reference 81), show that the mean bundle velocity is approached asymptotically about 4 inches downstream from a flow blockage in a single flow cell. Similar results were also found for 2 and 3 cells completely blocked.

Basmer (Reference 82), et. al., tested an open lattice fuel assembly in which 41% of the subchannels were completely blocked in the center of the test bundle between spacer grids. Their results show the stagnant zone behind the flow blockage essentially disappears after 1.65 L/De or about 5 inches for their test bundle. They also found that leakage flow through the blockage tended to shorten the stagnant zone or in essence the complete recovery length. Thus, local flow blockages within a fuel assembly have little effect on subchannel enthalpy rise. The reduction in local mass velocity is then the main parameter which affects the DNBR. If the Sequoyah plants were operating at full power and nominal steady state conditions as specified in Table 4.4.2-1, a reduction in local mass velocity greater than 76% would be required to reduce the DNBR to the safety analysis DNBR limit. The above mass velocity effect on the DNB correlation was based on the assumption of fully developed flow along the full channel length. In reality a local flow blockage is expected to promote turbulence and thus would likely not effect DNBR at all.

Coolant flow blockages induce local crossflows as well as promote turbulence. Fuel rod behavior is changed under the influence of a sufficiently high crossflow component. Fuel rod vibration could occur, caused by this crossflow component, through vortex shedding or turbulent mechanisms. If the crossflow velocity exceeds the limit established for fluid elastic stability, large amplitude whirling results. The limits for a controlled vibration mechanism are established from studies of vortex shedding and turbulent pressure fluctuations. The crossflow velocity required to exceed fluid elastic stability limits is dependent on the axial location of the blockage and the characterization of the crossflow (jet flow or not). These limits are greater than those for vibratory fuel rod wear. Crossflow velocity above the established limits can lead to mechanical wear of the fuel rods at the grid support locations. Fuel rod wear due to flow induced vibration is considered in the fuel rod fretting evaluation (Section 4.2).

4.4.4 Testing And Verification

4.4.4.1 Tests Prior to Initial Criticality

A reactor coolant flow test (pre-operational test W-1.8), as noted in Table 14.1-2, was performed following fuel loading but prior to initial criticality. Coolant loop pressure drop data was obtained in this test. This data in conjunction with coolant pump performance information allows determination of the coolant flow rates at reactor operating conditions. This test verified that proper coolant flow rates have been used in the core thermal and hydraulic analysis.

4.4.4.2 Initial Power and Plant Operation

Core power distribution measurements are made at several core power levels (see Subparagraph 4.3.2.2.7). These tests are used to insure that conservative peaking factors are used in the core thermal and hydraulic analysis.

Additional demonstration of the overall conservatism of the THINC analysis was obtained by comparing THINC predictions to incore thermocouple measurements. These measurements were performed on the Zion reactor (Reference 84). No further in-pile testing is planned.

4.4.4.3 Component and Fuel Inspections

Inspections performed on the manufactured fuel are delineated in Paragraph 4.2.1.4. Fabrication measurements critical to thermal and hydraulic analysis are obtained to verify that the engineering hot channel factors employed in the design analyses (Subparagraph 4.4.2.3.4) are met.

4.4.5 Instrumentation Application

4.4.5.1 Incore Instrumentation

Instrumentation is located in the core so that by correlating movable neutron detector information with fixed thermocouple information radial, axial, and azimuthal core characteristics may be obtained for all core quadrants.

The incore instrumentation system is comprised of thermocouples, positioned to measure fuel assembly coolant outlet temperatures at preselected positions, and fission chamber detectors positioned in guide thimbles which run the length of selected fuel assemblies to measure the neutron flux distribution. Figure 4.4.5-1 shows the number and location of instrumented assemblies in the core.

The movable incore neutron detector system is used for detailed mapping of the core. The incore instrumentation system is described in more detail in Paragraph 7.7.1.9.

The core-exit thermocouples provide an information only backup to the flux monitoring instrumentation for monitoring power distribution.

The Incore Instrumentation is provided to obtain data from which fission power density distribution in the core, coolant enthalpy distribution in the core, and fuel burnup distribution may be determined.

4.4.5.2 Overtemperature and Overpower ΔT Instrumentation

The Overtemperature ΔT trip protects the core against low DNBR. The Overpower ΔT trip protects against excessive power (fuel rod rating protection).

As discussed in Subparagraph 7.2.1.1.2, factors included in establishing the Overtemperature ΔT and Overpower ΔT trip setpoints includes the reactor coolant temperature in each loop and the axial distribution of core power, as applicable, through the use of the two section ex-core neutron detectors.

4.4.5.3 Instrumentation to Limit Maximum Power Output

The outputs of the three ranges (source, intermediate, and power) of nuclear instruments, are used to limit the maximum power output of the reactor within their respective ranges.

There are six detectors installed around the reactor in the primary shield radial locations. Two fission chamber assemblies for the source/intermediate range are installed on opposite "flat" portions of the core containing the primary startup sources. Four dual section uncompensated ionization chamber assemblies for the power range installed vertically at the four corners of the core and located equidistant from the reactor vessel at all points and, to minimize neutron flux pattern distortions, within one foot of the reactor vessel. Each power range detector provides two signals corresponding to the neutron flux in the upper and in the lower sections of a core quadrant. The three ranges of instruments are used as inputs to monitor neutron flux from a completely shutdown condition to 120 percent of full power.

The difference in neutron flux between the upper and lower sections of the power range detectors is used to limit the trip setpoints, as applicable, and to provide the operator with an indication of the core power axial offset. In addition, the output of the power range channels are used for:

1. the rod speed control function,

2. to alert the operator to an excessive power unbalance between the quadrants,

3. protecting the core against the consequences of rod ejection accidents, and

4. protecting the core against the consequences of adverse power distributions resulting from dropped rods.

Details of the neutron detectors and nuclear instrumentation design and the control and trip logic are given in Chapter 7. The limits on neutron flux operation and trip setpoints are given in the SQN Technical Specifications.

4.4.6 References

1. J. A. Christensen, R. J. Allio and A. Biancheria, "Melting Point of Irradiated UO_2," WCAP-6065, February, 1965.

2. D. H. Risher, Jr., "An Evaluation of the Rod Ejection Accident in Westinghouse Pressurized Water Reactors Using Spatial Kinetics Methods," WCAP-7588, Revision 1, December, 1971.

3. Supplemental information on fuel design transmitted from R. Salvatori, Westinghouse NES, to D. Knuth, AEC, as attachments to letters NS-SL-518 (12/22/72), NS-SL-521 (12/29/72), NS-SL-524 (12/29/72) and NS-SL-543 (1/12/73), (Westinghouse Proprietary), and supplemental information on fuel design transmitted from R. Salvatori, Westinghouse NES, to D. Knuth, AEC, as attachments to letters NS-SL-527 (1/12/73) and NS-SL-544 (1/12/73).

4. Deleted by Amendment 8.

5. S. Nakazato, E. E. DeMario, "Hydraulic Flow Test of the 17 x 17 Fuel Assembly," WCAP-8278, February 1974 (Westinghouse Proprietary) and WCAP-8279, February, 1974.

6. J. M. Hellman (Ed.), "Fuel Densification Experimental Results and Model for Reactor Application," WCAP-8219, October, 1973.

7. G. Kjaerheim and E. Rolstad, "In Pile Determination of UO_2 Thermal Conductivity, Density Effects and Gap Conductance," HPR-80, December, 1967.

8. G. Kjaerheim, "In-Pile Measurements of Centre Fuel Temperatures and Thermal Conductivity Determination of Oxide Fuels," paper IFA-175 presented at the European Atomic Energy Society Symposium on Performance Experience of Water-Cooled Power Reactor Fuel, Stockholm, Sweden (October 21-22, 1969).

9. I. Cohen, B. Lustman and J. D. Eichenberg, "Measurement of the Thermal Conductivity of Metal-Clad Uranium Oxide Rods during Irradiation," WAPD-228, 1960.

10. D. J. Clough and J. B. Sayers, "The Measurement of the Thermal Conductivity of UO_2 under Irradiation in the Temperature Range 150°-1600°C," AERE-R-4690, UKAEA Research Group, Harwell, December, 1964.

11. J. P. Stora, B. DeBernardy DeSigoyer, R. Delmas, P. Deschamps, C. Ringot and B. Lavaud, "Thermal Conductivity of Sintered Uranium Oxide under In-Pile Conditions," EURAEC-1095, 1964.

12. I. Devold, "A Study of the Temperature Distribution in UO_2 Reactor Fuel Elements," AE-318, Aktiebolaget Atomenergi, Stockholm, Sweden, 1968.

13. M. G. Balfour, J. A. Christensen and H. M. Ferrari, "In-Pile Measurement of UO_2 Thermal Conductivity," WCAP-2923, 1966.

14. R. N. Duncan, "Rabbit Capsule Irradiation of UO_2," CVTR Project, CVNA-142, June, 1962.

15. R. C. Nelson, D. H. Coplin, M. F. Lyons and B. Weidenbaum, "Fission Gas Release from UO_2 Fuel Rods with Gross Central Melting," GEAP-4572, July, 1964.

16. V. C. Howard and T. G. Gulvin, "Thermal Conductivity Determinations on Uranium Dioxide by a Radial Flow Method," UKAEA IG-Report 51, November, 1960.

17. C. F. Lucks and H. W. Deem, "Thermal Conductivity and Electrical Conductivity of UO_2," in Progress Reports Relating to Civilian Applications," BMI-1448 (Rev.) for June, 1960; BMI-1489 (Rev.) for December, 1960 and BMI-1518 (Rev.) for May, 1961.

18. J. L. Daniel, J. Matolich, Jr., and H. W. Deem, "Thermal Conductivity of UO_2," HW-69945, September, 1962.

19. A. D. Feith, "Thermal Conductivity of UO_2 by a Radial Heat Flow Method," TID-21668, 1962.

20. J. Vogt, L. Grandell and U. Runfors, "Determination of the Thermal Conductivity of Unirradiated Uranium Dioxide," AB Atomenergi Report RMB-527, 1964, Quoted by IAEA Technical Report Series No. 59, "Thermal Conductivity of Uranium Dioxide."

21. T. Nishijima, T. Kawada and A. Ishihata, "Thermal Conductivity of Sintered UO_2 and $A1_20_3$ at High Temperatures," J. American Ceramic Society, 48, 31-34 (1965).

22. J. B. Ainscough and M. J. Wheeler, "The Thermal Diffusivity and Thermal Conductivity of Sintered Uranium Dioxide," in "Proceedings of the Seventh Conference on Thermal Conductivity," p. 467, National Bureau of Standards, Washington, 1968.

23. T. G. Godfrey, W. Fulkerson, T. G. Killie, J. P. Moore and D. L. McElroy," "Thermal Conductivity of Uranium Dioxide and Armco Iron by an Improved Radial Heat Flow Technique," ORNL-3556, June, 1964.

24. J. P. Stora, et al., "Thermal Conductivity of Sintered Uranium Oxide Under In-Pile Conditions," EURAEC-1095, August, 1964.

25. A. J. Bush, "Apparatus for Measuring Thermal Conductivity to 2500°C ," Westinghouse Research Laboratories Report 64-1P6-401-R3, February, 1965. (Westinghouse Proprietary).

26. R. R. Asamoto, F. L. Anselin and A. E. Conti, "The Effect of Density on the Thermal Conductivity of Uranium Dioxide," GEAP-5493, April, 1968.

27. O. L. Kruger, "Heat Transfer Properties of Uranium and Plutonium Dioxide," Paper 11-N-68F presented at the Fall meeting of Nuclear Division of the American Ceramic Society, September, 1968, Pittsburgh.

28. J. A. Gyllander, "In-Pile Determination of the Thermal Conductivity of UO_2 in the Range 500-2500°C," AE-411, January, 1971.

29. M. F. Lyons, et al., "UO_2 Powder and Pellet Thermal Conductivity During Irradiation," GEAP-5100-1, March, 1966.

30. D. H. Coplin, et al., "The Thermal Conductivity of UO_2 by Direct In-Reactor Measurements," GEAP-5100-6, March, 1968.

31. A. S. Bain, "The Heat Rating Required to Produce Center Melting in Various UO_2 Fuels," ASTM Special Technical Publication, No. 306, pp. 30-46, Philadelphia, 1962.

32. J. P. Stora, "In-Reactor Measurements of the Integrated Thermal Conductivity of UO_2 - Effect of Porosity," Trans. ANS, 13, 137-138 (1970).

33. International Atomic Energy Agency, "Thermal Conductivity of Uranium Dioxide," Report of the Panel held in Vienna, April, 1965, IAEA Technical Reports Series, No. 59, Vienna, The Agency, 1966.

34. C. G. Poncelet, "Burnup Physics of Heterogeneous Reactor Lattices," WCAP-6069, June, 1965.

35. R. J. Nodvick, "Saxton Core II Fuel Performance Evaluation," WCAP-3385-56, Part II, "Evaluation of Mass Spectrometric and Radiochemical Analyses of Irradiated Saxton Plutonium Fuel," July, 1970.

36. Deleted by Amendment 8.

37. Deleted by Amendment 8.

38. F. E. Motley, F. F. Cadek, "Application of Modified Spacer Factor to L. grid Typical and Cold Wall Cell DNB," WCAP-7988 (Westinghouse Proprietary), and WCAP-8030-A (Non-Proprietary), October, 1972.

39. L. S. Tong, "Boiling Crisis and Critical Heat Flux," AEC Critical Review Series, TID-25887, 1972.

40. K. W. Hill, F. E. Motley, F. F. Cadek, A. H. Wenzel, "Effect of 17 x 17 Fuel Assembly Geometry on DNB," WCAP-8296-P-A (Westinghouse Proprietary) and WCAP-8297 (Non-Proprietary), February, 1976).

41. H. Chelemer, J. Weisman and L. S. Tong, "Subchannel Thermal Analysis of Rod Bundle Cores," WCAP-7015, Revision 1, January, 1969.

42. F. E. Motley and F. F. Cadek, "DNB Tests Results for New Mixing Vane Grids (R), "WCAP-7695-P-A, (Proprietary), and WCAP-7958-A, (Non-Proprietary), January, 1975.

43. Letter from J. F. Stolz (NRC) to C. Eicheldinger (Westinghouse); Subject: Staff Evaluation of WCAP-7956, WCAP-8054, WCAP-8567, and WCAP-8762, April 19, 1978.

44. L. S. Tong, "Prediction of Departure from Nucleate Boiling for an Axially Non-Uniform Heat Flux Distribution," J. Nucl. Energy, 21, 241-248 (1967).

45. R. T. Lahey and F. J. Moody, "The Thermal Hydraulics of a Boiling Water Reactor," American Nuclear Society, 1977.

46. F. F. Cadek, F. E. Motley and D. P. Dominicis, "Effect of Axial Spacing on Interchannel Thermal Mixing with The R Mixing Vane Grid," WCAP-7941-L, June, 1972, (Westinghouse Proprietary), and WCAP-7959, October, 1972.

47. D. S. Rowe, C. W. Angle, "Crossflow Mixing Between Parallel Flow Channels During Boiling, Part II Measurement of Flow and Enthalpy in Two Parallel Channels," BNWL-371, part 2, December, 1967.

48. D. S. Rowe, C. W. Angle, "Crossflow Mixing Between Parallel Flow Channels During Boiling, Part III Effect of Spacers on Mixing Between Two Channels," BNWL-371, part 3, January, 1969.

49. J. M. Gonzalez-Santalo and P. Griffith, "Two-Phase Flow Mixing in Rod Bundle Subchannels," ASME Paper 72-WA/NE-19.

50. F. E. Motley, A. H. Wenzel, F. F. Cadek, "The Effect of 17 x 17 Fuel Assembly Geometry on Interchannel Thermal Mixing," WCAP-8299, March, 1974.

51. F. F. Cadek, "Interchannel Thermal Mixing with Mixing Vane Grids," WCAP-7667-L, May, 1971, (Westinghouse Proprietary), and WCAP-7755, September, 1971.

52. L. E. Hochreiter, "Application of the THINC IV Program to PWR Design," WCAP-8054-P-A, February 1989.

53. F. W. Dittus and L. M. K. Boelter, "Heat Transfer in Automobile Radiators of the Tubular Type," Calif. Univ. Publication in Eng., 2, No. 13, 443-461 (1930).

54. J. Weisman, "Heat Transfer to Water Flowing Parallel to Tube Bundles," Nucl. Sci. Eng., 6, 78-79 (1959).

55. J. R. S. Thom, W. M. Walker, T. A. Fallon and G. F. S. Reising, "Boiling in Sub-cooled Water During Flowup Heated Tubes or Annuli," Proc. Instn. Mech. Engrs., 180, Pt. C, 226-46 (1955-66).

56. G. Hetsroni, "Hydraulic Tests of the San Onofre Reactor Model," WCAP-3269-8, June, 1964.

57. G. Hetsroni, "Studies of the Connecticut-Yankee Hydraulic Model," NYO-3250-2, June, 1965.

58. I. E. Idel'chik, "Handbook of Hydraulic Resistance," AEC-TR-6630, 1960.

59. L. F. Moody, "Friction Factors for Pipe Flow," Transmission of the American Society of Mechanical Engineers, 66, 671-684 (1944).

60. G. W. Maurer, "A Method of Predicting Steady State Boiling Vapor Fractions in Reactor Coolant Channels," WAPD-BT-19, pp. 59-70, June, 1960.

61. P. Griffith, J. A. Clark and W. M. Rohsenow "Void Volumes in Subcooled Boiling Systems," ASME Paper No. 58-HT-19.

62. R. W. Bowring, "Physical Model, Based on Bubble Detachment, and Calculation of Steam Voidage in the Subcooled Region of a Heated Channel," HPR-10, December, 1962.

63. L. E. Hochreiter, H. Chelemer and P. T. Chu, "THINC-IV An Improved Program for Thermal-Hydraulic Analysis of Rod Bundle Cores," WCAP-7956-A, February, 1989.

64. F. D. Carter, "Inlet Orificing of Open PWR Cores," WCAP-9004, January, 1969, (Westinghouse Proprietary), and WCAP-7836, January, 1972.

65. J. Shefcheck, "Application of the THINC Program to PWR Design," WCAP-7359-L, August, 1969, (Westinghouse Proprietary), and WCAP-7838, January, 1972.

66. E. H. Novendstern and R. O. Sandberg, "Single Phase Local Boiling and Bulk Boiling Pressure Drop Correlations," WCAP-2850, April, 1966, (Westinghouse Proprietary), and WCAP-7916, June, 1972.

67. W. L. Owens, Jr., "Two-Phase Pressure Gradient," in International Developments in Heat Transfer, Part II, pp. 363-368, ASME, New York, 1961.

68. P. Saha, M. Ishii, and N. Zuber, "An Experimental Investigation of the Thermally Induced Flow Oscillations in Two-Phase Systems," J. of Heat Transfer, November 1976, pp. 616-622.

69. Virgil C. Summer FSAR. Docket 50-395.

70. Deleted by Amendment 8.

71. Byron/Braidwood FSAR. Docket 50-456.

72. J. Weisman, A. H. Wenzel, L. S. Tong, D. Fitzsimmons, W. Thorne, and J. Batch, "Experimental Determination of the Departure from Nucleate Boiling in Large Rod Bundles at High Pressures," Chem. Eng. Prog. Symp. Ser. 64, No. 82, 114-125 (1968).

73. J. A. Boure, a. E. Bergles and L. S. Tong, "Review of Two-Phase Flow Instability, ASME Paper 71-HT-42, August, 1971.

74. South Texas FSAR, Docket 50-498.

75. S. Kakac, T. N. Veziroglu, K. Akyuzlu, O. Berkol, "Sustained and Transient Boiling Flow Instabilities in a Cross-Connected Four-Parallel-Channel Upflow System," Proc. of 5th International Heat Transfer Conference, Tokyo, September 3-7, 1974.

76. H. S. Kao, T. D. Morgan, and W. B. Parker, "Prediction of Flow Oscillation in Reactor Core Channel," Trans. ANS, Vol. 16, 1973, pp. 212-213.

77. Miller, J. V. (Ed.), "Improved Analytical Models Used In Westinghouse Fuel Rod Design Computations," WCAP-8785, October, 1976.

78. L. A. Stephan, "The Effects of Cladding Material and Heat Treatment on the Response of Waterlogged UO_2 Fuel Rods to Power Bursts," IN-ITR-111, January, 1970.

79. Western New York Nuclear Research Center Correspondence with the AEC on February 11 and August 27, 1971, Docket 50-57.

80. L. S. Tong, et al., "Critical Heat Flux (DNB) in Square and Triangular Array Rod Bundles," presented at the Japan Society of Mechanical Engineers Semi-International Symposium held at Tokyo, Japan, September 4-8, 1967, pages 25-34.

81. A. Oktsubo and S. Uruwashi, "Stagnant Fluid due to Local Flow Blockage," J. Nucl. Sci. Technol. 9, No. 7, 433-434, (1972).

82. P. Basmer, D. Kirsh, and G. F. Schultheiss, "Investigation of the Flow Pattern in the Recirculation Zone Downstream of Local Coolant Blockages in Pin Bundles," Atomwirtschaft, 17, No. 8, 416-417, (1972). (In German).

83. Motley, F. E., Wenzel, A. H. and Cadek, F. F., "Critical Heat Flux Testing of 17 x 17 Fuel Assembly Geometry with 22 inch Grid Spacing," WCAP-8536 (Proprietary) and WCAP-8537 (Non-Proprietary), May, 1975.

84. T. M. Burke, C. E. Meyer, and J. Shefcheck, "Analysis of Data from the Zion (Unit 1) THINC Verification Test," WCAP-8453 (Westinghouse Proprietary) and WCAP-8454, (Non-Proprietary) December, 1974.

85. Leech, W. J., et al, "Revised PAD Code Thermal Safety Model," WCAP-8720, Addendum 2, October 1982.

86. Motley, F. E., Hill, K. W., Cadek, F. F. and Shefcheck, J., "New Westinghouse Correlation WRB-1 for Predicting Critical Heat Flux in Rod Bundles with Mixing Vane Grids", WCAP-8762-P-A (Proprietary), July 1984.

87. Davidson, S. L. (ed.), et al, "VANTAGE 5H Fuel Assembly," WCAP-10444-P-A, Addendum 2A, April 1988.

88. Sharitka, J., (Ed.), "Fuel Rod Bow Evaluation," WCAP-8691 Revision 1, (Proprietary), July 1979.

89. "Partial Response to Request Number 1 for Additional Information on WCAP-8691, Revision 1," letter, E. P. Rahe, Jr. (Westinghouse) to J. R. Miller (NRC), NS-EPR-2515, dated October 9, 1981; "Remaining Response to Request Number 1 for Additional Information on WCAP-8691, Revision 1," letter, E. P. Rahe, Jr. (Westinghouse) to J. R. Miller (NRC), NS-EPR-2572, dated March 16, 1982.

90. Letter from C. Berlinger (NRC) to E. P. Rahe, Jr. (Westinghouse), "Request for Reduction in Fuel Assembly Burnup Limit for Calculation of Maximum Rod Bow Penalty," June 18, 1986.

91. Weiner, R. A., et al, "Improved Fuel Performance Models for Westinghouse Fuel Rod Design and Safety Evaluations," WCAP-10851-P-A, August 1988.

92. Letter from A. C. Thadani (NRC) to W. J. Johnson (Westinghouse), January 31, 1989, Subject: Acceptance for Referencing of Licensing Topical Report, WCAP-9226-P/9227-NP, "Reactor Core Response to Excessive Secondary Steam Releases."

93. Davidson, S. L. (ed.), et al, "VANTAGE 5 Fuel Assembly," WCAP-10444-P-A, Appendix A, September 1985.

94. S. Ray, "MINI Revised Thermal Design Procedure (MINI RTDP)," WCAP-12178-P, Westinghouse Electric Corporation (March 1989).

95. A. J. Friedland, and S. Ray, "Revised Thermal Design Procedure," WCAP-11397 (Proprietary), (February 1987) and Letter, A. C. Thadani (USNRC) to W. J. Johnson (Westinghouse), "Acceptance for Referenceing of Licensing Topical Report WCAP-11397, Revised Thermal Design Procedure," (January 1989).

96. USNRC 1986 Letter, C. H. Barlinger (USNRC) to E. P. Rahe, Jr. (Westinghouse), dated June 18, 1986, entitled: Request for Reduction in Fuel Assembly Burnup Limit for Calculation of Maximum Rod Bow Penalty.

TABLE 4.4.2-1

REACTOR DESIGN COMPARISON TABLE

Thermal and Hydraulic Design Parameters	Sequoyah Units 1 & 2 17 x 17 With Densification	Reference Plant 17 x 17 With Densification
Reactor Core Heat Output, MWt11	3411	3411
Reactor Core Heat Output, BTU/hr	$11,641.7 \times 10^6$	$11,641.7 \times 10^6$
Heat Generated in Fuel, %	97.4	97.4
System Pressure, Nominal, psia	2250	2250
System Pressure, Minimum Steady State, psia	2220	2220
Minimum DNBR at Nominal Conditions		
Typical Flow Channel	2.43	2.04
Thimble (Cold Wall) Flow Channel	2.29	1.71
Minimum DNBR for Design Transients	>1.38	>1.30
DNB Correlation	WRB-1	"L" (W-3 with modified spacer factor)
Total Thermal Flow Rate, lb/hr	138.0×10^6	132.7×10^6
Effective Flow Rate for Heat Transfer, lb/hr	127.7×10^6	126.7×10^6
Effective Flow Area for Heat Transfer, Ft^2	51.1(STD), 51.3 (V-5H)	51.1
Average Velocity Along Fuel Rods, ft/sec	15.6(STD), 15.5 (V5H)	15.7
Average Mass Velocity, lb/hr-ft^2	2.50×10^6 (STD) 2.49×10^6(V5H)	2.48×10^6
Coolant Temperature		
Nominal Inlet, °F	546.7	552.5
Average Rise in Vessel, °F	63.1	64.2
Average Rise in Core, °F	67.6	66.9
Average in Core, °F	582.2	585.9
Average in Vessel, °F	578.2	584.7
Active Heat Transfer, Surface Area, Ft^2	59,700	59,700
Average Heat Flux, BTU/hr-ft^2	189,800	189,800
Maximum Heat Flux, for normal operation BTU/hr-ft^2	440,300[a]	440,300[a]
Average Thermal Output, kW/ft	5.44	5.44
Maximum Thermal Output, for normal operation kW/ft	13.0[a]	12.6[d]
Peak Linear Power for Determination of protection setpoints, kW/ft	21.1[c]	18.0[c]
Pressure Drop[b]		
Across Core, psi	23.4 ± 2.3	25.7 ± 2.6
Across Vessel, including nozzle psi	46.65 ± 4.6	45.1 ± 4.5

(a) This limit is associated with the value of $F_Q = 2.40$
(b) Based on best estimate reactor flow rate as discussed in Section 5.1.
(c) See Subparagraph 4.3.2.2.6.
(d) This limit is associated with the value $F_Q = 2.32$

TABLE 4.4.2-2

THERMAL-HYDRAULIC DESIGN PARAMETERS FOR ONE OF FOUR COOLANT LOOPS OUT OF SERVICE

	Without Loop Stop Valves
Total Core Heat Output, MWt	2388
Total Core Heat Output, 10^6 BTU/hr	8150.2
Heat Generated in Fuel, %	97.4
Nominal System Pressure, psia	2250
Coolant Flow	
Effective Thermal Flow Rate for Heat Transfer, 10^6 lbs/hr	92.0
Effective Flow Area for Heat Transfer, ft^2	51.1 (STD), 51.3 (V5H)
Average Velocity along Fuel Rods, ft/sec	11.1 (STD),11.0 (V5H)
Average Mass Velocity, 10^6 lb/hr-ft^2	1.80 (STD) 1.79 (V5H)
Coolant Temperature, °F	
Design Nominal Inlet	539.6
Average Rise in Core	67.1
Average in Core	574.6
Heat Transfer	
Active Heat Transfer Surface Area, ft^2	59,700
Average Heat Flux, BTU/hr-ft^2	132,900
Minimum DNB Ratio at Nominal Conditions	>2.27
Minimum DNB Ratio for Design and Anticipated Transients	$\geq$1.38

TABLE 4.4.2-3

VOID FRACTIONS AT NOMINAL REACTOR CONDITIONS
WITH DESIGN HOT CHANNEL FACTORS

	Average	Maximum
Core	0.17	----
Hot Subchannel	3.1	12.4

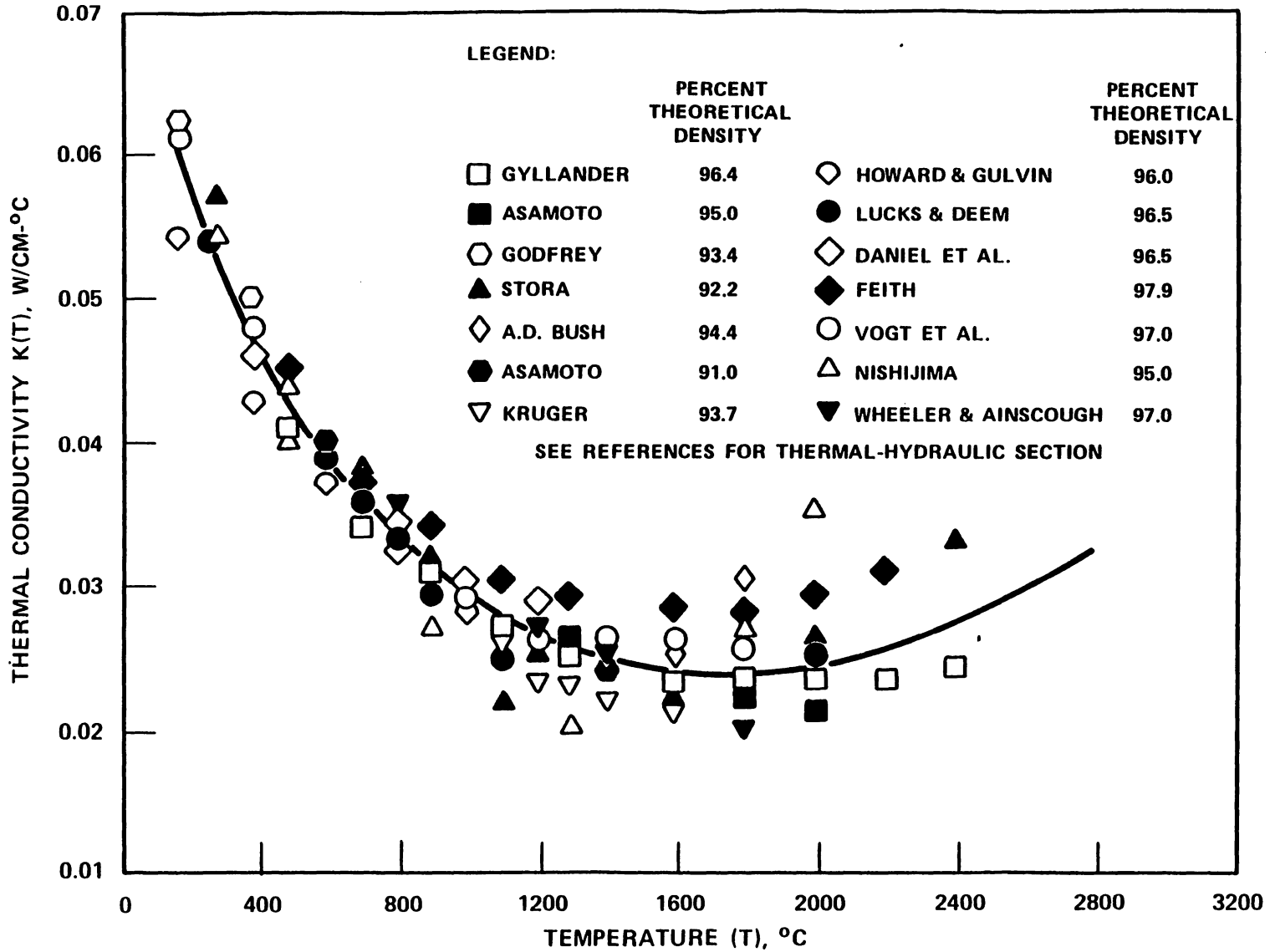

Figure 4.4.2-3. Thermal Conductivity of UO_2 (Data Corrected to 95% Theoretical Density)

Figures 4.4.2-4 and -5 were deleted in Amendment 13

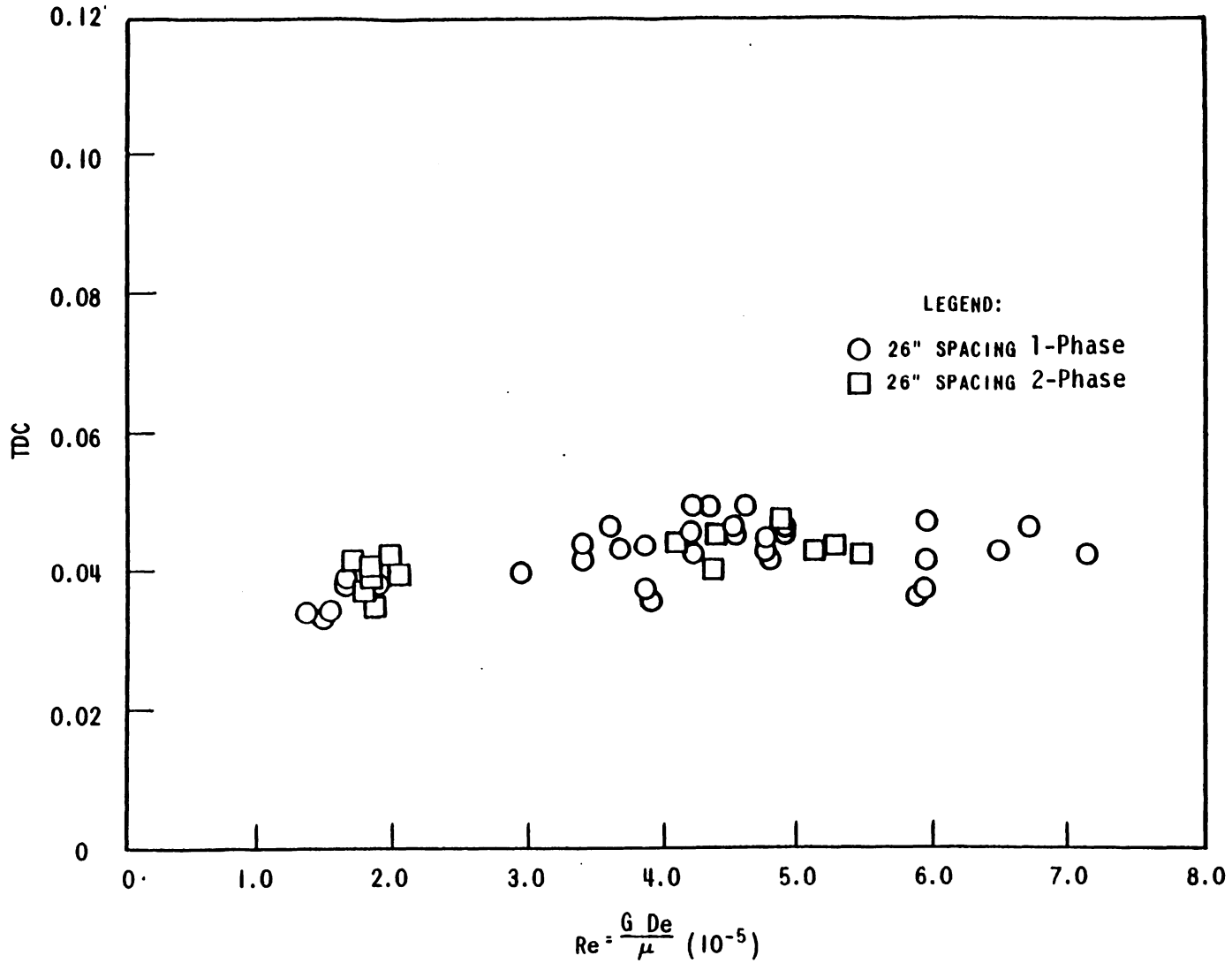

Figure 4.4.2-6. TDC versus Reynolds Number for 26" Grid Spacing

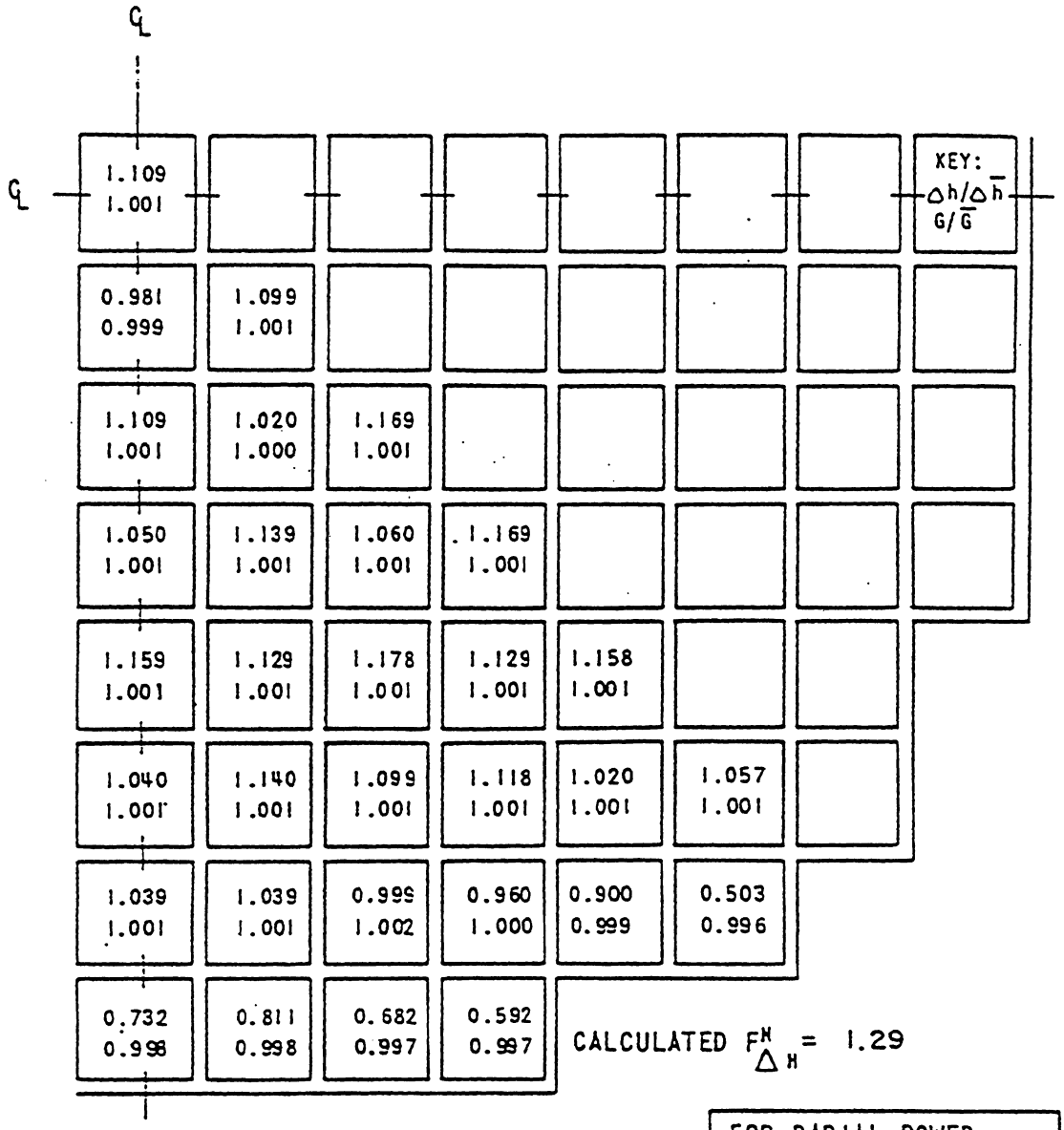

FOR RADIAL POWER DISTRIBUTION NEAR BEGINNING OF LIFE, HOT FULL POWER, EQUILIBRIUM XENON

TYPICAL FIGURE

Figure 4.4.2-7 Normalized Radial Flow and Enthalpy Distribution at 4-Ft. Elevation

REVISED BY AMENDMENT 10

Best Available Historical Image

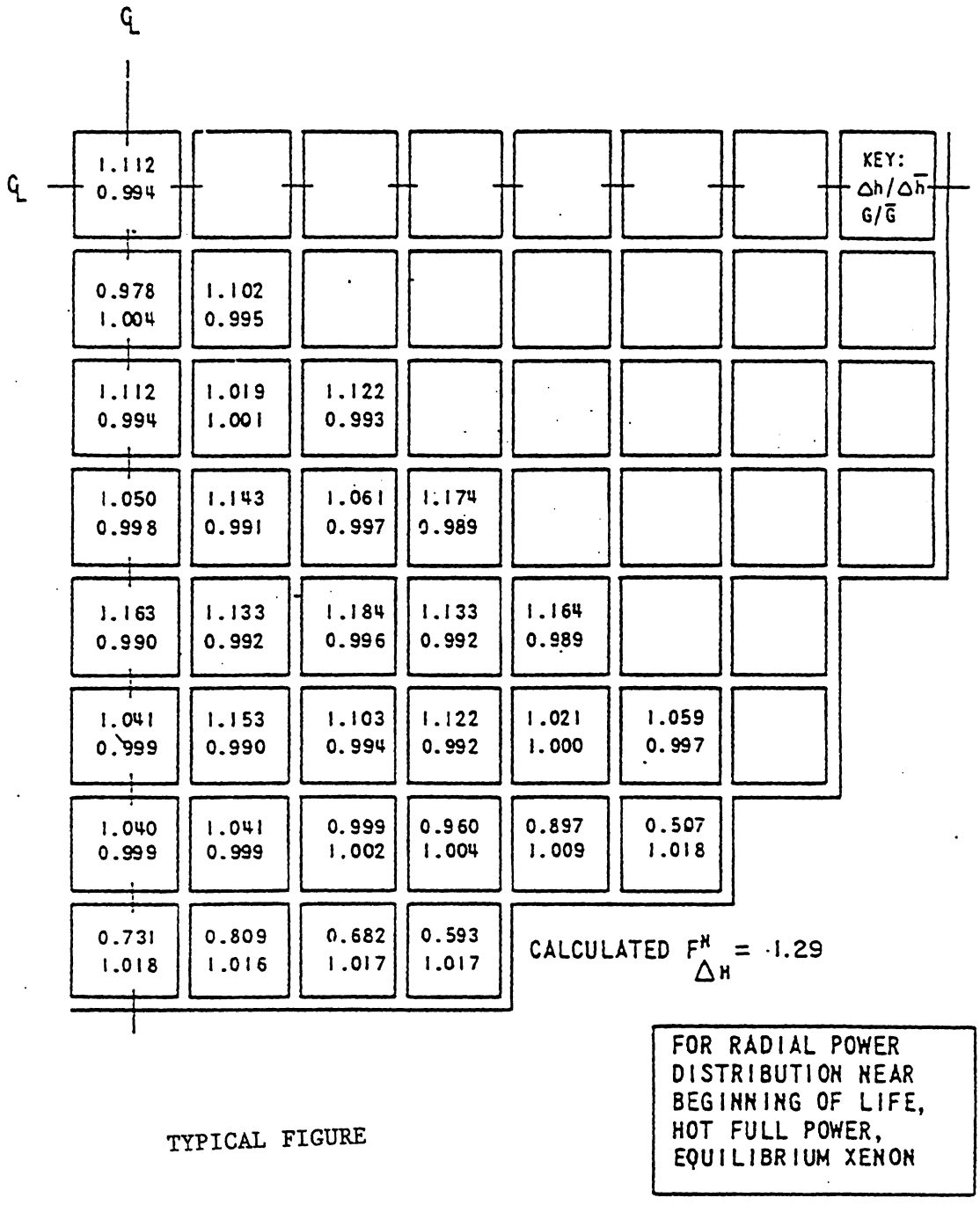

TYPICAL FIGURE

Figure 4.4.2-8 Normalized Radial Flow and Enthalpy Distribution at 8-Ft. Elevation

REVISED BY AMENDMENT 10

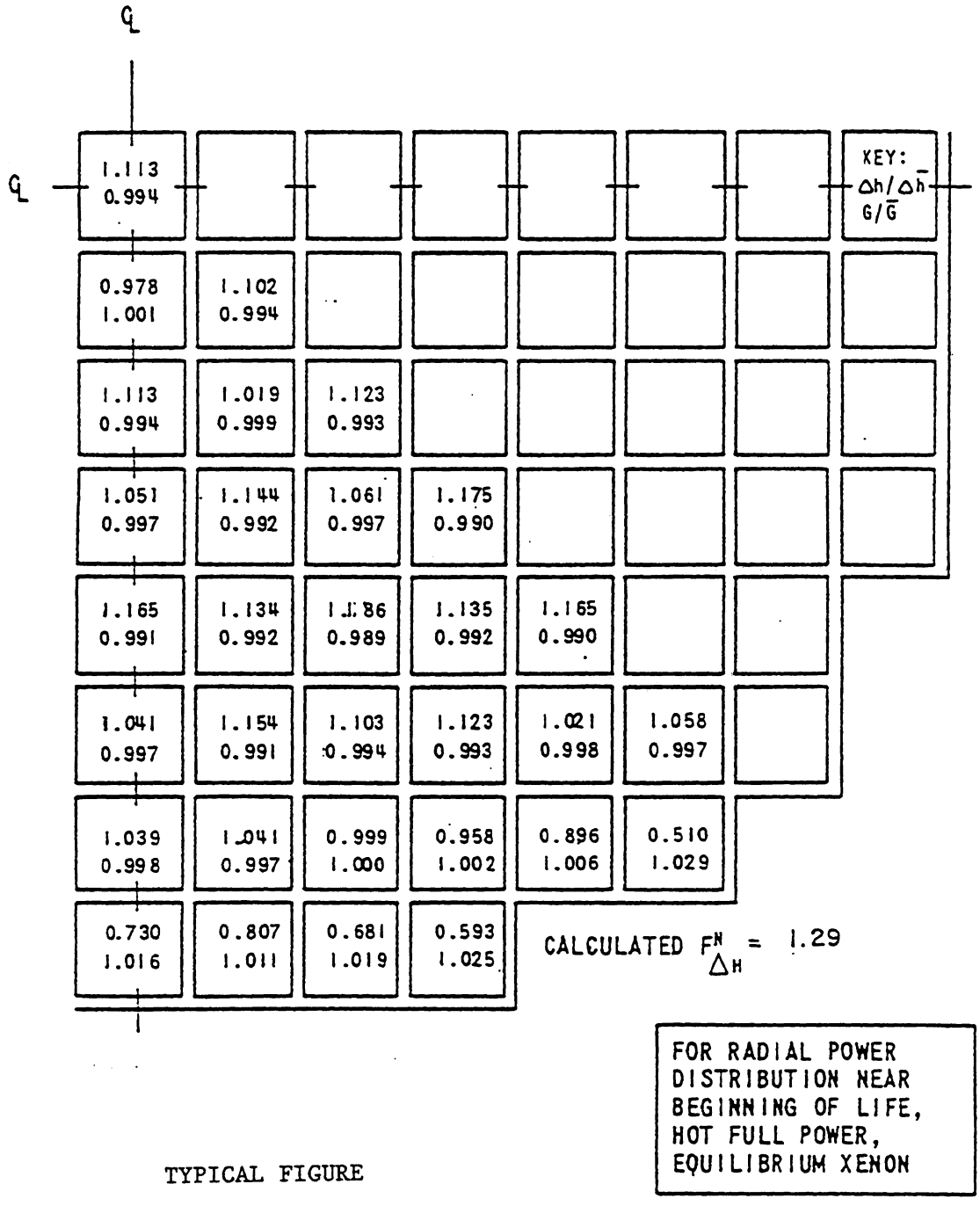

TYPICAL FIGURE

Figure 4.4.2- 9 Normalized Radial Flow and Enthalpy Distribution at 12-Ft. Elevation

REVISED BY AMENDMENT 10

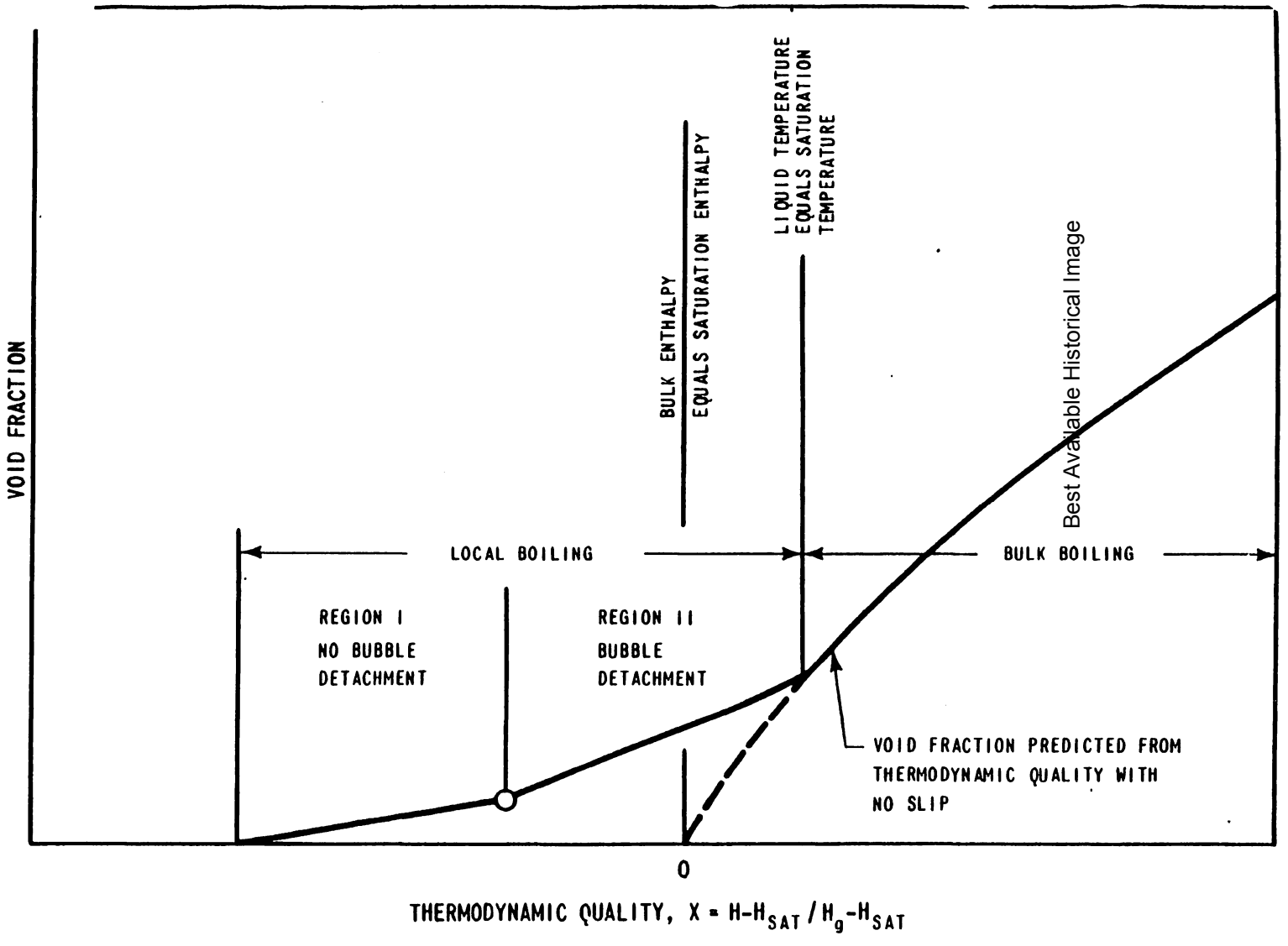

Best Available Historical Image

Figure 4.4.2-10 Void Fraction versus Thermodynamic Quality $H-H_{SAT}/H_g-H_{SAT}$

Note: Location B3 of Unit 2 for the Movable Detector is abandoned in place per DCN 23646A.

THERMOCOUPLE FOR UNIT 1 LOCATION R8 HAS BEEN CAPPED / DISCONNECTED PER DCN SQN-21-017.

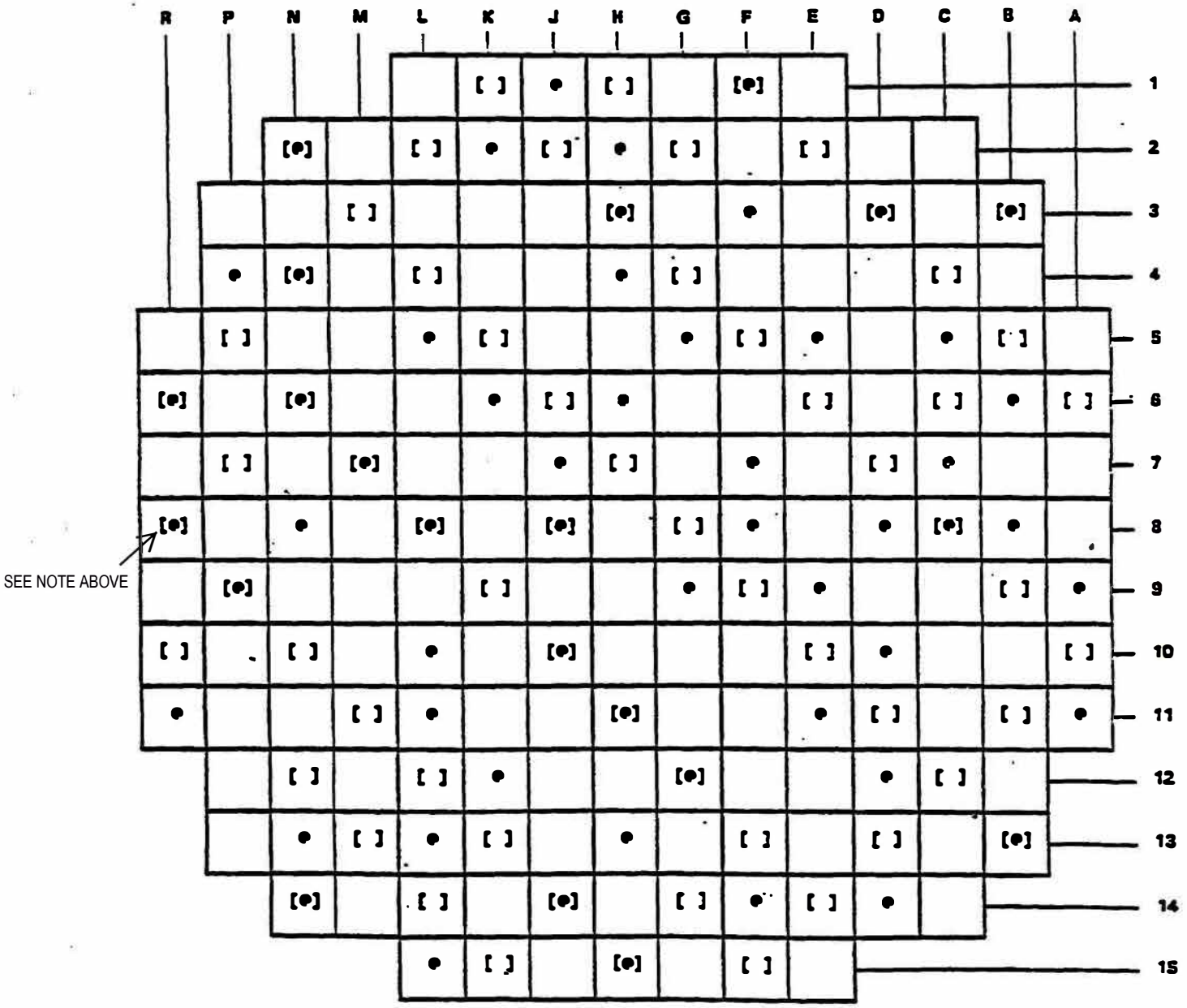

[ ] THERMOCOUPLE (U1 - 64; U2 - 65)

● MOVABLE DETECTOR (58)
(NO FLOW MIXING DEVICES)

Figure 4.4.5-1 Distribution of In-Core Instrumentation

4.5 REACTOR (HTP AND MARK-BW FUEL)

4.5.1 SUMMARY DESCRIPTION

Beginning in Cycle 9, both units were reloaded with Mark-BW fuel supplied by Framtome. Approximately two thirds of the Cycle 9 core was Westinghouse Vantage 5H fuel, with additional Mark-BW fuel being added with each successive fuel load. The current licensing basis in Chapters 4 and 15 of the FSAR is the analysis that was done by Westinghouse for Westinghouse fuel. Beginning with Cycle 19 for Unit 2 and Cycle 20 for Unit 1, each unit will be loaded with Advanced W17 HTP fuel supplied by AREVA NP, Inc. Approximately two thirds of each core was Mark-BW fuel with additional Advanced W17 HTP fuel being added with each successive fuel load.

This section provides the description of the Mark-BW and Advanced W17 HTP fuel designs and the methods, models, and analysis that AREVA NP Inc. uses to design the fuel and the fuel cycle. The portions of this section that are provided are numbered to correspond to portions of the current Section 4. The No. 5 has been inserted into the numbering sequence to distinguish the two. For example, 4.3.2.1 will appear as 4.5.3.2.1 in this new section. Where practical, the same system is followed in the numbering of tables and figures.

The Mark-BW fuel assembly is a 17x17, standard lattice fuel assembly design for use in Westinghouse-designed reactors. The Mark-BW fuel assembly consists of 264 fuel rods, 24 guide thimbles, and one instrument sheath in a 17x17 square array. The guide thimbles are annealed Zircaloy-4 or alloy M5 and provide guidance for control rod insertion. The fuel assembly contains 8 spacer grid assemblies, which consist of 6 Zircaloy-4 intermediate spacer grids, and 2 Inconel-718 end grids. The bottom nozzle is a proven debris resistant design. A detailed description of the Mark-BW fuel assembly may be found in the topical report BAW-10172P, “Mark-BW Mechanical Design Report,” (Reference 1).

The Advanced W17 HTP fuel assembly is a 17x17, standard lattice fuel assembly design for use in Westinghouse-designed reactors. The Advanced W17 HTP fuel assembly consists of 264 fuel rods, 24 guide tubes and one instrument tube in a 17x17 square array. The guide tubes are annealed Zircaloy-4 and provide guidance for control rod insertion. The fuel assembly contains 7 Zircaloy-4 spacer grid assemblies including the uppermost grid and 1 nickel alloy 718 lowermost spacer grid assembly. The Advanced W17 HTP fuel assembly also includes 3 Zircaloy-4 intermediate flow mixing spacer grid assemblies. The bottom nozzle is a proven debris resistant design. A detailed description of the Advanced W17 HTP assembly may be found in Reference 5.

The basic design parameters of the Mark-BW and Advanced W17 HTP fuel assemblies are comparable to those of the Westinghouse Standard and Vantage 5H 17x17 fuel assemblies. The Mark-BW and Advanced W17 HTP fuel assemblies incorporate proven AREVA NP Inc. design features while maintaining compatibility with the Westinghouse reactor internals and with resident fuel assemblies. Compatibility of the Mark-BW fuel with the Sequoyah plant and its resident fuel is discussed in detail in topical report BAW-10220P, A Mark-BW Fuel Assembly Application for Sequoyah Units 1 and 2 (Reference 2). Compatibility of the Advanced W17 HTP fuel assembly with Sequoyah plant and its resident fuel is discussed in Reference 6.

The analysis techniques employed in the core design are tabulated in Table 4.5.1-2. The reactor coolant system design transient group core power history and fatigue cycles are summarized in Tables 4.5.2-2 and 4.5.2-3. The thermal and hydraulic reactor design parameters with the Mark-BW and Advanced W17 HTP fuel assemblies are shown in Table 4.5.4.2-1. The specific or limiting loads

considered for design purposes for the fuel assembly structure are given in Subparagraph 4.5.2.1.1.2. The design evaluation for the fuel rods is given in Subparagraph 4.5.2.1.3.1 and the fuel assembly structure stresses and deflection evaluation is presented in Subparagraph 4.5.2.1.3.2.

Beginning with the Unit 2 Cycle 13 reload core, the design basis thermal-hydraulic analysis was revised to reflect removal of the fuel assembly thimble plugs (Reference 4). Use of thimble plugs in subsequent core designs shall be evaluated as part of the reload safety analysis.

4.5.1.1 REFERENCES

1. BAW-10172P-A, Mark-BW Mechanical Design Report, Babcock & Wilcox, Lynchburg, Virginia, December 1989.

2. BAW-10220P, Mark-BW Fuel Assembly Application for Sequoyah Nuclear Units 1 and 2, March 1996.

3. BAW-2396, Sequoyah Nuclear Plant M5 Design Report, May 2001.

4. AREVA Document 51-5027609-00, SQNP Thimble Plug Removal Assessment Summary, May 2003 RIMS # B88031027802.

5. AREVA Document ANP-2986(P)-03, Sequoyah HTP Fuel Transition (P).

6. AREVA Document 32-9181021-000, Advanced W17 HTP Fuel Assembly Interface Evaluation.

4.5.2 MECHANICAL DESIGN

4.5.2.1 FUEL

4.5.2.1.1 Design Basis

4.5.2.1.1.1 Fuel Rods

Cladding Material Properties

Cold worked and stress relieved zirconium alloy grade R60804 (Zircaloy-4) or 1% niobium (Alloy M5) is used for fuel rod cladding (Reference 1) and fuel rod end plugs (Reference 2) due to its low neutron absorption characteristics.

Cladding Stress Limits

The fuel rod stress limits are based on criteria using as guidelines the ASME Boiler and Pressure Vessel Code (Reference 3). Stress level intensities are calculated in accordance with the ASME Code and Reference 21, which includes both normal and shear stress effects. These stress intensities are compared to S_m, the allowable stress level. Worst case or 2s tolerance dimensions are used in all cases except where noted and justified. For zirconium alloy fuel rod components, S_m equals two-thirds of the minimum specified unirradiated yield strength of the material at the operating temperature (650°F). Stress intensity calculations combine the stresses so that the stress intensity is maximized.

Pressure and temperature inputs to the stress intensity analyses are chosen so that the operating conditions for normal operation (Condition I) and all Condition II transients are enveloped.

The effects of cladding corrosion and fretting wear are considered when evaluating cladding stress.

Cladding Stress Intensities meet the following limits for Condition I & II events in general. Limits for M5 cladding are contained in Reference 21 and are considered proprietary to AREVA.

$$P_m \leq S_m$$
$$P_l \leq 1.5\ S_m$$
$$P_m + P_b \leq 1.5\ S_m$$
$$P_m + P_b + Q \leq 3.0\ S_m$$

Where:

P_m = General Primary Membrane Stress Intensity
P_l = Local Primary Membrane Stress Intensity
P_b = Primary Bending Stress Intensity
Q = Secondary Stress Intensity

Cladding Transient Strain

The uniform transient strain (elastic and inelastic) shall not exceed 1 percent. The transient strain is determined using the computer code COPERNIC (Reference 27) for fuel rods in transition or full cores containing Advanced W17 HTP assemblies (starting with Unit 2 Cycle 19 and Unit 1 Cycle 20). Fuel rods in cores containing all Mark-BW assemblies (up to and including Unit 2 Cycle 18 and Unit 1 Cycle 19) are analyzed with the TACO3 (Reference 4) and GDTACO (Reference 19) codes. Transient strain is defined as transient-induced cladding deformation with gage lengths corresponding to the cladding dimensions. The transient strain is calculated from the change in diameter of the pellet during the maximum power transient.

Cladding Strain Fatigue

The total fatigue usage factor for the clad is determined for all appropriate transients listed in the UFSAR in a manner consistent with References 21 and 24. The total fatigue usage factor does not exceed 0.9 as defined in References 21 and 24. The fatigue curve from Reference 5 shall be used.

Fuel Material

The fuel pellet density shall be 96% theoretical density (TD).

4.5.2.1.1.2 Fuel Assembly Structure

Design analyses are performed using standard Framatome codes licensed for use with the NRC. Stress analyses follow the general format and procedures outlined in Section III, Subsection NG, of the ASME Boiler and Pressure Vessel Code (Reference 3). Although Section III is not directly applicable to fuel rod analysis, it is used as a guide in classifying the stresses into various categories, assigning appropriate limits on criteria to these categories, and combining the stresses to determine the stress intensity.

Allowable stress levels for the hold-down springs are based on experience within the nuclear industry with the spring material.

Bolts are analyzed following the ASME Code guidelines for threaded structural fasteners.

Type A Components - Stress/Strain Limits

The Stress intensity limits for the Type A components (components fabricated from ASME Code recognized materials) are tabulated in the ASME Boiler and Pressure Vessel Code, Section III.

Type B Components - Stress/Strain Limits

Stress intensity limits for Type B components (components fabricated from non-ASME Code materials) are developed based on the guidelines of the ASME Code. The S_m used to determine the allowable stress, and other material properties from these materials are determined from sources other than the ASME Code. Irradiation induced changes in the material properties are considered in determining the allowable stress levels for design verification. For example, zirconium alloy material allowable, S_m, is 2/3 the unirradiated yield strength. Worst case or 2σ tolerance dimensions are used in all cases except where noted and justified.

Spacer Grids

The Mark-BW end and intermediate spacer grids position the fuel rods to be mutually parallel on the proper square pitch spacing, position the guide thimbles in the proper pattern, and provide lateral support to the fuel rods, guide thimbles, and instrument sheath.

Intermediate Spacer Grid Material Properties

Zircaloy-4 is used due to its low neutron capture characteristics. The material ductility is adequate to prevent localized failures due to forming. The effect on the mechanical properties by temperature, irradiation, and corrosion are accounted for in the design evaluation. The dynamic properties are determined by testing and used to benchmark analytical fuel assembly models.

End Grid Material Properties

Inconel 718 is used due to its corrosion resistance and high strength at elevated temperature. The material is solution annealed and mill processed to eliminate predominant secondary phases in the microstructure and grain boundaries. The lateral stiffness and dynamic properties are tested and used to benchmark analytical fuel assembly models.

Vibration and Fatigue

The spacer grids provide adequate support to maintain the fuel rods in a coolable geometry for all operating conditions. The grids also provide lateral and rotational restraint for the fuel rods. Contact surfaces for the fuel rods maintain acceptable cladding wear depths throughout the life of the fuel assembly. Fuel rod wear performance is established based on design verification testing and/or operating experience with similar designs.

Chemical Compatibility

For the Zircaloy-4 intermediate spacer grids, material corrosion resistance is established based on testing in steam at 750°F and 1500 psi. All samples tested exhibit a continuous black, lustrous oxide film. The end spacer grids of Inconel 718 are very resistant to corrosion by the coolant under reactor conditions. Experience has shown that the hard protective oxide film that forms retards corrosion.

Guide Thimble Wear

Guide thimble wear is considered in the structural analyses of the fuel assembly. Wear characteristics are based on operation experience (post irradiation examinations), design verification testing, and/or similarities with existing designs (in order of preference).

The criteria for allowable guide thimble wear are determined based on structural analyses of the guide thimbles that account for tube wall thinning due to wear.

Corrosion Allowance

Material thinning due to corrosion is considered in the structural analyses as applicable. The corrosion allowance(s) are established based on operating experience.

Fatigue Analyses

The total fatigue usage factor for all Condition I and II Events plus one Condition III Event does not exceed 0.9 for the fuel rod assembly and 1.0 for all other fuel assembly components. Fatigue analyses are plant specific based on the transients given in Table 5.2.1-1. The fuel assembly permits the reactor to perform daily load follow.

Normal Operation

Structural integrity is verified for the fuel assembly and its components subjected to loading associated with normal operation and upset events (and emergency condition transients, if applicable).

LOCA/Seismic

Structural integrity is verified for the fuel assembly and its components subjected to loading associated with LOCA, Seismic (both OBE and SSE), and combined LOCA and Seismic events. Rod Cluster Control Assembly insertion requirements are presented below. A coolable geometry is maintained at all times:

(1) During all normal operation (Condition I).
(2) During all Condition II and III events.
(3) During a small LOCA ($\leq$ 0.5 ft^2) and following an OBE (Operating Base Earthquake)
(4) Following a SSE (Safe Shutdown Earthquake)

Handling and Shipping

The structural integrity shall be verified for the fuel assembly and its components subjected to loading associated with handling and shipping operations.

Fuel Handling Loads

Handling equipment setpoints limit the loads imposed on the fuel assembly. Handling procedures ensure that the actual accelerations are less than the design loads allowable.

Shipping Loads

The evaluation of the fuel assembly components for loads imposed on the fuel assembly during shipment addresses the following quasi static loadings:

Lateral:	6.0 G's load factor
Axial:	4.0 G's load factor

Fuel Assembly Bow

The fuel assembly is free standing as fabricated, and its bow and tilt are sufficiently small for ease of handling and to minimize fuel assembly bow during operation.

Fuel Assembly Growth Allowance

The fuel assembly to reactor internals gap allowance for differential growth and thermal expansion is designed to ensure that a positive clearance is maintained during the assembly life.

4.5.2.1.2 Design Description

Mark-BW Fuel Assembly

The Mark-BW fuel assembly shown in Figure 4.5.2-1, is a 17x17, standard lattice, Zircaloy-4 intermediate spacer grid fuel assembly designed for use in Westinghouse-designed reactors. The fuel assembly incorporates many standard Framatome design features while maintaining compatibility with the Westinghouse reactor internals and resident fuel assemblies. The nozzles and spacer grid designs are proven Framatome designs currently in operation in Westinghouse-designed reactor vessels. The guide thimble top section and dashpot diameters, the instrument sheath diameter, and the fuel rod outside diameter are compatible with the standard and Vantage 5H 17x17 Westinghouse designs. The fuel rod design has been developed based on standard Framatome methods applied to the Westinghouse outside cladding diameter. The features of the Mark-BW fuel assembly design include the Zircaloy-4 intermediate spacer grid, the intermediate spacer grid restraint system, reconstitutable top nozzle, and fuel rod plenum springs on both ends of the fuel stack.

The Mark-BW fuel assembly consists of 264 fuel rods, 24 guide thimbles, and one instrument sheath in a 17x17 square array. The annealed zirconium alloy guide thimbles provide guidance for control rod insertion and are attached to nozzles and Inconel end spacer grids at the top and bottom of the fuel assembly to form the structural skeleton. A reduced diameter section at the bottom of the guide thimbles acts as a dashpot and decelerates the control rod assembly during

trips. The annealed zirconium alloy instrument sheath occupies the center lattice position and provides guidance and protection for the incore instrumentation assemblies. The fuel rod and guide thimble spacing is maintained along the length of the assembly by five vaned and one vaneless Zircaloy-4 intermediate spacer grids.

The Low Pressure Drop (LPD) Mark-BW is a design variant of the Mark-BW that incorporates an improved top nozzle (see Figure 4.5.2-1 and Figure 4.5.2-7B) and an improved bottom nozzle (see Figure 4.5.2-5B). The LPD nozzles enhance the performance of the current Mark-BW fuel assemblies, while maintaining proper structural characteristics. These nozzles provide improved debris filtering capabilities and decrease the pressure drop across the fuel assembly.

Advanced W17 HTP Fuel Assembly

The Advanced W17 HTP fuel assembly shown in Figure 4.5.2-16, is a 17x17, standard lattice, Zircaloy-4 intermediate spacer grid fuel assembly designed for use in Westinghouse-designed reactors. The fuel assembly incorporates many standard AREVA design features while maintaining compatibility with the Westinghouse reactor internals and resident fuel assemblies. The nozzles and spacer grid designs are proven AREVA designs currently in operation in Westinghouse-designed reactor vessels. The guide tube top section and dashpot diameters, the instrument tube diameter, and the fuel rod outside diameter are compatible with the Mk-BW fuel assembly. The fuel rod design has been developed based on standard AREVA methods applied to the Westinghouse outside cladding diameter. The features of the Advanced W17 HTP fuel assembly design include the Zircaloy-4 intermediate HTP spacer grid, the nickel alloy 718 HMP lower most spacer grid, a welded cage structure system, reconstitutable top nozzle, debris resistant bottom nozzle and fuel rod plenum springs on both ends of the fuel stack.

The Advanced W17 HTP fuel assembly consists of 264 fuel rods, 24 guide tubes and one instrument tube in a 17x17 square array. The annealed zirconium alloy guide tubes provide guidance for control rod insertion and are attached to the nozzles and all end and intermediate spacer grids to form the structural cage assembly. The outside diameter of the guide tubes is constant along the entire length of the guide tube assembly with a reduced inside diameter section at the bottom of the guide tubes which acts as a dashpot and decelerates the control rod assembly during trips. The annealed zirconium alloy instrument tube occupies the center lattice position and provides guidance and protection for the incore instrumentation assemblies. The fuel rod and guide tube spacing is maintained along the length of the assembly by six HTP Zircaloy-4 intermediate spacer grids.

4.5.2.1.2.1 Fuel Rods

The two types of Mark-BW and Advanced W17 HTP fuel rods are UO_2 and the UO_2-Gd_2O_3 rod designs. The UO_2 design consists of sintered low enriched UO_2 pellets, and may be blanketed by lower enriched UO_2 pellets at both ends, contained in a zirconium alloy seamless tube with end caps welded at each end. The UO_2-Gd_2O_3 design is very similar, but its central pellet section consists of UO_2-Gd_2O_3 pellets. The small amount of gadolinia present acts as a poison, and its inclusion in some of the fuel rods in a fuel assembly allows a better power distribution within that fuel assembly. There is a small diametral clearance between the cladding inside the diameter and the outside diameter of the fuel pellets. The tube is sealed at both ends by welding zirconium alloy end caps to the cladding (Figures 4.5.2-3 and 4.5.2-18). A series of springs at both end (Figures 4.5.2-4 and 4.5.2-19) position the fuel stack within the cladding and provide protection against axial gap formation during shipping, handling, and irradiation. The fuel rod is evacuated and then backfilled with helium of high purity at high pressure prior to upper end cap welding. The high purity helium assures good heat transfer across the pellet-cladding gap. In addition, the high pressure fill gas prevents creep collapse of the fuel rod during the expected incore operation of the fuel rod. A schematic of the UO_2 fuel rod design is shown in Figures 4.5.2-2 and 4.5.2-17.

The fuel pellets are cylindrical in shape with a spherical dish at each end. The ends of the pellets are chamfered and include an outward land taper. The configuration on the pellet ends reduce hourglassing of the fuel pellet at power. The diameter of the fuel pellet is controlled within very tight limits. The density of the pellets is 96% TD.

The purpose of the fuel rod spring system is to prevent axial gaps from forming in the fuel column. Thermal and irradiation induced changes in the fuel stack length can cause gaps to form in the fuel stack. Axial acceleration of the fuel stack during shipping and handling can also produce gaps in the fuel stack. Axial gaps in the fuel stack cause power peaks in adjacent fuel rods, and allow for creep ovalization into the gap.

4.5.2.1.2.1.1 Blended Uranium Assemblies

Four lead test assemblies (LTAs) utilizing reprocessed uranium were fabricated to demonstrate the feasibility of using reprocessed uranium fuel in commercial nuclear power plants. These LTAs consist of standard Mark-BW fuel assemblies which contain UO_2 fuel pellets obtained by blending reprocessed highly enriched uranium with natural uranium. The LTAs do not contain axial blankets.

The LTA UO_2 fuel pellets contain concentrations of the minor uranium isotopes (^{232}U, ^{234}U, and ^{236}U), which are higher than typically found in UO_2 fuel. These isotopic differences only affect the nuclear properties and have no effect on the chemical, mechanical or thermal properties of the fuel pellets. The increased concentrations of ^{234}U and ^{236}U act as a fixed neutron poison and require that the concentration of ^{235}U be increased to have comparable reactivity with standard UO_2 fuel pellets.

Further design details and the impact of the mechanical, nuclear, thermal, thermal-hydraulic, and safety analyses of the LTAs are given in Reference 20.

Batch implementation of fuel assemblies containing reprocessed uranium commenced with Unit 2 Cycle 16. Design details related to the impact of batch implementation of reprocessed uranium on mechanical, nuclear, thermal, thermal-hydraulic, and safety analyses are described in Reference 26.

4.5.2.1.2.1.2 ALLIANCE Fuel Assemblies

Four Lead Test Assemblies (LTAs) were fabricated using standard Mark-BW fuel rods clad in M5 material to demonstrate the feasibility of using the new structural material and design features of ALLICANCE-type fuel assemblies in U.S. commercial nuclear power plants. M5 is a Framatome developed alloy composed of approximately 99 percent zirconium and 1 percent niobium. It was designed for high fuel rod burnup conditions and has shown to exhibit superior corrosion resistance and reduced irradiation-induced growth as compared to zircaloy-4. The M5 material was reviewed in Reference 21.

The ALLIANCE fuel assemblies are designed to be complete fit-and-function replacements for standard Mark-BW fuel assemblies that incorporate material and design changes to improve performance. The major differences are use of the new M5 alloy replacing zircaloy-4 structural parts and design modifications to the fuel rod end plugs to permit fuel rod pulling. These changes permit higher fuel burn-up with improved thermal-hydraulic and mechanical performance (i.e., reduced flow resistance pressure drops, greater geometric stability) of the fuel assemblies compared with standard Mark-BW assemblies.

Other differences include redesign of the spacer grids and guide tubes. ALLIANCE design details and the impact of the mechanical, nuclear, thermal, thermal-hydraulic, and safety analyses of the ALLIANCE LTAs were reviewed in Reference 22. These LTAs may be utilized on both units.

4.5.2.1.2.1.3 Advanced Mark-BW(A) Lead Use Assemblies

Four Lead Use Assemblies (LUAs) were fabricated to demonstrate the feasibility of the new structural material and design features of Advanced Mark-BW(A)-type fuel assemblies in U.S. commercial nuclear power plants. These changes are primarily intended to reduce fuel assembly bow and twist, and to improve mechanical integrity.

The Advanced Mark-BW(A) fuel assemblies are designed to be complete fit-and-function replacements for standard Mark-BW fuel assemblies that incorporate material and design changes to improve performance. The major differences are a welded cage with M5 MONOBLOC guide tubes and M5 Mark-BW structural mixing vane grids, HMP alloy 718 upper and lower end grids, a removable upper end fitting with a quarter-turn quick disconnect feature, and a FUELGUARD lower end fitting. The Sequoyah Advanced Mark-BW(A) will utilize a slightly longer fuel rod and a slightly higher uranium loading than the standard Mark-BW assemblies. Advanced Mark-BW(A) design details and the impact of the Advanced Mark-BW(A) LUAs on the mechanical, nuclear, thermal-hydraulic, and safety analyses were reviewed in Reference 25. All methodologies used to analyze the LUAs are NRC approved.

4.5.2.1.2.1.4 Reconstituted Fuel Assemblies

Fuel assemblies under irradiation in the reactor core may contain fuel rods that are not suitable for operation in planned subsequent fuel cycles. Fuel rods that develop those conditions may be replaced with non-heat producing zirconium alloy or stainless steel replacement rods in limited quantities, thus allowing the reconstituted fuel assemblies to continue to be utilized in subsequent fuel cycles. Fuel assemblies are allowed to be reconstituted with a maximum of ten replacement rods.

The replacement rods are designed and analyzed to ensure that no adverse impact on fuel assembly or core performance results from their use. The rod dimensions are set so that:

1. The replacement rod engages all spacer grid stops under all conditions.

2. Clearance is maintained between the replacement rod and the top grillage under reactor temperature and irradiation conditions.

The conditions that control the design are:

1. The difference is thermal expansion between the replacement rods and fuel rods in the radial direction shall not cause permanent deformation of the spacer grid spring stops and allow excessive strains of the grid cells.

2. The difference in mass between the replacement rods and the fuel rods shall not affect fuel assembly lift.

The presence of one or more non-heated replacement rods may cause a small flow redistribution within their respective fuel assembly array, and power peaking may be redistributed. Generic impacts of these effects on the fuel mechanical, nuclear, thermal-hydraulic, and safety analyses were analyzed in Reference 23. Each as-reconstituted fuel assembly is evaluated on a cycle-specific basis using the requirements specified in Reference 23 to ensure that its use is acceptable for its next cycle of residence in the core.

Replacement rods as described in this section may be utilized in fuel assemblies for both Sequoyah units.

4.5.2.1.2.2 Fuel Assembly Structure - Mark-BW Assembly

The fuel assembly structure consists of a bottom nozzle, top nozzle, guide and instrument thimbles, and grid assemblies. Each of these components is described in detail in the following paragraphs.

Bottom Nozzle

The bottom nozzle is either a flat stainless steel plate or grillage with legs welded to each corner as shown in Figure 4.5.2-5A or, in the Low Pressure Drop Mark-BW, a stainless steel structure supporting a high strength mesh plate filter as shown in Figure 4.5.2-5B. The bottom nozzle engages with the guide pins in diagonally opposing corners and rests directly on the lower core plate to support the weight of the fuel assembly plus the hold-down spring forces. The fuel rods are seated on the top surface of the bottom nozzle.

The flow holes in the nozzle are sized to filter out debris that could be captured between the nozzle and the lower end spacer grid. Debris captured in the spacer grid area has been known to cause damaging wear to the fuel rods. Hydraulic flow tests have been conducted on the bottom nozzle to verify that the effects on fuel assembly pressure drop are acceptable. The bottom nozzle is attached to the guide thimbles by a simple bolted connection illustrated in Figure 4.5.2-6. The bottom end plug of the guide thimble is internally threaded. The bottom end plug rests on the nozzle. The guide thimble bolt is inserted through a hole in the nozzle and engages the threads of the bottom end plug. The bolt head is tack welded to the underside of the nozzle. A stepped diameter hole through the shank and head of the bolt is provided to vent the bottom portion of the guide thimble.

Top Nozzle

The top nozzle assembly is a box-like structure of welded stainless steel plates as shown in Figure 4.5.2-7A and for the Low Pressure Drop Mark-BW in Figure 4.5.2-7B. The grillage of the nozzle consists of a plate with a machined hole pattern for attaching the guide thimbles and providing flow area for the reactor coolant exiting the fuel assembly. The top surface of the grillage provides the interface for fixed core components such as thimble plug assemblies and burnable poison rod assemblies.

The top plate of the top nozzle assembly provides the handling and reactor internals interface surfaces and supports four sets of three-leaf Inconel holddown springs. Two guide pins on the upper core plate engage with two holes in diagonally opposing corners of the nozzle to position the assembly during operation. The holddown springs are attached to the nozzle by clamp bolts. A tang extending from the main (top) leaf of the holddown springs is captured through a slot in the top plate to preload the spring and to capture the spring parts in the unlikely event of a spring fracture.

The top nozzle assembly is removable to allow for the replacement of fuel rods in the field. A ring nut and locking cup arrangement is used to attach the nozzle to the threaded collars at the top ends of the guide thimbles as shown in Figure 4.5.2-8A and Figure 4.5.2-8B.

The nuts may be removed and replaced in the field with a special tool.

Guide and Instrument Thimbles

The guide thimbles are structural members which also provide channels for the control rods, burnable poison rods, neutron source, or thimble plug assemblies. Each thimble is fabricated from zirconium alloy tubing having two different diameters. The tube diameter at the top section provides the annular area necessary for rapid control rod insertion during a reactor trip. The tube diameter at the bottom section provides a dashpot effect near the end of the control rod travel during normal reactor trip operation. Holes are located above the dashpot region to reduce control rod drop times. A stepped diameter hole through the guide thimble bolt is provided to vent the dashpot region of the guide thimble.

Grid Assemblies

End Spacer Grids

The end spacer grids of the Mark-BW fuel assembly are similar to the end spacer grids of the other Framatome fuel assembly designs. The grids are fabricated from Inconel-718 strips which are slotted at the top or bottom for assembly in an "egg crate" fashion. The strips are TIG welded at the top and bottom of the strip intersections to form an assembly. Punched projections on the strips form stops to support the fuel rods and saddles to support the guide thimbles and instrument tube. Each fuel rod cell contains two perpendicular sets of stops and each set consists of two hardstops near the edges of the strip opposed by one softstop at the center of the strip as shown in Figure 4.5.2-9. Keying windows are provided for the insertion of rectangular keys which open the cells (softstops) for scratch free and stress free insertion of the fuel rods during fuel bundle assembly.

The top and bottom end grid restraint designs are illustrated in Figures 4.5.2-10 and 4.5.2-11, respectively. Tabs are employed at the guide thimble locations on the top of the top end grid strips and on the bottom of the bottom end grid strips for the attachment of short 304L stainless steel sleeves. These sleeves are resistance welded to the tabs during the spacer grid assembly process. The top end grid sleeves are seated against the guide thimble collars to restrain the grid from upward motion and to transmit axial compression loads from the top nozzle to the fuel rods. The bottom end grid sleeves are crimped into circular grooves in the guide thimble bottom end plugs to restrain the grid in both axial directions.

Intermediate Spacer Grids

The grids are fabricated from Zircaloy-4 strips which are slotted at the top or bottom for assembly in an "egg crate" fashion. The strips are welded at the top and bottom at the strip intersections to form a grid assembly. Fuel rod, guide thimble and instrument tube supports are of the standard Framatome design previously described for the end

spacer grids. The standard Framatome keyable features are maintained for the Zircaloy-4 intermediate spacer grids allowing for scratch free and stress free fuel rod insertion during fuel bundle assembly. The generous lead in features and an improved corner have been created to facilitate ease of fuel assembly handling.

The five upper intermediate spacer grid assemblies employ flow mixing vanes on the downstream edges (top). The mixing vanes are small tabs bent approximately 30° to the flow direction. The purpose of the mixing vanes is to improve the thermal performance of the fuel assembly by enhancing the coolant turbulence. The mixing vane design and pattern has been verified by CHF testing and is based on proven mixing vane designs of NFI in use in Japan. Mixing vanes are not used on the lowest intermediate spacer grid since the thermal enhancement is not needed in this cooler region of the fuel assembly.

As in all Framatome fuel assembly designs, the Mark-BW intermediate spacer grids are not attached to the guide thimbles, and the grids are free to follow the fuel rods early in life as they grow due to irradiation. This feature virtually eliminates axial friction forces suspected of contributing to fuel rod bow. Gross spacer grid movement is limited by stops incorporated on the instrument tube and selected guide thimbles shown in schematic form on Figure 4.5.2-12.

The Mark-BW intermediate spacer grid restraint system allows for floating grid assemblies. The intermediate spacer grids are allowed to follow the fuel rods as they grow due to irradiation until burnup effects have significantly relaxed the Zircaloy-4 spacer grids. At this burnup level, the intermediate spacer grids contact rigid stops to prevent further axial movement. The stops are short sleeves or ferrules dimpled to eight guide thimbles above each intermediate spacer grid and to the instrument sheath below each intermediate grid. The flow mixing vanes are removed from the walls of the eight guide thimbles and instrument tube cells which interface with the ferrules. This spacer grid restraint system employs these eight guide thimbles as restraining members. The locations of the eight restraining guide thimbles are shown in Figure 4.5.2-13. There is also one ferrule attached to the instrument sheath below the top end spacer grid and below each intermediate spacer grid to prevent downward motion during shipping and handling.

4.5.2.1.2.3 Fuel Assembly Structure - Advanced W17 HTP Fuel Assembly

The fuel assembly structure consists of a bottom nozzle, top nozzle, welded cage assembly that consists of guide and instrument tubes, and grid assemblies. Each of these components is described in detail in the following paragraphs.

Bottom Nozzle Assembly

The bottom nozzle is a stainless steel structure supporting a set of blades as shown in Figure 4.5.2-20. The bottom nozzle engages with the lower core plate guide pins in diagonally opposing corners and rests directly on the lower core plate to support the weight of the fuel assembly plus the hold-down spring forces. The fuel rods are slightly elevated from the top surface of the bottom nozzle.

The blades are positioned to filter out debris that could be captured between the nozzle and the lower end spacer grid. Debris captured in the spacer grid area has been known to cause damaging wear to the fuel rods. Hydraulic flow tests have been conducted on the bottom nozzle to verify that the effects on fuel assembly pressure drop are acceptable. The bottom nozzle is attached to the guide tubes by a simple bolted connection illustrated in Figure 4.5.2-21. The guide tube lower end fitting of the guide tube is internally threaded. The guide tube lower end fitting rests on the nozzle. The guide tube capture screw is inserted through a hole in the nozzle and engages the threads of the bottom end plug. The bolt head is crimped to the bottom nozzle. A stepped diameter hole through the shank and head of the bolt is provided to vent the bottom portion of the guide tube assembly.

Top Nozzle Assembly

The top nozzle assembly is a box-like structure of welded stainless steel plates as shown in Figure 4.5.2-22. The grillage of the top nozzle assembly consists of a plate with a machined hole pattern for attaching the guide tubes and providing flow area for the reactor coolant exiting the fuel assembly. The top surface of the grillage provides the interface for fixed core components such as thimble plug assemblies and burnable poison rod assemblies.

The top plate of the top nozzle assembly provides the handling and reactor internals interface surfaces and supports four sets of three-leaf nickel alloy 718 holddown springs. Two guide pins on the upper core plate engage with two holes in diagonally opposing corners of the nozzle to position the assembly during operation. The holddown springs are attached to the nozzle by clamp bolts. A tang extending from the main (top) leaf of the holddown springs is captured through a slot in the top plate to preload the spring and to capture the spring parts in the unlikely event of a spring fracture.

The top nozzle assembly is removable to allow for the replacement of fuel rods in the field. A ¼ turn quick disconnect is used to attach the nozzle to the top ends of the guide tubes as shwon in Figure 4.5.2-23. There are no loose parts with this design.

Cage Assembly

The welded cage assembly is shown in Figure 4.5.2-27. The individual HTP and IFM spacer grids are welded to the guide tubes at each elevation. The HMP spacer grid is held in place by small zirconium alloy rings called spacer capture rings above and below the HMP. The instrument tube is held in place with spacer capture rings and a counter bore in the top nozzle assembly.

Guide and Instrument Tubes

The guide tubes are structural members which also provide channels for the control rods, burnable poison rods, neutron source, or thimble plug assemblies. Each tube is fabricated from zirconium alloy tubing having two different inside diameters and a constant outside diameter (Monobloc). The tube diameter at the top section provides the annular area necessary for rapid control rod insertion during a reactor trip. The tube inside diameter at the bottom section provides a dashpot effect near the end of the control rod travel during normal reactor trip operation. Holes are located above the dashpot region to reduce control rod drop times. A stepped diameter hole through the guide tube cap screw is provided to vent the dashpot region of the guide tube.

Grid Assemblies

End Spacer Grids

The end spacer grids of the Advanced W17 HTP fuel assembly are similar to the end spacer grids of other AREVA NP Inc. HTP fuel assembly designs. The lower most HMP grid is fabricated from nickel alloy 718 strips and the upper most HTP grid is fabricated from Zircaloy-4 strips. The strips are formed as a singlet and welded together to form a doublet. The grid is assembled by loading the doublets which are slotted at the top or bottom for assembly in an “egg crate” fashion. The strips are laser welded at the top and bottom of the strip intersections to form an assembly. Formed projections on the strips form contact areas to support the fuel rods and to support the guide tubes and instrument tube. Each fuel rod cell contains four pairs of contact areas as shown in Figure 4.5.2-24. The HMP spacer is shown in Figure 4.5.2-25.

Intermediate Spacer Grids

The intermediate grids are fabricated from Zircaloy-4 strips which are slotted at the top or bottom for assembly in an “egg crate” fashion. The strips are welded at the top and bottom at the strip intersections to form a grid assembly. Fuel rod, guide tube and instrument tube supports are of the standard AREVA NP Inc. HTP design previously described for end spacer grids. The generous lead-in features and an improved corner have been created to facilitate ease of fuel assembly handling. The six intermediate spacer grid assemblies employ the curved flow channels on the downstream edges (top) (see Figure 4.5.2-24).

Intermediate Flow Mixing Spacers

The Advanced W17 HTP fuel assembly includes intermediate flow mixing (IFMs) (See Figure 4.5.2-26). These spacers are placed in the spans between HTP spacers to improve thermal-hydraulic performance.

4.5.2.1.3 Design Evaluation

4.5.2.1.3.1 Fuel Rods

Fuel Rod Vibration Analysis

Extensive out-of-core testing has demonstrated that flow-induced vibration of the fuel rod cladding causes neither fretting wear nor fatigue damage for PWR operating conditions. Further discussion of fretting wear can be found in ensuing discussions.

Fuel Rod Stress Evaluation

The fuel rod cladding is analyzed for the stresses induced during operation. The ASME pressure vessel stress intensity limits are used as guidelines. Conservative values are used for cladding thickness, oxide layer buildup, external pressure, internal fuel rod pressure, differential temperature, and unirradiated cladding yield strength. The maximum cladding stress intensities are within limits under all Condition I and II events.

Pellet-cladding interaction (PCI) and creep collapse-induced stresses are not of concern as small deformations of the cladding will relieve those stresses. Limits are based on ASME criteria and Reference 21. Stress level intensities are calculated in accordance with the ASME Code, which includes both normal and shear stress effects. These stress intensities are compared to S_m. S_m is equal to 2/3 of the minimum specified unirradiated yield strength of the material at the operating temperature. In general, the limits are as follows. Limits for M5 cladding are contained in Reference 21 and are considered proprietary to AREVA.

I. Primary general membrane stress intensities (P_m) must not exceed S_m.

II. Local primary membrane stress intensities (P_l) must not exceed 1.5 * S_m. These include the contact stresses from spacer grid-fuel rod contact.

    Primary membrane + Bending stress intensities ($P_l + P_b$) must not exceed 1.5 * S_m.

III. Primary membrane + Bending + Secondary stress intensities (P_l+P_b+Q) must not exceed 3.0 * S_m.

Stress intensity calculations combine the stresses so that the stress intensity is maximized. Pressure and temperature inputs to the stress intensity analyses are chosen so that the operating conditions for all Condition II transients are enveloped.

The type of stresses which are analyzed are as follows:

1. Pressure Stresses - These are membrane stresses due to the external and internal pressure on the fuel rod cladding.

2. Flow Induced Vibration - These are longitudinal bending stresses due to vibration of the fuel rod. The vibration is caused by coolant flow around the fuel rod.

3. Ovality - These are bending stresses due to external and internal pressure on the fuel rod cladding that is oval. This does not include the stresses resulting from creep ovalization into an axial gap.

4. Thermal Stresses - These are secondary stresses that arise from the temperature gradient across the fuel rod during reactor operation.

5. Fuel Rod Growth Stresses - These secondary stresses are due to the fuel rod slipping through the spacer grids. These may be due to the fuel assembly expanding more than the fuel rod due to heatup, or they may be due to fuel rod growth from irradiation.

6. Three Point Grid Stop Stresses - These are bending stresses due to the grid stop loads against the fuel rod cladding.

7. Fuel Rod / Spacer Grid Interaction - These are localized stresses due to contact between the fuel rod cladding and the spacer grid stops.

Classifications of Stresses:

Loading Condition	Stress Category
Pressure Stresses	P_m
Ovality Stresses	P_b
Spacer Grid Interaction	P_l
Flow Induced Vibration	P_b
Radial Thermal Expansion	Q
Differential Rod Growth	Q
Three Point Soft-Hardstop Loading	Q

where

P_m = primary membrane stresses
P_b = primary bending stresses
P_l = primary membrane local stresses
Q = secondary stresses

The results of the stress analysis for the Mark-BW fuel rod are as follows:

Loading Condition	Minimum Margin %
Primary Membrane	45
Primary Membrane + Bending	31
Primary Membrane + Bending + Local	0.2
Primary Membrane + Bending + Local + Secondary	73

The results of the stress analysis for the Advanced W17 HTP fuel rod are as follows:

Loading Condition	Minimum Margin %
Primary Membrane	50
Primary Membrane + Bending	22
Primary Membrane + Bending + Local	14
Primary Membrane + Bending + Local + Secondary	39

Margins are calculated by the following:

Margin % = [(Allowable - Predicted)/Predicted] x 100 %

The minimum unirradiated yield strength of the cladding was used. Minimum rod prepressure and a bounding system pressure (2750 psia) were used to maximize the pressure differential across the cladding. Conservative cladding dimensions were used (maximum internal diameter combined with minimum external diameter). An oxidation layer equivalent to the cladding oxide limit was subtracted from the outer surface of the fuel rod.

The Mark-BW and Advanced W17 HTP designs will operate with sufficient margin for cladding stress for the requirements of References 17 and 21.

Material and Chemical Reaction

The excellent corrosion resistance of the Zircaloy-4 cladding has been developed by examination of production Mark-B fuel assemblies currently in-reactor. The cladding corrosion resistance is the result of a combination of high quality material standards and sound manufacturing techniques. To prevent the possibility of primary hydriding, the pellets are verified to be dry (UTL of 1 ppm of hydrogen).

Alloy M5 exhibits a superior corrosion performance to the previously used optimized (low tin) Zr-4. The alloying elements are Zr, Nb, S, and O. The chemical composition of M5 is the same for all components: cladding, guide tubes, and end plugs. Careful control of the chemistry and thermal-mechanical fabrication parameters imbue the alloy with excellent in-core performance characteristics. To prevent primary hydriding, the fuel pellets are verified to be dry (UTL of 1 ppm of hydrogen).

In the reactor operating environment, a thin, tightly adherent oxide film is initially formed on the surface of the cladding. Continued growth of the oxide layer has several effects. The effective thickness of the cladding wall is reduced as a portion of the base metal is converted to oxide. The cladding operates at a higher temperature because of the lower thermal conductivity of the oxide compared to the base metal. Hydrogen, released from the metal/water reaction, diffuses into the cladding and forms zirconium hydride which results in a decrease in cladding ductility. For Zircaloy-4, the maximum oxide thickness expected at 65,000 MWd/mtU is found to be 127 micron. The cladding hydrogen content at EOL was determined assuming an oxide layer of 127 micron thickness and a 12% hydrogen pickup fraction. The cladding hydrogen content was found to be less than 710 ppm which has been shown to be ductile at reactor operating temperatures. With Alloy M5, the maximum oxide thickness expected at 65,000 MWd/mtU burnup is less than 40 microns. The hydrogen content of M5 cladding is expected to be less than 100 ppm at 65,000 MWd/mtU. Therefore, the oxide growth that the Mark-BW and Advanced W17 HTP fuel rod designs are projected to experience will not result in embrittlement of the cladding.

Fuel Rod Stress-Accelerated Corrosion

Out-of-pile tests show that, in the presence of high cladding tensile stresses, large concentrations of fission products (such as iodine) can chemically attack the zirconium alloy cladding and cause eventual cracking. Extensive post-irradiation examinations (PIEs) have shown no evidence of stress corrosion cracking (SCC).

Fuel Rod Cycling and Fatigue

The fuel rods were analyzed for cladding fatigue using the ASME pressure vessel code (Reference 3) as a guideline. A maximum fatigue usage factor of 0.9 is allowed and determined

by the O'Donnell and Langer design curve[5] for all condition I and II events and one condition III event. The O'Donnell and Langer design curve for irradiated Zircaloy was modified by a factor of two on stress amplitude or twenty on the number of cycles, whichever is more conservative at each point. Further conservatism incorporated into the analysis includes dimensions, external pressure, and prepressure chosen to maximize clad stresses. Allowances for oxide layer buildup and differential temperature across the cladding are assumed. The results for fatigue utilization factor for the Zircaloy-4 clad fuel rods bound the utilization factor for the M5 clad fuel rods. The fuel rod cladding will experience at least 10/40 of the number of transients the reactor pressure vessel will experience in its forty year life (assuming a fuel rod life of at least ten years). The reactor coolant system design transients are summarized in Table 5.2.1-1. The combination of applicable transients and the power histories that are analyzed to determine the fuel rod fatigue usage factor are given in Table 4.5.2-2.

The results of the fatigue analysis for the Mark-BW and Advanced W17 HTP fuel rods show a maximum fatigue usage factor of 0.239 which is below the design limit of 0.9.

Fuel Rod Irradiation Stability

The Zircaloy-4 or alloy M5 cladding retains its high impact strength after irradiation, and overall strength is increased while the ductility is reduced when in service.

Axial gaps between the top nozzle and fuel rods provide sufficient margin to accommodate irradiation growth of the fuel rods in the axial direction.

Fuel Rod Creep Collapse and Creepdown

The fuel rods are analyzed for creep collapse using methods outlined in References 4, 6, 19 and 27. These are, respectively, the topical reports for the creep collapse code CROV and the fuel rod design codes TACO3 and GDTACO, and COPERNIC. TACO3 is used for the UO_2 rods, GDTACO is used for the UO_2-Gd_2O_3 (up to and including Unit 2 Cycle 18 and Unit 1 Cycle 19) rods while COPERNIC is used for both UO_2 and UO_2-Gd_2O_3 rods (starting with Unit 2 Cycle 19 and Unit 1 Cycle 20). The acceptance criterion is that the predicted creep collapse life of the fuel rod exceeds the maximum expected incore life. CROV predicts that the fuel rod will fail due to creep collapse when any of the following happens:

1. The bifurcation buckling pressure is exceeded.
2. The Timoshenko yield point pressure is exceeded.
3. The rate of creep ovalization exceeds 0.1 mils/hr.
4. The maximum generalized non-linear stress exceeds the unirradiated yield strength of the cladding.

The following conservatisms are used in determining creep collapse life of the fuel rod:

1. Minimum fuel rod pre-pressure is used.
2. No fission gas release is assumed.
3. Worst case densification is used.

4. A worst case or enveloping power history is used.
5. Worst case cladding dimensions are used.
   a. Lower tolerance limit for cladding thickness.
   b. Upper tolerance limit for cladding ovality.

Oxide layer growth is accounted for in the TACO3 or GDTACO and COPERNIC analyses, whose output serves as input to the CROV code. These conservatisms are used in determining the creep collapse life of the Mark-BW and Advanced W17 HTP fuel rods.

Using nuclear design inputs, power histories are determined for the Mark-BW and Advanced W17 HTP fuel rods. These histories, with appropriate uncertainty factors, are input into the fuel rod design code, to determine the temperature, pressure, and fast neutron flux level history of the Mark-BW and Advanced W17 HTP fuel rods. These parameters are input into CROV using conservative cladding dimensions. The CROV results determine the burnup where creep collapse is predicted for the Mark-BW and Advanced W17 HTP fuel rods. On a cycle-specific basis, the maximum fuel rod average burnup based upon the CROV creep collapse analysis for the Mark-BW and Advanced W17 HTP fuel rods is verified to be greater than 62,000 MWd/mtU.

Fuel Pellet Dimensional Stability

The mechanical design of the fuel accounts for the effects of densification, swelling, and fission product release. The pellet designs incorporate dished ends and chamfers to prevent hour- glassing and ridging. The dished ends also prevent axial expansion by allowing room for fuel center swelling.

Fuel Pellet Potential for Chemical Reaction

There is some potential for fuel/clad chemical interaction as a result of fission product release. Industry experience has shown this reaction to be minimal. In the event of a breach in the cladding, the reaction of water with the uranium dioxide would be slight. The ability of uranium dioxide to retain fission products coupled with the large volume of coolant results in the released fission products being significantly diluted.

Fuel Pellet Thermal Stability

Since the fuel pellets are basically sintered uranium dioxide, aside from melting, which is precluded by the design, no phase change will occur. The fuel thermal performance codes COPERNIC, TACO3 and GDTACO include models that account for gap conductance, fuel densification and swelling, fuel restructuring, gap conductance, fuel densification and swelling, fuel restructuring, gap closure and fission gas release.

Fuel Pellet Irradiation Stability

Densification has been observed to occur early in the life of the fuel and results in a shrinkage of the fuel pellet. Densification is a function of the temperature and irradiation conditions, initial fuel density, and material characteristics. Another irradiation phenomenon that affects fuel

density is swelling, caused by the generation of fission products. A burnup and power dependent densification and swelling model is presented in the NRC accepted topical report BAW-10162P-A, TACO3 (Reference 4) while a burnup dependent model is presented in the NRC accepted topical report BAW-10231P-A, COPERNIC (Reference 27). Fission gas production and release models are also included in TACO3 and COPERNIC. These models have been correlated to a substantial data base.

Fuel Rod Internal Pin Pressure

Maximum internal fuel rod pressure as a function of burnup is calculated using the best estimate fuel thermal performance codes TACO3, GDTACO and COPERNIC. The internal fuel rod pressure is determined using the computer code COPERNIC (Reference 27) for fuel rods in transition or full cores containing Advanced W17 HTP assemblies (starting with Unit 2 Cycle 19 and Unit 1 Cycle 20). Fuel rods in cores containing all Mark-BW assemblies are analyzed with the TACO3 (Reference 4) and GDTACO (Reference 19) codes (up to and including Unit 2 Cycle 18 and Unit 1 Cycle 19). These codes include models for gap conductance, fuel densification and swelling, fuel restructuring, cladding creep and deformation, gap closure, and fission gas release. An internal pin pressure analysis for the Mark-BW and Advanced W17 HTP fuel is performed for each cycle-specific reload safety evaluation. Based upon the requirements of the cycle-specific core design, the analysis verifies that the fuel can operate to a maximum rod average burnup of 62,000 MWd/mtU for UO_2 and Gd_2O_3 rods and 55,000 MWd/mtU for Gd_2O_3 rods analyzed using the COPERNIC code, resulting in pressures that meet the approved fuel rod gas pressure design criterion.

Pellet - Cladding Mechanical Interaction

The TACO3, GDTACO and COPERNIC codes will be used to predict the local linear heat rates as a function of burnup at which the cladding uniform hoop strain equals 1%. Cladding uniform hoop strain is limited to 1% during normal operation and anticipated operational occurrences. Cladding strain analyses will be performed with nominal fuel rod characteristics and enveloping power history across the range of operational burnups. The predictions will include the effects of cladding oxide formation.

The transient strain is determined using the computer code COPERNIC (Reference 27) for fuel rods in transition or full cores containing Advanced W17 HTP assemblies (starting with Unit 2 Cycle 19 and Unit 1 Cycle 20). Fuel rods in cores containing all Mark-BW assemblies are analyzed with the TACO3 (Reference 4) and GDTACO (Reference 19) codes (up to and including Unit 2 Cycle 18 and Unit 1 Cycle 19).

In the analysis for the Mark-BW and Advanced W17 HTP fuel rods, linear heat rate limits that preserve the transient cladding strain limit of 1%, up to a rod average burnup of 62,000 MWd/mtU for UO_2 and UO_2-Gd_2O_3 fuel rods and 55,000 MWd/mtU for UO_2-Gd_2O_3 fuel rods using COPERNIC, are determined on a cycle-specific basis for application in the reload safety evaluation.

Fuel Rod Temperatures

Fuel and cladding temperatures are evaluated using the best estimate fuel thermal performance codes TACO3 (Reference 4), GDTACO (Reference 19) and COPERNIC (Reference 27). These codes include models for gap conductance, fuel densification and swelling, fuel restructuring, cladding creep and deformation, gap closure, and fission gas release. The use of these codes for fuel and clad temperature analyses are discussed further in Section 4.5.4.2.2.

Peak clad temperatures for non-LOCA transients have been determined using the LYNXT (Reference 10) thermal-hydraulic code. The peak clad temperature was calculated to be less than 2200°F for the locked rotor accident, which is the most severe non-LOCA accident with respect to peak clad temperature. Therefore, the clad temperature requirement is met for the non-LOCA conditions.

Fuel Rod Bow

There are several features of the Mark-BW fuel assembly design that improve its fuel rod bow performance. These features include two spacer springs on each end of the fuel stack inside the fuel rod, not rigidly attaching the intermediate spacer grids to the guide thimbles, and using a keyable spacer grid design. These features reduce the contact stresses that the rod has during insertion and life. By providing a reduction in axial loading, the axial strains induced in the cladding are reduced which translates to lower rod bow. Similarities between the Mark-BW and other Framatome fuel designs (Mark-B, -BZ, -C) permit the use of the rod bow prediction as presented in the rod bow topical report (BAW-10147A-01) (Reference 8). This report has been approved by the NRC for licensing previous Framatome fuel designs.

In most cases, no DNBR penalty due to rod bowing is applied to the Advanced W17 HTP or Mark-BW fuel since predicted bow magnitudes are insufficient to cause a DNBR penalty greater than 1% in fuel with burnup values less than 24,000 MWd/mtU, and fuel with higher burnup does not produce sufficient power to attain design peaking factors. The 1% penalty is accounted for by the pin pitch reduction allowance that is incorporated into the engineering hot channel factor on hot pin average power, discussed in Section 4.5.4.2.3.4. In cases where the predicted rod bow magnitudes are sufficient to cause a DNBR penalty greater than 1%, an augmentation factor is applied to peaking values used to calculate margin to DNB. This penalty is calculated using the method outlined in Section 6.1.1 of BAW-10147PA-R1 (Reference 8).

The fuel rod bow performance of Zircaloy-4 grids has been verified by poolside post irradiation exams (PIE). Water channel measurements made on the Mk-BZ LTA following irradiation to 37.6 GWd/mtU showed the fuel rod bow was enveloped by the predictions from Reference 8.

Potential Effect for Fuel Rod Rupture (Waterlogging)

The Framatome fuel rod is designed to preclude the occurrence of waterlogging. A small defect in the fuel rod cladding, however, could allow water to enter the rod when the Reactor Coolant System is pressurized. The increase in temperature when the reactor is brought up to power causes the internal rod pressure to increase. The magnitude of this pressure increase depends on the amount of water contained in the fuel rod, the magnitude and rate of temperature

increase, and the size of the defect (the defect size defines the capability of the fuel rod to relieve the pressure buildup). SPERT experiments performed at INEL (Reference 11) on waterlogged rods suggest that an energy deposition of 120 cal./gm to 160 cal./gm at reactor periods of 5.5 ms are required to cause rupture of 100% waterlogged rods having no cladding penetration. Normal operational transients are limited to about 40 cal/gm-min (peak rod). Based on the SPERT test results and the conditions occurring in the plant during normal operation, the probability of failing a waterlogged fuel rod is quite small.

Temperature Effects During Transients

The reactor core is designed to preclude any temperature effect that may cause damage to fuel rods during Condition I and Condition II transients. To help assure this, a minimum DNBR of 1.50 BWCMV and a peak cladding temperature limit of 2200°F have been established. Further discussion on damaging temperature effects during transients can be found in Section 4.5.4.3.7.

Energy Release from Cladding Coolant Reaction

Although the reactor is designed to prevent DNB from occurring over the full range of operating conditions; there exists, due to the statistical basis of the BWCMV correlation used to define DNB, a small probability that a fuel rod may go through DNB. Also, there are accident situations categorized as infrequent events, considered and analyzed in Chapter 15, that would result in a predicted DNB. In the unlikely event that DNB occurs, the cladding temperature will begin to increase, causing an increase in the chemical reaction rate between cladding and coolant.

The Baker-Just equation (Reference 12) was used to estimate the energy produced and the thickness of cladding reacted as a function of time with temperature as a parameter. Cladding temperatures considered were 1000, 1200, and 1400°F with reaction times out to 50 minutes.

These temperatures and time ranges envelop the cladding temperatures and reaction times expected from the accident analyses in Chapter 15. The results show that only one percent of the cladding will have reacted after 50 minutes when the cladding temperature is 1400°F. At the same temperature, the energy release is about 0.004 kW/ft, which is less than 0.1% of the average heat rate of the core. From these results, it can be concluded that the potential for chemical reaction between fuel rod cladding and coolant is small and no adverse effects will result during normal operation through the infrequent event type accidents considered and analyzed in Chapter 15.

Energy Released from Waterlogged Rupture

Energy release from waterlogged rupture is not expected to affect neighboring rods. Reference 13 provides experimental results of measured pressure pulses resulting from the failure of two waterlogged fuel rods in an open lattice core. The most significant damage to the core was limited to the bowing of adjacent rods.

Fuel Rod Behavior Effects from Coolant Flow Blockage

The Mark-BW fuel assembly was analyzed for the reduction in flow area for a fully collapsed Mark-BW grid. A spacer grid full collapse is recommended as a worst-case of fuel assembly deformed geometry. A spacer grid collapse is defined as a state in which the grid deformations cause the soft stops to be fully compressed and both hard stops to be in contact. Due to the particular geometry of the Mark-BW grid cell, a collapsed grid as defined above is not geometrically possible. The fuel rod compresses the hardstops slightly. This adds conservatism to the analysis. Results show a 34.6 percent reduction in flow area. A discussion of the effects of a postulated flow blockage can be found in Section 4.5.4.3.10.

4.5.2.1.3.2 Fuel Assembly Structure Stresses and Deflections

Spacer Grids

The top and bottom vaneless spacer grids are constructed of Inconel 718. Inconel 718 has high strength, exceptional corrosion resistance and low thermal stress relaxation at operating temperature. Analytical models were based on tests results and the models determined that the end grids provide adequate stiffness throughout the life of the fuel assembly.

The Zircaloy-4 intermediate spacer grids are designed to follow initial fuel rod irradiation growth and are restrained from large movements which may result in grid mismatch. Through tests and analytical models the intermediate spacer grids were found to provide adequate structural stiffness throughout the life of the fuel assembly. The fuel assembly was analyzed and acceptable margins were found to exist to allow the spacer grids to maintain an adequate guide thimble pattern and diameter to permit control rod insertion during normal operation and upset conditions (Conditions I, II, III, and following a small LOCA, OBE or SSE).

Fuel Assembly Lift

The Mark-BW fuel assembly lift evaluation was performed by comparing the holddown force provided by the fuel assembly leaf springs with the hydraulic forces at various conditions, including the pump overspeed condition. The analysis indicated that the holddown springs provide enough holddown force to prevent fuel assembly liftoff under normal operating conditions. Under the 120% pump overspeed condition, the fuel assembly will experience liftoff but the liftoff will not compress the fuel assembly holddown spring to its solid height, nor will it cause plastic deformation in the spring.

LOCA and/or Seismic Loading

The following criteria have been established for the fuel assembly seismic and LOCA analysis:

(1) For Operational Basis Earthquake (OBE)
The fuel assembly is designed to ensure safe operation following an OBE.

(2) For Safe Shutdown Earthquake (SSE)
The fuel assembly is designed to allow control rod insertion and to maintain a coolable geometry.
(3) For Loss of Coolant Accident (LOCA) or Combined LOCA plus SSE.
The fuel assembly is designed to allow for the safe shutdown of the reactor systems.

In the accident analyses, the lateral effect (LOCA and seismic) and the vertical effect (LOCA) are investigated separately. This leads to a development of a lateral model representing a row of assemblies located on a symmetry axis of the core and a vertical model of the fuel assembly. Only the LOCA effect was analyzed in the vertical direction, as the seismic excitation in this direction will not cause fuel assembly liftoff.

Lateral Analysis

The seismic and LOCA time history motions of the upper grid plate, lower grid plate and core barrel upper core plate elevation were applied to the reactor core model and the fuel assembly deflection and grid impact force responses were determined using the general procedure outlined in the NRC approved topical report BAW-10172P, Rev-1 (Reference 17). In the reactor core model, the fuel assembly was represented by six masses as described in the topical.

The design basis LOCA time histories use “leak-before-break” methodology. The displacements provided are those associated with a worst case attached pipe break. For the cold legs, data for an accumulator line break are furnished. For the hot legs, data for a pressurizer surge line break are provided.

For the Safe Shutdown Earthquake (SSE), the loads experienced by the fuel assemblies were below the elastic load limit which begins to cause permanent deformation of the spacer grid. Since there is no permanent deformation, a coolable geometry is maintained and control rod insertion is allowed. Therefore the requirement for a safe shutdown earthquake is met. As the spacer grid impact loads were within the elastic load limit for the SSE, these results also satisfy the Operational Basis Earthquake (OBE) requirements that the assembly or component not exceed its yield limit. Usually the magnitude of the OBE is half the magnitude of the SSE. Hence, a seperate OBE analysis was not performed. The allowable loads for all categories of loss of coolant accident (LOCA) and a combined SSE and LOCA condition are limited by the requirement that a coolable geometry be maintained. Since none of the loads in any of these cases approach the elastic load limit for the spacer grid, the requirement of a core coolable geometry for LOCA and combined LOCA/SSE has been met.

A bounding analysis of a mixed core configuration (Mark-BW and Westinghouse Vantage 5H and Standard fuel assemblies) representative of a transition cycle was performed. The results of this analysis were compared with the faulted conditions analysis results of the full Mark-BW core configuration. The resulting change in the spacer grid impact loads are minor and within the elastic load limit. Hence, the requirement of a coolable core geometry is met.

Vertical LOCA Analysis

For the vertical LOCA analysis, a one-dimensional (axial) finite element model as described in BAW-10172P was used to represent the fuel assembly structure and was analyzed using a general purpose finite element code. The purpose of the analysis was to determine the loads on a Mark-BW fuel assembly resulting from a postulated LOCA. The vertical LOCA force time histories for the fuel assembly response analysis were calculated. The design basis LOCA provided for the fuel assembly analysis was the ”leak-before-break” LOCA event. The force time histories for the cold legs are for an accumulator line break and those for the hot legs are for a pressurizer line break.

Analyses were performed at both beginning and end of life to determine the worst case loading condition. The results of the analysis show that because of the holddown spring applied preload and stiffness, the fuel assembly during the LOCA does not contact the upper core plate. These forces are well below conservatively calculated allowable loads for the guide thimbles and the fuel rods.

Fuel Assembly Structural Analysis

The fuel assembly was evaluated for structural integrity under faulted conditions. It was shown that the fuel assembly mechanical integrity is maintained for the SSE and a combined SSE plus LOCA event with adequate structural margin. The results of the SSE analysis meet the design criteria for OBE described in Section 3 of FCF Topical Report BAW 10133P Rev 1 (Reference 14). So separate OBE stress results were not required. Also the SSE requirement of control and insertion was fulfilled for a combined SSE plus LOCA and therefore provides added conservatism for the analysis. ASME Code subsection NG-3000 (Reference 3) stress criteria is used for the OBE (Code Level B) and Appendix F (Ref. 3) for the SSE plus LOCA (Code Level D). In some cases, failure loads as established by testing were incorporated per the ASME code.

The Mark-BW fuel assembly is structurally adequate for the faulted conditions presented for the Sequoyah Nuclear Plant Units 1 and 2.

Shipping Loads

An analysis was performed to ensure the structural adequacy of the Mark-BW design under the shipping loads specified in Section 4.5.2.1.1.2. The results of the analysis showed that the fuel assembly and its components will maintain their structural integrity under the specified shipping loads. Crush tests have been performed to ensure that the spacer grid dimensional stability is maintained during normal shipping and handling conditions. Summaries of the results are provided below.

1. The upper and lower plenum springs maintained the fuel column position and prevented the formation of axial gaps. This was done by maintaining a preload on the fuel stack to counter acceleration loads up to '4G' which is significantly above those expected to occur during shipping and handling.

2. The fuel rod did not slip through the spacer grids under the maximum axial shipping loads.

3. The spacer grids maintained their structural integrity under the maximum lateral shipping loads, and the maximum clamping loads.

4. Spacer grid soft stops maintained acceptable fuel rod grip forces under the '6G' lateral shipping loads.

Handling Loads

The Zircaloy-4 intermediate spacer grids of the Mark-BW fuel assembly include several design features which promote resistance to hanging-up with other fuel assemblies or equipment during fuel handling. The Mark-BW design utilizes lead-in tabs between the fuel rods on the upper and lower edges of the outer strips of the spacer grid assemblies. The leading edges of the exterior strips of the spacer grid assemblies are inboard of the plane of the outer surface of the peripheral fuel rods, to provide better resistance to hangup during fuel handling. In addition, the minimum margin of safety for handling during assembly shutdown is shown to be adequate.

Cycling and Fatigue

The fuel assembly is subjected to cyclic fatigue loading due to transients, seismic events and flow induced vibration. The effects of this loading has been assessed and, where appropriate, a fatigue analysis has been performed. The results of these analyses show that the cumulative fatigue usage factor is less than 1.0. The allowable fatigue life is determined by using ASME fatigue curves or taking the mean fatigue life curve and applying a factor of 2 on stress or 20 on cycles, whichever is most conservative. The fatigue curve used for Zircaloy material is the O'Donnell and Langer design curve (Ref. 5).

The cyclic loads on the fuel assembly and its components have been divided into three categories: Conditions I, II and III transients; seismic and LOCA events; and flow induced vibration. Seismic and LOCA events are discussed earlier in this section. Transients and flow induced vibration including tests performed are discussed below.

Transients

The reactor transients are mainly variations of temperature and pressure. Flow velocities do not increase significantly over the steady state value. The fuel assembly structural components are not pressure retaining boundaries and remain at bulk coolant temperature. Therefore, many transients do not cause significant loads on the fuel assembly or its components. In particular, pressure changes are insignificant loads. With respect to the design transients from Table 5.2.1-1, for a fuel assembly with an assured life of seven years, the allowable stress taken from the appropriate fatigue curve for the corresponding number of cycles is far in excess of the allowable values used in the static analysis. Since the static analysis accounts for the maximum loads caused by these transients then the cumulative usage factor is assured to be less than one.

Flow-Induced Vibration

The fuel assembly is subjected to vibration induced by flow of the reactor coolant. A Mark-BW prototype fuel assembly was fabricated for use in the test program. The end of life condition was simulated by intentionally oversizing the rod cells of the spacer grids. The Inconel end spacer grids were relaxed approximately 60% and the Zircaloy-4 intermediate spacer grids were relaxed approximately 90%. The fuel rod internals were typical of production parts with pressed tungsten-nickel-copper powder pellets used to simulate the fuel pellets. End of life conditions are the worst case for testing fuel assembly vibration and wear characteristics and mechanical properties. Hydraulic flow testing of the prototype fuel assembly was conducted in the Control Rod Drive Line (CRDL) facility at the Alliance Research Center (ARC). Life and wear tests were conducted to verify the wear resistance due to vibrations. Two 500 hour tests were conducted with the prototype fuel assembly and a thorough examination revealed no abnormal wear.

Testing was conducted to determine the dynamic response to the relaxed Mark-BW fuel assembly to a quick release in air. The effects of temperature and flow on these responses are based on past testing of the Mark-C 17X17 fuel assembly. The frequency and damping characteristics of the fuel assembly were used to benchmark analytical models for the seismic and LOCA analyses. The frequencies used were adjusted for water, temperature, and flow.

Assembly Bow

Fuel assembly bow was measured on the four Mark-BW lead assemblies during Duke Power's McGuire, EOC-5 PIE campaign. The data shows a maximum bow of approximately 0.8 inch on these once burned assemblies. Fuel assembly bow is therefore not a significant concern in Mark-BW fuel assemblies.

Fretting Wear

The fuel assembly design shall be shown to provide sufficient support to limit fuel rod vibration and clad fretting wear to within acceptable depths. A life and wear test was conducted at maximum reactor flow conditions for more than 1000 hours to evaluate the fretting characteristics of fuel rods and spacer grids. The results indicated that there exists an initial "wearing-in period" during which the fuel rods and grid stop interfaces experience high contact forces. After wearing-in, the grids tend to relax slightly and there is irradiation hardening of the material of interest, reducing the contact force. The long-term progressive wear rate then decreases significantly. There was no indication of adverse fretting wear or progressive wear of the cladding. After 1000 hours of testing, the deepest wear measured was 1.2 mils.

4.5.2.1.3.3 Operational Experience

Framatome had considerable experience with its Mark-BW fuel assembly design starting with the lead test assemblies in Duke Power’s McGuire Unit 1, Cycle 5. The design has since been

proven in both Duke Power's McGuire and Catawba Units and Portland General Electric's Trojan Unit, reaching an EOC fuel assembly burnup to-date in excess of 52,000 MWd/mtU in Catawba 1, Cycle 8.

AREVA NP Inc. has considerable experience with its Advanced W17 HTP fuel assembly design. As of December 2011, 1,838 Advanced W17 HTP fuel assemblies are either in core or have been discharged reaching an EOC fuel assembly maximum burnup of 68,000 MWd/mtU. The Advanced W17 HTP fuel design has been used in reload batch quantities at Harris Unit 1 and numerous reactors worldwide.

4.5.2.1.3.4 Test Rod And Test Assembly Experience

Four lead assemblies at Duke Power's McGuire 1 Nuclear Station began their irradiation in cycle 5 in 1987. These assemblies were irradiated for three cycles and reached a maximum fuel assembly burnup of 42,200 MWd/mtU. The assemblies and selected fuel rods were examined after each cycle of irradiation. The PIE scope for each examination is shown in Table 4.5.2-1. Results from these examinations have been combined with results from a similar program for the Framatome Mark-B fuel assembly design, which reached an assembly burnup of 58,300 MWd/mtU, as well as industry programs, and the results have been reflected in currently approved Framatome methods.

4.5.2.1.4 Testing and Inspection Plan

4.5.2.1.4.1 Quality Assurance Program

AREVA NP Inc. engineering specifications require that core components be fabricated under an approved quality control program. This includes shop quality control procedures which are audited by AREVA NP Inc. quality assurance personell. In addition, special process procedures are approved by AREVA NP Inc. design personnel as required by the procurement documents.

AREVA NP Inc. manufactures core components under a controlled manufacturing system, which includes complementary written process procedures and inspection provisions. Extensive attention is given to processing details to ensure a reliable, reproducible, quality product. The fabrication activities are supported and monitored by quality control as described in the Fuel Management Manual. The inspections described herein are those specified for the various components and assemblies. Additional inspections are performed routinely along with the required inspection program to further assure the quality of the final product

4.5.2.1.4.2 Quality Control

The spacer grids are fabricated by an AREVA NP Inc. affiliate. After assembly of the grids, the welds are visually inspected for conformance, and sample quantities of the welds from each grid are optically enlarged and dimensionally inspected. Dimension inspection is accomplished using a vision inspection measuring machine interconnected to a computer.

The cage assembly is fabricated by AREVA NP Inc. The spacers are positioned by use of precise fixtures and after insertion of guide tube assemblies are welded at each elevation of a spacer (HTP & IFM). The HMP spacer due to its material make-up (nickel alloy 718) is held in place by the welding of Zircaloy-4 spacer capture rings above and below the HMP spacer.

The fuel assembly envelope dimensions are checked with a gauge. The assembly is checked for straightness, twist, bow, and envelope. Water channels are measured at axial locations. The guide tubes are checked for alignment and restriction of control rod insertion. Final visual inspection is performed using high-intensity lights.

The fuel pellets are fabricated by AREVA NP subject to the following inspections:

- Analytical examinations include total uranium content, ^{235}U weight percent and grams/inch, open porosity, hydrogen content, O:U ratio, chemical impurities, equivalent boron content and loadability.
- Dimensional and density inspection including surface finish, surface condition, and cleanliness.
- Resinter test.

During assembly, the fuel rod goes through various testing and quality control programs including:

- After the welding of the first end cap, the weld is inspected for presence of upset on the exterior of the fuel rod.
- The rods are loaded after the fuel stack is weighed and the column length is measured.
- The plenum at the open end of the fuel rod is then measured to verify proper seating and length of the column.
- The weld on the second end cap is inspected in the same manner as the first.
- The sealed rods are scanned to verify fuel column integrity, the fuel column length, and the proper enrichment of the pellets.
- The final fuel rod inspection includes alpha-scan of the end of the rod in which the fuel pellets were loaded to ensure that there is no fissile material contamination; dimensional and visual inspection; and helium leak test.

For the UO_2-Gd_2O_3 fuel rods, the fuel rod cladding, springs, and end cap bar stock are inspected at AREVA NP Inc. then sent to the vendor.

4.5.2.1.4.3 Onsite Inspection

AREVA NP Inc. provides documentation for handling fuel assemblies and shipping containers and site support for the inspection of reload assemblies manufactured and delivered by AREVA NP Inc.

4.5.2.2 REACTOR VESSEL INTERNALS

Applicable information is contained in Section 4.2.2.

4.5.2.3 REACTIVITY CONTROL SYSTEM

Applicable information is contained in Section 4.2.3.

4.5.2.3.1 Reactivity Control Components

In addition to the information contained in Section 4.2.3, the following is applicable:

Burnable Poison Assembly

The Framatome 17x17 burnable poison rod assembly (BPRA) consists of a cluster of up to 24 burnable poison rods attached to a common upper structure assembly. The BPRA is a temporary reactivity control component that is inserted into the guide thimbles of the fuel assembly. Each assembly may consist of a combination of burnable poison rods and thimble plugs. The position of these devices remain constant throughout a given cycle. The BPRA is shown in Figure 4.5.2-14.

The burnable poison rods each contain a 126 inch column of poison pellets encapsulated within cold-worked, seamless, Zircaloy-4 clad. The rods are plugged and seal welded to provide isolation from the primary coolant, fuel assembly, and guide thimble surfaces. The individual pellets are solid, circular cylinders of sintered ceramic comprised of a uniform dispersion of boron carbide (B_4C) in an alumina (Al_2O_3) matrix. The pellets are made with varying concentrations of B_4C. The Al_2O_3-B_4C pellet stack is positioned axially within the rod by a zirconium solid spacer. An upper end plug seals the top end of the rod and provides for a threaded attachment between the finished rod assembly and the control component holddown mechanism. A lower end plug seals the rod bottom end and provides lead-in guidance with the fuel assembly guide thimbles. A stainless steel spring spacer, located in the plenum region above the pellet stack, prevents gross movement of the stack during shipping and handling conditions. Prior to final seal welding of the lower end plug, each rod is pressurized with high purity helium for improved heat transfer and reduced cladding creep ovality in core. A burnable poison rod is shown in Figure 4.5.2-15.

The thimble plugs are short, sealed rods as shown in Figure 4.5.2-14. These rods may be placed in those guide thimble locations which do not contain burnable poison rods. When present, the thimble plugs reduce the amount of coolant that flows through an otherwise empty guide thimble.

The poison rods and thimble plugs in each BPRA are grouped and attached together at the top end of the rods to a holddown assembly by a flat perforated retaining plate that fits within the fuel assembly top nozzle and rests on the adapter plate. The retaining plate and the poison rods are held down and restrained against vertical motion through a spring pack which is attached to

the plate and is compressed by the upper core plate when the reactor upper internals assembly is lowered into the reactor vessel. Their lateral position is maintained by the guide thimbles of the fuel assembly. This arrangement ensures that the poison rods cannot be ejected from the core by flow forces.

The individual poison rods are shouldered against the underside of the retainer plate and securely fastened at the top by a threaded nut which is then locked in place by a single weld between the two components. The square dimension of the retainer plate is larger than the diameter of the flow holes through the core plate. Thus a failure of the holddown bar or spring pack does not result in ejection of the burnable poison rods from the core.

4.5.2.4 REFERENCES

1. ASTM B353, Wrought Zirconium and Zirconium Alloy Seamless and Welded Tubes for Nuclear Services.

2. ASTM B351, Specifications for Hot Rolled and Cold Finished Zirconium Alloy Bars, Rods, and Wire for Nuclear Applications.

3. ASME Boiler and Pressure Vessel Code, Section III, “Nuclear Power Plant Components,” 1992 Edition.

4. BAW-10162P-A, TACO3 - Fuel Pin Thermal Analysis Computer Code, B&W Fuel Company, October 1989.

5. W.J. O'Donnell and B.F. Langer. Fatigue Design Basis for Zircaloy Components. Nuclear Science and Engineering, Volume 20, pp 1-12.

6. BAW-10084P-A, Rev. 3, Program to Determine In-Reactor Performance of BWFC Fuel Cladding Creep Collapse, B&W Fuel Company, July 1995.

7. Not Used

8. BAW-10147P-A, Rev. 1, Fuel Rod Bowing in Babcock & Wilcox Fuel Designs - Revision 1, May 1983.

9. Not Used

10. BAW-10156-A Rev. 1, -LYNXT- Core Transient Thermal-Hydraulic Program, August 1993.

11. Stephan, L.A. "The Effects of Cladding Material and Heat Treatment on the Response of Waterlogged UO_2 Fuel Rods to Power Bursts." IN-ITR-111. January 1970.

12. Baker, L. and Just, L.C. "Studies of Metal-Water Reaction at High Temperatures - Experimental and Theoretical Studies of the Zirconium Water Reaction." ANL-6548. May 1962.

13. Grund, J.E. "Experimental Results of Potentially Destructive Reactivity Additions to an Oxide Core." IDO-17028. December 1964.

14. BAW-10133P, Rev. 1, Mark C Fuel Assembly LOCA-Seismic Analyses -Revision 1-, May 1979.

15. Not Used

16. BAW-10096A, Rev. 4, B&W NPGD Quality Assurance Program for the Nuclear Steam System and Nuclear Steam Core Product Lines, March 1982.

17. BAW-10172P-A, Mark-BW Mechanical Design Report, Babcock & Wilcox, Lynchburg, Virginia, December 1989.

18. BAW-10183P-A, Fuel Rod Gas Pressure Criterion (FRGPC), B&W Fuel Company, July 1995.

19. BAW-10184P-A, GDTACO - Urania Gadolinia Thermal Analysis Code, B&W Fuel Company, February 1995.

20. BAW-2328, Blended Uranium Lead Test Assembly Design Report, July 1998.

21. BAW-10227P-A, Rev. 1, Evaluation of Advanced Cladding and Structural Material (M5) in PWR Reactor Fuel, Framatome Cogema Fuels, Lynchburg, Virginia, June 2003.

22. BAW-2370P, Rev 3, “Design Report and Licensing Evaluation for Sequoyah Nuclear Plant ALLIANCE LTA Program,” Framatome Cogema Fuels, Lynchburg, Virginia, October 2000.

23. BAW-2149-A, “Evaluation of Replacement Rods in BWFC Fuel Assemblies,” B&W Fuel Company, Lynchburg, Virginia, September 1993.

24. BAW-10186P-A, Rev.2, Extended Burnup Evaluation, Framatome ANP, Lynchburg, Virginia, June 2003.

25. Document 51-9048057-002, Sequoyah Mark-BW(A) Fuel Assembly Design Change Report, AREVA NP Inc., Lynchburg, Virginia, September 2007.

26. ANP-2692P, Rev. 1, Batch Implementation of Blended Low Enriched Uranium Fuel at Sequoyah Nuclear Plant, April 2008.

27. BAW-10231P-A, Rev. 1, COPERNIC Fuel Rod Design Computer Code, Framatome ANP, Lynchburg, Virginia, January 2004.

4.5.3 NUCLEAR DESIGN

4.5.3.1 DESIGN BASES

This section describes the design bases and functional requirements used in the nuclear design of the fuel and reactivity control system and relates these design bases to the General Design Criteria (GDC) in 10 CFR 50, Appendix A. The following sections indicate how these design bases have been implemented in the licensing basis for Advanced W17 HTP fuel and Mark-BW fuel that is operated in Sequoyah Units 1and 2.

4.5.3.1.1 Fuel Burnup

4.5.3.1.2 Negative Reactivity Feedbacks (Reactivity Coefficient)

No change to this entire section. See Section 4.2.1.1.

4.5.3.1.3 Control of Power Distribution

Basis:

The nuclear design basis is that:

(1) Under normal operating conditions, at full power, the fuel will not be operated at a linear power greater than the HFP average linear power multiplied by the factor $F_Q^{RTP} * K(z)$, including as a minimum allowances for calorimetric errors, nuclear uncertainty, and densification effects. F_Q^{RTP} is the maximum heat flux hot channel factor, $F_Q(X, Y, Z)$, at 100 percent power and is specified in the Core Operating Limits Report as required by Technical Specification 3.2.1. K(z) is the normalized $F_Q(X, Y, Z)$ as a function of core height and is set in the Core Operating Limits Report.

(2) Under abnormal conditions including the maximum overpower condition, the fuel peak power will not cause fuel melting as defined in Section 4.4.1.2.

(3) The fuel will not operate with a power distribution that violates the departure from nucleate boiling (DNB) design basis (as discussed in Section 4.4.1.1) under Condition I and II events including the maximum overpower condition.

(4) Fuel management will be such as to produce rod powers and burnups consistent with the assumptions in the fuel rod mechanical integrity analysis of Section 4.2 (Westinghouse fuel) and 4.5.2 (AREVA fuel).

The above basis meets GDC 10.

Discussion:

Approved methodology is employed to analyze core power distributions and to set core safety and operating limits. Calculation of limiting power distributions is accomplished by simulating xenon transients that are assumed to initiate within normal operating limits. Limiting xenon conditions are calculated from the transients to simulate the limiting power distributions.

Peaking allowances are applied to account for effects that are not explicitly modeled or that must be included to account for uncertainties. A calculational nuclear uncertainty factor is applied, which contains allowances for the nuclear reliability uncertainty, manufacturing tolerances, irradiation-induced rod bow, and irradiation-induced assembly bow. The peaking allowances described above are utilized for the analysis of both normal operation and anticipated transients. During power operation, periodic flux maps are generated using the movable incore detector system to verify that the reactor core is operating as designed.

4.5.3.1.4 Maximum Controlled Reactivity Insertion Rate

Applicable information is contained in Section 4.3.1.4.

4.5.3.1.5 Shutdown Margins

Basis:

The discussion contained in Section 4.3.1.5 remains valid for Advanced W17 HTP fuel and Mark-BW fuel. Additionally, Technical Specification 3.1.1 requires Shutdown Margin be within the limits specified in the COLR for Mode 2 with keff < 1.0, and Modes 3, 4 and 5. Maintaining the Shutdown and Control Bank Insertion limits in accordance with Technical Specifications 3.1.5 and 3.1.6 will ensure adequate shutdown margin for Mode 2 with keff ≥ 1.0 and in Mode 1. The most limiting accident for the SDM requirements is based on a main steam line break accident as described in Section 15.4.2.

In all analyses involving reactor trip, the single, highest-worth RCCA is postulated to remain in the fully withdrawn position (stuck rod criterion). This satisfies GDC-26.

4.5.3.1.6 Stability

Basis:

The core will be inherently stable to power oscillations of the fundamental mode or such oscillations will be reliably and readily detected and suppressed. This satisfies GDC 12.

Discussion:

The presence of Advanced W17 HTP fuel and Mark-BW fuel in Sequoyah does not alter the conclusions reached by Section 4.3.1.6. The cycle-specific power distribution analysis verifies that the reactor core design is self-damped with regard to axial xenon oscillations. Plant procedures ensure that any axial power oscillations will be readily dampened. Additionally, the presence of the OPDT and OTDT trips provides final assurance that fuel design limits are never exceeded.

4.5.3.1.7 Anticipated Transients Without Trip

Applicable information is contained in Section 4.3.1.7.

4.5.3.2 DESCRIPTION

4.5.3.2.1 Nuclear Design Description

The implementation of the Advanced W17 HTP and Mark-BW assembly designs does not change the basic conclusions drawn in Section 4.3.2.1; however, differences as a result of assembly design changes are as noted in Table 4.5.3-1. The Advanced W17 HTP, Mark-BW, Advanced Mark-BW(A), and ALLIANCE™ fuel assemblies have similar neutronic characteristics. Core average and assembly-specific data assuming full cores of Advanced W17 HTP and Mark-BW assemblies are shown in Table 4.5.3-1.

4.5.3.2.2 Power Distribution

4.5.3.2.2.1 Definitions

Analytical F_{Qc}

For the purposes of discussion it is convenient to define subfactors of F_Q; however, design limits are set in terms of the total peaking factor. The analytical or calculated value of F_Q denoted as F_{Qc} is defined as:

F_{Qc} = total local peaking factor (calculated heat flux hot channel factor)

$$= \frac{\text{Maximum Local kW/ft}}{\text{Average kW/ft}}$$

$$F_{Qc} = F^N_Q(x,y,z) \times (F^E_Q \times F^U_Q \times F_R \times F_A \times F_{BP})^{95/95} \times F_i$$

where

F^N_Q (x,y,z) = the three-dimensional local power in the peak pin,

F^E_Q = local engineering heat flux hot channel factor (i.e., fuel rod manufacturing tolerance defined in Section 4.5.4.2.2.4),

F^U_Q = the calculational nuclear reliability factor,

F_R = fuel rod bow factor,

F_A = Assembly bow factor

F_{BP} = Burnable Poison (BP) manufacturing tolerance,

F_i = other factors to account for grid effects, quadrant power tilt, and cycle flexibility (further discussed in Section 4.5.3.2.2.6).

F^E_Q, F^U_Q, F_R, F_A, and F_{BP} are statistically combined at the 95% probability level with 95% confidence, and this is referred to as the Combined Nuclear Uncertainty Factor. The spike factor associated with fuel pellet gap formation has been shown to cause negligible peaking increases with the higher density fuel now currently in use. Therefore, no specific penalty is applied.

Measured F_{Qm}

The measured value of F_Q, denoted as F_{Qm}, is computed at a minimum of five segment levels in the core using flux traces from the movable incore fission detectors. F_{Qm} is determined for each segment as:

$$F_{Qm} = F^M_Q (x,y,z) \times MRF$$

where

MRF = the measurement reliability factor and

$F^M_Q (x,y,z)$ = the three-dimensional measured peak.

When the core power distribution is monitored, the moveable incore detector system is used to compare the measured power distribution with the design steady-state power distribution. The design steady-state power distribution includes an expected variation, called the Deviation Allowance, which represents the amount that the measured power can exceed the predicted value and still be considered within the design. The Deviation Allowance was developed by comparisons of measured power distributions with predicted power distributions (Reference 1).

If a measured value at a given location fails the comparison described above, a margin calculation is performed to verify that adequate margin exists for the location of interest. When surveillance margin calculations are performed, F_{Qm} is processed further for comparison to F_{Qc} to assure that the core is operating as designed. Should negative margin be calculated, the Technical Specifications provide required actions and completion times to ensure that core peaking is reduced to less than the allowed limits.

4.5.3.2.2.2 Radial Power Distribution

4.5.3.2.2.3 Assembly Power Distributions

Applicable information is contained in Section 4.2.2.3.

4.5.3.2.2.4 Axial Power Distributions

Applicable information is contained in Section 4.2.2.4.

4.5.3.2.2.5 Local Power Peaking

The spike densification peaking factor is used to account for the increased peaking due to inter-pellet gap formation. This factor currently is not applied to LOCA linear heat rate limits for either Advanced W17 HTP fuel or Mark-BW fuel. The power peaking effect due to inter-pellet gap formation to be applied to centerline fuel melt (CFM) limits is subsequently discussed.

The concern over the increased power peaking due to inter-pellet gap formation began in the early 1970s when unpressurized PWR fuel rods exhibited cladding collapse. Axial gaps were caused by fuel pellet hang-up and densification. In an area where a gap formed, the pressure differential between the rod and the primary water caused the failure of the cladding. The gaps formed between pellets also caused an increase in power in the region near the gap and thus was a concern in terms of power peaking.

Both Advanced W17 HTP and Mark-BW fuels are designed to alleviate the formation of large gaps and to prevent cladding creep collapse. The fuel fabrication produces fuel which undergoes a smaller amount of densification and the fuel rods are pre-pressurized. These features have led to gap sizes that are an order of magnitude smaller than those observed in the non-pressurized, highly densified fuel rods. In order to determine the effect of inter-pellet gaps on power peaking, AREVA addressed the size and distribution of gaps, and effect of gaps on power peaking.

The result of the analyses demonstrated that a conservative estimate of the peaking factor due to spike densification for AREVA fuel is less than 1%. This factor is overly conservative in light of the thermal expansion characteristics of the Advanced W17 HTP and Mark-BW fuel designs. Two other factors support not including an explicit peaking factor due to inter-pellet gap formation. First, the crucial time for power peaking is early in the life of the fuel rod. The fuel rods measured after a single cycle of irradiation showed no gaps in any of eight rods examined. Since no gaps were present, no additional peaking increase occurred in these rods due to axial gaps at the time in life which is a major concern for power peaking. Second, an EPRI report (Reference 2) utilizing axial gap data from three PWR fuel suppliers (including AREVA) obtained similar results and reached a similar conclusion concerning axial gap induced power peaking. Therefore, a penalty for densification to augment calculated power peaking is not applied to the calculation of CFM limits for the Advanced W17 HTP and Mark-BW fuel assembly designs.

4.5.3.2.2.6 Limiting Power Distributions

Core power distributions are influenced by fuel cycle design parameters and operational conditions. Major factors in the fuel cycle design include fuel enrichment, burnable poison loading, control bank pattern, and type of fuel management scheme employed. During power operation, the core power distribution is dependent primarily upon fuel depletion, power level, control bank position, and xenon distribution. Core power distributions resulting from operation over the entire expected range of these parameters is analyzed and compared with the thermal

design limits and accident initial condition limits to define the necessary restrictions on f(ΔI), axial flux difference (AFD), and control bank position. Power distributions are calculated in three-dimensional geometry using an approved nuclear design code with thermal feedback effects modeled.

A complete discussion of the analysis of core power distributions is provided in an NRC-accepted topical report (Reference 1). This section summarizes the considerations and calculational methods used to determine the core safety and operating limits.

Fuel Cycle Depletion

The core power distribution under steady-state core conditions is obtained from a steady-state depletion of the as-designed fuel cycle. The depletion is simulated with a small amount of control bank insertion to allow for potential rod shadowing effects near the top of the active fuel in the power distributions.

Reduced Power Operation

Perturbations to both the local and global power distributions due to reduced power operation are addressed by providing control bank operation guidelines and recommendations. The guidelines preclude operation with power distributions that would cause the peaking limits to be exceeded as a result of extended operation at reduced power.

Xenon Transient Simulations

The three-dimensional power distribution analysis requires determination of peaking increases due to potential transient xenon. Since the core xenon distribution is dependent upon power level, fuel depletion, time at a particular power level, and control rod movements, transient xenon simulation for reload cores must consider the combined impact of these factors.

Xenon transients are simulated at various times in core life to obtain the effects of transient xenon re-distribution on power peaking. Both maximum and minimum xenon conditions are generated from the transients. The extremes of core operation, such as excessive insertion of the control banks, are simulated at maximum and minimum xenon conditions to generate the limiting power distributions.

Peaking Factors

Once the equilibrium and transient xenon power distributions have been established, peaking margins are defined in order to determine the limits on f(ΔI) and AFD. Peaking margin is defined as follows:

Margin (%) = 100 x (1 - Augmented Calculated Peak/Allowable Peak)

Correlations between peaking margin and axial flux difference can be formulated to determine the fΔI) and AFD limits. For comparison to the allowable limits, the calculated peaking factors are augmented to account for manufacturing tolerances, calculational uncertainties, and modeling simplifications. For calculation of LOCA and CFM peaking margins, the augmentation factors are applied in the following manner:

$$F_{Qc}(x,y,z) = P_t(x,y,z) \times F_1 \times F_2 \times F_3 \times F_4$$

where

$F_{Qc}(x,y,z)$ = augmented calculated peak,

$P_t(x,y,z)$ = total 3D local peaking factor for an assembly node

F_1 = axial peaking increase due to grids,

F_2 = allowance for excore quadrant power tilt,

F_3 = combined calculational uncertainty,

F_4 = operational flexibility.

The large and small break LOCA analyses that support the Advanced W17 HTP and Mark-BW fuel designs were performed to support a rated thermal power level of 3455 MW(th), based upon a maximum allowable normalized local power density of 2.65 for F_Q. The ECCS analyses demonstrated that the small break LOCA is not limiting with respect to large break LOCA analysis results.

The augmented calculated radial peak is defined as follows:

$$F_{\Delta H}(x,y) = [P_t(x,y,z)/Ax(x,y)] \times F_2 \times F_4$$

where

$F_{\Delta H}(x,y)$ = augmented calculated radial peak,

$Ax(x,y)$ = axial peak for the assembly,

and $P_t(x,y,z)$, $P_{rl}(x,y)$, F_2, and F_4 are defined as before. For calculation of DNB peaking margins, the allowable peak used in the margin equation is determined by dividing the Maximum Allowable Peak (MAP) limit by Ax(x,y). The MAP limits contain allowances for calculational uncertainty and effects of spacer grids; therefore, augmentation factors for these items are not included in the calculated peak. See Reference 1 for a description of MAP limits.

Spacer Grids

Fuel assembly spacer grids are located at discrete axial locations along the fuel assembly, causing local flux depressions due to neutron absorption in the grid material. This effect is not

modeled in most three-dimensional design calculations, and therefore a peaking factor is applied to the calculated nodal peaks to account for the axial peaking increase due to the presence of grids. This factor may vary based on the type of grid material in the assembly and the type of material in neighboring assemblies.

Excore Quadrant Power Tilt

Quadrant power tilt is monitored by the excore detectors to measure global changes in the radial power distribution between incore flux maps. The incore flux maps are used to monitor core peaking and to verify that all peaking limits are satisfied. After taking an incore flux map associated with an incore-excore calibration, the excore quadrant power tilt is calibrated to zero. Thus, the quadrant power tilt represents the change in quadrant tilt from the previous calibration of the excore detectors. The relationship between peaking increase and excore quadrant power tilt is determined from simulation of various tilt-causing mechanisms. Including the allowance for quadrant tilt in the calculation of F_{QC} allows the reactor core to operate at the f(ΔI) and AFD limits with a quadrant tilt up to the steady-state limit specified in the COLR.

Combined Calculational Uncertainty

The following calculational uncertainties are combined to provide a single peaking factor: calculational nuclear reliability factor, fuel and burnable poison manufacturing tolerances, irradiation-induced rod bow, and irradiation-induced assembly bow.

The fuel manufacturing tolerance accounts for the variations in fuel density, pellet dimensions, enrichment, and cladding dimensions within their tolerance limits. Including the full factor is conservative because the effects of these variations are implicitly contained in the Combined Nuclear Uncertainty Factor.

Fuel rod bowing has the potential to affect both local power peaking and the margin to DNB. The Advanced W17 HTP and Mark-BW fuel assembly designs incorporate several features that make their fuel rod bow performance similar to that of other AREVA fuel designs. As a result, the predicted rod bow for both the Advanced W17 HTP and Mark-BW fuel designs can be taken from BAW-10147P-A, Rev. 1 (Reference 3). Using this prediction, no DNBR penalty due to rod bowing is applied to these AREVA fuel designs, since predicted bow magnitudes are insufficient to cause a DNBR penalty greater than 1% in fuel with burnups less than 24,000 MWd/mtU. The 1% penalty is accounted for by the pin pitch reduction allowance that is incorporated into the engineering hot channel factor on pin average power. This factor is combined statistically with other uncertainties to establish the statistical design DNBR limit from which the DNB maximum allowable peaking limits are computed. Therefore, it is not applied as a peaking augmentation factor in DNB peaking margin calculations. Fuel with higher burnup incorporates an additional burnup dependent augmentation for peaking due to the assumed increase in DNB penalty caused by fuel rod bow.

BAW-10147P-A, Rev. 1 also addressed peaking effects due to fuel assembly bow. The peaking increase due to assembly bow was determined based upon the maximum assembly bow with a boron concentration of 17 ppm. The peaking increase will be smaller for reduced bow and at higher boron concentrations. The assembly bow peaking factor is not applied toward LOCA limits since the increased gap provided by the assembly bow will result in improved cooling for the increased RPD.

The peaking increase due to the power spike that results from a gap between UO_2 pellets has been analyzed and documented in topical report BAW-10054, Rev. 2 (Reference 4). These gaps may occur when pellet-cladding interaction causes a pellet to stick to the cladding. The underlying pellets densify and a gap beneath the stuck pellet is formed. Gap measurements have been performed on modern irradiated AREVA fuel rods, and only very small gaps have been observed ($\leq$ 0.1 inch, Reference 5). The reported gap measurements were performed on fuel at cold temperature conditions. Since the fuel rod stack increases in length during heatup at a rate greater than the cladding (0.5 to 1 inch), the gaps are eliminated or reduced to less than 0.1 inch at power operation. Any remaining gaps during power operation will produce negligible power peaking effects. Therefore, no explicit penalty is included to account for densification spike effects.

The uncertainty factors described in this section are applicable to both the Advanced W17 HTP and Mark-BW fuel assembly designs. Appropriate uncertainty factors will be applied to other fuel assembly designs.

Operational Flexibility

This factor accommodates minor variations in fuel cycle operation relative to the design, and allows operational flexibility without requiring changes to the basic design (such as cycle length flexibility). It is determined by the fuel cycle designer on a cycle-by-cycle basis.

4.5.3.2.2.7 Experimental Verification of Power Distribution Analysis

4.5.3.2.2.8 Testing

Applicable information is contained in Section 4.3.2.2.8.

4.5.3.2.2.9 Monitoring Instrumentation

The AFD limits resulting from analysis of core power distributions relative to the initial condition peaking limits comprise a power-dependent envelope of acceptable AFD values. During steady-state operation, the core normally is controlled to a target AFD within a narrow (approximately ±5% AFD) band. However, the limiting AFD values may be somewhat greater than the extremes of the normal operating band.

Monitoring of control bank and axial flux difference is accomplished using the instrumentation described in section 4.3.2.2.9. Monitoring of core power peaking factors is performed at regular intervals defined by the Technical Specifications using the movable incore detector system.

4.5.3.2.3 Reactivity Coefficients

The reactivity coefficients discussed below are calculated on a cycle-specific basis and compared to reference bounding values specified in this FSAR. This comparison ensures that the cycle-specific values do not exceed the values used in the accident analysis for the plant.

4.5.3.2.3.1 Fuel Temperature (Doppler) Coefficient

The fuel temperature (Doppler) coefficient is defined as the change in reactivity per degree change in fuel temperature and is primarily a measure of the Doppler broadening of U-238 and Pu-240 resonance absorption peaks. Doppler broadening of other isotopes such as U-236, Np-237, etc is also considered but their contributions to the Doppler effect is small. An increase in fuel temperature increases the effective resonance absorption cross sections of the fuel and produces a corresponding reduction in reactivity.

The fuel temperature coefficient is calculated by performing two-group, three dimensional calculations. The moderator temperature distribution is held constant and the rated power level is varied: this produces a change in the fuel temperature distribution without changing the moderator temperature distribution. Spatial variation of fuel temperature is taken into account by calculating the fuel temperature as a function of power density.

4.5.3.2.3.2 Moderator Density and Temperature Coefficients

The moderator coefficient is calculated for various plant conditions by performing two group, three dimensional calculations, varying the moderator temperature (and density) by approximately $\pm 5^{o}F$ about each of the mean temperatures. The moderator temperature coefficient is calculated as a function of core temperature and boron concentration. The temperature range covered is from cold ($50^{o}F$) to HFP conditions.

4.5.3.2.3.3 Power Coefficient

The combined effect of moderator temperature and fuel temperature change as the core power level changes is called the total power coefficient and is expressed in terms of reactivity change per percent power. The power coefficient becomes more negative with burnup reflecting the combined effect of moderator and fuel temperature coefficients with burnup.

4.5.3.2.3.4 Comparison of Calculated and Experimental Reactivity Coefficients

Applicable information is contained in Section 4.2.3.4.

4.5.3.2.3.5 Reactivity Coefficients Used in Transients Analysis

Applicable information is contained in Section 4.2.3.5.

4.5.3.2.4 Control Requirements

Applicable information is contained in Section 4.3.2.4.

4.5.3.2.5 Control

Applicable information is contained in Section 4.3.2.5.

4.5.3.2.6 Control Rod Patterns and Reactivity Worth

Applicable information is contained in Section 4.3.2.6.

4.5.3.2.7 Criticality of Fuel Assemblies

Verification that appropriate shutdown criteria, including uncertainties, are met during refueling is achieved using standard AREVA reactor design methods. The subcriticality of the core during refueling is continuously monitored as described in Technical Specification 3.9.1.

A criticality safety analysis has been performed for fresh and spent fuel storage of Advanced W17 HTP and Mark-BW fuel assemblies, and the results showed the Advanced W17 HTP and Mark-BW fuel assemblies are neutronically equivalent to the Westinghouse Standard and Vantage 5H fuel assemblies. The comparison was based on the current U-235 enrichment limit of 5.0 wt% for the fresh and spent fuel storage racks. Therefore, the current limits are applicable to Advanced W17 HTP fuel and Mark-BW fuel. The reprocessed uranium LTAs are neutronically less reactive than the standard Advanced W17 HTP and Mark-BW fuel assemblies at the same U-235 enrichment, therefore, the current limits are also applicable to the LTAs.

4.5.3.2.8 Stability

4.5.3.2.8.1 Introduction

Applicable information is contained in Section 4.3.2.8.1.

4.5.3.2.8.2 Stability Index

Applicable information is contained in Section 4.3.2.8.2.

4.5.3.2.8.3 Prediction of the Core Stability

Prediction of the axial stability for a typical Sequoyah fuel cycle operating with AREVA fuel is verified on a cycle-specific basis by examination of the simulated xenon transients. The transient results indicate that induced xenon oscillations are self-damped near BOC, but may become unstable near MOC. The regulating rods are used to control any power oscillations such that fuel design limits are not violated. The addition of axial blanket fuel effectively shortens the core and increases core stability.

4.5.3.2.8.4 Stability Measurements

Applicable information is contained in Section 4.3.2.8.4

4.5.3.2.8.5 Comparisons of Calculations with Measurements

Applicable information is contained in Section 4.3.2.8.5.

4.5.3.2.8.6 Stability Control and Protection

Applicable information is contained in Section 4.3.2.8.6.

4.5.3.2.9 Vessel Irradiation

Applicable information is contained in Section 4.3.2.8.9

4.5.3.3 ANALYTICAL METHODS

The functions of the nuclear codes are to generate neutronics data and to calculate space-dependent nuclear parameters in order to license the fuel cycles. The approved design codes used by AREVA are CASMO3 (Reference 6) and NEMO (Reference 7). Sections 4.3.3.1 through 4.3.3.3 remain applicable for Westinghouse fuel and are not shown here. The following discussions cover the AREVA nuclear codes.

CASMO3

Neutron spectrum and few-group parameters are obtained from the CASMO3 code. CASMO3 computes burnup-dependent, spectrum-weighted few-group transport data for fuel lattices. A production library contains multigroup neutron cross section data for all materials of interest. The user inputs a physical and geometric description of the fuel assembly to CASMO3 and a case structure which will determine the depletion and restart cases.

CASMO3 also computes the multigroup two-dimensional neutron transport theory solution for a fuel assembly or a single fuel rod. A fundamental mode calculation is performed to account for leakage effects. Burnup-dependent calculations are performed over a wide range of reactor operating conditions. The output from CASMO3 is post-processed into a fuel cross section library and a fuel pin power library, both of which are used as input to the NEMO code.

NEMO

The cycle design and calculation of other physics parameters are performed with the NEMO code. The NEMO code was developed in a joint effort between AREVA and its predecessors. In NEMO, the nodal balance equation is solved in three dimensions to yield neutron flux, power, and reactivity. The nodal expansion method calculates nodal fluxes and currents. Discontinuity factors provide continuity of the heterogeneous fluxes at the node surfaces, and fuel discontinuities are treated by varying the axial node lengths. Fuel assembly rod powers are individually calculated via the pin power reconstruction method.

NEMO uses a two-group microscopic depletion model which accounts for over 20 different isotopes, including a special treatment for those isotopes which are not individually modeled.

Microscopic cross sections are interpolated against variables which include: burnup, boron concentration, moderator specific volume, and others. The major characteristics of the NEMO model include:

1. Three-dimensional, quarter-core or full-core geometry as needed.

2. Pin-by-pin power representation for each assembly.

3. Thermal-hydraulic feedback.

Pin power reconstruction is used to calculate fuel pin relative power densities in NEMO.

The CASMO3-NEMO code package was subjected to an extensive verification program that quantified uncertainties associated with the use of these codes (Reference 7).

4.5.3.4 REFERENCES

1. BAW-10163P-A, Core Operating Limits Methodology for Westinghouse Designed PWRs, June 1989.

2. EPRI Report NP3966-CCM, CEFA Method of Analyzing Creep Collapse of Oval Cladding, Volume 5: Evaluation of Interpellet Gap Formation and Clad Collapse in Modern PWR Fuel Rods, Combustion Engineering, Inc., April 1985.

3. BAW-10147P-A, Rev. 1, Fuel Rod Bowing in Babcock & Wilcox Fuel Designs, May 1983.

4. BAW-10054P, Rev. 2, Fuel Densification Report, May 1973.

5. Letter, D.M. Crutchfield to James H. Taylor, Acceptance for Referencing of a Special Licensing Report, December 5, 1986.

6. M. Edenius, et al., CASMO-3 -- A Fuel Assembly Burnup Program, STUDSVIK/NFA-89/3, Studsvik AB, Nykoping, Sweden, November 1989.

7. BAW-10180-A, Rev. 1, NEMO - Nodal Expansion Method Optimized, Revision 1, March 1993.

4.5.4 THERMAL AND HYDRAULIC DESIGN

4.5.4.1 DESIGN BASES

Section 4.4.1 defines the performance and safety criteria that are the basis of thermal and hydraulic core design. Sections 4.4.1.1 through 4.4.1.5 establish a number of design bases that ensure that those criteria are met. The following section describes how AREVA has addressed these design bases in licensing Mark-BW and Advanced W17 HTP fuel for Tennessee Valley Authority's Sequoyah Plant.

4.5.4.1.1 Departure from Nucleate Boiling (DNB) Design Bases

Basis:

There will be at least a 95-percent probability that DNB will not occur on the limiting fuel rods during normal operation and operational transients and any transient conditions arising from faults of moderate frequency (Condition I and II events) at a 95-percent confidence level. Historically, this criterion has been conservatively met by adhering to the following thermal design basis: there must be at least a 95-percent probability that the minimum departure from nucleate boiling ratio (DNBR) of the limiting power rod during Condition I and II events is greater than or equal to the DNBR limit of the DNB correlation being used. The DNBR limit for the correlation is established based on the variance of the correlation such that there is a 95-percent probability with 95-percent confidence that DNB will not occur when the calculated DNBR is at the DNBR limit.

Discussion:

For the SQN licensing analyses, AREVA has implemented a thermal-hydraulic analysis method referred to as the Statistical Core Design (SCD) method. SCD is an approved methodology that has been documented in BAW-10170P-A (Reference 1). The CHF correlation that has been implemented is the BWCMV correlation documented in BAW-10159P-A (Reference 2) and the BHTP correlation documented in BAW-10241P-A (Reference 22). BWCMV was specifically developed for mixing vane fuel designs and is applicable to the Mark-BW fuel in a full-core of Mark-BW fuel and in a transition cycle where both Mark-BW and Advanced W17 HTP fuel is present. In addition, in BAW-10189P-A (Reference 3), AREVA presented additional test data that showed that the Mark-BW Zircaloy-4 mixing grid performed at a level that was superior to the original data base. This enhanced CHF performance of the Mark-BW mixing grid is incorporated into the thermal-hydraulic analysis through the use of design-specific equivalent grid spacing. When using the BWCMV correlation in this manner, referenced specifically to BAW-10189P, it is referred to as BWCMV-A. BHTP was specifically developed for non-mixing vane fuel designs and is applicable to the Advanced W17 HTP fuel in a full core of advanced W17 HTP fuel and in a transition cycle where other fuel is present.

In their standard application, BWCMV/BWCMV-A and BHTP DNBR design limits of 1.21 and 1.132, respectively, ensure that the 95/95 DNBR design basis is met for each fuel type. Under that application, all uncertainties in the thermal-hydraulic analysis input parameters are assumed to be at their worst case level. With the SCD method, uncertainties in the operating conditions, the peaking distribution and the fuel fabrication process are combined statistically and a statistical design limit (SDL) is determined. For the Sequoyah application, an SDL value of 1.345 has been established for the Mark-BW fuel and an SDL value of 1.363 has been established for the Advanced W17 HTP fuel. To provide an extra measure of flexibility in the core design process a third design limit is also established. That design limit, the thermal design limit (TDL), includes a provision for retained thermal margin. This retained thermal margin is included to offset conditions that are not included in the SDL development. Examples of offsets that might be assessed against the retained margin include transition core effects and penalties for input uncertainties greater than those considered in the SDL development.

For Mark-BW fuel, the SCD method and the BWCMV-A CHF correlation have been used to calculate reactor core safety limits and to evaluate transients. For Advanced W17 HTP fuel, the SCD method and the BHTP CHF correlation have been used to calculate reactor core safety limits and to evaluate transients. Transient analyses are discussed in Chapter 15.

4.5.4.1.2 Fuel Temperature Design Basis

Basis:

During modes of operation associated with Condition I and Condition II events, the maximum fuel temperature for the UO_2 fuel rods shall be less than the melting temperature of UO_2 and the maximum fuel temperature for the UO_2-Gd_2O_3 fuel rods shall be less than the melting temperature of UO_2-Gd_2O_3.

Discussion:

To determine the linear heat rates at which fuel melting occurs, AREVA employs the fuel thermal analysis codes; TACO3 for the UO_2 only rods and GDTACO for the UO_2-Gd_2O_3 rods. TACO3 is documented in BAW-10162P-A (Reference 4); GDTACO is documented in BAW-10184P-A (Reference 5). Starting with Unit 1 Cycle 20 and Unit 2 Cycle 19, the COPERNIC fuel performance code (Reference 20) will be utilized to predict the centerline fuel melt limits. The COPERNIC computer code (Reference 20) is the fuel performance code approved for fuel rod design and analysis of slightly enriched uranium dioxide fuels and urania-gadolinia fuels with the advanced cladding material M5®. For all codes, conservatism is incorporated in the analysis by reducing the best-estimate fuel melt temperature to account for the uncertainties. By precluding fuel melting, the fuel geometry is preserved and possible adverse effects of molten fuel on the cladding are eliminated. To preclude center melting and as a basis for overpower protection system setpoints, the respective UO_2 and UO_2-Gd_2O_3 fuel melt temperatures have been selected as the basis for setting the overpower limit.

4.5.4.1.3 Core Flow Design Basis

See Section 4.4.1.3

4.5.4.1.4 Hydrodynamic Stability Design Basis

No change to this entire section. See Sections 4.4.1.4, 4.4.3.5 and 4.5.4.3.5.

4.5.4.1.5 Other Considerations

Discussion:

As discussed in Section 4.4.1.5, the design bases defined above, along with those defined in Sections 4.2.1 and 4.5.2.1, are sufficiently comprehensive so that additional limits are not required.

However, there are additional conservatisms that are incorporated into the design methodologies that ensure plant safety. These include, but are not limited to, the treatment of the inlet flow distribution in the inputs to the core thermal-hydraulic (LYNXT) evaluation and the application of a clad temperature limit on those transients that experience a departure from nucleate boiling (i.e. the Loss-of-Coolant Accident [LOCA], the control rod ejection, and the locked rotor accident).

4.5.4.2 DESCRIPTION OF THERMAL AND HYDRAULIC DESIGN OF THE REACTOR CORE

4.5.4.2.1 Summary Comparison

Table 4.5.4.2-1 provides a listing of reactor design parameters applicable with Framatome ANP's Mark-BW 17x17 fuel design and the Statistical Core Design (SCD) methodology. Table 4.5.4.2-1 also provides a listing of reactor design parameters applicable with AREVA's Advanced W17 HTP 17 x 17 fuel design and the SCD methodology. On that table, the SCD parameters are compared to those that have been previously applied for the Westinghouse fuel and design methodologies.

4.5.4.2.2 Fuel and Cladding Temperatures (Including Densification)

As specified in Section 4.5.4.1.2, during Condition I and Condition II events, the maximum fuel temperature is required to be less than the fuel melting temperature. To verify that this criterion is met, AREVA uses the fuel thermal analysis codes TACO3 (for UO_2 rods) and GDTACO (for UO_2-Gd_2O_3 rods). TACO3 is documented in BAW-10162P-A (Reference 4); GDTACO is documented in BAW-10184P-A (Reference 5). Starting with Unit 1 Cycle 20 and Unit 2 Cycle 19, the COPERNIC fuel performance code (Reference 20) will be utilized to predict the fuel temperature for M5® rods. As discussed in these reports, and summarized in Section 4.5.4.1.2, the codes reduce the best-estimate fuel melt temperatures to account for uncertainties in fuel fabrication data and in the code predictions. Time dependent densification effects are considered by all fuel performance codes.

The principal factors that are employed in the fuel performance codes to calculate fuel temperatures are discussed below.

4.5.4.2.2.1 Thermal Conductivity

In both TACO3 and GDTACO, quasi-cubic Hermite splines are used to model the temperature dependence of the thermal conductivity. The modified Loeb correlation has been selected to compensate for the unrestructured porosity effects. For the UO_2 rods, expressions for both the thermal conductivity and the porosity factor are contained in Appendix C of BAW-10162P-A (Reference 4). Sections 2.1.1 and 2.1.2 of BAW-10184P-A (Reference 5) provide a complete discussion of the method used to derive the thermal conductivity for the UO_2-Gd_2O_3 rods.

The COPERNIC fuel thermal conductivity model considers the effect from burnup degradation and radiation damage. Hence, the COPERNIC code explicitly models degradation of fuel thermal conductivity resulting from burnup, and does not require any correction to the analysis results in order to account for fuel thermal conductivity degradation. The fuel thermal conductivity is also corrected by a temperature-dependent porosity factor. Section 4.3 of BAW-10231P-A (Reference 20) provides a detailed discussion of thermal conductivity model used in COPERNIC.

4.5.4.2.2.2 Radial Power Distribution in Fuel Rods

Fuel pin radial power profiles for UO_2 fuel pellets were calculated using the PEEL/NULIF neutronics codes (References 15 and 16). Data was generated for the following range of conditions:

Density, %TD:	90 to 98
Enrichment, $\%U^{235}$:	0.71 to 9
Pellet OD, in:	0.30 to 0.50
Burnup, MWd/mtU:	0 to 75,000

To determine the pellet radial power at a specific point, TACO3 uses a table-look-up using the data generated over these ranges. A complete discussion of the methods used to determine the radial power profiles used in TACO3 is contained in Appendix E of BAW-10162P-A (Reference 4).

For the UO_2-Gd_2O_3 rods, fuel pin radial power profiles are generated using a stand alone code called MICBURN, with output from MICBURN feeding directly into GDTACO. By modeling the radial effects of the gadolinia burnout, MICBURN is able to accurately predict the radial power distribution in the UO_2-Gd_2O_3 rods. A complete discussion of the use of MICBURN for radial power profile generation is provided in Section 2.1.3 of BAW-10184P-A (Reference 5).

Fully discussed in Section 4.5 of BAW-10231P-A (Reference 20), the fuel pellet radial power profiles were determined separately with a neutronic transport code and the produced tabulated data were incorporated in COPERNIC. The generic tables for UO_2 were established to cover the range of conditions commonly used in the reactors. For the UO_2-Gd_2O_3 fuel, the fuel radial power profile tables are generated by MICBURN and entered by the user.

4.5.4.2.2.3 Gap Conductance

The gap conductance model used in TACO3, GDTACO and COPERNIC is made up of three components, open-gap conductance (gas conduction and transport), solid-solid (contact conductance), and radiation heat transfer. A complete discussion of the gap conductance models used in TACO3 is contained in Appendix D of BAW-10162P-A (Reference 4). The gap conductance models used in GDTACO are identical to those used in TACO3. The gap conductance models used in COPERNIC are provided in Section 4.2 of BAW-10231P-A (Reference 20).

4.5.4.2.2.4 Surface Heat Transfer Coefficients

The fuel rod surface heat transfer coefficients used during subcooled forced convection and nucleate boiling are presented in Sections 4.4.2.8.1 and 4.5.4.2.8.1.

4.5.4.2.2.5 Fuel Clad Temperatures

Applicable information is contained in Section 4.4.2.2.5.

4.5.4.2.2.6 Treatment of Peaking Factors

For AREVA thermal-hydraulic analyses for the Mark-BW and Advanced W17 HTP fuel, the value of the total heat flux hot channel factor, F_Q, and the enthalpy rise hot channel factor, $F_{\Delta H}(x,y)$, have been set at 2.50 and 1.64, respectively. (Subparagraph 15.4.1.1.7 discusses the F_Q value used in LOCA.

The radial peak of 1.64 corresponds to a maximum allowable radial peak of 1.70 when a 4% total rod power uncertainty factor is included.) Applying these factors to a design power level of 3455 MWt results in a peak local power of 13.8 kW/ft. In addition, the AREVA fuel melt limit methodology (outlined in Section 4.5.4.1.2) has shown that the peak linear power for prevention of centerline for melt for Mark-BW fuel is greater than 21.9 kW/ft for UO_2 rods and greater than 19.4 kW/ft for UO_2-Gd_2O_3 rods (see Table 4.5.4.2-1). For Advanced W17 HTP fuel, the AREVA fuel melt limit methodology (outlined in Section 4.5.4.1.2) has shown that the peak linear power for prevention of centerline fuel melt is greater than 20.05 kW/ft for UO_2 rods and greater than 18.95 kW/ft for UO_2-Gd_2O_3 rods (see Table 4.5.4.2-1).

4.5.4.2.3 Critical Heat Flux Ratio or DNBR and Mixing Technology

The minimum DNBR values for the nominal operating condition and for the design transient condition are given on Table 4.5.4.2-1. For this application, the DNBR for Mark-BW fuel values are calculated using the BWCMV-A CHF correlation and DNBR values for Advanced W17 HTP fuel are calculated using the BHTP CHF correlation. A complete discussion of the development of BWCMV-A is included in BAW-10159P-A (Reference 2) and BAW-10189P-A (Reference 3). A complete discussion of the development of BHTP is included in BAW-10241P-A (Reference 22).

4.5.4.2.3.1 Departure from Nucleate Boiling Technology

Over the years experimental studies of DNB have progressed from crude single channel configurations to more realistic rod bundle arrays. As the technology developed, it was discovered that correlations based on local subchannel conditions were more accurate predictors of critical heat flux (CHF) than were correlations based on bundle average values. To meet this need for the prediction of local subchannel conditions, AREVA has developed the LYNXT thermal-hydraulic analysis code. LYNXT determines core conditions by solving a set of conservation equations for mass, momentum, and energy. LYNXT provides a one-pass analysis by dividing the core into discrete subchannels and axial control volumes. The subchannel conditions generated by this code provide the basis for the determination of CHF.

AREVA's BWCMV CHF correlation, is for mixing vane fuel designs and is applicable to Mark-BW fuel. BWCMV was developed from a data base that consists of 1418 points from 26 separate test sections. Included in the test sections were six non-uniform axial flux shapes, six hydraulic diameters, three heated lengths, six spacer grid spacings, two fuel pin sizes, both the guide tube and unit cell geometries and three different mixing vane grid designs. By correlating to this large data base, BWCMV has been demonstrated to apply to a number of different fuel designs, including the Westinghouse 15x15 fuel assemblies (both L-grid and R-grid), Westinghouse 17x17 fuel assemblies (standard, Vantage 5H, and OFA) and all Framatome designed replacement assemblies.

The applicable range of variables for BWCMV is as follows:

Pressure (psia)	1485 to 2455
Mass Velocity (10^6 lbm/hr-ft^2)	0.95 to 3.75
Thermodynamic Quality (%)	-22 to 22
Hydraulic Diameter (inches)	0.3747 to 0.5335
Heated Length (inches)	96 to 168
Spacer Grid Spacing (inches)	13 to 32

In August 1993, Framatome submitted additional test data (BAW-10189P-A) that showed that the Mark-BW Zircaloy-4 mixing grid performed at a level that was superior to the original data base. This enhanced CHF performance of the Mark-BW mixing grid is incorporated into the thermal-hydraulic analysis through the use of design-specific equivalent grid spacing. When using the BWCMV correlation in this manner, referenced specifically to BAW-10189P-A, it is referred to as BWCMV-A.

The applicable range of variables for the application of BWCMV-A to the Mark-BW spacer grid is as follows:

Pressure (psia)	1475 to 2465
Mass Velocity (10^6 lbm/hr-ft^2)	0.87 to 3.55
Thermodynamic Quality (%)	Less than 27
Hydraulic Diameter (inches)	0.3747 to 0.4637

Using the one-sided tolerance theory from Owen, it was determined that for both BWCMV and BWCMV-A a correlation limit of 1.21 would provide assurance that there is at least a 95% probability at the 95% confidence level that a departure from nucleate boiling will not occur.

When conditions for a particular analysis (for example, steam line break) fall outside the applicable range of BWCMV and BWCMV-A, Framatome employs additional NRC-approved CHF correlations that bound the required range of conditions. The additional correlations may include, but are not limited to, W-3 (Reference 17), BWU (Reference 18), and Biasi (Reference 23).

AREVA's BHTP correlation is for non-mixing vane designs and is applicable to the Advanced W17 HTP fuel. BHTP was developed from a data base that is described in BAW-10241P-A (Reference 22).

The applicable range of variables for BHTP is as follows:

Pressure (psia) 1385 to 2425

Mass Velocity (10^6 lbm/hr-ft^2) 0.492 to 3.549

Thermodynamic Quality (%) (no lower limit) to .512

Hydraulic Diameter (inches) 0.4517 to 0.5334

Heated Length (inches) 117.6 to 168

Axial Spacer Span (inches) 10.5 to 26.2

Using the distribution-free method from Sommerville, it was determined that for BHTP a correlation limit of 1.132 would provide assurance that there is at least a 95% probability at the 95% confidence level that a departure from nucleate boiling will not occur.

When conditions for a particular analysis (for example, steam line break) fall outside the applicable range of BHTP, AREVA employs additional NRC-approved CHF correlations that bound the required range of conditions. The additional correlations may include, but are not limited to, W-3 (Reference 17) and BWU (Reference 18).

4.5.4.2.3.2 Definition of Departure from Nucleate Boiling Ratio

BWCMV is based on a form that uses local subchannel conditions with modifiers to account for nonuniform axial heat generation and bundle global conditions, and with a bundle-specific multiplier to account for the effects of grid spacing and heated length. Based on that form, DNBR is calculated with BWCMV as follows:

$$DNBR = q_u / q_{oc}$$

where

q_u = FLS q / ^oF

q_{oc} = local surface heat flux (BTU/hr-ft^2)

and

q_u = Nonuniform CHF (BTU/hr-ft^2)

FLS = Bundle multiplier for length and grid spacing

q_u = Uniform CHF (BTU/hr-ft^2)

F = Nonuniform modifier on q_u

This same form also applies to BWCMV-A, however, in that application an equivalent grid spacing is used in the calculation of the FLS term which results in a higher critical heat flux value.

BHTP is based on a form that uses local subchannel conditions to calculate the heat flux that would cause DNB. The method used to calculate that value is described in BAW-10241P-A (Reference 22). Based on tht, DNBR is calculated with BHTP as follows:

$$DNBR = q_{dnb} / q_{loc}$$

Where

q_{dnb} = the heat flux that would cause DNB, calculated by the BHTP correlation (BTU/hr-ft^2)

q_{loc} = local surface heat flux (BTU/hr-ft^2)

4.5.4.2.3.3 Mixing Technology

Based on analysis of Laser Doppler Velocimeter testing of the Mark-BW Zircaloy-4 spacer grid, a turbulent mixing coefficient of 0.062 was determined to be applicable to the Mark-BW fuel design. The test, performed by Nuclear Fuel Industries (NFI) of Japan, provided an indication of the turbulent intensity at various distances downstream of the spacer grids. Research has shown that the turbulent mixing coefficient is proportional to the turbulent intensity. Although a value of 0.062 was calculated for the Mark-BW geometry, a conservative value of 0.038 is applied in thermal-hydraulic analyses.

The mixing coefficient applicable to the Advanced W17 HTP fuel assembly is calculated based on test data in Appendix A of ANF-1224P-A (Reference 21).

4.5.4.2.3.4 Hot Channel Factors

Engineering hot channel factors (HCF's) are used to account for the effects of manufacturing variations on the maximum linear heat generation rate and enthalpy rise.

Local Heat Flux Engineering Hot Channel Factor:

The local heat flux engineering hot channel factor, F^E_Q, is used in the evaluation of the maximum linear heat generation rate. This factor is determined by statistically combining manufacturing variances for pellet enrichment and weight and typically has a value of 1.03 or less at the 95% probability level with 95% confidence. It has been shown that relatively small heat flux spikes, such as those represented by F^E_Q, have no effect on DNB, therefore this factor is not used in DNBR calculations.

Average Pin Power Engineering Hot Channel Factor:

The average pin power factor, $F^E_{\Delta H}$, accounts for the effects of variations in fuel stack weight, enrichment, fuel rod diameter, and pin pitch on hot pin average power. This factor, which typically has a value of 1.03 or less, is combined statistically with other uncertainties to establish the statistical design limit (SDL) DNBR used with the statistical core design method.

Since $F^E_{\Delta H}$ is incorporated into the statistical design limit (SDL), this factor is not included in the LYNXT model used for SCD analyses. For non-SCD analyses, $F^E_{\Delta H}$ is incorporated into the LYNXT model as a multiplier on the hot pin average power.

4.5.4.2.3.5 Effects of Rod Bow on DNBR

The bowing of fuel rods during reactor operation has the potential to affect both local power peaking and the margin to DNB. As discussed in Section 4.1.1.7 of BAW-10172P (Reference 7), the Mark-BW fuel design has several features that make its fuel rod bow performance similar to that of other AREVA fuel designs. In BAW-10186P-A, Rev. 1 (Reference 14), Framatome (AREVA) presented new data that extended the rod bow data base for Framatome (AREVA) fuel to 58,300 MWd/mtU. That topical concluded that the rod bow correlations from BAW-10147PA-R1 (Reference 13) are applicable at extended burnups and apply to the Mark-BW.

Since the fuel rods used in the Advanced W17 HTP fuel assemblies are hydraulically identical to those used in Mark-BW fuel (within the heated length), and because the fuel rod and assembly pitches are identical between the two fuel types, conclusions regarding the rod bow penalties for Mark-BW fuel are applicable to the Advanced W17 HTP fuel as well.

In most cases, no DNBR penalty due to rod bowing is applied to the Advanced W17 HTP or Mark-BW fuel, since predicted bow magnitudes are insufficient to cause a DNBR penalty greater than 1% in fuel with burnup values less than 24,000 MWd/mtU, and fuel with higher burnup does not produce sufficient power to attain design peaking factors. The 1% penalty is accounted for by the pin pitch reduction allowance that is incorporated into the engineering hot channel factor on hot pin average power, discussed in Section 4.5.4.2.3.4.

In cases where the predicted rod bow magnitudes are sufficient to cause a DNBR penalty greater than 1%, an augmentation factor is applied to the peaking values used to calculate margin to DNB. This penalty is calculated using the method outlined in Section 6.1.1 of BAW-10147PA-R1 (Reference 13).

4.5.4.2.4 Flux Tilt Considerations

The description of flux tilt considerations provided in Section 4.4.2.4 remains applicable for the Mark-BW Fuel and for the transition to the Advanced W17 HTP fuel design.

4.5.4.2.5 Void Fraction Distribution

The void models that are employed in the AREVA thermal-hydraulic analysis are described in the LYNXT topical report (BAW-10156-A, Rev. 1 -- Reference 6).

4.5.4.2.6 Core Coolant Flow Distribution

Assembly average coolant mass velocity and enthalpy at various radial and axial core locations were calculated for both a-full Mark-BW core and a full Advanced W17 HTP core. Coolant enthalpy rise and flow distributions for the 4-ft elevation (1/3 of core height), 8-ft elevation (2/3 core height), and core exit are shown in Figures 4.5.4.2-7, 4.5.4.2-8, and 4.5.4.2-9, respectively. These distributions are for the full power conditions used in AREVA's SCD analysis, as given in Table 4.5.4.2-1, and for a typical radial power density distribution near the beginning of life. The LYNXT code analysis for this case utilized a uniform core inlet enthalpy and inlet flow distribution.

4.5.4.2.7 Core Pressure Drops and Hydraulic Loads

4.5.4.2.7.1 Core Pressure Drop

The pressure drops presented in Table 4.5.4.2-1 for the Mark-BW and Advanced W17 HTP fuel assemblies are based on the best estimate flow for actual plant operating conditions as described in Section 5.1. The pressure drop characteristics of the Mark-BW and Advanced W17 HTP designs were determined through a series of prototype flow tests. Results from those tests were used as the basis for the calculation of component formloss coefficients.

The pressure drops presented in Table 4.5.4.2-1 are for full-cores of Mark-BW and Advanced W17 HTP fuel.

4.5.4.2.7.2 Hydraulic Loads

The holddown spring system is designed to maintain fuel assembly contact with the lower support plate during Condition I and II events except for the pump overspeed transient. The fuel assembly top and bottom nozzles will maintain engagement with the reactor internals for all Condition I through IV events. Hydraulic loss characteristics of the Mark-BW and Advanced W17 HTP designs were determined as part of the prototype testing described in Section 4.5.4.2.7.1. An analysis of the predicted Mark-BW and Advanced W17 HTP lift forces, which are based on the mechanical design flow and the minimum bypass, indicates that the assemblies will not lift off under any normal operating condition. At the 120% pump overspeed condition, the Mark-BW fuel assembly will experience some lift-off, but the lift-off will not compress the fuel assembly holddown spring to its solid height, nor will it cause plastic deformation in the spring.

4.5.4.2.8 Correlation and Physical Data

4.5.4.2.8.1 Surface Heat Transfer Coefficients

The correlations that are used in the AREVA analyses to determine the forced convection heat transfer coefficient and to determine the onset of nucleate boiling are the same as those described in Section 4.4.2.8.1. A more complete discussion of the models that are available in the AREVA thermal-hydraulic analysis code can be found in the LYNXT topical report, BAW-10156-A, Rev. 1 (Reference 6).

4.5.4.2.8.2 Total Core and Vessel Pressure Drop

Section 4.4.2.8.2 provides a description of the models that are used to determine vessel and core pressure drop. To determine the mixed core pressure drop, these models are applied to each unique fuel design in the core and to mixed cores with various loading patterns. Assessments of core pressure drop are performed using the LYNXT thermal-hydraulics code. These assessments have shown that small differences in total assembly pressure drop have a negligible impact on the total vessel pressure drop. The pressure drop changes associated with hardware upgrades for the Mark-BW and Advanced W17 HTP product are factored into the core pressure drop predictions and are addressed during transition core analyses.

4.5.4.2.8.3 Void Fraction Correlation

Figure 4.4.2-10 illustrates the three separate void regions that are considered in flow boiling in a PWR. The AREVA thermal-hydraulic analysis code, LYNXT, uses a number of different models and correlations to represent these three regions. A discussion of the various models and correlations is contained in Appendix B of the LYNXT topical report, BAW-10156-A, Rev. 1 (Reference 6).

4.5.4.2.9 Thermal Effects of Operational Transients

Section 4.4.2.8 briefly describes the core protection system that is employed to ensure that the minimum DNBR in the core is not less than the design limit DNBR. The implementation of AREVA Mark-BW and Advanced W17 HTP fuel does not alter the function of this system nor the basis for setpoint calculation. In general, previously defined core protection setpoints have been maintained with the licensing analyses merely verifying their applicability.

4.5.4.2.10 Uncertainties in Estimates

4.5.4.2.10.1 Uncertainties in Fuel and Clad Temperatures

As stated in Section 4.4.2.10.1, uncertainties in fuel temperature calculations can be defined in two categories: fabrication uncertainties and model uncertainties. In the methodology that has been established for use with the TACO3, GDTACO and COPERNIC thermal analysis codes, both of these areas have been addressed. For fuel temperature calculations, all inputs are treated at their nominal level and the resulting temperatures are treated as best estimate values. However, for specific applications (e.g. fuel centerline melt analyses and internal pin pressure calculations), uncertainties in these parameters are factored into the calculation. For the centerline melt analysis, this method results in a statistically reduced fuel melt temperature. For the internal pin pressure analysis, this method generates a bounding pin pressure that accounts for the discussed uncertainties.

4.5.4.2.10.2 Uncertainties in Pressure Drop

The core pressure drop reported on Table 4.5.4.2-1 for the Mark-BW and Advanced W17 HTP fuel designs are based on the best estimate flow and are regarded as a best estimate number. Uncertainties in the pressure drop analysis are treated implicitly and are not included as an uncertainty on the final pressure drop value.

4.5.4.2.10.3 Uncertainties Due to Inlet Flow Maldistribution

The implementation of the Mark-BW and/or Advanced W17 HTP fuel does not affect the uncertainties that are treated in the inlet flow maldistribution factor. Therefore, the discussion contained in Section 4.4.2.10.3 remains applicable.

4.5.4.2.10.4 Uncertainty in DNB Correlation

The uncertainty in the BWCMV/BWCMV-A CHF correlation has been treated in the determination of the correlation design limit and as part of the statistical core design methodology for Mark-BW fuel. The uncertainty in the BHTP CHF correlation has been treated in the determination of the correlation design limit and as part of the statistical core design methodology for Advanced W17 HTP fuel.

4.5.4.2.10.5 Uncertainties in DNBR Calculations

A code uncertainty of 5 percent is included in the statistical core design methodology to account for uncertainties in the DNBR calculations.

4.5.4.2.10.6 Uncertainties in Flow Rates

For thermal performance evaluations, a thermal design flow rate which conservatively bounds the best estimate flow rate, as stated in Section 5.1, is used. In addition, 9.0* percent of thermal design flow is assumed to bypass the core and is therefore ineffective for heat transfer. A flow measurement uncertainty is included in the SDL.

4.5.4.2.10.7 Uncertainties in Hydraulic Loads

For hydraulic lift evaluations, a mechanical design flow rate which conservatively bounds the best estimate flow rate is used. In addition, the core bypass flow is assumed to be a minimum, thereby increasing the lift forces in the core.

Starting with the Unit 1 Cycle 15 reload core, NRC approved probabilistic methods are used to treat some of the uncertainties in the fuel assembly hold down analysis. This methodology, known as statistical fuel assembly hold down methodology, is described in BAW-10243P-A (Reference 19). The methodology provides 95 percent protection at the 95% confidence level that each fuel assembly has adequate hold down protection when the net hold down force is predicted to be zero. The analysis technique is applicable to full cores containing the same fuel design as well as for transition cores where multiple fuel designs are co-resident. For the mixed or transition core, when multiple fuel designs co-reside in the core, the net hold down force determination is addressed for each specific fuel design.

4.5.4.2.10.8 Uncertainty in Mixing Coefficient

Based on an analysis of Laser Doppler Velocimeter testing of the Mark-BW Zircaloy-4 spacer grid, a turbulent mixing coefficient of 0.062 was determined to be applicable to the Mark-BW fuel design. However, a conservative value of 0.038 is used in the thermal-hydraulic analyses.

The mixing coefficient applicable to the Advanced W17 HTP fuel assembly is calculated based on test data in Appendix A of ANF-1224P-A (Reference 21).

4.5.4.2.11 Plant Configuration Data

The discussion of the Sequoyah Plant Configuration provided in Section 4.4.2.11 remains applicable for the transition to the Mark-BW fuel design. It also remains applicable for the transition to the Advanced W17 HTP fuel design.

4.5.4.3 EVALUATION

The thermal-hydraulic methods that AREVA has used to license Mark-BW and Advanced W17 HTP fuel for operation in the Sequoyah Plant are outlined in BAW-10220P (Reference 12). The following sections briefly describe some of those methods.

4.5.4.3.1 Core Hydraulics

4.5.4.3.1.1 Flow Paths Considered in Core Pressure Drop and Thermal Design

Section 4.4.3.1.1 provides a description of the flow paths considered when determining the nominal core bypass flow. That discussion remains applicable for the Mark-BW fuel design and the transition to the Advanced W17 HTP fuel design.

---

* The maximum bypass flow has increased to 9.1%. This is applicable to Units 1 and 2, with or without the H-8 control rod assembly.

4.5.4.3.1.2 Inlet Flow Distributions

Thermal-hydraulic analyses impose a 5-percent reduction in inlet flow to the hot assembly.

4.5.4.3.1.3 Empirical Friction Factor Correlations

The AREVA thermal-hydraulic analysis code, LYNXT, uses the Framatome (AREVA) single-phase friction factor model with multipliers for the subcooled and two-phase flow regimes. A description of this model is contained in Appendix B of the LYNXT topical report, BAW-10156-A, Rev. 1 (Reference 6). LYNXT also has a variable lateral resistance model in which the crossflow resistance coefficient varies with the pitch to diameter ratio and Reynolds number.

4.5.4.3.2 Influence of Power Distribution

Section 4.4.3.2 provides a discussion of the Westinghouse method for defining the core power distribution through the use of the nuclear enthalpy rise hot channel factor, $F_H(x,y)$, and the axial power distribution. The following two sections discuss how AREVA has implemented these two parameters in its analyses for the Sequoyah plant.

4.5.4.3.2.1 Nuclear Enthalpy Rise Hot Channel Factor

Section 4.4.3.2.1 defines the nuclear enthalpy rise hot channel factor as the ratio of the hot rod total power to the average rod total power. This definition is applicable for both the Westinghouse methodology and the AREVA methodology. AREVA has utilized a design $F_{\Delta H}(x,y)$ value of 1.64 in its thermal-hydraulic analysis. To determine a design core power distribution, a real power distribution is generated with a core depletion code, like NEMO, and the power in the hot bundle is adjusted so that the hot pin is at the design $F_{\Delta H}(x,y)$ value. A conservative flux shape is imposed across the core uniformly. For operation at power levels less than 100 percent full power, the design peak is adjusted according to the following relationship:

$$F_{\Delta H}(x,y) = 1.64\ [1 + 0.3(1 - P)]$$

where

P = the fraction of rated power

This permitted relaxation allows greater flexibility in the nuclear design. An $F_H(x,y)$ measurement uncertainty is included in the Statistical Design Limit. The radial peak of 1.64 corresponds to a maximum allowable radial peak of 1.70 when a 4% total rod power uncertainty factor is included.

For transients which trip on the plant's OTΔT trip, a design peak which is a function of core power must be used. This is a result of the implementation of the core safety limit lines as described in Section 15.1.3. The variable design peak to be used for these transients is given in Figure 15.1.3-2.

4.5.4.3.2.2 Axial Heat Flux Distributions

As discussed in Section 4.4.3.2.2, the axial heat flux distribution can vary as a result of rod motion, power change, or due to a spatial xenon transient which may occur in the axial direction. For its thermal-hydraulic design calculations, AREVA has assumed a chopped cosine axial distribution with a peak to average value of 1.55. As stated in Section 4.4.3.2.2, the core protection system provides an automatic reduction in the trip setpoints for conditions in which

the measured axial offset differs from the design value. AREVA determines the magnitude of this axial offset correction by investigating a wide range of both inlet and outlet skewed flux shapes and verifying that the actual DNB margin is greater than or equal to that which is available with the design shape. This process is done for both steady-state operating conditions and for transient initialization conditions.

4.5.4.3.3 Core Thermal Response

A general summary of steady-state thermal-hydraulic design parameters applicable with AREVA's Mark-BW 17x17 and Advanced W17 HTP fuel designs and the Statistical Core Design (SCD) methodology is provided in Table 4.5.4.2-1 for all loops in operation. On that table, the SCD parameters are compared to those that have been previously applied for the Westinghouse fuel and design methodologies.

4.5.4.3.4 Analytical Techniques

4.5.4.3.4.1 Core Analysis

To perform the various thermal-hydraulic analyses needed to license the Mark-BW and Advanced W17 HTP designs, AREVA typically employs its LYNXT thermal-hydraulic analysis code. LYNXT, a single-pass code, evaluates subchannel thermal-hydraulic conditions for both steady-state and transient modes of operation using crossflow methodologies to determine core conditions. A more complete description of the code is provided in the following paragraph and in topical report BAW-10156A Rev. 01 (Reference 6). Comparisons of code predictions to experimental data are contained in the topical report.

LYNXT

LYNXT is approved by the NRC and provides the capability for single-pass core thermal-hydraulic analysis for both steady state and transient conditions. It also has the capability to analyze conditions with high lateral flow and/or recirculating flow, such as encountered in the analysis of a steamline break with reactor coolant pumps off. The single pass LYNXT model has been extensively benchmarked to multi-pass analyses and appropriate experimental data. LYNXT is used almost exclusively for determining core flow redistribution and for predicting the DNB performance of various fuel designs.

LYNXT has been qualified for the BHTP, BWC, BWCMV, BWCMV-A, BWU B&W2, Biasi and W3 correlations by data base analysis. In each case, where this evaluation has been performed, LYNXT supported the licensed DNBR limit for the respective CHF correlation. Some of the features of LYNXT include:

1. Reverse/recirculating flow option
2. RELAP5-type "strip" option
3. Exit pressure profile boundary condition and transient pressure drop boundary condition
4. Generalized DNBR subroutine
5. Internal code generation of the axial power shape
6. Transient radial and axial power shapes input capability
7. Dynamic gap conductance fuel model patterned after TACO2
8. Transient DNBR summary table and steady-state/time step most limiting and second most limiting axial DNBR distributions
9. Restart option
10. ANSI Fortran 77
11. Enhancements to the conducting wall model to allow rectangular and cylindrical walls
12. User enhancements that minimize the user efforts to set up, run, and understand the code predictions.

4.5.4.3.4.2 Fuel Temperatures

As discussed in Section 4.5.4.2.2, AREVA employs the fuel thermal performance codes TACO3, GDTACO, and COPERNIC to predict fuel rod temperature and internal pressure conditions during core operation. These analyses are used to determine the centerline melt limit and the maximum fuel rod burnup limit, which is based on the fuel rod internal pressure. In addition, the TACO3 and GDTACO analyses provide initial fuel temperature and pressure conditions for LOCA and non-LOCA safety analyses. A more complete discussion of the codes and their associated analysis methods is contained in the paragraphs below and the respective topical report; BAW-10162P-A (Reference 4) for TACO3, BAW-10184P-A (Reference 5) for GDTACO, BAW-10231P-A (Reference 20) for COPERNIC. These reports also contain comparisons of the code predictions to measured data.

TACO3

The TACO3 code, with its Fuel Rod Gas Pressure Criteria, is a state-of-the-art methodology for fuel rod thermal performance analysis. This package applies to fuel rod burnups to 62,000 MWd/mtU. As the need for burnups approaching these limits increases, AREVA continually acquires data supporting the extension of burnup limits and evaluates the existing code models for suitability. The integration of French technology will aid this process by providing access to additional extended burnup data, models, codes, and methods.

The TACO3 fuel performance code is a major evolution in the prediction of fuel rod performance. TACO3 uses best-estimate models benchmarked to an extensive data base of fuel performance data from numerous industry sponsored experimental programs. TACO3 uses a complete set of new thermal and mechanical models, as well as new fuel and cladding material relations. Several models represent advances in the state-of-the-art. The TACO3 fuel temperature predictions have less uncertainty than other comparable codes. The NRC has reviewed and approved TACO3. TACO3 predicts the following as a function of burnup:

- Centerline Fuel Melt
- Fuel Rod Internal Gas Pressure
- LOCA Analysis Initialization Parameters
- Cladding Strain
- Creep Collapse Analysis Initialization Parameters

TACO3 uses best-estimate inputs to provide best-estimate predictions. Statistical evaluations are performed to estimate uncertainties and provide conservative results for use in licensing evaluations. Code and power prediction uncertainties and manufacturing variations are considered for internal gas pressure uncertainties. Statistical parameters obtained from the analysis of an extensive code benchmark database evaluate fuel temperature uncertainties. Transient fission gas release and cladding oxide effects are also represented to provide appropriate conservatism.

GDTACO

GDTACO is a quasi-best-estimate steady-state fuel pin thermal analysis code that was written to provide a conservative assessment of the thermal performance of UO_2-Gd_2O_3 fuel. The code includes models that predict gap conductance, fuel densification and swelling, cladding creep and deformation, gap closure and fission gas release. GDTACO, which was derived from the TACO3 best-estimate uranium dioxide code, has incorporated code models that are based on fuel performance data gathered from the UO_2-Gd_2O_3 fuel lead test assembly program run at Duke Power Company's Oconee-1 Plant. That test program, sponsored by Framatome, Duke Power Company and the U.S. Department of Energy, provided fuel performance data that was used to benchmark the UO_2-Gd_2O_3 models in GDTACO. Where no benchmark data was available, an appropriate degree of conservatism was added to the GDTACO models to compensate for the uncertainty.

COPERNIC

The COPERNIC computer code is the fuel performance code for fuel rod design and analysis of slightly enriched uranium dioxide fuels and urania-gadolinia fuels with the advanced cladding material, M5®. The COPERNIC code can be used for a broad range of fuel rod design, analysis and optimization tasks. Its primary focus is fuel rod licensing-type analyses, which include fuel rod internal gas pressure, LOCA initialization, fuel melt, cladding strain, creep collapse initialization, and cladding peak oxide thickness analysis.

The COPERNIC is an amalgam of individual phenomenological models tied together by a master program that integrates the geometric and temporal solution. These individual phenomenological models simulate the various mechanisms at work in a fuel rod – heat generation, heat transfer and thermal expansion in the fuel and cladding; fuel densification and swelling; fuel fracture and relocation; fission gas generation and release; pellet and cladding stresses and strains; and cladding corrosion and hydriding.

The thermal models include the coolant-rod heat transfer, the fuel-cladding gap conductance, the fuel thermal conductivity, the heat transfer gap closure, and the fuel radial power distribution. The COPERNIC fuel thermal conductivity model considers the effect from burnup degradation and radiation degradation. The fuel thermal conductivity is corrected by a temperature-dependent porosity factor.

The effects of pellet and cladding dimension change are considered in the COPERNIC code. The COPERNIC code calculates the total pellet strains from solid swelling, gaseous swelling, densification, thermal expansion, and relocation models. The total cladding strains are calculated from the thermal, creep, elastic, and high stress creep models.

Two fission gas release models operate within the COPERNIC code: a steady-state model and a transient model that tracks the fuel response to rapid power changes. The COPERNIC steady-state model has two parts: an athermal knockout-recoil component and thermally activated diffusion component, leading to a grain boundary accumulation, saturation, and release. The transient gas release model consists of an enhanced diffusion model for short times, and a burst model that involves controlled release of the grain boundary gas inventory on a time basis related to the current diffusion coefficient.

The waterside cladding corrosion model in COPERNIC determines the growth of the oxide layer that forms on the outer surface of the fuel rod cladding as a function of environmental condition. The corrosion model is formulated with pre-transition and post-transition corrosion relationships.

4.5.4.3.4.3 Hydrodynamic Instability

The analytical methods used to assess hydraulic instability are discussed in Paragraph 4.4.3.5. Those methods are not affected by the insertion of the Mark-BW and/or Advanced W17 HTP fuel design.

4.5.4.3.5 Hydrodynamic and Flow Power Coupled Instability

Section 4.4.3.5 states that minor plant-to-plant differences in Westinghouse reactor designs such as fuel assembly arrays, core power to flow ratios, fuel assembly length, etc., will not result in gross deterioration of the power margin that is available to offset thermohydrodynamic instabilities. Since

the Mark-BW fuel design is both thermally and hydraulically similar to the Westinghouse design it is replacing, there will be no adverse impact on the power margins that are available. For the transition to the Advanced W17 HTP fuel design, the fuel design is both thermally and hydraulically similar to the Mark-BW design (which is similar to the Westinghouse design it replaced), there will be no adverse impact on the power margins that are available.

4.5.4.3.6 Temperature Transient Effects Analysis

Water-logging damage of a previously defected fuel rod has occasionally been postulated as a mechanism for subsequent rupture of the cladding. However, fuel rod failures of this type have never been observed in AREVA fuel. In addition, testing performed at INEL (Reference 8) has shown that energy depositions much greater than those experienced during normal operating transients are required for fuel failure. This is discussed further in Sections 4.4.3.6 and 4.5.2.1.3.1. Additional testing (Reference 9) showed that if a failure did occur, the ruptured rod would not be expected to cause significant damage to the rest of the core. That test, which was performed under conditions that are much more severe than those seen under normal operation, showed that when a rupture did occur, there was no failure propagation and the most significant damage caused to the remainder of the core was the bowing of adjacent fuel rods.

4.5.4.3.7 Potentially Damaging Temperature Effects During Transients

The fuel rod experiences many operational transients during its residence in the core. A number of thermal effects must be considered when analyzing the fuel rod performance. The clad can be in contact with the fuel pellet at some time in the fuel lifetime. Clad-pellet interaction occurs if the fuel pellet temperature is increased after the clad is in contact with the pellet. Clad-pellet interaction is discussed in Section 4.5.2.1.3.1.

Increasing the fuel temperature results in an increased fuel rod internal pressure. One of the fuel rod design bases requires that the fuel rod internal pressure of the peak fuel rod in the reactor be limited to a value below that which would cause (1) the fuel-clad gap to increase due to cladding outward creep during steady-state operation and (2) extensive departure from nucleate boiling (DNB) propagation to occur. (see Sections 4.5.2.1.1.1 and 4.5.2.1.3.1).

The potential effects of operation with water-logged fuel are discussed in Section 4.5.4.3.6. As discussed in that section, water-logging is not a concern during operational transients.

If axial gaps in the fuel pellet column occur due to densification, the cladding has the potential of collapsing into a gap (i.e. flattening). As discussed in Sections 4.5.2.1.1.1 and 4.5.2.1.3.1, creep collapse is precluded by ensuring that the predicted creep collapse life of the fuel rod exceeds the maximum expected incore life.

There can be a differential thermal expansion between the fuel rods and the guide thimbles during a transient. Excessive bowing of the fuel rods could occur if the grid assemblies did not allow axial movement of the fuel rods relative to the grids. Thermal expansion of the fuel rods is considered in the grid design so that axial loads imposed on the fuel rods during a thermal transient will not result in excessively bowed fuel rods (see Sections 4.5.2.1.1.1, 4.5.2.1.2.1, and 4.5.2.1.2.2).

4.5.4.3.8 Energy Release During Fuel Element Burnout

As discussed in Section 4.4.1, the reactor core is designed to preclude any temperature effect that may cause damage to fuel rods during normal operation and Condition I and II transients. However, in the unlikely event that DNB occurs, the cladding temperature will begin to increase, causing a potential increase in the chemical reaction rate between cladding and coolant. As discussed in Section 4.5.2.3.1, the Baker-Just equation (Reference 10) has been used to estimate the energy produced and the thickness of cladding reacted as a function of time with temperature as a parameter. Based on those results, it was concluded that the potential for chemical reaction between fuel rod cladding and coolant is small and no adverse effects will result during normal operation or the infrequent event type accidents considered in Chapter 15 of this document.

4.5.4.3.9 Energy Release or Rupture of Water-logged Fuel Elements

A full discussion of water-logging including energy release is contained in Section 4.5.4.3.6. It is noted that the resulting energy release is not expected to adversely affect neighboring fuel rods.

4.5.4.3.10 Fuel Rod Behavior Effects from Coolant Flow Blockage

Coolant flow blockages can occur within the coolant channels of a fuel assembly or external to the reactor core. In either case, the flow blockage will cause a local reduction in coolant flow. The effects of these flow reductions on core performance must be investigated.

A subchannel DNBR analysis that determines the effect of a flow blockage in the hot subchannel has been performed. That analysis has shown that flow blockages of up to 70% have only a minimal effect on the hot channel DNBR. This is due to the fact that flow recovery occurs rapidly above the blockage.

AREVA has also developed an evaluation model for the LOCA that complies with the flow blockage requirements of Appendix K of 10 CFR 50. Discussion of that evaluation model and its specific application to Sequoyah are contained in BAW-10168-A Rev. 3 and BAW-10220P (References 11 and 12), respectively. A further discussion of that evaluation can be found in Section 15.4.1.

4.5.4.4 TESTING AND VERIFICATION

4.5.4.4.1 Tests Prior to Initial Criticality

A reactor coolant flow test is performed following fuel loading but prior to power operation. This test verifies that proper coolant flow rates have been used in the core thermal and hydraulic analysis. The required flow rate is specified in Technical Specification 3.4.1.

4.5.4.4.2 Initial Power and Plant Operation

Core power distribution measurements are made at regular intervals during core operation. These measurements ensure that conservative peaking factors are used in the core thermal and hydraulic analysis. Allowable peaking factors are specified in the Core Operating Limits Report (COLR).

4.5.4.4.3 Component and Fuel Inspections

Inspections performed on the manufactured fuel are delineated in Section 4.5.2.4. Fabrication measurements are obtained to verify that the assumptions made in the fuel thermal analysis regarding fuel densification and manufacturing variations bound the actual fabrication data.

4.5.4.5 INSTRUMENTATION APPLICATION

Section 4.4.5 describes the instrumentation systems that are in place at the Sequoyah Plant to verify the core power and temperature distribution during plant operation. AREVA has developed plant verification methodologies that are consistent with these systems. Therefore, the descriptions contained in Section 4.4.5 remain applicable for the Mark-BW fuel design and for the transition to the Advanced W17 HTP fuel design.

4.5.4.6 REFERENCES

1. BAW-10170P-A, Statistical Core Design For Mixing Vane Cores, December 1988.

2. BAW-10159P-A, BWCMV Correlation of Critical Heat Flux in Mixing Vane Grid Fuel Assemblies, July 1990.

3. BAW-10189P-A, CHF Testing and Analysis of the Mark-BW Fuel Assembly Design, January 1996.

4. BAW-10162P-A, TACO3 - Fuel Pin Thermal Analysis Computer Code, October 1989.

5. BAW-10184P-A, GDTACO - Urania-Gadolinia Thermal Analysis Code, February 1995.

6. BAW-10156-A, Rev. 01, LYNXT: Core Transient Thermal-Hydraulic Program, August 1993.

7. BAW-10172P, Mark-BW Mechanical Design Report, July 1988.

8. Stephan, L. A. "The Effects of Cladding Material and Heat Treatment on the Response of Waterlogged UO_2 Fuel Rods to Power Bursts." IN-ITR-111. January 1970.

9. Grund, J. E. "Experimental Results of Potentially Destructive Reactivity Additions to an Oxide Core." IDO-17028. December 1964.

10. Baker, L. and Just, L.C. "Studies of Metal-Water Reaction at High Temperatures - Experimental and Theoretical Studies of the Zirconium Water Reaction." ANL-6548. May 1962.

11. BAW-10168-A, Rev. 03, B&W LOCA Evaluation Model for Recirculating Steam Generator Plants, November 1993.

12. BAW-10220P, Mark-BW Fuel Assembly Application for Sequoyah Nuclear Units 1 and 2, March 1996.

13. BAW-10147PA-R1, Fuel Rod Bowing in Babcock & Wilcox Fuel Designs - Revision 1, May 1983.

14. BAW-10186P-A, Rev.2, Extended Burnup Evaluation, June 2003.

15. BAW-1419, PEEL - A Transport Code for Special Depletion, May 1978.

16. BAW-10115A, NULIF - Neutron Spectrum Generator, Few-Group Constant Calculator and Fuel Depletion Code, February 1972.

17. L. S. Tony, Prediction of Departure From Nucleate Boiling for an Axially Non-Uniform Heat Flux Distribution, Journal of Nuclear Energy, 21, 1967, pp. 241-248.

18. BAW-10199P-A, The BWU Critical Heat Flux Correlations, August 1996.

19. BAW-10243P-A, Statistical Fuel Assembly Hold Down Methodology, Framatome ANP, Lynchburg, Virginia, September 2005.

20. BAW-10231P-A, Rev. 1, COPERNIC Fuel Rod Design Computer Code, Framatome ANP, Lynchburg, Virginia, January 2004.

21. ANF-1224P-A, Departure From Nucleate Boiling Correlation For High Thermal Performance Fuel, Advanced Nuclear Fuels Corporation, May 1989.

22. BAW-10241P-A, Rev. 1, BHTP DNB Correlation Applied With LYNXT, July 2005.

23. NRC “Safety Evaluation Report with Open Items for the U.S. EPR Portions of Chapter 15, ‘Transient and Accident Analyses’”, ADAMS Accession Number ML090900096, transmitted to Areva NP under NRC letter ML101440262 dated August 10, 2010.

Table 4.5.1-1 Reactor Design Comparison Table

Information similar to that presented in Table 4.1-1 is given for Mark-BW fuel and Advanced W17 HTP fuel in Table 4.5.4.2-1.

TABLE 4.5.1-2 ANALYTIC TECHNIQUES IN CORE DESIGN

Analysis	Technique	Computer Code	Section Referenced
Mechanical Design of Core Internals:			
Loads, deflections, and stress analysis	Static and dynamic modeling	Blowdown code,CRAFT2, finite element structural analysis code, and others	
Fuel Rod Design:			
Fuel performance characteristics (temperature internal pressure, clad stress, etc.)	Semi-emperical thermal model of fuel rod with consideration of fuel density changes, heat transfer, fission gas release, etc.	AREVA fuel rod design model (COPERNIC, TACO3, GDTACO)	4.5.2.1.1.1 4.5.2.1.3 4.5.2.3.1 4.5.4.1.2 4.5.4.2.2 4.5.4.2.10.1 4.5.4.3.4.2 4.5.4.3.7
Fuel cladding ovality induced stresses	Finite difference stress-creep strain code	AREVA fuel rod design model (CROV)	4.5.2.1.3 4.5.4.3.7
Nuclear Design:			
Cross sections and group constants	2-group microscopic and macroscopic cross sections fitted versus depletion and spectral history effects, calculated with a multi-group, 2-D lattice transport theory code	CASMO-3	4.5.3.3
Pin power distributions, 2-D and 3-D power distributions, fuel depletion, reactivity coefficients, critical boron concentrations	3-D coarse mesh (nodal), 2-group diffusion theory, coupled thermal-hydraulic and doppler feedback, fuel assembly pin power reconstruction, 2-group diffusion theory	NEMO	4.5.3.3
Thermal-Hydraulic Design:			
Steady-state and transient DNB analysis	Subchannel analysis of both steady-state and transient conditions. Includes terms for determining inter-bundle and inter-subchannel crossflows. Code is designed to provide one-pass modeling.	LYNXT	4.5.4.2.3.1 4.5.4.3.4.1

Table 4.5.1-3 Design Loading Conditions for Reactor Core Components

No change to this table. See Table 4.1-3

Table 4.5.2-1

Post-Irradiation Examination Scope

The following inspections of the four Mark-BW lead assemblies were performed after McGuire 1, Cycles 5, 6, 7, and 8*

1. Visual Inspection (Video)
2. Fuel Assembly Length
3. Shoulder Gap (on selected peripheral rods)
4. Holddown Spring Set
5. Fuel Rod Length (on selected peripheral rods)
6. Spacer Grid Axial Position
7. Fuel Rod Cladding Oxide Thickness
8. Fuel Rod Diameter
9. Fuel Assembly Bow

* One assembly was removed for cycle 7 and reinserted for Cycle 8.

Table 4.5.2-2

Reactor Coolant System Design Transient Group Core Power History for
Fuel Rod Fatigue Analysis (Full Core Mark-BW)

Transient	Number of Fatigue Cycles	Core Power History (% FP)
Heatup and cooldown at 100 F/hr. (pressurizer cooldown 200 F/hr.)	200 + 200	100-HZP-0-HZP-100
Unit loading and unloading at 5% of full power/minute Step load increase and decrease of 10% of full power (FP) Steady-state fluctuations.	(18300x2)/2000x2/infinite	100-95-100-90-100
Large step load decrease (95% of FP with steam dump) Loss of power (blackout with natural circulation in the reactor coolant system) Loss of flow (partial loss of flow, one pump only) Reactor trip from FP Inadvertent auxiliary spray	200/200/80/400/10	100-HZP
Loss of load, without immediate turbine or reactor trip Loss of power (blackout with natural circulation in the reactor coolant system)	80/40	100-0
Minor loss of coolant accident or secondary steam line break	1	100-0

Terms: HZP - Hot Zero Power
FP - Full Power

Note: The cyclic/transient limits used for the fuel rod fatigue analysis, as summarized in this table, are bounding for the replacement steam generator cyclic/transient limits given in Table 5.2.1-1.

Table 4.5.2-3

Reactor Coolant System Design Transient Group Core Power History for Fuel Rod Fatigue Analysis (Full and Transition Core Advanced W17 HTP)

Transient	Number of Fatigue Cycles	Core Power History (% FP)
Heatup and cooldown at 100 °F/hr	200 + 200	0-HZP-100 100-HZP-0
Unit loading and unloading at 5% of full power/minute	18300×2	15-100 100-15
Step load increase and decrease of 10% of full power	2000×2	90-100 100-90
Steady-state fluctuations	Infinite	
Large step load decrease (95% of FP)	200	100-HZP
Reactor trip from FP	400	
Pressurizer auxiliary spray actuation	12	
Loss of flow in one reactor coolant loop	80	100-HZP
Loss of load, without immediate turbine or reactor trip	80	100-HZP
Loss of offsite A.C. electrical power (blackout with natural circulation in the reactor coolant system)	40	
Main reactor coolant pipe break or steam pipe break	1	100-0

Terms: HZP - Hot Zero Power
FP - Full Power

Note: The cyclic/transient limits used for the fuel rod fatigue analysis, as summarized in this table, are bounding for the replacement steam generator cyclic/transient limits given in Table 5.2.1-1.

Table 4.5.3-1

REACTOR CORE DESCRIPTION

This Table remains unchanged from Table 4.3.2-1 except as noted below, which address the Advanced W17 HTP and Mark-BW fuel assembly designs.

Fuel assemblies	Mark-BW	Advanced W17 HTP
Number	193	193
Rod Array	17 X 17	17X17
Rods per assembly	264	264
Rod pitch, in.	0.496	0.496
Overall transverse dimensions, in.	8.425 X 8.425	8.424 x 8.424
Fuel weight (as UO_2), lb per assembly	1141	1140.23
Zirconium alloy weight, lb per assembly	295	304.68
Number of grids per assembly	8	11
	1 top	3 IFM 's
	1 bottom	1 end
	6 Intermediate	7 Intermediate
Composition of grids	Inconel-718 (top and bottom)	Inconel-718 (end)
	Zircaloy-4 (interm.)	Zircaloy-4 (interm. and IFM's)
Weight of grids per assembly, lbs.	4 (Inconel-718)	2.87 (Inconel-718)
	15 (Zircaloy-4)	25.57 (Zircaloy-4)
Number of Guide Thimbles per assembly	24	24
Composition of guide thimbles	Zircaloy-4 or M5	Zircaloy-4
Diameter of guide thimbles (upper part), in.	0.450 ID x 0.482 OD	0.450 ID X 0.482 OD
Diameter of guide thimbles (lower part), in.	0.397 ID x 0.429 OD	0.397 ID X 0.482 OD
Diameter of Instrument guide thimble, in.	0.450 ID x 0.482 OD	0.450 ID X 0.482 OD
Fuel Rods		
Number	264/assembly	264/assembly
Outside diameter, in.	0.374	0.374
Diameter gap, in.	0.0065	0.0065
Clad thickness, in.	0.024	0.024
Clad material	Zircaloy-4 or M5	M5 Fully Recrystallized
Inside roughness, :in AA	45	45
Internal void volume, in^3	1.153	1.155
Fuel pellets		
Material	UO_2 sintered	Enriched UO2
Density, %TD	96	96
Fuel enrichments w/o:	Cycle Specific	Cycle Specific
Diameter, in.	.3195	0.3195
Length, in.	.400	0.4
Roughness, :μ in AA	70	63
Mass of UO_2 per foot of fuel rod, lb/ft	0.360	0.36

TABLE 4.5.4.2-1 (Sheet 1)

REACTOR DESIGN COMPARISON TABLE - FOUR LOOPS IN OPERATION

Thermal and Hydraulic Design Parameters	**Sequoyah Units 1 & 2 17 x 17 With Densification**	**Reference Plant 17 x 17 With Densification**	**SQN Units 1 & 2 With Mark-BW 17 x 17 SCD Methods**	**SQN Units 1 & 2 With Mark-BW 17 x 17 SCD Methods**	**Sequoyah Units 1 & 2 With Advanced W17 HTP 17 x 17 SCD Methods**
Reactor core heat output, MWt	3411	3411	3411	3455	3455
Reactor core heat output, Btu/hr	11,641.7 x 10^6	11,641.7 x 10^6	11,641.7 x 10^6	11,788.9X10^6	11,788.9 X10^6
Heat generated in fuel, %	97.4	97.4	97.4	97.4	97.4
System pressure, nominal, psia	2250	2250	2280	2280	2280
System pressure, minimum steady-state, psia	2220	2220	2250	2250	2250
Minimum DNBR at nominal conditions:					
Typical flow channel	2.41	2.04	2.59	2.47	2.39
Thimble (cold wall) flow channel	2.27	1.71	2.54	2.42	2.11
Minimum DNBR for design transients:	>1.38	>1.30	>1.50 [d]	>1.431 [d]	>1.64 (Transition Cores) [d] >1.47 (Full Cores) [d]
DNB correlation	WRB-1	"L" - GRID (W-3) With modified spacer factor	BWCMV-A	BWCMV-A	BHTP
Coolant Flow Total thermal flow rate, lb/hr	138.0 x 10^6	132.7 x 10^6	136.19 x 10^6	136.3 X 10^6	142.9 X 10^6
Effective flow rate for heat transfer, lb/hr	127.7 x 10^6	126.7 x 10^6	126.0 x 10^6	124.0 X 10^6	130.0 X 10^6*
Effective flow area for heat transfer, ft^2	51.1 (STD) 51.3 (V5H)	51.1	51.1	51.1	51.1
Average velocity along fuel rods, ft/sec	15.6 (STD) 15.5 (V5H)	15.7	14.5 [g]	14.3 [h]	14.796 [i]**
Average mass velocity, lb/hr-ft^2	2.50 x 10^6 (STD) 2.49 x 10^6 (V5H)	2.48 x 10^6	2.46 x 10^6	2.43 x 10^6	2.51 X 10^6
Coolant Temperature Nominal inlet, °F	546.7	552.5	546.2	545.8	547.25
Average rise in vessel, °F	63.1	64.2	64.1	64.9	61.89
Average rise in core, °F	67.6	66.9	68.7	70.5	67.37
Average in core, °F	582.2	585.9	580.5	581	580.9
Average in vessel, °F	578.2	584.7	578.2	578.2	578.2

* The effective flow rate for heat transfer is decreased to 129.9x10^6 lb/hr. This is applicable to Units 1 and 2, with or without the H-8 control rod assembly.

** The average velocity along the fuel rods is decreased to 14.780 ft/sec. This is applicable to Units 1 and 2, with or without the H-8 control rod assembly.

TABLE 4.5.4.2-1 (Sheet 2)

REACTOR DESIGN COMPARISON TABLE - FOUR LOOPS IN OPERATION

Thermal and Hydraulic Design Parameters **Heat Transfer**	**SQN Units 1 & 2 17 x 17 With Densification**	**Reference Plant 17 x 17 With Densification**	**SQN Units 1 & 2 With Mark-BW 17 x 17 SCD Methods**	**SQN Units 1 & 2 With Mark-BW 17 x 17 SCD Methods**	**SQN Units 1 & 2 With Advanced W17 HTP 17 x 17 SCD Methods**
Active heat transfer, surface area, ft^2	59,700	59,700	59,870	59,870	59,870
Average heat flux, Btu/hr-ft^2	189,800	189,800	189,400	191,800	191,800
Maximum heat flux, for normal operation, Btu/hr-ft^2	440,300 [a]	440,300 [a]	473,500 [e]	479,500 [e]	479,500 [e]
Average thermal output, kW/ft	5.44	5.44	5.43	5.5	5.5
Maximum thermal output, for normal operation, kW/ft	12.6 [a]	12.6 [a]	13.6 [e]	13.8 [e]	13.8 [e]
Peak linear power for determination of protection setpoints, kW/ft	21.1 [c]	18.0 [c]	21.9 UO_2 20.4 UO_2-Gd_2O_3	21.9 UO_2 >19.4 UO_2-Gd_2O_3	20.05 UO_2 >18.95 UO_2-Gd_2O_3
Pressure Drop [b] Across core, psi	23.4 ± 2.3	25.7 ± 2.6	23.4 [f]	20.6	24.6
Across vessel, including nozzle, psi	46.65 ± 4.6	45.1 ± 4.5			

[a] This limit is associated with the value of F_Q = 2.32.
[b] Based on best estimate reactor flow rate as discussed in Section 5.1.
[c] See Subparagraph 4.3.2.2.6.
[d] This value includes margin above the design DNBR value.
[e] This limit is associated with the value of F_Q = 2.50.
[f] Based on best estimate reactor flow rate. Westinghouse Vantage 5H Assembly core ΔP at corresponding conditions is 24.4 psi. The low pressure drop Mark-BW core ΔP at corresponding conditions is 22.3 psi.
[g] Based on SCD thermal design flowrate of 360,100 gpm and 7.5% bypass.
[h] Based on SCD thermal design flowrate of 360,100 gpm and 9.0% bypass (operation with thimble plugs removed).
[i] Based on SCD thermal design flowrate of 378,400 gpm and 9.0%* bypass (operation with thimble plugs removed).

* The maximum bypass flow has increased to 9.1%. This is applicable to Units 1 and 2, with or without the H-8 control rod assembly.

SQN-16

FIGURE 4.5.2-1

MARK-BW FUEL ASSEMBLY*

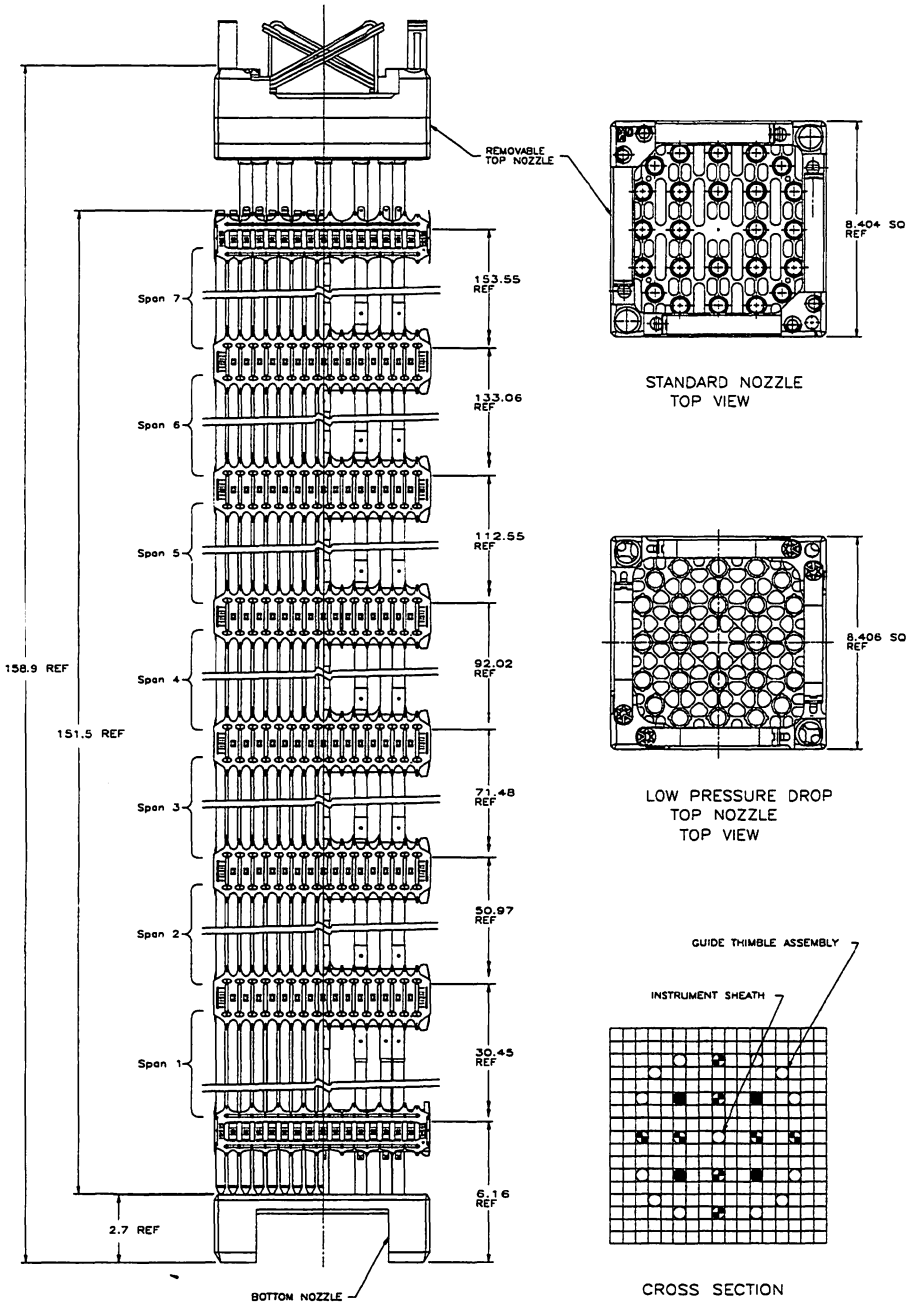

* Dimensions are for reference only

FIGURE 4.5.2-2

MARK-BW FUEL ROD ASSEMBLY

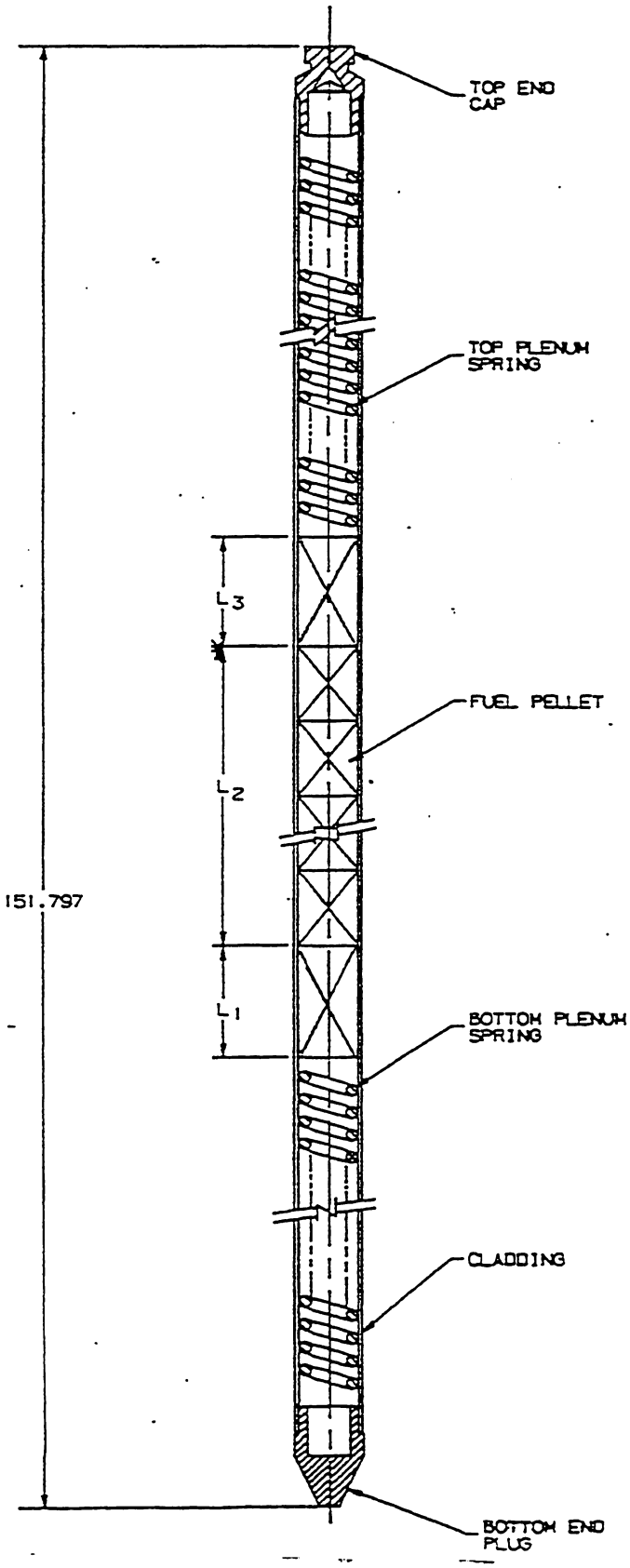

L_3 = AXIAL BLANKET

L_2 = UO_2 PELLETS OR UO_2-Gd_2O_3 PELLETS

L_1 = AXIAL BLANKET

$L_1 + L_2 + L_3$ = 144 INCHES

FIGURE 4.5.2-3

UO_2 FUEL ROD ASSEMBLY LOWER AND UPPER END CAPS

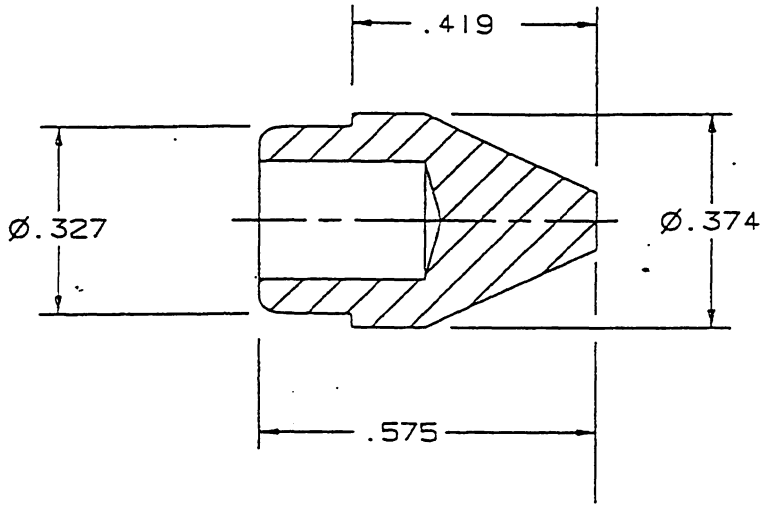

LOWER END CAP

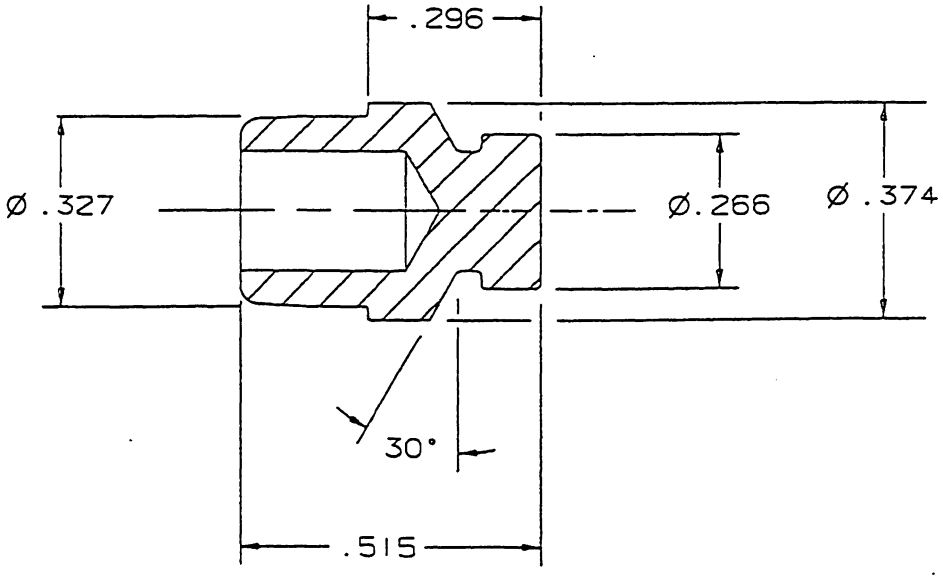

UPPER END CAP

FIGURE 4.5.2-4

UO_2 FUEL ROD ASSEMBLY UPPER AND LOWER PLENUM SPRINGS

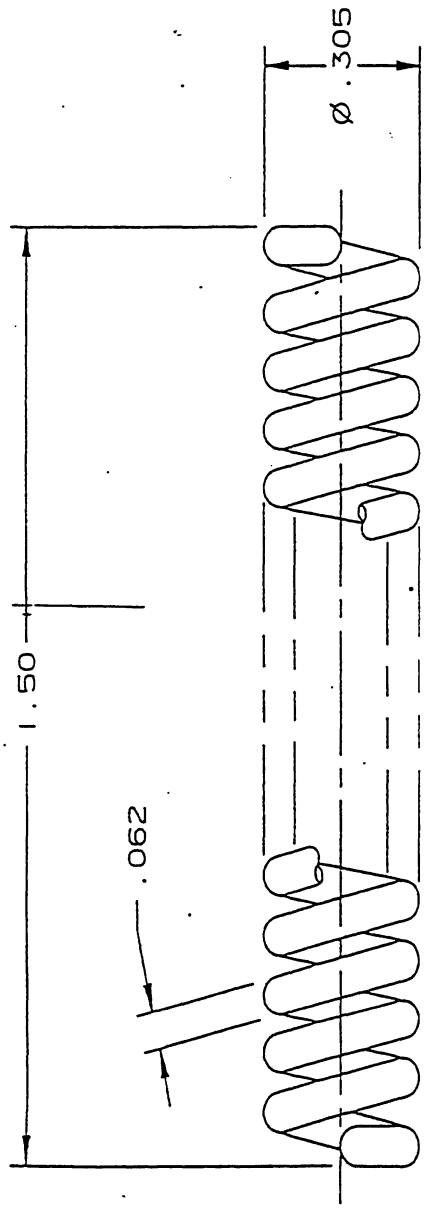

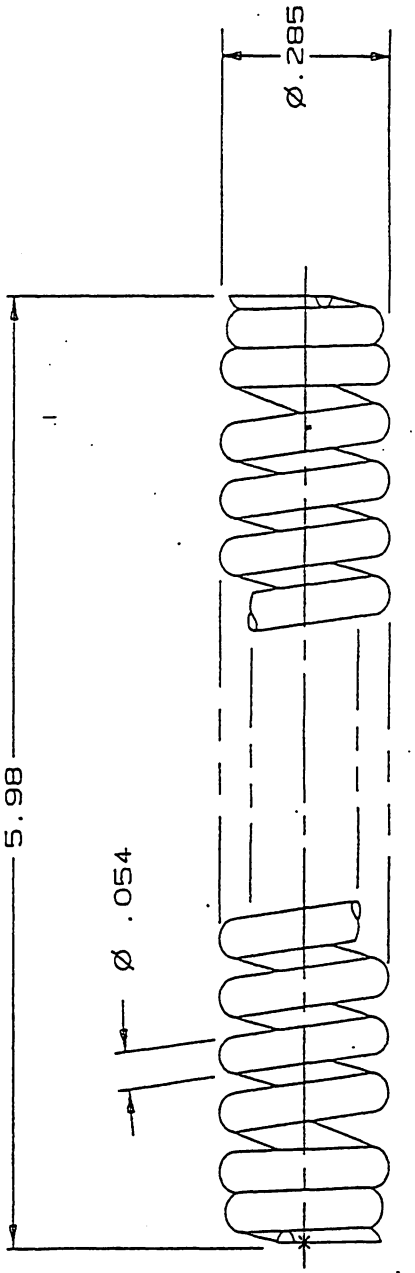

Best Available Historical Image

FIGURE 4.5.2-5A

MARK-BW BOTTOM NOZZLE ASSEMBLY*

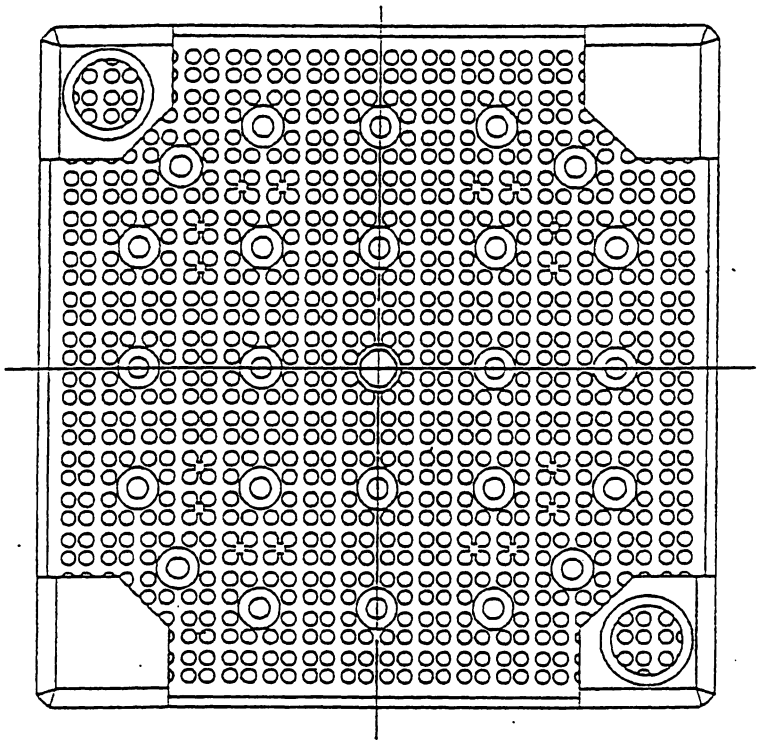

BOTTOM VIEW

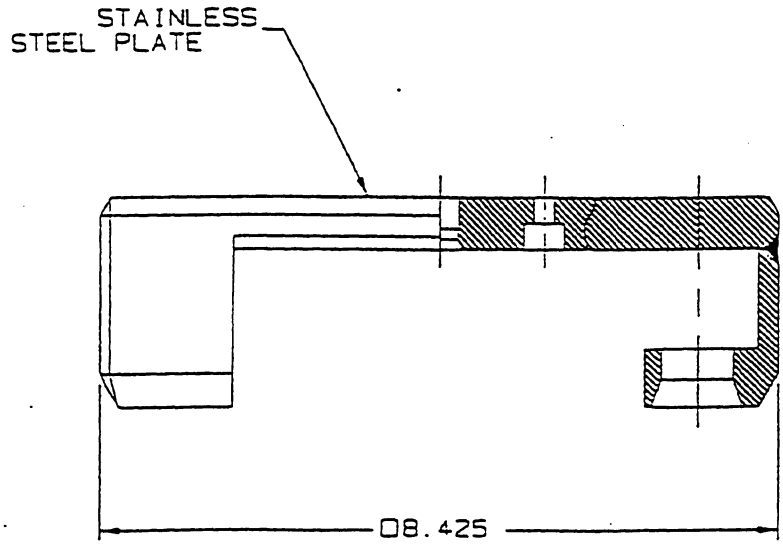

* Dimensions are for reference only

Figure 4.5.2-5B
Low Pressure Drop Mark-BW Bottom Nozzle Assembly *

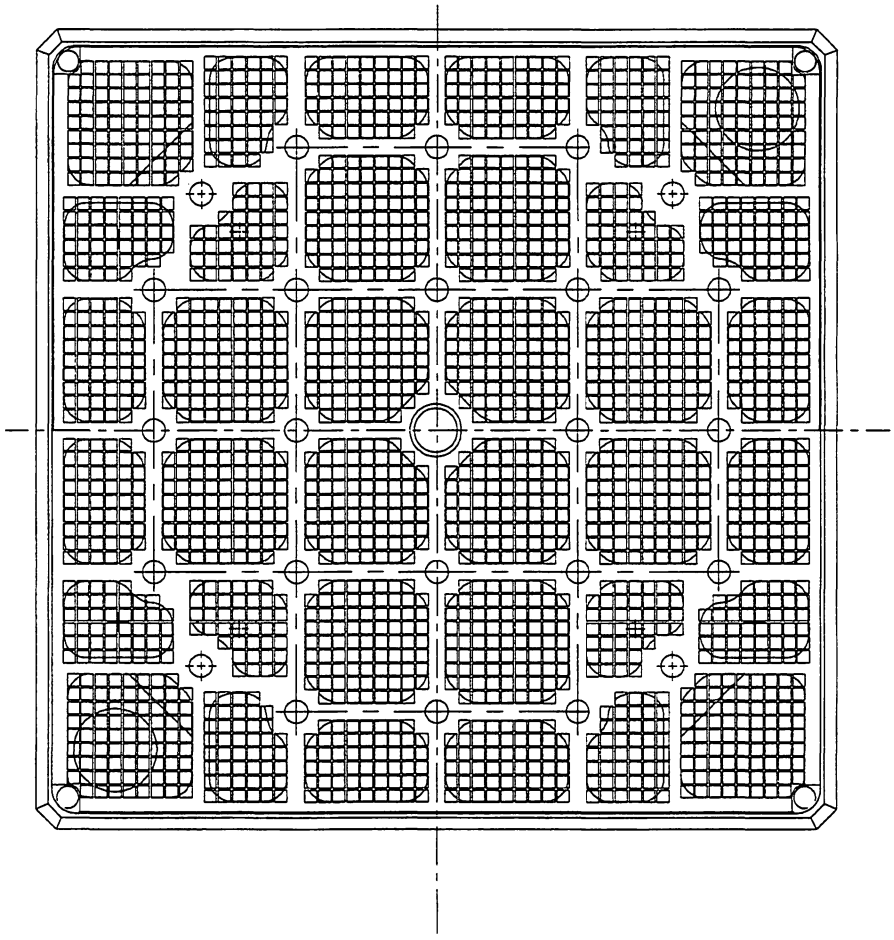

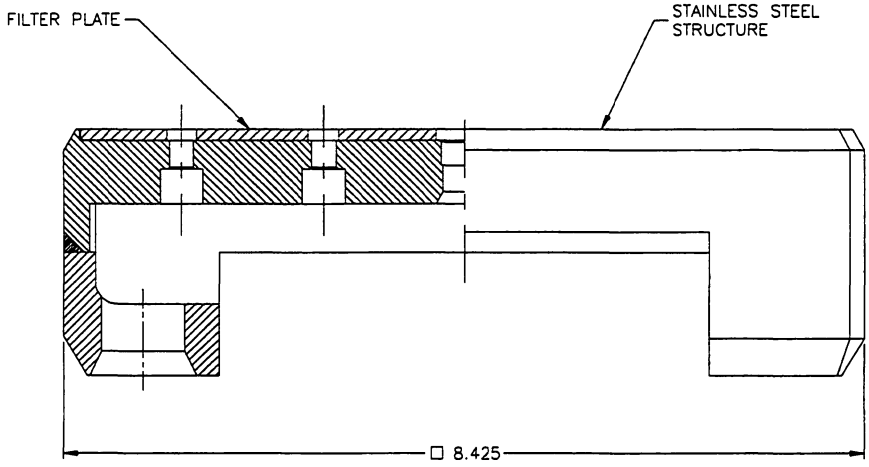

* Dimensions are for reference only

SQN-16

FIGURE 4.5.2-6

BOTTOM NOZZLE GUIDE THIMBLE ATTACHMENT

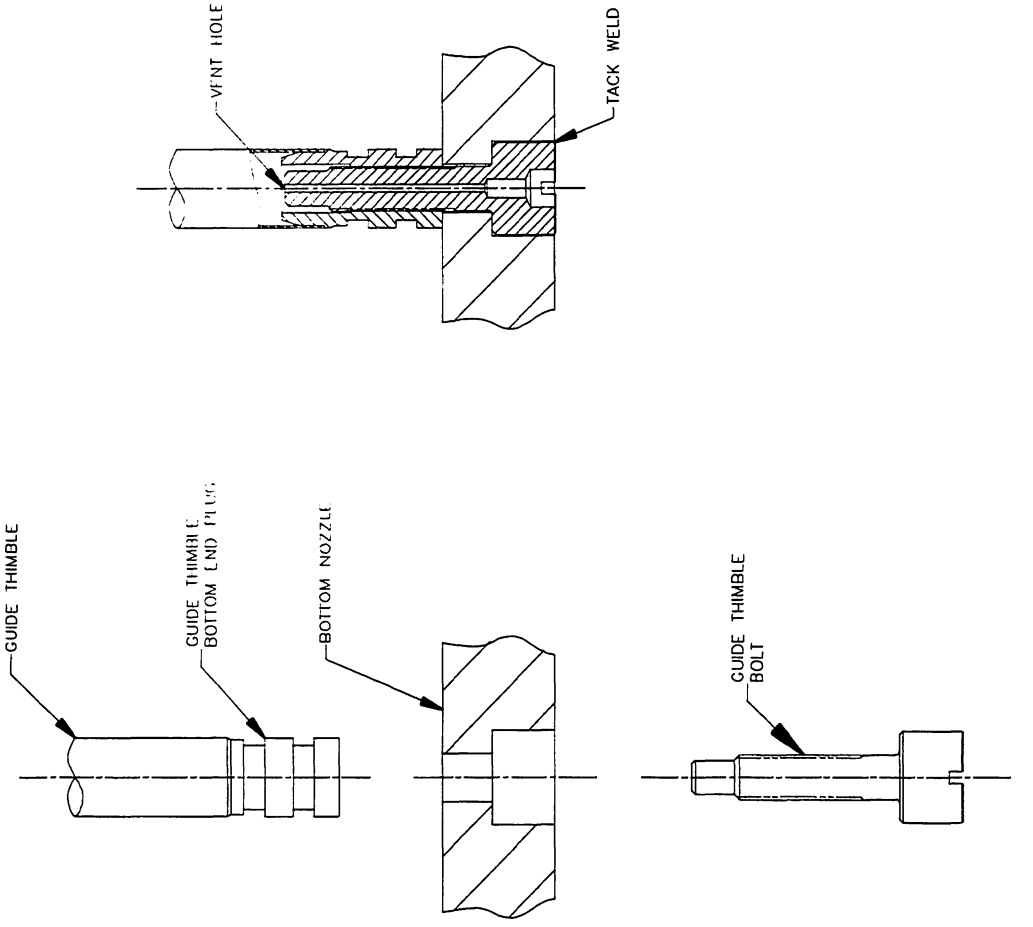

FIGURE 4.5.2-7A

MARK-BW TOP NOZZLE ASSEMBLY *

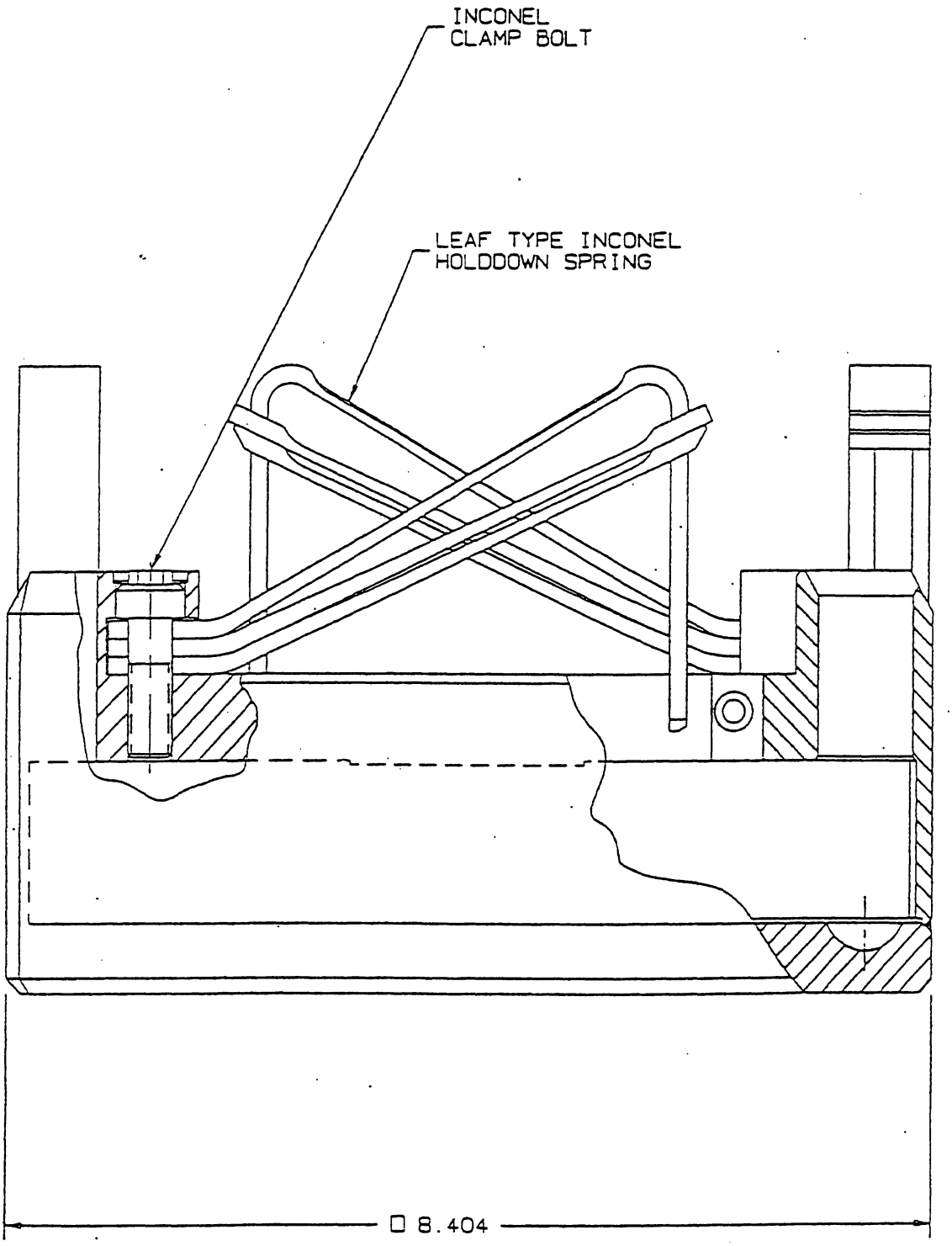

* Dimensions are for reference only

SQN-16

FIGURE 4.5.2-7B

LOW PRESSURE DROP MARK-BW TOP NOZZLE ASSEMBLY*

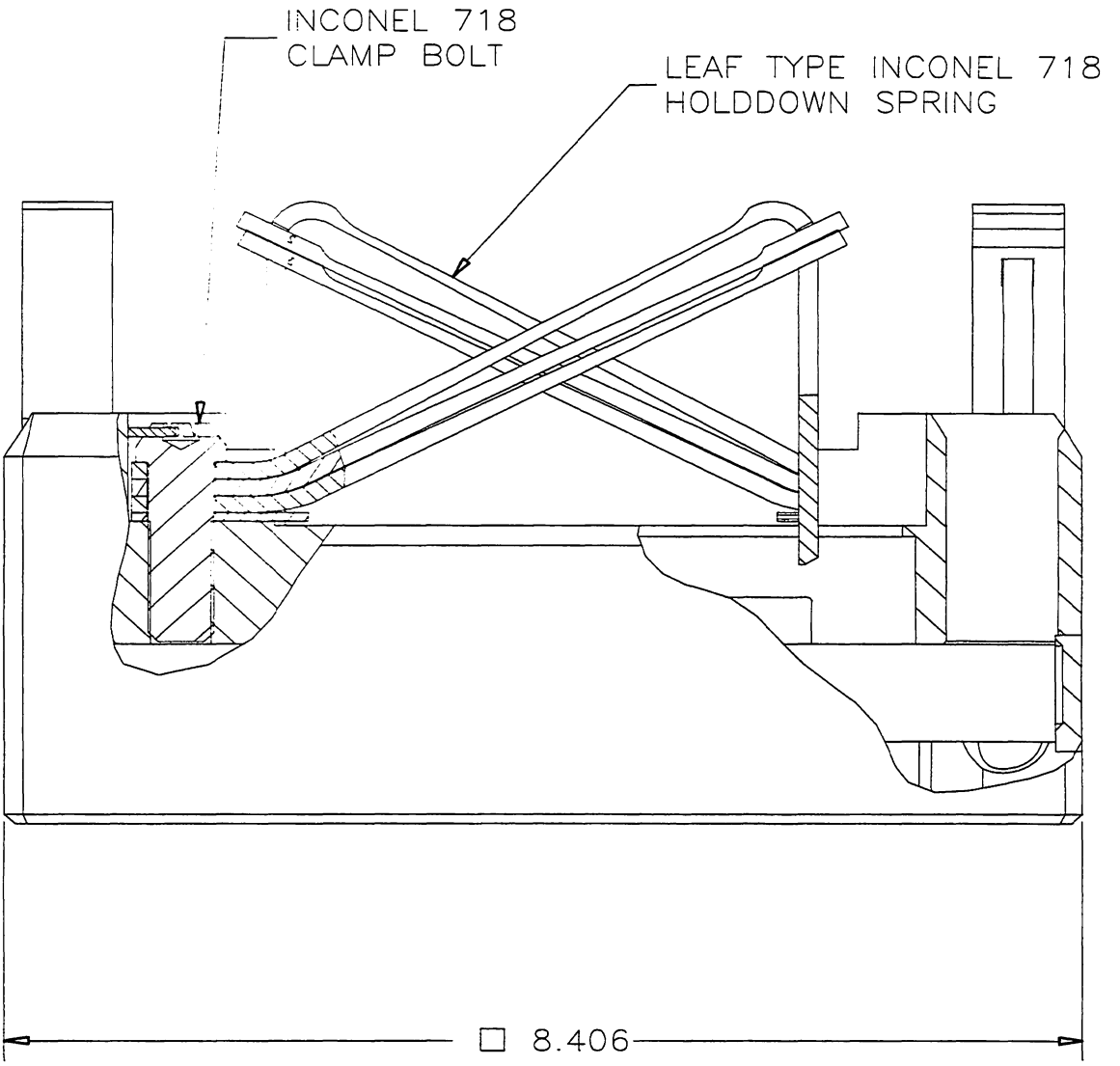

* Dimensions are for reference only

FIGURE 4.5.2-8 A

TOP NOZZLE ASSEMBLY GUIDE THIMBLE ATTACHMENT

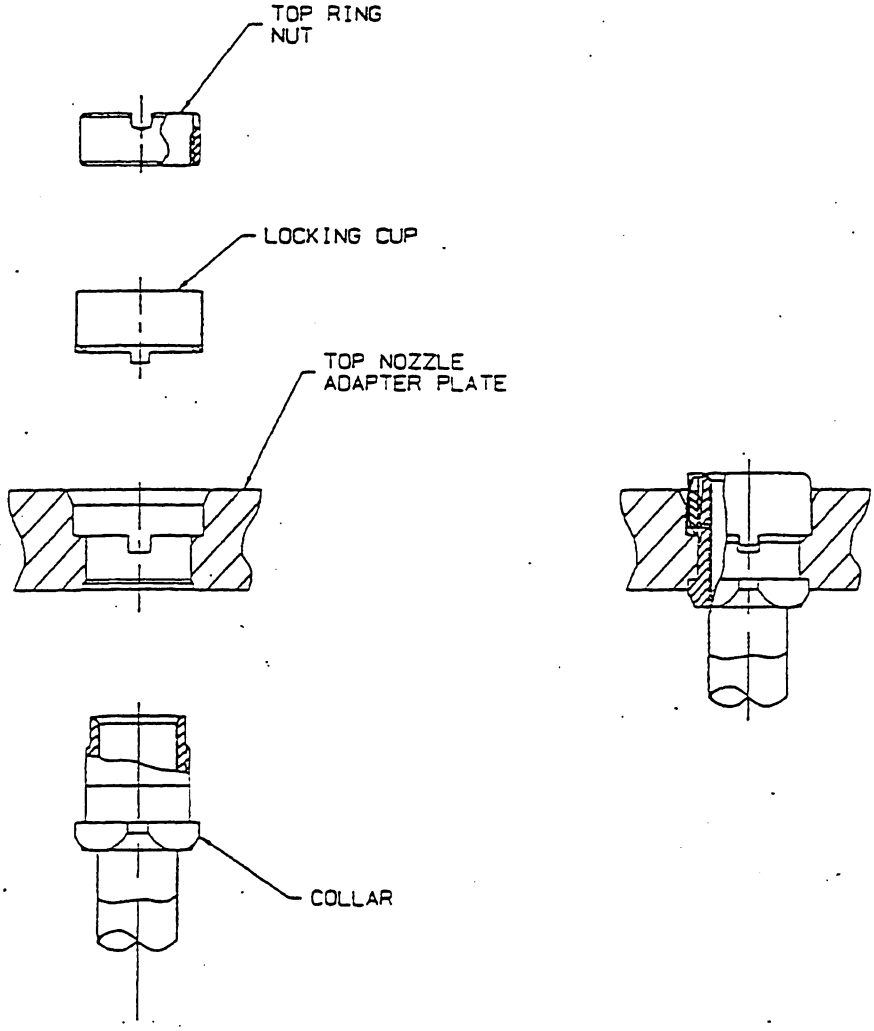

Figure 4.5.2-8B

Low Pressure Drop Mark-BW Top Nozzle Assembly Guide Thimble Attachment

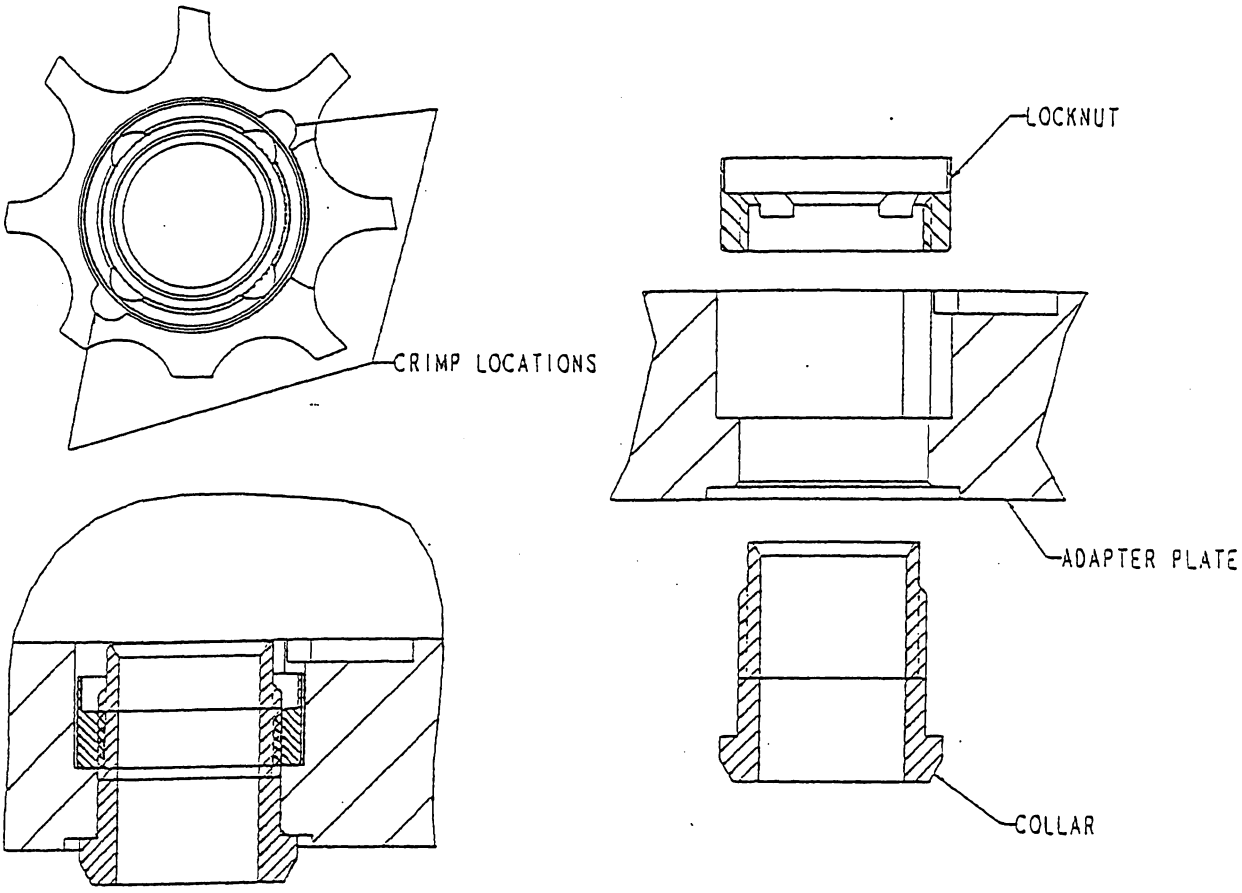

FIGURE 4.5.2-9

MARK-BW SPACKR GRID ASSEMBLY DETAIL

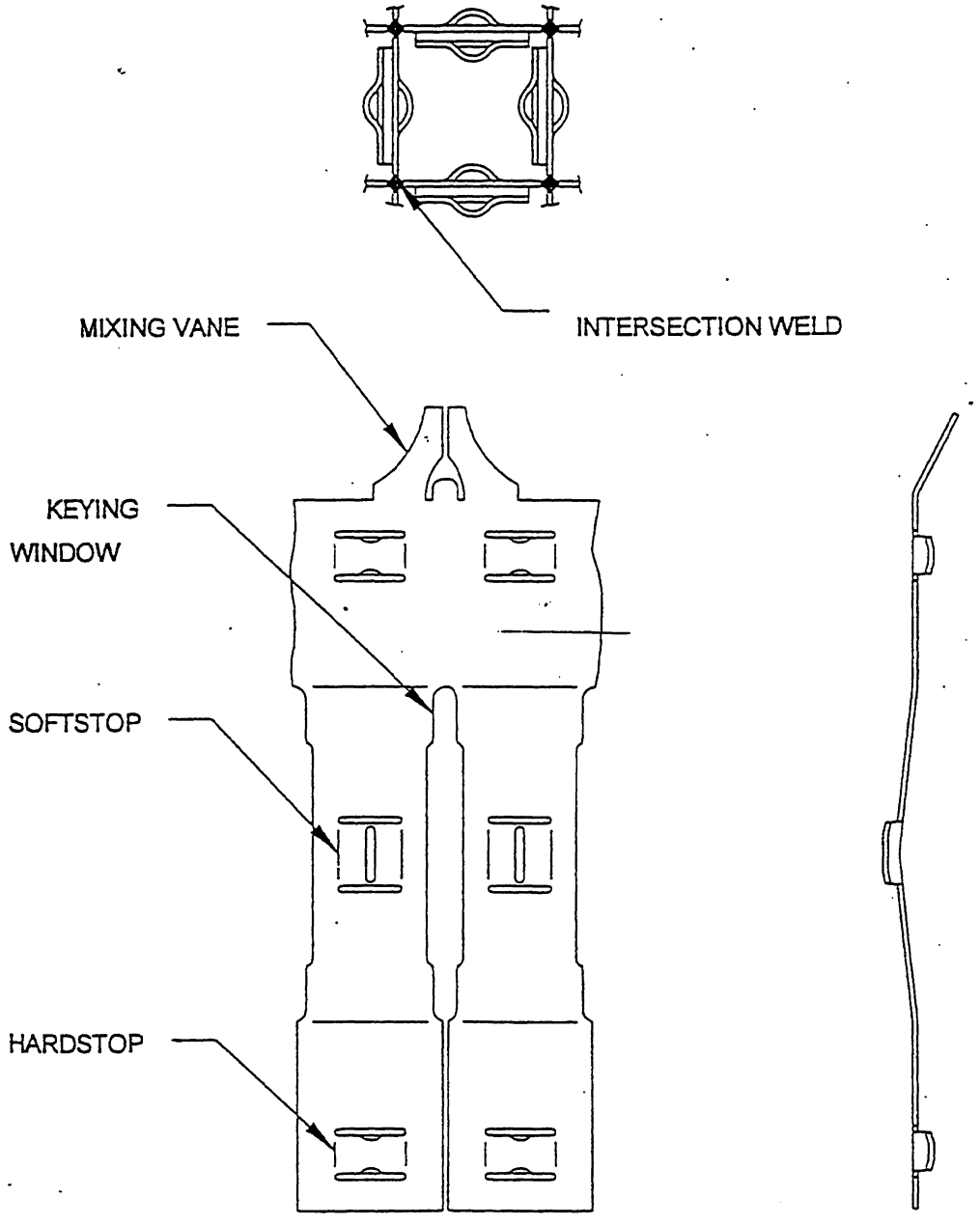

FIGURE 4.5.2-10

UPPER END GRID ASSEMBLY ATTACHMENT

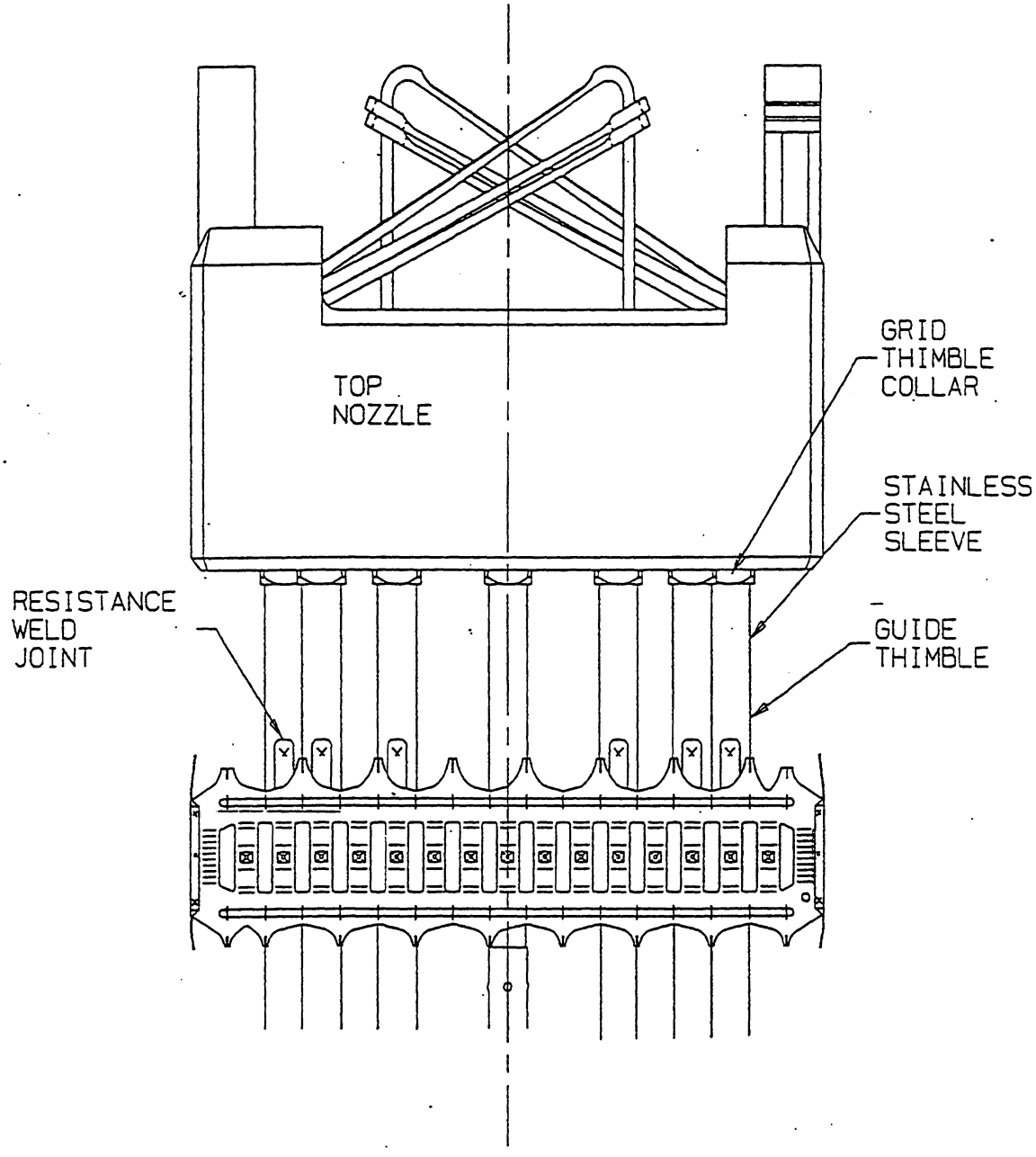

Best Available Historical Image

FIGURE 4.5.2-11

LOWER END GRID ASSEMBLY ATTACHMENT

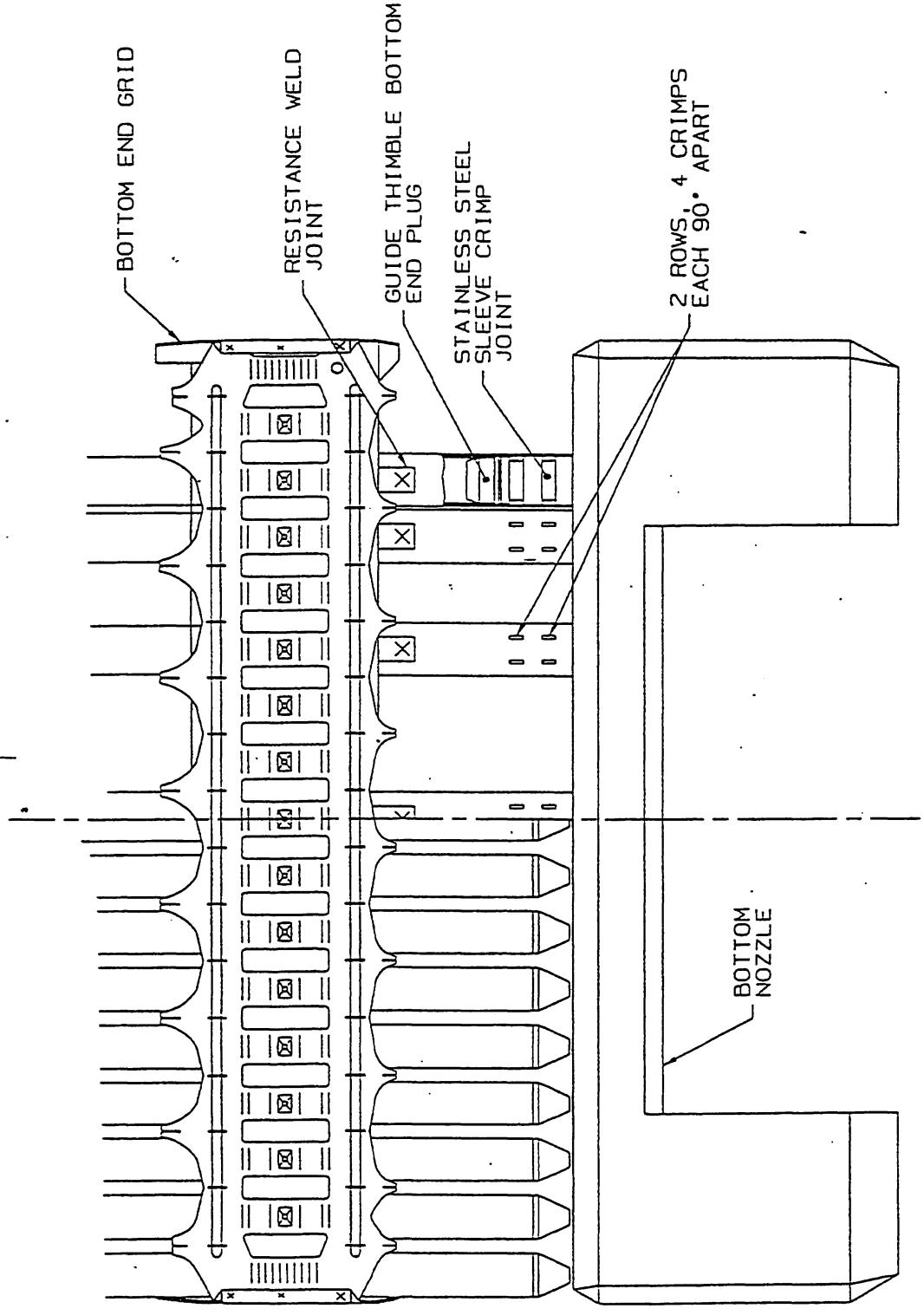

FIGURE 4.5.2-12

INTERMEDIATE GRID ASSEMBLY RESTRAINT SYSTEM

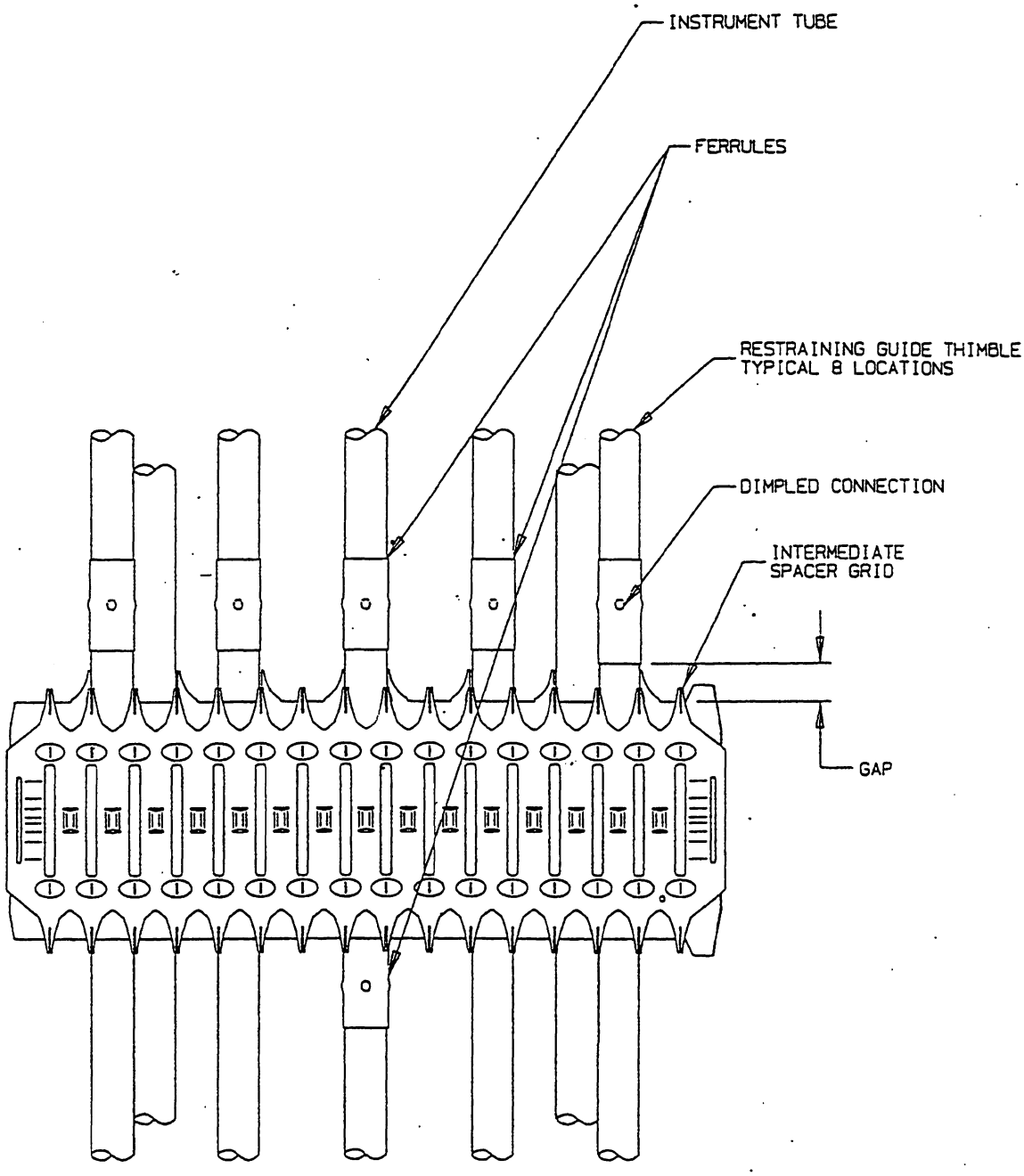

FIGURE 4.5.2-13

MARK-BW GUIDE THIMBLE PATTERN

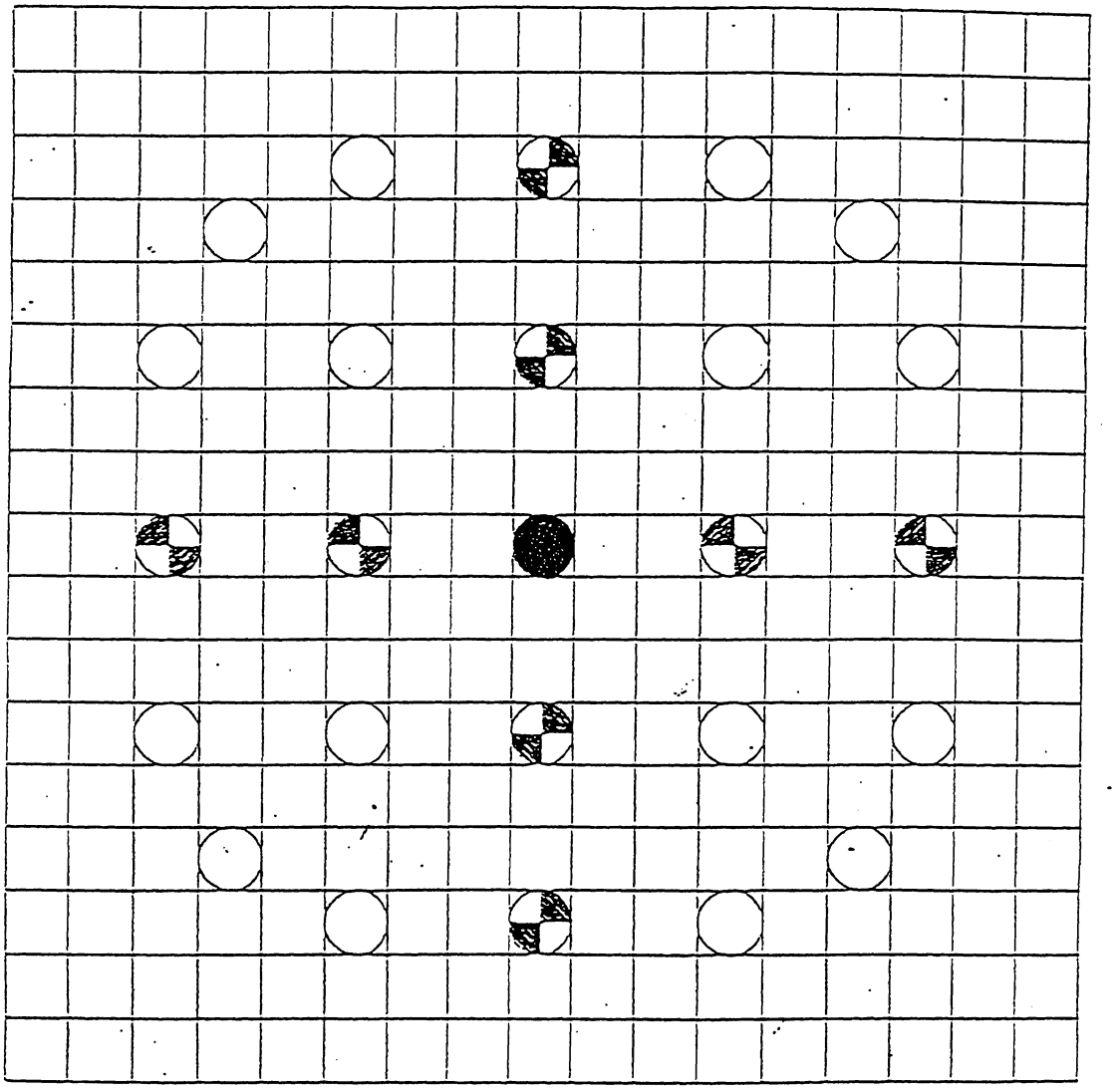

INSTRUMENT SHEATH LOCATION DENOTED BY -

RESTRAINING GUIDE THIMBLE LOCATIONS

DENOTED BY

FIGURE 4.5.2-14

MARK-BW BURNABLE POISON ROD ASSEMBLY

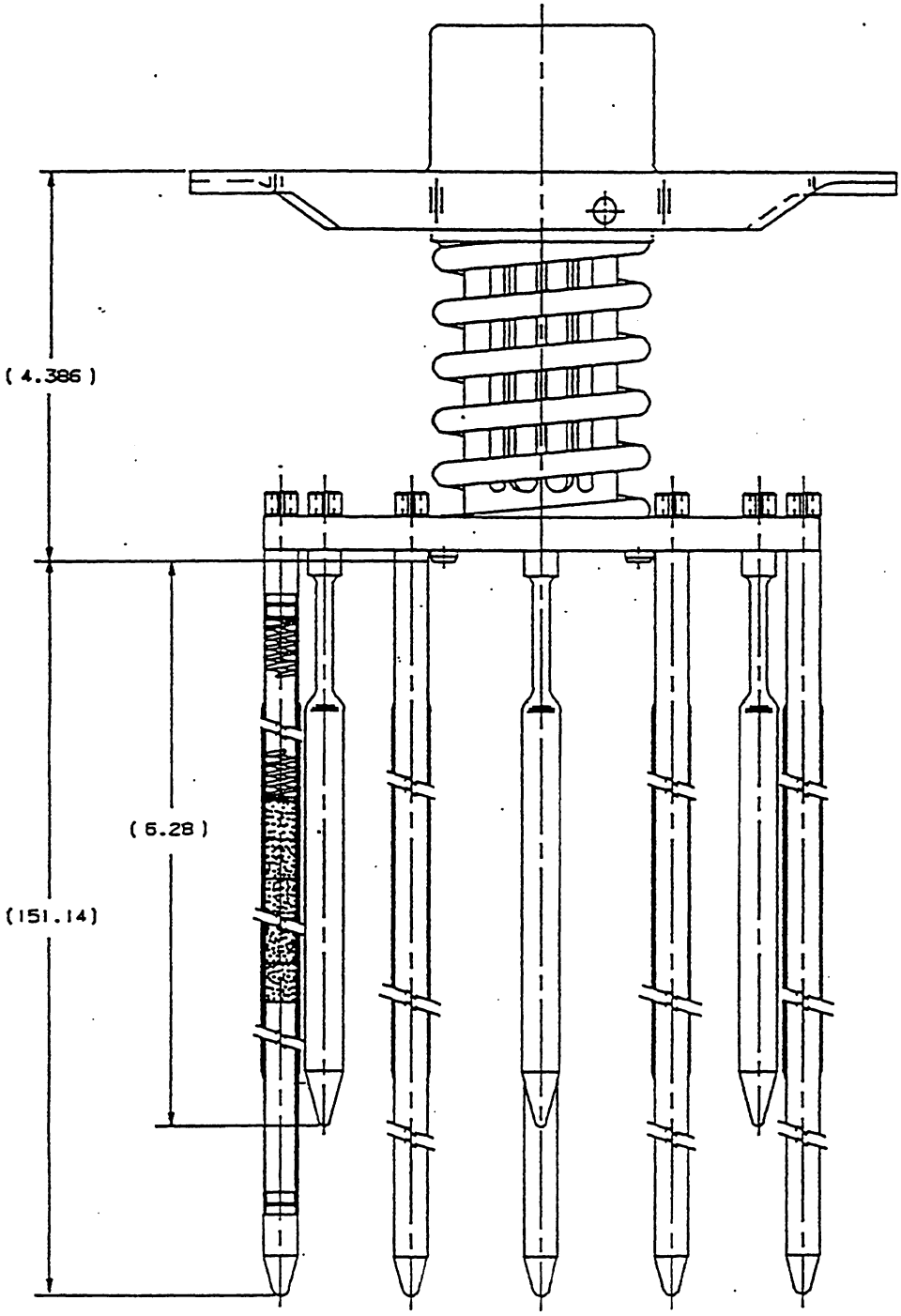

SQN-16

FIGURE 4.5.2-15

MARK-BW BURNABLE POISON ROD*

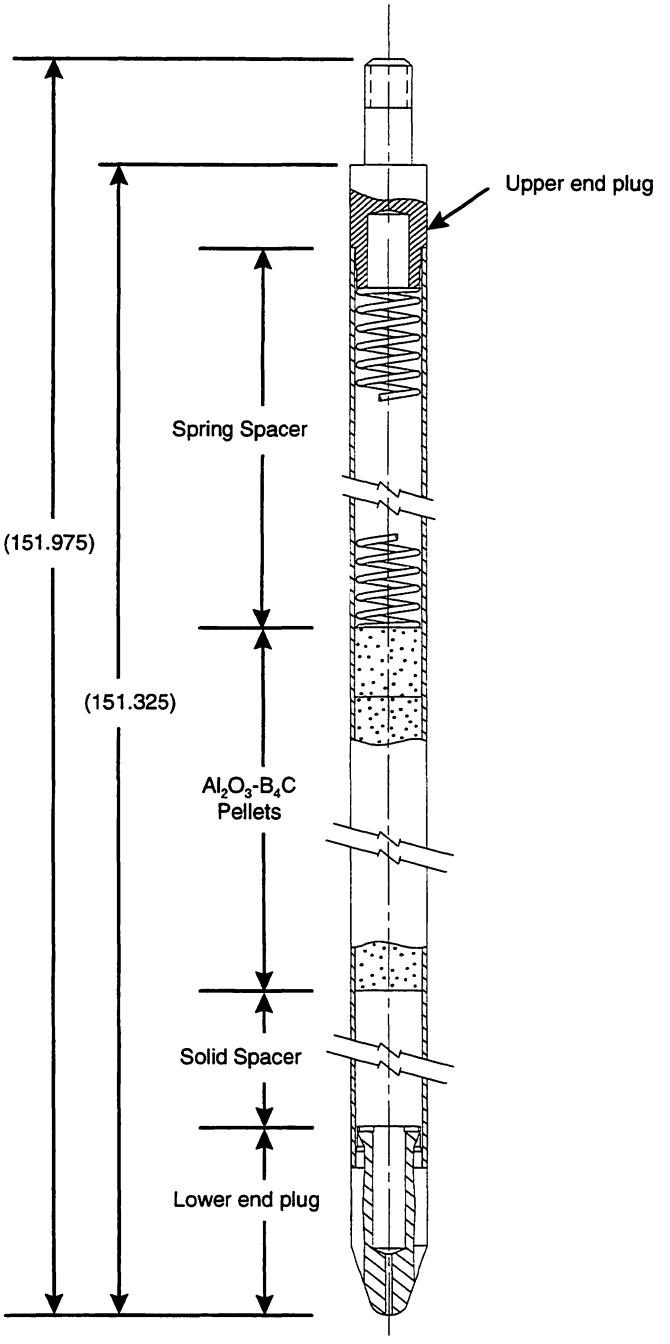

* Dimensions are for reference only

Figure 4.5.2-16a

Advanced W17 HTP Fuel Assembly

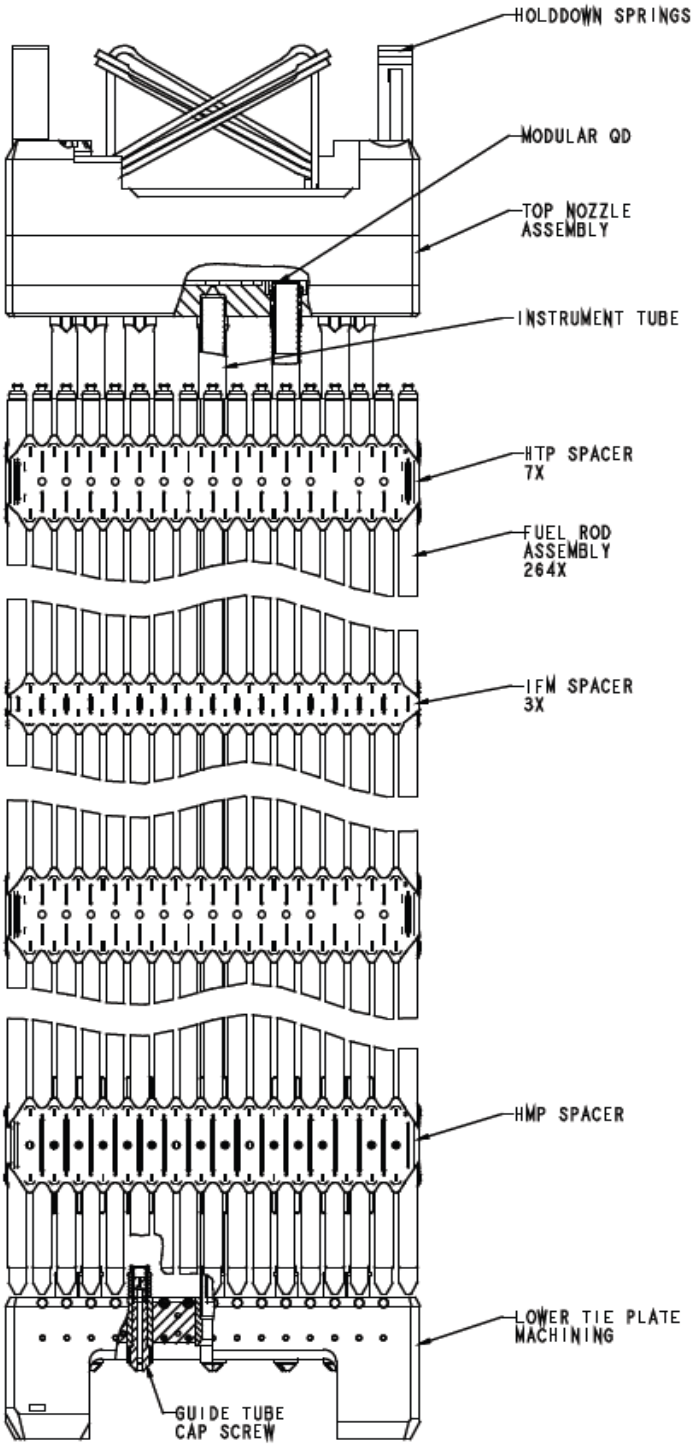

Figure 4.5.2-16b

Advanced W17 HTP Fuel Assembly (top view)

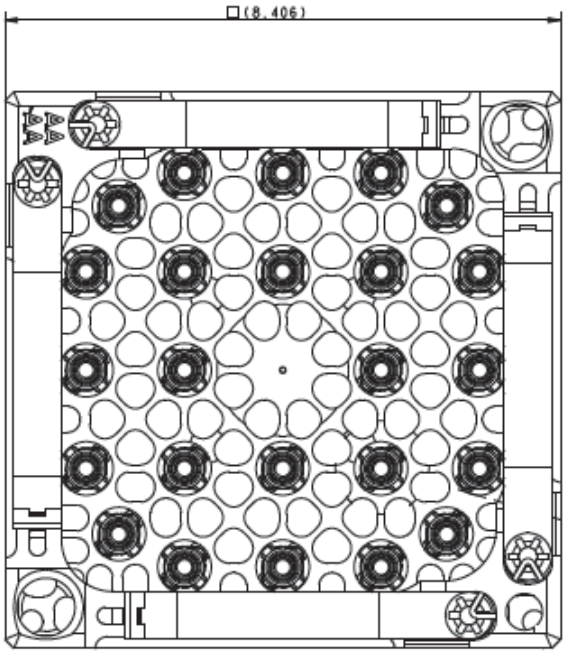

Figure 4.5.2-17

Advanced W17 HTP Fuel Rod Assembly

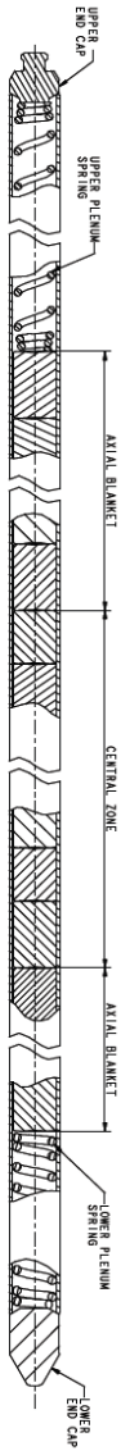

$L_{\text{axial blanket}}$ = 6 " – UO_2
$L_{\text{axial blanket}}$ = 9" – NAF

$L_{\text{central zone}}$ = 132" – UO_2
$L_{\text{central zone}}$ = 126" – NAF

Overall F/R length – 151.80"
UO_2 & NAF

Figure 4.5.2-18

UO_2 Fuel Rod Assembly & NAF Rod Assembly Lower and Upper End Caps

Lower End Cap

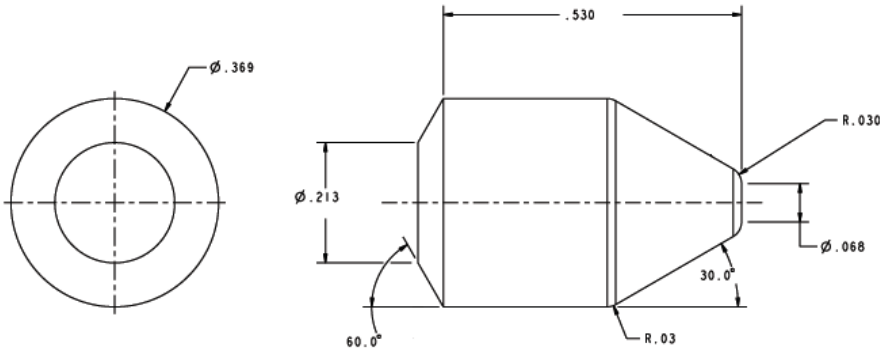

Upper End Cap

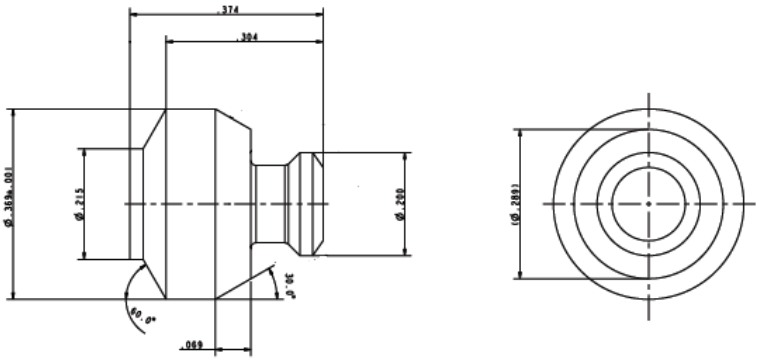

Figure 4.5.2-19

UO_2 Fuel Rod Assembly & NAF Rod Assembly Lower and Upper Plenum Springs

Lower Plenum Spring

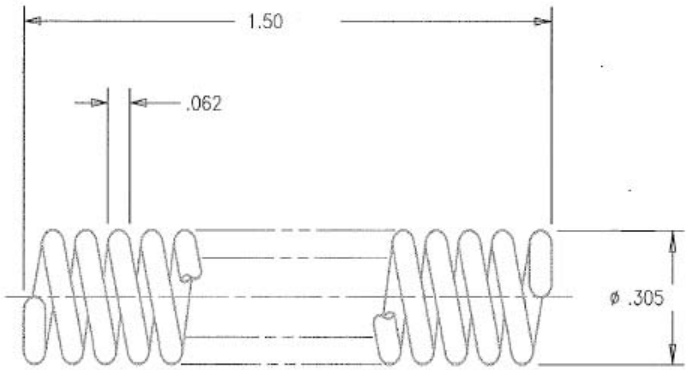

Upper Plenum Spring

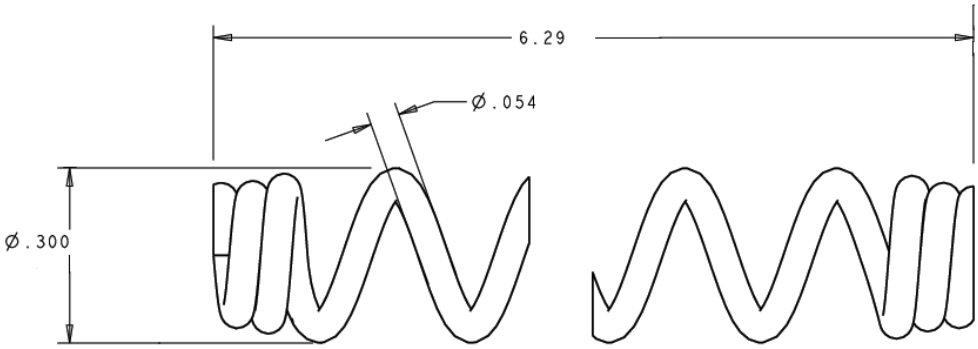

Figure 4.5.2-20

Advanced W17 HTP Bottom Nozzle Assembly

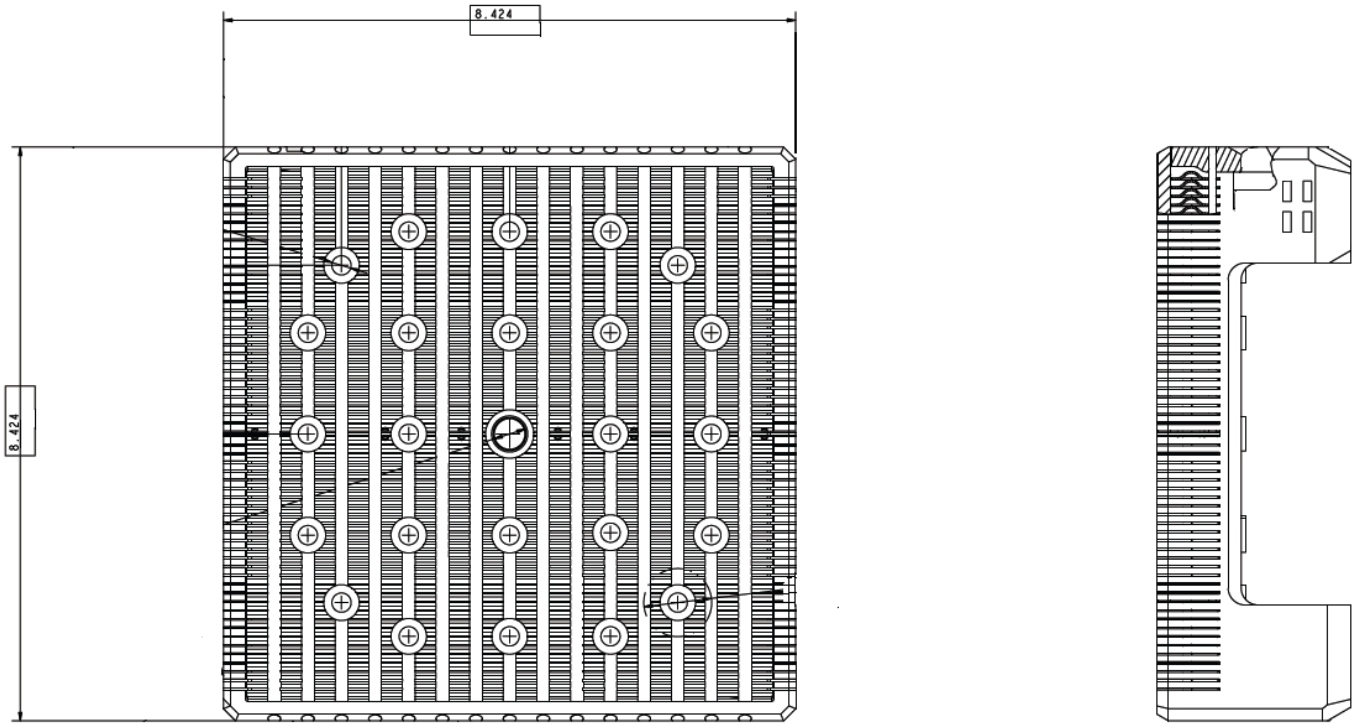

Figure 4.5.2-21

Bottom Nozzle Assembly Guide Tube Attachment

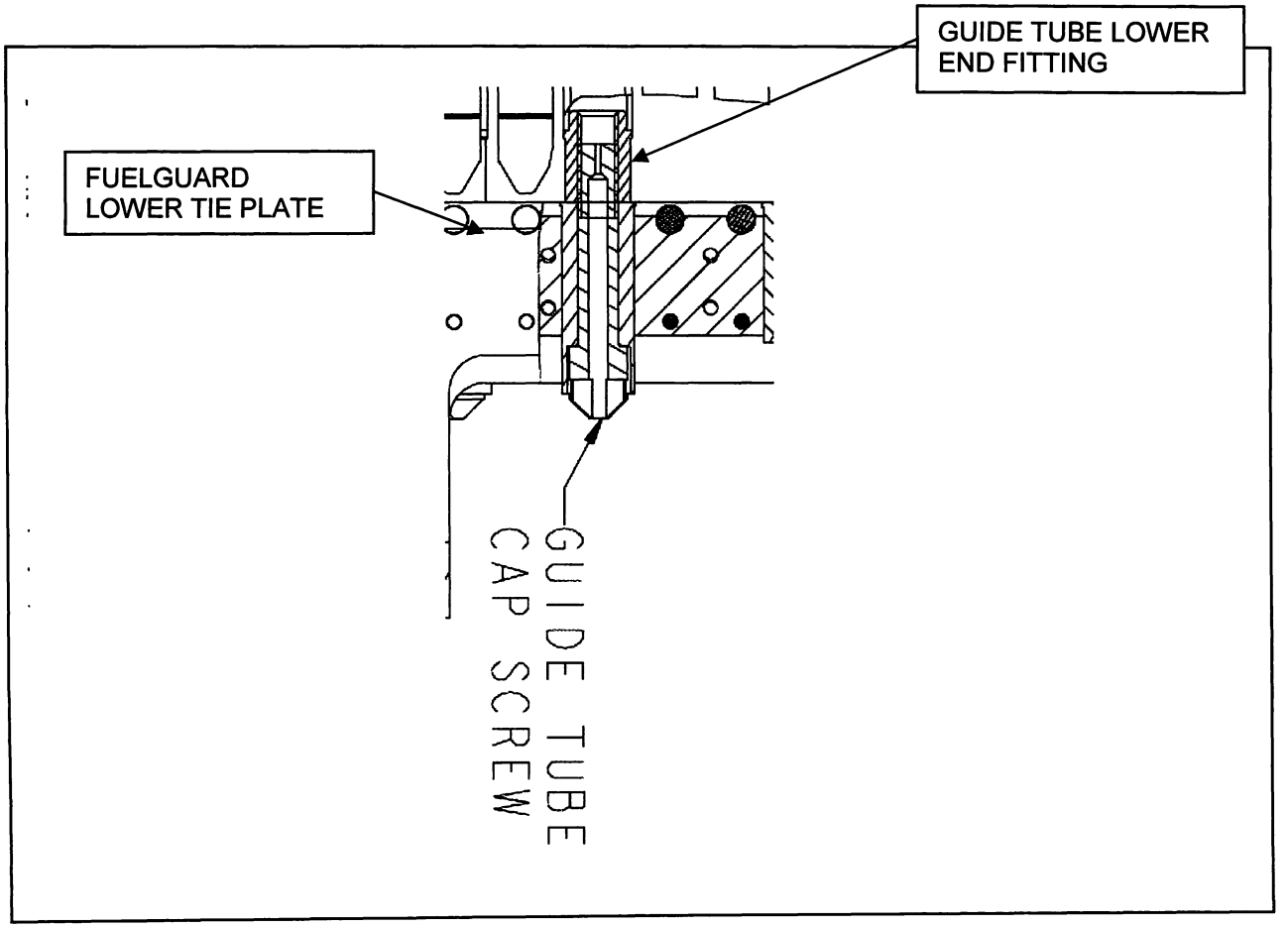

Figure 4.5.2-22
Advanced W17 HTP Top Nozzle Assembly

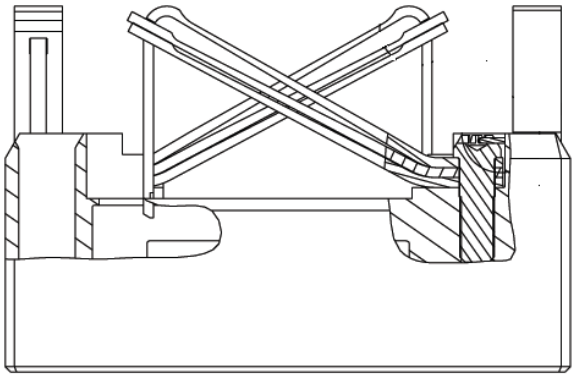

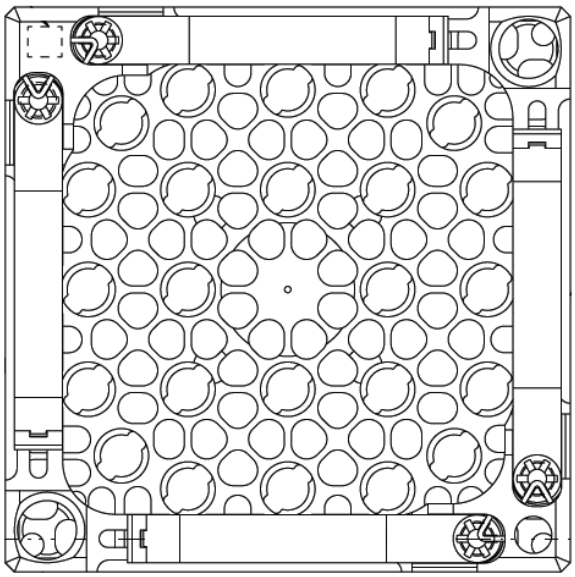

Figure 4.5.2-23

Top Nozzle Assembly Guide Tube Attachment

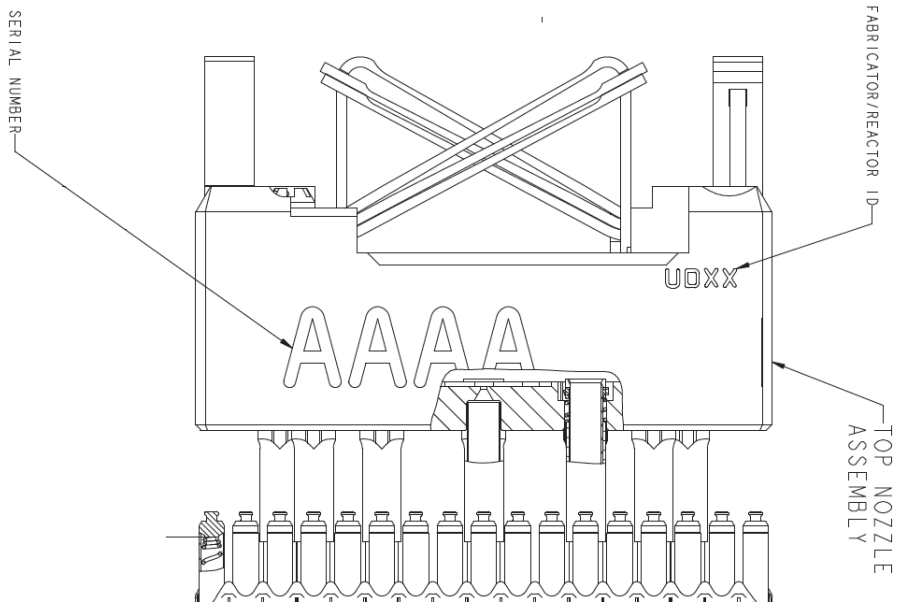

Modular 1/4-turn Quick Disconnect

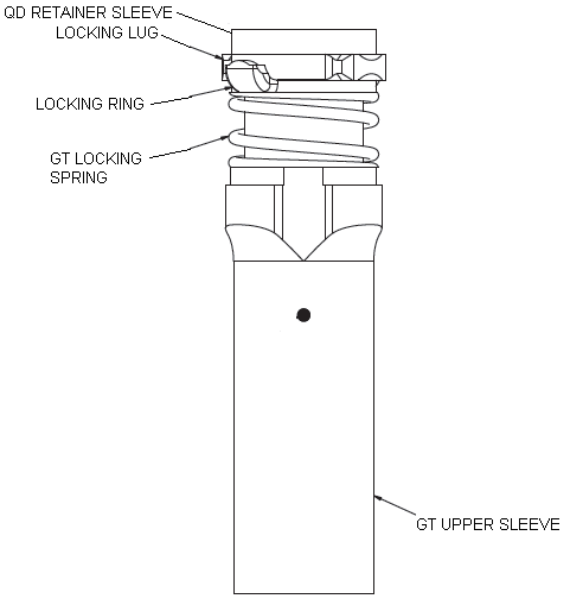

Figure 4.5.2-24
Advanced W17 HTP Spacer Grid Assembly Detail

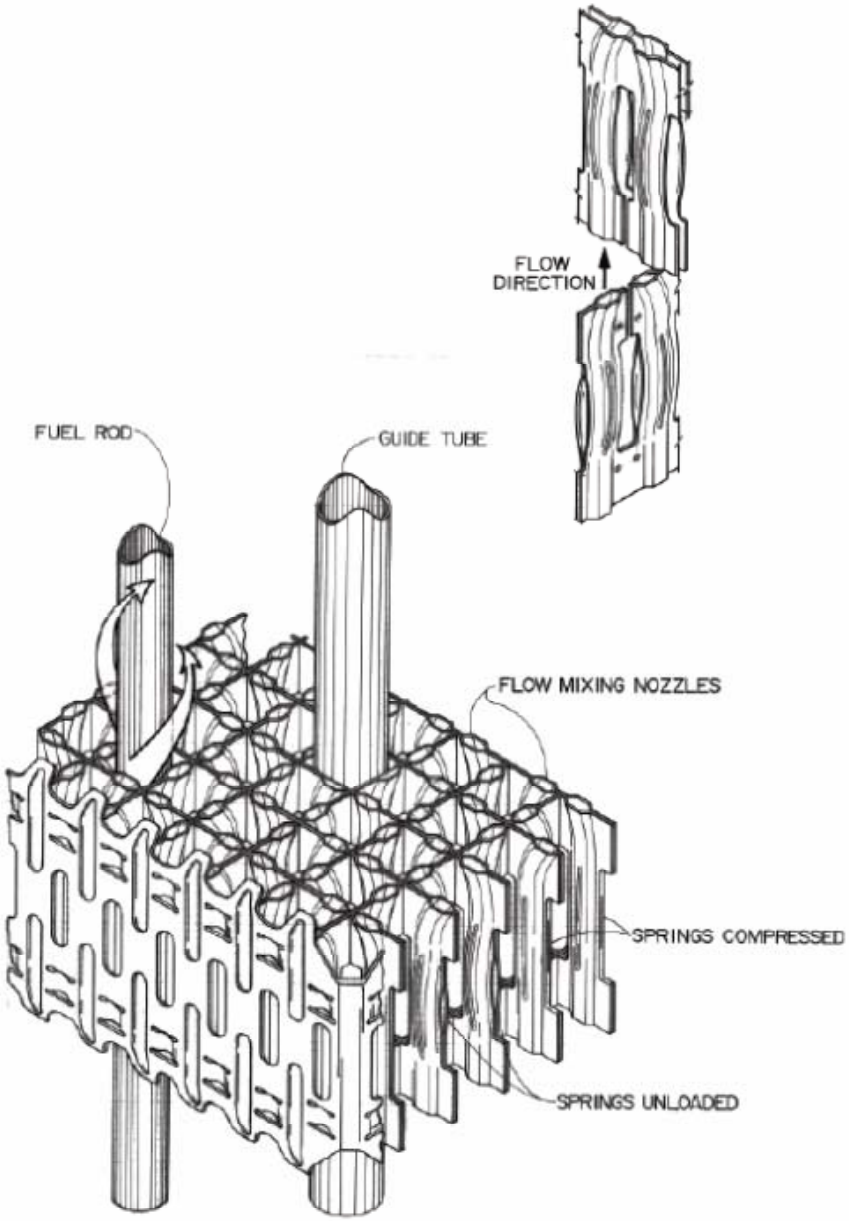

Figure 4.5.2-25

Advanced W17 HMP Spacer Grid Assembly

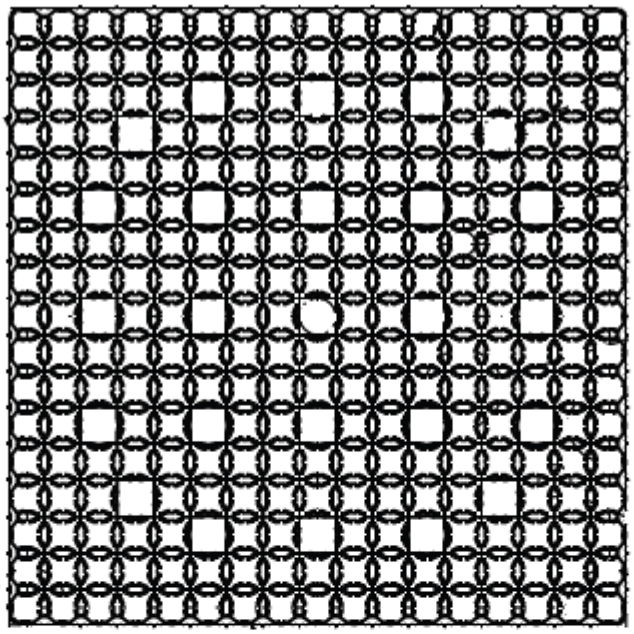

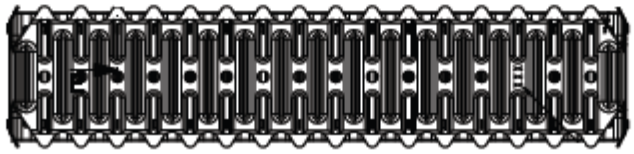

Figure 4.5.2-26
Advanced W17 IFM Spacer Grid Assembly

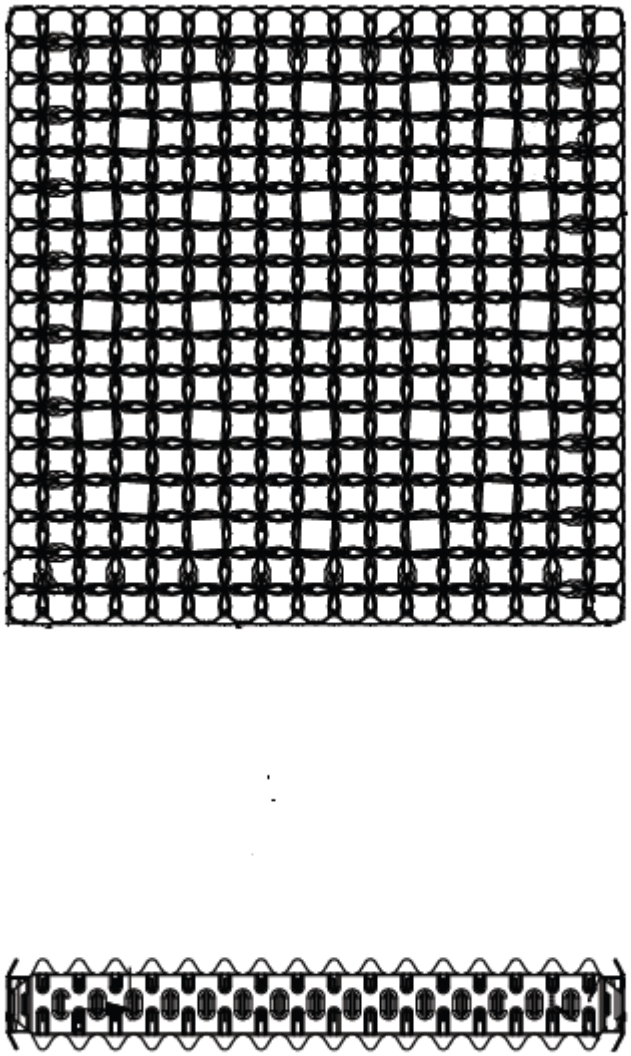

Figure 4.5.2-27

Advanced W17 HTP Cage Assembly Detail

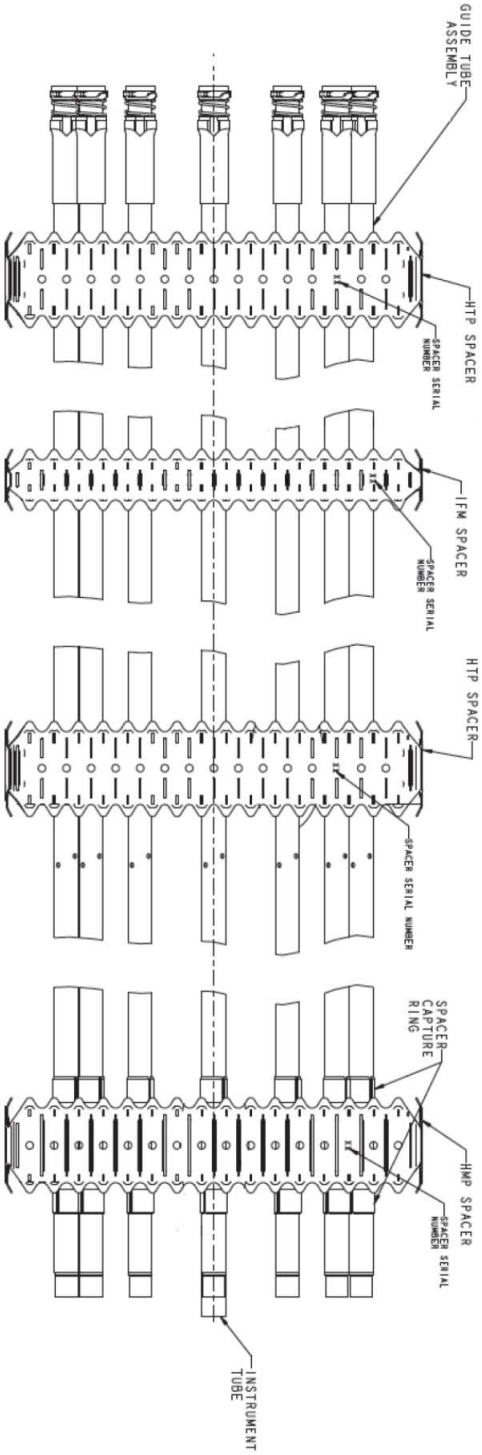

Figure 4.5.4.2-7 Normalized Radial Flow and Enthalpy Distribution at 4-ft Elevation

	H	G	F	E	D	C	B	A
								Key:
8	0.972							$\Delta h/\overline{\Delta h}$
	1.000							$G/\overline{G}$
9	1.309	1.325						
	0.998	0.998						
10	1.228	1.212	1.208					
	0.998	0.999	0.999					
11	1.264	1.196	1.248	1.180				
	0.998	0.999	0.998	0.999				
12	1.041	1.288	1.025	1.238	1.242			
	1.000	0.998	1.000	0.998	0.998			
13	1.274	1.285	1.266	1.259	1.101	0.634		
	0.998	0.998	0.998	0.998	0.999	1.002		
14	0.919	1.105	1.130	1.035	0.456	0.211		
	1.001	0.999	0.999	1.000	1.003	1.004		
15	0.343	0.368	0.371	0.265				
	1.004	1.004	1.004	1.004				

For Radial Power Distribution Near Beginning Of Life Hot Full Power - Full Core Mark-BW

Full Core Advanced W17 HTP, or mixed core of Mark-BW and Advanced W17 HTP

F4542-7thru9

Figure 4.5.4.2-8 Normalized Radial Flow and Enthalpy Distribution at 8-ft Elevation

	H	G	F	E	D	C	B	A
8	0.966 1.004							Key: $\Delta h/\overline{\Delta h}$ $G/\overline{G}$
9	1.307 0.991	1.324 0.991						
10	1.225 0.994	1.210 0.995	1.206 0.995					
11	1.264 0.992	1.194 0.995	1.247 0.992	1.179 0.995				
12	1.038 1.000	1.288 0.990	1.022 1.000	1.237 0.992	1.244 0.991			
13	1.275 0.989	1.286 0.989	1.266 0.990	1.261 0.990	1.106 0.997	0.637 1.013		
14	0.920 1.002	1.108 0.995	1.133 0.994	1.039 0.998	0.459 1.018	0.211 1.025		
15	0.343 1.019	0.368 1.018	0.371 1.018	0.265 1.020				

For Radial Power Distribution Near Beginning Of Life Hot Full Power - Full Core Mark-BW

Full Core Advanced W17 HTP, or mixed core of Mark-BW and Advanced W17 HTP

F4542-7thru9

Figure 4.5.4.2-9 Normalized Radial Flow and Enthalpy Distribution at 12-ft Elevation – Core Exit

	H	G	F	E	D	C	B	A
8	0.978 1.083							Key: $\Delta h/\overline{\Delta h}$ $G/\overline{G}$
9	1.314 0.924	1.330 0.925						
10	1.226 1.059	1.212 0.930	1.204 1.068					
11	1.272 0.928	1.190 0.938	1.253 0.940	1.177 0.952				
12	1.045 1.091	1.288 0.943	1.016 0.964	1.230 0.953	1.242 1.086			
13	1.277 0.945	1.285 1.086	1.260 0.954	1.258 1.093	1.114 0.955	0.633 0.979		
14	0.922 1.104	1.105 0.960	1.127 1.107	1.042 0.974	0.469 1.127	0.206 0.994		
15	0.334 0.997	0.364 1.002	0.363 1.013	0.264 1.028				

For Radial Power Distribution Near Beginning Of Life Hot Full Power - Full Core Mark-BW

Full Core Advanced W17 HTP, or mixed core of Mark-BW and Advanced W17 HTP

F4542-7thru9

TABLE OF CONTENTS

Section	Title	Page
5.0	REACTOR COOLANT SYSTEM AND CONNECTED SYSTEMS	
5.1	SUMMARY DESCRIPTION	5.1-1
5.1.1	SCHEMATIC FLOW DIAGRAM	5.1-8
5.1.2	PIPING AND INSTRUMENTATION DIAGRAM	5.1-8
5.1.3	ELEVATION DRAWING	5.1-8
5.2	INTEGRITY OF THE REACTOR COOLANT SYSTEM BOUNDARY	5.2-1
5.2.1	DESIGN OF REACTOR COOLANT SYSTEM BOUNDARY COMPONENTS	5.2-1
5.2.1.1	Performance Objectives and Design Conditions	5.2-1
5.2.1.2	Normal Condition Pipe Stress Analysis	5.2-9
5.2.1.3	Support Stress Analysis	5.2-10
5.2.1.4	Component Stress Evaluation	5.2-12
5.2.1.5	Computer Codes Used in Analysis	5.2-18
5.2.1.6	Notes on Stress Analysis	5.2-22
5.2.1.7	Reactor Pressure Vessel Support Loads	5.2-25
5.2.2	OVER PRESSURIZATION PROTECTION	5.2-29
5.2.2.1	Location of Pressure-Relief Devices	5.2-29
5.2.2.2	Mounting of Pressure-Relief Devices	5.2-29
5.2.2.3	Report on Overpressure Protection	5.2-29
5.2.2.4	RCS Pressure Control During Low Temperature Operation	5.2-30
5.2.3	GENERAL MATERIAL CONSIDERATIONS	5.2-34
5.2.3.1	Material Specifications	5.2-34
5.2.3.2	Compatibility With Reactor Coolant	5.2-34
5.2.3.3	Compatibility With External Insulation and Environmental Atmosphere	5.2-35
5.2.3.4	Chemistry of Reactor Coolant	5.2-35
5.2.4	FRACTURE TOUGHNESS	5.2-36
5.2.4.1	Compliance With Code Requirements	5.2-36
5.2.4.2	Acceptable Fracture Energy Levels	5.2-38
5.2.4.3	Operating Limitations During Startup and Shutdown	5.2-38
5.2.4.4	Compliance With Reactor Vessel Materials Surveillance Program Requirements	5.2-39
5.2.4.5	Reactor Vessel Annealing	5.2-39
5.2.4.6	Pressurized Thermal Shock (PTS)	5.2-39
5.2.5	AUSTENITIC STAINLESS STEEL	5.2-42
5.2.5.1	Cleaning and Contamination Protection Procedures	5.2-42
5.2.5.2	Solution Heat Treatment Requirements	5.2-43
5.2.5.3	Material Inspection Program	5.2-43
5.2.5.4	Unstabilized Austenitic Stainless Steels	5.2-43
5.2.5.5	Avoidance of Sensitization	5.2-43
5.2.5.6	Retesting Unstabilized Austenitic Stainless Steels Exposed to Sensitizing Temperatures	5.2-45
5.2.5.7	Control of Delta Ferrite	5.2-45
5.2.6	PUMP FLYWHEEL	5.2-46

TABLE OF CONTENTS

Section	Title	Page
5.2.7	RCPB LEAKAGE DETECTION SYSTEMS	5.2-47
5.2.7.1	Methods of Detection	5.2-47
5.2.7.2	Deleted (Combined into 5.2.7.1)	5.2-50
5.2.7.3	Limits for Reactor Coolant Leakage	5.2-50
5.2.7.4	Characteristics of the Leakage Detection Methods	5.2-50
5.2.7.5	Maximum Allowable Identified Total Leakage	5.2-54
5.2.7.6	Differentiation Between Identified and Unidentified Leaks	5.2-54
5.2.7.7	Sensitivity and Operability Tests	5.2-55
5.2.7.8	ECCS Intersystem Leakage	5.2-55
5.2.8	INSERVICE INSPECTION PROGRAM	5.2-56
5.2.8.1	Provisions for Access to Reactor Coolant Pressure Boundary	5.2-57
5.2.8.2	Equipment for Inservice Inspection	5.2-58
5.2.8.3	Recording and Comparing Data	5.2-58
5.2.8.4	Reactor Vessel Acceptance Standards	5.2-59
5.2.9	BOROATED WATER CORROSION (BWC) PROGRAM DESCRIPTION	5.2-60
5.2.10	REFERENCES	5.2-60
5.3	THERMAL HYDRAULIC SYSTEM DESIGN	5.3-1
5.3.1	ANALYTICAL METHODS AND DATA	5.3-1
5.3.2	OPERATING RESTRICTIONS ON PUMPS	5.3-1
5.3.3	(BWR)	5.3-1
5.3.4	TEMPERATURE-POWER OPERATING MAP	5.3-1
5.3.5	LOAD FOLLOWING CHARACTERISTICS	5.3-1
5.3.6	TRANSIENT EFFECTS	5.3-1
5.3.7	THERMAL AND HYDRAULIC CHARACTERISTICS SUMMARY TABLE	5.3-1
5.4	REACTOR VESSEL AND APPURTENANCES	5.4-1
5.4.1	DESIGN BASES	5.4-1
5.4.1.1	Codes and Specifications	5.4-1
5.4.1.2	Design Transients	5.4-1
5.4.1.3	Protection Against Non-Ductile Failure	5.4-2
5.4.2	DESCRIPTION	5.4-2
5.4.2.1	Fabrication Processes	5.4-2
5.4.2.2	Protection of Closure Studs	5.4-3
5.4.3	EVALUATION	5.4-3
5.4.3.1	Normal	5.4-3
5.4.3.2	Fatigue Analysis Based on Transient Stresses	5.4-4

TABLE OF CONTENTS

Section	Title	Page
5.4.3.3	Thermal Stresses Due to Gamma Heating	5.4-4
5.4.3.4	Thermal Stresses Due to Loss of Coolant Accident (LOCA)	5.4-4
5.4.3.5	Stresses in UHI Adaptors	5.4-5
5.4.3.6	Heatup and Cooldown	5.4-5
5.4.3.7	Reactor Vessel Material Surveillance Program Requirements	5.4-5
5.4.3.8	Capability for Annealing the Reactor Vessel	5.4-13
5.4.4	TESTS AND INSPECTIONS	5.4-13
5.4.4.1	Ultrasonic Examinations	5.4-13
5.4.4.2	Penetrant Examinations	5.4-14
5.4.4.3	Magnetic Particle Examination	5.4-14
5.4.4.4	Reactor Vessel Inservice Inspection	5.4-14
5.4.5	REFERENCES	5.4-15
5.5	COMPONENT AND SUBSYSTEM DESIGN	5.5-1
5.5.1	REACTOR COOLANT PUMPS	5.5-1
5.5.1.1	Design Bases	5.5-1
5.5.1.2	Design Description	5.5-1
5.5.1.3	Design Evaluation	5.5-2
5.5.1.4	Tests and Inspections	5.5-6
5.5.2	STEAM GENERATOR	5.5-9
5.5.2.1	Design Bases	5.5-9
5.5.2.2	Design Description5.5-9	
5.5.2.3	Design Evaluation	5.5-10
5.5.2.4	Tests and Inspections	5.5-15
5.5.3	REACTOR COOLANT PIPING	5.5-16
5.5.3.1	Design Bases	5.5-16
5.5.3.2	Design Description	5.5-16
5.5.3.3	Design Evaluation	5.5-18
5.5.3.4	Tests and Inspections	5.5-19
5.5.4	MAIN STEAM LINE FLOW RESTRICTORS	5.5-19
5.5.5	MAIN STEAM LINE ISOLATION SYSTEM	5.5-19
5.5.6	REACTOR CORE ISOLATION COOLING SYSTEM	5.5-19
5.5.7	RESIDUAL HEAT REMOVAL SYSTEM	5.5-19
5.5.7.1	Design Bases	5.5-19
5.5.7.2	System Description	5.5-20
5.5.7.3	Design Evaluation	5.5-25
5.5.7.4	Tests and Inspections	5.5-26
5.5.8	REACTOR COOLANT CLEANUP SYSTEM	5.5-26
5.5.9	MAIN STEAM LINE AND FEEDWATER PIPING	5.5-26

TABLE OF CONTENTS

Section	Title	Page
5.5.10	PRESSURIZER	5.5-26
5.5.10.1	Design Bases	5.5-26
5.5.10.2	Design Description	5.5-27
5.5.10.3	Design Evaluation	5.5-28
5.5.10.4	Tests and Inspections	5.5-31
5.5.11	PRESSURIZER RELIEF TANK	5.5-31
5.5.11.1	Design Bases	5.5-31
5.5.11.2	Design Description	5.5-31
5.5.11.3	Design Evaluation	5.5-32
5.5.12	VALVES	5.5-32
5.5.12.1	Design Bases	5.5-32
9.5.12.2	Design Description	5.5-33
5.5.12.3	Design Evaluation	5.5-33
5.5.12.4	Tests and Inspections	5.5-34
5.5.13	SAFETY AND RELIEF VALVES	5.5-34
5.5.13.1	Design Bases	5.5-34
5.5.13.2	Design Description	5.5-34
5.5.13.3	Design Evaluation	5.5-35
5.5.13.4	Tests and Inspections	5.5-35
5.5.14	COMPONENT SUPPORTS	5.5-35
5.5.14.1	Design Bases	5.5-35
5.5.14.2	Description	5.5-35
5.5.14.3	Evaluation	5.5-36
5.5.14.4	Tests and Inspections	5.5-37
5.5.15	REACTOR COOLANT SYSTEM HEAD VENTS (RCSHVs)	5.5-37
5.5.16	REFERENCES	5.5-38
5.6	INSTRUMENTATION APPLICATION	5.6-1

LIST OF TABLES

Number	Title
5.1-1	System Design and Operating Parameters
5.2-1	Load Combinations and Operating Conditions
5.2.1-1	Summary of Reactor Coolant System Design Transients
5.2.1-22	Faulted Condition Loads for the Reactor Coolant Pump Foot
5.2.1-23	Ratio Between Umbrella Loads and Actual Loads
5.2.1-24	Operating and Inactive Valves in the Reactor Coolant System Boundary
5.2-2	Loading Conditions and Stress Limits: Class A Components
5.2.2-1	Relief Valve Discharges to the Pressurizer Relief Tank
5.2.2-2	Reactor Coolant System Design Pressure Settings
5.2-3	Faulted Condition Stress Limits for Class A Components
5.2.3-1	Reactor Coolant Pressure Boundary Materials Class A Primary Components
5.2.3-2	Reactor Coolant Pressure Boundary Materials Auxiliary Components
5.2.3-3	Reactor Coolant Water Chemistry Specification
5.2-4	Loading Conditions and Stress Limits: Pressure Piping
5.2.4-1	Mechanical Property Data for the Closure Head Bolting Material of the Sequoyah Unit No. 1 and 2 Reactor Vessels
5.2.4-2	Pre-irradiation Charpy V-Notch Impact Data for the Sequoyah Unit No. 1 Lower Shell Forgoing 04, HT 980919/281587 (Axial Direction)
5.2.4-3	Pre-irradiation Charpy V-Notch Impact Data for the Sequoyah Unit No. 1 Intermediate Shell Forgoing 05, HT 980807/281439 (Axial Direction)
5.2.4-4	Pre-irradiation Charpy V Notch Impact Properties for the Sequoyah Unit No. 2 Reactor Pressure Vessel Core Region Weldment
5.2.4-5	Pre-irradiation Charpy V Notch Impact Properties for the Sequoyah Unit No. 2 Reactor Pressure Vessel Core Heat Affected Zone Weldment (Forging 05 Side)
5.2.4-6	Pre-irradiation Charpy V Notch Impact Properties for the Sequoyah Unit No. 2 Reactor Pressure Vessel Intermediate Shell Forging 05 HT (Axial Orientation)
5.2.4-7	Pre-irradiation Charpy V Notch Impact Properties for the Sequoyah Unit No. 2 Reactor Pressure Vessel Lower Shell Forging 04 Ingot No. 4994 (Axial Orientation)
5.2.4-8	Sequoyah Units 1 and 2 Reactor Vessel Toughness Data

LIST OF TABLES

Number	Title
5.2-5	Loading Conditions and Stress Limits: Equipment Supports
5.2.5-1	Reactor Vessel Internals Materials Associated With Emergency Core Cooling
5.4.2-1	Reactor Vessel Design Parameters
5.4.4-1	Reactor Vessel Quality Assurance Program
5.5.1-1	Reactor Coolant Pump Design Parameters
5.5.1-2	Reactor Coolant Pump Quality Assurance Program
5.5.2-1	Steam Generator Design Data
5.5.2-2	Steam Generator Quality Assurance Program During Construction
5.5.3-1	Reactor Coolant Piping Quality Assurance Program
5.5.7-1	Design Bases for Residual Heat Removal System Operations
5.5.7-2	Residual Heat Removal System Component Data
5.5.10-1	Pressurizer Design Data
5.5.10-2	Pressurizer Quality Assurance Program
5.5.11-1	Pressurizer Relief Tank Design Data
5.5.12-1	Reactor Coolant System Boundary Valve Design Parameters
5.5.13-1	Pressurizer Valves Design Parameters

LIST OF FIGURES

Number	Title
5.1-1	Flow Diagram, Reactor Coolant System
5.1-2	Reactor Coolant Pump Logic
5.1-3	Pump Head - Flow Characteristics
5.2.1-4	Reactor Coolant Loop/Supports System Structural Model for Dynamic Analysis
5.2.1-5	Steam Generator Lower Lateral Support Model
5.2.1-6	Steam Generator Upper Lateral Support Model
5.2.1-8	Primary - Secondary Boundary Components Shell Locations of Stress Investigations
5.2.1-9	Primary and Secondary Hydrostatic Test Stress History for the Center Hole Location
5.2.1-10	Plant Heat Up and Loading Operational Transients (with Steady-State Plateau) Stress History for the Hot Side Center Hole Location
5.2.1-11	Large Step Load Decrease and Loss of Flow Stress History for the Hot Side Center Hole Location
5.2.1-12	Reactor Coolant Pump Casing With Support Feet
5.2.1-13	Reactor Coolant Pump Support Feet
5.2.1-14	THRUST Reactor Coolant Loop Model Showing Hydraulic Force Locations
5.2.1-15	Mathematical Model for Horizontal Response
5.2.1-16	Mathematical Model for Vertical Response
5.2.6-1	K_{Id} Lower Bound Fracture Toughness A533V (Reference WCAP 7623) Grade B Class 1
5.2.7-1	Reactor Building - Floor and Equipment Drains
5.3.4-1	Reactor Coolant System Temperature vs Percent Power Map

LIST OF FIGURES

Number	Title
5.4.2-1	Welding Detail for UHI Head Adaptor
5.4.3-1	Specimen Guide to Thermal Shield Attachment
5.4.3-2	Surveillance Capsule Elevation View
5.4.3-3	Surveillance Capsule Plan View
5.5.1-1	Reactor Coolant Controlled Leakage Pump
5.5.1-2	Reactor Coolant Pump Estimated Performance Characteristic
5.5.1-3	Reactor Coolant Pump Spool Piece and Motor Support Stand
5.5.2-1a & b	Steam Generator
5.5.7-1	Flow Diagram, Residual Heat Removal System
5.5.7-2	Residual Heat Removal Pump Logic
5.5.10-1	Pressurizer
5.5.14-1	Reactor Vessel Supports
5.5.14-2	Ice Condenser Steam Generator Supports
5.5.14-3	Reactor Coolant Pump Supports
5.5.14-4	Pressurizer Support
5.5.14-5	Crossover Leg Restraints

5.0 REACTOR COOLANT SYSTEM AND CONNECTED SYSTEMS

5.1 SUMMARY DESCRIPTION

The Reactor Coolant System (RCS) shown in Figure 5.1-1 consists of four similar heat transfer loops connected in parallel to the reactor pressure vessel. Each loop contains a reactor coolant pump, steam generator and associated piping and valves. In addition, the system includes a pressurizer, a pressurizer relief tank, and interconnecting piping and instrumentation. All the principal components are located in the containment building.

During operation, the RCS transfers the heat generated in the core to the steam generators where steam is produced to drive the turbine generator. Borated demineralized water is circulated in the RCS at a flow rate and temperature consistent with achieving the reactor core thermal-hydraulic performance (See Section 4.4). The water also acts as a neutron moderator and reflector, and as a solvent for the neutron absorber used in chemical shim control.

The RCS pressure boundary provides a barrier against the release of radioactivity generated within the reactor, and is designed to ensure a high degree of integrity throughout the life of the plant. (See Section 5.2)

RCS pressure is controlled by the pressurizer where water and steam are maintained in equilibrium by electrical heaters and/or water sprays. Steam can be formed (by the heaters) or condensed (by the pressurizer spray) to minimize pressure variations due to contraction and expansion of the reactor coolant. Spring-loaded safety valves and power operated relief valves are connected to the pressurizer and discharge to the pressurizer relief tank, where the steam is condensed and cooled by mixing with water.

The extent of the RCS is defined as:

1. The reactor vessel including control rod drive mechanism housings

2. The reactor coolant side of the steam generators

3. Reactor coolant pumps

4. A pressurizer

5. Safety and relief valves

6. The interconnecting piping, valves and fittings between the principal components listed above

7. The Reactor Coolant System auxiliary and connecting piping as identified in Section 5.5.3.2.

Reactor Coolant System Components

Reactor Vessel

The reactor vessel is cylindrical, with a welded hemispherical bottom head and a removable, flanged and gasketed, hemispherical upper head. The vessel contains the core, core supporting structures, control rods and other parts directly associated with the core. The upper head is provided with penetrations for the Upper Head Injection system, CRDMs instrumentation, and vents. The lower head is provided with penetration for the incore neutron monitors.

The vessel has inlet and outlet nozzles located in a horizontal plane just below the reactor vessel flange but above the top of the core. Coolant enters the vessel through the inlet nozzles and flows down the core barrel-vessel wall annulus, turns at the bottom and flows up through the core to the outlet nozzles.

Original Steam Generators (Historical) and Replacement Steam Generators

Both the original steam generators (OSGs) and replacement steam generators (RSGs) are vertical shell and U-tube evaporators with integral moisture separating equipment. The reactor coolant flows through the inverted U-tubes, entering and leaving through the nozzles located in the hemispherical bottom head of the steam generator. Steam is generated on the shell side and flows upward through the moisture separators to the outlet nozzle at the top of the steam generator.

Reactor Coolant Pumps

The reactor coolant pumps are single-speed centrifugal units driven by water-to-air-cooled, three-phase induction motors. The shaft is vertical with the motor mounted above the pumps. A flywheel on the shaft above the motor provides additional inertia to extend pump coast down. The inlet is at the bottom of the pump; discharge is on the side. The reactor coolant pump logic is shown in Figure 5.1-2.

Piping

The Reactor Coolant loop piping is specified in sizes consistent with system requirements.

The inside diameter of the hot leg is 29 inches and the cold leg return line to the reactor vessel is 27-1/2 inches. The piping between the steam generator and the pump suction is increased to 31 inches in diameter to reduce pressure drop and improve flow conditions to the pump suction.

Pressurizer

The pressurizer is a vertical, cylindrical vessel with hemispherical top and bottom heads. Electrical heaters are installed through the bottom head of the vessel while the spray nozzle, relief and safety valve connections are located in the top head of the vessel.

Pressurizer Relief Tank (PRT)

The pressurizer relief tank is a horizontal, cylindrical vessel with elliptical ends. Steam from the pressurizer safety and relief valves is discharged into the pressurizer relief tank through a sparger pipe under the water level. This condenses and cools the steam by mixing it with water. The PRT is equipped with two rupture discs which release to the containment.

Safety and Relief Valves

Three safety valves and two PORVs, connected to the top of the pressurizer, are provided to protect against overpressurization. The pressurizer safety valves are of the totally enclosed pop-type. The safety valves are spring-loaded, self activating with back pressure compensation. The power operated relief valves (PORV) are solenoid type valves which are operated automatically or manually from the MCR.

Block Valve Power Operated Relief Valve

One block valve per PORV is provided upstream of the PORV (i.e., between the PORV and the pressurizer). The block valves are used to isolate the solenoid operated relief valve for repair if excessive leakage occurs and to meet RCPB requirements. The respective block valves and PORVs are powered by opposite trains to assure reliable isolation during a stuck open PORV event.

Reactor Coolant System Performance Characteristics

Tabulations of important design and performance characteristics of the RCS are provided in Table 5.1-1.

Reactor Coolant Flow

The reactor coolant flow, a major parameter in the design of the system and its components, was established with a detailed design procedure supported by operating plant performance data, by pump model test and analysis, and by pressure drop tests and analyses of the reactor vessel and fuel assemblies. Data from all operating plants have indicated that the actual flow was well above the flow specified for the thermal design of the plant. By applying the design procedure described below, it was possible to specify the expected operating flow with reasonable accuracy.

Initially, three flow rates were used as the design basis for the reactor coolant system flow rate. These flow rates were based on various plant design considerations. The definitions of these flows are presented in the following paragraphs, and the application of the definitions is illustrated by the system and pump hydraulic characteristics on Figure 5.1-3.

The basis for the current reactor coolant system thermal design flow is also discussed under Thermal Design Flow.

Best Estimate Flow

The best estimate flow was the most likely value for the actual plant operating condition. This flow was based on the best estimate of the reactor vessel, steam generator and piping flow resistance, and on the best estimate of the reactor coolant pump head, with no uncertainties assigned to either the system flow resistance or the pump head. System pressure losses based on best estimate flow are presented in Table 5.1-1. Although the best estimate flow is the most likely value to be expected in operation, more conservative flow rates are applied in the thermal and mechanical designs.

Thermal Design Flow

The thermal design flow represents the minimum protected flow and is the basis for the reactor core thermal performance, the steam generator thermal performance, and the nominal plant parameters used throughout the design. To provide the required margin, the thermal design flow accounts for the uncertainties in reactor vessel, steam generator and piping flow resistance. The combination of these uncertainties, which includes a conservative estimate of the pump discharge flow resistance, was equivalent to increasing the best estimate reactor coolant system flow resistance by approximately 18 percent. The intersection of this conservative flow resistance with the best estimate pump curve, as shown in Figure 5.1-3, established the original design basis thermal design flow. This procedure provided a design flow margin for thermal design. The thermal design flow was confirmed by pre-operational test W.16.

The thermal design flow also represents the Technical Specification minimum operability flow which has been reduced by the maximum flow measurement uncertainty (3.5 percent). For Fuel Cycles 1 through 8, the thermal design flow served as the basis for core specific reload fuel cycle design and analysis. Beginning with the Cycle 9 operation of each unit, a statistical thermal-hydraulic analysis method was employed. With this statistical methodology, flow uncertainty is accounted for through the use of a statistically adjusted DNBR limit such that the Technical Specification minimum operability flow serves as the basis for the reload design. Both the thermal design flow and the Technical Specification minimum operability flow contain sufficient margin to allow for future increases in loop flow resistance due to steam generator tube plugging.

The thermal design flow and minimum operability flow are contained in Table 5.1-1 along with important design parameters based on the thermal design flow. Flow margin to the operability limit is verified a minimum of once every eighteen months through plant Surveillance Instructions and Test Instructions.

Mechanical Design Flow

The original design basis mechanical design flow was the conservatively high flow used in the mechanical design of the reactor vessel internals and fuel assemblies. To assure that a conservatively high flow was specified, the mechanical design flow was based on a reduced system resistance (90 percent of best estimate) and on the maximum uncertainty on pump head capability (105.5 percent of best estimate for machined pump impellers). The intersection of this flow resistance with the higher pump curve, as shown on Figure 5.1-3, established the original design basis mechanical design flow. The resulting flow is greater than the best estimate flow (101,700 gpm).

Beginning with the Cycle 9 operation of each unit, a more empirical approach was followed in establishing the mechanical design flow used in the determination of hydraulic loads in the fuel. Actual measured flow rates from the previous three cycles for each unit were used to establish a mechanical design flow rate of 410,000 gpm for fuel analyses. This flow represented a design value that exceeded the highest measured flow by over 6 percent. Subsequent to Cycle 9 operation, the reload fuel design was changed to contain low pressure drop fuel nozzles. Based on the nozzle changes, the mechanical design flow limit for those assemblies increased from 410,000 gpm to 420,000 gpm (see References 1 and 2).

Beginning with Cycle 15 operation for both units, the deterministic methodology used to establish the fuel mechanical design flow limit of 420,000 gpm was replaced with the statistical analysis methodology summarized in Reference 3. The statistical methodology was used to support a reduction in fuel assembly spring holddown force to eliminate excessive compression loads which were contributing to assembly distortion during operation. Revised holddown forces were established using a nominal primary system flow rate which bounds all measured flow rates for the previous six operating cycles for each unit. Based on the results of the statistical analysis, the modified fuel assembly springs will provide adequate holddown forces for primary system flows up to 404,000 gpm. Based on the assembly spring modifications, the 404,000 gpm value is the current fuel assembly mechanical design flow of record (see Reference 4). It should be noted that the mechanical design flow rate of 404,000 gpm is a nominal value and the uncertainty of 3.5% is addressed separately in the analyses. Therefore, the measured plant flow can be compared directly to the 404,000 gpm value without adjustment provided the actual measured flow uncertainty is less than or equal to the 3.5% value. The mechanical design flow used for all other RCS components remains 423,000 gpm.

Pump overspeed, due to a turbine-generator overspeed of 20 percent, resulted in a peak reactor coolant flow of 120 percent of the mechanical design flow. The overspeed condition is applicable only to operating conditions when the reactor and turbine-generator are at power.

Interrelated Performance and Safety Functions

The interrelated performance and safety functions of the RCS and its major components are listed below:

1. The RCS provides sufficient heat transfer capability to transfer the heat produced during power operation and when the reactor is subcritical, including the initial phase of plant cooldown, to the Steam and Power Conversion System.

2. The system provides sufficient heat transfer capability to transfer the heat produced during the subsequent phase of plant cooldown and cold shutdown to the Residual Heat Removal System.

3. The system heat removal capability under power operation and normal operational transients, including the transition from forced to natural circulation, shall assure no fuel damage within the operating bounds permitted by the Reactor Control and Protection Systems.

4. The RCS provides the water used as the neutron moderator and reflector and as a solvent for chemical shim control.

5. The system maintains the homogeneity of soluble neutron poison concentration and rate of change of coolant temperature such that uncontrolled reactivity changes do not occur.

6. The reactor vessel is an integral part of the RCS pressure boundary and is capable of accommodating the temperatures and pressures associated with the operational transients. The reactor vessel functions to support the reactor core and control rod drive mechanisms.

7. The pressurizer maintains the system pressure during operation and limits pressure transients. During the reduction or increase of plant load, reactor coolant volume changes are accommodated via the surge line to the pressurizer.

8. The reactor coolant pumps supply the forced coolant flow necessary to remove heat from the reactor core and transfer it to the steam generators.

9. The steam generators provide high quality steam to the turbine. The tube and tube sheet boundary are designed to prevent the transfer of activity generated within the core to the secondary system.

10. The RCS piping serves as a boundary for containing the coolant under operating temperature and pressure conditions and for limiting leakage (and activity release) to the containment atmosphere. The RCS piping contains demineralized light water which is circulated at the flow rate and temperature consistent with achieving the reactor core thermal and hydraulic performance.

System Operation

Brief descriptions of normal anticipated system operations are provided below. These descriptions cover plant startup, power generation, hot shutdown, cold shutdown and refueling.

Plant Startup

Plant startup encompasses the operations which bring the reactor plant from cold shutdown to no-load power operating temperature and pressure. Before plant startup, the reactor coolant loops are filled completely, by the use of the charging pumps or RHR pumps, with water containing the cold shutdown concentration of boron. The secondary side of the steam generator is filled to normal startup level with water which meets the steam plant water chemistry requirements.

Upon completion of venting, the RCS is pressurized by the use of the low pressure letdown control valve and the centrifugal charging pumps. After the RCS reaches a certain specified pressure, the pressurizer heaters are energized to draw a bubble in the pressurizer. Then the reactor coolant pumps are started provided that the minimum NPSH requirements are met, a steam bubble is formed in the pressurizer, and a minimum RCP seal injection flow rate is confirmed. The RCPs and the pressurizer heaters are used to heat the reactor coolant. Meanwhile, the pressurizer liquid level is reduced until the no load power level volume is established. Fracture preventation temperature limitations of the reactor vessel impose an upper limit of approximately 450 psig. The charging pump supplies seal injection water for the reactor coolant pump shaft seals. A nitrogen atmosphere and normal operating temperature, pressure and water level are established in the pressurizer relief tank.

During the initial heatup phase, hydrazine is added to the reactor coolant to scavenge the oxygen in the system; the heatup is not taken beyond 250°F until the oxygen level has been reduced to the specified level.

The reactor coolant pumps and pressurizer heaters are used to raise the reactor coolant temperature to a level beyond which the overall moderator temperature coefficient is negative.

As the reactor coolant temperature increases, the pressurizer heaters are manually controlled to maintain adequate suction pressure for the reactor coolant pumps. The pressurizer heat and spray controls can be transferred from manual to automatic control later in the heatup sequence.

Power Generation and Hot Shutdown

Power generation includes steady state operation, ramp changes not exceeding the rate of five percent of full power per minute, step changes of ten percent of full power (not exceeding full power), and step load changes with steam dump not exceeding the design step load decrease.

During power generation, RCS pressure is maintained by the pressurizer pressure control at or near 2235 psig, while the pressurizer liquid level is controlled by the charging-letdown flow control of the Chemical and Volume Control System. The pressurizer pressure, level, and charging flow controls are contained within the plant Distributed Control System (DCS).

When the reactor power level is less than 15 percent, the reactor power is controlled manually. At power above 15 percent, the automatic Rod Control System, contained within the plant DCS, maintains the average coolant temperature, consistent with the power relationships, by control rod movement.

During the hot shutdown operations, when the reactor is subcritical, the RCS temperature is maintained by steam dump to the main condenser. This is accomplished by the Steam Dump Control System (SDCS), contained within the plant DCS, operating in the pressure control mode, which is set to maintain the steam generator steam pressure. Residual heat from the core or operation of a reactor coolant pump provides heat to overcome RCS heat losses.

Plant Shutdown

Plant shutdown is the operation which brings the reactor plant from no load power operating temperature and pressure to cold shutdown. During the plant cooldown, charging is provided to makeup for coolant contraction. During the initial phase of the cooldown, the makeup is provided from the boric acid tanks. The boric acid tanks should be used until at least the technical requirement manual minimum volume has been charged. At that point, operators can continue using the boric acid tanks if additional volume is available, or shift suction of the charging pumps to the refueling water storage tank. If the boric acid tanks are used, pure boric acid should be charged until the reactor coolant system reaches the desired cold shutdown concentration. The cooldown is completed by using blended makeup at the cold shutdown concentration. If the RCS is to be opened during the shutdown, the hydrogen and fission gas in the reactor coolant is reduced by degassing the coolant in the Volume Control Tank.

Plant shutdown is accomplished in two phases, the first is by the combined use of the RCS and steam systems, and the second by the Residual Heat Removal System. During the first phase of shutdown, residual core and reactor coolant heat is transferred to the steam system via the steam generator. Steam from the steam generator is dumped to the main condenser. At least one reactor coolant pump is kept running to assure uniform RCS cooldown.

When the reactor coolant temperature and pressure are below approximately 350°F and 380 psig, respectively, the second phase of shutdown commences with the operation of the Residual Heat Removal System. With RHR in service, RCS pressure is maintained less than or equal to 380 psig. This provides sufficient margin to prevent the RHR suction relief valve from lifting at its setpoint of 450 psig. The pressurizer heaters are maintained energized while filling the pressurizer water solid to prevent stratification of the pressurizer water volume and to maintain an outflow of hot water from the surge line. With the heaters energized, the pressurizer is deliberately filled by creating a charging and letdown mismatch. After the pressurizer is filled, the heaters are deenergized to allow the pressurizer to cool.

At approximately 140°F the last operating reactor coolant pump(s) may be turned off or cooldown may continue using a reactor coolant pump(s) and its associated steam generator to expedite cooldown to a reactor coolant system temperature of approximately 100°F. After the last reactor coolant pump is turned off, pressurizer cooldown is continued by initiating auxiliary spray flow from the Chemical and Volume Control System.

Refueling

Before removing the reactor vessel head for refueling, the system temperature has been reduced to 140°F or less and hydrogen and fission product levels are reduced. Installed plant instrumentation is provided to monitor RCS level during drain down activities. Draining continues until the water level is below the reactor vessel flange. The vessel head is then raised and the refueling cavity is flooded. Upon completion of refueling, the system is refilled for plant startup.

5.1.1 Schematic Flow Diagram

The Reactor Coolant System is shown in Figure 5.1-1. Principal pressures, temperatures, flow rates, and coolant volume data under normal steady-state, full power operating conditions are provided in Table 5.1-1.

5.1.2 Piping and Instrumentation Diagram

A piping and instrumentation diagram of the Reactor Coolant System is shown on Figure 5.1-1. The diagram shows the extent of the systems located within the containment, the points of separation between the Reactor Coolant System and the secondary (heat utilization) system.

5.1.3 Elevation Drawing

Figure 1.2.3-13 is an elevation drawing providing principal features of the Reactor Coolant System in relation to surrounding concrete structures.

5.1.4 References

1. Framatome ANP, letter FANP-03-1232, dated April 11, 2003; Reactor Coolant System Mechanical Design Flow (MDF) Limit.

2. Framatome ANP, letter FANP-03-2010, dated June 20, 2003; Mechanical Design Flow Calculation.

3. BAW-10243P-A, Statistical Fuel Assembly Hold Down Methodology, Framatome ANP, Lynchburg, Virginia, September 2005.

4. AREVA NP, letter FAB06-120, dated March 30, 2006; Documents Transmittal AREVA NP Document 51-9012054-001 dated March 30, 2006; Design Report for Mark-BW Fuel Assemblies With Pre-Set Holddown Springs at Sequoyah.

TABLE 5.1-1 (Sheet 1)

SYSTEM DESIGN AND OPERATING PARAMETERS

Plant Design Life, years	40
Nominal Operating Pressure, psig	2235
Total System Volume, including pressurizer and surge line, ft^3 (estimated *at a nominal T_{avg} of 525°F*), ± 100 ft^3	12,612
System Liquid Volume, including pressurizer water at maximum guaranteed power, ft^3 (estimated), ± 100 ft^3	11,892
Reactor Power MWt	3455
NSSS Power, MWt	3467

System Thermal and Hydraulic Data
(Based on Thermal Design Flow)

	Unit 1 RSG		Unit 2 RSG	
	0% SGTP	15% SGTP	0% SGTP	15% SGTP
Full Power Operability Flow, gpm/loop	90,045	90,045	90,045	90,045
Thermal Design Flow, gpm/loop	87,000	87,000	87,000	87,000
Total Reactor Coolant Flow, lb/hr	131.7×10^6	131.7×10^6	131.7×10^6	131.7×10^6
Reactor Vessel Inlet Temperature, °F	544.8	544.8	544.8	544.8
Reactor Vessel Outlet Temperature, °F	611.6	611.6	611.6	611.6
Steam Generator Outlet Temperature, °F	544.5	544.5	544.5	544.5
Steam Pressure at Full Power, psia	874	840	874	840
Steam Generator Steam Temperature, °F	528.6	523.9	529.1	524.4
Steam Flow at Full Power, lb/hr (total)	15.12×10^6	15.12×10^6	15.12×10^6	15.12×10^6
Feedwater Inlet Temperature, °F	435.8	435.8	436.0	436.0
Pressurizer Spray Rate, max., gpm	800	800	800	800
Pressurizer Heater Capacity, kw	1800	1800	1800	1800
Pressurizer Relief Tank Volume, ft^3	1800	1800	1800	1800

TABLE 5.1-1 (Sheet 2)

SYSTEM DESIGN AND OPERATING PARAMETERS

Flows and Pressure Drops at 100 Percent Power
(Based on Best Estimate Flow)

	Unit 1 RSG	Unit 2 RSG
Best Estimate Flow, gpm/loop	97,492	97,596
SG Pressure Drop, Primary Nozzle to Nozzle, (psi)**.	34.35	34.35
SG Pressure Drop, Secondary Side, (psi)**	14.39	13.99

** AREVA Calculation, 32-9129996, Rev. 0, “Original and Replacement SG Comparison for Sequoyah Unit 1 and Unit 2,” Acknowledged by TVA Letter TVANP-009.

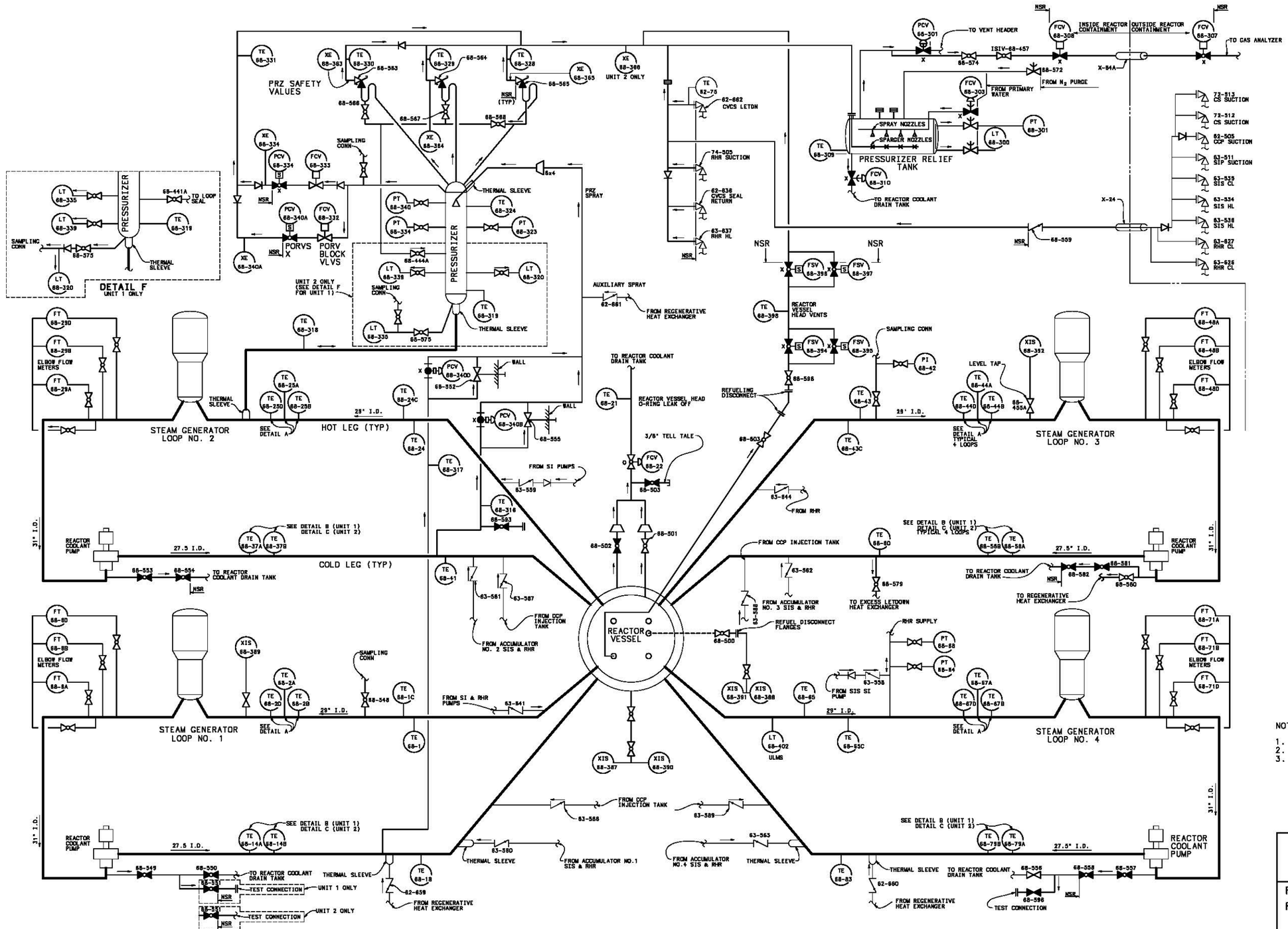

NOTES:

1. NSR DEFINES NON-SAFETY RELATED BOUNDARY.
2. FAIL OPEN DENOTED BY O
3. FAIL CLOSE DENOTED BY X

SEQUOYAH NUCLEAR PLANT
FINAL SAFETY
ANALYSIS REPORT

FIGURE 5.1-1
REACTOR COOLANT SYSTEM
(REVISED BY AMENDMENT 27)

CAD MAINTAINED DRAWING

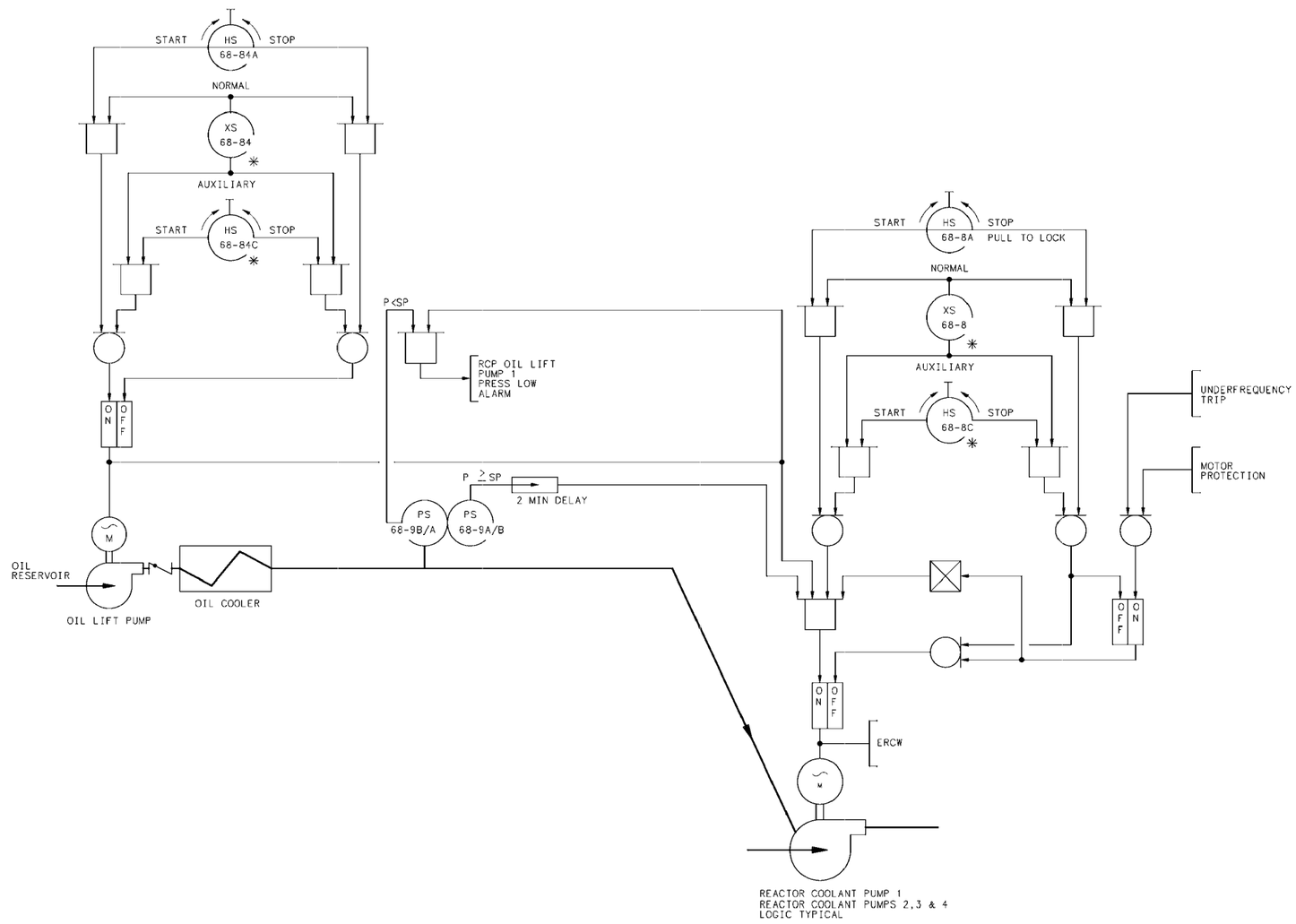

NOTES:
1. LOCATION OF CONTROLS
   *AUXILIARY CONTROL STATION
2. LOGIC SHOWN IS TYPICAL
   FOR UNITS 1 AND 2.

SEQUOYAH NUCLEAR PLANT
FINAL SAFETY
ANALYSIS REPORT

FIGURE 5.1-2
REACTOR COOLANT PUMP LOGIC

(REVISED BY AMENDMENT 13)

DRAWING SERVICES UNIT
PROCAD MAINTAINED DRAWING
THIS CONFIGURATION CONTROL DRAWING IS MAINTAINED BY THE SQN CAD UNIT AND IS PART OF THE TVA PROCADAM DATABASE.
COMPUTER GRAPHICS

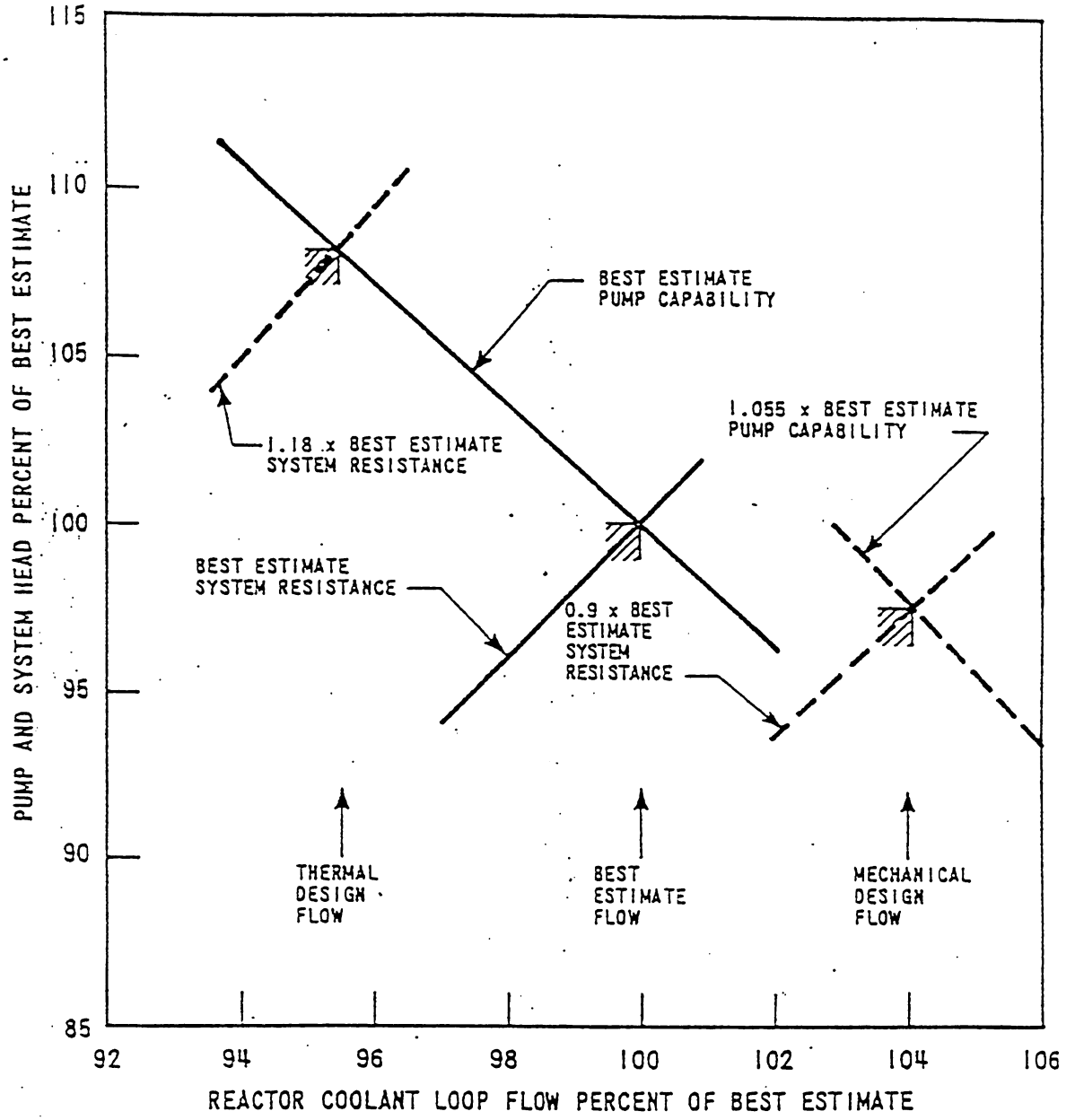

Figure 5.1-3 Pump Head - Flow Characteristics

NOTE: This figure illustrates the original design basis for the plant. Beginning with SQN Unit 1 and 2 Cycle 9, both the thermal design flow and the mechanical design flow are being set empirically based on actual plant operating data.

5.2 INTEGRITY OF THE REACTOR COOLANT SYSTEM BOUNDARY

In adjusting the Sequoyah FSAR format to fit the NRC Format Guide it has been necessary in certain areas to use terminology which is basically inappropriate to plants of the Sequoyah era. However in using certain of the terminology which follows, we make the distinction that we are stating what the system is capable of being measured against; not the actual rules used in the original design.

The ASME Section III Nuclear Power Plant Components Code 1971 edition is inapplicable to the Sequoyah Plants. However, since the reactor coolant loop vessels (reactor vessel, pressurizer and steam generators) are basically standard components, analysis on these vessels with the more recent ASME Code conditions (normal, upset, emergency and faulted) have been performed with the load combinations and associated stress limits given in Tables 5.2-1 through 5.2-5. This analysis includes the dynamic effects of equipment operation as transmitted to various components by system piping.

Reactor Coolant System components have been designed, fabricated, inspected, tested, and procured in accordance with Tables 3.2.2-1 and 3.2.2-2.

The Reactor Coolant System boundary is designed to accommodate the system pressures and temperatures attained under all expected modes of plant operation including all anticipated transients, and to maintain the stresses within applicable stress limits. Design conditions are given in Paragraph 5.2.1.1. The system is protected from overpressure by means of pressure relieving devices as required by applicable codes. Materials of construction are specified to minimize corrosion and erosion and to provide a structural system boundary throughout the life of the plant. Fracture prevention measures are taken to prevent brittle fracture. Inspection in accordance with applicable codes and provisions (see Subsection 5.2.8) are made for surveillance of critical areas to enable periodic assessment of the boundary integrity.

5.2.1 Design of Reactor Coolant System Boundary Components

The original design basis conditions as discussed in this section included the effects of postulated main reactor coolant loop pipe breaks. These breaks have been eliminated from the design basis through application of leak before break technology (see Section 3.6.1.1). The original design basis evaluation is described below. These results envelope the effects of the remaining postulated LOCAs.

5.2.1.1 Performance Objectives and Design Conditions

The performance objectives of the Reactor Coolant System (RCS) are described in Section 5.1. Equipment Code and classification list for the components within the RCS boundary are given in Section 3.2.

The RCS in conjunction with the Reactor Control and Protection Systems is designed to maintain the reactor coolant at conditions of temperature, pressure and flow adequate to protect the core from damage. The design requirement for safety is to prevent conditions of high power, high reactor coolant temperature or low reactor coolant pressure or combinations of these which could result in a DNBR less than 1.3.

The RCS is designed to avoid uncontrolled reductions in boric acid concentration or reactor coolant temperature. The reactor coolant is the core moderator, reflector, and solvent for the chemical shim.

As a result, changes in coolant temperature or boric acid concentration affect the reactivity level in the core.

The following design bases have been selected to ensure that the uniform RCS boron concentration and temperature will be maintained:

1. Coolant flow is provided by either a reactor coolant pump or a residual heat removal pump to ensure uniform mixing of the boron.

2. The design arrangement of the Reactor Coolant System eliminates dead ended sections and other areas of low coolant flow in which nonhomogeneities in coolant temperature or boron concentration could develop.

3. The RCS is designed to operate within the operating parameters, particularly the coolant temperature change limitations.

The design pressure for the RCS is 2485 psig except for the pressurizer relief line from the safety valve to the pressurizer relief tank, which is 600 psig, and the pressurizer relief tank, which is 100 psig. For components with design pressures of 2485 psig, the normal operating pressure is 2235 psig. The design temperature for the RCS is 650°F except for the pressurizer and its surge line which are designed for 680°F, and the pressurizer relief line from the safety valve to the pressurizer relief tank, which is designed for 600°F.

The following five ASME operating conditions are considered in the design of the RCS.

1. Normal Conditions

   Any condition in the course of startup, operation in the design power range, hot standby and system shutdown, other than upset, emergency, faulted or testing conditions.

2. Upset conditions

   Any deviations from normal conditions anticipated to occur often enough that design should include a capability to withstand the conditions without operational impairment. The upset conditions include those transients which result from any single operator error or control malfunction, transients caused by a fault in a system component requiring its isolation from the system and transients due to loss of load or power. Upset conditions include any abnormal incidents not resulting in a forced outage and also forced outages for which the corrective action does not include any repair of mechanical damage. The estimated duration of an upset condition is included in the design specifications.

3. Emergency conditions

   Those deviations from normal conditions which require shutdown for correction of the conditions or repair of damage in the system. The conditions have a low probability of occurrence but are included to provide assurance that no gross loss of structural integrity will result as a concomitant effect of any damage developed in the system. The total number of postulated occurrences for such events shall not cause more than twenty-five stress cycles having a S_a value greater than that for 10^6 cycles from the applicable fatigue design curves of the ASME code Section III.

4. Faulted conditions

   Those combinations of conditions associated with extremely low probability, postulated events whose consequences are such that the integrity and operability of the nuclear energy system may be impaired to the extent that considerations of public health and safety are involved. Such conditions require compliance with safety criteria as may be specified by jurisdictional authorities.

5. Testing conditions

   Testing conditions are those tests in addition to the hydrostatic or pneumatic tests required by ASME code Section III including leak tests or subsequent hydrostatic tests.

To provide the necessary high degree of integrity for the equipment in the RCS, the transient conditions selected for equipment fatigue evaluation are based upon a conservative estimate of the magnitude and frequency of the temperature and pressure transients resulting from various operating conditions in the plant. To a large extent, the specific transient operating conditions to be considered for equipment fatigue analyses are based upon engineering judgment and experience. The transients selected are representative of operating conditions which prudently should be considered to occur during plant operation and are sufficiently severe or frequent to be of possible significance to component cyclic behavior. The transients selected may be regarded as a conservative representation of transients which, used as a basis for component fatigue evaluation, provide confidence that the component is appropriate for its application over the design life of the plant.

The following five transients are considered normal conditions:

1. Heatup and Cooldown

   For design evaluation, the heatup and cooldown cases are represented by continuous heatup or cooldown at a rate of 100°F per hour which corresponds to a heatup or cooldown rate under abnormal or emergency conditions. The heatup occurs from ambient to the no load temperature and pressure condition and the cooldown represents the reverse situation. In actual practice, the rate of temperature change of 100°F per hour will not be usually attained because of other limitations such as:

   a. Criteria for prevention of non-ductile failure which establish maximum permissible temperature rates of change, as a function of plant pressure and temperature.

   b. Slower initial heatup rates when using pumping energy only.

   c. Interruptions in the heatup and cooldown cycles due to such factors as drawing a pressurizer steam bubble, rod withdrawal, sampling, water chemistry and gas adjustments.

   The heatup and cooldown rates, imposed by plant operating procedures, are in accordance with the Sequoyah Technical Specifications. Ideally, heatup and cooldown would occur only before and after refueling. In practice, additional unscheduled plant cooldowns may be necessary for plant maintenance. The frequency of maintenance shutdowns is expected to decrease as the plant matures.

2. Unit Loading and Unloading

The unit loading and unloading cases are conservatively represented by a continuous and uniform ramp power change of 5 percent per minute between 15 percent load and full load. This load swing is the maximum possible consistent with operation under automatic reactor control. The reactor temperature varies with load as prescribed by the Reactor Control System.

3. Step Increase and Decrease of Ten Percent

The ± 10 percent step change in load demand is a control transient which is assumed to be a change in turbine control valve opening which might be occasioned by disturbances in the electrical network into which the plant output is tied. The Reactor Control System is designed to restore plant equilibrium without reactor trip following a ± 10 percent step change in turbine load demand initiated from nuclear plant equilibrium conditions in the range between 15 percent and 100 percent full load, transients producing an overpower condition are controlled/terminated by other control/protective functions within the power range for automatic reactor control. In effect, during load change conditions, the Reactor Control System attempts to match turbine and reactor outputs in such a manner that peak reactor coolant temperature is minimized and reactor coolant temperature is restored to its programmed set point at a sufficiently slow rate to prevent excessive pressurizer pressure decrease.

Following a step load decrease in turbine load, the secondary side steam pressure and temperature initially increase since the decrease in nuclear power lags behind the step decrease in turbine load. During the same increment of time, the Reactor Coolant System average temperature and pressurizer pressure also initially increase. Because of the power mismatch between the turbine and reactor and the increase in reactor coolant temperature, the control system automatically inserts the control rods to reduce core power.

With the load decrease, the reactor coolant temperature is ultimately reduced from its peak value to a value below its initial equilibrium value at the inception of the transient. The reactor coolant average temperature setpoint change is made as a function of turbine-generator load as determined by first stage turbine pressure measurement. The pressurizer pressure also decreases from its peak pressure value and follows the reactor coolant decreasing temperature trend. At some point during the decreasing pressure transient, the saturated water in the pressurizer begins to flash which reduces the rate of pressure decrease. Subsequently the pressurizer heaters come on to restore the plant pressure to its normal value.

Following a step increase in turbine load, the reverse situation occurs, i.e., the secondary side steam pressure and temperature initially decrease and the reactor coolant average temperature and pressure initially decrease. The control system automatically withdraws the control rods to increase core power. The decreasing pressure transient is reversed by actuation of the pressurizer heaters and eventually the system pressure is restored to its normal value. The reactor coolant average temperature is raised to a value above its initial equilibrium value at the beginning of the transient..

4. Large Step Decrease in Load

This transient applies to a step decrease in turbine load from full power of such magnitude that the resultant rapid increase in reactor coolant average temperature and secondary side steam pressure and temperature automatically initiates a secondary side steam dump that prevents a reactor shutdown or lifting of steam generator safety valves. Thus, when a plant is designed to

accept a step decrease of 95 percent from full power, it signifies that a steam dump system provides a heat sink to accept 85 percent of the turbine load. The remaining 10 percent of the total step change is assumed by the rod control system. If a steam dump system were not provided to cope with this transient, there would be such a large mismatch between what the turbine is demanding and what the reactor is furnishing that a reactor trip and lifting of steam generator safety valves would occur. Although the Sequoyah plant has been designed for a 50 percent step change, the transient for the 95 percent step-load decrease is considered since it represents a more severe condition.

5. Steady State Fluctuations

   The reactor coolant average temperature, for purposes of design, is assumed to increase or decrease a maximum of 6°F in one minute. The temperature changes are assumed to be around the programmed value of T_{avg}, (T_{avg} + 3°F). The corresponding reactor coolant average pressure is assumed to vary accordingly.

The following six transients are considered upset conditions:

1. Loss of Load Without Immediate Turbine or Reactor Trip

   This transient applies to a step decrease in turbine load from full power occasioned by the loss of turbine load without immediately initiating a reactor trip and represents the most severe transient on the RCS under upset conditions. The reactor and turbine eventually trip as a consequence of a high pressurizer level trip initiated by the Reactor Trip System. Since redundant means of tripping the reactor are provided as a part of the reactor protection system, transients of this nature are not expected, but are included to insure a conservative design.

2. Loss of Power

   This transient applies to a blackout situation involving the loss of outside electrical power to the station with a reactor and turbine trip. Under these circumstances, the reactor coolant pumps are de-energized and following the coastdown of the reactor coolant pumps, natural circulation builds up in the system to some equilibrium value. This condition permits removal of core residual heat through the steam generators which at this time are receiving feedwater from the auxiliary feed system operating from diesel generator power. Steam is removed for reactor cooldown through atmospheric relief valves provided for this purpose.

3. Loss of Flow

   This transient applies to a loss of flow accident from full power in which a reactor coolant pump is tripped out of service as a result of an electrical or mechanical failure. The consequences of such an accident are reactor and turbine trip, on low reactor coolant flow, followed by automatic opening of the steam dump system and flow reversal in the affected loop. The flow reversal results in reactor coolant at cold leg temperature being passed through the steam generator and cooled still further. This cooler water then passes through the hot leg piping and enters the reactor vessel outlet nozzles. The net result of the flow reversal is a sizable reduction in the hot leg coolant temperature of the affected loop.

4. Reactor Trip From Full Power

A reactor trip from full power may occur for a variety of causes resulting in temperature and pressure transients in the RCS and in the secondary side of the steam generator. This is the result of continued heat transfer from the reactor coolant in the steam generator. The transient continues until the reactor coolant and steam generator secondary side temperatures are in equilibrium at zero power conditions. A continued supply of feedwater and controlled dumping of secondary steam remove the core residual heat and prevent the steam generator safety valves from lifting. The reactor coolant temperature and pressure undergo a rapid decrease from full power values as the Reactor Trip System causes the control rods to move into the core.

5. Inadvertent Auxiliary Spray

The inadvertent pressurizer auxiliary spray transient will occur if the auxiliary spray valve is opened inadvertently during normal operation of the plant. This will introduce cold water into the pressurizer with a very sharp pressure decrease as a result.

The temperature of the auxiliary spray water is dependent upon the performance of the regenerative heat exchanger. The most conservative case is when the letdown stream is shut off and the charging fluid enters the pressurizer unheated. Therefore, for design purposes, the temperature of the spray water is assumed to be 100°F. The spray flow rate is assumed to be 200 gpm. It is furthermore assumed that the auxiliary spray will, if actuated, continue for five minutes until it is shut off.

The pressure decreases rapidly to the low pressure reactor trip point. At this pressure the pressurizer low pressure reactor trip is assumed to be actuated; this accentuates the pressure decrease until the pressure is finally limited to the hot leg saturation pressure. At five minutes, the spray is stopped and all the pressurizer heaters return the pressure to 2250 psia. This transient is more severe on a two loop plant than on a three or four loop plant, e.g., a bigger and more rapid pressure decrease. Therefore, the transient for a two loop plant is used as design basis for all plants.

For design purposes it is assumed that no temperature changes in the Reactor Coolant System will occur as a result of initiation of auxiliary spray except in the pressurizer.

6. 1/2 Safe Shutdown Earthquake (1/2 SSE)

The earthquake loads are a part of the mechanical loading conditions specified in the equipment specifications. The origin of their determination is separate and distinct from those transient loads resulting from fluid pressure and temperature. Their magnitude, however, considered in the design analysis is for comparison with appropriate stress limits.

No transient is classified as an emergency condition.

The following four transients are considered faulted conditions:

1. RCS Boundary Pipe Break

This accident involves the postulated rupture of a pipe belonging to the RCS boundary. It is conservatively assumed that the system pressure is reduced rapidly and the Emergency Core Cooling System is initiated to introduce water into the RCS. The safety injection signal also will initiate a turbine and reactor trip.

Westinghouse has used the criteria given in Section 3.6 in the design of the supports and restraints of the RCS in order to assure continued integrity of vital components and engineered safety systems.

Analyses reported in Reference (3) and service experiences show that the criteria given in Section 3.6 offer a practical equivalent to assure the same degree of protection to public health and safety as postulating both longitudinal and circumferential breaks at any location. Westinghouse Nuclear Steam Supply System piping and support components have been designed to these criteria. Westinghouse has performed this analysis for the Sequoyah plant including the Westinghouse Nuclear Steam Supply System equipment and the support structures designed by Westinghouse.

Protection criteria against dynamic effects associated with pipe breaks is covered in Section 3.6.

2. Steam Line Break

For component evaluation, the following conservative conditions are considered.

a. The reactor is initially in hot, zero power subcritical condition assuming all rods in except the most reactive rod which is assumed to be stuck in its fully withdrawn position.

b. A steam line break occurs inside the containment resulting in a reactor and turbine trip.

c. Subsequent to the break the reactor coolant temperature cools down to 212°F.

d. The Emergency Core Cooling System pumps restore the reactor coolant pressure.

The above conditions result in the most severe temperature and pressure variations which the component will encounter during a steam break accident.

The dynamic reaction forces associated with circumferential steam line breaks have been considered in the design of supports and restraints in order to assure continued integrity of vital components and engineered safety features. Both Unit 2 and Unit 1 (subsequent to steam generator replacement) are qualified for the postulated conditions that result in maximum severity. Protection criteria against dynamic effects associated with RCS pipe breaks is covered in Section 3.6.

3. Steam Generator Tube Rupture

This accident postulates the double ended rupture of a steam generator tube resulting in a decrease in pressurizer level and RCS pressure. Reactor trip occurs due to a safety injection signal on low pressurizer pressure. The planned procedure for recovery from this accident calls for isolation of the steam line leading from the affected steam generator. (Reference Section15.4) Therefore, this accident results in a transient which is no more severe than that associated with a reactor trip. Note that both Unit 2 and Unit 1 (subsequent to steam generator replacement) are qualified for the postulated conditions that result in maximum severity.

4. Safe Shutdown Earthquake (SSE)

The mechanical stress resulting from the safe shutdown earthquake is considered on a component basis.

The above design conditions are given in the Equipment-Specifications which are written in accordance with the appropriate ASME Codes.

The design transients and the number of cycles of each that is normally used for fatigue evaluations are shown in Table 5.2.1-1. In accordance with the ASME Boiler and Pressure Vessel Code, faulted conditions are not included in fatigue evaluations.

The following tests were performed prior to plant startup:

1. Turbine Roll Test

   This transient is imposed upon the plant during the hot functional test period for turbine cycle checkout. Reactor coolant pump power is used to heat the reactor coolant to operating temperature and the steam generated is used to perform a turbine roll test. However, the plant cooldown during this test exceeds the 100°F per hour maximum rate.

2. Hydrostatic Test Conditions

   The pressure tests are outlined below:

   a. Primary Side Hydrostatic Test Before Initial Startup

      The pressure tests covered by this section include both shop and field hydrostatic tests which occurred as a result of component or system testing. This hydro test was performed prior to initial fuel loading at a water temperature compatible with reactor vessel fracture prevention criteria requirements and a maximum test pressure of 3107 psig or 1.25 times the design pressure. In this test the Reactor Coolant System was pressurized to 3107 psig coincident with increasing the pressure on the steam generator secondary side, as required, to maintain less than 1600 psi differential pressure across the steam generator tubes. The Chemical and Volume Control System provides the means to hydrostatically test the RCS.

   b. Secondary Side Hydrostatic Test Before Initial Startup

      The secondary side of the original steam generator (OSG) is pressurized to 1.25 times the design pressure of the secondary side coincident with the primary side at 0 psig.

   c. Primary Side Leak Test

      Subsequent to system closure after the primary system is opened, a leak test is performed. During this test the primary system pressure is, for design purposes, assumed to be raised to 2500 psia, with the system temperature above design transition temperature, while the system is checked for leaks.

      In actual practice, the primary system is brought to normal operating temperature and pressure to prevent the pressurizer safety valves from lifting during the leak test and to prevent exceeding the 1600 psid tube sheet differential pressure limit.

5.2.1.2 Normal Condition Pipe Stress Analysis

The Unit 1 Reactor Coolant Loop Structural Analysis is summarized in WCAP-7957 Part 1 while the Unit 2 analysis is still based on Westinghouse Reports SD-105 and SD-119.

The stresses due to primary loadings of pressure and weight are summed. The thermal expansion stress is secondary in nature and hence is not combined with the primary stresses. The calculations for RCL is piping minimum wall thickness, pressure stress, and thermal expansion stress are performed in accordance with USAS B31.1 power piping code.

The RCL piping is made from a material called A351 GR CF 8 M. This material is not shown in USAS B31.1, however the material is shown in USAS B31.7. Therefore, the material allowable used for the qualification of the RCL piping was based upon USAS B31.7.

A code allowable stress value (S_h) of 14,800 psi was used to evaluate the maximum Unit 1 and Unit 2 calculated stress due to primary loadings of pressure and weight in the reactor coolant loop piping.

A code allowable stress value (S_A per USAS B31.1) of 25,575 psi was used to evaluate the maximum Unit 1 and Unit 2 calculated stress due to thermal expansion in the reactor coolant loop piping.

Upset Condition

The 1/2 SSE stresses are added to the stresses due to primary loadings of pressure and weight. It is conservatively assumed that the maximum stress values occur at the same point around the pipe circumference.

The maximum combined stresses due to 1/2 SSE, weight, and pressure in the reactor coolant loop piping were compared to a code allowable of (1.2 S_h) 17,760 psi.

Faulted Conditions

The SSE and LOCA stresses are added to the stresses due to primary loadings of pressure and weight. It is conservatively assumed that the maximum stress values occur at the same point around the pipe circumference.

The maximum combined stresses due to SSE, LOCA, weight, and pressure in the reactor coolant loop piping were compared to a code allowable of (2.4 S_h) 35,520 psi.

The procedure for evaluation of the piping stresses due to combined loadings of weight, pressure, SSE and LOCA is as described below.

The LOCA RCL piping analysis yields a time-history of results at various locations in the reactor coolant loop piping. The results are maximized from all of the LOCA conditions considered.

5.2.1.3 Support Stress Analysis

5.2.1.3.1 Design Conditions

Normal Conditions

Thermal, weight, and pressure forces (obtained from the RCL analysis) acting on the support structures are combined algebraically. The combined load component vector is multiplied by member influence coefficient matrices to obtain all force components at each end of each member in the support system.

The adequacy of each member is verified by solving the AISC-69 stress, interaction, and dimensional ratio equations.

Upset Condition

1/2 SSE support forces were assigned positive then negative signs and, in each case, were added algebraically to normal condition forces. The interaction and stress equations are the allowable specified limits permitted by AISC-69.

Faulted Condition

SSE LOCA support forces are combined with Normal loads and used in the above stress and interaction equations. For this loading condition, limiting values of 1.5 times allowables were used. This limit represents a stress of about 0.9 yield and provides a 10 percent margin against buckling for short stocky members whose buckling mode is highly inelastic and up to 30 percent for members whose buckling mode is elastic.

Design of the reactor coolant pump anchorages and the lower steam generator supports, used the leak before break (LBB) technology for the reactor coolant loop pipe break loads.

5.2.1.3.2 Initial Conditions

The load combinations that are considered in the design of structural steel members of component supports are summarized in Table 5.2-5. The design is described in Paragraph 5.5.14.2.

Deadweight

The deadweight loading imposed by the piping on the supports is defined to consist of the dry weight of the coolant piping and the weight of the water contained in piping during normal operation. In addition, the total weight of the primary equipment components including water forms a deadweight loading on the individual component supports.

Thermal Expansion

The free vertical thermal growth of the reactor vessel nozzle centerlines is considered in the thermal analysis of the reactor coolant loop (RCL) piping.

The cold and hot moduli of elasticity, the coefficient of thermal expansion at the metal temperature, and the temperature rise above the ambient temperature define the required input data to perform the flexibility analysis for thermal expansion.

Earthquake Loads

The intensity and character of the earthquake motion which produces forced vibration of the equipment mounted within the containment building are specified in terms of the floor response spectrum curves at various elevations within the containment building. The 1/2 SSE and SSE floor response spectrum curves for earthquake motions were developed by the Tennessee Valley Authority.

Pressure

The steady state hydraulic forces based on the system initial pressure are applied as external loads to the RCL model for determination of the RCL/support system deflections and support forces. The design pressure is also included in the evaluation of the piping stress.

Pipe Rupture Loads

Blowdown loads are developed in the broken and unbroken reactor coolant loops as a result of the transient flow, pressure fluctuations following a postulated loss-of-coolant accident (LOCA) in one of the reactor coolant loops. Note that “broken loop” refers to the loop which contains the auxiliary line nozzle break (surge, accumulator, or RHR) and “unbroken loop” refers to any of the remaining three loops. The postulated LOCA is assumed to have one millisecond opening time to simulate the instantaneous occurrence.

Analytical Methods

The static and dynamic structural analyses assume linear elastic behavior and employ the displacement (stiffness) matrix method and the normal mode theory for lumped-parameter, multi-mass structural representation to formulate the solution. The complexity of the physical system to be analyzed requires the use of a computer for solution. Herein lies the need for accurate and adequate representation of the physical system by means of an idealized (mathematical) model.

The loadings on the component supports are obtained from the analysis of an integrated reactor coolant loop supports system dynamic structural model as shown in Figure 5.2.1-4.

5.2.1.3.3 Design Evaluation

The support loads are computed by multiplying the support stiffness matrix, and the displacement vector, at the support point. The support loads are saved on magnetic tape for use in support member evaluation.

The STAAD and STRUDL computer programs are used to obtain support stiffness matrices and member influence coefficients for the equipment supports. Unit force along and unit moment about each coordinate axis are applied to the models at the equipment vertical centerline joint. Stiffness analysis is performed for each unit load for each model. Printed output includes all six components of displacement at the joint at which loads are applied and six force components at each end of each member in the support system.

Joint displacements for applied unit loads are formulated into flexibility matrices. These are inverted to obtain support stiffness matrices which are included in the RCL model. Figures 5.2.1-5 through 5.2.1-7 illustrate the support models and show the member locations.

The pressurizer base support ring and upper lateral support structures were analyzed conservatively for SSE and accident loads. Accident loads were obtained for breaks in both the surge line and the relief lines attached to the pressurizer. The forces and stresses in the pressurizer supports are well within permissible values for all loading conditions.

The reactor vessel support structures were analyzed using a finite element model with the STASYS computer program for an applied force resulting from all loading conditions. Dynamic forces applied to these structures are the combination of forces obtained from the reactor coolant loop analysis and the reactor vessel internals analysis.

5.2.1.4 Component Stress Evaluation

The RCS provides for heat transfer from the reactor to the steam generators under conditions of forced circulation flow and natural circulation flow. The heat transfer capabilities of the RCS are analyzed in Chapter 15 for various transients.

The heat transfer capability of the steam generators is sufficient to transfer, to the Steam and Power Conversion System, the heat generated during normal operation, and during the initial phase of plant cooldown under natural circulation conditions.

During the second phase of plant cooldown and during cold shutdown and refueling, the heat exchangers of the Residual Heat Removal System are employed. Their capability is discussed in Section 5.7.

Tests are performed to determine the total delivery capability of the Reactor Coolant Pumps. Thus, it is confirmed prior to plant operation that adequate circulation is provided by the RCS.

To assure a heat sink for the reactor under conditions of natural circulation flow, the steam generators are at a higher elevation than the reactor. In the design of the steam generators (both OSG and RSG) consideration is given to provide adequate tube area to ensure that the residual heat removal rate is achieved with natural circulation flow.

Whenever the boron concentration of the RCS is reduced, plant operation will be such that good mixing is provided in order to ensure that the boron concentration is maintained uniformly throughout the RCS.

Although mixing in the pressurizer will not be achieved to the same degree, the fraction of the total RCS volume which is in the pressurizer is small. Thus the pressurizer liquid volume is of a minor concern with respect to its effect on boron concentration.

Also, the design of the RCS is such that the distribution of flow around the system is not subject to the degree of variation which would be required to produce nonhomogeneities in coolant temperature or boron concentration as a result of areas of low coolant flow rate. An exception to this is the pressurizer; the surge line has been evaluated for thermal issues as necessary.

The range of coolant temperature variation during normal operation is limited and the associated reactivity change is well within the capability of the rod control group movement.

For design evaluation, the heatup and cooldown transients are analyzed by using a rate of temperature change equal to 100°F per hour which corresponds to abnormal or emergency heatup and cooldown conditions. Over certain temperature ranges, fracture prevention criteria will impose a lower limit to heatup and cooldown rates.

Before plant cooldown is initiated and during the plant cooldown process, the boron concentration in the RCS is adjusted to meet or exceed the shutdown margin requirements as specified in the plant's Technical Specifications.

It is therefore concluded that the temperature changes imposed on the RCS during its normal modes of operation do not cause any abnormal or unacceptable reactivity changes.

The design cycles as discussed in the preceding section are conservatively estimated for equipment design purposes and not intended to be an accurate representation of actual transients or for all cases reflect operating experience.

Certain design transients, with an associated pressure and temperature curve, have been chosen and assigned an estimated number of design cycles for the purpose of equipment design. These curves represent an envelope of pressure and temperature transients on the RCS boundary with margin in the number of design cycles chosen based on operating experience.

To illustrate this approach the reactor trip transient can be mentioned. Four hundred design cycles are considered in this transient. One cycle of this transient would represent any operational occurrence which would result in a reactor trip. Thus, the reactor trip transient represents an envelope design approach to various operational occurrences.

This approach provides a basis for fatigue evaluation to ensure the necessary high degree of integrity for the RCS components.

System hydraulic and thermal design parameters are used as the basis for the analysis of equipment, coolant piping, and equipment support structures for normal and upset loading conditions. The analysis is performed using a static model to predict deformation and stresses in the system. Results of the analysis give six generalized force components, three bending moments and three forces. These moments and forces are resolved into stresses in the pipe in accordance with the applicable codes. Stresses in the structural supports are determined by the material and section properties assuming linear elastic small deformation theory.

In addition to the loads imposed on the system under normal and upset conditions, the design of mechanical equipment and equipment supports requires that consideration also be given to abnormal loading conditions such as seismic and pipe rupture.

Analysis of the reactor coolant loops and support systems for seismic loads is based on a three dimensional, multi-mass elastic dynamic mode. The appropriate level floor spectral accelerations are used as input forcing functions to the detailed dynamic model which includes the effects of the supports and the supported equipment. The loads developed from the dynamic model are incorporated into a detailed loop and support model to determine the support member stresses.

The dynamic analysis employs the displacement method, lumped parameter, stiffness matrix formulations and assumes that all components behave in a linearly elastic manner. Seismic analyses are covered in detail in Section 3.7.

Analysis of the reactor coolant loops and support systems for blowdown loads resulting from a loss of coolant accident is based on the time history response of simultaneously applied blowdown forcing functions on a broken and unbroken loop dynamic model. The broken loop is the loop where the auxiliary line nozzle (surge, accumulator, or RHR) has broken. The unbroken loops are the other three loops where no breaks have occurred. The forcing functions are defined at points in the system loop where changes in cross section or direction of flow occur such that differential loads are generated during the blowdown transient. Stresses and loads are checked and compared to the corresponding allowable values.

The stresses in components resulting from normal sustained loads and the worst case blowdown analysis are combined with the worst case seismic analysis to determine the maximum stress for the combined loading case. This is considered a very conservative method since it is highly improbable that both maxima will occur at the same instant. These stresses are combined to determine that the reactor coolant loops and support system will not lose its intended functions under this highly improbable situation.

Protection criteria against dynamic effects associated with RCS pipe breaks is covered in Section 3.6.

For component fatigue evaluations, in accordance with the ASME Boiler and Pressure Vessel Code, maximum stress intensity ranges are derived from combining the normal and upset condition transients given in Paragraph 5.2.1.1 in a conservative manner. The stress ranges and number of occurrences are then used in conjunction with the fatigue curves in the ASME Boiler and Pressure Vessel Code to get the associated cumulative usage factors.

The criterion presented in the ASME Boiler and Pressure Vessel Code is used for the fatigue failure analysis. The cumulative usage factor is less than 1.0 and hence the fatigue design in adequate.

The reactor vessel vendor's stress report includes a summary of the stress analysis for regions of discontinuity analyzed in the vessel, a discussion of the results including a comparison with the corresponding code limits, a statement of the assumptions used in the analysis, descriptions of the methods of analysis and computer programs used, a presentation of the actual hand calculations used, a listing of the input and output of the computer programs used, and a tabulation of the references cited in the report. The content of the stress report is in accordance with the requirements of the ASME Boiler and Pressure Vessel Code and all information in the stress report is reviewed and approved by Westinghouse.

The Westinghouse analysis of the original steam generator tube-tubesheet complex is included as part of the stress report requirement for ASME Code Class 1 nuclear pressure vessels. The evaluation is based on the stress and fatigue limitations outlined in ASME Section III. Similar analysis has been performed for the replacement steam generators for Unit 1 and Unit 2.

The stress analysis techniques utilized include all factors considered appropriate to conservative determination of the stress levels utilized in evaluation of the tube sheet complex. The analysis of the tube sheet complex includes the effect of all appurtenances attached to the perforated region of the tube sheet which are considered appropriate for conservative analysis of the stresses for evaluation on the basis of the ASME Code Section III stress limitations. The evaluation involves the heat conduction and stress analysis of the tube sheet, channel head, secondary shell structure for particular steady design conditions for which code stress limitations are to be satisfied and for discrete points during transient operation for which the temperature/pressure conditions must be known to evaluate stress maximum and minimum for fatigue life usage.

The steam generator tube-tubesheet complex integrity is verified for both the OSG and RSG by analysis for most adverse conditions resulting from a rupture of either primary or secondary piping.

For a secondary piping rupture event, the primary to secondary differential pressure is less than the primary hydrotest differential pressure. The faulted condition allowable for the tube-tubesheet complex exceeds the hydrotest allowable. For this condition the membrane and bending stresses in the ligaments of the tubesheet satisfy the ASME Section III limits for this faulted event. In the case of a primary pressure loss accident, the secondary-primary pressure differential is significantly lower than the primary-secondary maximum pressure differential. Analysis shows that no stress in excess of those covered by the ASME Boiler and Pressure Vessel Code for faulted conditions are experienced by the tube sheet for this accident.

The tubes have been designed to the requirements of the ASME Boiler and Pressure Vessel Code assuming 2485 psi as the design pressure differential. Hence, neither a primary nor a secondary pressure loss accident imposes stresses beyond that normally expected and considered as normal operation by the Code. ASME Section III and Code Case N-20 establish the allowable external pressure of 1479 psi for the Inconel 690 tubes. The maximum external pressure on the tubes at secondary hydrotest is 1356 psi which is less than the allowable. The ASME Code requirements for external pressure provide adequate margin against collapse.

Consideration has been given to the superimposed effects of secondary side pressure loss and the design basis earthquake loading. For the case of the tube sheet, the design basis earthquake loading will contribute negligible static pressure loading over the tube sheet for the vertical shock. The increase is small when compared to the pressure differentials (up to 3125 psid) for which the tube sheet is designed.

The replacement steam generators supplied by CENP-Westinghouse have triangular tubesheet arrays. Therefore, the tubesheet analysis of the RSGs complies with the rules in the Boiler and Pressure Vessel Code.

A complete tube-tubesheet complex analysis is also performed to verify structural integrity for a primary pressure loss accident plus the design basis earthquake.

Although the Boiler and Pressure Vessel Code provides for rules and techniques in analysis of perforated plates, it should be noted that the stress intensity levels for perforated plate are given for triangular perforation arrays. Westinghouse tube sheets contain square hole arrays. Hence, Westinghouse utilizes its own data and that obtained from Pressure Vessel Research Committee research in square array perforation patterns for development of similar charts for stress intensity factors and elastic constants. The resulting stress intensity levels and fatigue stress ranges are evaluated according to the stress limitation of the code.

The vessels, piping, valves, pumps and supports thereof of the reactor coolant pressure boundary are designated ASME Code Class A.

Loading combination and allowable stresses for ASME Section III Class A components, piping and supports are given in Tables 5.2-1 through 5.2-5.

When the components and systems for the Sequoyah units were being designed, only general design requirements existed for faulted conditions. There were no specific stress limits or associated methods of analysis established for faulted conditions. To provide a conservative basis for the analysis of Class 1 components, the collapse curves given in the PSAR were developed. The criterion represented by the collapse curves have evolved into the criteria of Table 5.2-3 of the FSAR. The methods and criteria in Table 5.2-3 should thus be reviewed with respect to the criterion agreed to in the PSAR, rather than with the more recently derived methods and limits established in the nonmandatory Appendix F of the ASME Code, Section III. These methods of analysis in conjunction with the faulted condition stress limits ensure that the general design requirements of the NRC for faulted conditions are met and the plant can thus be safely shut down under accident conditions.

For the reactor coolant loop and components, the elastic system analysis option of Table 5.2.1-1 was used. Inelastic component analysis was used for the reactor coolant pump support feet.

The pump casing with the pump support feet is shown in Figure 5.2.1-12. The pump foot was analyzed for a set of umbrella loads which are greater than the loads expected in any plant. The umbrella loads are calculated for the faulted condition and each of the maximum of the six load components, F_X, F_Y, . . . , M_Z, are assumed to occur simultaneously.

For example, the maximum F_X is chosen by surveying many past plants, and this is applied simultaneously with the maximum F_X, F_Z,. . ., M_Z, all determined similarly. The actual plant loads are calculated and compared to the umbrella loads. Conformance indicates adequacy of the component for the specific plant application. If conformance is not demonstrated, an individual plant analysis would be performed. Table 5.2.1-22 indicates the relationship between the Sequoyah specific plant loads for four different faulted conditions (from four different break locations) and the umbrella loads for which the pump foot was designed. It is noted that the four specific sets of loads cited here are from large breaks in the main reactor coolant loop piping that had originally been considered in the design of the plants, but have since been eliminated. The actual plant loads are, in themselves, also conservative since the maximum for each of the six load components is determined and assumed to act concurrently with the others. For the LOCA condition, the dynamic time history analyses show that the maximum values of the six load components do not act concurrently. The seismic event, although evaluated by response spectra analysis, is also dynamic and the load component maximums at the foot clearly will not coincide. Note from Table 5.2.1-23 that the umbrella loads are

greater than these actual plant loads by a factor ranging from 1.15 to 24.1. From the preceding discussion, the conservatisms in the actual plant loads and the adequacy of the umbrella loads are therefore demonstrated.

The entire casing foot was analyzed by means of a 3-dimensional stress analysis. The foot model utilized symmetry about the bolt hole radial centerline (Figure 5.2.1-13). The completed model contains 1584 node points and 1518 3-dimensional solid elements with 4088 active degrees of freedom in the model. The 3-dimensional finite elements are a mixture of rectangular prisms, triangular prisms, and tetrahedrons. The vertical side and horizontal plate sections have a minimum of four elements through the thickness. The model therefore yields bending stresses as well as direct stresses through the thickness. The higher stress regions have a finer model mesh consisting of smaller tetrahedrons and triangular prism elements.

The ANSYS computer code (Reference 9) plastic analysis options were employed. The plasticity program is based upon incremental strain equations with the Prandlt-Reuss flow rule (Reference 10). The virgin stress-strain option was used to input the true stress-true strain material curve. To yield the required accuracy, loading increments were computed to keep the size of the plastic strain increments near the size of the material yield strain. The smaller load steps keep the solution process from diverging from the input stress-strain curve.

The resulting faulted condition plastic analysis stress intensity was compared with the Faulted Condition Criteria of $.7S_{UT}$ = 59,650 psi for 304 SS at 600°F. This is the limit for the primary membrane plus bending stress intensities as given in Table 5.2.1-1. Since the foot is similar to a beam type structure, the average stress across the section is very low. The primary bending stresses therefore control. The true ultimate stress, S_{ut}, is determined from the engineering ultimate stress (the engineering stress at the point of maximum load) by assuming constancy of volume. Using this assumption, the true ultimate stress (S_{ut}) is given by:

$$S_{ut} = S_u(1 + \varepsilon)$$

where ε is the engineering strain corresponding to the point of maximum load.

The stresses in the pump foot to casing attachment zone and weld fillet region were not controlling. The maximum stress in the foot occurred in the horizontal plate member near the vertical to horizontal plate intersection and in line with the bolt. Since the faulted allowables are based upon primary

stresses and not peak stresses the stress components in the high stress region were linearized through the plate thickness. The resulting maximum stress intensity of the section was found from these linearized maximum principal stresses. The stress intensity was

$$(\sigma)max = 59{,}614 \text{ psi}$$

which was less than the inelastic allowable.

The maximum localized outer fiber strain corresponding to this stress was approximately 12-14%. The incremental strains, however, for each load step were kept to approximately 0.2%. The

maximum deflection calculated by the statically applied loads was approximately one inch at the radial symmetry line passing through the hole. If geometry modifications had been made for this deflection, the load induced in the high stress regions would have been lowered since the moment arm for the beam-like structure would decrease. The present analysis is therefore considered conservative from the analysis as well as the loads standpoint.

The stress and deflection analysis is based on a static application of loads which are physically short duration, dynamically applied loads. For this reason, the actual deflections due to the short duration peak loads could be expected to be much lower than those calculated by the static analysis. The actual plant loads are also considerably lower than the design loads so that this will further reduce the true magnitude of the deflections.

Pumps and valves are classified as either operative or inactive components for faulted conditions. Operative components are those whose operability is relied upon to perform a safety function as well as reactor shutdown function during the transient or events considered on the respective operating condition categories. Inactive components are those whose operability (e.g., valve opening, or closure pump operation or trip) are not relied upon to perform the system function during the transients or events considered in the respective operating condition category. The reactor coolant pumps are the only pumps in the reactor coolant system boundary that are classified as inactive for pipe rupture. Table 5.2.1-24 list the operative and inactive valves in each line connected to the Reactor Coolant System up to and including the system boundary. The design requirements for active class A valves are as specified in Table 3.2.2-1.

Reactor Coolant Pump overspeed evaluations are covered in Paragraph 5.5.1.3.

Every valve and pump is hydrostatically tested to ASME Boiler and Pressure Vessel Code requirements to insure the integrity of the pressure boundary parts.

5.2.1.5 Computer Codes Used in Analysis

Reactor Coolant Loop Model

The reactor coolant loop (RCL) model is constructed for the WESTDYN computer program. This is a special purpose program designed for the static and dynamic analysis of piping systems with arbitrary loads and boundary conditions. The RCL lumped-mass model represents an ordered set of data that numerically describes the physical system to WESTDYN program.

The spatial geometry of the RCL model is based on the RCL and equipment drawings. The node point coordinates and the incremental lengths of the elements are calculated from these drawings. Node point coordinates are input on network cards and incremental lengths are input on element cards. The lumping of distributed mass of a segment or elbow is accomplished by locating the total mass at the mass center of gravity.

A valid representation of the effect of the equipment motion on the RCL piping and its support system is assured by modeling the mass and stiffness characteristics of the equipment in the overall RCL model. Since the reactor pressure vessel is very massive and relatively rigid, it is represented by a fixed boundary condition for the RCL model except in LOCA analysis, where the RPV motion is applied. The requirement in the time history dynamic analysis, that the external hydraulic forcing functions be applied at only mass points, influences the construction of the steam generator and reactor coolant pump models described below.

The steam generator is represented by a multi-mass, lumped model. The mass points are located so as to ensure they represent the general behavior and frequency response of the equipment.

The reactor coolant pump is represented by a two-mass, lumped model. The lower mass position is located at the intersection of the pump suction and discharge nozzles. The upper mass position is located at a location satisfying the zero, first, and second mass moment for the two-mass RCP model.

Support Structure Models

The equipment support structure models are dual-purpose since they are required: 1) to quantitatively represent in terms of 6 x 6 stiffness matrix the elastic restraints which the supports impose upon the loop and, 2) to evaluate the individual support member stresses due to the forces imposed upon the supports by the loop.

The STAAD and STRUDL computer programs (Reference 1) are used to obtain support stiffness matrices and member influence coefficients for the equipment supports. Unit force along and unit moment about each coordinate axes are applied to the models at the equipment vertical centerline joint. Stiffness analysis are performed for each unit load for each model. Printed output includes all six components of displacement at the joint at which loads are applied and six force components at each end of each member in the support system.

Models for the STAAD and STRUDL computer programs are constructed for the steam generator lower and upper lateral support structures. The structure geometry and member properties are obtained from the certified for construction structural drawings.

Hydraulic Models

Hydraulic models are used to generate time-dependent hydraulic forcing functions used in the analysis of the reactor coolant loop for each break case described in Section 3.6.2 and the break locations are shown in Figure 3.6.2-1.

The hydraulic model is used to define the space-time dependent hydraulic forcing functions generated by the fluid in the primary coolant loops and reactor pressure vessel during a design basis loss-of-coolant accident.

Thrust forces resulting from a postulated LOCA are calculated in two steps, using two digital computer programs. The first program, MULTIFLEX, Reference 13, calculates transient pressure, flow rates, and other coolant properties as a function of time. The second program, THRUST, uses results obtained from MULTIFLEX and calculates the time-history forces at locations where there is a change in either direction or area of flow within the reactor coolant loop. These force-loading locations are shown in Figure 5.2.1-14.

In evaluating the hydraulic forcing functions during a LOCA, the pressure and moment flux terms at the two end surfaces of a control volume are dominant. MULTIFLEX evaluates the local fluid condition, taking into account internal and gravitational terms.

The MULTIFLEX computer code calculates the hydraulic transients within the entire primary coolant system, separately representing both broken and unbroken loops. This hydraulic program considers a

coupled fluid-system interaction by accounting for core support barrel deflection. System depressurization is calculated using the method of characteristics applicable to transient flow of a homogeneous fluid in thermal equilibrium. The ability to treat multiple flow branches and large number of mesh points gives the MULTIFLEX code the required flexibility to represent the various flow passages within the primary RCS. The system geometry is represented by network of one-dimensional flow passages. Further information on this analysis is provided in Topical Report WCAP-8709, Reference 13.

In the THRUST calculation of blowdown forces on the RCL, the entire reactor coolant system is represented by the model employed in the MULTIFLEX program. Twenty-six node points are selected along the model. The vector forces and their components are calculated at these points. There may be one or two blowdown control volumes associated with each force node, depending upon its location. For force nodes, 2, 3, 6, 7, 11, 12, 15, 16, 19, 20, 24, and 25, only a single aperture (flow area) is assigned. For all other nodes, two apertures are assigned. For each aperture, the force is calculated by the equation:

$$F = \left[144(p - p_a) + \frac{G(G)}{g\rho} \right] A$$

where:

p = system pressure, psi

p_a = external pressure, psi

G = mass flow rate, lbm/sec ft2

ρ = density, lbm/ft3

g = gravitational constant, lbm-ft/lb sec2

A = aperture area, ft2

The force components at each aperture are vectorially summed to obtain total force components in the global coordinate system at the nodes. The total force components are stored for use in the static pressure analysis at zero time and dynamic LOCA.

Additionally, the forces representing the thrust and jet forces, which are applied at the nozzle break location, are calculated as:

Thrust force: $F_{thrust} = C\tau \times P_o \times A_e$

where: $C\tau$ = Steady-state thrust coefficient

P_o = Initial pressure

A_e = Break plane area

Jet Force: $F_{jet} = C\tau \times P_o \times A_B \times f \times SF \times FA$

where: $C\tau$ = Steady-state thrust coefficient

P_o = Initial presssure

A_B = Break opening area

f = Fraction of jet interception by target

SF = Target shape factor

FA = Impingement angle factor

Static Load Solutions

The static solutions for deadweight, thermal expansion and pressure load conditions are obtained by using the WESTDYN computer program. The computer input consists of the RCL model, stiffness matrices representing various supports for static behavior, and the appropriate load condition. Coordinate transformations for rotation from the local or support coordinate system to the global system are applied to the stiffness matrices prior to their input.

Normal Mode Response Spectral Seismic Load Solution

The stiffness matrices representing various supports for dynamic behavior are incorporated into the RCL model after transformations for rotation from local to the RCL global system. The response spectra for the 1/2 SSE or SSE load case are applied along the X or Z, and Y axes simultaneously. From the input data, the overall stiffness matrix, of the three-dimensional RCL is generated. The stiffness matrix is manipulated to obtain a reduced stiffness matrix, associated with the mass points only. Using the mass and stiffness matrices, the frequencies and mode shapes are determined. The model participation factor matrix is computed and combined with the appropriate seismic response spectra values to give the amplitude of the model coordinate for each mode. Then the forces, moments, deflections, rotations, support structure reactions and stresses are calculated for each significant mode. The total seismic response is computed by combining the contributions of the significant modes by the square root of the sum of the squares method. Closely spaced modes are combined per methodology in 3.7.3.4.

Time History Dynamic Solution for LOCA Loading

The initial displacement configuration of the mass points is defined by applying the initial steady state hydraulic forces to the unbroken RCL model. For this calculation, the support stiffness matrices for the static behavior are incorporated into the RCL model. For dynamic solution, the unbroken RCL model is modified to simulate the physical severance of the pipe due to the postulated LOCA under consideration. This model includes definition of the support stiffness matrices for dynamic behavior

selected on the basis of anticipated displacement response at the support points. The natural frequencies and normal modes for the modified RCL dynamic model are determined. After proper coordinate transformation to the RCL global coordinate system, the hydraulic forcing functions to be applied at each lumped mass point are stored on magnetic tape for later as input to the FIXFM program.

The initial displacement conditions, natural frequencies, normal modes and the time-history hydraulic forcing functions form the input to the FIXFM program which calculates the dynamic time-history displacement response for the dynamic degrees of freedom in the RCL model. The displacement response is plotted at all mass points. The displacement response at support points is reviewed to validate the use of the chosen support stiffness matrices for dynamic behavior. If the calculated support point response does not match with the anticipated response, the dynamic solution is revised using a new set of support stiffness matrices for dynamic behavior. This procedure is repeated until a valid dynamic solution is obtained.

The time-history displacement response from the valid solution is saved on magnetic tape for later use to compute the support loads and to analyze the RCL piping stresses.

Evaluation of Support Structures

The support loads are computed by multiplying the support stiffness matrix, and the displacement vector, at the support point.

5.2.1.6 Notes on Stress Analysis

5.2.1.6.1 Methods

In addition to the terms related to stress analysis defined by ASME Section III NB-2313, the following are defined.

Elastic analysis is defined as that method which assumes that stress is directly proportional to strain with the constant of proportionality being the modulus of elasticity. For cases of elastic system analysis and elastic component analysis, the stress limits of Table 5.2-3 are conservative and prove the safety of the components or system. Strain limits are not required to assure the safety of the components or system.

Plastic analysis is that method which computes the structural response under given loads by considering nonlinear, irreversible stress-strain relations of the material's behavior. This method considers the strain hardening characteristics of the materials, strain-rate effects, permanent deformations and stress redistribution occurring in the structure.

1. For plastic analysis, the true stress-strain curve determined from a mean value curve for the material used based on at least 3 samples shall be adjusted to correspond to the tabulated value at the appropriate temperature in Table I-2.1 or I-2.2 of the Code and shall be included and justified in the Stress Report.

2. The yield criteria and associated flow rule used in performing a plastic analysis may be either those associated with the maximum shear stress (Tresca) or the distortion energy (Mises) method.

Limit analysis computes the structure collapse load defined by the lower bound theorem of limit analysis. The lower bound limit is defined as that produced from the analysis of an ideally plastic material where deformation increases with no further increase of load.

The stress ratio method is a psuedo-elastic analysis method which may be used as an approximate plastic analysis when the required interaction formulas or curves are available.

1. The formulas and curves of the stress ratio method are developed for specific configuration, for specific loading combinations and for specific materials, considering the strain hardening characteristics of the material. The method may be used for statically or dynamically applied loads.

2. The stress ratio method may be used to determine the maximum loads which may be carried by the structure without exceeding an assigned apparent stress. The symbol used to designate this load is P_R.

The methods of analysis are as follows:

The system or subsystem analysis used to determine the loads which act on components, and which loads are specified in the Design Specification for the specific component, is generally a dynamic analysis because of the nature of the loading postulated. If stress limits are used in the evaluation of the effects of these loads on a component such that significant inelastic response occurs within the component, the original elastic system analysis may require modification. Therefore, the type of system analysis, elastic, or inelastic, as well as the associated component loads, will be specified in the Design Specification.

Components are analyzed using any of the following methods used in evaluating Faulted Conditions, subject to the limits given below:

1. Elastic Analysis
2. Limit Analysis
3. Plastic Analysis
4. Stress Ratio
5. Test

The allowable limits for primary stresses given in Table 5.2-2 are used for the methods specified above with the following considerations:

1. The symbols P_m and P_b do not represent single quantities but rather sets of six quantities representing the six stress components σ_τ, σ, σ_r, τ_{tl}, τ_{lr}, and τ_{rt} combined.

2. Bolts and structural fasteners fabricated with the materials included in Table I-1.1 and I-1.2 of the code must satisfy the same stress limits as the rest of the structures. High strength materials (σ_u > 100,000 psi) are considered separately.

3. The statically applied or equivalent static external pressure is less than 150 percent of that given by the rules of NB-3133, except that the pressure is permitted to be 250 percent of the given value when the ovality is limited to 1 percent or less. When dynamic pressure (load) is involved, a dynamic instability analysis may be performed, in which case the permissible external pressure (load) will be limited to 75 percent of the dynamic instability pressure (load).

4. Deformation limits are outside the scope of this Criteria and should be established in the Design Specifications and/or the Safety Analysis Report, if necessary.

Elastic or plastic system analysis and component stress ratio analysis is an acceptable method of evaluation if the rules used in evaluating the Faulted Conditions are as follows:

1. The component stresses are derived on an elastic basis.

2. The method of evaluation of P_m is acceptable if the apparent stress S_{ap} associated with the loads P_R do not exceed the lesser of 2.4 S_m or 0.70 S_u derived at the approximate temperature for materials included in Table I-1.2 of the Code. For materials included in Table I-1.1 use 0.70 S_u only.

3. The method of evaluation for P_m and P_b is acceptable if the apparent stress S_{ap} associated with the loads P_R in (2) above has been increased by an appropriate factor to account for the type of stress field.

The limits established for the analysis need not be satisfied if it can be shown from the test of a prototype or model that the specified loads (dynamic or static equivalent) do not exceed 80 percent of L_T, where L_T is the ultimate load or load combination used in the test. In using this method, account will be taken of the size effect and dimensional tolerances (similitude relationships) which may exist between the actual component and the tested models to assure that the loads obtained from the test are a conservative representation of the load carrying capability of the actual component under postulated loading for faulted conditions.

5.2.1.6.2 Criteria for Specific Components

For vessels the procedures of Subparagraph 5.2.1.6.1 must be used.

The criteria for supports depends on their type. In these Criteria all component supports are categorized into two separate types:

1. Plate and Shell Type Supports

   Plate and shell type component supports such as vessel skirts and saddles which are fabricated from plate and shell elements and which are normally subjected to a biaxial stress field.

2. Non-Integral (Mechanical) Attachments

   Non-integral attachments are those attachments which are bolted, pinned, or bear on the pressure boundary components, including sliding joints, clamps, cradles, saddles, or straps which mechanically connect to the integral attachment or boundary component and transmits the loadings induced in the component.

For linear structures (frames, beams, columns, trusses, cables, etc.) the following limits may also be used:

1. When the load coefficient method is used, the factor C' to be used in the analysis, for other conditions, should be C' = 0.60. (for design procedures see Part 1 of AISC-69).

2. When the load factor method is used, the load factor should be 1.1 (for design procedures as specified in Part 2 of AISC-69).

For core support structures the procedures of Subparagraph 5.2.1.6.1 are used.

5.2.1.7 Reactor Pressure Vessel Support Loads

5.2.1.7.1 Introduction

This section presents the method of computing the reactor pressure vessel loss of coolant accident (LOCA) support loads and displacements. The structural analysis considers simultaneous application of the time-history loads on the reactor vessel resulting from the reactor coolant loop vessel nozzle mechanical loads, internal hydraulic pressure transients, and reactor cavity pressurization (for postulated breaks in the reactor coolant pipe at the vessel nozzles). The vessel is restrained by reactor vessel support pads and shoes beneath each nozzle (two inlet, two outlet) and the reactor coolant loops with the primary supports of the steam generators and the reactor coolant pumps. The objective of this analysis is to obtain reactor vessel displacements and the reactor vessel supports loads.

Pipe displacement restraints installed in the primary shield wall limit the break opening area of the vessel nozzle pipe breaks to less than 100 square inches. This 100 square inch area was determined to be an upper bound by using worst case vessel and pipe relative motions based on a preliminary analysis of this plant. Detailed studies have shown that pipe breaks at the hot or cold leg reactor vessel support loads and the highest vessel displacements, primarily due to the influence of reactor cavity pressurization. By considering these breaks, the most severe reactor vessel support loads are determined. For completeness, a break outside the shield wall, for which there is no cavity pressurization, is also analyzed; specifically, the pump outlet nozzle pipe break is considered. In summary, three loss of coolant accident conditions are analyzed:

1. Reactor vessel inlet nozzle pipe break
2. Reactor vessel outlet nozzle pipe break
3. Reactor coolant pump outlet nozzle pipe break

5.2.1.7.2 Interface Information

The Tennessee Valley Authority is responsible for reactor containment design and analysis. Stiffness of the primary shield wall beneath the reactor vessel supports was provided by TVA to Westinghouse.

All other input information was developed within Westinghouse. These items are as follows: reactor internals properties, loop mechanical loads and loop stiffness, internal hydraulic pressure transients, asymmetric cavity pressure time history loads, and reactor support stiffness. These inputs allowed formulation of the mathematical models and performance of the analyses, as will be described.

5.2.1.7.3 Loading Conditions

Following the postulated pipe rupture at the reactor vessel nozzle, the reactor vessel is excited by time-history forces. As described, these forces are the combined effect of three phenomena:

(1) reactor coolant loop mechanical loads, (2) reactor cavity pressurization forces and (3) reactor internal hydraulic forces.

The reactor coolant loop mechanical forces are derived from the elastic dynamic analyses of the loop piping for the postulated break. This analysis is described in Section 5.2.1.5. The dynamic reactions on the nozzles of all the unbroken piping legs are applied to the vessel in the RPV blowdown analysis.

Reactor cavity pressurization forces arise for the pipe breaks at the vessel nozzles for the steam and water which is released in the reactor cavity through the annulus around the broken pipe. The reactor cavity is pressurized asymmetrically with higher pressure on the side adjacent to the break. These differences in pressure horizontally across the reactor cavity result in horizontal forces applied to the reactor vessel. Smaller vertical forces arising from pressure on the bottom on the vessel and the vessel flanges are also applied to the reactor vessel. The cavity pressure analysis is described in Section 6.2.

The internals reaction forces develop from asymmetric pressure distributions inside the reactor vessel. For a vessel inlet nozzle break and pump outlet nozzle break, the depressurization wave path is through the broken loop inlet nozzle and into the region between the core barrel and reactor vessel (see Figure 3.9.1-5). This region is called the downcomer annulus. The initial waves propagate up, down and around the downcomer annulus and up through the fuel. In the case of an RPV outlet nozzle break, the wave passes through the outlet nozzle and directly into the upper internals region, depressurizes the core, and enters the downcomer annulus from the bottom of the vessel. Thus, for an outlet nozzle break, the downcomer annulus is depressurized with much smaller differences in pressure horizontally across the core barrel than for the inlet break. For both the inlet and outlet nozzle breaks, the depressurization waves continue their propagation by reflection and transmission through the reactor vessel fluid but the initial depressurization wave has the greatest effect on the loads.

The reactor internals hydraulic pressure transients were calculated including the assumption that the structural motion is coupled with the pressure transients. This phenomena has been referred to as hydroelastic coupling or fluid-structure interaction. The hydraulic analysis considers the fluid-structure interaction of the core barrel by accounting for the deflections of constraining boundaries which are represented by masses and springs. The dynamic response of the core barrel in its beam bending mode responding to blowdown forces compensates for internal pressure variation by increasing the volume of the more highly pressurized regions. The analytical methods used to develop the reactor internals hydraulics are described in Reference 13.

5.2.1.7.4 Reactor Vessel and Internals Modeling

The reactor vessel and internals general assembly is shown in Figure 3.9.1-5. The reactor vessel is restrained by two mechanisms: (1) the four attached reactor coolant loops with the steam generator and reactor coolant pump primary supports and (2) four reactor vessel supports at alternate nozzles. The reactor vessel supports are described in Section 5.5.14 and are shown in Figure 5.5.14-1. The support shoe provides restraint in the horizontal directions and for downward reactor vessel motion.

The reactor vessel model consists of two separate non-linear elastic models connected at a common node. One model represents the dynamic vertical characteristics of the vessel and its internals, and the other model represents the translational and rotational characteristics of the structure. These two

models are combined in the DARI-WOSTAS (Reference 11) to represent motion of the reactor vessel and its internals in the plane of the vessel centerline and the broken pipe centerline.

A model for horizontal motion is shown in Figure 5.2.1-15. Each node has one translational and rotational degree of freedom in the vertical plane containing the centerline of the nozzle attached to the broken pipe and the centerline of the vessel. A combination of beam elements and concentrated masses are used to represent the components including the vessel, core barrel, neutron panels, fuel assemblies, and upper support columns. Connections between the various components are either pin-pin rigid links, translational impact springs with damping, or rotational springs.

The model for vertical motion is shown in Figure 5.2.1-16. Each mass node has one translational degree of freedom. The structure is represented by concentrated masses, springs, dampers, gaps, and frictional elements. The model includes the core barrel, lower support columns, bottom nozzles, fuel rods, top nozzles, upper support columns, upper support structure, and reactor vessel.

The horizontal and vertical models are coupled at the elevation of the primary nozzle centerlines. Node 1 of the horizontal model is coupled with Node 2 of the vertical model at the reactor vessel nozzle elevation. This coupled node has external restraints characterized by a 3x3 matrix which represents the reactor coolant loop stiffness characteristics, by linear horizontal springs which describe the tangential resistance of the supports, and by individual non-linear vertical vessel support by dynamic elements (spring-dashpot system) which provide restraint only in the vertically downward direction.

The supports as represented in the horizontal and vertical models (Figures 5.2.1-15 and 5.2.1-16) are not indicative of the complexity of the support system used in the analysis. The individual supports are located at the actual support pad locations and accurately represent the independent non-linear behavior of each support.

5.2.1.7.5 Analytical Methods

The time history effects of the cavity pressurization loads, internals loads and loop mechanical loads are combined and applied simultaneously to the applicable nodes of the mathematical model of the reactor vessel and internals. The analysis is performed by numerically integrating the differential equations of motion to obtain the transient response. The output of the analysis includes, among other things, the displacements of the reactor vessel and the loads in the reactor vessel supports. The loads from the postulated pipe break on the vessel supports are combined with other applicable faulted condition loads and subsequently used to calculate the stresses in the supports. Also, the reactor coolant loop is analyzed by applying the reactor vessel displacements to the reactor coolant loop model. The resulting loads and stresses in the piping, components and supports are then combined with those from the loop dynamic blowdown analysis and the adequacy of the system is verified. Thus, the effect of vessel displacements upon loop response and the effect of loop blowdown upon vessel displacements are both evaluated.

5.2.1.7.6 Results of the Analysis

As described, the reactor vessel and internals were analyzed for three postulated break locations. The LOCA loads are combined with other applicable faulted condition loads and the total applied loads are obtained. This total combined load is applied to the reactor vessel supporting structure, which is analyzed into two independent components: (1) the U shaped vessel shoe and (2) the cooling box which is the structure between the shoe and the concrete. Final analyses have been performed on the support shoe and the cooling box structure and the results are presented in Section 5.2.1.3.3.

The reactor coolant loop piping was evaluated for the faulted condition as detailed in Section 5.2.1.2. The loads included in the evaluation result from the SSE inertia loading, deadweight, pressure, LOCA loop hydraulic forces, and reactor vessel motion. The stress intensities at all locations were under the faulted condition stress limit. It is therefore, concluded that the reactor coolant loop piping of the unbroken loop or the unbroken legs of the broken loop meets the faulted condition requirements and is capable of withstanding the consequences resulting from a break at the reactor vessel inlet or outlet nozzle.

For the evaluation of the design adequacy of equipment, the maximum loads at the primary equipment nozzles resulting from the analysis of each loading condition were determined. The external loads imposed upon primary equipment by the reactor coolant loop produce stress intensities which are below the faulted condition allowable values.

The effects of the postulated breaks at the reactor vessel inlet and outlet nozzle locations on the CRDMs, reactor vessel internals, RCS component supports, and the reactor core are presented in Sections 5.2.1.7.3, 3.9.3.8, 5.2.1.3.3 and 4.2.1.3.2, respectively.

5.2.2 Over Pressurization Protection

5.2.2.1 Location of Pressure-Relief Devices

Pressure relief devices on the Reactor Coolant System (RCS) comprise the three pressurizer safety valves and two power operated relief valves shown on Figure 5.1-1. These discharge to the pressurizer relief tank by common header. Other relief valves connected to the primary side through auxiliary systems that discharge to the pressurizer relief tank are itemized in Table 5.2.2-1. The secondary side SG overpressure protection is discussed in Section 10.3.

5.2.2.2 Mounting of Pressure-Relief Devices

The pressurizer relief devices and associated piping are designed and installed in accordance with ANSI B31.1-1967, Power Piping Code.

The pressurizer relief devices and associated piping are designed to accommodate the RCS temperatures and pressure attained under all expected modes of plant operations (normal, upset, emergency, and faulted), and to maintain the pipe stresses within allowable limits. See paragraph 3.9.2.5. Specifically, the system is designed to withstand the maximum valve discharge thrust in an upset condition combined with internal pressure, dead weight, and earthquake loads acting simultaneously.

Transient hydraulic forces are imposed at various points in the pressurizer relief system from the time a safety or relief valve begins to open until steady flow is completely developed. A dynamic or time history analysis of the thermal-hydraulic forces for the most critical combination of valves discharging was performed with the aid of computer programs RELAP 5 and REPIPE. In this analysis, the relief system is defined as a network of fluid control volumes connected by flow paths with appropriate considerations of flow condition, energy state, and friction effect. The mass and energy stored in each control volume and flow path are calculated from the basic fluid flow conservation equations.

The dynamic time history is used in a structural analysis performed with the aid of the computer program TPIPE. Utilizing a normal mode theory and a step-by-step direct integration procedure, the complete response time histories of the piping system displacement and member forces are generated. The results of this analysis are subsequently used in the stress combinations for the upset and faulted condition for the piping system.

The RCS design and operating pressure together with the safety, power relief and the pressurizer spray valve setpoints and the protection system setpoint pressures are listed in Table 5.2.2-2.

System components whose design pressure and temperature are less than the RCS limits are provided with overpressure protection devices and redundant isolation means. System discharge from overpressure protection devices is collected in the pressurizer relief tank in the RCS.

5.2.2.3 Report on Overpressure Protection

The pressurizer is designed to accommodate pressure increases (as well as decreases) caused by load transients. The spray system condenses steam to prevent the pressurizer pressure from reaching the setpoint of the power-operated relief valves during a step reduction in power level of ten percent of load.

The spray nozzles are located near the top of the pressurizer. Spray is initiated when the pressure controlled spray demand signal is above a given setpoint. The spray rate increases proportionally with increasing pressure rate and pressure error until it reaches a maximum value.

The pressurizer is equipped with power-operated relief valves which limit system pressure for a large power mismatch and thus prevent actuation of the high pressure reactor trip. The relief valves are operated automatically or manually from the MCR. The operation of these valves also limits the undesirable opening of the spring loaded safety valves. Remotely operated stop valves are provided to isolate the power operated relief valves if excessive leakage occurs. The relief valves are designed to limit the pressurizer pressure to a value below the high pressure reactor trip set point for all design transients up to and including the design percentage step load decrease with steam dump but without reactor trip.

Isolated output signals from the pressurizer pressure protection channels are used for pressure control. These are used to control pressurizer spray and heaters and power operated relief valves.

In the event of a complete loss of heat sink, i.e., no steam flow to the turbine, protection of the RCS against overpressure is afforded by pressurizer and steam generator safety valves along with any of the following reactor trip functions:

1. Reactor trip on turbine trip (if the turbine is tripped)
2. High pressurizer pressure reactor trip
3. Overtemperature ΔT reactor trip
4. Low-low steam generator water level reactor trip.

The ASME code pressure limit is 110 percent of the 2485 design pressure. This limit is not exceeded as discussed in Reference 3. The report describes in detail the pressure relief devices, location, reliability, and sizing. Transient analysis data is provided for the worst cases that require safety valve actuation as well as those cases which do not.

The upper limit of overpressure protection is based upon the positive surge of the reactor coolant produced as a result of turbine trip under full load, assuming the core continues to produce full power. The self-actuated safety valves are sized on the basis of steam flow from the pressurizer to accommodate this surge at a setpoint of 2500 psia and a total accumulation of 3 percent. Note that no credit is taken for the relief capability provided by the power operated relief valves during this surge.

The RCS design and operating pressure safety valve and pressurizer spray valve setpoints and the protection system setpoint pressures are listed in Table 5.2.2-2.

System components whose design pressure and temperature are less than the RCS design limits are provided with overpressure protection devices and/or redundant isolation means. System discharge from overpressure protection devices is collected in the pressurizer relief tank (PRT) in the RCS. The PRT is equipped with rupture disks.

5.2.2.4 <u>RCS Pressure Control During Low Temperature Operation</u>

Administrative procedures have been developed to aid the operator in controlling RCS pressure during low temperature operation. However, to provide a back-up to the operator and to minimize the

frequency of RCS overpressurization, an automatic low temperature over pressure protection (LTOP) system, when manually armed from the main control room, will mitigate the pressure excursion within the allowable pressure limits.

Analysis has shown that one PORV is sufficient to mitigate the pressure excursions produced by anticipated mass and heat input transients. However, redundant protection against such overpressurization event is provided through use of two PORVs. The LTOP mitigation system is required only during low temperature operation and is manually enabled for automatic actuation.

5.2.2.4.1 LTOP System Operation

Two pressurizer power operated relief valves are both supplied with actuation logic, and a normal and emergency power supply to ensure that redundant and independent RCS pressure control back-up feature is provided for the operator during low temperature operations. The feature is normally armed when at low temperature. The LTOP system setpoints for the PORVs are provided in Figure 2-1 of the Pressure Temperature Limit Report (PTLR) for each unit. The LTOP system is contained within the Plant DCS. Refer to Sections 5.5.7, 5.5.10, 5.5.13, 7.6.7, and 9.3.4 for additional information on RCS pressure and inventory control during other modes of operation.

The basic function of the system logic is to continuously monitor RCS temperature and pressure conditions whenever plant operation is at low temperatures. An auctioneered system temperature will be continuously converted to an allowable pressure and then compared to the actual RCS pressure. This system logic will first annunciate a main board alarm whenever the measured pressure approaches within a predetermined amount of the allowable pressure, thereby indicating a pressure transient is occurring. On a further increase in measured pressure, an actuation signal is transmitted to the power operated relief valves when required to mitigate the pressure transient.

5.2.2.4.2 Evaluation of Low Temperature Overpressure Transients

Pressure Transient Analysis

10 CFR 50, Appendix G, establishes guidelines and upper limits for RCS Pressure primarily for low temperature conditions (<350°F). Because the limiting low temperature overpressurization events occur under static shutdown conditions, the steady state cooldown curve (Figure 2-2 in the PTLR for each unit) is used as the Appendix G limit for analysis of LTOPS operation. The LTOP mitigation system discussed above maintains the RCS within these limits as discussed in the following paragraphs.

Transient analyses were performed to determine the maximum pressure for the postulated mass input and heat input events. For the purposes of analysis the RHR system is assumed to be isolated from the RCS per References 26 and 27.

The mass input pressure transient which would occur most frequently during the course of normal plant operation with LTOPs armed, would involve letdown isolation with the charging pumps delivering an input less than or equal to 180 gpm (maximum cleanup flow). However, the mass input analysis was performed assuming letdown isolation with one charging pump operating in the configuration producing the maximum possible delivery rates for the RCS system pressure (40 gpm to 500 gpm). This more unlikely event and more severe configuration was chosen to provide additional system flexibility for pressure control. Mass injection events, which could potentially produce higher injection rates than the overpressure mitigation system is capable of mitigating, are prevented from occurring by locking out the required valves and pumps. The administrative controls are included in the plant procedures.

The heat input transient analysis is performed over the entire RCS shutdown temperature range. This analysis assumes an inadvertent start of a reactor coolant pump with a 50°F mismatch between the RCS and the temperature of the hotter secondary side of the steam generators with the RCS in a water solid condition.

Both heat input and mass input analyses took into account the single failure of one PORV therefore, only one Power Operated Relief Valve (PORV) was assumed to be available for pressure relief. The evaluation of the transient results concludes that the allowable limits will not be exceeded and therefore will not constitute an impairment to vessel integrity and plant safety. Framatome ANP has conducted LTOP safety analyses with replacement steam generators (RSGs) and have concluded that the acceptance criteria are met and system integrity is assured following steam generator replacement.

5.2.2.4.3 Operating Basis Earthquake (OBE) Evaluation

A fluid systems evaluation has been performed considering the potential for overpressure transients following an Operating Basis Earthquake (OBE).

The power-operated relief valves have been designed in accordance with the ASME code to provide integrity required for the reactor coolant pressure boundary. They have been analyzed for accident loads and for loads imposed by seismic events and have been shown to maintain their integrity. Therefore, the PORVs will be available to provide pressure relief following an OBE.

5.2.2.4.4 Administrative Procedures

Administrative procedures are provided to manually arm the LTOP system described to mitigate the pressure excursions approaching allowable pressure limits. Operability and surveillance requirements for the LTOP system are provided in the Technical Specifications. Additional administrative procedures are provided as listed below to minimize the potential for any transient that could actuate the LTOP system. Additional requirements for system operation exist while the RHR system is in service and are described in Section 5.5.7.3.3.

Normal plant operating procedures maximize the use of a pressurizer cushion (steam bubble) during periods of low pressure and low temperature operation. This cushion will dampen the plants response to potential transients, providing easier pressure control with the slower response rates.

A pressurizer steam cushion substantially reduces the severity of some potential pressure transients such as reactor coolant pump induced heat input and slows the rate of pressure rise for others. In conjunction with the previously discussed alarms, this provides reasonable assurance that most potential transients can be terminated by operator action before the overpressure relief system actuates.

However, for those modes of operation when water solid operation may still be possible, procedures provide precautions that minimize the potential for developing an overpressurization transient. The following specific recommendations are made:

1. Do not isolate the residual heat removal inlet lines from the reactor coolant loop unless isolation is required to respond to RHRS overpressure events, see Section 5.5.7.3.3. This precaution is to assure there is a relief path from the reactor coolant loop to the residual heat removal suction line relief valves when the RCS is at low pressure and is water solid.

2. Whenever the plant is water solid and the reactor coolant pressure is being maintained by the low pressure letdown control valve, letdown flow must bypass the normal letdown orifices, the valve in the bypass line should be in the full open position. During this mode of operation, all three letdown orifices must also remain open unless LTOPs is operable.

3. If all reactor coolant pumps have stopped for more than 5 minutes during plant heatup, and the reactor coolant temperature is greater than the charging and seal injection water temperature, do not attempt to restart a pump unless a steam bubble is formed in the pressurizer. This precaution will minimize the pressure transient when the pump is started and the cold water previously injected by the charging pumps is circulated through the warmer reactor coolant components. The steam bubble will accommodate the resultant expansion as the cold water is rapidly warmed. This precaution is not applicable to reactor coolant pump operation in Mode 5 when steam generator temperatures on the secondary side are no more than 25 degrees F warmer than the reactor coolant system temperature.

4. If all reactor coolant pumps are stopped and the RCS is being cooled down by the residual heat exchangers, nonuniform temperature distribution may occur in the reactor coolant loops. Do not attempt to restart a reactor coolant pump unless a steam bubble is formed in the pressurizer.

5. During plant cooldown, all steam generators should be connected to the steam header to assure a uniform cooldown of the reactor coolant loops until less than 200 degrees F.

6. At least one reactor coolant pump must remain in service until the reactor coolant temperature is reduced to 160 degrees F.

In addition to Technical Specification requirements for the LTOP system, specific plant operating instructions for plant cooldown and surveillance instructions for ECCS testing include administrative controls and procedures to preclude overpressure transients. These include:

1. To prevent inadvertent ECCS actuation during plant heatup and cooldown, procedures require blocking portions of the safety injection signal actuation logic. The pressurizer and steamline low pressure actuation signals are blocked when RCS pressure is below the P-11 permissive setpoint.

2. The Safety Injection System (SIS) low pressure accumulator isolation valves are closed and tagged with power removed when RCS pressure is reduced below approximately 1000 psig.

3. The Safety Injection pumps are locked out when the RCS temperature is reduced as required by Technical Specifications.

4. One centrifugal charging pump will be locked out when the RCS temperature is reduced as required by Technical Specifications.

5. ECCS pump performance testing in hot shutdown and cold shutdown require charging pump discharge valve closure and RHRS alignment to isolate potential ECCS pump input and to provide backup benefit of the RHRS relief valves.

6. "S" signal circuitry testing (safety injection actuation testing), if done during cold shutdown, requires RHRS alignment and non-operating charging pump power lockout or discharge valve closure to preclude developing cold overpressurization transients.

The above procedural recommendations covering normal operations with a steam bubble, transitional operations where potentially water solid, and by specific cool down and test operations, provide defense in depth augmenting the installed LTOP.

5.2.3 General Material Considerations

5.2.3.1 Material Specifications

The material specifications used for the principal pressure retaining applications in each component comprising the reactor coolant pressure boundary are listed in Table 5.2.3-1 for Class A Primary Components and Table 5.2.3-2 for Auxiliary Components. These materials are procured in accordance with the specification requirements and include supplemental requirements of the applicable ASME Code Rules.

There are four Upper Head Injection (UHI) penetrations in each reactor vessel which terminate inside the shroud. These pipe stub ends are capped; however, one head contains a 3/8" orifice and is used as the RCS vent. The vent vertically exits the shroud and continues as 1 (one) piece above the head platform to preclude pipe rupture concerns (see 5.5.15).

The welding materials used for joining the ferritic base materials of the reactor coolant boundary, conform to or are equivalent to ASME Material Specifications SFA 5.1, 5.5, 5.17, 5.18, 5.20, and 5.23. They are tested and qualified to the requirements of ASME Section III rules.

The welding materials used for joining the austenitic stainless steel base materials of the reactor coolant boundary conform to ASME Material Specifications SFA 5.4, 5.9, 5.14, and 5.22. They are tested and qualified according to the requirements stipulated in Subsection 5.2.5 of this safety analysis report.

The welding materials used for joining nickel-chromium-iron alloy in similar base material combination and in dissimilar ferritic or austenitic base material combination of the reactor coolant boundary conform to ASME Material Specifications SFA 5.11 and 5.14 and Code Case 2142 (SFA 5.14) and 2143 (SFA 5.11). They are tested and qualified to the requirements of ASME Section III rules and are used only in procedures which have been qualified to these same rules.

5.2.3.2 Compatibility With Reactor Coolant

All of the ferritic low alloy and carbon steels which are used in principal pressure retaining applications are provided with a .125 inch minimum thickness of corrosion resistant cladding on all surfaces that are exposed to reactor coolant (individual areas have cladding which is 0.08 inch thick as a result of local grinding). This cladding material has a chemical analysis which is at least equivalent to the corrosion resistance of Types 304 and 316 austenitic stainless steel alloys or nickel-chromium-iron alloy. The other base materials which are used in principal pressure retaining applications which are exposed to the reactor coolant are austenitic stainless steel, nickel-chromium-iron alloy, and martensitic stainless steel. Ferritic low alloy and carbon steel nozzles are safe ended with stainless steel weld metal analysis A-7 or nickel-chromium-iron alloy weld metal F-Number 43 using buttering techniques followed by a post weld heat treatment. The latter buttering material requires further safe ending with austenitic stainless steel base material after completion of the post weld heat treatment when the nozzle is larger than 4-inch nominal I.D. and/or the wall thickness is greater than 0.531 inch.

The cladding on ferritic type base materials receives a post weld heat treatment.

All of the austenitic stainless steel and nickel-chromium-iron alloy base materials are used in the solution anneal heat treat condition. The heat treatments are as required by the material specifications. During subsequent fabrication, these pressure retaining materials are not heated above 800°F other than instantaneously and locally by welding operations. The solution annealed surge line material is subsequently formed by hot bending followed by a resolution annealing heat treatment. Corrosion tests are performed in accordance with ASTM A 393.

5.2.3.3 Compatibility With External Insulation and Environmental Atmosphere

In general, all of the materials listed in Tables 5.2.3-1 and 5.2.3-2, which are used in principal pressure retaining applications and which are subject to elevated temperature during system operation, are in contact with thermal insulation that covers their outer surfaces.

The principle thermal insulation used on the reactor coolant boundary is reflective stainless steel type. When non-metallic insulation is procured for use on austenitic stainless steel reactor coolant pressure boundary piping, Reg. Guide 1.36 will be followed.

In the event of coolant leakage, the ferritic materials will show increased general corrosion rates. Where minor leakage is anticipated from service experience, such as; valve packing, pump seals, etc., materials which are compatible with the coolant are used. These are shown in Tables 5.2.3-1 and 5.2.3-2.

5.2.3.4 Chemistry of Reactor Coolant

The Reactor Coolant System chemistry specifications are given in Table 5.2.3-3.

The Reactor Coolant system water chemistry is selected to minimize corrosion. A periodic analysis of the coolant chemical composition is performed to verify that the reactor coolant quality meets the specifications.

The Chemical and Volume Control System provides a means for adding chemicals to the Reactor Coolant System which control the pH of the coolant during initial startup and subsequent operation, scavenge oxygen from the coolant during startup, control the oxygen level of the coolant due to radiolysis during all power operations subsequent to startup, and modifies the primary system corrosion film layer. The Reactor Coolant water chemistry specifications for power operations are shown in Table 5.2.3-3.

The pH control chemical employed is lithium hydroxide. This chemical is chosen for its compatibility with the materials and water chemistry of borated water/stainless steel/zirconium/Inconel systems. In addition, lithium is produced in solution from the neutron irradiation of the dissolved boron in the coolant. The lithium hydroxide is normally introduced into the Reactor Coolant system via the chemical mixing tank and charging flow. The cation bed demineralizer can be utilized for lithium removal. As the temperature of the reactor coolant increases, the pH of the solution increases due to the hydrolysis of boric acid. The concentration range for Lithium is variable depending on the Boron concentration.

The pH control program used is within the constraints of fuel vendor recommendations and the EPRI PWR primary water chemistry guidelines (Reference 19) and will be specified in site procedures.

During reactor startup from the cold condition, hydrazine is employed as an oxygen scavenging agent. The hydrazine solution is normally introduced into the Reactor Coolant System via the chemical mixing tank and charging flow. Dissolved hydrogen is employed to control and scavenge oxygen produced due to radiolysis of water in the core region. Sufficient partial pressure of hydrogen is maintained in the volume control tank such that the specified equilibrium concentration of hydrogen is maintained in the reactor coolant. A self-contained pressure control valve maintains a minimum pressure in the vapor space of the volume control tank. This can be adjusted to provide the correct equilibrium hydrogen concentration.

Components with stainless steel sensitized in the manner expected during component fabrication and installation will operate satisfactorily under normal plant chemistry conditions in pressurized water reactor systems, because chlorides, fluorides, and particularly oxygen, are controlled to very low levels. The Reactor Coolant System specification limits the chloride and fluoride concentrations to less than 0.15 ppm at all times (regardless of system temperature) to prevent stress corrosion cracking.

During power operation when zinc addition is desired, an aqueous solution of zinc acetate is injected into the RCS via the sample system return line to the VCT for reducing radionuclide content in the primary system corrosion films. Residual zinc level is maintained at 2 - 8 ppb nominal. Cobalt, nickel, and zinc are removed from the RCS by the mixed bed demineralizers via normal letdown.

5.2.4 Fracture Toughness

5.2.4.1 Compliance With Code Requirements

Assurance of adequate fracture toughness of ferritic materials in the reactor coolant system boundary is provided by compliance with Section III of the 1968 ASME Boiler and Pressure Vessel Code. These requirements although different from the requirements of 10 CFR 50 Appendix G (effective date - August 16, 1973) meet all the Sequoyah licensing commitments. The fracture toughness data available for these materials are included in the QA data packages which are available for NRC review. Typical data is included in Westinghouse Topical Report WCAP-7924 along with the Westinghouse method of correlating data of Sequoyah vintage with 10 CFR 50 Appendix G. This report has been accepted by the NRC.

A comparison of the applicable Code versus the 10 CFR 50 Appendix G requirements is discussed below. For pressure retaining ferritic materials (excluding bolting) in the pressurizer and steam generators, Appendix G requires at least 50 ft-lb absorbed energy and 35 mils lateral expansion (by reference to current ASME Code Section III paragraph NB-2330 requirements). The applicable Code requirements include a minimum 20 ft-lb average absorbed energy with no mils lateral expansion requirement for SA 216 Grade WCC and a minimum 30 ft-lb average absorbed energy with no mils lateral expansion requirement for SA 508 Class 2 and SA 533 Grade A Class 1.

A limited review of the steam generator and pressurizer materials has been conducted. In all cases, the ASME Code requirements were satisfied; the following information regarding the Appendix G requirements was gathered:

- For the steam generator channel head castings (A 216 Grade WCC), four out of eight data points exceed the Appendix G requirement of 50 ft-lb, with the values ranging from 21.3 to 76 ft-lb at 10°F. No lateral expansion data is available.

- For the steam generator manway cover material (SA 533 Grade A Class 1), all eight data points exceed the Appendix G 50 ft-lb requirement, with the values ranging from 88 to 110 ft-lb at 10°F. The Appendix G 35 mils requirement is exceeded with the values ranging from 63 to 70 mils. (It should be noted that lateral expansion measurements were not required by the Code.)

- For the pressurizer materials (A 508 Class 2, A 533 Grade A Classes 1 and 2), twenty six out of twenty eight data points exceed the Appendix G 50 ft-lb requirements, with the values ranging from 40 to 102 ft-lb at 10°F. No lateral expansion data is available.

As previously stated, the Sequoyah equipment was fabricated in accordance with ASME Code requirements in effect prior to the effective date of the 10 CFR 50 Appendix G requirements. However, as indicated by this summary of the reviewed data, in most cases the Appendix G minimum ft-lb requirement has been satisfied. Although in most cases lateral expansion data is not available, where it is available, the Appendix G minimum mils requirement has also been satisfied.

Bolting materials meet the fracture toughness requirements of the applicable Code, which although different from the requirements of 10 CFR 50 Appendix G (effective date, August 16, 1973) meet all Sequoyah licensing commitments. The fracture toughness data available for these materials are included in the QA data packages which are available for NRC review. For ferritic materials for bolting with nominal diameters exceeding 1 inch, Appendix G requires at least 45 ft-lb absorbed energy and 25 mils lateral expansion. The applicable Code requirement for SA 193 Grade B7 bolting material is 30 ft-lb absorbed energy with no mils lateral expansion requirement.

A limited review of bolting materials has been conducted. In all cases, the ASME Code requirements were satisfied; the following information regarding the Appendix G requirements was gathered:

- For the steam generator and pressurizer manway bolting material (SA 193 Grade B7), all eleven data points exceed the Appendix G 45 ft-lb requirement, with the values ranging from 65-71 ft-lb at 10°F. No lateral expansion data is available. As previously stated, the Sequoyah equipment was fabricated in accordance with ASME Code requirements in effect prior to the effective date of the 10 CFR 50 Appendix G requirements. However, as indicated by this summary of the reviewed data, the Appendix G minimum ft-lb requirement has been satisfied, but lateral expansion data is not available.

Quality Assurance for materials was in accordance with applicable Code requirements. Dropweight and impact testing was in accordance with ASTM E 208 and ASTM A 370. Appendix IX to the 1968 Code required the manufacturer to qualify subcontractors QA and QC programs. Calibration of test equipment and recording of results were not in accordance with 10 CFR 50 Appendix G because Appendix G was not issued at that time. Calibration and reporting was in accordance with the subcontractors quality control procedures which were received and approved by Westinghouse.

Fracture toughness of the reactor pressure vessel material was established by obtaining NDTT by the drop weight test (ASTM E-208) and Charpy V-notch impact specimens oriented in the strong direction. Formulated methods were used to convert "strong" direction impact data to "weak" direction impact data and to establish RT_{NDT}, (Reference 6). The method of conversion meets 10 CFR Part 50 Appendix G Section III Paragraph 2.A. Weak direction impact data were obtained for materials in the beltline region as part of the surveillance program. Test results for the materials contained in the reactor vessel are given in Table 5.2.4-8. Test results for the materials used in the vessel closure head bolting are given in Table 5.2.4-1.

5.2.4.2 Acceptable Fracture Energy Levels

Initial upper shelf fracture energy levels for the materials of the reactor vessel beltline (including welds) as determined by Charpy V-notch tests on specimens oriented in the "weak" direction of the material were established for the vessel irradiation surveillance test program. No initial upper shelf energy criteria has been established for the beltline materials. However, inservice requirements for these materials will be adhered to in accordance with 10 CFR Part 50, Appendix G, Section V.

5.2.4.3 Operating Limitations During Startup and Shutdown

The reactor coolant system heatup and cooldown curves, PTLR Figures 2-1 and 2-2, were generated in accordance with the methods given in Appendix G. The Unit 2 curves were generated in accordance with Appendix G of Section XI of the 1995 ASME Code (through 1996 Addendum) as updated by Code Case N-640, “Alternate Reference Fracture Toughness for Development of P-T Limit Curves for Section XI, Division 1” dated February 26, 1999. The 10CFR50 Appendix G reactor vessel flange temperature limit was not applied to the curves based on Reference 37. These curves define the allowable pressure limits for the indicted temperature as a function of rate of temperature change. Allowances for instrument error in temperature and pressure measurements have been incorporated into the curves.

The heatup and cooldown curves were calculated using the unirradiated nil ductility transition temperature (RT_{NDT}) of the limiting reactor vessel material adjusted to account for the effects of irradiation in accordance with Regulatory Position 1.1 of Regulatory Guide 1.99, Revision 02. The curves were calculated for reactor vessel radiation exposure associated with 32 EFPYs of operation. Irradiation changes to the material properties were evaluated for the 1/4T and 3/4T (one quarter and three quarters of the vessel wall thickness) locations in the limiting materials to account for a potential flaw at both OD and ID locations.

The methodologies, equations, limiting materials, and other details associated with the calculation of the heatup and cooldown curves are documented in Reference 26 for Unit 1 and Reference 27 for Unit 2.

Appendix G of 10 CFR Part 50 imposes toughness requirements on the reactor vessel throughout life. The toughness requirements are such as to require at least 50 ft-lb Charpy energy absorption normal to the major working direction of the forging throughout life. This requirement is equivalent to requiring a shelf energy of at least 50 ft-lbs or requiring that RT_{NDT} be determined throughout life since RT_{NDT} is defined in terms of the 50 ft-lb level. Based on the results of the final scheduled reactor vessel surveillance program capsule testing (see Section 5.4.3.7) in References 33 and 34, all reactor vessel beltline materials exhibit a more than adequate upper shelf energy level for safe plant operation and will maintain an upper shelf energy greater than 50 ft-lb throughout the life of the vessels (32 EFPY) as required by 10CFR50, Appendix G.

5.2.4.4 Compliance with Reactor Vessel Materials Surveillance Program Requirements

Changes in fracture toughness of the core region forgings, weldments, and associated heat affected zones due to radiation damage will be monitored by a surveillance program which conforms with ASTM E185, “Recommended Practice for Surveillance Tests for Nuclear Reactor Vessels.” ASTM E185-73 is the basis for the original surveillance program; however, removal and evaluation of surveillance capsules are in accordance with ASTM E185-82. The evaluation of the radiation damage in this surveillance program is based on pre-irradiation and post-irradiation testing by Charpy V-notch, and tensile specimens and post-irradiation testing of wedge opening loading specimens carried out during the lifetime of the reactor vessel. Specimens are irradiated in capsules located near the core midheight and are removed from the vessel at specified intervals. For additional details of the irradiation surveillance program refer to Paragraph 5.4.3.7.

5.2.4.5 Reactor Vessel Annealing

See Paragraph 5.4.3.8 for a discussion of reactor vessel annealing.

5.2.4.6 Pressurized Thermal Shock (PTS)

The NRC Unresolved Safety Issue (USI) Task A-49 addresses the situation in which a severe system overcooling event is followed by repressurization of the reactor vessel. The mechanical response of the reactor vessel to the propagation of crack-like defects in the wall depends on the reduction of

fracture toughness due to neutron flux during the operation of the plant. As long as the fracture resistance of the reactor vessel material remains relatively high, an overcooling event will not cause failure. After the fracture toughness of the vessel is reduced by neutron irradiation, thermal transients could cause fairly small flaws to propagate near the inner surface of the vessel.

The vessels of concern are those which have accumulated high neutron radiation exposure and which are made of material that has a high sensitivity to neutron irradiation such as those with welds in the reactor vessel beltline region with high copper content. The base material chemistry, properties, and flaw content should not be ignored.

The reactor system overcooling events that can lead to PTS result from a variety of causes including instrumentation and control system malfunctions and postulated accidents such as small break loss-of-coolant accidents (SBLOCAs), main steam line breaks (MSLBs), feedwater pipe breaks, or stuck open valves in either the primary or secondary system. Rapid cooling of the reactor vessel internal surface causes a temperature gradient across the reactor vessel wall. The temperature gradient results in thermal stresses, with a maximum tensile stress at the inside surface of the vessel and a compressive stress at the outside surface. These stresses combine with the stress caused by the internal pressure in the vessel. The magnitude of the thermal stress depends on the temperature differences across the reactor vessel wall.

In order to threaten the adequacy of core cooling by PTS events, a number of contributing factors must be present. These factors are: (1) a reactor vessel flaw of correct size to propagate, (2) high copper content, (3) a relatively high level of irradiation, (4) a severe overcooling transient with repressurization; and (5) a resulting crack of such size and location that the ability of the reactor vessel to maintain core cooling is affected.

The final PTS rule issued in 10 CFR Part 50.61 dated July 23, 1985, paragraph (b) (2) establishes the screening criteria rule for PTS for all domestic operation PWR plants for the RT_{PTS} reference temperature as follows:

RT_{PTS} 270°F for plates, forgings, axial welds
RT_{PTS} 300°F for circumferential weld materials

The final rule requires that a RT_{PTS} projection be calculated and evaluated to these screening criterion. The RT_{PTS} for beltline materials is sensitive to copper content, nickel content, and initial RT_{NDT}. The RT_{PTS} values are projected for the inner reactor vessel surfaces of the beltline materials from the time of submittal to expiration date of the operating license as required by 10 CFR 50.61.

The beltline materials in Sequoyah units 1 and 2 consist of intermediate forgings, lower forgings, and intermediate-to-lower forging circumferential welds. The copper contents, nickel contents, and initial RT_{NDT}s for units 1 and 2 beltline materials are presented below.

Unit 1	Cu (Percent)	Ni (Percent)	Initial $RT_{NDT(1)}$ (°F)
Intermediate Forging	0.15[2]	0.86[3]	40
Lower Forging	0.13[4]	0.76[4]	73
Circumferential Weld	0.35[4,6]	0.11[4,6]	-40

Unit 2	Cu (Percent)	Ni (Percent)	Initial $RT_{NDT(1)}$ (°F)
Intermediate Forging	0.13[5]	0.76[5]	10
Lower Forging	0.14[2]	0.76[3]	-22
Circumferential Weld	0.12[5]	0.11[5]	-4

[1]These initial RT_{NDT}s are measured values based on Charpy V-notch test and dropweight test. These values are taken from Table 5.2.4-8.

[2]These values are taken from Table 5.2.4-8.

[3]This value is taken from WCAP-12970 (Unit 1) and WCAP-12971 (Unit 2) Heatup and Cooldown Limit Curves for Normal Operations, June 1991.

[4]These values are taken from WCAP-15293, R1 (Sequoyah Unit 1 Heatup and Cooldown Limit Curves for Normal Operation and PTLR Support Documentation, April 2001).

[5]These values were taken from WCAP-15321, R1 (Sequoyah Unit 2 Heatup and Cooldown Curves for Normal Operation and PTLR Support Documentation, April 2001).

[6]The best estimate was determined using data from WCAP-15293 (surveillance weld and three Rotterdam tests averaged together).

The projected RT_{PTS}s are also a function of accumulated neutron fluence at the inner surfaces of the beltline materials. The calculated peak neutron fluence at the inner surfaces of the beltline materials at end-of-life (expiration of operation license) is taken from the results of the 1.3% power uprating program and all past capsule analyses. The neutron fluence analysis and results are documented in the Sequoyah 1 & 2 Power Uprate Licensing Report (Reference 28).

The projected RT_{PTS}s for units 1 and 2 beltline material were determined by using equation 1 in 10 CFR 50.61, paragraph (b) (2), and the resulting values are presented below.

Unit 1	RT_{PTS} (F) 32 EFPY
Intermediate Forging	209
Lower Forging	231
Circumferential Weld	204
Unit 2	
Intermediate Forging	155
Lower Forging	133
Circumferential Weld	143

The projected end-of-life RT_{PTS}s for the forgings meet the screening criteria of 270°F, and the projected end-of-life RT_{PTS}s for the circumferential welds meet the screening criteria of 300°F. Therefore, no further action is required until changes in core loadings, surveillance measurements, or other information indicate a need for updated projections.

5.2.5 Austenitic Stainless Steel

The unstabilized austenitic stainless steel material specifications used for the (1) Reactor Coolant System Boundary, (2) systems required for reactor shutdown, and (3) systems required for emergency core cooling are listed in Tables 5.2.3-1 and 5.2.3-2.

The unstabilized austenitic stainless steel material specifications used for the reactor vessel internals which are required for emergency core cooling for any mode of normal operation or under postulated accident conditions, and for core structural load bearing members are listed in Table 5.2.5-1.

All of the above tabulated materials are procured in accordance with the specification requirements and include supplemental requirements of the applicable ASME Code Rules.

5.2.5.1 Cleaning and Contamination Protection Procedures

It is required that all austenitic stainless steel materials used in the fabrication, installation and testing of nuclear steam supply components and systems be handled, protected stored and cleaned according to recognized and accepted methods and techniques. The rules covering these controls are stipulated in the following Westinghouse Electric corporation process specifications. These process specifications supplement the equipment specification and purchase order requirements of every individual austenitic stainless steel component or system which Westinghouse procures for a nuclear steam supply system, regardless of the ASME Code Classification. They are also given to TVA for use within their scope of supply and activity.

To assure that manufacturers and installers adhere to the rules in these specifications surveillance of operations by Westinghouse personnel is conducted either in residence at the manufacturer's plant and the installer's construction site or during periodic engineering and quality assurance visitations and audits at these locations.

The process specifications which establish these rules and which are in compliance with the more current American National Standards Institute N-45 Committee specifications are as follows:

Process Specification

82560HM Requirements for Pressure Sensitive Tapes for Use on Austenitic Steels.

83336KA Requirements for Thermal Insulation Used on Austenitic Stainless Steel Piping and Equipment.

83860LA Requirements for Marking of Reactor Plant Components and Piping.

84350HA Site Receiving Inspection and Storage Requirements for Systems, Material and Equipment.

84351NL Determination of Surface Chloride and Fluoride on Austenitic Stainless Steel Materials. TVA will apply this specification to piping with an operating temperature over 140°F and will use the acceptance standards of Paragraph 4.3.2, RDT F5-1T, January, 1978, for halogen contamination.

85310QA Packaging and Preparing Nuclear Components for Shipment and Storage.

292722 Cleaning and Packaging Requirements of Equipment for Use in the NSSS.

597756 Pressurized Water Reactor Auxiliary Tanks Cleaning Procedures.

597760 Cleanliness Requirements During Storage Construction, Erection and Start-up Activities of Nuclear Power Systems. TVA will apply this specification to piping with an operating temperature over 140°F.

5.2.5.2 Solution Heat Treatment Requirements

All of the austenitic stainless steels listed in Tables 5.2.3-1, 5.2.3-2 and 5.2.5-1 are procured from raw material producers in the final heat treated condition required by the respective ASME Code Section II material specification for the particular type or grade of alloy.

5.2.5.3 Material Inspection Program

All of the wrought austenitic stainless steel alloy raw materials which require corrosion testing after the final mill heat treatment are tested in accordance with ASTM A 393 using material test specimens obtained from specimens selected for mechanical testing. The materials are obtained in the solution annealed condition.

5.2.5.4 Unstabilized Austenitic Stainless Steels

The unstabilized austenitic stainless steels used in the reactor coolant pressure boundary and components are listed in Tables 5.2.3-1 and 5.2.3-2.

These materials are used in the as-welded condition as discussed in Paragraph 5.2.5.2 of this safety analysis report. The control of the water chemistry is stipulated in Paragraph 5.2.3.4 of this safety analysis report. These chemistry controls coupled with the satisfactory experience with components and internals using unstabilized austenitic stainless steel materials which have been post weld heat treated above 800°F show acceptability of these heat treatments for stainless steel in a PWR chemistry environment (Reference 17). Actual observations of post weld heat treated austenitic stainless steels after actual operation indicate no effects of such treatments. Internals heat treated above 800°F from H. B. Robinson, Unit 2, Zorita, Connecticut Yankee, San Onofre, Beznau 1, Yankee Rowe, Selni, R. Ginna, and SENA have been examined after service and show acceptable material condition.

5.2.5.5 Avoidance of Sensitization

The unstabilized austenitic stainless steels used for core structural load bearing members and component parts of the reactor coolant pressure boundary are processed and fabricated using the most practicable and conservative methods and techniques to avoid partial or local severe sensitization.

After the material has been heat treated as described in Paragraph 5.2.5.2, the material is not heated above 800°F during subsequent fabrication except as described in Paragraph 5.2.3.2 and paragraphs below.

Methods and material techniques that are used to avoid partial or local severe sensitization are as follows:

1. Nozzle Safe Ends

    a. Weld deposit with Inconel (Ni-Cr-Fe weld metal F number 43) then attach safe end after final post weld heat treatment. (This was used for the pressurizer).

    b. Use of a stainless steel weld metal analysis A-7 containing more than 5 percent ferrite. (This was used for the steam generator and reactor vessel.

2. The Unit 1 lower internals core barrel and thermal shield, which are austenitic stainless steel, have been given a stress relieving treatment above 800°F, i.e., a high temperature stabilizing procedure is used. This is performed in the temperature range of 1600-1900°F, with holding times sufficient to allow chromium carbides to go into solution and to limit the effects of sensitization or chromium carbide precipitation in the grain boundary.

The upper half of the Unit 2 lower internals thermal shield has also been stress relieved in the 1600 - 1900°F range. The lower internals core barrel and lower half of the thermal shield for Unit 2 were stress relieved below 800°F.

The upper internals assemblies for Units 1 and 2 do not have any components which have been heat treated above 800°F. The UHI support columns are electron beam welded under a vacuum shield; this welding process does not require a postweld heat treatment. Corrosion studies have shown that this welding process does not sensitize the stainless steel used to manufacture the UHI support columns. Also, this process will not cause dimensional instability of the internals at operating temperatures.

3. All welding is conducted using those procedures that have been qualified to the ASME Code Rules of section III and IX, by nondestructive testing.

    When welding procedure tests are being performed on test welds that are made from base metal and weld metal materials which are from the same lot(s) of materials used in the fabrication of components, additional testing is frequently required to determine the metallurgical, chemical, physical, corrosion, etc. characteristics of the weldment. The additional tests that are conducted on a technical case basis are as follows: light and electron microscopy, elevated temperature mechanical properties, chemical check analysis, fatigue tests, intergranular corrosion tests and static and dynamic corrosion tests within reactor water chemistry limitations.

4. The following welding methods have been tested individually and in multi-process combinations as outlined in (3) above using these prudent energy input ranges for the respective method, as calculated by the following formula:

$$H = \frac{Exlx60}{S}$$

where E = volts
I = amperes
S = Travel Speed in inches/minute
H = Joules/inch

WELDING PROCESS METHOD	ENERGY INPUT RANGE (Kilojoules/inch)
Manual Gas Tungsten Arc	20 to 50
Manual Shielded Metal Arc	15 to 120
Semi-Automatic Gas Metal Arc	40 to 60
Automatic Gas Shielded Tungsten Arc-Hot Wire	10 to 50
Automatic Submerged Arc	60 to 140
Automatic Electron Beam-Soft Vacuum	10 to 50

5. The interpass temperature of all welding methods is limited to 350°F maximum.

6. All full penetration welds require inspections in accordance with Article 6 of the ASME Section III Code rules.

5.2.5.6 Retesting Unstabilized Austenitic Stainless Steels Exposed to Sensitizing Temperatures

In general, it is not feasible to remove samples from fabricated production components to prepare specimens for retest to determine the susceptibility to intergranular attack. These tests are only performed on test welds when meaningful results would predict production material performance and are as described in Paragraph 5.2.5.5 of this safety analysis report. No intergranular tests are planned because of satisfactory service experience (see 5.2.5.4).

5.2.5.7 Control of Delta Ferrite

All austenitic stainless steel welding materials used in joining Class 1, 2, or 3 components procured prior to February, 1976, contain a minimum of 3 percent delta ferrite and those procured since contain a minimum of 5 percent delta ferrite.

The delta ferrite content of welds made with filler metal containing less than 5 percent delta ferrite is determined to ensure that the welds contain a minimum of 3 percent delta ferrite. Delta ferrite content is determined using a magnetic measurement device. Its calibration is traceable through secondary standards to a Magne-Gage and National Bureau of Standards. The delta ferrite content is determined on all welds over 1 inch thick. A statistical sampling plan is used to verify the delta ferrite content of all other welds except single pass welds, welds less than 1/4 inch thick, or fillet welds with a throat thickness of 3/8 inch or less.

If a weld made with filler metal containing less than 5 percent delta ferrite, is shown to contain less than 3 percent delat ferrite, it is either removed or sampled by metallographic examination. If the metallographic examination of the sample reveals no microfissure longer than 1/16 inch, nor more than three fissures between 1/64 and 1/16 inches long in any 0.2 square inch, the weld is considered acceptable.

Until November 1977, the delta ferrite content of welding filler materials was determined from a Schaeffler or Modified Schaeffler diagram using the chemical analysis of a weld deposit made with the flux-filler metal combination used in fabrication. Chemical analysis of base filler materials including consumable inserts, used in inert gas shielded welding processes may have been obtained from the base filler material rather than from a weld deposit.

Since November 1977, delta ferrite content of filler metals has been determined by magnetic measurement of a weld deposit. The deposit is made with the flux-filler metal combination and shielding gas used in production. The magnetic measurement devices are calibrated in accordance with American Welding Society Specification A 4.2.

5.2.6 Pump Flywheel

The integrity of the reactor coolant pump flywheel is assumed by the following analysis.

The flywheel consists of two plates, approximately five inches and eight inches thick, bolted together. Each plate is fabricated from vacuum degassed A-533 Grade B Class I steel. Supplier certification reports are available for all plate materials providing three C_V impact energy values at 10°F parallel and normal to the rolling direction.

Determining acceptability of the flywheel material involves two steps as follows:

1. Establish a reference curve describing the lower bound fracture toughness behavior for the material in question.

2. Use Charpy impact energy values obtained in certification tests at 10°F to fix position of the heat in question on the reference curve.

A lower bound K_{Id} reference curve (see Figure 5.2.6-1) has been constructed from dynamic fracture toughness data generated by Westinghouse (Reference 5) on A-533 Grade B Class I steel. All data points are plotted on the temperature scale relative to the NDT temperature. The construction of the lower bound below which no single test point falls, combined with the use of dynamic data when flywheel loading is essentially static, together represent a large degree of conservatism.

The applicability of a 30 ft-lb Charpy energy reference value has been derived from sections on Special Mechanical Property Requirements and Tests in Article 3, Section III of the ASME Boiler and Pressure Vessel Code. The implication is that the test temperature lies a safe margin above NDT. Flywheel plates exhibit an average value of 30 ft-lbs or greater in the weak direction and, therefore, meet the specific requirement "C.1.a" stated in Regulatory Guide 1.14 that NDT must be no higher than 10°F, one is able to reassign the "zero" reference temperature position in Figure 5.2.6-1 value of 10°F.

Flywheel operating temperature at the surface is 120°F. The lower bound toughness curve indicates a value of 116 ksi-in$^{1/2}$ at the (NDT + 110) position corresponding to operating temperature. Regulatory Guide 1.14 requirement "C.1.e" is fulfilled with considerable margin for safety.

By assuming a minimum toughness at operating temperature in excess of 100 ksi-in$^{1/2}$, it can be seen by examination of the correlation in Figure 5.2.6-1 that the C_V upper shelf energy must be in excess of 50 ft-lb, therefore, the requirement "C.1.b" that the upper shelf energy must be at least 50 ft-lb, is satisfied.

It is concluded that flywheel plate materials are suitable for use and can meet these Regulatory Guide 1.14 acceptance criteria on the bases of supplier's material certification data. To assure pump flywheel integrity, each finished flywheel is qualified ultrasonically examined in accordance with procedures and to acceptance criteria equivalent to those specified for Class 1 vessels in the ASME B&PV Code Section III - Nuclear Power Plant Components. The flywheel design is such that it is accessible for periodic augmented examination. These augmented examination requirements are stated in Regulatory Position C.4.b of Regulatory Guide 1.14.

The calculated stresses at operating speed are based on stresses due to centrifugal forces. The stress resulting from the interference fit of the flywheel on the shaft is less than 2000 psi at zero speed, but this stress becomes zero at approximately 600 rpm because of radial expansion of the hub.

The primary coolant pumps run at approximately 1190 rpm and may operate briefly at overspeeds up to 109% (1295 rpm) during loss of outside load. For conservatism, however, 125% of operating speed was selected as the design speed for the primary coolant pumps.

Precautionary measures taken to preclude missile formation from primary coolant pump components, assure that the pumps will not produce missiles under any anticipated accident condition. Each component of the primary pump motors has been analyzed for missile generation. Any fragments of the motor rotor would be contained by the heavy stator. The same conclusion applies to the pump impeller because the small fragments that might be ejected would be contained by the heavy casing.

5.2.7 RCPB Leakage Detection Systems

The leakage detection systems comply with applicable parts of NRC General Design Criterion 30 and Regulatory Guide 1.45 with the exception of the capability of the air particulate and gas radiation monitors to function after a seismic event. However, the degree of compliance of the total leakage detection systems with Regulatory Guide 1.45 has been evaluated by the NRC and documented in their SER (NUREG 0011) to be an acceptable basis for satisfying the requirements of GDC 30. These systems provide a means of detection, to the extent practical, leakage from the reactor coolant pressure boundary.

5.2.7.1 Methods of Detection

The following methods are used to measure reactor coolant pressure boundary leakage. The methods are not considered Engineered Safety Feature Systems and are not designed to IEEE 279 Criteria. However, certain of the radiation monitors are designed to IEEE 279 Criteria.

5.2.7.1.1 Containment Building Upper Compartment Air Radiation Monitor and Containment Building Lower Compartment Air Radiation Monitor

The containment air from the lower and upper compartments is normally sampled and monitored by separate monitor assemblies. One assembly normally monitors the lower compartment and one assembly normally monitors the upper compartment (for a detailed description of these monitors, see Subsection 11.4.2). Each assembly consists of a particulate and noble gas monitors.

These separate Monitor Systems are interconnected by stainless steel tubing to allow monitoring lower containment by either monitor in case one monitor assembly malfunctions. The particulate and noble gas monitors are each indicated, recorded, and annunciated in the MCR. Visual and audible alarms are initiated on high radiation and instrument malfunction.

The ICS computer utilizes the count rate input signal from these radiation monitors to calculate an ICS computer alarm setpoint to further comply with GDC-30 and Regulatory Guide 1.45. The ICS computer alarm setpoint is calculated with a predetermined percent increase of count rate above a continuous updated hourly background count rate which reflects current plant conditions. When the lower containment one minute current average background count rate exceeds the predetermined percent increase of the hourly averaged background count rate, an ICS computer alarm in the MCR will initiate.

5.2.7.1.2 Humidity Monitoring

The Humidity Detector System offers another means of detecting leakage into the containment. Two humidity sensors (one in lower compartment and one in upper compartment) are installed within each containment. The humidity detectors (one in lower compartment and one in upper compartment) output is recorded in the MCR. Visual and audible alarms are initiated in the MCR on a high rate of increase of moisture content.

The ice condenser has negligible effect on the humidity detector sensitivity for all coolant leaks which do not open the inlet doors.

5.2.7.1.3 Reactor Vessel Flange Leakoff

Leakage between the double O-ring of the reactor vessel main flange is sensed in the leakoff line by a temperature detector. Leakage into the reactor vessel flange is indicated in the MCR. An increase in temperature actuates an audible and visual alarm in the MCR.

5.2.7.1.4 Condenser Vacuum Pump Radiation Monitors

These monitors continuously monitor the mechanical vacuum pump air exhaust for an indication of a primary-to-secondary leak. A description of the operational characteristics is given in Subsection 11.4.2.

These monitors are off-line gas type and the gas is continuously monitored by beta scintillation detectors. The normal and intermediate range monitors are indicated, recorded, and annunciated in the MCR. Visual and audible alarms are initiated in the MCR on high radiation and instrument malfunction.

5.2.7.1.5 Component Cooling System Radiation Monitors

Three monitors continuously monitor downstream of each of the three component cooling heat exchangers for activity levels indicative of a reactor coolant leak from either the RCS or RHR Systems. A description of the operational characteristics is given in Subsection 11.4.2. The monitors are indicated, recorded, and annunciated in the MCR. Visual and audible alarms are initiated in the MCR on high radiation and instrument malfunction. In the event of high activity, the monitors automatically close the component cooling surge tank vent.

5.2.7.1.6 Steam Generator Blowdown Radiation

Radiation monitors are provided on the liquid discharge and provide an indication of a primary-to-secondary leak by sampling the liquid phase of the steam generators secondary side. A description of the operational characteristics is given in Subsection 11.4.2. These monitors are indicated, recorded, and annunciated in the MCR. Visual and audible alarms are initiated on panel in the MCR on high radiation and instrument malfunction. In the event of high activity, the liquid discharge monitors automatically isolate the blowdown discharge.

5.2.7.1.7 Charging Pump Operation and Excessive Makeup Volume

Gross loss of reactor coolant is measured by the charging pump flow rate and unscheduled decreases in the chemical and volume control tank level. The charging pump flow rate is indicated in the MCR. The chemical and volume control tank level is indicated and the low level is annunciated (visual and audible) in the MCR. The pocket sump level change rate is annunciated (visual and audible) for a level change rate exceeding 1 gal/min.

5.2.7.1.8 RB Containment Floor and Equipment Drain Sump

The RB containment floor and equipment drain sump and pocket sump (located outside crane wall) will collect liquid from the containment floor and equipment drains and the containment pit sump (located on the bottom of the reactor cavity). The pit sump pump discharges to the pocket sump. The pocket sump (also called the auxiliary containment floor and equipment drain sump) discharges to the containment floor and equipment drain sump. The RB containment floor and equipment drain sump level is annunciated (visual and audible) on high and low level in the MCR. The pocket sump is also annunciated in the MCR.

A pocket sump is installed inside the RB containment floor and equipment sump in order to separate the drains (Figure 5.2.7-1). The drains are separated and the crane wall is sealed to ensure sufficient post-LOCA water inventory inside the crane wall. The pocket sump pumps can be manually started from the control room upon receipt of a high level alarm. The pumps are stopped either manually from the control room or automatically upon reaching the low water level setpoint. There are two independent level switches to assure positive cutoff of the pump. The containment floor and equipment drain sump pumps stop automatically upon receipt of low sump level or an SI signal.

A break in the Reactor Coolant (RC) System results in an increase in water level in one of the sumps which are monitored by level transmitters. The pocket sump level change rate instrumentation annunciates in the MCR when the level change rate (inches per hour) exceeds a sump inflow rate of 1 gal/min). The sensitivity is such that a 1 gal/min inflow rate can be detected in approximately 1 hour.

The pocket sump complies with Regulatory Guide 1.45, Rev. 0. However, the environmental conditions during power operations and the physical configuration of lower containment will obstruct the total RCS leakage from entering the pocket sump directly and subsequently, will lengthen the sump's level response time. The reactor coolant unidentified leakage during normal power operations will (1) initially flash into steam and become trapped between the system piping and the RCS piping insulation, (2) as the leakage progresses, it will exit the insulation and enter a turbulent lower containment atmosphere imposed by the Reactor Building Lower Compartment HVAC that will impede RCS leakage condensation and accumulation, (3) subsequently, a portion of the leakage inventory must be blown through unsealed crane wall penetrations above 693' into the Raceway due to the turbulent containment atmosphere, (4) and the portion of the leakage inventory forced into the Raceway may condense and remain isolated from the pocket sump for detection. As the leakage

conditions approach a state of equilibrium with respect to the environmental conditions and the physical configuration inside lower containment, and the RCS leakage begins to enter the sump, the instrumentation has the sensitivity to detect a one gallon per minute leakrate within one hour. Subsequently, RCS pressure boundary leakage detection by the pocket sump will typically occur following other means of leakage detection discussed in FSAR 5.2.7. Given these conditions, it may be difficult for the pocket sump to detect an actual one gallon per minute RCS leak within one hour.

5.2.7.1.9 Main Steam Line Rad Monitors

See Section 11.4.2. These monitors are post accident, but may be used to identify a ruptured SG with a high leak rate.

5.2.7.1.10 Leak Detection/Valve Position Indication

The PORVs and safety valves are provided with various positive valve position indications. The valve position indication systems meet seismic and environmental qualification requirements as specified by the NRC for Sequoyah. An alarm in the main control room indicates when any valve is not in the fully closed position.

1. The positive indication of the PORV position is obtained by an electromagnetic "Reed"-switch (single channel for each PORV). Additional indications that a PORV is not fully closed is provided by accelerometers (acoustic monitors) attached to the PORV tail piping.

2. The position indication of the PORV block valve is obtained from gear limit switches on the respective block valve.

3. Position indication for the safety valves is provided by accelerometers (acoustic monitors) (single channel for each valve) attached to the safety valve tail piping.

The Sequoyah design incorporates only a single channel of positive position indication for each safety valve. In accordance with the NRC position and clarification, TVA has backup methods of determining valve positions installed; these include temperature sensors downstream of each valve, pressurizer relief tank temperature/pressure/level indicators and pressurizer high pressure sensors. All the above instrumentation is indicated and alarmed in the main control room. These methods have also been incorporated into the plant operating procedures.

5.2.7.2 Deleted (combined into 5.2.7.1)

5.2.7.3 Limits for Reactor Coolant Leakage

Limits for reactor coolant leakage rates are described in the technical specifications.

5.2.7.4 Characteristics of the Leakage Detection Methods

Containment Air Particulate Monitors

Particulate activity resulting from abnormal leakage is normally detected by the Containment Building lower compartment air monitor. The response time of the air particulate monitors is dependent upon many factors although for most leakage locations it is limited to a minimum of approximately 120 seconds. This is the time required for mixing inside the lower compartment plus transit time to the detector. (If leakage occurs very near one of the sample inlets, the minimum response time could approach 50 seconds.) Particulate activity is detected by means of a plastic beta scintillator which views a constantly moving filter paper. This filter paper is exposed to the air stream pumped from the containment atmosphere. The response time of the particulate monitor is also dependent on the abnormal leakage rate, normal baseline leakage, fraction of particulates which escape the leakage water, the amount of plate out on containment surfaces, the collection rate of the filter mechanism, and the amount of corrosion product and fission product activity in the coolant. The amount of fission product inventory in the reactor coolant depends on the fraction of failed fuel, fission product inventory in the failed fuel, escape rates from fuel to coolant of the fission products in the failed fuel, and reactor coolant processing history.

The particulate channel of the normal range lower compartment atmosphere monitor will detect a 1 gpm increase in primary coolant leakage in less than 1 hour when the baseline leakage is 1% RCM/day for 3 months. A 1 gpm leak can be detected in less than 7 minutes if there is no baseline leakage. Thus the particulate channel satisfies the requirements of Regulatory Guide 1.45. Increasing the containment purge frequency would decrease the background seen by the particulate channel and would decrease the response time. However, since the initial count rate in the particulate channel is mainly from Rb-88, and the Rb-88 activity reaches equilibrium in about a day, the containment purge frequency has only a small effect on the response time. See FSAR Reference 5.2.9.18.

Containment Radioactive Gas Monitor

Radioactive gas resulting from abnormal leakage is normally monitored by the Containment Building Lower Compartment Air Monitor System; the detector is a plastic beta scintillator. As in the case of the particulate monitor, the response time of the gas detector has an absolute minimum value which lies somewhere between 50 and 120 seconds. The response time is the sum of this minimum and a time which is dependent on the abnormal leakage rate, normal baseline leakage, and the amount of gaseous fission product activity in the coolant. While less important than in the case of the particulate detector, the frequency of containment purging is also a consideration.

The noble gas detection response capability will vary significantly depending on the containment background count rate, the higher the lower containment atmosphere background count rate the slower the detector response. The detection of RCS leakage with the noble gas monitors ultimately is a function of the quantity of isotopes that are contained in the RCS. For situations where there is little or no activity (such as when there are no fuel leaks and/or at startup), these monitors cannot satisfy the 1 gpm leakage detection (since there is no activity to detect). Contrarily, for situations where fuel leaks and RCS leakage has occurred simultaneously for example at 1%RCM/day for 3 months, it may be difficult for these monitors to satisfy the 1 gpm leakage detection. This is due to the masking affect high containment atmosphere background activity will have on a new RCS leakrate. Other methods of RCS leakage detection specified in Regulatory Guide 1.45 would be necessary as discussed in FSAR 5.2.7. However, given anticipated RCS radioisotope levels, these monitors meet the intent of Regulatory Guide 1.45. See FSAR Reference 5.2.9.18.

Humidity Monitoring

Humidity Detector System is sensitive to leakage of the order of 2 to 10 gal/min depending on the cooling water temperature, containment air temperature variation, and containment air recirculation rate. It is also sensitive to both radioactive and nonradioactive discharge. The humidity detector itself has a sensitivity of ± 2 percent absolute humidity. Response time for the system ranges from approximately 10 minutes for a 10 gal/min leak to about 50 minutes for a 2 gal/min leak. The system is an indirect indication of leakage to the containment, in accordance with NRC Regulatory Guide 1.45.

Condenser Vacuum Pump Monitors

Gaseous activity in the secondary system resulting from a primary-to- secondary leak is detected by these monitors. The detectors are plastic beta scintillators which monitor pump exhaust flow enroute to a vent pipe located atop the Turbine Building (see Subsection 11.3.7 for a detailed description of the vent). The response time of these monitors to detect an increase in leakage is dependent upon transit time from the point of leakage to the monitor, baseline leakage, the increase in leakage rate, and the amount of fission product gaseous activity in the primary coolant.

With no preexisting (baseline) leakage present, the condenser vacuum pump normal range monitor can detect in one hour a less than 0.1 gpm leak of reactor coolant containing radioactivity corresponding to ANSI/ANS-18.1-1984 activities modified for Sequoyah parameters into the secondary side. This leak rate is much less than the Regulatory Guide 1.45 minimum detection criterion of 1 gpm within one hour. The minimum detectable leak rate at equilibrium (about 7 days after the start of the leak) is less than 0.1 gpm. (See Reference 20.)

A baseline leak, plus any additional leakage up to a total leakage of 1 gpm, is detectable in less than one hour after the increase in leakage begins.

Component Cooling System Monitors

These monitors detect leakage into the Component Cooling (CC) System from the RC System during power operation or from the Residual Heat Removal (RHR) System during plant cooldown. The monitors are of the off line type; the detectors are gamma scintillators. A complete description of the operational characteristics is given in Subsection 11.4.2. The monitor response time is dependent upon the time needed for transport from point of leakage to point of detection, the leakage rate, and the amount of fission product and corrosion product activity in the primary coolant.

Sequential isolation of various components after detection of leakage can be used to identify the point of leakage within a relatively short time. The monitors provide an effective means of detection and identification of the source of a 1 gal/min leak. This is consistent with the guidance provided in Regulatory Guide 1.45, Rev. 0.

Detection of activity in the CC System water does not always indicate leakage from the RC System pressure boundary since leakages from radioactive systems, other than the RC System or the RHR System, that are served by the CC System may also produce detector response after a period of time. However, since the activities in these other systems will generally be much less than reactor coolant activity, the leakages will, of necessity, need to be much larger to produce the same monitor

response that leakage from the RC System or the RHR System would produce. Leakage from these other systems that result in activity detection would result in large changes in the CC System surge tank level. (See Reference 23.)

Steam Generator Blowdown Liquid Discharge Monitor

Combined samples from each of the four steam generators are continuously monitored for radioactivity by means of an off-line Radiation Monitoring System; the detectors are gamma scintillators. A complete description of the operational characteristics of this monitoring system is given in Subsection 11.4.2. The monitor response time is dependent upon mixing time in the steam generator secondary side water volume, transit time to the monitor, steam generator blowdown rate, abnormal leakage rate, and the amount of fission product and corrosion product activity in the primary coolant.

With no preexisting (baseline) leakage present, the steam generator blowdown liquid discharge monitor can detect a primary-to-secondary leak, containing radioactivity corresponding to ANSI/ANS-18.1-1984 values modified for Sequoyah parameters, of less than 0.1 gpm at minimum blowdown conditions one hour after the leak begins. This leakage detection capability is within Regulatory Guide 1.45 RO guidelines. The minimum detectable leak rate at equilibrium (1 day) for maximum blowdown conditions is less than 0.1 gpm. (See Reference 21.)

With baseline leakage at minimum or maximum blowdown conditions, the monitors can detect a new leak of up to 1 gpm in less than one hour after the increase in leakage begins.

Gross Leakage Monitoring

Gross leakage is indicated by the abnormal charging pump operation, abnormal containment sump pump operation, containment sump level rise, and reactor coolant liquid inventory. These are generally useful only for detection of leaks much larger than 10 gal/min.

Through-wall Flow

The length of a through-wall crack that would result in a detectable increase in the normal leakage rate is a function of pipe wall thickness, crack opening width, and pipe roughness. Detectable crack length has been calculated and is reported in Reference 8. Figures F-5 and F-6 of the referenced report show detectable leakage crack length as a function of detectable leakage rate. Figure F-5 presents curves for longitudinal cracks in various sizes of pipe, i.e., various wall thicknesses; and Figure F-6 presents similar curves for circumferential cracks. Knowing the detectable leakage rate, the detectable crack length can be determined from these figures.

Margins of Safety

Margins of safety for a detectable crack to assure critical size are also tabulated in Reference 8. Safety margins for circumferential and longitudinal cracks are listed for several sizes of pipe in Table 6-5 of that report.

Margins of safety are based on the percent increase in length required for a detectable crack to become a critical crack. The minimum value listed, 25 percent, occurs for a circumferential crack in a 2-inch RC System pipe. The increase in leakage rate for this case is 86 percent above the detectable rate. Longitudinal flows in the 2-inch pipe and flows in larger diameter pipes result in larger margins of safety.

Criteria

Components of the Leakage Detection System have been described in preceding paragraphs. Built-in redundancy and diversity is a key factor in the system. Various types of detectors serve to supplement one another, since the range of each detector either overlaps or duplicates the range of other detectors. Detector sensitivities are such that they provide the capability to sense a leak well before the leakage becomes unacceptable.

Using several types of detectors with various sensitivities results in a system more than adequate to detect abnormal leakage. Multiple types of sensors assure early leak detection in case of failure of one or more types, thereby assuring that the margin of safety as discussed above will not be exceeded.

5.2.7.5 Maximum Allowable Identified Total Leakage

The maximum allowable identified leakage rate of reactor coolant is 10 gal/min as specified by the SQN Technical Specifications.

Leakage is made up by the Charging System. The ratio of makeup capacity to identified leak rate is 15 for each of the two centrifugal charging pumps.

Leakage from the RC System is collected in the Reactor Building floor and drain sump, and is pumped to the Waste Disposal System in the Auxiliary Building by one or both sump pumps. The minimum ratio of pumpout rate to identified leak rate is 5.

5.2.7.6 Differentiation Between Identified and Unidentified Leaks

Typically leakage into the RB pocket sump is considered unidentified leakage until the source is identified. The leakage from the reactor vessel main flange leaks between the double O-ring seal until the leakoff initiates a high temperature alarm in the MCR. The reactor coolant pump seals are equipped with temperature sensors to detect leakage through the seals.

The CC System liquid radiation monitors give indication of a leak from either the RC System or the RHR System into the CC System. Leakage from the RC System during normal power operation may occur via the nonregenerative letdown heat exchanger. Identification of a leaking RHR heat exchanger can be made by alternately isolating the heat exchanger and noting any change in the rate of increase of the component cooling liquid activity.

The steam generator blowdown and condenser vacuum pump radiation monitors give an indication of primary-to-secondary leakage. Specific determination of the leaking steam generator may then be accomplished by individual sampling of each of the steam generators for activity through the use of the remotely operated valves in each of the steam generator blowdown lines. This procedure will take only a few minutes and will provide rapid determination of the leaking steam generator since the activity in the secondary of the leaking steam generator will initially be higher than in the secondaries of the other steam generators.

If the humidity detector detects an increase in containment moisture without a corresponding increase in activity level, the indicated source of leakage may be judged to be a nonradioactive system except when the reactor coolant activity level may be low.

5.2.7.7 Sensitivity and Operability Tests

Periodic testing of leakage detection systems will be conducted to verify the operability and sensitivity of the detection equipment.

The containment radiation, steam generator blowdown, condenser vacuum pump air exhaust, and component cooling monitors will have operational, response, and calibration tests performed per the test description presented in Subsection 11.4.4.

Calibration and response checks for the other leakage detection systems during reactor operation will be performed according to a predetermined schedule.

5.2.7.8 ECCS Intersystem Leakage

Leakage from the RC System into low pressure portions of several ECCS lines is prevented by the use of two check valves in series. The check valves are tested for leakage in accordance with the applicable surveillance instructions. The probability of a major leak through any pair of check valves will therefore be limited to approximately 5.5×10^{-9} per reactor year (as indicated in Reference 14). This probability is low enough to eliminate any concern for a major intersystem leak into low pressure ECCS Systems. However, means are available to continuously monitor and alarm intersystem leakage across the interfaces between the RC System and the following: Cold Leg Accumulators (CLA), Chemical and Volume Control System (CVCS), Safety Injection System (SIS), and RHR System. Leakage into these systems can be detected both by monitoring for signs of incoming leakage and by monitoring the RC System for signs of outgoing leakage.

Incoming and outgoing leakage is described in greater detail in the two following subsections:

ECCS In-Leakage

1. Intersystem leakage across the two check valves in each of the four CLA lines would increase the liquid inventory in the respective four accumulator tanks. Two level sensors are provided on each accumulator each having continuous indication and alarm available in the MCR. The time span required to identify this leakage and also the leakages discussed across the check valves in the other system is a function of the leakage rate across the check valves. However, since level indication is continuously available in the MCR, indication of the increasing level would be available in the MCR at all times.

2. There are no intersystem leakage problems of practical concern in the CVCS because of the high system design pressure for the interfacing CVCS piping and because the CVCS will generally be at a higher pressure than the RC System to provide the normal charging and seal injection functions.

3. Intersystem leakage across the two check valves in each of the four SIS cold leg injection lines or across the two check valves and one normally closed gate valve in each of the four SIS hot leg injection paths would increase the pressure in those segments of the lines. A separate pressure sensor is provided in each of the two SIS pump discharge lines with indication continuously available in the MCR. The two pump discharge lines are connected with a normally open crossover line so a pressure increase in this segment would be detectable by either sensor.

Three pressure relief valves are provided that discharge to the PRT. Discharge into this tank would increase the tank level, pressure, and temperature. A level sensor is provided on the tank having both continuous indication and alarm available in the MCR. A pressure sensor is provided on the PRT having both continuous indication and alarm available in the MCR. In addition, a temperature sensor is provided on the PRT having both continuous indication and alarm in the MCR.

4. Intersystem leakage across the two check valves in each of the four RHR System cold leg injection lines or across the two check valves and one normally closed gate valve in each of the two RHR System hot leg injection paths would increase the pressure in those segments of the lines. The two pump discharge lines are connected with a normally open crossover line so pressure increase in this segment would be sensed by three pressure relief valves also provided for these RHR System lines. The relief valves discharge to the pressurizer relief tank. Leakage into this tank is monitored continuously as described for the SIS leakage. The source of the intersystem leakage can be confirmed by local inspection of the 3 headers/relief valves and/or utilizing the SIS test system.

RC System Out-Leakage

At steady state power operation, intersystem leakage from the RCS would reduce the system inventory and affect inventory control operations. Monitoring of the RCS inventory and inventory control operations would enable significant leakage to be detected. If signs of this significant leakage were not observed in the primary containment, it could be assumed that it was intersystem leakage and possibly into the ECCS. Monitoring the RCS would not aid in identifying the leakage path. At steady state, intersystem leakage would cause the pressurizer level to drop which would automatically increase the CVCS charging pump flow rate. A flow element is provided in the common discharge of the two charging pumps with indication in the MCR. The CVCS Volume Control Tank (VCT) level would drop due to increased charging flow rate. When a VCT low level setpoint was reached, automatic makeup would be initiated. A level sensor is provided on the VCT having both continuous indication and alarm in the MCR. In addition to monitoring the inventory control operations, an RCS inventory balance is performed periodically during steady state operation in accordance with the technical specifications.

If the leakage detection methods described above indicate that the ECCS check valves have excessive leakage, the permanent test lines provided in the system design could be used to determine the amount and identify the location of the leakage. The technical specifications provide actions for reactor shutdown and repair of the check valves should allowable leakage limits be exceeded.

5.2.8 Inservice Inspection Program

The TVA ASME Section XI Inservice Inspection Programs for Sequoyah Nuclear Plant outline requirements for performing the inservice examinations of the ASME Code Class 1, 2, and 3 (Equivalent) components (and their supports) containing water, steam, or radioactive material (other than radioactive waste management systems) and ASME Code Class MC and CC (Equivalent) components. The programs have been organized to fulfill inservice examination requirements of applicable QA program documents and to comply as practical with the requirements of Section XI of the ASME Boiler and Pressure Vessel Code except where specific relief has been granted by the NRC. In addition, this program implements applicable portions of the Sequoyah Nuclear Plant technical specifications.

5.2.8.1 Provisions for Access to Reactor Coolant Pressure Boundary

The reactor coolant pressure boundary is designed to the extent practical for provisions for access for examinations as required by ASME Section XI. Any limitations of examinations will be handled in accordance with the Inservice Inspection Program, ASME Section XI, and 10CFR50-55a.

Consideration has been given to the inspectability of the Reactor Coolant System in the design of components, in the equipment layout, and in the support structure to permit access for the purpose of inspection. Access for inspection is defined as access for examination by direct or remote means and/or by contacting vessel surfaces during nuclear unit shutdown.

Reactor Vessel

Access for inspection of the reactor vessel is as follows:

1. The vessel flange area, closure head, and outlet nozzles can be examined during normal refueling operations. All reactor internal components can be removed to allow examination of the reactor internal surfaces and welds to the extent practical.

2. The closure head is stored dry during refueling to facilitate direct visual, surface, and volumetric examinations. Typically, reactor vessel studs, nuts, and washers are removed to dry storage during refueling; and are available for direct visual, surface, and volumetric examinations as applicable.

3. Inner surfaces of the vessel flange-to-upper-shell-weld (1); shell welds (3); lower-shell-to-bottom-head-weld (1); bottom-head-spherical-ring-meridional-welds (6); bottom-head-dollar-plate-weld (1); nozzle-to-shell-welds (8); and the nozzle inner radius area (8), are examined by remote means from the vessel inside surface. Only the outlet nozzles are accessible during normal refueling. The lower internals (core barrel) must be removed to access the other reactor vessel welds and vessel interior surfaces for remote examination.

4. External surfaces of the vessel nozzle-to-piping welds can be examined following removal of access covers and insulation.

Pressurizer

The external surface will be accessible for surface and volumetric examination to the extent practical. Manways are provided to allow access for internal examination.

Steam Generator

The external surfaces of the steam generator are accessible for surface and/or volumetric examination to the extent practical. The primary and secondary sides of the steam generator can be examined internally by direct or remote visual means by removing manway covers. The manway covers on the lower head also allow access for the volumetric examination of the tubing.

Reactor Coolant Pumps

The external surfaces of the pump casings are accessible for examination. The internal surface of the pump is available for examination by removing the pump internals.

Piping

The reactor coolant piping, fittings, and attachments to the piping external to the primary shield will be accessible for external surface and volumetric examination to the extent practical.

Design and Construction Phase

During the design and construction phase, consideration was given to provide access as practical to equipment to be examined as listed below:

1. 100 percent of reactor vessel welds and surface (either from the inside or outside, or a combination of both).

2. Reactor vessel internals.

3. Welds on other Class A vessels.

4. Reactor coolant piping welds.

5. Interior surfaces of other Class A vessels.

6. Reactor coolant pump casings.

7. External coolant pump casings.

8. Integrally welded supports.

9. Mechanical connection supports.

10. Control rod drive penetrations.

5.2.8.2 Equipment for Inservice Inspection

TVA will use remote ultrasonic scanning equipment for the examination of reactor vessel nozzles and welds for both the preservice and inservice inspections.

The ultrasonic scanners shall be indexed to ensure position reproducibility for future examinations.

5.2.8.3 Recording and Comparing Data

5.2.8.3.1 Remote Automated Reactor Vessel Inspection Equipment

Sequoyah will use an electronic recording system to record the ultrasonic data.

5.2.8.3.2 Manual or Automated Inspections

The manual or automated scanning technique may be used to examine the welds in the reactor vessel closure head, steam generator primary heads, pressurizer, and piping. All reportable indications are mapped giving necessary parameters for locating and comparing future examination results.

5.2.8.4 Reactor Vessel Acceptance Standards

Acceptance of the reactor vessel for service shall follow the guidelines set forth in IWA-3000 of Section XI of the ASME Code.

5.2.8.5 NRC Order for Augmented Reactor Pressure Vessel (RPV) Head Inspections

NRC's Order (References 29 and 35) has been withdrawn as of December 17, 2008, when TVA ASME Section XI Inservice Inspection Program for Sequoyah Nuclear Plant was revised to incorporate the examination requirements from ASME Code Case N-729-1.

These inspections are implemented and controlled at SQN by various site procedures. In those cases when it is determined either before or during an inspection of a specific nozzle in which the required coverage cannot be obtained (e.g., visual inspection criteria, or NDE coverage, etc.), TVA will submit a relief request in accordance with 10CFR50.55(a)(3), as prescribed in the Order.

5.2.9 Borated Water Corrosion (BWC) Program Description

NRC Generic Letter (GL) 88-05, "Boric Acid Corrosion of Carbon Steel Reactor Pressure Boundary Components in PWR Plants," indicates that boric acid leakage potentially affecting the integrity of reactor coolant pressure (RCP) boundary should be procedurally controlled to ensure continued compliance with the licensing basis. TVA letters to NRC dated June 1, 1988 and July 29, 1988 provided TVA's commitment to this program. This program is implemented at SQN by various site procedures.

5.2.10 References

1. R. D. Logcher and B. B. Flachsbart, "ICES STRUDL-II, The Structural Design Language Frame Analysis," MIT-ICES-R68-91, Vol. 1, November 1963.

2. F. Bordelon and A. Nahavandi, "A Space-Dependent Loss of Coolant Accident and Transient Analysis for PWR Systems (SATAN Digital Computer Code)," WCAP 7750, January 1972.

3. M. A. Mangan, "Overpressure Protection for Westinghouse Pressurized Water Reactors," WCAP 7769, October 1971.

4. J. A. Nay, "Topical Report, Process Instrumentation for Westinghouse Nuclear Steam Supply Systems," WCAP 7671, April 1971.

5. W. O. Shabbits, "Dynamic Fracture Toughness Properties of Heavy Section A-533 Grade B Class 1 Steel Plate," WCAP 7623.

6. W. S. Hazelton, et al., "Basis for Heatup and Cooldown Limit Curves," WCAP 7924, July 1972.

7. R. A. Wiesemann, R. E. Tome, and R. Salvatori, "Ultimate Strength Criteria to Ensure No Loss of Function of Piping and Vessels Under Earthquake Loadings," WCAP 5890, Rev. 1.

8. J. J. Szy Slow Ski and R. Salvatori, "Determination of Design Pipe Breaks for Westinghouse Reactor Coolant System," WCAP 7503, Rev. 1.

9. G. J. DeSalvo and J. A. Swanson, "ANSYS User's Manual," Engineering Analysis Systems Report, October 1, 1972.

10. A Mendelson, Plasticity: Theory and Application, The MacMillan Company, New York, 1968.

11. "Documentation of Selected Westinghouse Structural Analysis Computer Codes," WCAP 8252, April 1974.

12. "Pipe Breaks for the LOCA Analysis of the Westinghouse Primary Coolant Loop," WCAP 8082-P-A (proprietary) WCAP 8172-/a (nonproprietary) January 1975.

13. K. Takeuchi, et. al., "MULTIFLEX - A Fortran-IV Computer Program for analyzing Thermal-Hydraulic-Structure System Dynamics," WCAP 8708, February 1976 (Proprietary) and WCAP-8709, September 1977 (Non-Proprietary).

14. "Probabilistic Analysis of the Interfacing System Loss-of-Coolant Accident and Implications on Design Decisions," "Nuclear Technology," Vol. 37, January 1978.

15. Tennessee Valley Authority, ASME Section XI, Inservice Inspection Program, Sequoyah Nuclear Plant.

16. P. K. Nair, "Reactor Vessel Material Surveillance Program for Sequoyah Unit No. 1 Analysis of Capsule U," SWRI 06-8851, October 1986.

17. M. A. Golik, "Sensitized Stainless Steel in Westinghouse PWR Nuclear Steam Supply Systems," WCAP 7477, March 1970.

18. Tennessee Valley Authority Engineering Calculation SQN APS3-055, "Reactor Coolant Pressure Boundary Leakage Detection with the Containment Lower Compartment Air Radiation Monitor."

19. Electric Power Research Institute (EPRI), "PWR Primary Water Chemistry Guidelines," EPRI Research Project 2493.

20. Calculation SQNAP53-058, “Steam Generator Leakage Detection with the Condenser Vacuum Pump Air Exhaust Monitor (1,2-RM-90-119)”

21. Calculation SQNAP53-056, “Minimum Detectable Leak Rate for the Steam Generator Blowdown System”

22. NRC letter to TVA dated April 24, 1992 (A02 920429 005), "Sequoyah, Browns Ferry, Watts Bar, and Bellefonte - Standardizing Nondestructive Examination Procedures With the 1986 Edition of the ASME Boiler and Pressure Vessel Code (TAC M82171)."

23. Calculation SQNAPS3-099, “Reactor Coolant Pressure Boundary Leakage Detection Component Cooling System Radiation Monitors - 0,1,2-RE-90-0123.”

24. Deleted

25. Deleted

26. WCAP-15293, Revision 02, "Sequoyah Unit 1 Heatup and Cooldown Limit Curves for Normal Operation and PTLR Support Documentation," July 2003.

27. WCAP-15321, Revision 02, “Sequoyah Unit 2 Heatup and Cooldown Limit Curves for Normal Operation and PTLR Support Documentation,” July 2003.

28. WCAP-15726, Revision 00, “Sequoyah Units 1 and 2 1.3% Power Uprate Licensing Report,” November 2001.

29. NRC letter to Holders of Licenses for Operating PWRs as listed in Attachment to the Enclosed Order, dated February 11, 2003 (L44030218002), “Issuance of Order Establishing Interim Inspection Requirements for Reactor Vessel Heads at PWRs.”

30. TVA letter to NRC, dated February 27, 2003 (L44030227801) responding to NRC’s Order EA-03-009, dated February 11, 2003.

31. NRC J. Strosnider’s letter to A. Marion, Nuclear Energy Institute (NEI) dated November 21, 2001.

32. Deleted

33. WCAP-15224, Revision 00, “Analysis of Capsule Y from Tennessee Valley Authority Unit 1 Reactor Vessel Radiation Surveillance Program,” June 1999.

34. WCAP-15320, Revision 00, “Analysis of Capsule Y from Tennessee Valley Authority Unit 2 Reactor Vessel Radiation Surveillance Program,” December 1999.

35. NRC letter to Holders of Licenses for Operating PWRs as listed in Attachment to the Enclosed Order, dated February 20, 2004 (L44040227001), “Issuance of First Revised NRC Order (EAO-030-009) Establishing Interim Inspection Requirements for Reactor Pressure Vessel Heads at Pressurized Water Reactors.”

36. TVA letter to NRC dated March 9, 2004 (S64040309802) responding to NRC’s revised EA-03-009, dated February 20, 2004.

37. WCAP-15984-P, Revision 01, Reactor Vessel Closure Head/Vessel Flange Requirements Evaluation for Sequoyah Units 1 and 2," April 2003.

38. Westinghouse Design Specifications, S1RSG-CD-C201, Revision 2, “Design Specification for Replacement Steam Generators for TVA Sequoyah Nuclear Power Plant Unit 1” (B88 021009 800) and S2RSG-CD-C201, Revision 2, “Design Specification for Replacement Steam Generators for TVA Sequoyah Nuclear Power Plant Unit 2” (L30 130111 010).

TABLE 5.2-1

LOAD COMBINATIONS AND OPERATING CONDITIONS

	Load Combination	Operating Conditions
1.	Normal (deadweight, thermal and pressure)	Normal Condition
2.	Normal and 1/2 safe shutdown earthquake	Upset Condition
3.	Normal and safe shutdown earthquake	Faulted Condition
4.	Normal and design basis accident	Faulted Condition
5.	Normal and safe shutdown earthquake and design basis accident	Faulted Condition

TABLE 5.2.1-1 (Sheet 1)

SUMMARY OF REACTOR COOLANT SYSTEM CYCLIC OR TRANSIENT LIMITS

CONDITION	CYCLIC OR TRANSIENT LIMIT	DESIGN CYCLE OR TRANSIENT
Normal	200 heatup cycles at ≤ 100°F/hr and 200 cooldown cycles at < 100°F/hr per unit	Heatup cycle - T_{avg} from ≤ 200°F to ≥ 550°F. Cooldown cycle -T_{avg} from ≥ 550°F to ≤ 200°F
	200 pressurizer cooldown cycles at < 200°F/hr per unit	Pressurizer cooldown cycle temperatures from > 650°F to < 200°F.
	13,900 loading and unloading power changes per unit at 5% per minute, for RSGs (See Note 1)	> 15% of Rated Thermal Power to 100% of Rated Thermal Power
	2000 step load increases and decreases of 10% per unit (See Note 2)	> 15% of Rated Thermal Power to 100% of Rated Thermal Power
	200 large step load decreases of 95%	From 100% of Rated Thermal Power
	3.0E6 of steady state fluctuations for RSGs (See Note 3)	RCS temperature changes of ±6°F per minute at T_{avg}, (T_{avg} + 3°F)
Upset	80 loss of load cycles, without immediate turbine or reactor trip	> 15% of RATED THERMAL POWER to 0% of RATED THERMAL POWER
	40 cycles of loss of offsite A.C. electrical power (blackout with natural circulation in the RCS)	Loss of offsite A.C. electrical power source supplying the onsite ESF Electrical System
	80 cycles of loss of flow in one reactor coolant loop	Loss of only one reactor coolant pump at 100% of Rated Thermal Power
	400 reactor trip cycles	100% to 0% of Rated Thermal Power.
	10 pressurizer auxiliary spray actuation cycles	Spray water temperature differential > 320°F and < 560°F
	200 cycles of 1/2 Safe Shutdown Earthquake	Reactor Vessel
	50 cycles of 1/2 Safe Shutdown Earthquake	Steam Generator and Pressurizer
	10 low temperature water-solid overpressure events**	Water-solid system actuation

Faulted Conditions*	**Occurrences**
Main reactor coolant pipe break	1
Steam pipe break	1
Steam generator tube rupture	Included in 400 reactor trip cycles from full power
Safe Shutdown Earthquake	1

Test Conditions	**Occurrences**
Turbine roll test	10
Hydrostatic test conditions	
a. Primary side pressurized to 3110 psig	10
b. Secondary side pressurized to 1360 psig	10
c. Primary side leak test pressurized to 2485 psig	200

TABLE 5.2.1-1 (Sheet 2)

SUMMARY OF REACTOR COOLANT SYSTEM CYCLIC OR TRANSIENT LIMITS

NOTES

* In accordance with ASME Boiler and Pressure Vessel Code, Section III, faulted conditions are not included in fatigue evaluations.

** Low Temperature Over Pressure events are not specified in the Upset Conditions for the Unit 1 RSGs. Refer to design specification S1RSG-CD-C201, Revision 2 (Reference 38) for details.

1. Since a limit of 13,900 cycles for loading and for unloading is permitted by fatigue calculations, the allowed normal loading and unloading transient cycles are NOT expected to be challenged during the extended life of the plant. Therefore, this transient is NOT recorded by monitoring instructions.
2. Over a 60-year plant life, 2,000 step load increases/decreases equates to more than one (1) allowed per week. Due to the stability of the TVA grid, step load changes of +/-10 percent seldom occur. Therefore, this transient will NOT be recorded by monitoring instructions.
3. This cyclic limit equates to approximately 6 cycles per hour for 60 years. Since 6 cycles per hour bounds SQN normal operation for 60 years of plant life, this transient will NOT be recorded by monitoring instructions.

TABLE 5.2.1-22

FAULTED CONDITION LOADS FOR
THE REACTOR COOLANT PUMP FOOT

(1)	Fx	Fy	Fz	Mx	My	Mz
Umbrella	± 3305	± 3400	± 2605	± 7059	± 4010	± 7083
Case 1	137	-1068	- 154	1212	-350	-5440
Case 2	282	615	1008	-6135	-329	1291
Case 3	192	-2044	687	-5843	-329	1190
Case 4	287	-1097	261	-4025	-339	-3301

(1) These four cases represent the largest loading conditions on the pump foot:

Case 1: Pad #1, SGONB

Case 2: Pad #2, SGONB

Case 3: Pad #2, XLHRS

Case 4: Pad #3, XLHRS

TABLE 5.2.1-23

RATIO BETWEEN UMBRELLA LOADS AND ACTUAL LOADS

(1)	Fx	Fy	Fx	Mx	My	Mz
Case 1	24.1	3.2	16.9	5.8	11.5	1.30
Case 2	11.7	5.5	2.6	1.15	12.2	5.5
Case 3	17.2	1.7	3.8	1.21	12.2	5.9
Case 4	11.5	3.1	9.9	1.75	11.8	2.1

(1) These four cases represent the largest loading conditions on the pump foot:

Case 1: Pad #1, SGONB

Case 2: Pad #2, SGONB

Case 3: Pad #2, XLHRS

Case 4: Pad #3, XLHRS

TABLE 5.2.1-24

OPERATING AND INACTIVE VALVES IN THE REACTOR COOLANT SYSTEM BOUNDARY

Line	Valve Type	O - Operating I - Inactive	Normal Position	Post-LOCA Position	Isolation Signal (For Operating Valves)
RHR Suction	1) Motor gate	I	Closed (interlocked with RCS pressure)	Closed	I
	2) Motor gate	I	Closed (locked out at Power breaker)	Closed	I
Loop Drains	1) Manual globe	I	Closed	Closed	I
(each loop)	2) Manual globe	I	Closed	Closed	I
Charging	1) Check	O	Open	Closed	Flow Direction (Wp)
	2) Check	O	Open	Closed	Flow Direction (Wp)
RHR Return	1) Check	O	Closed	Open - for lowhead injection	Flow Direction (Wp)
(each loop)				and accumulator injection	
	2) Check	O	Closed	Open - for lowhead injection	Flow Direction (Wp)
Accumulator	1) Check	O	Closed	Open - for accumulator and	Flow Direction (Wp)
				lowhead injection	
	2) Check	O	Closed	Open - for accum injection.	Flow Direction (Wp)
SIS - Injection	1) Check	O	Closed	Open - for injection.	Flow Direction (Wp)
Tank	2) Manual gate	I	Open	Open	I
(each loop)	3) Check	O	Closed	Open - for injection.	Flow Direction (Wp)
Hot leg conn.	1) Check	O	Closed	Open - for highead recirculation	Flow Direction (Wp)
(each loop)	2) Check	O	Closed	Open - for highead recirculation	Flow Direction (Wp)
Excess Letdown	1) Manual globe	I	Open (locked)	Open	I
	2) Air-op globe	O*	Closed (fail close)	Closed	Remote Manual
	3) Air-op globe	O*	Closed (fail close)	Closed	Remote Manual
Letdown	1) Manual globe	I	Open	Open	I
	2) Air-op globe	O	Open (fail close)	Closed - low PRZ Level signal	Low PRZ level/interlocks
	3) Air-op globe	O	Open (fail close)	Closed - low PRZ Level signal	Low PRZ level/intrelocks
Alt Charging	1) Check	0*	Closed	Closed	Flow Direction (Wp)
	2) Check	0*	Closed	Closed	Flow Direction (Wp)
PRZ Relief	1) Motor gate	I	Open	Open	I
Valves to PRT	2) Solenoid	I	Closed (fail close)	Closed (fail close)	I
PRZ Safety Vlvs	1) Safety Valve	I	Closed	Closed	I
Auxiliary Spray	1) Check	0*	Closed	Closed	Flow Direction (Wp)
(from CVCS)	2) Air-op globe	0*	Closed (fail close)	Closed	Remote Manual

*There is a possibility for these valves to be open when the accident occurs.

TABLE 5.2-2

LOADING CONDITIONS AND STRESS LIMITS: CLASS A COMPONENTS

LOADING CONDITIONS	STRESS INTENSITY LIMITS	NOTE
1. Normal Condition	(a) $P_m \leq S_m$	
	(b) $P_L \leq 1.5\ S_m$	
	(c) P_m (or P_L) + $P_B \leq 1.5S_m$	1
	(d) P_m (or P_L) + P_B + $Q \leq 3.0S_m$	2
2. Upset Condition	(a) $P_m \leq S_m$	
	(b) $P_L \leq 1.5S_m$	
	(c) P_m (or P_L) + $P_B \leq 1.5S_m$	1
	(d) P_m (or P_L) + P_B + $Q \leq 3.0S_m$	2
3. Faulted Condition	(i) $P_m \leq 1.2S_m$ or S_y, whichever is larger $P_L \leq 1.5\ (1.2)\ S_m$ or $1.5S_y$, whichever is larger, and (ii) Faulted condition limits in Table 5.2-3.	3

where:

P_m = primary general membrane stress intensity
P_L = primary local membrane stress intensity
P_B = primary bending stress intensity
Q = secondary stress intensity
S_m = stress intensity value for ASME B&PV Code, Section III, Nuclear Vessels, 1968
S_y = minimum specified material yield (ASME B&PV Code, Section III, 1968, Table N-421 or equivalent)

Note 1: The limits on local membrane stress intensity ($P_L \leq 1.5S_m$) and primary membrane plus primary bending stress intensity (P_M (or P_L) + $P_B \leq 1.5S_m$) need not be satisfied at the specific location if it can be shown by means of limit analysis or by tests that the specified loadings do not exceed 2/3 or the lower bound collapse load per paragraph N-417.6(b) of the ASME B&PV Code, Section III, Nuclear Vessels, 1968.

Note 2: In lieu of satisfying the specific requirements for the local membrane ($P_L \leq 1.5S_m$) or the primary plus secondary stress intensity (P_M (or P_L) + P_B + $Q \leq 3S_m$) at a specific location, the structural action may be calculated on a plastic basis and the design will be considered to be acceptable if shakedown occurs, as opposed to continuing deformation, and if the deformations prior to shakedown do not exceed specified limits, as per paragraph N-417.6(a)(2) of the ASME B&PV Code, Section III, Nuclear Vessels, 1968.

Note 3: The limits on local membrane stress intensity ($P_L \leq 1.8S_m$ or $1.5S_y$) and primary membrane plus primary bending stress intensity (P_M (or P_L) + $P_B \leq 1.8\ S_m$ or $1.5\ S_y$) need not be satisfied at a specific location if it can be shown by means of limit analysis or by tests that the specified loadings do not exceed 120 percent of 2/3 of the lower bound collapse load as per paragraph N-417.10(c) of the ASME B&PV Code, Section III, Nuclear Vessels, 1968, Summer 1968 Addenda.

TABLE 5.2.2-1

RELIEF VALVE DISCHARGES TO THE PRESSURIZER RELIEF TANK

Reactor Coolant System (Figure 5.1-1)

3	Pressurizer Safety Valves
2	Pressurizer Power Operated Relief Valves

Safety Injection System (Figure 6.3.2-1)

1	RHR Pump Discharge to Hot Leg Injection
2	RHR Pump Discharge to Cold Leg Injection
2	SIS Pump Discharge to Hot Legs
1	SIS Pump Discharge to Cold Legs
1	SIS Pump Suction Line

Residual Heat Removal System (Figure 5.5.7-1)

1	RHR Pump Suction Line from Loop 4

Chemical and Volume Control System (Figure 9.3.4-1)

1	Charging Pump Suction Header
1	Seal Water Return Line
1	Letdown Line

Containment Spray System (Figure 6.2.2-1)

2	Containment Spray Pump Suction Lines

TABLE 5.2.2-2

REACTOR COOLANT SYSTEM DESIGN PRESSURE SETTINGS

	Pressure, psig
Hydrostatic Test Pressure	3107
Design Pressure	2485
Safety Valves	2485
High Pressure Trip	2385
Power Relief Valves	2335
High Pressure Alarm	2310
Pressurizer Spray Valves (Begin to Open)	2260
Pressurizer Spray Valves (Full Open)	2310
Operating Pressure (at pressurizer)	2235
Low Pressure Alarm	2210
Low Pressure Trip	1970
Backup Heaters On	2210
Proportional Heaters (Begin to Operate)	2250
Proportional Heaters (Full Operation)	2220

TABLE 5.2-3 (Sheet 1)

FAULTED CONDITION STRESS LIMITS FOR CLASS A COMPONENTS

System (or Subsystem) Analysis	Component Analysis	Stress Limits for Components		Test
		P_m	$P_m + P_h$	
Elastic	Elastic	Smaller of $2.4S_m$ and $0.70S_u$	Smaller of (2) $3.6S_m$ and $1.05S_u$	$0.8L_T$ (3) (4)
	Plastic	Larger of (3) $0.07S_u$ or $S^y + 1/3\ (S_u-S_y)$	Larger of (3) $0.70S_{ut}$ or $S_y + 1/3\ (S_{ut}-S_y)$	
Plastic	Limit Analysis	$0.9L_1$	(3) (1)	
	Plastic	Larger of $0.70S_u$ or $S_y + 1/3\ (S_u-S_y)$	Larger of $0.70S_{ut}$ or $S_y + 1/3\ (S_{ut}-S_y)$	
	Elastic			

TABLE 5.2-3 (Sheet 2)

Notes for Table 5.2-3

(1) L_1 = Lower bound limit loads with an assumed yield point equal to $2.3S_m$.

(2) These limits are based on a bending shape factor of 1.5 for simple bending cases with different shape factors, the limits will be changed proportionally.

(3) When elastic system analysis is performed the effect of component deformation on the dynamic system response should be checked.

(4) L_T = The limits established for the analysis need not be satisfied if it can be shown from the test of a prototype or model that the specified loads (dynamic or static equivalent) do not exceed 80 percent of L_T, where L_T is the ultimate load or load combination used in the test. In using this method, account shall be taken of the size effect and dimensional tolerances (similitude relationships) which may exist between the actual component and the tested models to assure that the loads obtained from the test are a conservative representation of the load carrying capability of the actual component under postulated loading for faulted conditions.

S_y = Yield stress at temperature
S_u = ultimate stress from engineering stress-strain curve at temperature
S_{ut} = ultimate stress from true stress-strain curve at temperature
S_m = Stress intensity from ASME Section III at temperature.

TABLE 5.2.3-1 (Sheet 1)

REACTOR COOLANT PRESSURE BOUNDARY MATERIALS
CLASS A PRIMARY COMPONENTS

Reactor Vessel Components	
Shell & Head Plates (other than core region)	SA533 Gr A, B or C, Class 1 or 2 (Vacuum treated)
Shell, Flange & Nozzle Forgings	SA508 Class 2 or 3
Nozzle Safe Ends	SA182 Type F304 or F316
CRDM & ECCS Appurtenances -	SB166 or 167 and
Upper Head	SA182 Type F304
Instrumentation Guide Tube	SB166 or 167 and
Appurtenances - lower Head	SA182 Type F304, F304L or F316
Closure Studs	SA540 Class 3 Gr B23 B24
Closure Nuts	SA540 Class 3 or Gr B23 or B24
Closure Washers	SA540 Class 3 Gr B23 or B24
Core Support Pads	SB166 with Carbon less than 0.10%
Monitor Tubes & Vent Pipe	SA312 or 376 Type 304 or 316 or SB167
Vessel Supports, Seal Ledge	SA516 Gr 70 Quenched & Tempered or
& Heat Lifting Lugs	SA533 Gr A, B, or C, Class 1 or 2
	(Vessel Supports may be of weld metal buildup of equivalent strength)
Cladding	Stainless steel weld Metal Analysis A-7 and Ni-Cr-Fe Weld Metal F-Number 43
Steam Generator Components (Unit 1)	
Pressure Plates	SA533 Gr A, B, C, Class 1 or 2
Pressure Forgings	SA508 Class 2
Primary Nozzle Safe Ends	SA336 Class F316LN
Secondary Nozzle Safe Ends	SA508 Class 1a and SA508 Class 3
Channel Heads and Secondary Heads	SA508 Class 3
Tubes	SB163 UNS N06690/Code Case N20-3 Ni-Cr-Fe, Annealed
Tubesheets	SA508 Class 3
Tubesheet Cladding	Nickel Alloy 690/ Ni-Cr-Fe Weld Metal F-Number 43
Primary Head and Nozzle Cladding	Stainless Steel Weld Metal A-Number 8
Cladding	Stainless Steel Weld Metal Analysis A-7 and Ni-Cr-Fe, Weld Metal Number 43
Closure Bolting	SA540 Bolt SA193 GR B7 Studs SA194 Grade B7 Nuts

TABLE 5.2.3-1 (Sheet 2)

REACTOR COOLANT PRESSURE BOUNDARY MATERIALS
CLASS A PRIMARY COMPONENTS

Steam Generator Components (Unit 2)	
Pressure Plates	SA533 Gr A, B, C, Class 1 or 2
Pressure Forgings	SA508 Class 2 or 3
Primary Nozzle Safe Ends	SA336 F316LN
Secondary Nozzle Safe Ends	SA508 Class 1a and SA508 Class 3
Channel Heads & Secondary Heads	SA508 Class 3
Tubes	SB163 UNS N06690 / Code Case N20-3, Ni-Cr-Fe, Annealed
Tubesheets	SA508 Class 3
Tubesheet Cladding	I-690 Ni-Cr-Fe, UNS N06052, UNSW86152
Primary Head & Nozzle Cladding	Stainless Steel Weld Metal
Cladding	I-690 Ni-Cr-Fe
Closure Bolting	SA540 SA193 Grade B7 Studs SA194 Grade 7 Nuts
Pressurizer Components	
Pressure Plates	SA533 Gr A, B or C, Class 1 or 2
Pressure Forgings	SA508 Class 2 or 3
Nozzle Safe Ends	SA182 or 376 Type 316 or 316L and Ni-Cr-Fe Weld Metal F-Number 43
Cladding	Stainless Steel Weld Metal Analysis A-7 and Ni-Cr-Fe Weld Metal F-Number 43
Closure Bolting	SA 540 Bolt, SA193 GR B7 Stud, SA194 GR7 Nut
Pressurizer Safety Valve Forgings	SA182 Type F316
Structural Weld Overlays	Alloy 690, UNS 06052 or 06054 (Ni-Cr-Fe)
Reactor Coolant Pump	
Pressure Forgings	SA182 Type 304, 316 or 348
Pressure Castings	SA351 Gr CF8, CF8A, CF8M
Tube & Pipe	SA213, SA376 or SA312 - Seamless Type 304 or 316
Pressure Plates	SA240 Type 304 or 316
Bar Material	SA479 Type 304 or 316
Closure Bolting	SA193 Gr B7 or B8 SA540 Gr B23 or B24, SA453 Gr 660
Flywheel	SA533 Gr B, Class 1
Part Length Mechanism	
Pressure Housing	SA182 or SA312 Seamless Gr 304 and Code Case 1337-3
Bar Material	SA479 Type 304
Welding Materials	SFA 5.4 and 5.9 Type 308 or 308Land Ni-Cr-Fe Weld Metal F-Number 43

TABLE 5.2.3-1 (Sheet 3)

REACTOR COOLANT PRESSURE BOUNDARY MATERIALS
CLASS A PRIMARY COMPONENTS

Reactor Coolant Piping	
Reactor Coolant pipe	Code Case 1423-1 Gr F304N or 316N, or SA 351 GR CF8A or CF8M centrifugal castings
Reactor Coolant Fittings	SA351 Gr CF8A or CF8M
Branch Nozzles	SA182 Gr F304 or 316 or Code Case 1423-1 Gr F304N or 316N
Surge Line	SA376 Type 304 or 316 or Code Case 1423-1 Gr F304N or 316N
Auxiliary Piping 1/2" through 12" and wall schedules 40S through 80S (ahead of second isolation valve)	ANSI B36.19
All other Auxiliary piping (ahead of second isolation valve)	ANSI B36.10
Socket weld fittings	ANSI B16.11
Piping Flanges	ANSI B16.5
Auxiliary Piping Valves (Class I)	SA182 Type 304 or 316 or SA351 Gr CF8, CF8A or CF8M
Welding Materials	SFA 5.4 and 5.9 Type 304 or 308L
Control Rod Drive Mechanism	
Pressure Housing	SA182 Gr F304 or SA351 Gr CF8
Pressure Forgings	SA182 Gr F304 or SA336 Gr F8
Bar Material	SA479 Type 304
Welding Materials	SFA 5.4 and 5.9 Type 308 or 308L

TABLE 5.2.3-2 (Sheet 1)

REACTOR COOLANT PRESSURE BOUNDARY MATERIALS
AUXILIARY COMPONENTS

Valves

Motor and Manual Operated Gate and Check Valves

Bodies	SA182 Gr F316 or F304
Bonnets	SA182 Gr F316 or SA240 TP 304
Discs	SA182 Gr F316
Stems	SA564 Type 630 Cond 1100°F Heat Treatment *
Closure Bolting & Nuts	SA453 Gr 660 and SA194 Gr B6

Air Operated Valves

Bodies	SA182 Type F316 or SA351 Gr CF8 or CF8M
Bonnets	SA182 Type F316 or SA351 Gr CF8 or CF8M
Discs	SA182 Type F316 or SA564 Gr 630 Cond 1100°F Heat Treatment
Stems	SA182 Type F318 or SA564 Gr 630 Cond 1100°F Heat Treatment
Closure Bolting & Nuts	SA453 Gr 660 and SA194 Gr B6

Auxiliary Relief Valves

Forgings	SA182 Type F316
Disc	SA479 Type 316

Miscellaneous Valves (2 inches and less)

Bodies	SA479 Type 316 or SA351 Gr CF8
Bonnets	SA479 Type 316 or SA351 Gr CF8
Disc	SA479 Type 316
Stems	SA479 Type 410 or Type 304
Closure Bolting & Nuts	SA453 Gr 660 and SA193 Gr B6

Auxiliary Heat Exchangers

Heads	SA182 Gr F304 or SA240 Type 304 or 316
Flanges	SA182 Gr F304 or F316
Flange Necks	SA182 Gr F304 or SA240 Type 316 or SA312 Type 304 Seamless
Tubes	SA213 TP304
Tube Sheets	SA240 Type 304 or 316 or SA182 Gr F304 or SA515 Gr 70 with stainless steel weld Metal Analysis A-7 cladding
Shells	SA351 Gr CF8
Pipe	SA312 Type 304 Seamless

* 1,2-FCV-68-332 and 1,2-FCV-68-333 stem material is A638 GR 660 Type 2

TABLE 5.2.3-2 (Sheet 2)

REACTOR COOLANT PRESSURE BOUNDARY MATERIALS
AUXILIARY COMPONENTS

Auxiliary Pressure Vessels
Tanks, filters, etc.

Shells & Heads	SA240 Type 304 or SA264 Type 304 Clad to SA516 Gr 70 or SA516 G70 with Stainless Steel Weld Metal Analysis A-7 Cladding
Flanges & Nozzles	SA182 Gr F304 and SA105 or SA350 Gr LF2 with Stainless Steel Weld Metal Analysis A-7 Cladding
Piping	SA312 TP304 or TP316 Seamless
Pipe Fittings	SA403 WP304 Seamless
Closure Bolting & Nuts	SA193 Gr B7 or B8 and SA194 Gr 2H (filter bolting materials coated with maganese phosphate)

Auxiliary Pumps

Pump Casings Heads	SA351 Gr CF8 or CF8M, SA182 Gr F304 or F316
Flanges & Nozzles	SA182 Gr F304 or F316, SA403 Gr WP316L Seamless
Piping	SA312 TP304 or TP316 Seamless
Stuffing or Packing Box Cover	SA351 Gr CF8 or CF8M, SA240 TP304 or TP316
Pipe Fittings	SA403 Gr WP316L Seamless
Closure Bolting & Nuts	SA193 Gr B6, B7 or B8M and SA194 Gr 2H or Gr 8M

TABLE 5.2.3-3

REACTOR COOLANT WATER CHEMISTRY SPECIFICATION

Solution pH	Determined by the concentration of boric acid and alkali present. Expected values range between 4.2 (high boric acid concentration) to 10.5 (low boric acid concentration) at 25°C; values will be 5.0 or greater at normal operating temperatures.
Oxygen, ppm, maximum	Oxygen concentration of the reactor coolant is maintained below 0.1 ppm steady state or 1.0 ppm transient for plant operation above 250°F. Hydrazine may be used to chemically scavenge oxygen during heatup.
Chloride, ppm, maximum	0.15 steady state, 1.5 transient
Fluoride, ppm, maximum	0.15 steady state, 1.5 transient
Hydrogen, cc(STP)/kg H_2O	
Prior to exceeding one percent reactor power	≥15
Normal operation	25 - 50
Total Suspended Solids, ppm, maximum	0.1
pH Control Agent (Li^7OH), ppm Li^7	Variable depending on Boron concentration and reactor mode.
Boric Acid, ppm as B	Variable from 0 to approximately 2500
Zinc, ppb (Normal power operation)	2 - 8 ppb

TABLE 5.2-4

LOADING CONDITIONS AND STRESS LIMITS: PRESSURE PIPING

	LOADING CONDITIONS		STRESS LIMITS
1.	Normal Condition	(a)	$P \leq S$
2.	Upset Condition	(a)	$P \leq 1.2S$
3.	Faulted Condition		$P \leq 1.2\ (2.0)\ S$

where:

P = piping stress calculated per USAS B31.1 1967 Code for Power Piping.

S = allowable stress from USAS B31.1 Code 1967 and USAS B31.7 Code 1969 for Power Piping.

TABLE 5.2.4-1

MECHANICAL PROPERTY DATA FOR THE CLOSURE HEAD BOLTING MATERIAL OF THE SEQUOYAH UNIT NO. 1 & 2 REACTOR VESSELS

STUDS

Heat	Grade		Bar[1]	0.2% Yield Str. KSI	UTS KSI	Elong %	RA %	Impact Energy At 10°F Ft.-Lb	Lateral Expansion[3] Mils	Rockwell Hardness Rc
Y5485	SA540	Gr. B23	AA1	134.7	148.3	18	60	68.0, 68.0, 70.0	28	33
Y5485	SA540	Gr. B23	AB1	136.0	147.2	18	61	45.0, 53.0, 48.5	30	34
Y5485	SA540	Gr. B23	A3	140.5	155.0	18	62	68.0, 66.0, 66.0	32	33
Y5485	SA540	Gr. B23	B3	136.0	150.7	18	66	66.0, 66.0, 74.5	23	35
Y5485	SA540	Gr. B23	A11	150.7	164.0	16	62	48.5, 50.5, 48.5	18	35
Y5485	SA540	Gr. B23	B11	134.8	150.7	19	60	70.0, 68.0, 70.0	13	34
Y5485	SA540	Gr. B23	A25	142.6	149.5	18	59	66.0, 70.0, 70.0	36	33
Y5485	SA540	Gr. B23	B25	140.5	146.0	18	61	72.5, 74.5, 72.5	35	33
Y5485	SA540	Gr. B23	A28	134.8	149.5	18	58	68.0, 66.0, 70.0	25	33
Y5485	SA540	Gr. B23	B28	132.5	146.0	20	65	74.5, 72.5, 72.5	27	33
Y5485	SA540	Gr. B23	A30	133.7	147.0	19	62	70.0, 70.0, 70.0	34	33
Y5485	SA540	Gr. B23	B30	132.5	147.0	18	60	74.5, 77.0, 79.5	35	33
Y5486	SA540	Gr. B23	AA2	136.0	151.6	19	60	64.0, 60.0, 63.5	24	33
Y5486	SA540	Gr. B23	AB2	132.5	147.2	20	60	70.0, 60.0, 61.5	20	33
Y5486	SA540	Gr. B23	A4	134.5	149.5	19	60	61.5, 63.5, 61.5	28	35
Y5486	SA540	Gr. B23	B4	132.5	146.0	20	63	70.0, 72.5, 72.5	38	33
Y5486	SA540	Gr. B23	A6	132.8	146.0	18	60	68.0, 65.0, 61.5	38	34
Y5486	SA540	Gr. B23	B6	133.7	148.3	18	62	68.0, 70.0, 61.5	38	35
Y5486	SA540	Gr. B23	A7	132.5	148.3	18	63	68.0, 68.0, 68.0	31	33.5
Y5486	SA540	Gr. B23	B7	131.4	146.0	19	60	70.0, 70.0, 70.0	36	34
Y5486	SA540	Gr. B23	A8	134.8	151.6	19	62	64.0, 48.5, 61.5	30	34
Y5486	SA540	Gr. B23	B8	133.7	148.3	20	60	58.0, 50.5, 48.5	15	34
Y5486	SA540	Gr. B23	A15	131.4	146.0	20	60	70.0, 70.0, 68.0	35	34
Y5486	SA540	Gr. B23	B15	136.0	151.6	17	62	58.0, 60.0, 58.0	30	35
Y6866[2]	SA540	Gr. B23	T	131.4	146.0	18	58	37.0, 37.0, 35.5	24	32[4]
Y6866	SA540	Gr. B23	P	130.3	145.0	19	60	50.5, 45.5, 50.5	23	32[4]
			TUBE[1]			NUTS				
Y5448	SA540	Gr. B23	T1	115.7	134.8	20	63	87.0, 84.0, 77.0	35	28
Y5448	SA540	Gr. B23	P1	121.3	138.2	22	63	74.5, 77.0, 72.5	33	29
Y5448	SA540	Gr. B23	T2	113.5	128.1	22	65	87.0, 84.0, 72.5	44	27
Y5448	SA540	Gr. B23	P2	120.2	140.5	21	60	72.5, 68.0, 72.5	32	29
						WASHERS				
Y5448	SA540	Gr. B23	A1	131.4	150.7	16	48	53.0, 53.0, 55.0	31	34
Y5448	SA540	Gr. B23	B1	132.5	149.5	18	50	58.0, 55.0, 60.0	20	34
Y5448	SA540	Gr. B23	A2	136.0	148.3	18	52	50.5, 50.5, 50.5	28	33
Y5448	SA540	Gr. B23	B2	133.7	149.5	17	52	61.5, 55.0, 53.0	24	33

Notes
(1) A-B and T-P designations refer to opposite ends of a bar or tube.
(2) Studs machined from heat Y6866 will only be used on Unit No. 2.
(3) Lateral expansion results were obtained for information only, value reported represents measurement made on only one charpy specimen from each set of 3 charpy tests.
(4) Hardness measurement was not performed, value reported was converted per ASME specification SA-370, Paragraph 18 and Table 111 of Paragraph 19.

TABLE 5.2.4-2

Pre-irradiation Charpy V-Notch Impact Data for the Sequoyah Unit No. 1
Lower Shell Forging 04, HT 980919/281587 (Axial Direction)

Test Temp. (°F)	Energy (ft-lb)	Shear (%)	Lateral Expansion (mils)
-40	18	14	7.5
-40	10	9	1.5
10	25	25	23
10	16	29	15
10	19	17	20
65	33	56	35
65	32	48	25.5
65	41	59	36
140	66	100	59
140	52	100	47
140	66	100	57
210	72	100	61
210	75	100	63
210	70	100	57
300	54	100	54
300	57	100	53
300	64	100	61
300	51	100	54
300	61	100	61
300	66	100	62
350	70	100	62
350	60	100	59
350	74	100	62
350	82	100	69

TABLE 5.2.4-3

Pre-irradiation Charpy V-Notch Impact Data for the Sequoyah Unit No. 1
Intermediate Shell Forging 05, HT 980807/281439 (Axial Direction)

Test Temp. (°F)	Energy (ft-lb)	Shear (%)	Lateral Expansion (mils)
-40	17	14	7.5
-40	27	23	15
10	54.5	42	36
10	30	27	17
10	22.5	25	14.5
55	44	53	36
55	33.5	36	26
55	37.5	36	30
100	50	77	42
100	75	100	62
140	84	100	66
140	73	100	60
140	80	100	67
210	72.5	100	60
210	80	100	62
210	70	100	59
300	72	100	58
300	80	100	69
300	64	100	58

TABLE 5.2.4-4

PREIRRADIATION CHARPY V NOTCH IMPACT PROPERTIES
FOR THE SEQUOYAH UNIT NO. 2 REACTOR PRESSURE
VESSEL CORE REGION WELDMENT

Test Temp. (°F)	Energy (ft-lb)	Shear (%)	Lateral Expansion (mils)
-100	23	10	13
-100	16	5	10
-40	47	25	38
-40	62	35	49
-40	68	35	51
0	62	40	45
0	70	45	54
0	59	45	48
55	96	85	76
55	85	50	66
55	85	50	65
110	116	85	90
110	119	85	85
110	89	80	72
160	115	100	86
160	104	100	80
210	76	100	70
210	117	100	85
210	112	100	78

TABLE 5.2.4-5

PREIRRADIATION CHARPY V NOTCH IMPACT PROPERTIES
FOR THE SEQUOYAH UNIT NO. 2 REACTOR PRESSURE
VESSEL CORE HEAT AFFECTED ZONE WELDMENT (FORGING 05 SIDE)

Test Temp. (°F)	Energy (ft-lb)	Shear (%)	Lateral Expansion (mils)
-100	35	15	16
-100	35	15	15
-100	9	5	2
-40	75	55	36
-40	58	45	36
-40	27	40	17
0	59	45	34
0	28	40	18
0	46	35	30
45	130	100	70
45	113	100	59
45	72	55	43
110	126	100	80
110	121	100	74
110	99	100	55
160	118	100	75
160	129	100	70
160	123	100	72
210	113	100	73
210	119	100	79
210	105	95	66

TABLE 5.2.4-6

PREIRRADIATION CHARPY V NOTCH IMPACT PROPERTIES
FOR THE SEQUOYAH UNIT NO. 2 REACTOR PRESSURE
VESSEL INTERMEDIATE SHELL FORGING 05 HT
(AXIAL ORIENTATION)

Test Temp. (°F)	Energy (ft-lb)	Shear (%)	Lateral Expansion (mils)
-40	11	13	9
-40	43	39	31.5
-40	16.5	23	14.5
0	46.5	42	38.5
0	36	30	31
35	41.5	43	37
35	46	45	40
35	37	43	33
75	65	63	52
75	56	53	51
75	52	48	49
140	82.5	100	67
140	80	100	69
140	87	100	70.5
210	90.5	100	75
210	86	100	66
210	90	100	75.5
300	91	100	76
300	95	100	80
300	94	100	72

TABLE 5.2.4-7

PREIRRADIATION CHARPY V NOTCH IMPACT PROPERTIES
FOR THE SEQUOYAH UNIT NO. 2 REACTOR PRESSURE
VESSEL LOWER SHELL FORGING 04 INGOT NO. 4994
(AXIAL ORIENTATION)

Test Temp. (°F)	Energy (ft-lb)	Shear (%)	Lateral Expansion (mils)
-100	5	7	2
-100	11	9	5
-100	9.5	9	5
40	30	25	20
40	27	25	18
40	28	23	20
20	49	45	37
20	42	43	35
20	52	45	41
75	71	66	56
75	70	63	55
75	67	66	53
140	86	100	72
140	97	100	74
140	105	100	80
210	97	100	76
210	93	100	73
210	102	100	79
300	103	100	79
300	96	100	75
300	100	100	78

TABLE 5.2.4-8 (Sheet 1)

SEQUOYAH-UNIT 1 REACTOR VESSEL TOUGHNESS DATA

COMPONENT	HEAT NO.	MATERIAL GRADE	Cu (%)	Ni (%)	NDT (°F)	MINIMUM 50 ft-lb/35 mil temp. TEMP.(°F)		RT_{NDT} (°F)	AVERAGE UPPER SHELF ENERGY (ft-lb)	
						PMWD[1]	NMWD[2]		PMWD[1]	NMWD[2]
Clos Hd. Dome	52841-1	A533B,C1.1	-	-	-40	+14	+34	-26	104[a]	-
Clos Hd. Ring	(D75600)	A508,C1.2	-	-	+ 5	+36	+56*	+5	125[a]	-
Hd Flange	4842	A508,C1.2	-	-	-40	-24	-4*	-40	131[a]	-
Vessel Flange	4866	A508,C1.2	-	-	-49	-47	-27	-49	158[a]	-
Inlet Nozzle	4846	A508,C1.2	-	-	-58	+25	+45	-15	94.5[a]	-
Inlet Nozzle	4949	A508,C1.2	-	-	-40	+39	+59*	-1	93[a]	-
Inlet Nozzle	4863	A508,C1.2	-	-	-22	+16	+36*	-22	118[a]	-
Inlet Nozzle	4865	A508,C1.2	-	-	-67	+ 9	+29*	-31	94[a]	-
Outlet Nozzle	4845	A508,C1.2	-	-	-49	+21	+41*	-19	94[a]	-
Outlet Nozzle	4850	A508,C1.2	-	-	-58	+30	+50*	-10	79.5[a]	-
Outlet Nozzle	4862	A508,C1.2	-	-	-58	+16	+36*	-24	103[a]	-
Outlet Nozzle	4864	A508,C1.2	-	-	-49	0	+20	-40	126[a]	-
Upper Shell	4841	A508,C1.2	-	-	-40	+43	+83	+23	83[a]	113[b]
Inter Shell	4829	A508,C1.2	0.15	0.86	-4	+10	+100	+40	116	73[b,c]
Lower Shell	4836	A508,C1.2	0.13	0.76	+5	+28	+133	+73	109	70[b]
Trans. Ring	4879	A508,C1.2	-	-	+5	+27	+47*	+ 5	98[a]	-
Bot. Hd. Rim	52703/2-1	A533B,C1.1	-	-	-31	+23	+43*	-17	104[a]	-
Bot. Hd. Rim	52703/2-2	A533B,C1.1	-	-	-13	+36	+56*	-4	63[a]	-
Bot. Hd. Rim	52704/2	A533B,C1.1	-	-	-49	-24	-4*	-49	114[a]	-
Bot. Hd. Rim	52703/2-2	A533B,C1.1	-	-	-31	+43	+63*	+3	86[a]	-
Bot. Hd. Rim	52704/2	A533B,C1.1	-	-	-58	-13	+4	-53	120[a]	-
Bot. Hd.	52704/11	A533B,C1.1	-	-	-58	-47	-27*	-58	139[a]	-
Weld	-	Weld	0.35	0.11	-40	-	-4	-40	-	116[b]
HAZ	-	Weld	-	-	-22	-	+41	-19	-	86[b]

[1]-Paralled to Major Working Direction

[2]-Normal to Major Working Direction

[a]-%Shear Not reported

[b]-Minimum upper shelf energies

[c]-Minimum upper shelf energy decreased to 51 at a test temperature of 300°F. This anomaly will be reevaluated when the results of Generic task A-11 are available.

* Estimate based on USAEC Regulatory Standard Review Plan, Section 5.3.2 MTEB

TABLE 5.2.4-8 (Sheet 2)

SEQUOYAH-UNIT 2 REACTOR VESSEL TOUGHNESS DATA

COMPONENT	HEAT NO.	MATERIAL GRADE	Cu (%)	Ni (%)	NDT (°F)	MINIMUM 50 ft-lb/35 mil temp. TEMP.(°F)		RT_{NDT} (°F)	AVERAGE UPPER SHELF ENERGY (ft-lb)	
						PMWD[1]	NMWD[2]		PMWD[1]	NMWD[2]
CL Hd. Dome	52899-1	A533BCL1	-	-	-13	28	48*	-12	75[a]	-
CL Hd. Ring	-	A508CL2	-	-	5	34	54*	5	125.5[a]	-
Hd Flange	4890	A508CL2	-	-	-13	<-67*	<-67	-13	141[a]	-
Vessel Flange	4832	A508CL2	-	-	-22	-47	-27	-22	155.5[a]	-
Inlet Nozzle	4868	A508CL2	-	-	-22	41	61*	1	79[a]	-
Inlet Nozzle	4872	A508CL2	-	-	-22	12	32*	-22	108[a]	-
Inlet Nozzle	4877	A508CL2	-	-	-31	1	21*	-31	113[a]	-
Inlet Nozzle	4886	A508CL2	-	-	-31	-52	-32*	28	138[a]	-
Outlet Nozzle	4867	A508CL2	-	-	-31	19	39*	-21	85[a]	-
Outlet Nozzle	4873	A508CL2	-	-	-22	21	41*	-19	76[a]	-
Outlet Nozzle	4878	A508CL2	-	-	-40	-6	14*	-40	105[a]	-
Outlet Nozzle	4887	A508CL2	-	-	-22	-11	9*	-22	143.5[a]	-
Upper Shell	4885	A508CL2	-	-	5	25	45*	5	104[a]	-
Inter Shell	4853	A508CL2	0.13	0.76	-22	19	70	10	138	93
Lower Shell	4994	A508CL2	0.14	0.76	-40	8	38	-22	140.5	100
Trans. Ring	4879	A508CL2	-	-	5	27	47*	5	98[a]	-
Bot. Hd. Rim	52835-1B	A533BCL1	-	-	-4	48	68*	8	81[a]	-
Bot. Hd. Rim	52835-1B	A533BCL1	-	-	-22	25	45*	-15	81[a]	-
Bot. Hd. Rim	52899-2	A533BCL1	-	-	-13	39	59*	-1	62[a]	-
Bot. Hd.	5297-1	A533BCL1	-	-	-31	14	34*	-26	99.5[a]	-
Weld	-	Weld	0.12	0.11	-4	-	14	-4	-	101
HAZ	-	HAZ	-	-	-13	-	17	-13	-	120

[1]-Paralled to Major Working Direction

[2]-Normal to Major Working Direction

[a]-%Shear Not reported

* Estimate based on USAEC Regulatory Standard Review Plan, Section 5.3.2 MTEB 5-2

TABLE 5.2-5

LOADING CONDITIONS AND STRESS LIMITS: EQUIPMENT SUPPORTS

Operating Condition	Loading Combination	Stress Limit
Normal	Thermal Expansion Weight Operating Pressure	Within working limits
Upset	Thermal Expansion Weight Operating Pressure Operational Basis Earthquake	Within 1.3 times working limits
Emergency	Weight Operating Pressure Design Basis Earthquake	Within 1.5 times working limits
Faulted	Operating Pressure Weight Design Basis Earthquake LOCA	Within lesser of $\frac{1.2F_Y}{F_\tau} or \frac{0.7S_U}{F_\tau} times$ working limits [(a)]
[(a)] Sequoyah FSAR Limits: Support member must be within yield stress after load redistribution		

Note that working stresses are defined by AISC, Manual of Steel Construction, 7th Edition. Also, member compressive axial stresses, for the Faulted condition, are limited to the lesser of the critical buckling stress of the member or yield.

TABLE 5.2.5-1

REACTOR VESSEL INTERNALS MATERIALS ASSOCIATED WITH EMERGENCY CORE COOLING

Forgings	SA182 Type F304
Plates	SA240 Type 304
Pipes	SA312 Type 304 Seamless or SA376 Type 304
Tubes	SA213 Type 304
Bars	SA479 Type 304 & 410
Castings	SA351 Gr CF8 or CF8A
Bolting	SA (Pending) Westinghouse PD Spec. 70041EA
Nuts	SA193 Gr B-8
Locking Devices	SA479 Type 304
Weld Buttering	Stainless Steel Weld Metal Analysis A-7

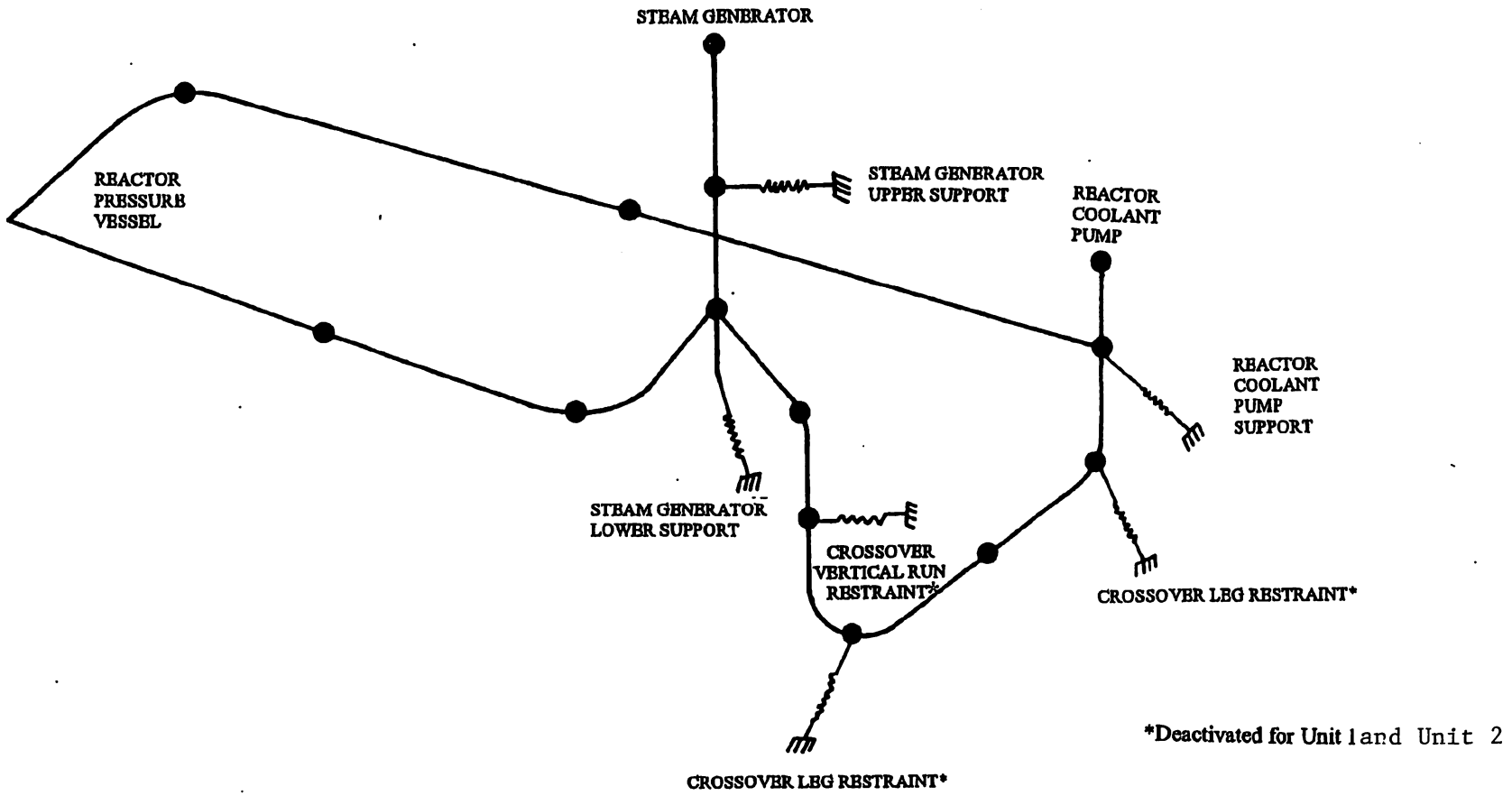

Figure 5.2.1-4 Reactor Coolant Loop/Supports System Structural Model for Dynamic Analysis

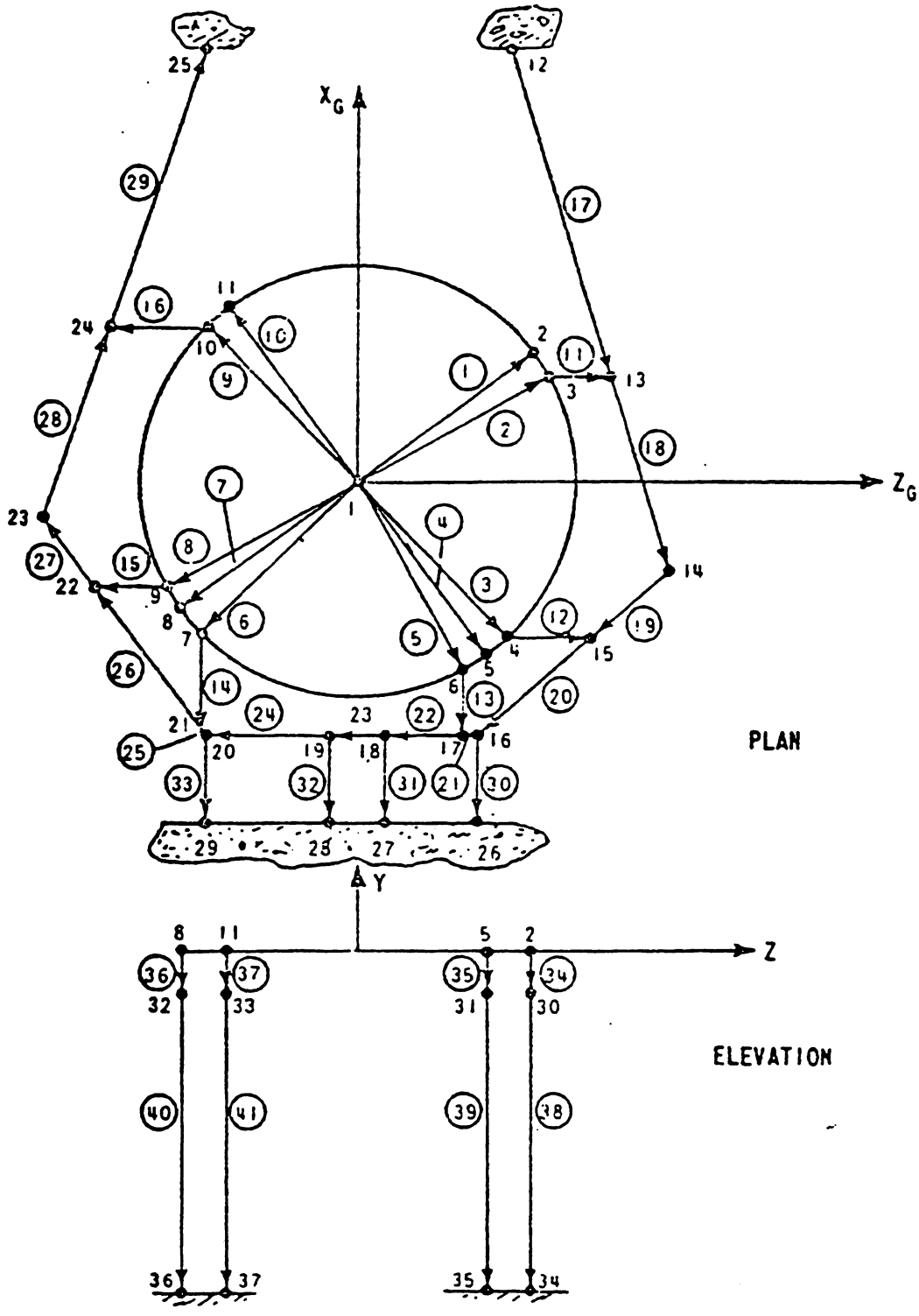

Figure 5.2.1-5 Steam Generator Lower Lateral Support Model

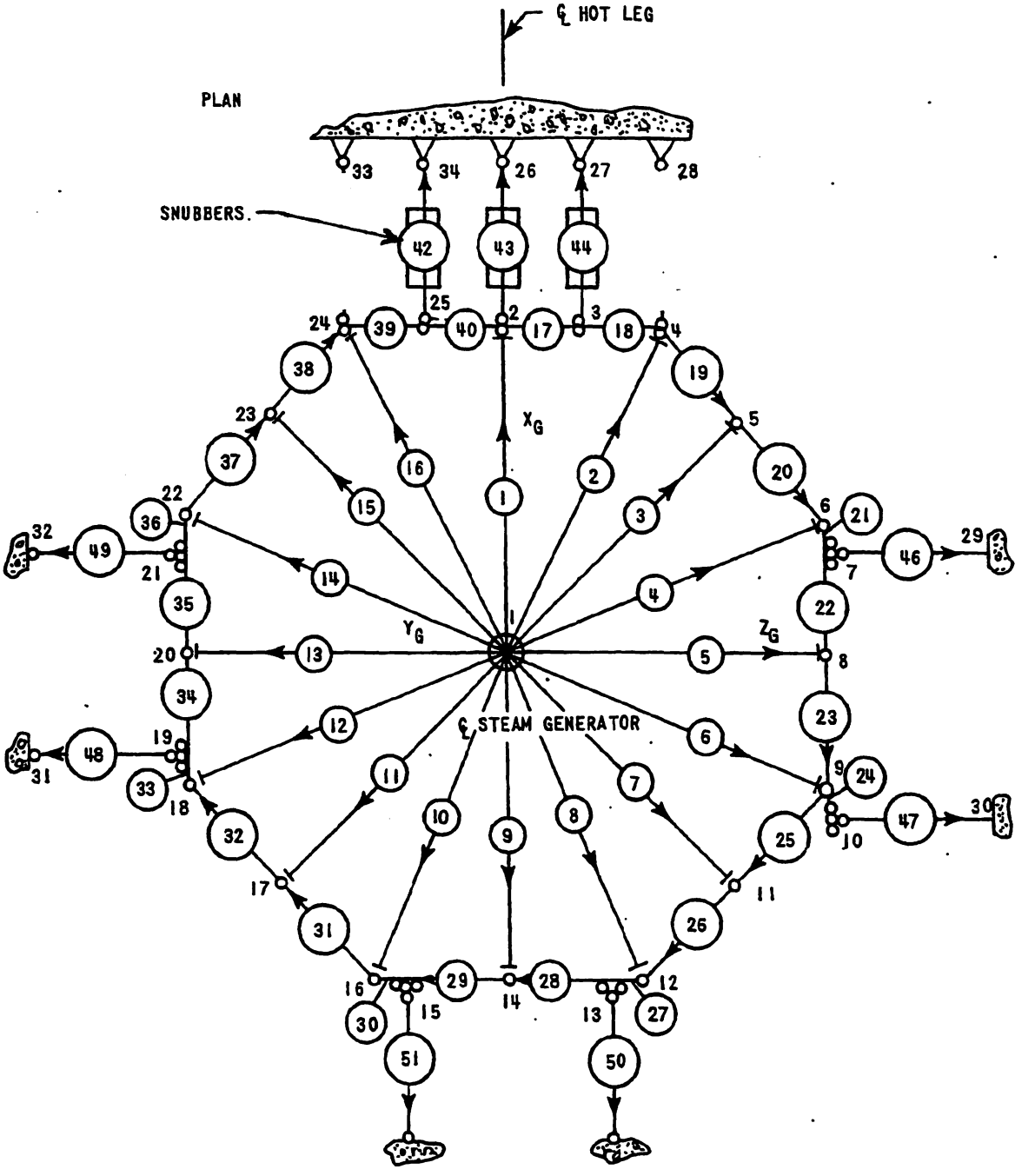

Figure 5.2.1-6 Steam Generator Upper Lateral Support Model

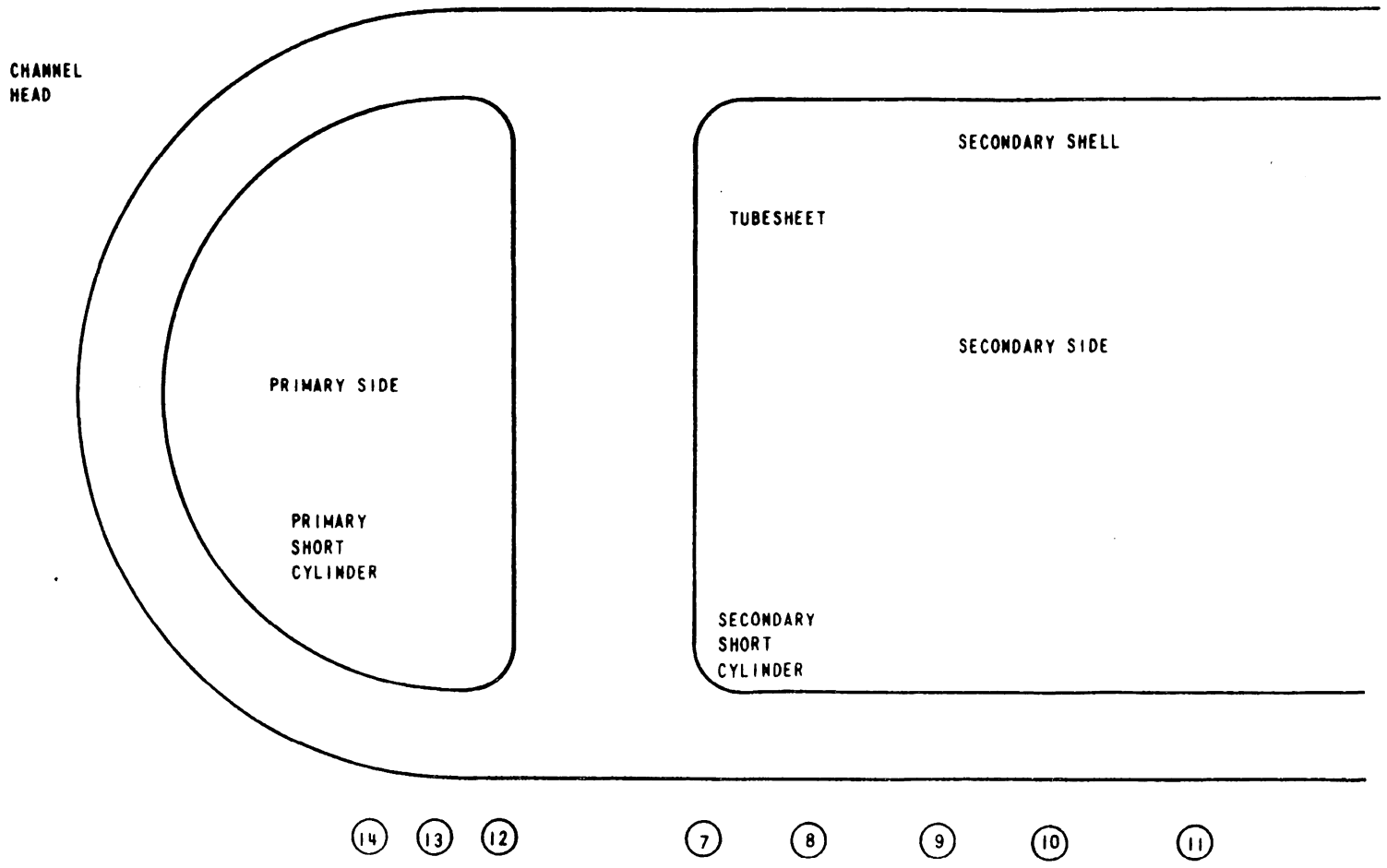

Figure 5.2.1-8 Primary-Secondary Boundary Components
Shell Locations of Stress Investigations

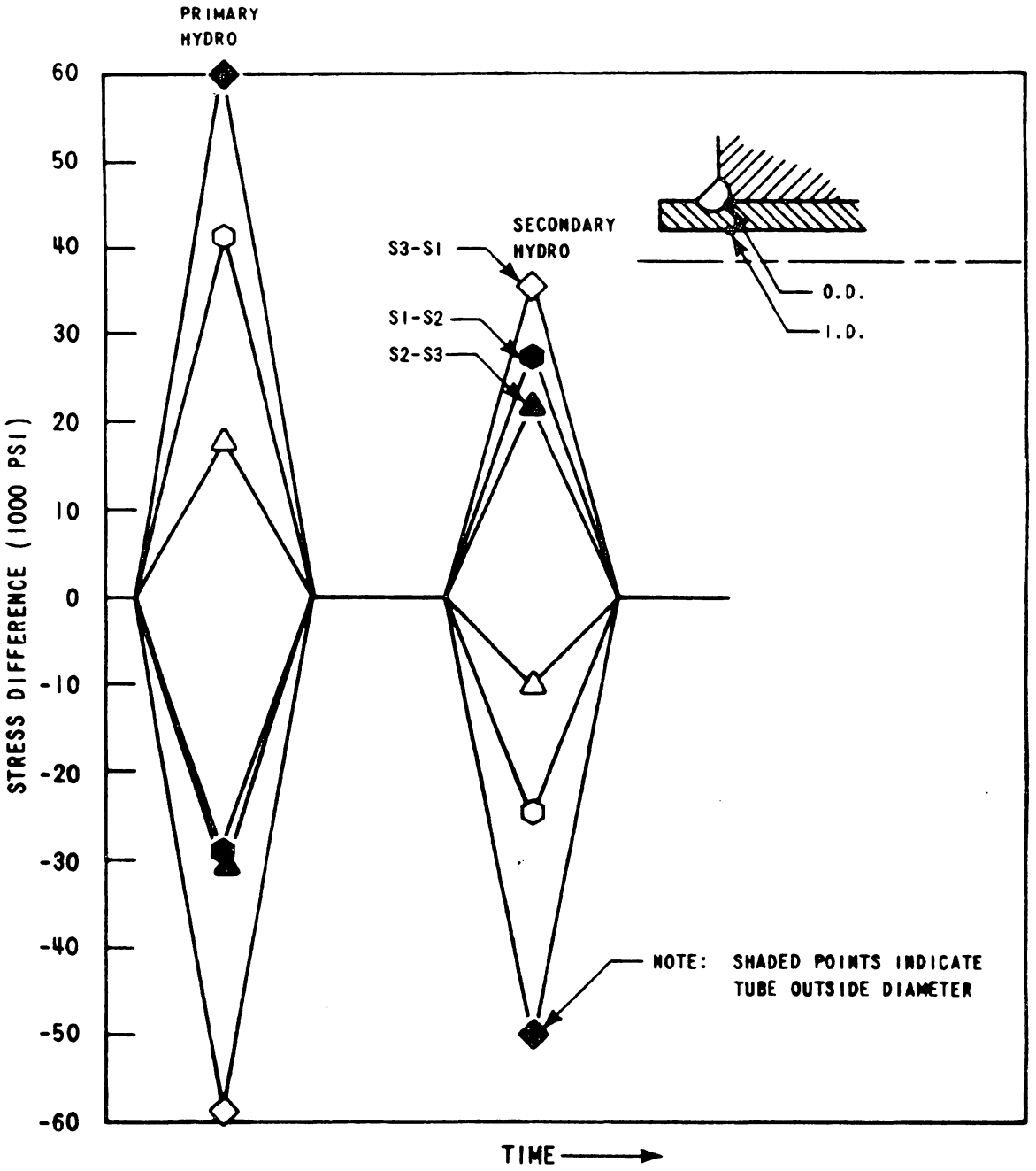

Figure 5.2.1-9 Primary and Secondary Hydrostatic Test Stress History for the Center Hole Location

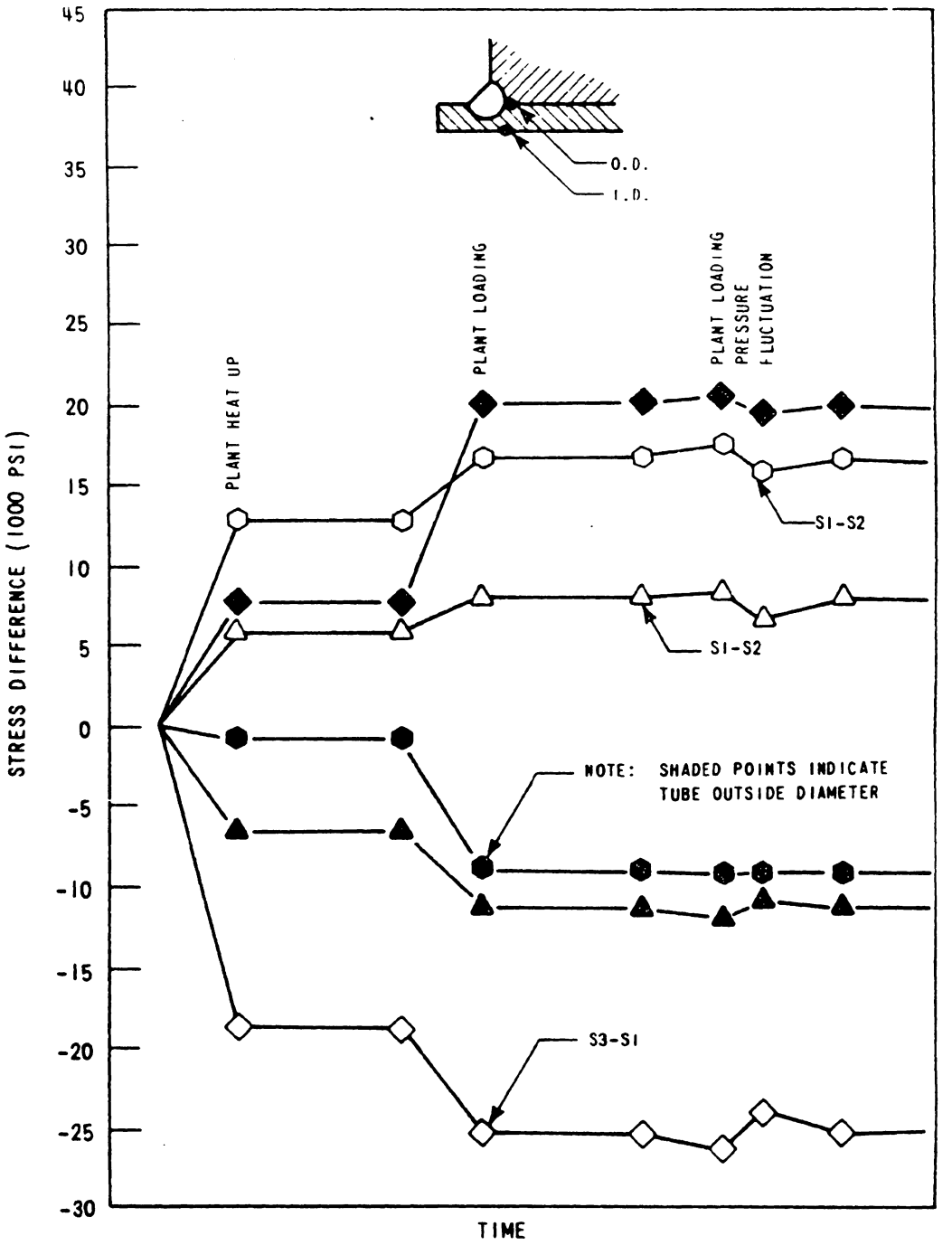

Figure 5.2.1-10 Plant Heat Up and Loading Operational Transients (with Steady-State Plateau) Stress History for the Hot Side Center Hole Location

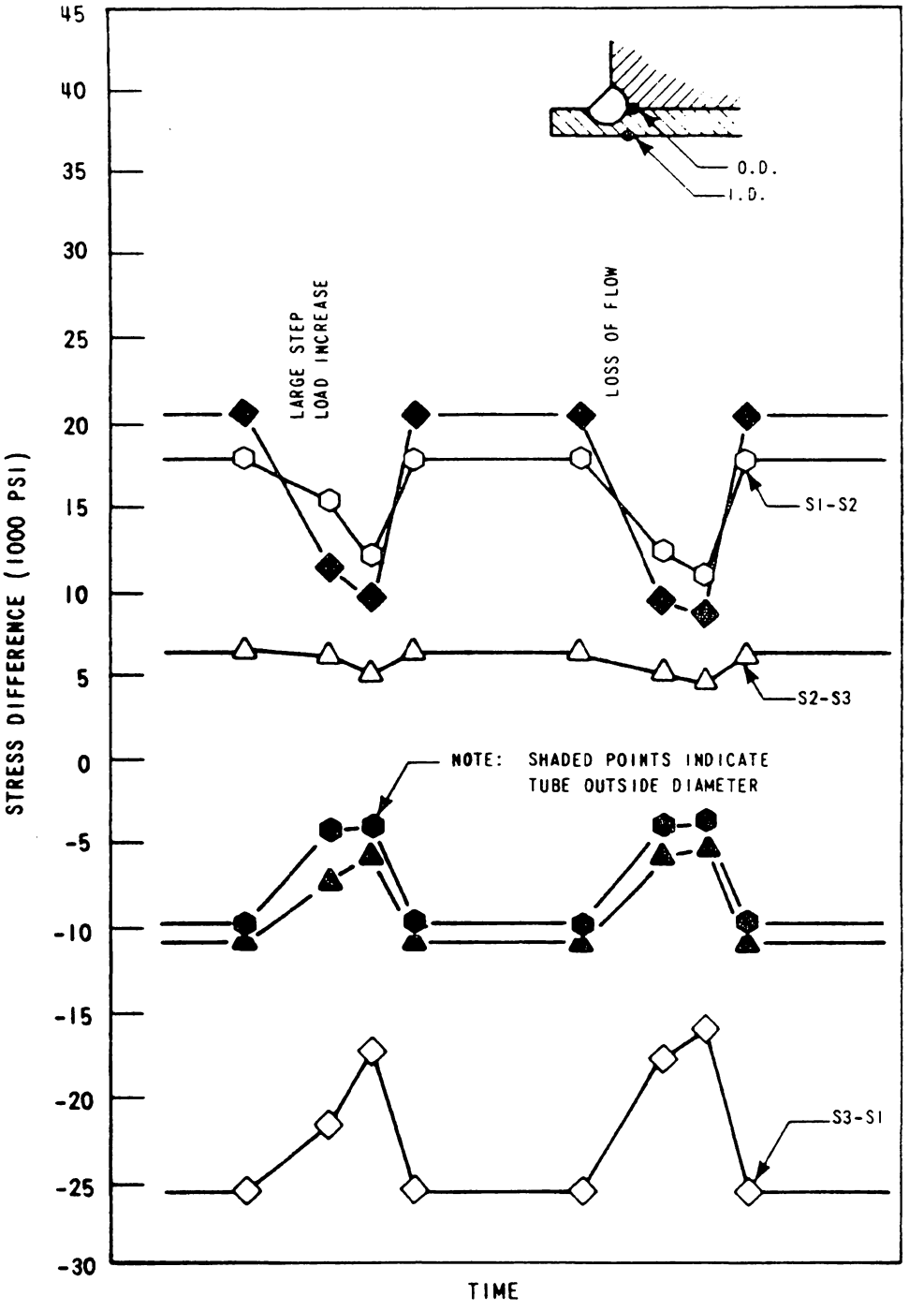

Figure 5.2.1-11 Large Step Load Decrease and Loss of Flow Stress History for the Hot Side Center Hole Location

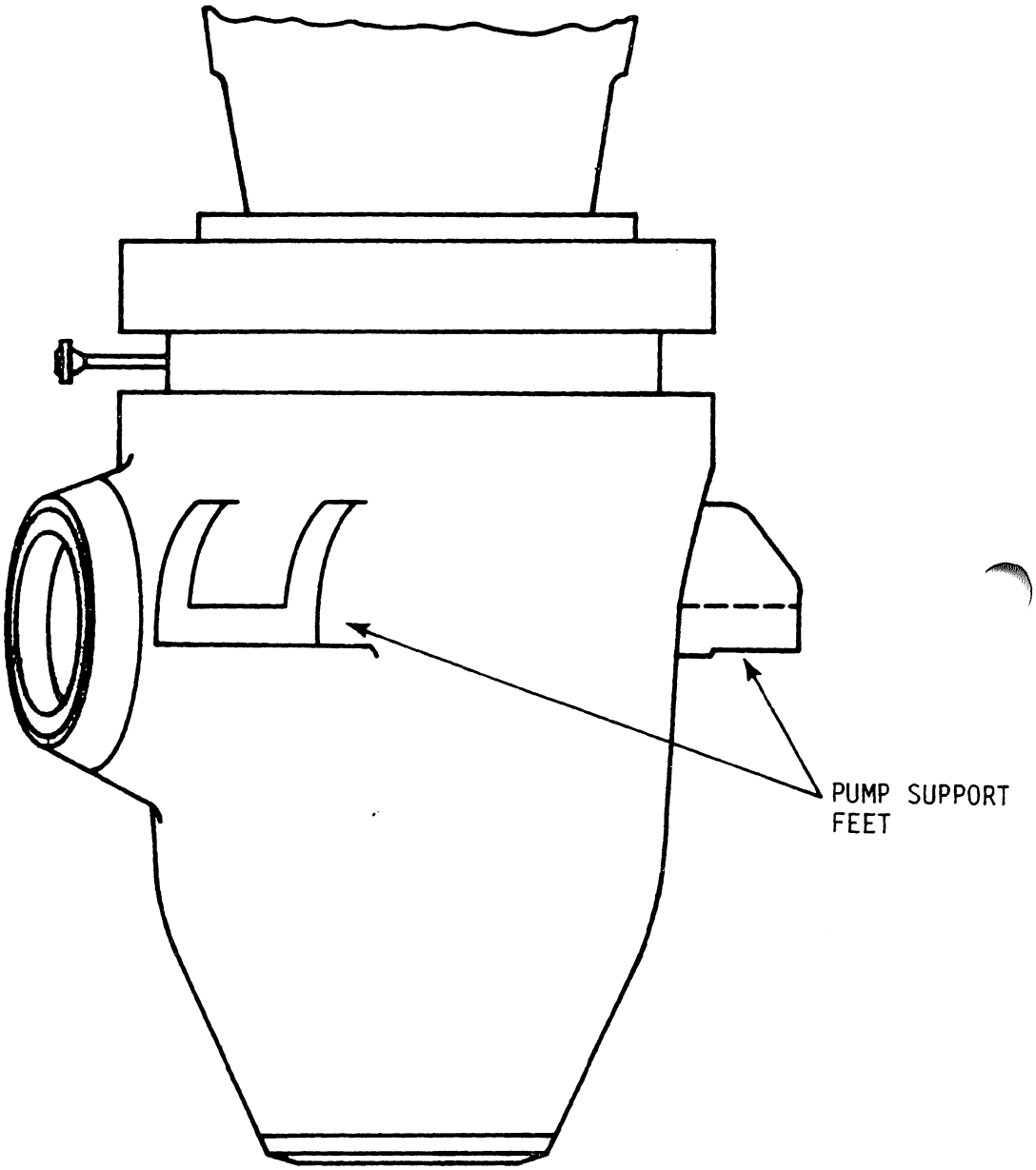

Figure 5.2.1-12 Reactor Coolant Pump Casing With Support Feet

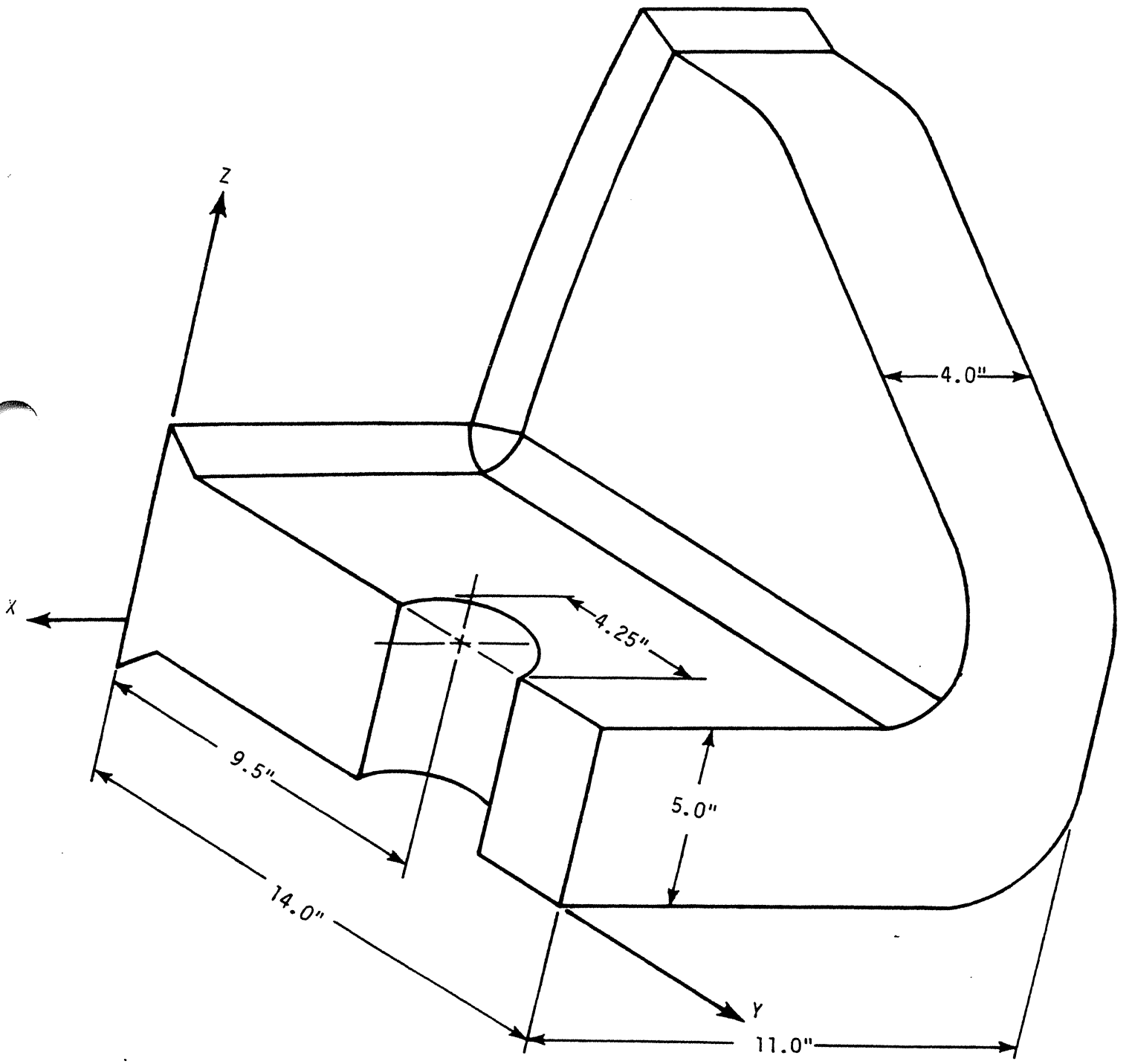

Figure 5.2.1-13 Reactor Coolant Pump Support Feet

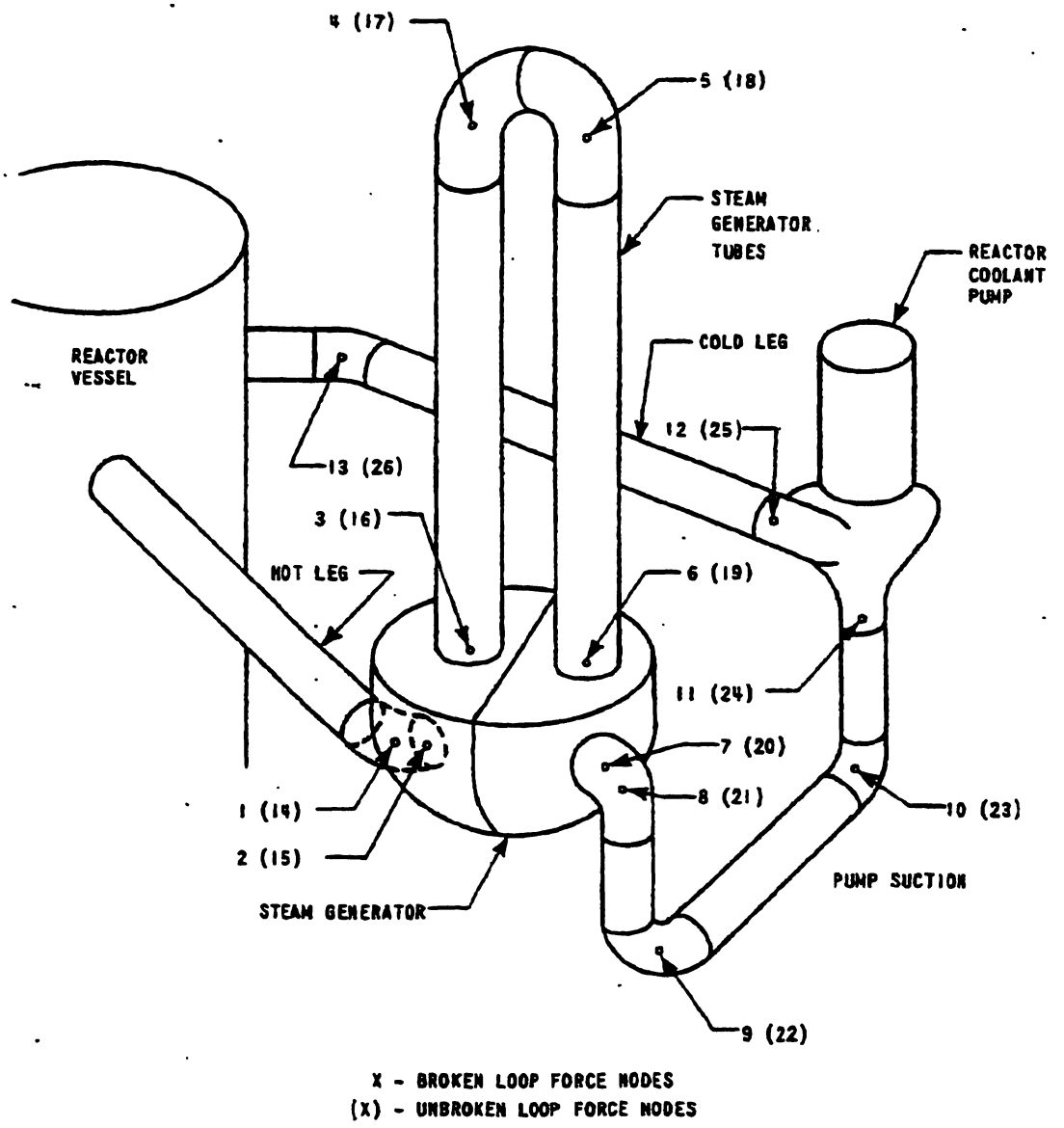

Figure 5.2.1-14
THRUST Reactor Coolant Loop Model Showing Hydraulic Force Locations

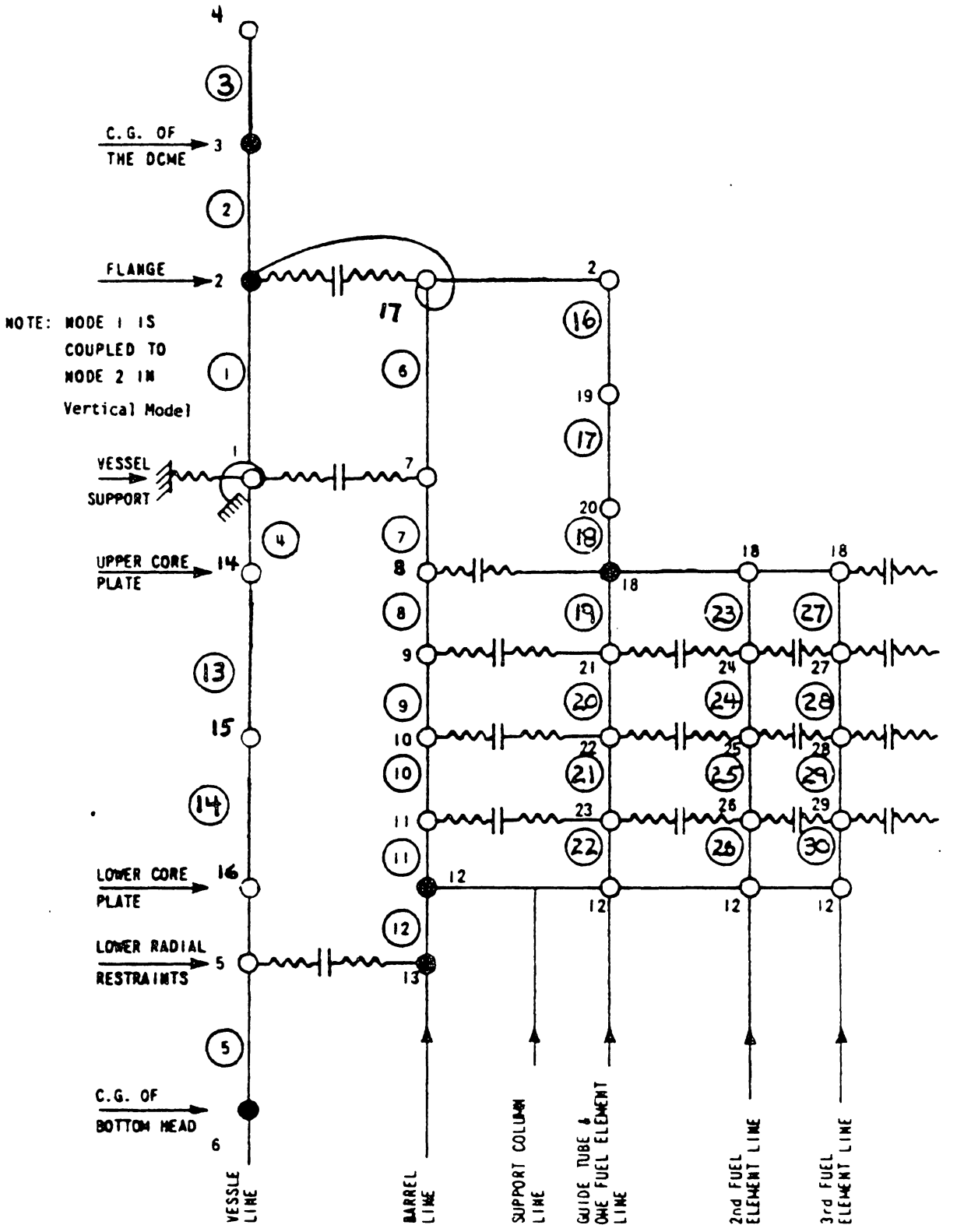

Figure 5.2.1-15 Mathematical Model For Horizontal Response

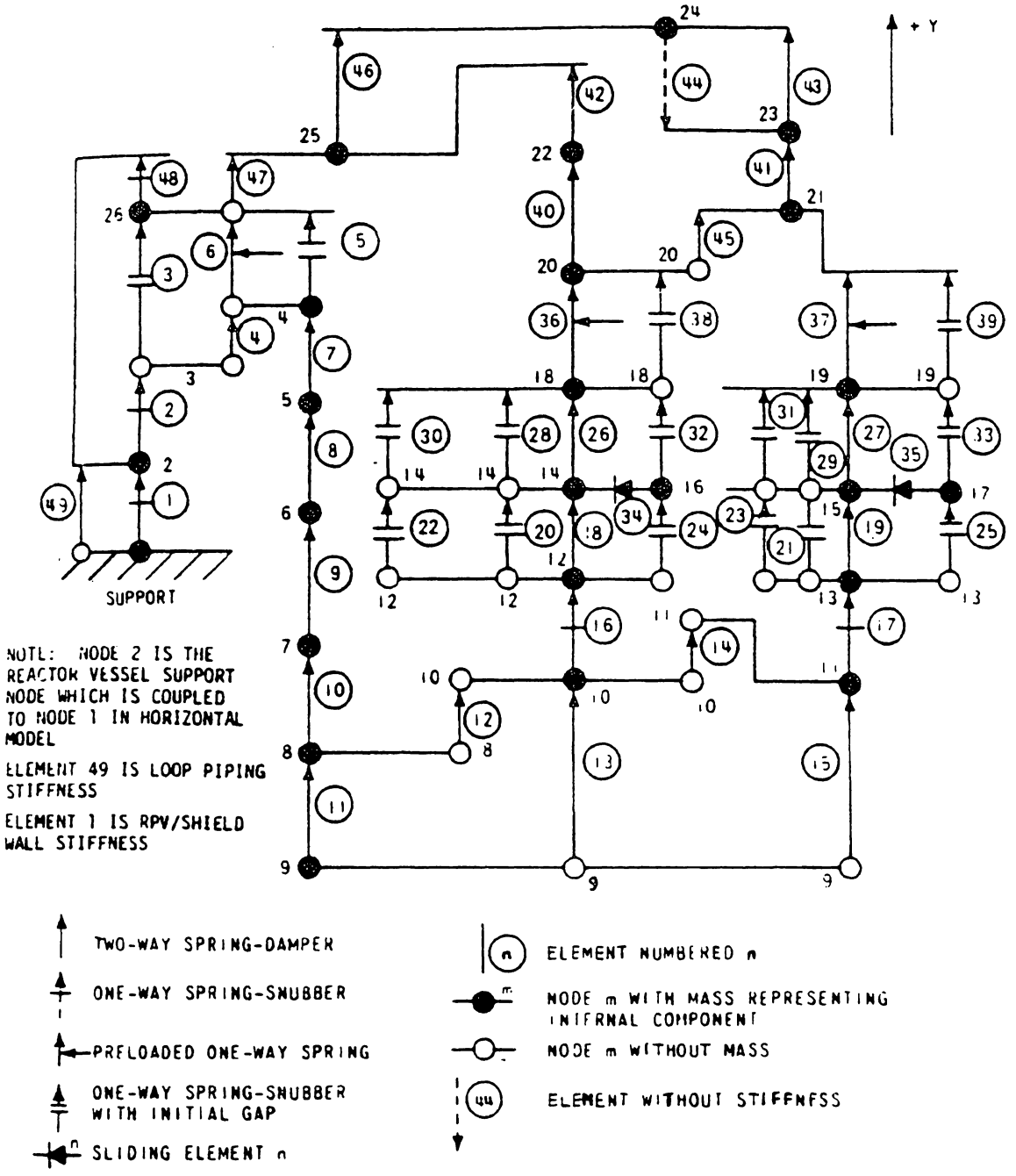

Figure 5.2.1-16 Mathematical Model For Vertical Response

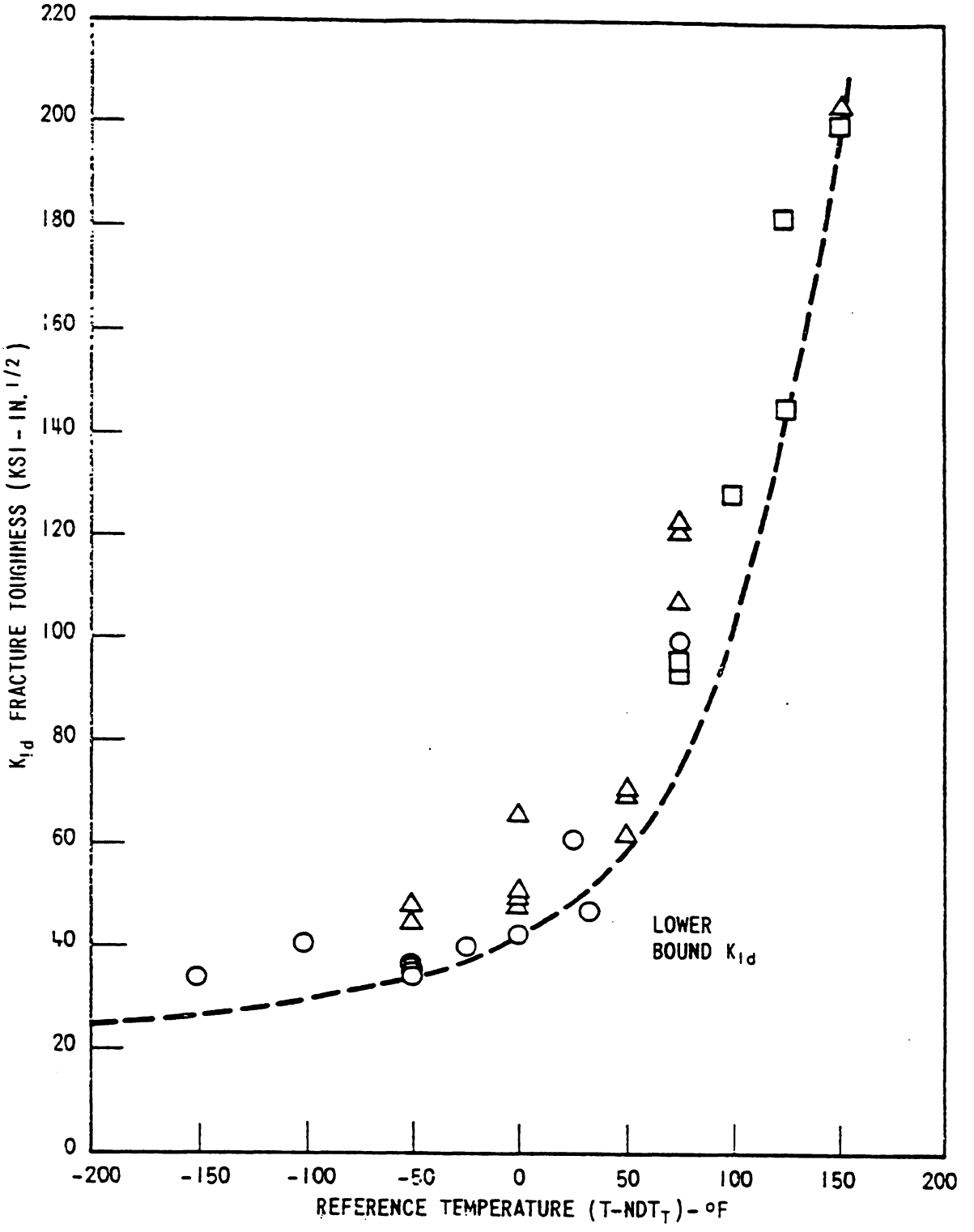

Figure 5.2.6-1 K_{Id} Lower Bound Fracture Toughness A533V (Reference WCAP 7623) GRADE B Class 1

NOTE: THIS DRAWING IS NOT TO SCALE: ITS SOLE PURPOSE IS TO ILLUSTRATE THE PROVISIONS THAT HAVE BEEN MADE WITHIN THE FLOOR AND EQUIPMENT DRAIN SYSTEM TO ASSURE SUFFICIENT POST-LOCA LOWER COMPARTMENT INVENTORY INSIDE THE CRANE WALL.

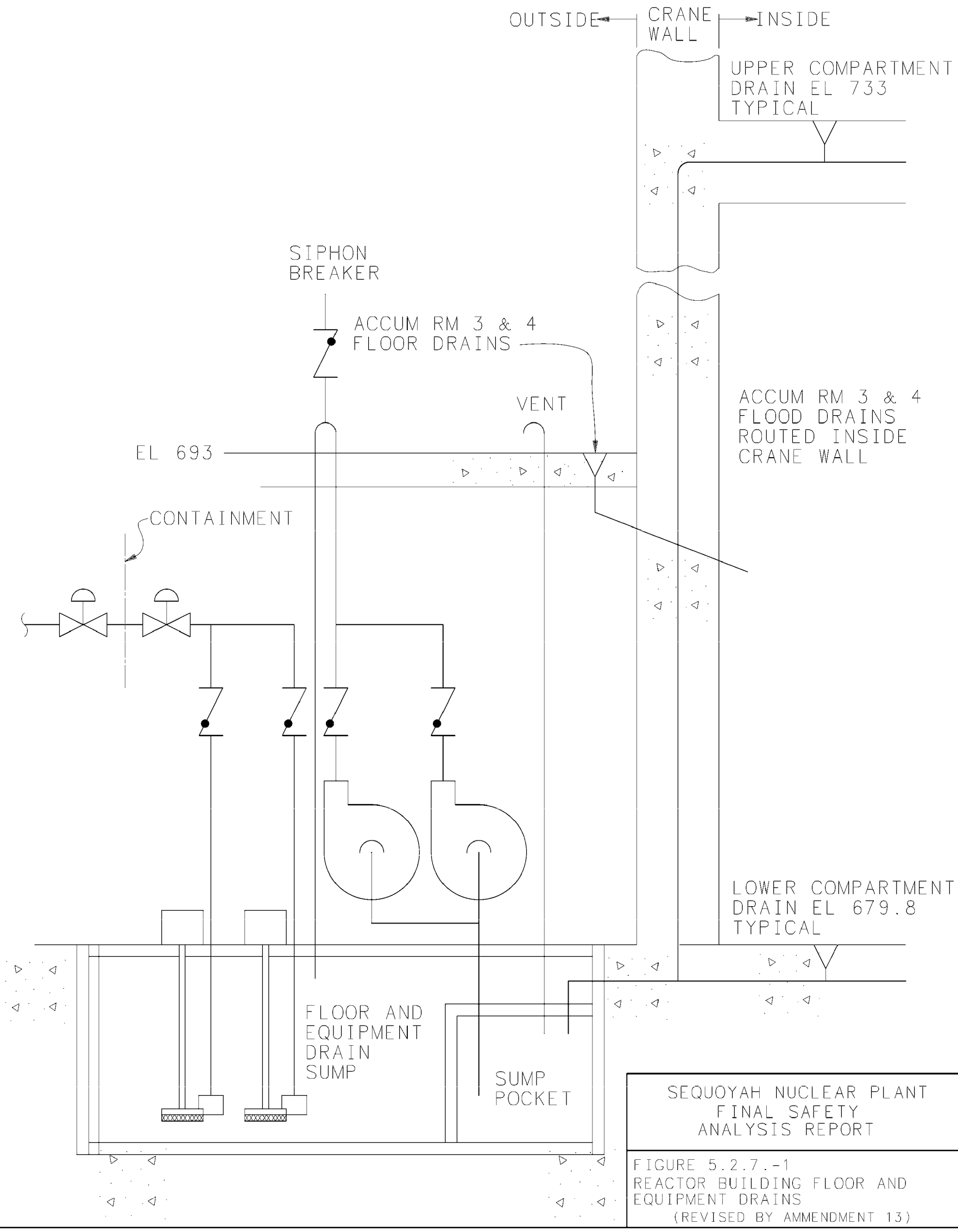

SEQUOYAH NUCLEAR PLANT
FINAL SAFETY
ANALYSIS REPORT

FIGURE 5.2.7.-1
REACTOR BUILDING FLOOR AND EQUIPMENT DRAINS
(REVISED BY AMMENDMENT 13)

5.3 THERMAL HYDRAULIC SYSTEM DESIGN

5.3.1 Analytical Methods and Data

The nuclear, thermal, and hydraulic design bases of the Reactor Coolant System (RCS) are described in Sections 4.3 and 4.4 in terms of core heat generation rates, DNBR, analytical models, peaking factors, and other relevant aspects of the reactor.

5.3.2 Operating Restrictions on Pumps

The operating procedures state that the pressure differential across the RCP number 1 seal must be at least 220 psid before operating the reactor coolant pump. A minimum flow of 0.2 gpm (except for short periods of time after seal maintenance, provided some flow can be verified) must be present through the number 1 seal and a minimum backpressure of 15 psi on the number 1 seal.

The Advanced W17 HTP fuel design includes a hold down spring system to maintain the fuel assembly in a seated condition during all Condition I and II events, except for the 120% pump overspeed event. In calculating assembly lift forces it is assumed that no more than three reactor coolant pumps will be in operation at RCS cold leg temperatures less than 300º F plus instrument error. This assumption will be applied to full cores of Advanced W17 HTP assemblies after the fuel transition and also to mixed cores of Advanced W17 HTP and Mark-BW assemblies during the transition.

5.3.3 (BWR)

5.3.4 Temperature-Power Operating Map

A typical RCS Temperature-Percent Power map with nominal values is shown in Figure 5.3.4-1. Note that the exact values are cycle dependent. Refer to the current cycle reload analysis.

The effects of reduced core flow due to inoperative pumps or natural circulation are discussed in Sections 4.4.3.3, 5.5, and 15.3.6.

5.3.5 Load Following Characteristics

The reactor coolant pumps utilize constant speed drives, and the reactor power is controlled to maintain average coolant temperature at a value which is a linear function of load.

5.3.6 Transient Effects

Transient effects are evaluated in the following sections: Complete Loss of Forced Reactor Coolant Flow (15.3.4), Partial Loss of Forced Reactor Coolant Flow (15.2.5), Startup of an Inactive Loop (15.2.6), Loss of Load (15.2.7), Loss of Normal Feedwater (15.2.8), Loss of Offsite Power (15.2.9), Accidental Depressurization of the Reactor Coolant System (15.2.12).

5.3.7 Thermal and Hydraulic Characteristics Summary Table

The thermal and hydraulic characteristics are given in Tables 4.4.2-1and 4.4.2-2.

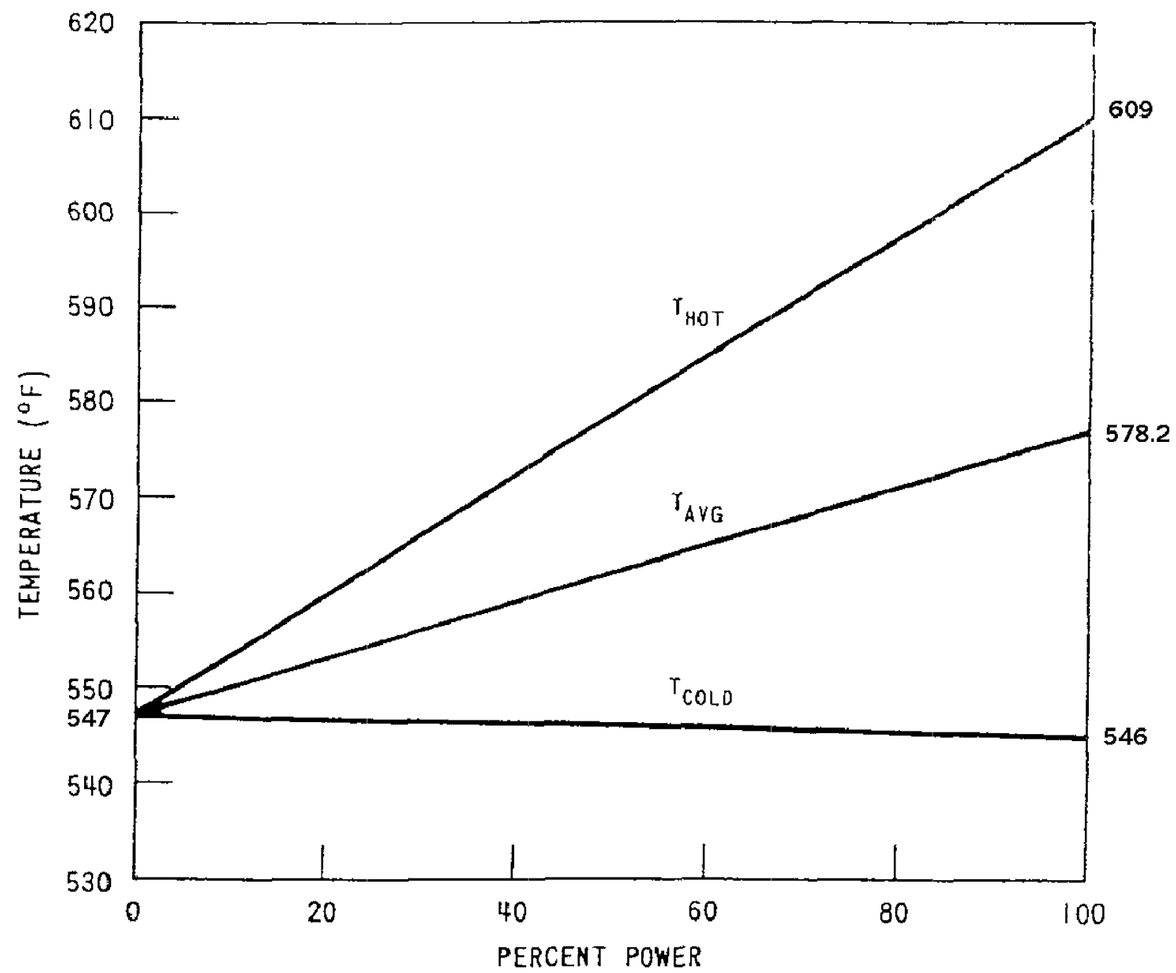

NOTE:
NUMERICAL VALUES ARE TYPICAL NOMINAL VALUES REFER TO CURRENT CYCLE RELOAD ANALYSIS FOR EXACT VALUES

SEQUOYAH NUCLEAR PLANT
FINAL SAFETY
ANALYSIS REPORT

FIGURE 5.3.4-1
REACTOR COOLANT SYSTEM TEMP VS PERCENT POWER MAP
(REVISED BY AMENDMENT 13)

5.4 REACTOR VESSEL AND APPURTENANCES

Section 5.4 has been divided into four principal subsections via., design bases, description, evaluation and test and inspections for the reactor vessel and its appurtenances consistent with the requirements of the introductory paragraph of 5.4 of the Standard Format and Content Guide Revision 1. The following specific information required by the guide is cross referenced below.

	Guide Reference	FSAR Section
5.4.1	Protection of Closure Studs	5.4.2.2
5.4.2	Special Processes for Fabrication and Inspection	5.4.2.1, 5.4.4
5.4.3	Features for Improved Reliability	5.4.1, 5.4.2
5.4.4	Quality Assurance Surveillance	5.4.2, 5.4.4
5.4.5	Materials and Inspections	5.2.3, 5.4.4
5.4.6	Reactor Vessel Design Data	Table 5.4.2-1
5.4.7	Reactor Vessel Schematic (BWR)	Not Applicable

5.4.1 Design Bases

5.4.1.1 Codes and Specifications

The reactor vessel and closure head are Safety Class A. Design and fabrication of the vessel were carried out in strict accordance with ASME Section III, Class A. Material specifications are in accordance with the ASME code requirements and are given in Section 5.2.

The completed closure head was modified at the plant site to include the addition of four UHI head adapters. These modifications were treated as alterations to the head and were done in accordance with National Board requirements. The National Board requirements are that the alterations be performed in accordance with the applicable ASME Code rules and data forms must be filed with the National Board by the fabricator making the alterations.

The Upper Head Injection (UHI) head adapters were designed and manufactured in accordance with the rules of Section III of the ASME Code. Refer to subsection 5.4.2 for UHI modification description.

5.4.1.2 Design Transients

Cyclic loads are introduced by normal power changes, reactor trip, startup and shutdown operations. These design base cycles are selected for fatigue evaluation and constitute a conservative design envelope for the projected plant life. Vessel analyses result in a usage factor that is less than 1.0.

With regard to the thermal and pressure transients involved in the Loss Of Coolant Accident (LOCA), the reactor vessel and closure head are analyzed to confirm that the delivery of cold emergency core cooling water to the vessel following a LOCA does not cause a loss of integrity of the vessel and head.

The design specifications require analysis to prove that the vessel is in compliance with the fatigue limits of Section III of the ASME Boiler and Pressure Vessel code. The loadings and transients specified for the analysis are based on the most severe conditions expected during service.

A control rod housing failure does not cause propagation of failure to adjacent housings or to any other part of the Reactor Coolant System (RCS) boundary.

The UHI head adaptors, which are still in place on the reactor vessel head, are analyzed and compared to the corresponding ASME code stress and fatigue limits to assure that the adaptor design is acceptable. Refer to subsection 5.4.2 for UHI modification description.

Design transients are discussed in detail in Section 5.2.

5.4.1.3 Protection Against Non-Ductile Failure

Protection against non-ductile failure is discussed in Section 5.2.

5.4.2 Description

The reactor vessel manufactured by DeRotterdame Drodgdak Mattschappu N.V. (The Rotterdam Dockyard Company) is cylindrical with a welded hemispherical bottom head and a removable, bolted flanged and gasketed, hemispherical upper head. The reactor vessel closure region is sealed by two hollow metallic O-rings. Seal leakage is detected by means of two leakoff connections, one between the inner and outer ring and one outside the outer O-ring. The vessel contains the core, core support structure, control rods, and other parts directly associated with the core. The reactor vessel closure head will contain the control rod drive mechanism (CRDM) and UHI head adaptors (UHI was removed Unit 1 Cycle 4 and Unit 2 Cycle 4).

The bottom head of the vessel contains penetrations for connection and entry of the nuclear incore instrumentation. Each penetration consists of a tubular member made of either an Inconel or an Inconel-stainless steel composite tube. Each tube is attached to the inside of the bottom head by a partial penetration weld.

Internal surfaces of the vessel which are in contact with primary coolant are weld overlay with 0.125 inch minimum of stainless steel or Inconel. The exterior of the reactor vessel is insulated with canned stainless steel reflective sheets. The insulation is three inches thick and contoured to enclose the top, sides and bottom of the vessel. Provision for removability of the insulation is made for the portions covering the closure head and bottom head to provide access for Inservice Inspection.

5.4.2.1 Fabrication Processes

1. The use of severely sensitized stainless steel as a pressure boundary material has been prohibited and has been eliminated by either a select choice of material or by programming the method of assembly.

This restriction on the use of sensitized stainless steel has been established to provide the primary system with preferential materials suitable for:

a. Improved resistance to contaminants during shop fabrication, shipment, construction and operation;

b. Application in critical areas.

2. Minimum preheat requirements have been established for pressure boundary welds using low alloy weld material. Special preheat requirements have been added for stainless steel cladding of low stress areas. Preheat must be maintained until post weld heat treatment, except for overlay cladding where it may be lowered to ambient temperature under restrictive conditions. The purpose of placing limitations on preheat requirements is the addition of precautionary measures to decrease the probabilities of weld cracking by decreasing temperature gradients, lower susceptibility to brittle transformation, prevention of hydrogen embrittlement and reduction in peak hardness.

3. The threads of the control rod drive mechanism head adaptors and UHI adaptors as well as the surfaces of the guide studs are chrome plated to prevent possible galling of the mated parts.

4. At all locations in the reactor vessel where stainless steel and Inconel are joined, the final joining beads are Inconel weld metal in order to prevent cracking.

5. The location of full penetration weld seams in the upper closure head and bottom head are restricted to areas that permit accessibility during inservice inspection.

6. The modifications to the closure head for the UHI adaptors were performed in accordance with the requirements of Paragraph NB-4643, "Weld Repairs to Cladding After Final Postweld Heat Treatment," of the Summer 1972 Addenda to Section III of the ASME Boiler and Pressure Vessel Code. The partial penetration weld details were in accordance with Paragraph NB-3352, 4(d) and Figure NB-3352, 4-4(c) of the 1971 Edition ASME code. Figure 5.4.2-1 shows the weld groove geometry buttering configuration, and welding detail for the UHI adaptor attachment weld to the closure head. This weld detail was established to comply with the requirements of the three ASME code paragraphs listed above. The buttering will be a minimum of 1/8 inch thick and will consist of two layers using the half bead technique. The welding detail in Figure 5.4.2-1 shows the possible removal of a portion of the adaptor wall thickness for better welder accessibility to the narrow weld groove. The tube wall thickness is greatly oversized for rigidity reasons and this undercut will be restricted so it does not impinge on the required pressure thickness of the tube.

Principal design parameters of the reactor vessel are given in Table 5.4.2-1.

5.4.2.2 Protection of Closure Studs

Westinghouse refueling procedures typically require the studs, nuts and washers to be removed from the reactor closure and be placed in storage racks during preparations for refueling. The storage racks are then removed from the refueling cavity and stored at convenient locations on the containment operating deck prior to reactor closure removal and refueling cavity flooding. The stud holes in the reactor flange are sealed with special plugs before removing the reactor closure, thus preventing leakage of the borated refueling water into the stud holes. These procedures recognize that studs occasionally become stuck, at which time additional actions are required to protect the stud. In the event a closure stud cannot be removed prior to cavity flooding, the appropriate administrative measures shall be implemented to cover and seal the stud. Therefore, the reactor closure studs are never exposed to borated refueling cavity water. However, if it is determined that the closure stud is damaged beyond repair prior to removal, protective measures will only be required to preclude to borated refueling water from contacting the stud hole threads within the reactor vessel. Depending on the stud location, consideration must be made for the control of heavy loads and safe load paths (NUREG 0612).

5.4.3 Evaluation

5.4.3.1 Normal

Evaluation of normal stresses is discussed in Paragraph 5.2.1.4.

5.4.3.2 Fatigue Analysis Based on Transient Stresses

Fatigue analysis on transient stresses is discussed in Paragraph 5.2.1.4.

5.4.3.3 Thermal Stresses Due to Gamma Heating

The stresses due to gamma heating in the vessel wall are calculated by the vessel vendor and combined with the other design stresses. They are compared with the code allowable limit for mechanical plus thermal stress intensities to verify that they are acceptable. The gamma stresses are low and thus have a negligible effect on the stress intensity in the vessel.

5.4.3.4 Thermal Stresses Due to Loss of Coolant Accident (LOCA)

In the event of a large LOCA, the Reactor Coolant System rapidly depressurizes, and the loss of coolant may empty the reactor vessel. If the reactor is at normal operating conditions before the accident, the reactor vessel and closure head temperatures are approximately 550°F. If the plant has been in operation for some time, part of the reactor vessel is irradiated. At an early stage in the depressurization transient, the Emergency Core Cooling System (ECCS) rapidly injects cold coolant into the reactor vessel. This results in thermal stress in the vessel wall and closure head. To evaluate the effect of the stress, three possible modes of failure are considered in the vessel; ductile yielding, brittle fracture and fatigue.

Ductile Mode - The failure criterion used for this evaluation is that there shall be no gross yielding across the vessel wall using the material yield stress specified in Section III of the ASME Nuclear Power Plant Components Code. The combined pressure and thermal stresses during injection through the vessel thickness as a function of time have been calculated and compared to the material yield stress at the times during the safety injection transient. The results of the analyses showed that local yielding may occur only in approximately the inner 18 percent of the base metal and in the vessel cladding, complying with the above criterion.

Brittle Mode - The beltline region of the reactor vessel was chosen for analysis because the material adjacent to the centerline of the reactor core is subjected to the highest irradiation level and thus has the lowest end-of-life fracture resistance in the vessel. This analysis is performed assuming the variation effects of water temperature, heat transfer coefficients and fracture toughness as a function of time, temperature, and irradiation. Both a local crack effect and a continuous crack effect have been considered with the latter requiring the use of a rigorous finite element axisymmetric code. It is concluded from the analysis that if the NSSS sustains a large LOCA the integrity of the reactor pressure vessel would be maintained and the plant could be shutdown in an orderly manner.

Fatigue Mode - From the standpoint of fatigue, the region of the in-core instrumentation tube attachment welds to the vessel bottom head is the most sensitive region of the reactor vessel during a loss of coolant accident. This location will have the highest usage factor. The failure criterion used for the failure analysis is that of Section III of the ASME Boiler and Pressure Vessel Code. In this method the piece is assumed to fail once the combined usage factor at the most critical location for all transients applied to the vessel exceeds the core allowable usage factor of one. As a worst case

assumption, the incore instrument tubes and attachment penetration welds are considered to be quenched to the cooling water temperature while the vessel wall maintains its initial temperature before the start of the transient. The maximum possible pressure stress during the transient is also taken into account. This method of analysis is quite conservative and yields calculated stresses greater than would actually be experienced. The resulting usage factor for the instrument tube welds considering all the operating transients and including the safety injection transient occurring at the end of the plant life is below 0.2 which compares favorably with the code allowable usage factor of 1.0.

Since the closure head receives insignificant irradiation, it is evaluated in a ductile manner for LOCA. This analysis shows the closure head meets the applicable ASME code allowable limits.

It is concluded from the results of these analyses that the delivery of cold emergency core cooling water to the reactor vessel following a loss of coolant accident does not cause any loss of integrity of the vessel.

5.4.3.5 Stresses in UHI Adaptors

The UHI adaptor weld stress for normal and upset conditions, i.e., those anticipated during the course of plant life, was carried out in conformance with NB3337.3 of section III of the ASME Code. The weld stresses are evaluated for normal, upset, and faulted conditions. Emergency conditions were not evaluated since these transients are always less severe than those imposed by faulted conditions and do not constitute the limiting case for operability requirements as do upset conditions. A detailed stress analysis of the adaptors and head modification was performed by the reactor vessel supplier. This analysis was added as an addendum to the original reactor vessel stress report performed by the vessel vendor.

5.4.3.6 Heatup and Cooldown

Heatup and cooldown requirements for the reactor vessel material are discussed in Section 5.2.4.3.

5.4.3.7 Reactor Vessel Material Surveillance Program Requirements

In the surveillance programs, the evaluation of the radiation damage is based on pre-irradiation testing of Charpy V-notch and tensile specimens and post-irradiation testing of Charpy V-notch, tensile, and wedge opening loading (WOL) fracture mechanics test specimens. These programs are directed toward evaluation of the effect of radiation on the fracture toughness of reactor vessel steels based on the transition temperature approach and the fracture mechanics approach, and is in accordance with ASTM E185, "Recommended Practice for Surveillance Tests for Nuclear Reactor Vessels." ASTM E185-73 is the basis for the original surveillance program; however, removal and evaluation of surveillance capsules are in accordance with ASTM E185-82.

The reactor vessel surveillance program uses eight specimen capsules. The capsules are located in guide baskets welded to the outside of the thermal shield as shown in Figure 5.4.3-1 about 3 inches from the vessel directly opposite the center portion of the core. Sketches of an elevation and plan view showing the location and dimensional spacing of the capsules with relation to the core, thermal shield and vessel and weld seams are shown in Figures 5.4.3-2 and 5.4.3-3 respectively. The capsules can be removed when the vessel head is removed, and can be replaced when the internals are removed. The capsules contain reactor vessel steel specimens oriented in the major working direction and normal to the major working direction from the limiting SA-508 Class 2 shell forging located in the core region of the reactor and associated weld metal and heat affected zone metal. (As part of the

surveillance program, a report of the residual elements in weight percent to the nearest 0.01 percent was made for surveillance material base metal and as deposited weld metal. [8]) The eight capsules contain approximately 32 tensile specimens, 352 Charpy V-notch specimens (which include weld metal and heat affected zone material) and 32 WOL specimens. Dosimeters including Ni, Cu, Fe, Co-Al, Cd shielded Co-Al, Cd shielded Np-237 and Cd shielded U-238 are placed in filler blocks drilled to contain the dosimeters. The dosimeters permit evaluation of the flux seen by the specimens and vessel wall. In addition, thermal monitors made of low melting alloys are included to monitor temperature of the specimens. The specimens are enclosed in a tight fitting stainless steel sheath to prevent corrosion and ensure good thermal conductivity. The complete capsule is helium leak tested. Vessel material sufficient for at least 2 capsules will be kept in storage should the need arise for additional replacement test capsules in the program.

Four capsules (S, V, W, and X) contain the following specimens:

Material	No. of Charpys	No. of Tensiles	No. of WOLS
Limiting Forging*	8	-	-
Limiting Forging**	12	2	4
Weld Metal	12	2	-
Heat Affected Zone Metal	12	-	-

Four additional capsules (T, U, Y, and Z) contain the following specimens:

Material	No. of Charpys	No. of Tensiles	No. of WOLS
Limiting Forging*	8	-	-
Limiting Forging**	12	2	-
Weld Metal	12	2	4
Heat Affected Zone Metal	12	-	-

* Specimens oriented in the major working direction (Tangential).
** Specimens oriented normal to the major working direction (Axial).

The following dosimeters and thermal monitors are included in each capsule:

Dosimeters

Iron
Nickel
Copper
Cobalt-Aluminum (0.15% Co)
Cobalt-Aluminum (Cadmium shielded)
U-238 (Cadmium shielded)
Np 237 (Cadmium shielded)

Thermal Monitors

97.5% Pb, 2.5% Ag (approximately 579°F Melting Point)
97.5% Pb, 1.75% Ag, 0.75% Sn (approximately 590°F Melting Point)

The fast neutron exposure of the specimens occurs at a faster rate than that experienced by the vessel wall with the specimens being located between the core and the vessel and with the sequenced removal and reinsertion of capsules as noted in the tentative removal schedule. Since these specimens experience accelerated exposure and are actual samples from the materials used in the vessel, the NDTT measurements are representative of the vessel at a later time in life. Data from fracture toughness samples (WOL) are expected to provide additional information for use in determining allowable stresses for irradiated material.

The eight reactor vessel surveillance capsules were located at 4° and 40° as shown in Figure 5.4.3-3. Unit 1 original Capsules at Locations T, U, X, & Y were removed in accordance with the surveillance capsule withdrawal schedule. Unit 1 Specimens S & W were relocated to higher fluence locations, but were subsequently damaged during Unit 1 Cycle 20 operation and no longer exist. Capsule V was moved to Location U (140°) during the Unit 1 Cycle 22 refueling outage. Unit 2 original Capsules at Locations T, U, X & Y were removed in accordance with the surveillance capsule withdrawal schedule. Unit 2 Specimens S & W were moved to Locations T & U; however, the Specimen S was removed following Unit 2 Cycle 20 operation due to seating concerns of the as-found capsule. Reference 6 contains more details on the reactor Vessel Surveillance Program, including withdrawal schedules, specimen locations, and fluence values.

Correlations between the calculations and the measurements on the irradiated samples in the capsules, assuming the same neutron spectrum at the samples and the vessel inner wall, are described in 5.4.3.7.1 and have indicated good agreement. The calculation of the integrated flux at the vessel wall is conservative.

The anticipated degree to which the specimens will perturb the fast neutron flux and energy distribution will be considered in the evaluation of the surveillance specimen data. Verification and possible readjustment of the calculated exposure will be made by use of data on all capsules withdrawn.

Each specimen capsule upon removal after radiation exposure will be transferred to a post-irradiation test facility for disassembly of the capsule and testing of all specimens.

With the withdrawal of Capsule Y, Sequoyah Nuclear Plant (SQN) Units 1 and 2 fulfilled the surveillance capsule withdrawal recommendations contained in ASTM E185-73 for their 40 year end-of-life (EOL) (32 EFPY). To support the 20 year life extension for SQN Units 1 and 2, the capsules designated in Reference 6 have been relocated to higher lead factor locations.

Relocation of Unit 1 Capsule V and Unit 2 Capsule W places them at locations of higher fluence, to support future capsule withdrawal for irradiation assessments. One of these relocated capsules in each unit should be subsequently withdrawn from the reactor vessel and tested at the time when the accumulated neutron fluence of the capsule corresponds to not less than once or greater than twice the peak 60 year vessel fluence. Reference 6 provides the bases for capsule relocation and the withdrawal times recommended in support of plant life extension for both units.

For SQN Unit 1, the potential capsule withdrawal times associated with capsule relocation from the 4° to the 40° and 140° azimuthal location (from Reference 6) are:

Unit 1 Capsule Relocation Time	Capsule Time (EFPY) Corresponding to Vessel Life	
	60 Years of Operation (52 EFPY)	80 Years of Operation (72 EFPY)
EOC21	35.4	41.5
EOC22*	36.4	42.5
EOC23	37.3	43.4

These dates are based on the capsule fluence being equivalent to one times the peak vessel fluence at 60 years (2.66×10^{19} n/cm^2) as well as one times the peak vessel fluence at 80 years (3.56×10^{19} n/cm^2).

For SQN Unit 2, the potential capsule withdrawal times associated with capsule relocation from the 4° to the 40° and 140 °azimuthal location (from Reference 6) are:

Unit 2 Capsule Relocation Time	Capsule Time (EFPY) Corresponding to Vessel Life	
	60 Years of Operation (52 EFPY)	80 Years of Operation (72 EFPY)
EOC18	32.6	39.3
EOC19*	33.7	40.4
EOC20	34.7	41.4

These dates are based on the capsule fluence being equivalent to one times the peak vessel fluence at 60 years (2.57×10^{19} n/cm^2) as well as one times the peak vessel fluence at 80 years (3.52×10^{19} n/cm^2).

*Actual capsule relocation time

5.4.3.7.1 Measurement of Integrated Fast Neutron (E > 1.0 Mev) Flux at the Irradiation Samples

The use of passive neutron sensors such as those included in the internal surveillance capsule dosimetry sets does not yield a direct measure of the energy dependent neutron flux level at the measurement location. Rather, the activation or fission process is a measure of the integrated effect that the time- and energy-dependent neutron flux has on the target material over the course of the irradiation period. An accurate assessment of the average flux level, and hence, time integrated exposure (fluence) experienced by the sensors may be developed from the measurements only if the sensor characteristics and the parameters of the irradiation are well known. In particular, the following variables are of interest:

1) the measured specific activity of each sensor;

2) the physical characteristics of each sensor;

3) the operating history of the reactor;

4) the energy response of each sensor; and

5) the neutron energy spectrum at the sensor location.

In this section the procedures used to determine sensor specific activities, to develop reaction rates for individual sensors from the measured specific activities and the operating history of the reactor, and to derive key fast neutron exposure parameters from the measured reaction rates are described.

5.4.3.7.1.1 Determination of Sensor Reaction Rates

The specific activity of each of the radiometric sensors is determined using established ASTM procedures. Following sample preparation and weighing, the specific activity of each sensor is determined by means of a high purity germanium gamma spectrometer. In the case of the surveillance capsule multiple foil sensor sets, these analyses are performed by direct counting of each of the individual wires; or, as in the case of U-238 and Np-237 fission monitors, by direct counting preceded by dissolution and chemical separation of cesium from the sensor.

The irradiation history of the reactor over its operating lifetime is determined from plant power generation records. In particular, operating data are extracted on a monthly basis from reactor startup to the end of the capsule irradiation period. For the sensor sets utilized in the surveillance capsule irradiations, the half-lives of the product isotopes are long enough that a monthly histogram describing reactor operation has proven to be an adequate representation for use in radioactive decay corrections for the reactions of interest in the exposure evaluations.

Having the measured specific activities, the operating history of the reactor, and the physical characteristics of the sensors, reaction rates referenced to full power operation are determined from the following equation:

$$R = \frac{A}{N_0 F Y \sum_j \frac{P_j}{P_{ref}} C_j \left[1 - e^{-\lambda t_j}\right] e^{-\lambda t_d}}$$

where:

A	=	measured specific activity provided in terms of disintegrations per second per gram of target material (dps/gm).
R	=	reaction rate averaged over the irradiation period and referenced to operation at a core power level of P_{ref} expressed in terms of reactions per second per nucleus of target isotope (rps/nucleus).
N_0	=	number of target element atoms per gram of sensor.
F	=	weight fraction of the target isotope in the sensor material.
Y	=	number of product atoms produced per reaction.
P_j	=	average core power level during irradiation period j (MW).
P_{ref}	=	maximum or reference core power level of the reactor (MW).
C_j	=	calculated ratio of ϕ(E> 1.0 MeV) during irradiation period j to the time weighted average ϕ(E> 1.0 MeV) over the entire irradiation period.
λ	=	decay constant of the product isotope (sec^{-1}).
t_j	=	length of irradiation period j (sec).
t_d	=	decay time following irradiation period j (sec).

and the summation is carried out over the total number of monthly intervals comprising the total irradiation period.

In the above equation, the ratio P_j/P_{ref} accounts for month-by-month variation of power level within a given fuel cycle. The ratio C_j is calculated for each fuel cycle and accounts for the change in sensor reaction rates caused by variations in flux level due to changes in core power spatial distributions from fuel cycle to fuel cycle. Since the neutron flux at the measurement locations within the surveillance capsules is dominated by neutrons produced in the peripheral fuel assemblies, the change in the relative power in these assemblies from fuel cycle to fuel cycle can have a significant impact on the activation of neutron sensors. For a single-cycle irradiation, C_j = 1.0. However, for multiple-cycle irradiations, particularly those employing low leakage fuel management, the additional C_j correction must be utilized in order to provide accurate determinations of the decay corrected reaction rates for the dosimeter sets contained in the surveillance capsules.

5.4.3.7.1.2 Corrections to Reaction Rate Data

Prior to using the measured reaction rates in the least squares adjustment procedure discussed in Section 5.4.3.7.1.3, additional corrections are made to the U-238 measurements to account for the presence of U-235 impurities in the sensors as well as to adjust for the build-in of plutonium isotopes over the course of the irradiation.

In addition to the corrections made for the presence of U-235 in the U-238 fission sensors, corrections are also made to both the U-238 and Np-237 sensor reaction rates to account for gamma ray induced fission reactions occurring over the course of the irradiation.

5.4.3.7.1.3 Least Squares Adiustment Procedure

Least squares adjustment methods provide the capability of combining the measurement data with the neutron transport calculation resulting in a Best Estimate neutron energy spectrum with associated uncertainties. Best Estimates for key exposure parameters such as neutron fluence (E> 1.0 MeV) or iron atom displacements (dpa) along with their uncertainties are then easily obtained from the adjusted spectrum. The use of measurements in combination with the analytical results reduces the uncertainty in the calculated spectrum and acts to remove biases that may be present in the analytical technique.

In general, the least squares methods, as applied to pressure vessel fluence evaluations, act to reconcile the measured sensor reaction rate data, dosimetry reaction cross-sections, and the calculated neutron energy spectrum within their respective uncertainties. For example,

$$R_j \pm \delta_{R_i} = \sum_g \left(\sigma_{ig} \pm \delta_{\sigma_{ig}} \right) \left(\phi_g \pm \delta_{\phi_g} \right)$$

relates a set of measured reaction rates, R_i, to a single neutron spectrum, ϕ_g, through the multigroup dosimeter reaction cross-section, σ_{ig}, each with an uncertainty δ.

The use of least squares adjustment methods in LWR dosimetry evaluations is not new. The American Society for Testing and Materials (ASTM) has addressed the use of adjustment codes in ASTM Standard E944, "Application of Neutron Spectrum Adjustment Methods in Reactor Surveillance" and many industry workshops have been held to discuss the various applications. For example, the ASTM-EURATOM Symposia on Reactor Dosimetry holds workshops on neutron spectrum unfolding and adjustment techniques at each of its bi-annual conferences.

The primary objective of the least squares evaluation is to produce unbiased estimates of the neutron exposure parameters at the location of the measurement. The analytical method alone may be deficient because it inherently contains uncertainty due to the input assumptions to the calculation. Typically these assumptions include parameters such as the temperature of the water in the peripheral fuel assemblies, bypass region, and downcomer regions, component dimensions, and peripheral core source. Industry consensus indicates that the use of calculation alone results in overall uncertainties in the neutron exposure parameters in the range of 15-20% (1σ).

The application of the least squares methodology requires the following input:

1. The calculated neutron energy spectrum and associated uncertainties at the measurement location.

2. The measured reaction rate and associated uncertainty for each sensor contained in the multiple foil set.

3. The energy dependent dosimetry reaction cross-sections and associated uncertainties for each sensor contained in the multiple foil sensor set.

For a given application, the calculated neutron spectrum is obtained from the results of plant specific neutron transport calculations applicable to the irradiation period experienced by the dosimetry sensor set. This calculation is performed using the benchmarked transport calculational methodology described in Section 5.4.3.7.2. The sensor reaction rates are derived from the measured specific activities obtained from the counting laboratory using the specific irradiation history of the sensor set to perform the radioactive decay corrections. The dosimetry reaction cross-sections and uncertainties that are utilized in LWR evaluations comply with ASTM Standard E1018, "Application of ASTM Evaluated Cross-Section Data File, Matrix E 706 (IIB)."

The uncertainties associated with the measured reaction rates, dosimetry cross-sections, and calculated neutron spectrum are input to the least squares procedure in the form of variances and covariances. The assignment of the input uncertainties also follows the guidance provided in ASTM Standard E 944.

5.4.3.7.2 Calculation of Integrated Fast Neutron (E> 1.0 MeV) Flux at the Irradiation Samples

A generalized set of guidelines for performing fast neutron exposure calculations within the reactor configuration, and procedures for analyzing measured irradiation sample data that can be correlated to these calculations, has been promulgated by the Nuclear Regulatory Commission (NRC) in Regulatory Guide 1.190, "Calculational and Dosimetry Methods for Determining Pressure Vessel Neutron Fluence" [Reference 1]. Since different calculational models exist and are continuously evolving along with the associated model inputs, e.g., cross-section data, it is worthwhile summarizing the key models, inputs, and procedures that the NRC staff finds acceptable for use in determining fast neutron exposures within the reactor geometry. This material is highlighted in the subsection of material that is provided below.

5.4.3.7.2.1 Calculation and Dosimetrv Measurement Procedures

The selection of a particular geometric model, the corresponding input data, and the overall methodology used to determine fast neutron exposures within the reactor geometry are based on the needs for accurately determining a solution to the problem that must be solved and the data/resources that are currently available to accomplish this task. Based on these constraints, engineering judgment is applied to each problem based on an analyst's thorough understanding of the problem, detailed knowledge of the plant, and due consideration to the strengths and weaknesses associated with a given calculational model and/or methodology. Based on these conditions, Regulatory Guide 1.190 does not recommend using a singular calculational technique to determine fast neutron exposures. Instead, RG-1.190 suggests that one of the following neutron transport tools be used to perform this work.

- Discrete Ordinates Transport Calculations

  a) Adjoint calculations benchmarked to a reference-forward calculation, or stand-alone forward calculations.

  b) Various geometrical models utilized with suitable mesh spacing in order to accurately represent the spatial distribution of the material compositions and source.

  c) In performing discrete ordinates calculations, RG-1.190 also suggests that a P_3 angular decomposition of the scattering cross-sections be used, as a minimum.

  d) RG-1.190 also recommends that discrete ordinates calculations utilize S_8 angular quadrature, as a minimum.

  e) RG-1.190 indicates that the latest version of the Evaluated Nuclear Data File, or ENDFIB, should be used for determining the nuclear cross-sections; however, cross-sections based on earlier or equivalent nuclear data sets that have been thoroughly benchmarked are also acceptable.

- Monte Carlo Transport Calculations

A complete description of the Westinghouse pressure vessel neutron fluence methodology, which is based on discrete ordinates transport calculations, is provided in Reference 2. The Westinghouse methodology adheres to the guidelines set forth in Regulatory Guide RG-1.190.

5.4.3.7.2.2 Plant-Specific Calculations

The most recent dosimetry analyses for both Sequoyah units, including the vessel fluence assessment that was made to support the Sequoyah 1.3% Uprate Program, were based on discrete ordinates transport calculations. All of these calculations were conducted in accordance with the guidelines that are specified in Regulatory Guide RG-1.190.

5.4.3.8 Capability for Annealing the Reactor Vessel

There are no special design features which would prohibit the onsite annealing of the vessel. If the unlikely need for an annealing operation was required to restore the properties of the vessel material opposite the reactor core because of neutron irradiation damage, a metal temperature of approximately 750°F maximum for a period of 168 hours maximum would be applied. This annealing operation would be performed with the use of a special electrical space heater assembly designed to raise the affected vessel area to the required temperature for the necessary holding period. This heater assembly will consist of an insulated vessel cover assembly below which is suspended the required space heaters positioned opposite the affected area of the reactor vessel shell. The heater assembly will contain provisions for sealing to the vessel flange, and waterproof electric connections. Hydraulic connections for emptying the reactor vessel of water after the assembly is in place are also required. A thermocouple assembly to monitor vessel metal temperature during annealing would also be included.

The reactor vessel materials surveillance program is adequate to accommodate the annealing of the reactor vessel. The remaining surveillance capsules at the time of annealing would be removed and given a thermal cycle equivalent to the annealing cycle. They would then be reinserted in their normal position between the core internals assembly and the reactor vessel wall. Subsequent testing of the fracture toughness specimens from the capsules would then reflect both the radiation environment before any annealing operation and after any annealing operation.

5.4.4 Tests and Inspections

The reactor vessel quality assurance program is located in Table 5.4.4-1.

5.4.4.1 Ultrasonic Examinations

1. During fabrication, in addition to the Design Code required straight beam ultrasonic examination, an angle beam examination of 100 percent of the plate material was performed to detect discontinuities that may go undetected by the straight beam examination.

2. The reactor vessel was examined after hydro-testing to provide a baseline map for use as a reference document in relation to later in-service examinations.

3. The UHI adaptor and attachment welds to the closure head received both straight beam and angle beam ultrasonic examination.

4. A special pre-service examination of the reactor vessel nozzles was conducted to evaluate the extent of underclad cracking. The examination utilized a 70° angle beam and 0° beam manual contact technique. All indications found were demonstrated to be acceptable in accordance with ASME Code Section XI criteria.

5.4.4.2 Penetrant Examinations

The partial penetration welds for the control rod drive mechanism head adaptors and UHI adaptors were examined by dye penetrant after the first layer of weld metal, after each 1/4 inch of weld metal, and the final surface. Bottom instrumentation tubes were examined by dye penetrant after each layer of weld metal. Core support block attachment welds were examined by dye penetrant after first layer of weld metal, and after each 1/2 inch of weld metal. This is required to detect cracks or other defects, lower the weld surface temperatures, cleanliness and prevent microfissures. All austenitic stainless steel clad surfaces were 100 percent liquid penetrant examined after the hydrostatic test.

5.4.4.3 Magnetic Particle Examination

1. All surfaces of quenched and tempered materials had the inside diameters inspected prior to cladding and the outside diameter 100 percent examined after hydro-testing. This serves to detect possible defects resulting from the forming and heat treatment operations.

2. The attachment welds for the vessel supports, lifting lugs and refueling seal ledge were examined after the first layer of weld metal and after each 1/2 inch of weld thickness. Where welds are back chipped, the areas were examined prior to welding.

5.4.4.4 Reactor Vessel Inservice Inspection

The Inservice Inspection Program is addressed in Section 5.2.8.

The welds in the following areas of the installed irradiated reactor vessel are available for ASME Section XI required inspections.

1. Vessel shell - The inside surface.

2. Primary coolant nozzles - The inside surface.

3. Vessel heads - The inside and outside surface.

   The lower head weld on each reactor pressure vessel is partially inaccessible for examination from the vessel inside diameter due to instrumentation tubes which penetrate the lower head. A 100 percent pre-service examination of the weld was conducted from the vessel outside diameter. This was accomplished by performance of a manual ultrasonic examination. A remote ultrasonic examination was conducted from the vessel inside diameter on all accessible areas of the weld. Accessible areas of the weld will be reexamined during the inservice intervals in accordance with Section XI of the ASME Boiler and Pressure Vessel Code.

4. Closure studs, nuts and washers.

5. Field welds between the reactor vessel nozzles, and the main coolant piping.

6. Vessel flange seal surface.

7. CRDM and UHI adaptors.

The design considerations which have been incorporated into the system design to permit the above examinations are as follows:

1. All reactor internals are completely removable. The tools and storage space required to permit these examinations are provided.

2. The closure head is stored dry on the reactor operating deck with the insulation capable of being temporarily removed during refueling to facilitate examinations.

3. Typically, reactor vessel studs, nuts and washers are removed to dry storage during refueling.

4. Removable covers are provided in the reactor cavity floor. The insulation covering the nozzle welds may be removed.

5. Irradiation specimen access holes are provided in the lower internals barrel flange to allow remote access to the reactor vessel internal surfaces between the flange and the nozzles without removal of the internals.

6. A removable manway cover is provided in the lower core support plate to allow access for examination of the bottom head without removal of the lower internals.

The reactor vessel presents access problems because of the radiation levels and remote underwater accessibility to this component. Because of these limitations on access to the reactor vessel, several steps have been incorporated into the design and manufacturing procedures in preparation for the periodic non-destructive examination which are required by Section XI of the ASME boiler and pressure vessel code. These are:

1. Shop ultrasonic examinations were performed on all internally clad surfaces to an acceptance and repair standards to assure an adequate cladding bond to allow later ultrasonic examination of the base metal from inside surface. The size of cladding bonding defect allowed was 3/4 of an inch in diameter.

2. The design of the reactor vessel shell in the core area is a clean, uncluttered cylindrical surface to permit future positioning of the examination equipment without obstruction.

3. After the shop hydrostatic testing, selected areas of the reactor vessel were ultrasonically examined and mapped to facilitate the Inservice Inspection Program. Vessel design data is in Table 5.4.2-1. Transients and anticipated number of cycles are in Table 5.2.1-1. The reactor vessel quality assurance program is in Table 5.4.4-1.

5.4.5 References

1 Regulatory Guide RG-1.190 (RG-1.19O), "Calculational and Dosimetry Methods for Determining Pressure Vessel Neutron Fluence," United States Nuclear Regulatory Commission, Office of Nuclear Regulatory Research, March 2001.

2. WCAP-15557, "Qualification of the Westinghouse Pressure Vessel Neutron Fluence Evaluation Methodology," S. L. Anderson, August 2000.

3. "Radiation Damage Exposure and Embrittlement of Reactor Pressure Vessels," Sure, K., Nuclear Applications, Vol. 2 (April 1966).

4. "Analysis of the Auxiliary Head Adaptor" DeKoning, W., Koopmans, P., and Poost, J., 30616-1121, Revision 1, July 4, 1975.

5. "Sequoyah Unit No. 1 Reactor Vessel Radiation Surveillance Program," Yanichko, S. E. Lege, D. J., and Phillips, J. H., WCAP-8233, December 1973, and "Sequoyah Unit No. 2 Reactor Vessel Radiation Surveillance Program," Davidson, J. A. Phillips, J. H., and Yanichko, S. E., WCAD-8513, November 1975.

6. Westinghouse Report WCAP-17539-NP, Revision 1, “Sequoyah Units 1 and 2 Time-Limited Aging Analysis on Reactor Vessel Integrity”, May 2015.

TABLE 5.4.2-1

REACTOR VESSEL DESIGN PARAMETERS

Design/Operating Pressure, psig	2485/2235
Design Temperature, °F	650
Overall Height of Vessel and Closure Head, ft-in. (Bottom Head O.D. to top of Control Rod Mechanism Adaptor)	43-9 5/8
Thickness of Insulation, min., in.	3
Number of Reactor Closure Head Studs	54
Diameter of Reactor Closure Head Studs, in.	7
ID of Flange, in.	167.0
OD of Flange, in.	205
ID at Shell, in.	173
Inlet Nozzle ID, in.	27-1/2
Outlet Nozzle ID, in.	29
Clad Thickness, min., in.	1/8
Lower Head Thickness, min., in.	5-1/2
Vessel Belt-Line Thickness, min., in.	8-1/2
Closure Head Thickness, in.	6-1/2

TABLE 5.4.4-1

REACTOR VESSEL QUALITY ASSURANCE PROGRAM

	RT*	UT*	PT*	MT*
Forgings & Tubes				
1. Flanges		yes		yes
2. Studs		yes		yes
3. CRDM and UHI Adaptors		yes	yes	
4. CRDM and UHI Adaptor Tubes		yes	yes	
5. Instrumentation Tube		yes	yes	
6. Main Nozzles		yes		yes
Plates		yes		yes
Weldments				
1. Main Seam	yes	yes**		yes
2. CRDM Head Adaptor to Head Connection			yes	
3. UHI Adaptor to Head Attachments		yes	yes	
4. Instrumentation Tube Connection			yes	
5. Main Nozzles	yes	yes**		yes
6. Cladding		yes(+)	yes	
7. Nozzle-safe ends (weld deposit)	yes	yes**	yes	
8. CRDM Head Adaptor Forging to Head Adaptor Tube	yes		yes	
9. UHI Adaptor Forging to Adaptor Tube#	yes	yes**	yes	
10. All Ferritic Welds Accessible After Hydrotest				yes
11. All Non-ferritic Welds Accessible After Hydrotest			yes	
12. Seal Ledge				yes
13. Head Lift Lugs				yes
14. Core Pad Welds		yes	yes	yes
15. UHI Tube Cap	yes	yes**	yes	

* RT - Radiographic
UT - Ultrasonic
PT - Dye Penetrant
MT - Magnetic Particle

(+) UT of Clad Bond-to-base Metal

** UT map for Section XI

The Adaptor Forging was removed and the tube was capped when UHI was removed. This weldment is left on this table for Historical purposes only.

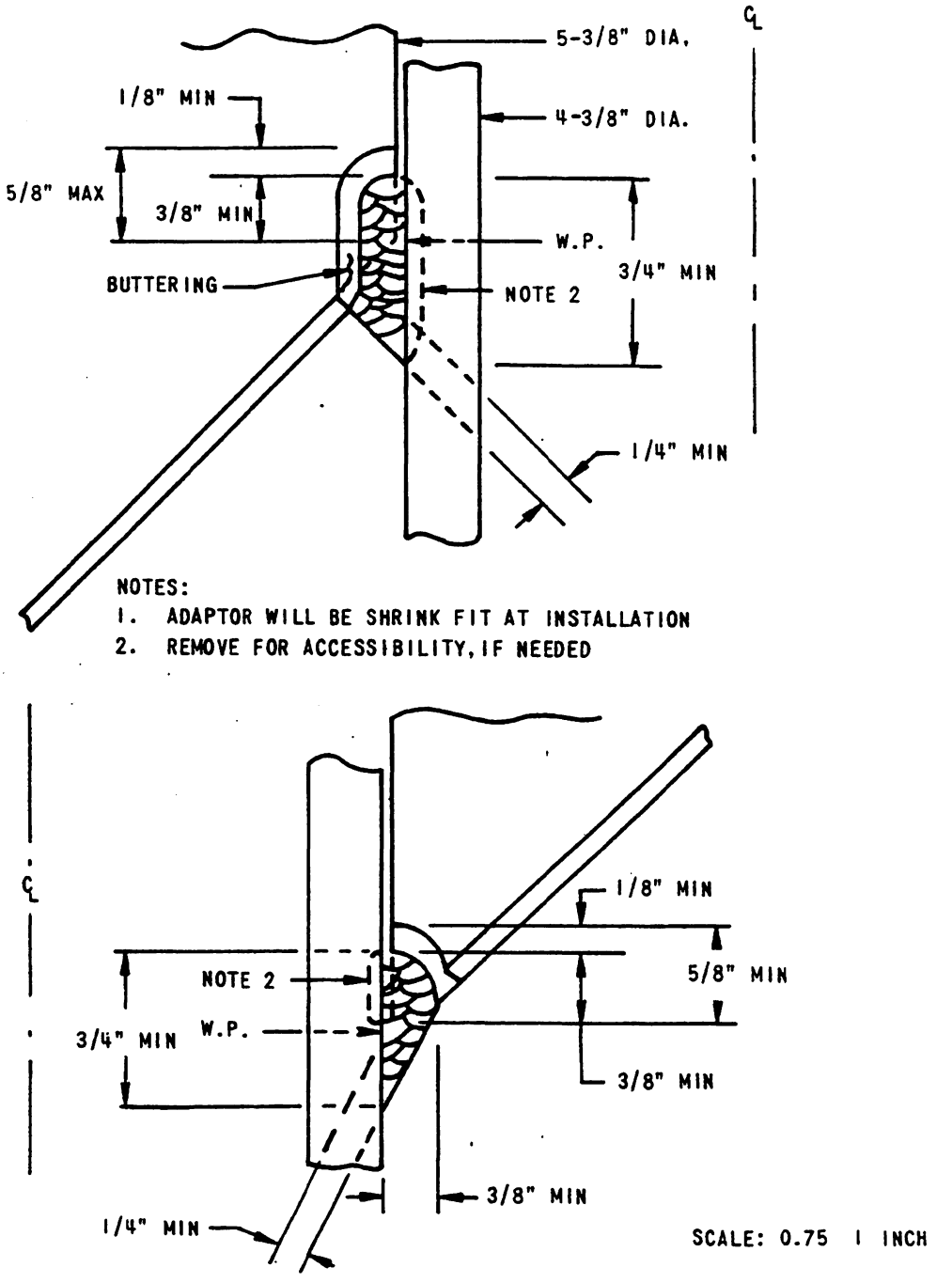

Figure 5.4.2-1 Welding Detail for UHI Head Adaptor

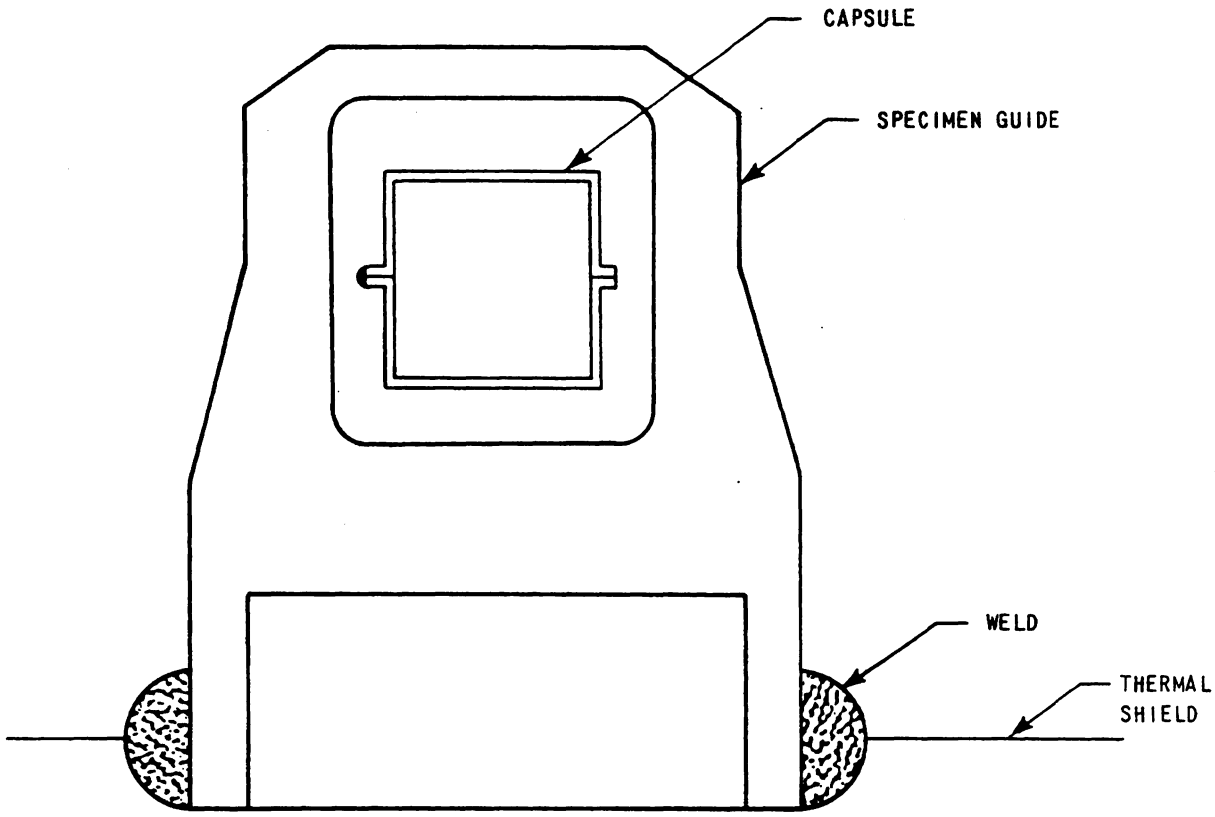

Figure 5.4.3-1 Specimen Guide to Thermal Shield Attachment

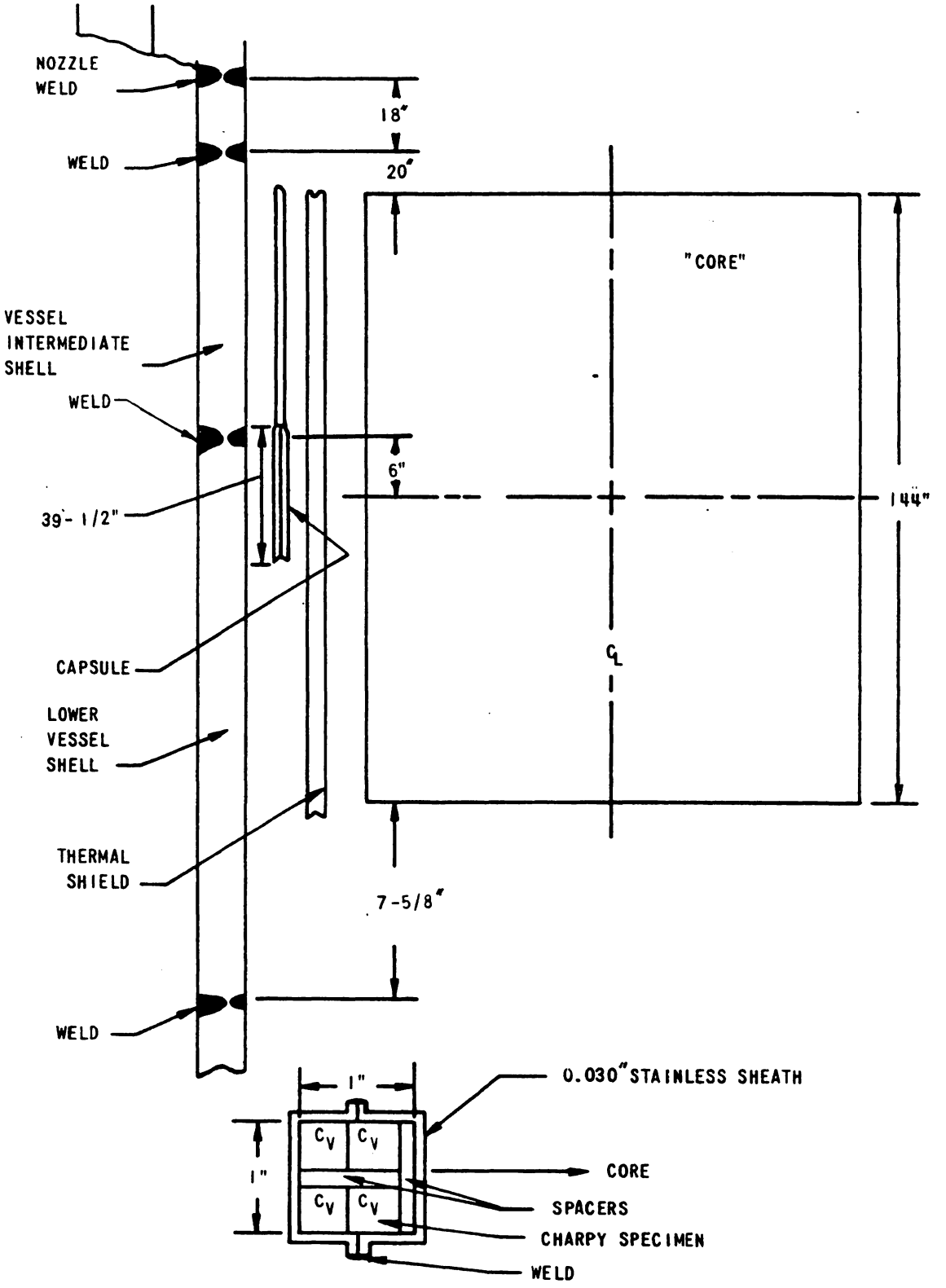

Figure 5.4.3-2 Surveillance Capsule Elevation View

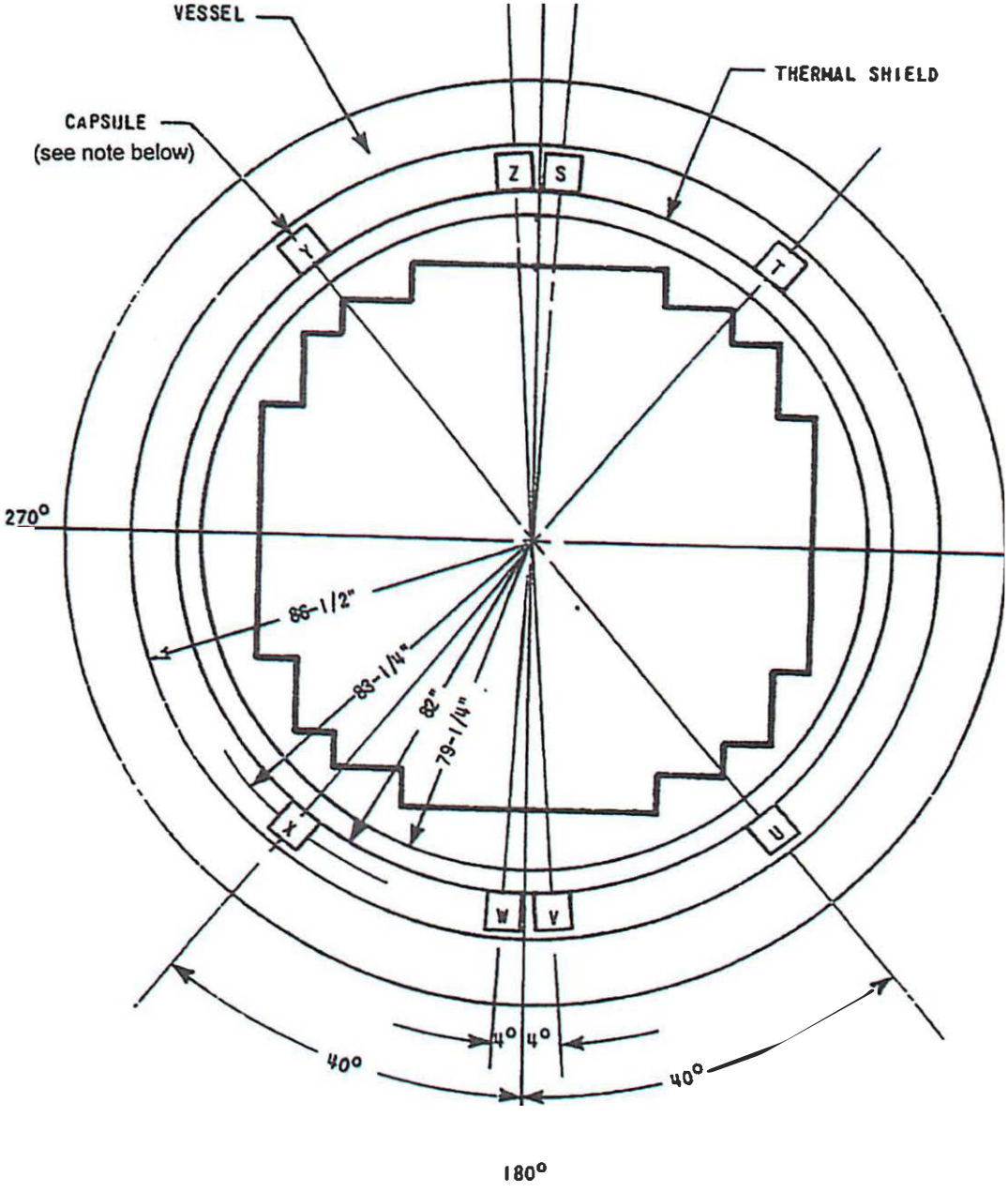

Figure 5.4.3-3 Surveillance Capsule Plan View

Note:

A total of eight surveillance capsules were originally installed at locations S, T, U. V, W, X, Y, and Z. Capsules at T, U, X, and Y have been removed and tested to fulfill the surveillance capsule withdrawal requirements contained in the 20 year License Extension, Unit 1 Capsule V was moved to Location U; Unit 2 Capsule W was moved to Location U.

5.5 COMPONENT AND SUBSYSTEM DESIGN

5.5.1 Reactor Coolant Pumps

5.5.1.1 Design Bases

The reactor coolant pump ensures an adequate core cooling flow rate and hence sufficient heat transfer to maintain a DNBR greater than 1.3 within the parameters of operation. The required net positive suction head is by conservative pump design always less than that available by system design and operation.

Sufficient pump rotation inertia is provided by a flywheel, in conjunction with the impeller and motor assembly, to provide adequate flow during coastdown. This flow following an assumed loss of pump power provides the core with adequate cooling.

The pump is capable of operation without mechanical damage at overspeeds up to and including 125 percent of normal speed.

The reactor coolant pump is shown in Figure 5.5.1-1. The reactor coolant pump design parameters are given in Table 5.5.1-1.

Code and material requirements are provided in Section 5.2.

5.5.1.2 Design Description

The reactor coolant pump is a vertical, single stage, centrifugal, shaft seal pump designed to pump large volumes of main coolant at high temperatures and pressures.

The pump assembly consists of three areas from bottom to top. They are the hydraulics, the shaft seals, and the motor.

1. The hydraulic section consists of an impeller, diffuser, casing, thermal barrier heat exchanger, lower radial bearing, bolting ring, motor stand, and pump shaft.

2. The shaft seal section consists of three devices. They are the number 1 controlled leakage, film riding face seal and the number 2 and number 3 rubbing face seals. The number 2 seal operation converts to a film riding seal as pressure increases. These seals are contained within the main flange and seal housing.

3. The motor section consists of a vertical solid shaft, squirrel cage induction type motor, an oil lubricated double Kingsbury type thrust bearing, two oil lubricated radial bearings, and a flywheel.

Attached to the bottom of the pump shaft is the impeller. The reactor coolant is drawn up through the impeller, discharged through passages in the diffuser, and out through the discharge nozzle in the side of the casing. Above the impeller is a thermal barrier heat exchanger which limits heat transfer between hot system water and seal injection water.

High pressure seal injection water is introduced through a connection on the thermal barrier flange and flows into the cavity between the main flange and thermal barrier. The injection water flows

upward to the radial bearing and into the seal while the remainder flows down through the thermal barrier labyrinth and past the cooling coils where it acts as a buffer to prevent RCS water from entering the radial bearing and seal section of the unit. The heat exchanger provides a means of cooling system water to an acceptable level in the event that seal injection flow is lost. The water lubricated journal-type pump bearing, mounted above the thermal barrier heat exchanger, has a self-aligning spherical seat.

The reactor coolant pump motor bearings are of conventional design. The radial bearings are the segmented pad type, and the thrust bearings are tilting pad Kingsbury bearings. All are oil lubricated. The lower radial bearing and the thrust bearings are submerged in oil, and the upper radial bearing is oil fed from an impeller integral with the thrust runner.

The motor is an air cooled, squirrel cage induction motor. The rotor and stator are of standard construction and are cooled by air. Multiple resistance temperature detectors are located throughout the stator to sense the winding temperature. The top of the motor consists of a flywheel and an anti-reverse rotation device.

Each of the reactor coolant pumps is equipped with vibration monitoring capabilities as provided by the Vibration and Loose Parts Monitoring System.

All parts of the pump in contact with the reactor coolant are austenitic stainless steel except for seals, bearings and special parts. Component cooling water is supplied to the two oil coolers on the pump motor and to the pump thermal barrier heat exchanger.

The pump shaft, seal housing, thermal barrier, bolting ring and motor stand can be removed from the casing as a unit without disturbing the reactor coolant piping. The flywheel is available for inspection by removing the cover.

The performance characteristic shown in Figure 5.5.1-2 is common to all of the fixed speed mixed flow pumps, and the "knee" at about 45 percent design flow introduces no operational restrictions, since the pumps operate at full flow.

5.5.1.3 Design Evaluation

5.5.1.3.1 Pump Performance

The reactor coolant pumps are sized to deliver flow at rates which equal or exceed the required flow rates. Initial RCS tests confirm the total delivery capability. Thus, assurance of adequate forced circulation coolant flow was provided prior to initial plant operation.

The Reactor Trip System ensures that pump operation is within the assumptions used for loss of coolant flow analyses, which also assures that adequate core cooling is provided to permit an orderly reduction in power if flow from a reactor coolant pump is lost during operation.

An extensive test program has been conducted for several years to develop the controlled leakage shaft seal for pressurized water reactor applications. Long term tests were conducted on less than full scale prototype seals as well as on full size seals. Operating plants continue to demonstrate the satisfactory performance of the controlled leakage shaft seal pump design.

The support of the stationary member of the number 1 seal ("seal ring") is such as to allow large deflections, both axial and tilting, while still maintaining its controlled gap relative to the seal runner. Even if all the graphite were removed from the pump bearing, the shaft could not deflect far enough to cause opening of the controlled leakage gap. The "spring-rate" of the hydraulic forces associated with the maintenance of the gap is high enough to ensure that the ring follows the runner under very rapid shaft deflections.

Testing of pumps with the number 1 seal entirely removed (full reactor pressure on the number 2 seal) shows that relatively small leakage rates would be maintained for long periods of time (approximately 100 hours) even if the number 1 seal fails entirely. The plant operator is warned of this condition by the increase in number 1 seal leakoff and has time to close this line, and to conduct a safe plant shutdown without significant leakage of reactor coolant to the containment. Thus, it may be concluded that gross leakage from the pump does not occur, even if the number 1 seal were to suffer physical damage.

A loss of off-site power will cause a temporary stoppage in the supply of injection flow to the pump seals and the cooling water for seal and bearing cooling. The emergency diesel generators are started automatically due to loss of off-site power so that seal water injection flow and component cooling flow are automatically restored.

5.5.1.3.2 Coastdown Capability

It is important to reactor operation that the reactor coolant continues to flow for a short time after reactor trip. In order to provide this flow in a station blackout condition, each reactor coolant pump is provided with a flywheel. Thus, the rotating inertia of the pump, motor and flywheel is employed during the coastdown period to continue the reactor coolant flow. Flow coastdown curves are shown in Subsection 15.2.

The pump is designed for the safe shutdown earthquake. Hence, it is concluded that the coastdown capability of the pumps is maintained even under the most adverse case of a blackout coincident with the safe shutdown earthquake.

5.5.1.3.3 Flywheel Integrity

Integrity of the reactor coolant pump flywheel is discussed in Subsection 5.2.6.

5.5.1.3.4 Bearing Integrity

The design requirements for the reactor coolant pump bearings are primarily aimed at ensuring a long life with negligible wear, so as to give accurate alignment and smooth operation over long periods of time. To this end, the surface-bearing stresses are held at a very low value, and even under the most severe seismic transients do not begin to approach loads which cannot be adequately carried for short periods of time.

Because there are no established criteria for short time stress-related failures in such bearings, it is not possible to make a meaningful quantification of such parameters as margins to failure, safety factors, etc. A qualitative analysis of the bearing design, embodying such considerations, gives assurance of the adequacy of the bearing to operate without failure.

Low oil level in the motor bearings actuates an alarm in the control room. Motor bearings contain an embedded temperature detector, and so initiation of failure, separate from loss of oil, is indicated and alarmed in the control room as a high bearing temperature. Confirmed high bearing temperature requires pump shutdown. Even if these indications were ignored, and the bearing proceeded to failure, the low melting point of Babbitt metal on the pad surfaces ensures that no sudden seizure of the bearing would occur. In this event the motor continues to drive, as it has sufficient reserve capacity to continue to operate, even under such conditions. However, it demands excessive currents and shut down will eventually result from current demand.

5.5.1.3.5 Locked Rotor

It may be hypothesized that the pump impeller might severely rub on a stationary member and then seize. Analysis has shown that under such conditions, assuming instantaneous seizure of the impeller, the pump shaft fails in torsion just below the coupling to the motor, disengaging the flywheel and motor from the shaft. This constitutes a loss of coolant flow in the loop. Following such a postulated seizure, the motor continues to run without any overspeed, and the flywheel maintains its integrity, as it is still supported on a shaft with two bearings.

There are no other credible sources of shaft seizure other than impeller rubs. Any seizure of the pump bearing is precluded by graphite in the bearing. Any seizure in the seals results in a shearing of the anti-rotation pin in the seal ring. The motor has adequate power to continue pump operation even after the above occurrences. Indications of pump malfunction in these conditions are initially by high temperature signals from the bearing water temperature detector, and excessive number 1 seal leakoff indications respectively. Following these signals, pump vibration levels can be checked. Excessive vibration indicates mechanical trouble and the pump can be shut down for investigation.

5.5.1.3.6 Critical Speed

It is considered desirable to operate below first critical speed, and the reactor coolant pumps are designed in accordance with this philosophy. This results in a shaft design which, even under the most severe postulated transient, gives very low values of actual stress.

Both the damped and lateral natural frequencies are determined by establishing a number of shaft sections and applying weights and moments of inertia for each section bearing spring and damping data. The torsional natural frequencies are similarly determined. The lateral and torsional natural frequencies are greater than 120 percent and 110 percent of the running speed.

5.5.1.3.7 Missile Generation

Each component of the pump is analyzed for missile generation. Any fragments of the motor rotor would be contained by the heavy stator. The same conclusion applies to the pump impeller because the small fragments that might be ejected would be contained by the heavy casing.

5.5.1.3.8 Pump Cavitation

The minimum net positive suction head required by the reactor coolant pump at operating conditions is approximately 170 ft. head (approximately 85 psi). In order for the controlled leakage seal to operate correctly, it is necessary to have a minimum differential pressure of approximately 200 psi across the seal and a minimum of 325 psi pressure in the primary loop before the reactor coolant pump may be operated. At this pressure the net positive suction head required is exceeded.

5.5.1.3.9 Pump Overspeed Considerations

For turbine trips, the reactor coolant pumps are maintained energized to prevent any pump overspeed condition.

The RCPs at 120 percent overspeed is evaluated in the thermal-hydraulic design (subsection 4.4.2.7).

5.5.1.3.10 Anti-Reverse Rotation Device

Each of the reactor coolant pumps is provided with an anti-reverse rotation device in the motor. This anti-reverse mechanism consists of multiple pawls mounted on the outside diameter of the flywheel, a serrated ratchet plate mounted on the oilpot, a spring return for the ratchet plate, and three shock absorbers.

After the motor has come to a stop, one pawl engages the ratchet plate and, as the motor tends to rotate in the opposite direction, the ratchet plate also rotates until stopped by the shock absorbers. The rotor remains in this position until the motor is energized again. After the motor has come up to speed, the ratchet plate is returned to its original position by the spring return.

When the motor is started, the pawls drag over the ratchet plate until the motor reaches approximately 80 revolutions per minute. At this time, centrifugal forces acting on the pawls, are sufficient to lift and hold the pawls in the elevated position until the speed falls below the above value. Considerable shop testing and plant experience with the design of these pawls has shown a high reliability of operation.

5.5.1.3.11 Shaft Seal Leakage

Leakage along the reactor coolant pump shaft is controlled by three shaft seals arranged in series such that reactor coolant leakage to the containment is essentially zero. Charging flow is directed to each reactor coolant pump via a seal water injection filter. The flow splits and a portion enters the Reactor Coolant System and the thermal barrier cooler cavity. The remainder of the flow flows up the pump shaft (cooling the lower bearing) and leaves the pump via the number 1 seal where its pressure is reduced to close to the volume control tank pressure.

Number 1 seal leakoff flow is normally ≥0.2 gpm but may be reduced after seal maintenance provided some flow can be verified. The number 1 seal leakoff from each pump seal assembly is piped to a common manifold and then via a seal water filter through a seal water heat exchanger where the temperature is reduced to about that of the volume control tank. Leakage past the number 1 seal provides a constant pressure on the number 2 seal. A standpipe is provided to assure a backpressure of approximately 7 feet of water on the number 2 seal and warn of excessive number 2 seal leakage. The first outlet from the standpipe has an orifice to permit normal number 2 seal leakage to flow to the reactor coolant drain tank; excessive number 2 leakage results in a rise in the standpipe level, alarm in the MCR, and eventual overflow to the reactor coolant drain tank (RCDT) via a second overflow connection. Leakage from the number 3 seal flows to the containment floor and equipment drain sump.

5.5.1.3.12 Spool Piece

The application of a removable spool piece in the Reactor Coolant Pump shaft serves to facilitate the inspection and maintenance of the pump seal system without breaking any of the fluid, electrical or instrumentation connections to the motor, without removal of the motor, and without affecting the pump motor alignment.

Thus it serves to reduce plant downtime for pump maintenance, and also to reduce personnel radiation exposure due to the reduced time in the proximity of the primary coolant loop. (See Figure 5.5.1-3.)

5.5.1.4 Tests and Inspections

Unit 1 RCP support feet are integral cast with the casing to eliminate a weld region. Unit 2 has 3 RCPs with integrally welded pump feet and one integrally cast.

The design enables disassembly and removal of the pump internals for usual access to the internal surface of the pump casing.

Inservice Inspection is discussed in Subsection 5.2.8.

The reactor coolant pump quality assurance program is given in Table 5.5.1-2.

Electroslag Welding

Reactor coolant pump casings fabricated by electroslag welding were qualified as follows:

1. The electroslag welding procedure employing two and three wire technique was qualified in accordance with the requirements of the ASME B&PV Code Section IX and Code Case 1355 plus supplementary evaluations as requested by WNES-PWRSD. The following test specimens were removed from an 8-inch thick and from a 12-inch thick weldment and successfully tested for both the 2 wire and the 3 wire techniques, respectively. They are:

    a. Two wire electroslag process - 8 inch thick weldment

        i. 6 Transverse Tensile Bars - 750°F post weld stress relief

        ii. 12 Guided Side Bend Test Bars

    b. Three wire electroslag process - 12 inch thick weldment

        i. 6 Transverse Tensile bars - 750°F post weld stress relief

        ii. 17 Guided Side Bend Test Bars

        iii. 21 Charpy Vee Notch Specimens

        iv. Full section macroexamination of weld and heat affected zone

v. Numerous microscopic examinations of specimens removed from the weld and heat affected zone regions

vi. Hardness survey across weld and heat affected zone

c. A separate weld test was made using the 2 wire electroslag technique to evaluate the effects of a stop and restart of welding by this process. This evaluation was performed to establish proper procedures and techniques as such an occurrence was anticipated during production applications due to equipment malfunction, power outages, etc. The following test specimens were removed from an 8 inch thick weldment in the stop-restart-repaired region and successfully tested. They are:

i. 2 Transverse Tensile Bars - as welded

ii. 4 Guided Side Bend Test Bars

iii. Full section macroexamination of weld and heat affected zone

d. All of the weld test blocks in (a), (b), and (c) above were radiographed using a 24 Mev Betatron. The radiographic quality level as defined by ASTM E-94 was between one half of 1 percent and 1 percent. There were no discontinuities evident in any of the electroslag welds.

i. The casting segments were surface conditioned for 100 percent radiographic and penetrant inspection. The radiographic acceptance standards were ASTM E-186 severity level 2 except no category D or E defects were permitted for section thickness up to 4-1/2 inches and ASTM E-280 severity level 2 for section thickness greater than 4-1/2 inches. The penetrant acceptance standards were ASME B&PV Code Section III, paragraph N-627.

ii. The edges of the electroslag weld preparations were machined. These surfaces were penetrant inspected prior to welding. The acceptance standards were ASME B&PV Code Section III, paragraph N-627.

iii. The completed electroslag weld surfaces were ground flush with the casting surface. Then, the electroslag weld and adjacent base material were 100 percent radiographed in accordance with ASME Code Case 13355. Also, the electroslag weld surfaces and adjacent base material were penetrant inspected in accordance with ASME B&PV Code Section III, paragraph N-627.

iv. Weld metal and base metal chemical and physical analyses were determined and certified.

v. Heat treatment furnace charts were recorded and certified.

<u>In-Process Control of Variables</u>

There are many variables that must be controlled in order to maintain desired quality welds. These, together with an explanation of their relative importance are as follows:

Heat Input vs Output

The heat input is determined by the product of volts times current and they are measured by voltmeters and ammeters which are considered accurate, as they are calibrated every 30 days. During any specific weld these meters are constantly monitored by the operators.

The ranges specified are 500-620 amperes and 44-50 volts. The current amperage variation, even though it is less than ASME allows by Code Case 1355, is necessary for several reasons:

1. The thickness of the weld is in most cases the reason for changes.

2. The weld gap variation during the weld cycle will also require changes. For example, the procedure qualifications provide for welding thickness from 5 inches to 11 inches with two wires. The current and voltage are varied to accommodate this range.

3. Also, the weld gap is controlled by spacer blocks. These blocks must be removed as the weld progresses. Each time a spacer block is removed there is chance of the weld gap decreasing by as much as 1/4-inch or increasing perhaps as much as 1/4-inch. In either case, a change in current may be necessary.

4. The heat output is controlled by the heat sink of the section thickness and the metered water flow through the water cooled shoes. The nominal temperature of the discharged water is 100°F.

Weld Gap Configuration

As previously mentioned, the weld gap configuration is controlled by 1-1/4 inch spacer blocks. As these blocks are removed, there is the possibility of gap variation. It has been found that a variation from 1-inch to 1-3/4 inches is not detrimental to weld quality as long as the current is adjusted accordingly.

Flux Chemistry

The flux used for welding is Acros BV-1 Vertomax. This is a neutral flux whose chemistry is specified by Acros Corporation. The molten slag is kept at a nominal depth of 1-3/4 inches and may vary in depth by plus or minus 3/8 inch without affecting the weld. This is measured by a stainless steel dipstick.

Weld Cross Section Configuration

It is noted that the higher the current or heat input and the lower the heat output that the dilution of weld metal with base metal is greater, causing a more round barrel-shaped configuration as compared to welding with less heat input and higher heat output. This would cut the amount of dilution to provide a more narrow barrel-shaped configuration. This is also a function of section thicknesses; the thinner the section, the more round the pattern that is produced.

Welder Qualification

Welder qualification in accordance with ASME B&PV Code, Section IX rules (Table Q24.1) is required, using transverse side bend test specimens.

5.5.2 Steam Generator

5.5.2.1 Design Bases

The design data for the replacement steam generators are given in Table 5.5.2-1. The design sustains transient conditions given in Chapter 3. Estimates of radioactivity levels anticipated in the secondary side of the steam generators during normal operation, and the bases for the estimates are given in Chapter 11. Rupture of a steam generator tube is discussed in Chapter 15. Secondary safety relief valves design data is given in Section 10.3.2.1.

The internal moisture separation equipment for the replacement steam generators (RSGs) is designed to ensure that moisture carryover does not exceed 0.10 percent by weight under the following conditions:

1. Steady state operation up to 100 percent of full load steam flow, with water at the normal operating level.

2. Loading or unloading at a rate of five percent of full power steam flow per minute in the range from 15 percent to 100 percent of full load steam flow.

3. A step load change of ten percent of full power in the range from 15 percent to 100 percent full load steam flow.

The steam generator tubesheet complex for the RSGs meets the stress limitations and fatigue criteria specified in the ASME code Section III as well as emergency condition limitations. Codes and materials requirements of the steam generator are given in Section 5.2.

The steam generator design maximizes integrity against hydrodynamic excitation and vibration failure of the tubes for plant life.

The water chemistry in the reactor side is selected to provide the necessary boron content for reactivity control and to minimize corrosion of Reactor Coolant System (RCS) surfaces. The water chemistry of the steam side is consistent with the Steam Generator Owners' Group EPRI report, "PWR Secondary Water Chemistry Guidelines", revision 1, dated June 1984, or subsequent revisions as they are deemed appropriate.

5.5.2.2 Design Description

Original Steam Generator (OSG) (Historical)

The OSG in Figure 5.5.2-1a is a vertical shell and U-tube evaporator with integral moisture separating equipment. The reactor coolant flows through the inverted tubes, entering and leaving through the nozzles located in the hemispherical bottom head of the steam generator. The head is divided into inlet and outlet chambers by a vertical partition plate extending from the head to the tube sheet. Manways are provided for access to both sides of the divided head. Steam is generated on the shell side and travels through swirl vanes and moisture separators to the outlet nozzle at the top of the vessel. The unit is primarily carbon steel. The heat transfer tubes and the divider plate are Inconel and the interior surfaces of the reactor coolant channel heads and nozzles are clad with austenitic stainless steel. The primary side of the tube sheet is weld clad with Inconel.

Feedwater flows directly into the annulus formed by the shell and tube bundle wrapper before entering the boiler section of the steam generator. Subsequently, water-steam mixture flows upward through the tube bundle and into the steam drum section. A set of centrifugal moisture separators, located above the tube bundle, removes most of the entrained water from the steam. Steam dryers are employed to increase the steam quality to a minimum of 99.75 percent (0.25 percent moisture). The moisture separators recirculate the separated water which mixes with feedwater as it passes through the annulus formed by the shell and tube bundle wrapper.

The steam drum has two access openings for inspection and maintenance of the dryers, which can be disassembled and removed through the opening.

Replacement Steam Generator (RSG)

The RSG is similar in design to the original steam generator and is shown in Figure 5.5.2-1b. Steam is generated on the shell side and travels through primary centrifugal moisture separators and secondary hook vane dryers to the outlet nozzle at the top of the vessel. The unit is primarily low alloy steel. The heat transfer tubes and the divider plate are nickel alloy 690 and the interior surfaces of the reactor coolant channel heads and nozzles are clad with stainless steel. The primary side of the tubesheet is clad with nickel alloy weld material.

A set of centrifugal moisture separators, located above the tube bundle, removes most of the entrained water from the steam. Steam dryers are employed to increase the steam quality to a minimum of 99.9 percent (0.10 percent moisture). Water from the separation equipment mixes with feedwater and is recirculated through the evaporator section via the annulus formed by the shell and tube bundle wrapper. The steam drum has two access openings for inspection and maintenance of the steam separation equipment.

5.5.2.3 Design Evaluation

5.5.2.3.1 Forced Convection

The limiting case for heat transfer capability is the "Nominal 100 Percent Design" case. The steam generator effective heat transfer coefficient is based on the coolant condition temperature and flow for this case, and includes a conservative allowance for tube fouling. Adequate tube area is selected to ensure that the full design heat removal rate is achieved.

5.5.2.3.2 Natural Circulation Flow

Upon loss of power to the reactor coolant pumps, coolant flow necessary for core cooling and the removal of residual heat is maintained by natural circulation in the reactor coolant loops. The natural circulation flow with original steam generators was calculated by a digital code for the conditions of equilibrium flow and maximum loop flow impedance. The model used has given results within 15 percent of the measured flow values obtained during natural circulation tests conducted at the Yankee-Rowe plant and has also been confirmed at San Onofre, Connecticut Yankee and the Ginna Nuclear Power Plants. The natural circulation capability of Sequoyah Plant with original steam generators was confirmed through testing at the Sequoyah Plant. An analysis performed by Framatome ANP shows that the natural circulation flow is marginally higher with the replacement steam generators.

Tube and tube sheet stress analyses of the steam generator are given in Section 5.2.

Calculations confirm that the steam generator tube sheet will withstand the loading (which is quasi-static rather than a shock loading) caused by loss of reactor coolant.

5.5.2.3.3 Corrosion

The Replacement Steam Generator Tube material is thermally-treated Ni-Cr-Fe Alloy 690.

5.5.2.3.3.1 Original Steam Generator (Historical)

No significant general corrosion of the Inconel tubing of the original steam generator is expected during the lifetime of the unit. Corrosion tests show a "worst case" rate of 15.0 mg/dm^2 in the 2000 hour test under simulated reactor coolant chemistry conditions. Conversion of this rate to a 40 year plant life gives a corrosion loss of 1.3×10^{-3} inch which is insignificant compared to the minimum wall thickness of the steam generator tubes.

Comparable tests with Inconel-600 exposed to simulated steam generator secondary side water chemistry have shown equally low general corrosion rates. Testing to investigate the susceptibility of heat exchanger construction materials to stress corrosion in caustic and chloride aqueous solutions has indicated that Inconel-600 has excellent resistance to general and pitting type corrosion in severe operation water conditions, hence its selection for use in the steam generator. As discussed above, Inconel-600 is compatible with both the primary and secondary coolant. Laboratory tests have shown the general corrosion rate of Inconel-600 when subjected to both primary and secondary coolant conditions to be insignificant when compared to the nominal tube wall thickness. Many reactor years of successful operation have shown the same low general corrosion rates in operating steam generators.

Operating experience, however, has revealed areas of localized corrosion where the corrosion rates were significantly greater than the low general corrosion rates. Both intergranular corrosion and tube wall thinning were experienced in localized areas, although not at the same location or under the same environmental conditions (water chemistry and sludge composition). These localized areas of corrosion posed no threat to the public health and safety but were of concern because of their possible effect on plant availability.

Therefore, to eliminate these localized areas of corrosion for long term operation of the unit, it was decided that the use of phosphates for steam generator chemistry control would be eliminated. Steam generator corrosion control and secondary side water chemistry is maintained by All Volatile Treatment (AVT) with any combination of hydrazine, ammonia, morpholine, ethanolamine, or other similar organic amines to control at temperature pH in the steam cycle. Treatment programs are compatible and may be overlapped or switched at any time. The availability of compatible treatment programs allows the flexibility to directly compare program performance and utilize plant operating experience as the basis for program selection. In addition, Boric Acid is introduced during heatup and power operations to mitigate the potential for secondary side intergranular attack and denting.

Ammonia/Hydrazine Treatment - The All Volatile Treatment (AVT) control program (ammonia for pH control, hydrazine for oxygen scavenging) will minimize the possibility for recurrence of the tube wall thinning phenomenon, since successful AVT operation requires maintenance of low concentrations of

impurities in the steam generator water. This reduces the potential for formation of highly concentrated solutions in low flow zones. By restriction of the total alkalinity in the steam generator and prohibition of extended operation with free alkalinity, the AVT program will minimize the recurrence of intergranular corrosion in localized areas due to excessive levels of free caustic. Laboratory testing has shown that the Inconel-600 tubing is compatible with the AVT environment.

Organic Amine/Hydrazine Treatment - Organic Amines, in conjunction with hydrazine, have been used successfully at numerous domestic and foreign utilities as a pH control additive. In these applications, organic amines reduce erosion-corrosion in two-phase regions, since they are less volatile than ammonia and provide a higher liquid phase pH in wet steam regions. A benefit expected with organic amines pH control is a reduction in steam generator sludge accumulations, lower than would be expected with just ammonia treatment. Organic amines provide better two-phase pH control, which reduces corrosion product formation, resulting in less corrosion product formation and transport to the steam generators, minimizing sludge accumulation. Experience and testing documented by Westinghouse and EPRI demonstrates morpholine's acceptability as a secondary side water treatment additive (References 5.0 and 6.0). Additionally, Westinghouse has provided a Sequoyah specific evaluation documenting compatibility of morpholine with secondary side materials and its usefulness as a secondary side chemical treatment additive (Reference 5).

Ethanolamine - This chemical favorably distributes itself into the water phase of wet steam cycles, which makes it effective as cycle pH additive. In addition, ethanolamine has a high basic strength at elevated temperatures, which reduces the quantity of the amine required to provide protection. Tests have indicated that ethanolamine can reduce corrosion product transport with little negative effect on polishers (Reference 6).

5.5.2.3.3.2 Secondary Side Chemical Treatment

Dimethylamine - For Unit 1 and Unit 2 RSG's Dimethylamine (DMA) has a high basicity for "at temperature" pH control in the steam cycle, but will not significantly decrease condensate polisher run times. DMA has other characteristics such as anti-scaling and anti-fouling properties, and inhibition of silica formation that makes it desirable as a chemical additive in systems that have no copper based materials. DMA acts as a solvent to copper and copper oxides and will remove them from surfaces and surface deposits so they can be removed by steam generator blowdown.

A comprehensive program of steam generator inspections, including the requirements of Regulatory Guide 1.83, will insure detection and correction of any unanticipated degradation that might occur in the steam generator tubing.

5.5.2.3.4 Flow Induced Vibration

In the design of the Westinghouse RSGs, consideration has been given to the possibility of degradation of tubes due to mechanical or flow induced vibration. This consideration includes detailed analyses of the tube support system as well as an extensive research program with tube vibration model testing.

The primary cause of tube vibration in a steam generator is the propensity for the tubes to extract energy from the secondary fluid flow and convert it into tube motion. The extent of movement experienced by the tubes is dependent on the nature of the flow regime and the approach angle of the flow with regard to the tube span orientation. For vibration assessment purposes, in a typical inverted U-tube steam generator there are four types of secondary flow.

These are:

1. Entrance Cross-Flow - This is either subcooled or saturated liquid (recirculated water mixed with feedwater from the downcomer) cross-flow which occurs at the secondary face of the tubesheet on both the hot side and cold side.

2. Axial Flow - This flow can vary from subcooled to saturated liquid two-phase flow depending on elevation in the steam generator tube bundle. The direction of flow is parallel to the tube axis and this type of flow is the predominate flow in the unit.

3. Two-Phase Cross-Flow (Exit Region) - This type of flow exists for the tubes in the U-bend region of the tube bundle. The effects of this flow are similar to those produced by "entrance cross-flow" except that due to lower density, the energy available to the tubes is not as great.

4. Mixed Flow - This type of flow is a combination of axial flow and cross-flow which could exist in two distinctly different situations.

    a. Oblique Flow Across Straight Tubes - This could occur in regions of flow direction change such as directly above the recirculating entrance region.

    b. Unidirectional Flow Across Curved Tubes - This occurs in the U-bend area of the tubes.

Since the problem of flow induced vibration in the identified regions is of significant concern in the design of shell and tube heat exchangers, Westinghouse has given consideration to the experimental evaluation of the behavior of tube arrays under cross flow. The vibration analysis of the RSG tubes and tube supports is based on the following:

i. Full scale parametric flow test data.

ii. Multi-span dynamic response test data.

iii. Both general and local shell-side flow distribution analysis.

iv. State-of-the-art flow induced vibration analysis techniques, including Appendix N of ASME Code Section III.

The test data described above provided the basis for determining acceptable shell side fluid velocities in the most critical regions of the tube bundle which are the fluid entrance and fluid exit regions. Based on the test data and results from the shell side flow distribution analyses, the design tube support spacing has been shown to have conservative design margins against the onset of fluid elastic instability. The RSG design configuration indicates tube vibration stability ratios (i.e., the effective cross-flow velocity / fluid-elastic critical cross-flow velocity) well below the theoretical allowable of 1.0 and less than or equal to the conservative design requirement of 0.75.

Displacements due to random turbulent excitation of the RSG tubing based on the turbulent buffeting methodology of Appendix N of Section III of the ASME Code are well below the design goal of 10 mils. Reliable methods for calculating tube wear are not available for stable flow vibrations at this level of displacement. Experimental tube vibration data indicate that tube wear is not significant for vibration displacements less than 10 mils.

Additionally, the Sequoyah plant technical specification defines the SG tube repair limit as 40 percent through-wall degradation or 0.0168 inches. Historically and throughout the industry, this repair limit has been determined from bounding values of non-destructive examination sizing uncertainty and degradation growth rate from a structural limit in conjunction with a conservative safety margin. The repair limit is defined such that the performance criteria for structural and leakage integrity will be met at the end of an interval between inspections with this reduction in tube wall thickness.

The structural effects of vibration have been given consideration and the stress limitations for each category in the ASME Code have been met. The tube stresses due to flow induced vibrations were determined to be less than 1.0 kips per square inch, which is less than the lower bound fatigue stress limit. Therefore, there will be no structural or fatigue damage resulting from flow induced vibration in the RSGs.

Finally, it should be noted that successful operational experience with several steam generator designs with similar tube support structures has given confidence in the overall approach to address flow induced vibration in the RSG tube support design.

5.5.2.4 Tests and Inspections

The steam generator quality assurance program during construction is given in Table 5.5.2-2.

Radiographic examination and acceptance standards were in accordance with the requirements of Section III of the ASME code.

Liquid penetrant examination was performed on weld deposited tube sheet cladding, channel head cladding, tube-to-tube sheet weldments, and weld deposit cladding.

Liquid penetrant examination and acceptance standard were in accordance with the requirements of Section III of the ASME code.

Magnetic particle examination was performed on the tube sheet forging, channel head casting, nozzle forgings, and the following weldments:

l. Nozzle to shell

2. Support brackets

3. Instrument connections (primary and secondary)

4. Temporary attachments after removal

5. All accessible pressure containing welds after hydrostatic test.

Magnetic particle examination and acceptance standard were in accordance with requirements of Section III of the ASME code.

An ultrasonic examination was performed on the tube sheet forging, tube sheet cladding, secondary shell and heat plate and nozzle forgings.

The heat transfer tubing was subjected to eddy current examination.

Hydrostatic tests were performed in accordance with Section III of the ASME code. In addition, the heat transfer tubes were subjected to a hydrostatic test pressure prior to installation into the vessel which is not less than 1.25 times the primary side design pressure multiplied by the ratio of the material allowable stress at the testing temperature.

Manways are to provide access to both the primary and secondary sides.

Regulatory Guide 1.83, "Inservice Inspection of Pressurized Water Reactor Steam Generator Tubes," provides recommendations concerning the inspection of tubes, which cover inspection equipment,

baseline inspections, tube selection, sampling and frequency of inspection, methods of recording and required actions based on findings. The minimum requirements for inservice inspection of steam generators are established as part of the technical specifications.

5.5.3 Reactor Coolant Piping

5.5.3.1 Design Bases

The Reactor Coolant System (RCS) piping is designed and fabricated to accommodate the system pressures and temperatures attained under all expected modes of plant operation or anticipated system interactions.

Materials of construction are specified to minimize corrosion/erosion and ensure compatibility with the operating environment.

The piping in the RCS pressure boundary is Safety Class 1. See FSAR Section 3.2 for applicable codes for design, fabrication, inspection, and testing of the RCS pressure boundary.

5.5.3.2 Design Description

Principal design data for the reactor coolant piping material is given in Table 5.2.3-1.

The RCS loop piping is specified in the smallest sizes consistent with system requirements. In general, high fluid velocities are used to reduce piping sizes. This design philosophy results in the reactor inlet and outlet piping diameters given in Figure 5.1-1. The line between the steam generator and the pump suction is larger to reduce pressure drop and improve flow conditions to the pump suction.

The reactor coolant piping and fittings which made up the loops are austenitic stainless steel. There will be no electroslag welding on these components. All smaller piping which comprise part of the RCS boundary, such as the pressurizer surge line, spray and relief line, loop drains and connecting lines to other systems are also austenitic stainless steel. The nitrogen supply line for the pressurizer relief tank is stainless steel. All joints and connections are welded except for the pressurizer code safety valves, pressurizer relief valves, refueling disconnects, and flow orifice elements, where flange joints are used. Flanges are also used for selected vents, drains, and other lower class connections as shown on drawings.

Thermal sleeves are installed at points in the system where high thermal stresses could develop due to rapid changes in fluid temperature during normal operational transients. These points include:

1. Charging connections at the primary loop from the Chemical and Volume Control System.

2. Return line connections from the Residual Heat Removal System at the reactor coolant loops 1 and 4.

3. Both ends of the pressurizer surge line.

4. Pressurizer spray line connection at the pressurizer.

Thermal sleeves are not provided for the remaining injection connections of the Emergency Core Cooling System since these connections are not in normal use.

All piping connections from auxiliary systems are made above the horizontal centerline of the reactor coolant piping, with the exception of:

1. Residual heat removal pump suction, which is 45° down from the horizontal centerline. This enables the water level in the RCS to be lowered in the reactor coolant pipe (midloop operation) while continuing to operate the Residual Heat Removal System.

2. Loop drain lines and the connection for temporary level measurement of water in the RCS during refueling and maintenance operation.

3. The differential pressure taps for flow measurement are downstream of the steam generators on the first 90° elbow. The tap arrangement is discussed in the instrumentation section of this description.

4. Fast response resistance temperature detector thermowells on the RCS hot legs and the reactor vessel level system connections.

Penetrations into the coolant flow path are limited to the following:

1. The pressurizer spray line inlet connections extend into the cold leg piping in the form of a scoop so that the velocity head of the reactor coolant loop flow adds to the spray driving force.

2. The reactor coolant sample system taps protrude into the main stream to obtain a representative sample of the reactor coolant.

3. Fast response resistance temperature detector hot leg thermowells are installed in scoops which extend into the reactor coolant pipes.

4. The wide range temperature detectors are located in resistance temperature detector wells that extend into the reactor coolant pipes.

5. Fast response resistance temperature detector thermowells that extend into the cold leg piping.

The Reactor Control and Protection System narrow range temperature detectors are located in separate thermowells in each reactor coolant loop hot and cold leg. Three hot leg scoops extend into the flow path at locations 120-degrees apart in the cross sectional plane of the reactor coolant hot leg. A resistance temperature detector thermowell is installed in each of these hot leg scoops. Two resistance temperature detector thermowells extend directly into the flow path (no scoops) in a cross sectional plane of the cold leg. One thermowell is installed at the top of the cold leg (and another thermowell is installed approximately 45 degrees from the top thermowell.

The RCS piping includes those sections of piping interconnecting the reactor vessel, steam generator, and reactor coolant pump. It also includes the following auxiliary and connecting piping:

1. Charging line and alternate charging line from the isolation valve up to the branch connections on the reactor coolant loop.

2. Letdown line from the branch connection on the reactor coolant loop to the isolation valve.

3. Pressurizer spray lines from the reactor coolant cold legs to the spray nozzle on the pressurizer vessel.

4. Residual heat removal lines to or from the reactor coolant loops up to the designated isolation or check valve.

5. Safety injection lines from the designated isolation or check valve to the reactor coolant loops.

6. Accumulator lines from the designated isolation or check valve to the reactor coolant loops.

7. Loop fill, loop drain, sample, and instrument lines from the designated isolation valve or 3/8" restrictive orifice to the reactor coolant loops and pressurizer.

8. Pressurizer surge line from one reactor coolant loop hot leg to the pressurizer vessel inlet nozzle.

9. Resistance temperature detector scoop element, pressurizer spray scoop, sample connection with scoop, reactor coolant temperature element installation boss, and the temperature element well itself.

10. All branch connection nozzles attached to reactor coolant loops.

11. Pressure relief lines from nozzles on top of the pressurizer vessel up to and through the power-operated pressurizer relief valves and pressurizer safety valves.

12. Seal injection water and labyrinth differential pressure lines from the reactor coolant pump to the designated isolation or check valve.

13. Excess letdown line from the branch connection on the reactor coolant loop to the 3/8" I.D. flow restrictor.

14. Auxiliary spray line from the isolation valve to the pressurizer spray line header.

Details of the materials of construction and codes used in the fabrication of reactor coolant piping and fittings are discussed in Section 5.2.2.

5.5.3.3 Design Evaluation

Piping load and stress evaluation for normal operating loads, seismic loads, blowdown loads, and combined normal, blowdown and seismic loads is discussed in Section 5.2.2.

5.5.3.3.1 Material Corrosion Erosion Evaluation

The water chemistry is selected to minimize corrosion. A periodic analysis of the coolant chemical composition is performed to verify that the reactor coolant quality meets the specifications.

An upper limit of about 50 feet per second is specified for internal coolant velocity to avoid the possibility of accelerated erosion. All pressure containing welds out to the second valve or flow restrictor that delineates the reactor coolant pressure boundary are available for examination with removable insulation.

Components with stainless steel will operate satisfactorily under normal plant chemistry conditions in pressurized water reactor systems, because chlorides, fluorides, and particularly oxygen, are controlled to very low levels.

Periodic analysis of the coolant chemical composition is performed to monitor the adherence of the system to desired reactor coolant water quality listed in Table 5.2.3-3. Maintenance of the water quality to minimize corrosion is accomplished using the Chemical and Volume Control System and sampling system which are described in Chapter 9.

5.5.3.3.2 Sensitized Stainless Steel

Sensitized stainless steel is discussed in Subsection 5.2.5.

5.5.3.3.3 Contaminant Control

Contamination of stainless steel and Inconel by copper, low melting temperature alloys, mercury and lead is prohibited. Thread lubricants other than colloidal graphite in isopropanol (or Westinghouse PWRSD approved equivalent provided the requirements of TVA internal procedures which control the chemical content of the material used for thread lubricant or sealant are met) shall not be used in plant systems.

Prior to application of thermal insulation on the austenitic stainless steel surfaces for the first time, these surfaces are cleaned and analyzed to a halogen limit of 0.08 mg Cl/dm^2 and 0.08 F/dm^2.

5.5.3.4 Tests and Inspections

The Reactor Coolant System piping quality assurance program is given in Table 5.5.3-1. Inservice inspection is discussed in Section 5.2.8.

5.5.4 Main Steam Line Flow Restrictors

The Main Steam System is not part of the RCS pressure boundary in a PWR. Refer to Sections 6.2.1, 10.3, and 15.4.2 for a discussion on the main steam flow restrictions.

5.5.5 Main Steam Line Isolation System

Since the main steam lines in the Sequoyah Units are not part of the reactor coolant pressure boundary, as in a BWR, the requirement for a discussion of the isolation of the main steam lines in this section of the report is not applicable. For details of the main steam line isolation, see Section 10.3.

5.5.6 Reactor Core Isolation Cooling System

The requirement is for BWR units, and is not applicable to the Sequoyah Units.

5.5.7 Residual Heat Removal System

5.5.7.1 Design Bases

Residual Heat Removal System design parameters are listed in Table 5.5.7-1.

The Residual Heat Removal System is designed to remove heat from the core and reduce the temperature of the Reactor Coolant system (RCS) during the second phase of plant cooldown. During the first phase of cooldown, the temperature of the RCS is reduced by transferring heat from the RCS to the Steam and Power Conversion System through the use of the steam generators.

The Residual Heat Removal System can be placed in operation approximately four hours after reactor shutdown when the temperature and pressure of the RCS are approximately 350°F and 380 psig, respectively. Assuming that two heat exchangers and two pumps are in service and that each heat exchanger is supplied with component cooling water at design flow and temperature, the Residual Heat Removal System is designed to reduce the temperature of the reactor coolant from 350°F to 140°F within 29 hours following Residual Heat Removal System initiation. The heat load handled by the Residual Heat Removal System during the cooldown transient includes residual and decay heat from the core and reactor coolant pump heat. The design heat-load is based on the decay heat fraction that exists at the time of the cooldown.

5.5.7.2 System Description

The Residual Heat Removal System as shown in Figure 5.5.7-1 consists of two residual heat exchangers, two residual heat removal pumps, and the associated piping, valves, and instrumentation necessary for operational control. The inlet line to the Residual Heat Removal System is connected to the hot leg of reactor coolant loop No. 4, while the return lines are connected to the cold legs of each of the reactor coolant loops. These return lines are also the Emergency Core Cooling System low head injection lines. (See Figure 6.3.2-1.)

The RHR pump logic is shown in Figures 5.5.7-2. The Residual Heat Removal System suction line is isolated from the Reactor Coolant System by two motor-operated valves in series and a relief valve, all located inside the containment. The motor-operated valves cannot be opened unless all of the following conditions are satisfied:

1. The RWST suction valve (FCV-63-1) is closed.

2. The containment sump isolation valve in that train is closed (FCV-63-72 or 73).

3. The RCS pressure is less than approximately 380 psig.

4. An administrative lock at valve motor breaker is released (i.e., not less than 350°F) and power is energized.

The RHR pump suction valve is located in the pump room and is interlocked with the respective train containment sump isolation valve. The pump suction valve cannot be opened unless all of the following conditions are satisfied:

1. The containment sump valve in that train is closed (FCV-63-72/73).

2. The ECCS recirculation valve (FCV-63-8) is closed.

3. The RHR spray valve in that train is closed (FCV-72-40 or 41).

The cold leg discharge lines are isolated from the Reactor Coolant System by two check valves located inside the containment and by a normally open motor-operated valve located outside the containment. These valves are shown as part of the Emergency Core Coolant System in Figure 6.3.2-1 and described in Section 6.3.

The environmental qualification of the electric valve operators for these systems that are located within the primary containment is given in Section 3.11.

In the unlikely event that a suction valve to the RCS failed to open, the position indication lights are available in the MCR. An operator can enter the containment and, utilizing the valve handwheel, open the valve manually or the unit can be cooled and maintained at an intermediate hot shutdown temperature utilizing the Steam Generator.

During Residual Heat Removal operation, reactor coolant flows from the RCS to the residual heat removal pumps, through the tube side of the residual heat exchangers, and back to the RCS. The heat is transferred to the component cooling water circulating through the shell side of the residual heat exchangers.

Coincident with operation of the Residual Heat Removal System, a portion of the reactor coolant flow may be diverted from downstream of the residual heat exchangers to the Chemical and Volume Control System low pressure letdown line for cleanup and/or pressure control. By regulating the diverted flow rate and the charging flow, the RCS pressure may be controlled. Pressure regulation is necessary to maintain the pressure range dictated by the fracture prevention criteria requirements of the reactor vessel and by the number 1 seal differential pressure and net positive suction head requirements of the reactor coolant pumps.

The RCS cooldown rate is manually controlled by regulating the reactor coolant flow through the tube side of the residual heat exchangers. A line containing a flow control valve bypasses the residual heat exchangers and is used to control the bypass flow and total return flow to the Reactor Coolant System. Instrumentation is provided to monitor system pressure, temperature and total flow.

The Residual Heat Removal System is also used for filling the refueling cavity before refueling. After refueling operations, water is pumped back to the refueling water storage tank until the water level is brought down to the flange of the reactor vessel. The remainder of the water is removed via a drain connection at the bottom of the refueling canal.

When the Residual Heat Removal System is in operation, the water chemistry is the same as that of the Reactor Coolant. Provision is made for the Sampling System to extract samples downstream of the residual heat exchangers. A local sampling point is also provided on each residual heat removal train between the pump and heat exchanger.

The Residual Heat Removal System functions in conjunction with the Emergency Core Coolant System (ECCS). The use of the Residual Heat Removal System as part of the ECCS is more completely described in Section 6.3.

5.5.7.2.1 Component Description

The materials used to fabricate Residual Heat Removal System components are in accordance with the applicable code requirements. All parts of components in contact with borated water are fabricated or clad with austenitic stainless steel or equivalent corrosion resistant material.

Component codes and classifications are given in Section 3.2 and component parameters are listed in Table 5.5.7-2.

Residual Heat Removal Pumps

Two pumps are installed in the Residual Heat Removal System. The two pumps are vertical, centrifugal units with mechanical seals on the shafts. All pump surfaces in contact with reactor coolant are austenitic stainless steel or equivalent corrosion resistant material. The pumps are sized to deliver reactor coolant flow through the residual heat exchangers to meet the plant cooldown requirements. The use of two pumps assures that cooling capacity is only partially lost should one pump become inoperative.

The residual heat removal pumps have mini-flow lines and valves, which must open, for pump protection during ECCS operation when RCS pressure is above the pump shutoff head. The valves must also open when testing or running the pumps on mini-flow. The mini-flow valves must close when flow increases to ensure sufficient ECCS delivery to the core. The mini-flow valves are opened or closed by their respective flow switches when the pumps are running. The flow switches, which sense differential pressure across an orifice plate at the discharge of the pumps, automatically control the mini-flow valves.

The RHR system has a check valve downstream of each RHR pump miniflow line which functions to preclude the possibility of pump-to-pump interaction when both RHR pumps are operating in the ECCS mode on miniflow. These check valves were the result of the corrective actions for NRC Bulletin 88-04, "Potential Safety-Related Pump Loss."

Pump discharge header pressure is indicated in the MCR. An alarm on high pressure is provided in the MCR.

Residual Heat Exchangers

Two residual heat exchangers are installed in the system. The heat exchangers design is based on heat load and temperature differences between reactor coolant and component cooling water existing twenty hours after reactor shutdown when the temperature difference between the two systems is small.

The installation of two heat exchangers assures that the heat removal capacity of the system is only partially lost if one heat exchanger becomes inoperative.

The residual heat exchangers are of the shell and U-tube type. Reactor coolant circulates through the tubes, while component cooling water circulates through the shell. The tubes are welded to the tube sheet to prevent leakage of reactor coolant.

Residual Heat Removal System Valves

Valves that perform a modulating function are equipped with two sets of packings and an intermediate leakoff connection that discharges to the drain header. Some valves may have their leakoff line connections plugged after packing has been upgraded with graphite packing rings. These new configurations and materials provide improved sealing abilities to reduce the possibilities of stem leakage.

Manual and motor operated valves have backseats to facilitate repacking and to limit stem leakage when the valves are open. Leakage connections are provided where required by valve size and fluid conditions.

The suction isolation valves from the RCS are manually actuated motor operated valves which are closed during normal operation with their power removed to prevent opening. These valves are opened during residual heat removal operations. Operator action is required to close these valves during plant heatup to protect the system from overpressurization. An alarm is provided in the main control room to alert the operator of increasing RHR pressure approaching the RHR system design pressure. Additionally during normal plant operation when the suction valves are closed, if one of the suction isolation valves is moved from the closed position, the alarm will also be activated.

5.5.7.2.2 System Operation

Reactor Startup

Generally, while at cold shutdown, decay heat from the reactor core is being removed by the Residual Heat Removal System. The number of pumps and heat exchangers in service depends upon the heat load at the time.

At initiation of the plant startup, the RCS is completely filled, and the pressurizer heaters are energized. The Residual Heat Removal System is operating and is connected to the Chemical and Volume Control System via the low pressure letdown line to control reactor coolant pressure. During this time, the Residual Heat Removal System acts as an alternate letdown path. The manual valves downstream of the residual heat exchangers leading to the letdown line of the Chemical and Volume Control System are opened. The pressure control valve in the letdown line of the Chemical and Volume Control System is then manually adjusted in the control room to control letdown flow and the system pressure. This letdown flow allows RCP seal injection flow and constant PRZ level.

A pressurizer bubble is formed, then the reactor coolant pumps are started.

Indication of steam bubble formation is provided in the control room by pressurizer level indication. The Residual Heat Removal System is then isolated from the RCS and the system pressure is controlled by normal letdown and the pressurizer spray and pressurizer heaters. RCP operation provides the energy to heat up the RCS.

Power Generation and Hot Standby Operation

During power generation and hot standby operation, the Residual Heat Removal System is not in service but is aligned for operation as part of the ECCS as described in Section 6.3.

Reactor Cooldown

The initial phase of reactor cooldown is accomplished by transferring heat from the RCS to the Steam and Power Conversion System through the use of the steam generators.

When the reactor coolant temperature and pressure are reduced to approximately 350°F and 380 psig, approximately four hours after reactor shutdown, the second phase of cooldown can be started by placing the Residual Heat Removal System in operation.

The rate of heat removal from the reactor coolant is manually controlled by regulating the coolant flow through the residual heat exchangers. By adjusting the control valves downstream of the residual heat exchangers the mixed mean temperature of the return flows is controlled. Coincident with the manual adjustment, the heat exchanger bypass valve is regulated to give the required total flow.

The reactor cooldown rate is limited by RCS equipment cooling rates based on allowable stress limits, as well as the operating temperature limits of the Component Cooling System. As the reactor coolant temperature decreases, the reactor coolant flow through the residual heat exchangers is increased by adjusting the control valve in each heat exchanger's tube-side outlet line.

Pressure control is accomplished by regulating the charging flow rate and the rate of letdown from the Residual Heat Removal System to the Chemical and Volume Control System.

After the reactor coolant pressure is reduced and the temperature is 140°F or lower, the RCS may be opened for refueling.

Reduced Inventory and Midloop Operation

RHR cooling capability continues during cold shutdown and refueling conditions. This includes times when the RCS level is reduced to below the reactor vessel flange and into the midloop region. Procedural controls are provided to establish the proper relationship between RHR flow and reactor vessel level to avoid RHR pump cavitation and loss of RHR cooling.

Refueling

The residual heat removal pumps can be utilized during refueling to pump borated water from the refueling water storage tank to the refueling cavity.

The reactor vessel head is lifted. The refueling water from the RWST is then pumped into the reactor vessel through the normal Residual Heat Removal System return lines and into the refueling cavity through the open reactor vessel.

During refueling, the Residual Heat Removal System is normally maintained in service with the number of pumps and heat exchangers in operation as required by the heat load.

Following refueling, the residual heat removal pumps are used to drain the refueling cavity to the top of the reactor vessel flange by pumping water from the Reactor Coolant System to the refueling water storage tank.

In the event of spurious closure of one of the isolation valves in the Residual Heat Removal suction line, the redundant flow indicators, provided on both of the Residual Heat Removal injection lines to the Reactor Coolant system cold legs, would provide the operator with indication in the main control room of a loss of Residual Heat Removal flow. Also, there will be annunciation provided in the main control room which will alarm in the event of a low-flow condition to either Residual Heat Removal pump when running.

5.5.7.3 Design Evaluation

5.5.7.3.1 System Availability and Reliability

The system is provided with two residual heat removal pumps and two residual heat exchangers arranged in separate flow paths. If one of the two pumps or one of the two heat exchangers is not operable, safe cooldown of the plant is not compromised; however, the time required for cooldown is extended. The two separate flow paths provide redundant capability of meeting the safeguards function of the Residual Heat Removal System.

To assure reliability, the two residual heat removal pumps are connected to two separate electrical buses so that each pump receives power from a different source. If a total loss of off-site power occurs while the system is in service, each bus is automatically transferred to a separate emergency diesel power supply.

5.5.7.3.2 Leakage Provisions and Activity Release

In the event of a Loss Of Coolant Accident (LOCA), fission products may be recirculated through part of the Residual Heat Removal System exterior to the containment. If the residual heat removal pump seal should fail, the water would spill out on the floor in a shielded compartment. Each pump is located in a separate, shielded room. If one of the rooms is flooded, this would have no effect on the other since there are no interconnections.

5.5.7.3.3 Overpressurization Protection

The inlet line to the Residual Heat Removal System is equipped with a pressure relief valve sized to mitigate the heat input and mass input transients as described in Section 5.2.2.4.2 for the purposes of protecting the RHR system given administrative controls as described below.

There are two sets of requirements to ensure that the RHR system is not over pressurized above the code allowable. These restrictions exist when RHR is connected to the RCS and the Rx head is installed. These requirements ensure that the pressure in the RHR system can be maintained as the relief valve setpoint upstream of the RHR pumps. For heat input transients as defined in Section 5.2.2.4.2 there are restrictions on the operation of RCP(s). For $0<T_{RCS}<200$ at least one RCP should be running before temperature reaches 200°F. For $200<T_{RCS}<300$ if all RCPs are lost and one is to be restarted then the pressurizer level must be less than or equal to 65 percent. For $T_{RCS}>300$ if all RCPs are lost they cannot be restarted. For mass input transients there are restrictions on the operation of CCPs and SI pumps: (1) no more than one CCP can be capable of injecting or before placing two CCPs in operation for the purposes of swapping CCPs, the RCS cannot be water solid and (2) no SI pump can be capable of injection. When P_{RHR} exceeds 600 psig downstream of RHR pumps, the RHR pressure must be lowered or the RHR system isolated. There is annunciation of the discharge side of the RHR pumps which indicate high pressure. Upon receipt of this annunciation, the pressure in the RHR system will be monitored to ensure that the condition described is not exceeded.

Each discharge line to the RCS is equipped with a pressure relief valve to relieve the maximum credible back-leakage through the valves separating the Residual Heat Removal System from the RCS. These relief valves are located in the ECCS (see Figure 6.3.2-1). The design of the Residual

Heat Removal System includes two isolation valves in series on the inlet line between the high pressure RCS and the lower pressure Residual Heat Removal System. These valves are motor operated and are closed during normal operation with their actuator power removed to prevent inadvertent opening. When these valves are opened for residual heat removal operation or in the event of isolation valves leaking during normal operation, there is an annunciation provided in the Main Control Room which will alarm in the event of a high pressure on suction side of the RHR pumps. Additionally, this annunciator will also alarm if one of the isolation valves is not closed during normal plant operation. These interlocks are discussed in more detail in subsection 7.6.2.

5.5.7.3.4 Shared Function

The safety function performed by the Residual Heat Removal System is not compromised by its normal function which is normal plant cooldown. The valves associated with the Residual Heat Removal System are normally aligned to allow immediate use of this system in its safeguard mode of operation. The system has been designed in such a manner that two redundant flow circuits are available, assuring the availability of at least one train for safety purposes.

The normal plant cooldown function of the Residual Heat Removal System is accomplished through a suction line arrangement which is independent of any safeguards function. The normal cooldown return lines are arranged in parallel circuits and are utilized also as the low head safeguards injection

lines to the RCS. Utilization of the same return circuits for safeguards as well as for normal cooldown lends assurance to the proper functioning of these lines for safeguards purposes.

5.5.7.3.5 Radiological Considerations

The highest radiation levels experienced by the Residual Heat Removal System are those which would result from a loss of coolant accident. Following a loss of coolant accident, the Residual Heat Removal System is used as a part of the ECCS. During the recirculation phase of emergency core cooling, the Residual Heat Removal System is designed to provide long term cooling by pumping water from the containment sump, cooling it, and returning it to cool the core and containment.

Since, except for some valves and piping, the Residual Heat Removal System is located outside the containment, most of the system is not subjected to the high levels of radioactivity in the containment post-accident environment.

The post accident operation of the Residual Heat Removal System does not involve a radiation hazard for the operators since the system is controlled remotely from the control room. If maintenance of the system is necessary, the portion of system requiring maintenance is isolated by remotely operated valves and/or manual valves with operator or handwheel extensions which allow operation of the valves from a shielded location. The isolated piping may be drained and flushed before maintenance is performed if required.

5.5.7.4 Tests and Inspections

Periodic visual examination and preventive maintenance are conducted during plant operations in accordance with approved plant maintenance program procedures. Inservice Inspection is discussed in subsection 5.2.8.

The instrumentation channels for the residual heat removal pump flow instrumentation devices are calibrated when periodic checks indicate that recalibration is necessary. Due to the role the Residual Heat Removal System has in sharing components with the ECCS, the residual heat removal pumps are tested as a part of the Emergency Core Cooling System testing program (see Subsection 6.3.4).

5.5.8 Reactor Coolant Cleanup System

The Chemical and Volume Control System provides reactor coolant cleanup and is discussed in Section 9.3. The radiological considerations are discussed in Chapter 11.

5.5.9 Main Steam Line and Feedwater Piping

For details of the main steam lines and feedwater piping, see Sections 10.3 and 10.4, respectively.

5.5.10 Pressurizer

5.5.10.1 Design Bases

The general configuration of the pressurizer is shown in Figure 5.5.10-1. The design data of the pressurizer are given in Table 5.5.10-1. Codes and material requirements are provided in Section 5.2.

5.5.10.1.1 Pressurizer Surge Line

The surge line is sized to limit the pressure drop between the Reactor Coolant System (RCS) and the safety valves with design discharge flow from the safety valves. Over pressure of the RCS does not exceed 110 percent of the maximum allowable pressure.

The surge line and the thermal sleeves at each end are designed to withstand the thermal stresses resulting from volume surges which occur during operation.

The pressurizer surge line is qualified for the thermal stratification phenomena which occurs during normal heatup and cooldown of the reactor coolant system as identified in NRC Bulletin 88-11. Qualification is documented in Reference 9.

5.5.10.1.2 Pressurizer

The volume of the pressurizer is equal to, or greater than, the minimum volume of steam, water, or total of the two which satisfies all of the following requirements:

1. The combined saturated water volume and steam expansion volume is sufficient to provide the desired pressure response to programmed system volume changes during credible (Condition II) transients.

2. The water volume is sufficient to prevent the heaters from being uncovered during a step load increase of ten percent of full power.

3. The steam volume is large enough to accommodate the surge resulting from the design step load reduction at full load, with reactor control system, power operated relief valves and steam dump operation, without the water level reaching the high level reactor trip point or high pressurizer pressure reactor trip.

4. The pressurizer does not empty following reactor trip and turbine trip.

5. The safety injection signal is not activated during reactor trip and turbine trip for design transients (Condition II).

5.5.10.2 Design Description

5.5.10.2.1 Pressurizer Surge Line

The pressurizer surge line connects the pressurizer to one reactor hot leg. The line enables continuous coolant volume and pressure adjustments between the RCS and the pressurizer.

5.5.10.2.2 Pressurizer

The pressurizer is a vertical, cylindrical vessel with essentially hemispherical top and bottom heads constructed of carbon steel, with austenitic stainless steel cladding on all surfaces exposed to the reactor coolant.

The surge line nozzle and removable electric heaters are installed in the bottom head. The heaters are removable for maintenance or replacement. A thermal sleeve is provided to minimize stresses in

the surge line nozzle. A screen at the surge line nozzle and baffles in the lower section of the pressurizer prevent insurge of relatively cool water from flowing directly to the steam/water interface, and assists in mixing.

Spray line nozzles and relief and safety valve connections are located in the top head of the vessel. Spray flow is modulated by two automatically controlled air operated valves. The spray valves also can be operated manually from the control room. Manual auxiliary spray is also provided from the CVCS.

A small continuous spray flow through a manual bypass valve around the power operated spray valves provide some mixing of the resident pressurizer liquid with the reactor coolant and to provide chemical mixing and reduce thermal shock to spray piping and nozzle during spray cycles.

During an outsurge from the pressurizer, flashing of water to steam and generation of steam by automatic actuation of the heaters keep the pressure above the low pressurizer pressure reactor trip set point. During insurges from the Reactor Coolant System, which result from normal load transients, the spray system, which is fed from two cold legs, condenses steam in the vessel to prevent the pressurizer pressure from reaching the reactor trip setpoint. Heaters are energized on high water level during insurge to heat the sub-cooled surge water that enters the pressurizer from the reactor coolant loop.

Pressurizer Support

The skirt type support is attached to the lower head and extends for a full 360° around the vessel. The lower part of the skirt terminates in a bolting flange with bolt holes for securing the vessel to its foundation. The skirt type support is provided with ventilation holes around its upper perimeter to assure free convection of ambient air past the heater connector ends for cooling.

Pressurizer Instrumentation

Refer to Chapter 7 for details of the instrumentation associated with pressurizer pressure, level, and temperature.

Spray Line Temperatures

Temperatures in the two spray lines are indicated in the MCR. Alarms are actuated by low spray water temperature which could indicate insufficient flow in the spray lines.

Safety and Relief Valve Discharge Temperatures

Temperatures in the pressurizer safety and relief valve discharge lines are indicated in the MCR. An increase in a discharge line temperature could be an indication of leakage through the associated valve.

5.5.10.3 Design Evaluation

5.5.10.3.1 System Pressure

Whenever a steam bubble is present within the pressurizer, Reactor Coolant System pressure is maintained by the pressurizer. Analyses indicate that proper control of pressure is maintained for the operating conditions.

A safety limit has been set to ensure that the RCS pressure does not exceed the maximum transient value allowed under the ASME code, Section III, and thereby assure continued integrity of the RCS boundary. Evaluation of plant conditions of operation which follow indicate that this safety limit is not reached.

During startup and shutdown, the rate of temperature change is controlled by the operator. When the reactor core is shut down, the maximum heatup rate by pump energy, as controlled by the operator, is limited by the installed pressurizer electrical heating capacity. This heatup rate takes into account the continuous spray flow provided to the pressurizer.

If the pressurizer is filled with water, i.e., near the end of the second phase of plant cooldown and during initial system heatup, RCS pressure is maintained by the Chemical and Volume Control System with letdown from the Residual Heat Removal System.

5.5.10.3.2 Pressurizer Performance

The pressurizer has a minimum internal volume of 1800 cubic feet. The normal operating water volume at full load conditions is 60 percent of the minimum free internal vessel volume. Under part load conditions, the water volume in the vessel is reduced for proportional reductions in plant load to 25 percent of free vessel volume at zero (0) power level. The various plant operating transients are analyzed to assure that the design pressure is not exceeded with the pressurizer design parameters as given in Table 5.5.10-1.

5.5.10.3.3 Pressure Set Points

The RCS design and operating pressure together with the safety, power relief and pressurizer spray valves set points, and the protection system setpoint pressures are listed in Section 5.2, Table 5.2.2-2. The design pressure allows for operating transient pressure changes. The selected design margin considers core thermal lag, coolant transport times and pressure drops, instrumentation and control response characteristics, and system relief valve characteristics.

5.5.10.3.4 Pressurizer Spray

Two separate, automatically controlled spray valves with remote manual overrides are used to control pressurizer spray. In parallel with each spray valve is a manual throttle valve which permits a small continuous flow through both spray lines to reduce thermal stresses and thermal shock when the spray valves open, and to help maintain uniform water chemistry and temperature in the pressurizer. Temperature sensors with low alarms are provided in each spray line to alert the operator to insufficient bypass flow. The layout of the common spray line piping to the pressurizer forms a water seal which prevents steam buildup back to the control valves. The spray rate is selected to prevent the pressurizer pressure from reaching the operating set point of the power relief valves during a step reduction in power level of ten percent of full load. In the case that one of the two automatically controlled spray valves is out of service or inoperable, analysis has determined a ten percent step load decrease transient will not challenge the operating set point of the pressurizer power relief valves.

The pressurizer spray lines and valves are large enough to provide adequate spray using as the driving force the differential pressure between the surge line connection in the hot leg and the spray line connection in the cold leg. The spray line inlet connections extend into the cold leg piping in the

form of a scoop so that the velocity head of the reactor coolant loop flow adds to the spray driving force. The spray lines are connected to loops 1 and 2 to ensure spray flow in the event one RCP is not operating. The line may also be used to assist in equalizing the boron concentration between the reactor coolant loops and the pressurizer.

A flow path from the Chemical and Volume Control System to the pressurizer spray line is also provided. This additional facility provides auxiliary spray to the vapor space of the pressurizer during cooldown if the reactor coolant pumps are not operating. The thermal sleeves on the pressurizer spray connection and the spray piping are designed to withstand the thermal stresses resulting from the introduction of cold spray water.

5.5.10.3.5 Pressurizer Design Analysis

The occurrences for pressurizer design cycle analysis are defined as follows:

1. The temperature in the pressurizer vessel is always, for design purposes, assumed to equal saturation temperature for the existing pressurizer pressure, except in the steam space following a pressure increase. In this case, the temperature of the steam space will exceed the saturation temperature since an isentropic compression is assumed.

   The only exception of the above occurs when the pressurizer is completely filled with liquid during plant startup and cooldown.

2. The temperature shock on the spray nozzle is assumed to equal the temperature of the nozzle minus the cold leg temperature and the temperature shock on the surge nozzle is assumed to equal the pressurizer water space temperature minus the hot leg temperature.

3. Pressurizer spray is assumed to be initiated instantaneously to its design flow rate as soon as the RCS pressure increases above 2275 psia.[1] Spray is assumed to be terminated as soon as the RCS pressure falls below 2275 psia unless otherwise noted.

4. Unless otherwise noted, pressurizer spray is assumed to be initiated once per occurrence of each transient condition. The pressurizer surge nozzle is also assumed to be subject to one temperature transient per transient condition, unless otherwise noted.

5. Each Condition II (Upset Condition) transient results in a reactor trip. At the conclusion of these transients the RCS, including pressurizer, is assumed to return to no-load conditions, with pressure and temperature changes controlled within normal limits.

6. For design purposes, the following assumptions are made with respect to Condition III (Emergency Conditions) and Condition IV (Faulted Conditions) transients.

   a. The plant eventually reaches cold shutdown conditions in the following cases:

---

[1]Spray is assumed to be at maximum rate instantaneously upon exceeding setpoint.

i. Small Loss-of-Coolant Accident (LOCA) - Condition III
ii. Small Steam Break - Condition III
iii. Reactor Coolant Pipe Break (Large LOCA) - Condition IV
iv. Large Steam Line Break - Condition IV

After the transients are completed, cooldown to the cold shutdown conditions is controlled by the operator, maintaining pressure and temperature changes within allowable limits in so far as possible.

b. For the other Conditions III and Condition IV transients, the plant goes to hot shutdown until the condition of the plant is determined. It is then brought either to no-load conditions or to cold shutdown conditions, with pressure and temperature changes controlled within allowable limits.

7. Temperature changes occurring as a result of pressurizer spray are assumed to be instantaneous. Temperature changes occurring on the surge nozzle are also assumed to be instantaneous.

8. Whenever spray is initiated in the pressurizer, the pressurizer water level should be assumed to be at the no-load level. This is conservative, as it maximizes the pressurizer wall area exposed to the spray.

5.5.10.4 Tests and Inspections

The pressurizer is designed and constructed in accordance with ASME Section III.

Peripheral support rings are furnished for the removable insulation modules.

The pressurizer quality assurance program is given in Table 5.5.10-2.

5.5.11 Pressurizer Relief Tank

5.5.11.1 Design Bases

Design data for the pressurizer relief tank are given in Table 5.5.11-1. Codes and materials of the tank are given in Section 5.2.

The tank design is based on the requirement to condense and cool a discharge of pressurizer steam equal to 110 percent of the volume above the full power pressurizer water level setpoint. The tank is not designed to accept a continuous discharge from the pressurizer. The volume of water in the tank is capable of absorbing the heat from the assumed discharge, assuming an initial temperature of 132°F. If the temperature in the tank rises above 132°F during plant operation, the tank can be cooled by spraying in cool water and draining out the warm mixture to the holdup tanks in the Chemical and Volume Control System (CVCS) or to either the floor drain collector tank or tritiated drain collector tank in the Waste Disposal System as required.

5.5.11.2 Design Description

Discharge from smaller relief valves located inside and outside the containment is also piped to the pressurizer relief tank. These smaller relief valves are specific to the Residual Heat Removal,

Safety Injection, Containment Spray and Chemical Volume Control Systems. The tank normally contains water and a predominantly nitrogen atmosphere; however, provision is made to permit the gas in the tank to be periodically analyzed to monitor the concentration of hydrogen and/or oxygen.

By means of its connection to the Waste Processing System, the pressurizer relief tank provides an additional means for removing any noncondensable gases from the Reactor Coolant system which might collect in the pressurizer vessel.

Steam from the pressurizer safety and relief valves is discharged into the pressurizer relief tank through a sparger pipe under the water level. This condenses and cools the steam by mixing it with water that is near ambient temperature. The tank is equipped with an internal spray and a drain which are used to cool the tank following a discharge. A flanged nozzle is provided on the tank for the pressurizer discharge line connection.

5.5.11.2.1 Pressurizer Relief Tank Level

The pressurizer relief tank level is indicated in the MCR with high and low level alarms.

5.5.11.2.2 Pressurizer Relief Tank Water Temperature

The temperature of the water in the pressurizer relief tank is indicated in the MCR, and a high temperature alarm informs the operator that cooling of the tank contents may be required.

5.5.11.3 Design Evaluation

The PRT design is based on the requirement to condense and cool a discharge of pressurizer steam equal to 110 percent of the volume above the full-power pressurizer water level set-point.

The steam volume requirement is approximately the amount of steam that would be discharged from the pressurizer safety valves and relief valves if the plant were to suffer a complete loss of load accompanied by a turbine trip without an immediate reactor trip. A reactor trip is assumed to be initiated slightly later by high pressurizer water level.

The rupture discs on the relief tank have a relief capacity equal to the combined capacity of the pressurizer safety valves. The tank design pressure is twice the calculated pressure resulting from the maximum design safety valve discharge described above. The tank and rupture discs holders are also designed for full vacuum to prevent tank collapse if the contents cool following a discharge without nitrogen being added.

The discharge piping from the safety and relief valves to the relief tank is sufficiently large to prevent backpressure at the safety valves from exceeding 20 percent of the set point pressure at full flow.

5.5.12 Valves

5.5.12.1 Design Bases

As noted in Section 5.2, for all valves out to and including the second valve normally closed or capable of automatic or remote closure, valve closure time is such that for any postulated component failure outside the system boundary, the loss of reactor coolant would not prevent orderly reactor shutdown and cooldown assuming makeup is provided by normal makeup systems. Normal makeup systems are those systems normally used to maintain reactor coolant

inventory under respective conditions of start-up, hot standby, operation or cooldown. For a check valve to qualify as the system boundary, it must be located inside the primary containment boundary.

Construction materials are specified to minimize corrosion/erosion and to ensure compatibility with the environment.

Valves are designed and fabricated in accordance with ANSI B16.5, MSS-SP-66 and ASME Section III, 1968 Edition. Leakage is minimized to the extent practicable by design.

Design parameters for the Reactor Coolant System (RCS) boundary valves are given in Table 5.5.12-1.

5.5.12.2 Design Description

All valves in the RCS which are in contact with the coolant are constructed primarily of stainless steel. Other materials in contact with the coolant, such as for hard surfacing and packing, are special materials.

RCS manual or motor-operated valves, 3 inches or larger, and throttling control valves, regardless of size, may have double-packed stuffing boxes and intermediate leakoff connections. Some valves may have their leakoff line connections plugged after packing has been upgraded with graphite packing rings. These new configurations and materials provide improved sealing abilities to reduce the possibilities of stem leakage.

For valves normally containing radioactive fluid and operating above 212°F, leakoff connections, when used, are piped to a closed collection system so leakage to the atmosphere is essentially zero.

Gate valves at the Engineered Safety Features interface are either wedge design or parallel disc and are essentially straight through. The wedge may be either split or solid. All gate valves have backseat and outside screw and yoke. Globe valves, "T" and "Y" style are full ported with outside screw and yoke construction. Check valves are spring loaded lift piston types for sizes 2 inches and smaller, and swing type for sizes 3 inches and larger. All check valves which contain radioactive fluid are stainless steel or equivalent corrosion resistant material and do not have body penetrations other than the inlet, outlet and bonnet. The check hinge is serviced through the bonnet.

The accumulator check valve is designed with a low pressure drop configuration with all operating parts contained within the body. The disc has limited rotation to provide a change of seating surface and alignment after each valve opening.

The isolation valves between the accumulators and the reactor coolant system boundary are provided with interlocks that meet the intent of IEEE-279 and assure automatic valve opening when reactor coolant system pressure exceeds a specified pressure or on a safety injection signal. These interlocks are discussed in detail in Section 6.3.2.

5.5.12.3 Design Evaluation

Stress analysis of the reactor coolant loop/support system, discussed in Section 3.7 and 5.2, assure acceptable stresses for all valves in the reactor coolant pressure boundary under every anticipated condition.

Reactor coolant chemistry parameters are specified to minimize corrosion. Periodic analysis of coolant chemical composition ensure that the reactor coolant meets these specifications. The upper-limit coolant velocity of about 50 feet per second precludes accelerated corrosion.

Valve leakage is minimized by design features as discussed above.

All Reactor Coolant System boundary valves required to perform a safety function, during the short term recovery from transients or events considered in the respective operating condition categories, will operate in less than or equal to 10 seconds (except for PORV block valves, which have a longer allowed stroke time).

5.5.12.4 Tests and Inspections

Pressure tests, seat leakage tests, and operation tests are performed on reactor coolant boundary valves as required by ASME Section XI, and the SQN Technical Specifications. No further test program is considered necessary.

There are no full-penetration welds within valve body walls. Valves are accessible for disassembly and internal visual inspection.

Inservice inspection is discussed in Subsection 5.2.8.

5.5.13 Safety and Relief Valves

5.5.13.1 Design Bases

The combined capacity of the pressurizer safety valves is designed to accommodate the maximum surge resulting from complete loss of load. This objective is met without reactor trip or any operator action provided that the steam safety valves open as designed when steam pressure reaches the steam-side safety valve setting.

The power-operated pressurizer relief valves operate below the fixed high pressure reactor trip setpoint to limit pressurizer pressure.

5.5.13.2 Design Description

The pressurizer safety valves are totally enclosed pop type. The valves are spring loaded, self activated and with back pressure compensation features.

The 6 inch pipe connecting each pressurizer nozzle to its respective code safety valve, is shaped in the form of a loop seal. Any condensate forming in the loop seal, as a result of normal heat losses, is continuously drained back to the pressurizer. If the pressurizer pressure exceeds the set pressure of the safety valves, they start lifting, and steam discharges during the actuation period.

The relief valves are quick-opening and operated automatically or by remote control. Remotely operated block valves are provided to isolate the power operated relief valves if necessary.

Temperatures in the pressurizer safety and relief valve discharge lines are indicated in the MCR. An increase in a discharge line temperature could be an indication of leakage through the associated valve.

Design parameters for the pressurizer spray control, safety, and power relief valves are given in Table 5.5.13-1.

5.5.13.3 Design Evaluation

The pressurizer safety valves prevent reactor coolant system pressure from exceeding 110 percent of system design pressure, in compliance with the ASME Nuclear Power Plant Components Code, Section III. Design of the safety valves accounts for the pressure drop between the reactor coolant pump discharge and the most remote safety valve. These valves attain full lift prior to reaching 3 percent above set pressure.

The pressurizer power-operated relief valves prevent actuation of the reactor high-pressure trip for all design transients up to and including the design step load decrease with steam dump but without reactor trip. The relief valves also limit undesirable opening of the spring-loaded safety valves.

5.5.13.4 Tests and Inspections

The safety and relief valves are subjected to pressure tests, seat leakage tests, operational tests, and inspections, as required. These tests assure that the valves will operate as designed.

There are no full penetration welds within the valve body walls. Valves are accessible for disassembly and internal visual inspection.

5.5.14 Component Supports

5.5.14.1 Design Bases

Component supports allow virtually unrestricted lateral thermal movement of the loop during normal plant operation and provide restraint to the loops and components during accident conditions. The loading combinations, design stress limits are discussed in Paragraph 5.2.1.2. Material properties are discussed in Subsection 5.2.3. Support design is in accordance with "Specifications for Design, Fabrication and Erection of Structural Steel for Buildings," American Institute of Steel Construction, 1969 Edition. The design maintains the integrity of the reactor coolant system boundary for normal and accident conditions and satisfies the requirements of the piping code. Piping and supports stress analyses are presented in Paragraphs 5.2.1.2 and 5.2.1.3.

5.5.14.2 Description

The support structures are of welded steel construction and are either a linear type or plate and shell type. Vessel skirts and saddles are fabricated from plate and shell elements to accommodate a biaxial stress field. Linear supports are tension and compression struts, beams and columns. Attachments are of integral and non-integral types. Integral attachments are welded, cast or forged to the pressure boundary component by lugs, shoes, rings and skirts. Non-integral attachments are bolted, pinned, or bear on the pressure boundary component. By means of sliding joints, clamps, cradles, saddles, or straps the non-integral supports transmit loads to integral supports.

The supports permit unrestrained thermal growth of the supported systems but restrain vertical, lateral, and rotational movement resulting from seismic and pipe break loadings. This is accomplished using pin ended columns for vertical support and girders, bumper pedestals, hydraulic snubbers, and tie-rods for lateral support.

Shimming and grouting enable adjustment of all support elements during erection to achieve correct fit up and alignment. Final setting of equipment is by shim and grouting at the concrete-steel support interface rather than at the equipment-support interface.

Vessel

Supports for the reactor vessel (Figure 5.5.14-1) are individual aircooled rectangular box structures beneath the vessel nozzles bolted to the primary shield wall concrete. Each box structure consists of a horizontal top plate that receives loads from the reactor vessel shoe, a horizontal bottom plate supported by and transferring loads to the primary shield wall concrete, and connecting vertical plates. The supports are air cooled with a design inlet air temperature of 130°F.

Steam Generator

The lower supports for the steam generator (Figure 5.5.14-2) consists of (1) four vertical pin-ended columns bolted to the bottom of the steam generator support pads, and (2) lateral support girders and pedestals that bear against horizontal bumper blocks bolted to the side of the generator support pads. The upper lateral steam generator support consists of a ring girder around the generator shell connected to hydraulic snubbers on the reactor vessel side and supported by struts on other sides to transmit lateral loads to the building concrete. Loads are transferred from the equipment to the ring girder by means of a number of bumper blocks between the girder and generator shell.

Pump

The reactor coolant pump supports (Figure 5.5.14-3) consist of three pin-ended structural steel columns and three lateral tie bars. A large diameter bolt connects each column and tie rod to a pump support pad.

Pressurizer

The pressurizer (Figure 5.5.14-4) is supported at its base by bolting the flange ring to the supporting concrete slab. In addition upper lateral internal support is provided near the vessel center of gravity by four "V frames" extending horizontally from the compartment walls and bearing against the vessel lugs.

Piping

In original construction of Unit 1 and Unit 2, the reactor coolant loop (RCL) piping contained three pipe thrust blocks attached to the internal concrete structure, functioning as the RCL support system. These were located on the crossover leg pipe, one at each end of the horizontal run (Figure 5.5.14-5), and the other at the vertical run on the steam generator side. As a result of the Unit 1 and Unit 2 steam generator replacements, the RCL piping for both Unit 1 and Unit 2 does not contain any component supports or whip restraints.

5.5.14.3 Evaluation

Detailed evaluation ensures the design adequacy and structural integrity of the RCL and the Primary Equipment Supports System. This detailed evaluation is made by comparing the analytical results with established criteria for acceptability. Structural analyses are performed to demonstrate design adequacy for safety and reliability of the plant in case of a large or small seismic disturbance and/or loss-of-coolant accident conditions. Loads which the system is expected to encounter often during its lifetime (thermal, weight, pressure, and operational basis earthquake) are applied and stresses are compared to allowable values as described in Paragraph 5.2.1.2 and 5.2.1.3.

The safe shutdown earthquake (SSE) and design basis loss-of-coolant accident (LOCA) resulting in a rapid depressurization of the system, are required design conditions for public health and safety.

For SSE and LOCA loadings, the basic criteria ensure that the severity will not be increased, thus maintaining the system for a safe shutdown condition.

The rupture of a reactor coolant loop pipe will not violate the integrity of the unbroken leg of the loop. To ensure the integrity and stability of the RCL support system and a safe shutdown of the system under LOCA and the worst combined (Normal + SSE + LOCA) loadings, the stresses in the unbroken piping to broken loop as well as those in the unbroken loop piping and the supports system are analyzed.

The results of design analysis are provided in Paragraph 5.2.1.2 and 5.2.1.3.

5.5.14.4 Tests and Inspections

The design and fabrication is specified in accordance with the AISC Specifications for the "Design, Fabrication, and Erection of Structural Steel for Buildings," 1969 Edition and applicable portions of the ASME Boiler and Pressure Vessel Code. Welder Qualifications, Welding Procedures, and Inspection of Welded Joints is specified to be in accordance with Section IX of the ASME Code.

5.5.15 Reactor Coolant System Head Vents (RCSHVs)

Design Basis

The basic function of the Reactor Coolant System Head Vent (RCSHV) is to remove noncondensable gases or steam from the reactor vessel head. This system is designed to mitigate a possible condition of inadequate core cooling or impaired natural circulation resulting from the accumulation of noncondensable gases in the Reactor Coolant System (RCS).

This system may also be used as a backup RCS letdown flowpath to prevent filling the pressurizer solid after the reactor is tripped with normal and excess letdown unavailable.

General Description

The RCSHV is designed to remove noncondensable gases or steam from the reactor coolant system via remote manual operation from the control room. The piping is connected above the reactor vessel to one of the capped injection lines previously used for the Upper Head Injection System and is routed to the pressurizer relief tank. The socket welded connection to the cap contains a 3/8 inch orifice which would serve to limit the blowdown from a break in the RCSHV piping to within the capacity of the normal makeup system. The system is designed to vent a volume of noncondensables, such as hydrogen, from the reactor vessel in a reasonable amount of time to preclude increased accumulation.

The RCSHV piping consists of one flow path with redundant valves with identical bypass valves in parallel. The venting operation uses only one of the parallel valves at any one time.

The active portion of the RCSHVs consists of four one-inch solenoid operated valves. The inboard solenoid isolation valves are open/close isolation valves. The outboard throttle valves are remotely operated and capable of regulating the flow rate through the system. With two valves in series in the flow path, the possibility of reactor coolant pressure boundary leakage is minimized. The two parallel isolation valves are powered by two different vital power supplies. The isolation valves are fail

closed, normally closed active valves. Similarly, the throttle valves are powered by two different vital power supplies. They are also fail closed normally closed valves. The isolation and throttle valves are included in the Westinghouse valve operability program which is an acceptable alternative to Regulatory Guide 1.48. These valves will be qualified to IEEE-323-1974, -344-1975, -382-1972.

If one single active failure prevents a venting operation, the redundant parallel valve is available for venting. Similarly the two redundant valves provide a single failure method of closing the vent system. With two valves in series, the failure of any one valve or power supply will not inadvertently open a vent path. Thus, the combination of safety grade train assignments and valve failure modes will not prevent vessel head venting nor venting isolation with any single active failure. Therefore, the single failure capability to vent the reactor vessel head exceeds the requirements to NUREG-0737 since the system is also a backup to the pressurizer vent path (PORVs) and vice-versa. As such, a total failure of the RCSHV to open could be rectified by pressurizer venting. This same reasoning can also be applied to reduction in the capacity of one vent path since the parallel path would be available to increase the venting rate. Therefore, failure or partial opening of one control valve can be supplemented by opening the parallel head vent control valve or by using the pressurizer vent system.

In addition to the preceeding single failure system valve arrangement, all valves are normally closed. This eliminates the possibility of an open flow path due to the spurious movement of one valve. As such, power lockout to any valve is not considered necessary.

In addition to the RCSHV valves being controlled from the control room, the isolation valves also have stem position switches, such that the position may be monitored by status lights. The throttle valve position is monitored by an independent valve position feedback signal.

Therefore, the system provides for venting the reactor vessel head by using only safety grade equipment. From the orifice to the discharge of the throttle valves, all equipment is designed and fabricated in accordance with the ASME, Section III, Class 2 requirements. The remainder of the piping is non-nuclear safety. The RCSHV satisfies applicable requirements and industry standards including the ASME Code classification , safety classification, single-failure criteria, and environmental qualification.

5.5.16 References

1. "The Amplitude of Fluid - Induced Vibration of Cylinders in Axial Flow", M. Paidoussis, AECL-2225.

2. "Flow-Induced Vibration and Noise in Tube-Bank Heat Exchangers Due to van Karmen Streets, Y. Chen, ASME Publication, 1967.

3. "Survey of Nuclear Reactor System Primary Circuit Heat Exchangers," H. Nelms, C. Segaser, ORNL-4399.

4. "Fluidelastic Vibration of Tube Arrays excited by Crossflow," H. J. Connors, Jr., Proceedings of Symposim on Flow Induced Vibration in Heat Exchangers, ASME Winter Annual Meeting, New York, Dec. 1970.

5. Westinghouse Report NSD-MWR-0215, The Morpholine/Boric Acid Application Document for Tennessee Valley Authority, Sequoyah Unit 1 and 2 Nuclear Power Plants.

6. EPRI Report TR-102134, PWR Secondary Water Chemistry Guidelines - Revision 3.

7. EPRI Report NP-5558-SL, Boric Acid Application Guidelines for Intergranular Corrosion, December 1990.

8. EPRI Report TR-103117, Effect of Boric Acid on Intergranular Corrosion in Tube Support Plate Crevices, October 1993.

9. WCAP-12777 “Structural Evaluation of Sequoyah and Watt Bar Nuclear 1 and 2 PRZ Surge Lines, Considering the Effects of Thermal Stratifications” December 1990, and its supplements.

10. Valve Packing Maintenance and Program Practices-Update to 3002005353, EPRI, Palo Alto Ca: 2016. 3002008059.

TABLE 5.5.1-1

REACTOR COOLANT PUMP DESIGN PARAMETERS

Design pressure, psig	2485
Design temperature, °F	650
Capacity 1 pump, gpm	88,500
Developed head, ft.	277*
NPSH required, ft.	170
Suction temperature, °F	545
RPM nameplate rating	1200
Discharge nozzle, ID, in.	27 1/2
Suction nozzle, ID, in.	31
Overall unit height, ft-in	27' - 1.5"
Water volume, ft^3	56
Moment of inertia, $lb\text{-}ft^2$	82,000
Weight, dry, lb	193,500
Motor	
Type	AC induction single speed, air cooled
Power, Hp	6000
Voltage, volts	6600
Insulation class	Class F or better
Phase	3
Frequency, Hertz	60
Starting	
Current, amps	3000
Input (hot reactor coolant), KW	4588
Input (cold reactor coolant), KW	5997
Seal water injection, gpm	8
Seal water return, gpm	3

* Original design requirement for minimum pump performance. See Westinghouse Letter TVA-00-138 for actual pump developed head.

TABLE 5.5.1-2

REACTOR COOLANT PUMP QUALITY ASSURANCE PROGRAM

	RT*	UT*	PT*	MT*
Castings	yes		yes	
Forgings				
1. Main Shaft		yes	yes	
2. Main Studs		yes	yes	
3. Flywheel (Rolled Plate)		yes	yes (for bore)	
Weldments				
1. Circumferential	yes		yes	
2. Instrument Connections			yes	

* RT - Radiographic
UT - Ultrasonic
PT - Dye Penetrant
MT - Magnetic Particle

TABLE 5.5.2-1

STEAM GENERATOR DESIGN DATA*

	Unit 1	Unit 2
Model Number (Westinghouse)	57AG	57AG+
Number of Steam Generators	4	4
Design Pressure, Reactor Coolant/Steam, psig	2485/1085	2485/1085
Reactor Coolant Hydrostatic Test Pressure (tube side-cold), psig	3107	3107
Design temperature, Reactor Coolant/Steam, °F	650/600	650/600
Reactor Coolant Flow, lb/hr	32.9×10^6	32.9×10^6
Total Heat Transfer Surface Area, ft^2	57,000	57,000
Heat Transferred, Btu/hr	2958×10^6	2958×10^6
Steam Conditions at Full Load, Outlet Nozzle:		
Steam Flow, lb/hr	3.78×10^6	3.78×10^6
Steam Temperature, °F	528.5	528.6
Steam Pressure, psia	874	874
Maximum moisture carryover, wt %	0.1	0.1
Feedwater, °F	435.8	436
Overall Height, ft-in.	67-8	67-8
Shell OD, upper/lower, in.	175-3/4 / 135	175-3/4 / 135
Number of U-tubes	4983	4,983
U-tube outer Diameter, in.	0.750	0.750
Tube Wall Thickness, (minimum), in.	0.043	0.043
Number of Manways/ID, in.	4/16	4/16
Number of Handholes/ID, in.	2/6	2/6
Inspection Ports, Quantity / Inside Diameter	6 / 2”	6 / 2”

	Unit 1		Unit 2	
	100% Rated Load	No Load	100% Rated Load	No Load
Reactor Coolant Water Volume, ft^3	1080	1080	1080	1080
Primary Side Fluid Heat Content, Btu	27.79×10^6	27.12×10^6	27.79×10^6	27.12×10^6
Secondary Side Water Volume, ft^3	2098	3290	2064.6	3291
Secondary Side Steam Volume, ft^3	3660	2468	3693.6	2468
Secondary Side Fluid Heat Content, Btu	5.867×10^7	8.848×10^7	5.833×10^7	8.850×10^7

*Quantities are for each steam generator.

Note: Unit 1 RSGs, Model 57AG design data from Westinghouse Letter No. CETV-2002-077, from D. P. Pratt to P. G. Trudel, dated May 17, 2002.

Unit 2 RSG’s, Model 57AG+ design data from Westinghouse Letter No. WTV-S2RSG-09-080, from M. D. Turnmire to P. G. Trudel, date September 21, 2009; Supplemented with AREVA NP Inc. Engineering Information Record 51-9138740 “Sequoyah U2 RSG - UFSAR Update,” and Westinghouse Analysis CN-S2RSG-T601 “Thermal and Hydraulic Design Report.”

TABLE 5.5.2-2

STEAM GENERATOR QUALITY ASSURANCE PROGRAM DURING CONSTRUCTION[1]

	RT*	UT*	PT*	MT*	ET*
Tube Sheet					
1. Forging		yes		yes	
2. Cladding		yes[+]	yes[++]		
Channel Head					
1. Casting	yes			yes	
2. Cladding			yes		
Secondary Shell & Head					
1. Plates		yes			
Tubes	yes			yes	yes
Nozzles (Forgings)		yes		yes	
Weldments					
1. Shell, longitudinal	yes			yes	
2. Shell, circumferential	yes			yes	
3. Cladding (Channel Head-Tube Sheet joint cladding restoration)			yes		
4. Steam and Feedwater Nozzle to shell	yes			yes	
5. Support brackets				yes	
6. Tube to tube sheet			yes		
7. Instrument connections (primary and secondary)				yes	
8. Temporary attachments after removal				yes	
9. After hydrostatic test (all welds and complete channel head - where accessible)				yes	
10. Nozzle safe ends (if forgings)	yes		yes		
11. Nozzle safe ends (if weld deposit)			yes		

* RT - Radiographic
UT - Ultrasonic
PT - Dye Penetrant
MT - Magnetic Particle
ET - Eddy Current

[+] Flat Surfaces Only
[++] Weld Deposit Areas Only
[1] The unit Inservice Inspection Program defines the required NDE during operation.

TABLE 5.5.3-1

REACTOR COOLANT PIPING QUALITY ASSURANCE PROGRAM

	RT*	UT*	PT*
Fittings and Pipe (Castings)	yes		yes
Fittings and Pipe (Forgings)		yes	yes
Weldments			
1. Circumferential	yes		yes
2. Nozzle to runpipe (Except no RT for nozzles less than 4 inches)	yes		yes
3. Instrument connections			yes

* RT - Radiographic
UT - Ultrasonic
PT - Dye Penetrant

TABLE 5.5.7-1

DESIGN BASES FOR RESIDUAL HEAT REMOVAL SYSTEM OPERATIONS

Residual Heat Removal System start up	Approx. 4 hours after Reactor shutdown
Reactor Coolant System initial pressure, psig	~380 (1)
Reactor Coolant System initial temperature, °F	~350
Component cooling water temperature, °F	95 (2)
Cooldown time, hours after initiation of RHRS operation	~29
Reactor Coolant System temperature at end of cooldown, °F	140
Decay heat generation at 20 hours after Reactor shutdown, BTU/hr	77.54×10^6

(1) Accounting for instrument inaccuracies, the setpoint for Reactor Coolant System initial pressure is 380 psig.

(2) The CCS temperature may rise to 120°F during hot standby, hot shutdown, and LOCA-SI and 104.5°F during LOCA-Recirculation mode. The CCS temperature will not exceed 95°F during any other modes of operation (SQN-DC-V-27.6).

Table 5.5.7-2

RESIDUAL HEAT REMOVAL SYSTEM COMPONENT DATA

Residual Heat Removal Pump

Number	2
Design Pressure, psig	600
Design Temperature, °F	400
Design Flow, gpm	3000
Design Head, ft.	375

Residual Heat Exchanger

Number	2
Design Heat Removal Capacity, Btu/hr	37.4×10^6

	Tube-Side	Shell Side
Design Pressure, psig	600	150
Design Temperature, °F	400	200
Design Flow, lb/hr	1.48×10^6	2.48×10^6
Inlet Temperature, °F	137	95*
Outlet Temperature, °F	114	108.8
Material	Austenitic Stainless Steel	Carbon Steel
Fluid	Reactor Coolant	Component Cooling Water

Piping and Valves	Isolation Valves and Piping	Valves and Piping in the Isolated RHRS
Design Pressure, psig	2485	600
Design Temperature, °F	650	400
Material	Austenitic Stainless Steel	Austenitic Stainless Steel

* The CCS temperature may rise to 120°F during hot standby, hot shutdown, and LOCA-SI and 104.5°F during LOCA-Recirculation mode. The CCS temperature will not exceed 95°F during any other modes of operation (SQN-DC-V-27.6).

TABLE 5.5.10-1

PRESSURIZER DESIGN DATA

Design/Operating Pressure, psig	2485/2235
Hydrostatic Test Pressure (cold), psig	3107
Design/Operating Temperature, °F	680/653
Water Volume, Full Power, ft^{3*}	1080
Steam Volume, Full Power, ft^3	720
Surge Line Nozzle Diameter, in.	14
Shell ID, in.	84
Electric Heaters Capacity, kW	1800 (U1), 1730 (U2)
Heatup rate of Pressurizer using Heaters only, °F/hr, startup	40
°F/hr, hot standby	70
Maximum spray rate, gpm	800

*60% of net internal volume (maximum calculated power)

TABLE 5.5.10-2

PRESSURIZER QUALITY ASSURANCE PROGRAM

	RT*	UT*	PT*	MT*	ET*
Heads					
1. Plates	yes			yes	
Cladding			yes		
Shell					
1. Plates		yes		yes	
2. Cladding			yes		
Heaters					
1. Tubing(+)		yes	yes		
2. Centering of element					yes
Nozzle					
Forgings		yes	yes		
Weldments					
1. Shell, longitudinal	yes			yes	
2. Shell, circumferential	yes			yes	
3. Cladding			yes		
4. Nozzle Safe End (if forging)	yes		yes		
5. Nozzle Safe End (if weld deposit)			yes		
6. Instrument Connections			yes		
7. Support Skirt				yes	
8. Temporary Attachments after removal				yes	
9. All welds and plate heads after hydrostatic test				yes	
Final Assembly					
1. All accessible exterior surfaces after hydrostatic test			yes		

* RT - Radiograph
UT - Ultrasonic
PT - Dye Penetrant
MT - Magnetic Particle
ET - Eddy Current
\+ Or a UT and ET

TABLE 5.5.11-1

PRESSURIZER RELIEF TANK DESIGN DATA

Design Pressure, psig	100
Rupture Disc Release Pressure, psig	85 - 100
Design Temperature, °F	340
Total Rupture Disc Relief Capacity, lb/hr at 100 psig	1.6×10^6

TABLE 5.5.12-1

REACTOR COOLANT SYSTEM BOUNDARY VALVE DESIGN PARAMETERS

Other Reactor Coolant Boundary Valves	
Design/Normal Operating pressure, psig	2485/2235
Pre-Operational Plant Hydrotest, psig	3107
Design Temperature, °F	650

TABLE 5.5.13-1

PRESSURIZER VALVES DESIGN PARAMETERS

Pressurizer Spray Control Valves	
Number	2
Design pressure, psig	2485
Design temperature, °F	650
Design flow for valves full open, gpm	800
Pressurizer Safety Valves	
Number	3
Maximum relieving capacity, ASME rated flow, lb/hr (per valve)	420,000
Set pressure, psig	2485 (±1.0%)
Fluid	Saturated steam
Backpressure:	
Normal, psig	3
Maximum during discharge, psig	500
Full lift pressure	<3% above set pressure
Blowdown	<5% below set pressure
RCS pressure at the reactor coolant pump discharge when valve is at full lift (including pressure drop between safety valve and reactor coolant pump)	<110% of set pressure
Pressurizer Power-Operated Relief Valves	
Number	2
Design pressure, psig	2485
Design temperature, °F	680
Relieving capacity at 2350 psig, lb/hr (per valve)	179,000
Fluid	Saturated steam

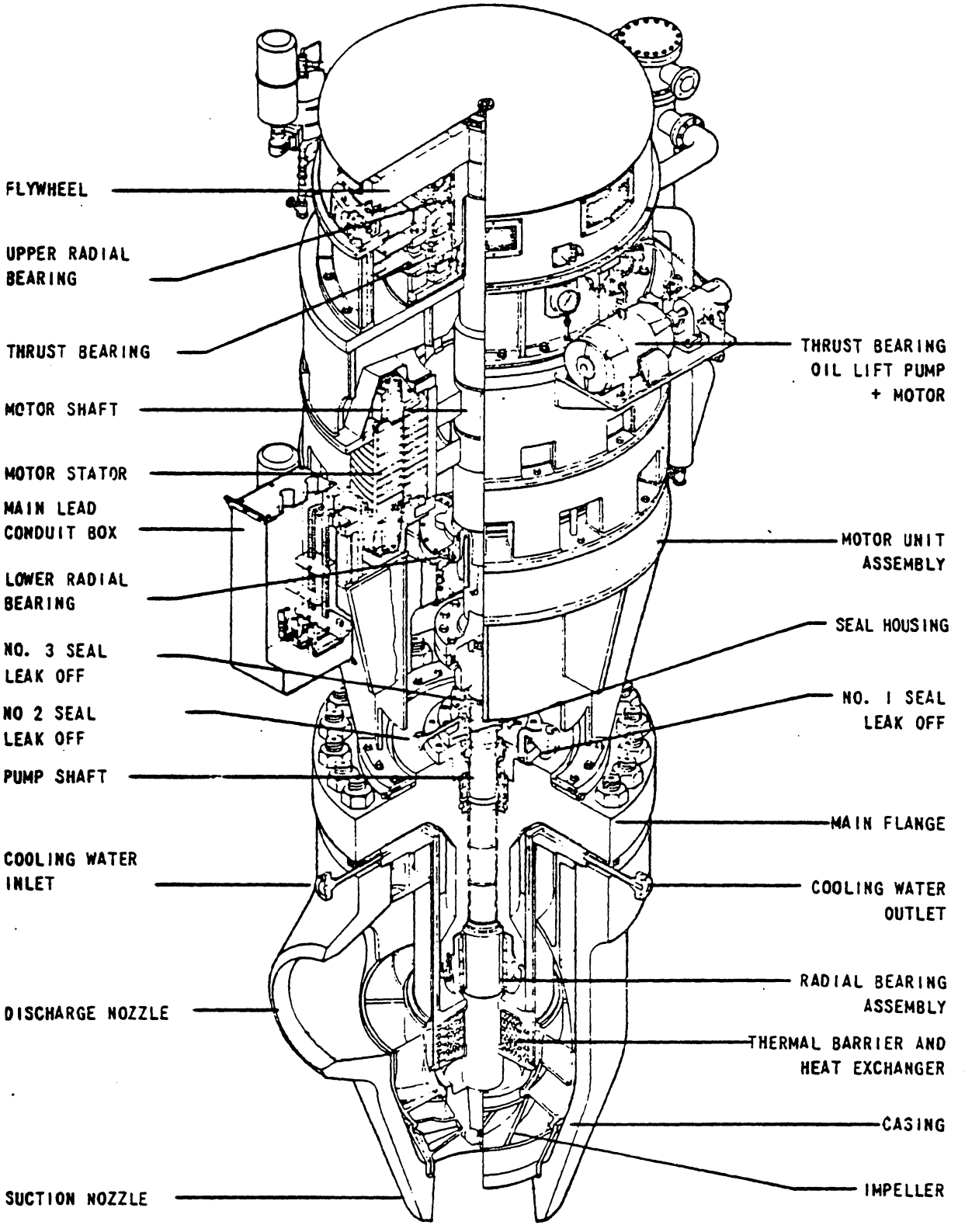

Figure 5.5.1-1 Reactor Coolant Controlled Leakage Pump

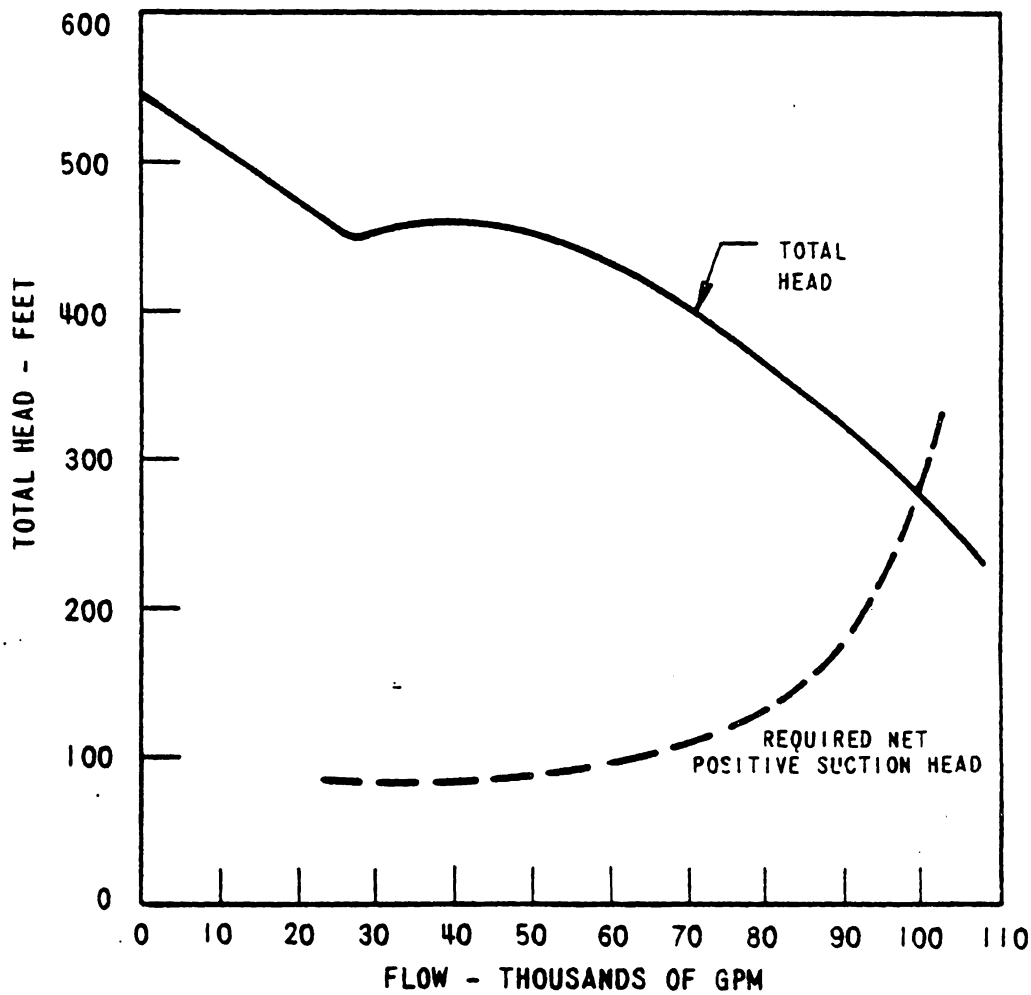

Figure 5.5.1-2 Reactor Coolant Pump Estimated Performance Characteristic

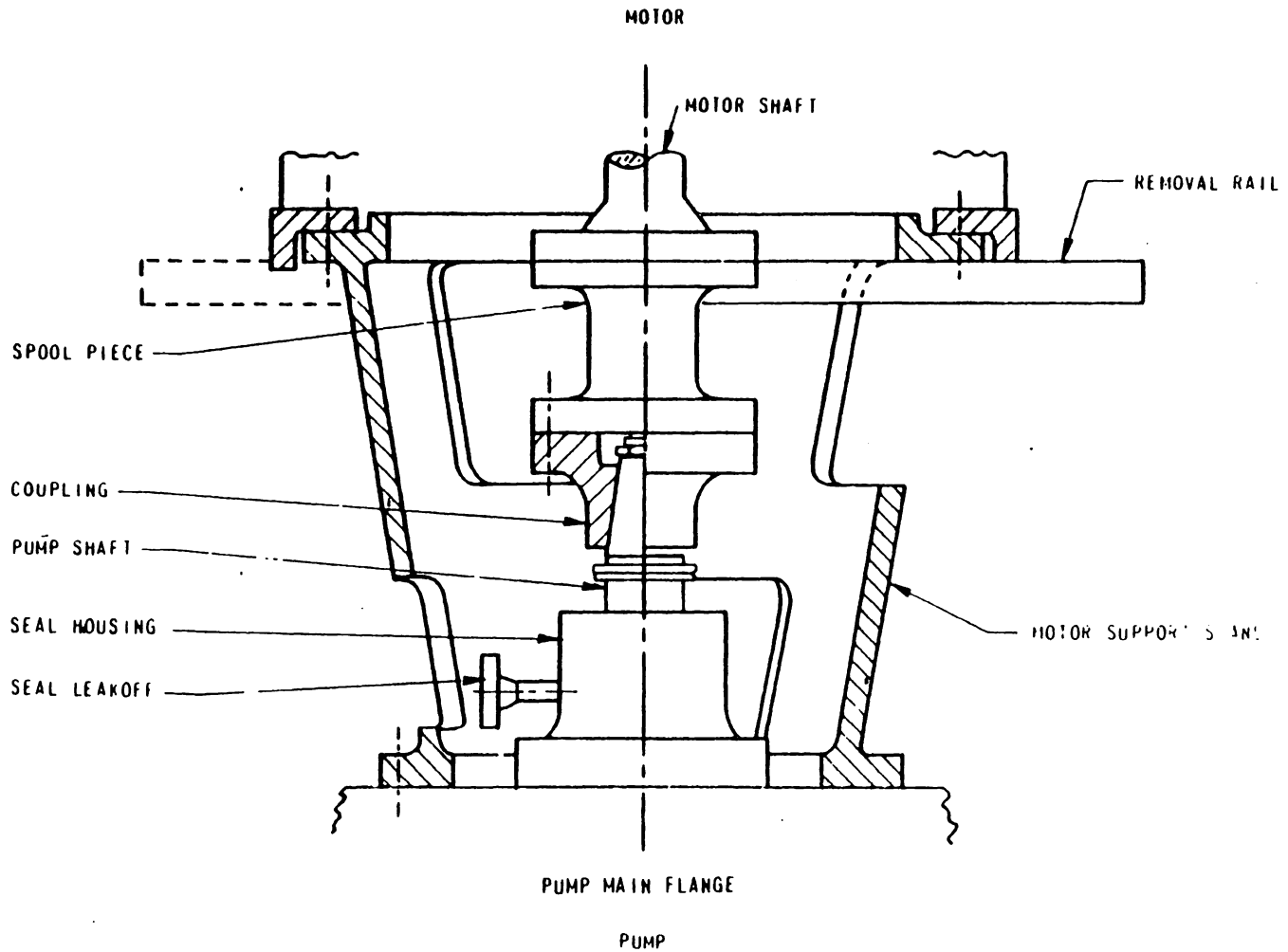

Figure 5.5.1-3 - Reactor Coolant Pump Spool Piece and Motor Support Stand

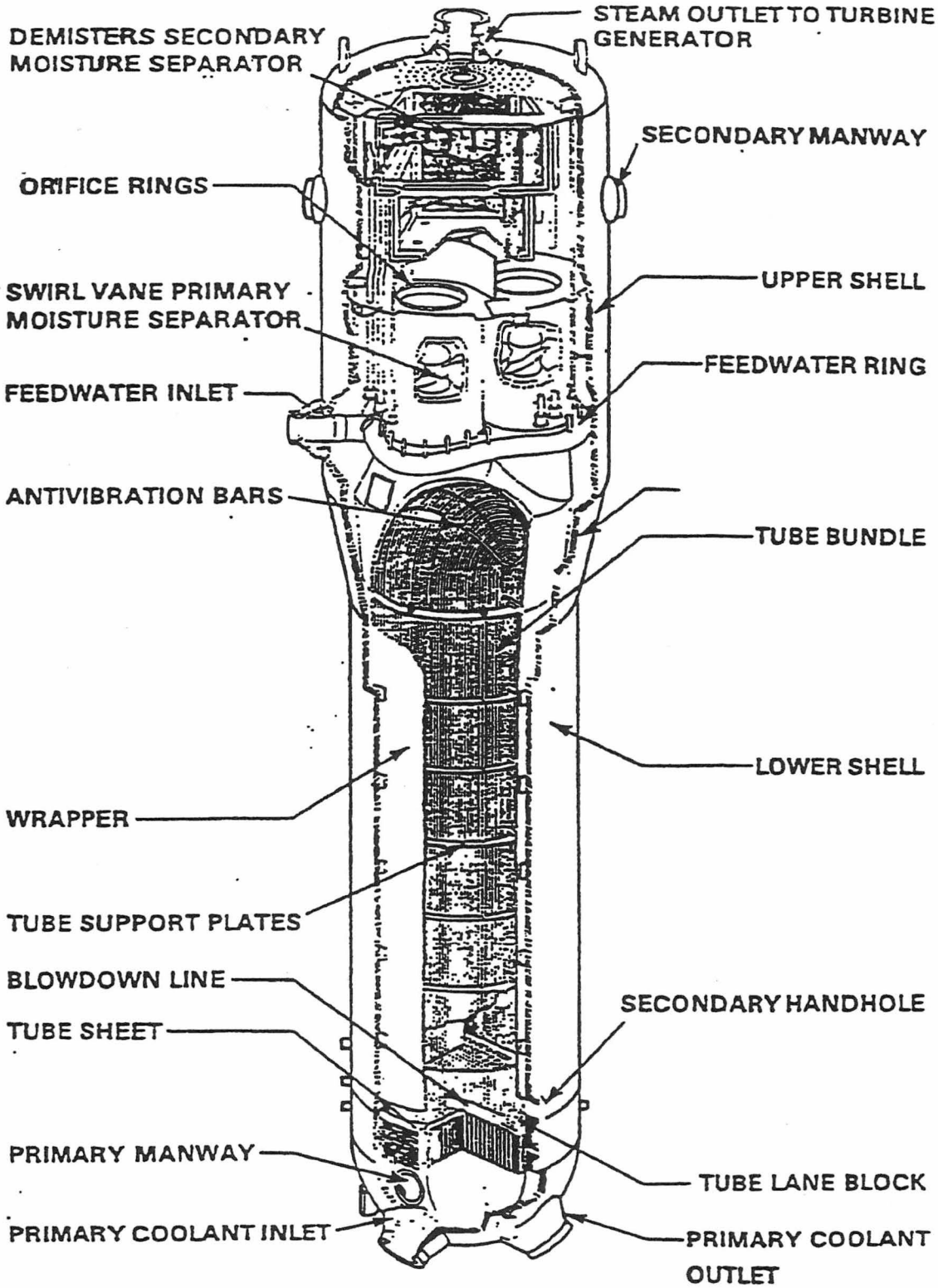

Figure 5.5.2-1a Original Steam Generator (Historical)

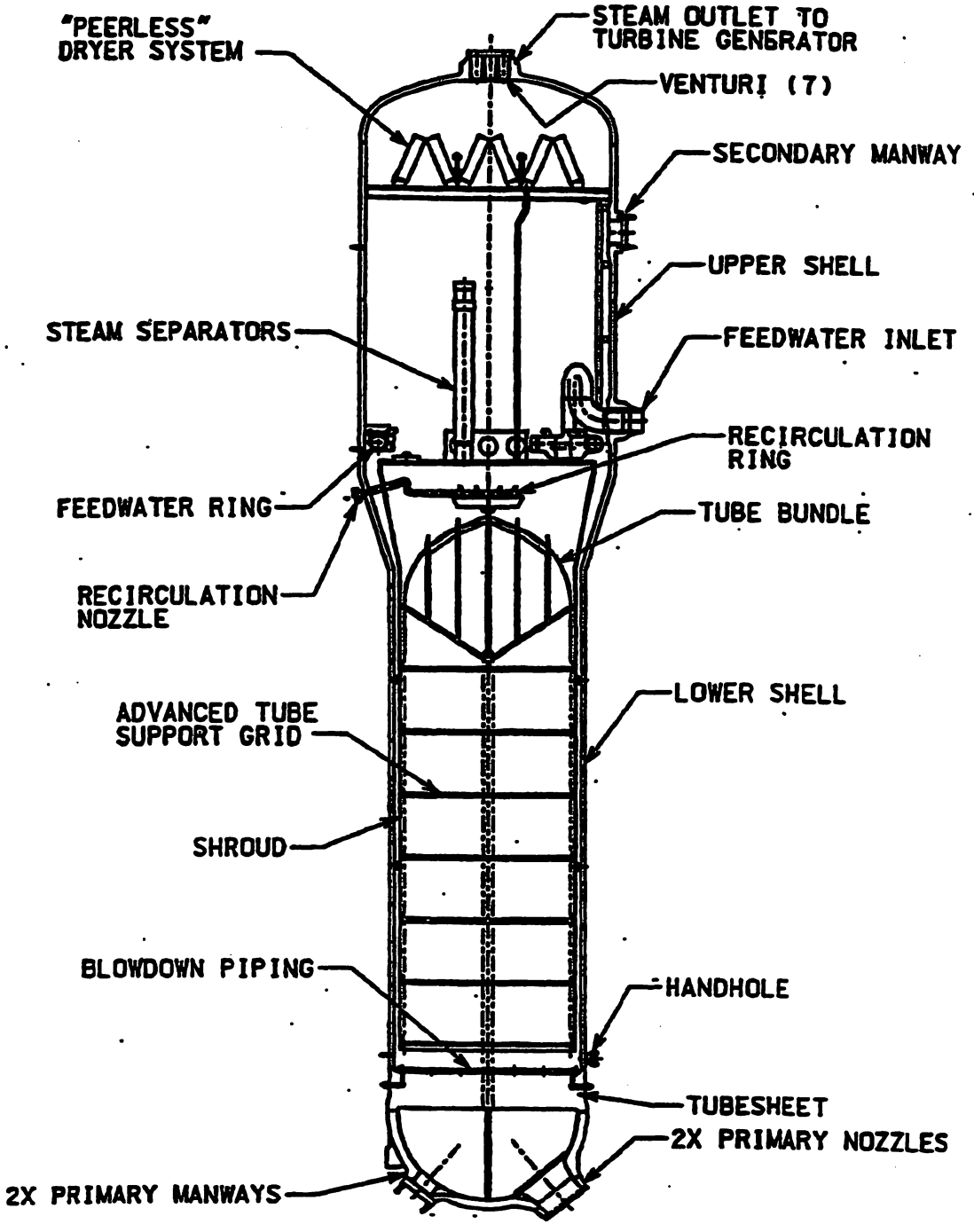

Figure 5.5.2-1b Replacement Steam Generator (Unit 1 and Unit 2)

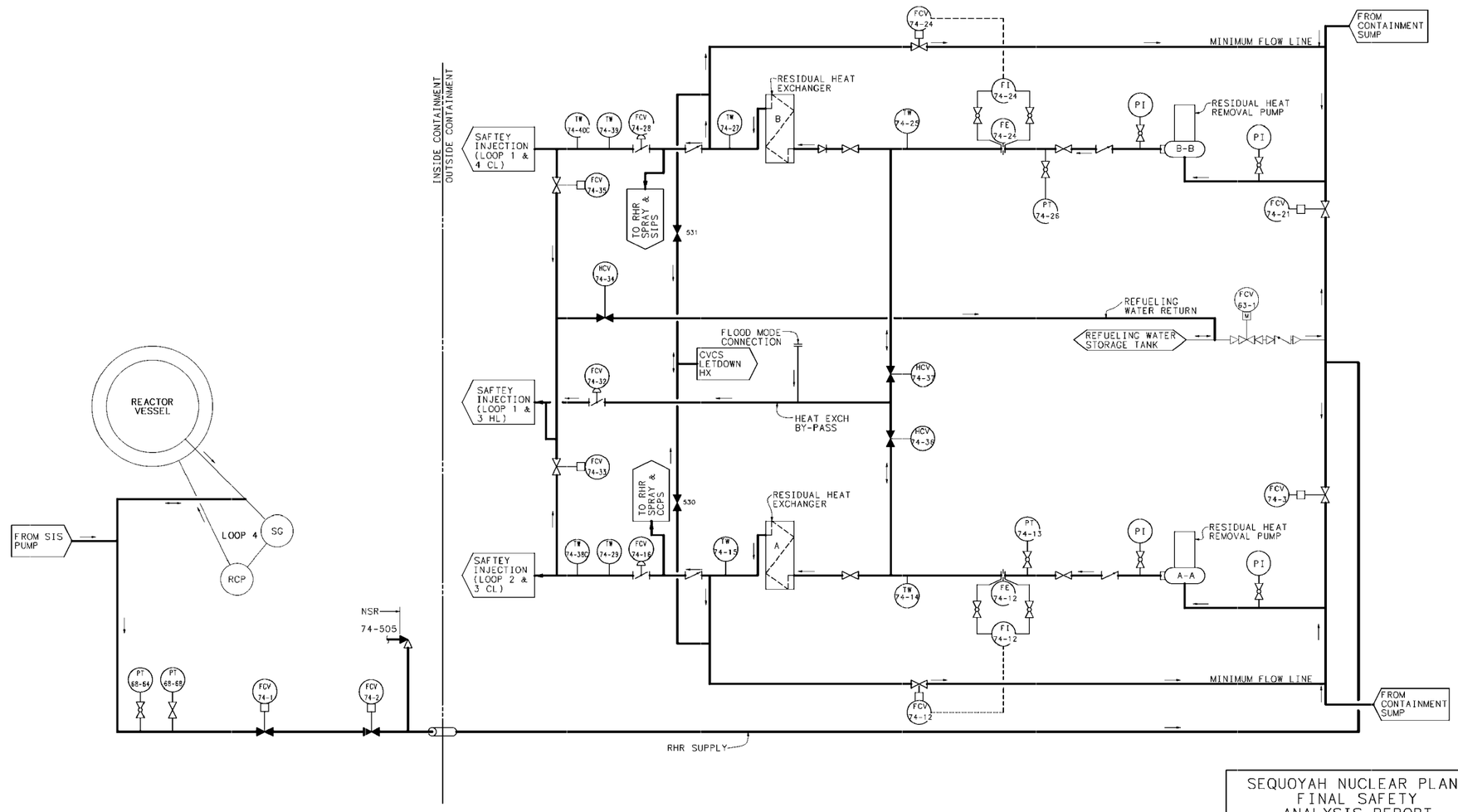

SEQUOYAH NUCLEAR PLANT
FINAL SAFETY
ANALYSIS REPORT

FIGURE 5.5.7-1
RESIDUAL HEAT REMOVAL SYSTEM
(REVISED BY AMMENDMENT 13)

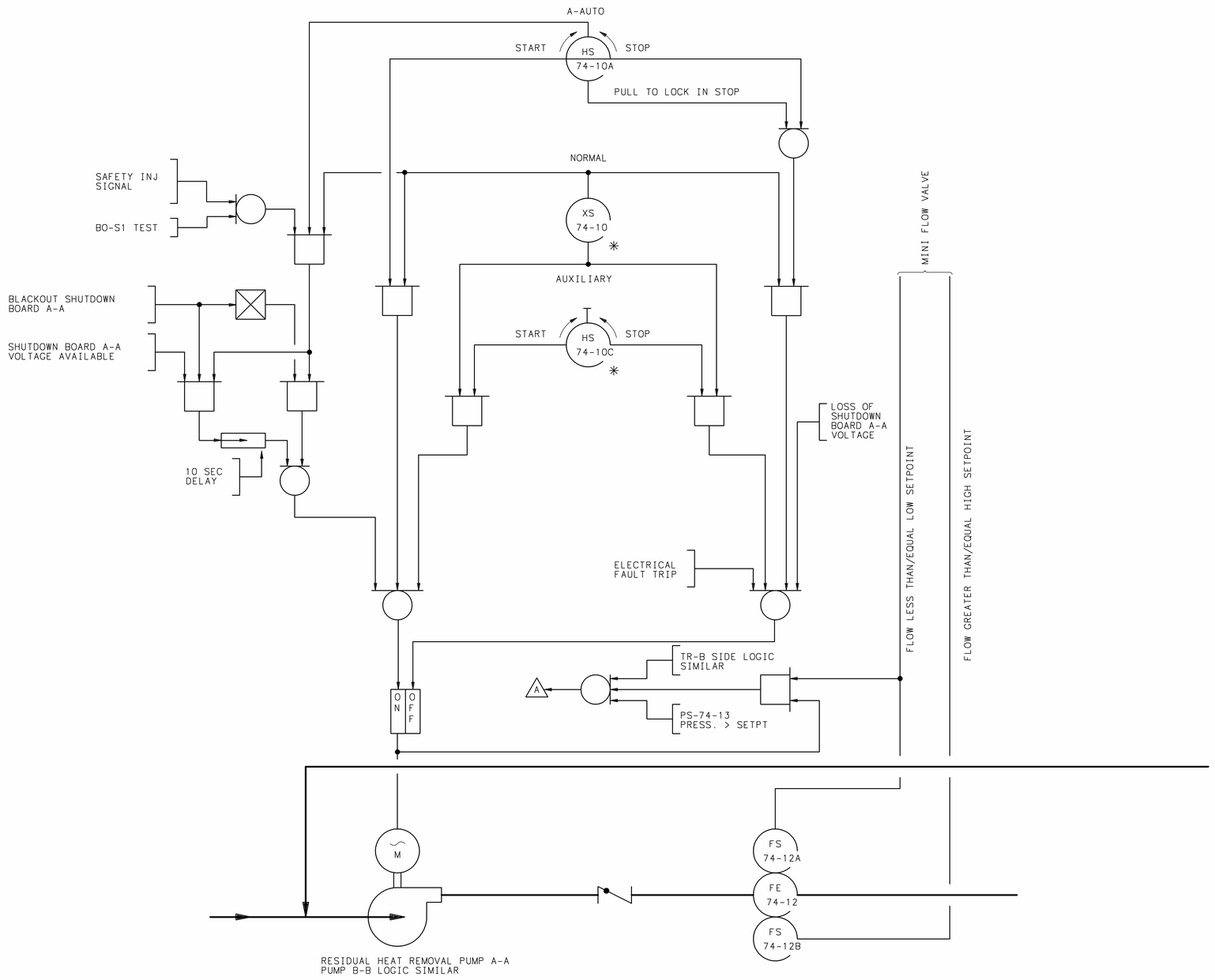

NOTES:
1. LOCATION OF CONTROLS
   ✳ AUXILIARY CONTROL STATION
   ▲ LOCAL
2. LOGIC SHOWN IS TYPICAL FOR UNITS 1 AND 2.

SEQUOYAH NUCLEAR PLANT
FINAL SAFETY
ANALYSIS REPORT

FIGURE 5.5.7-2

RESIDUAL HEAT REMOVAL PUMP LOGIC
(REVISED BY AMENDMENT 22)

CAD MAINTAINED DRAWING

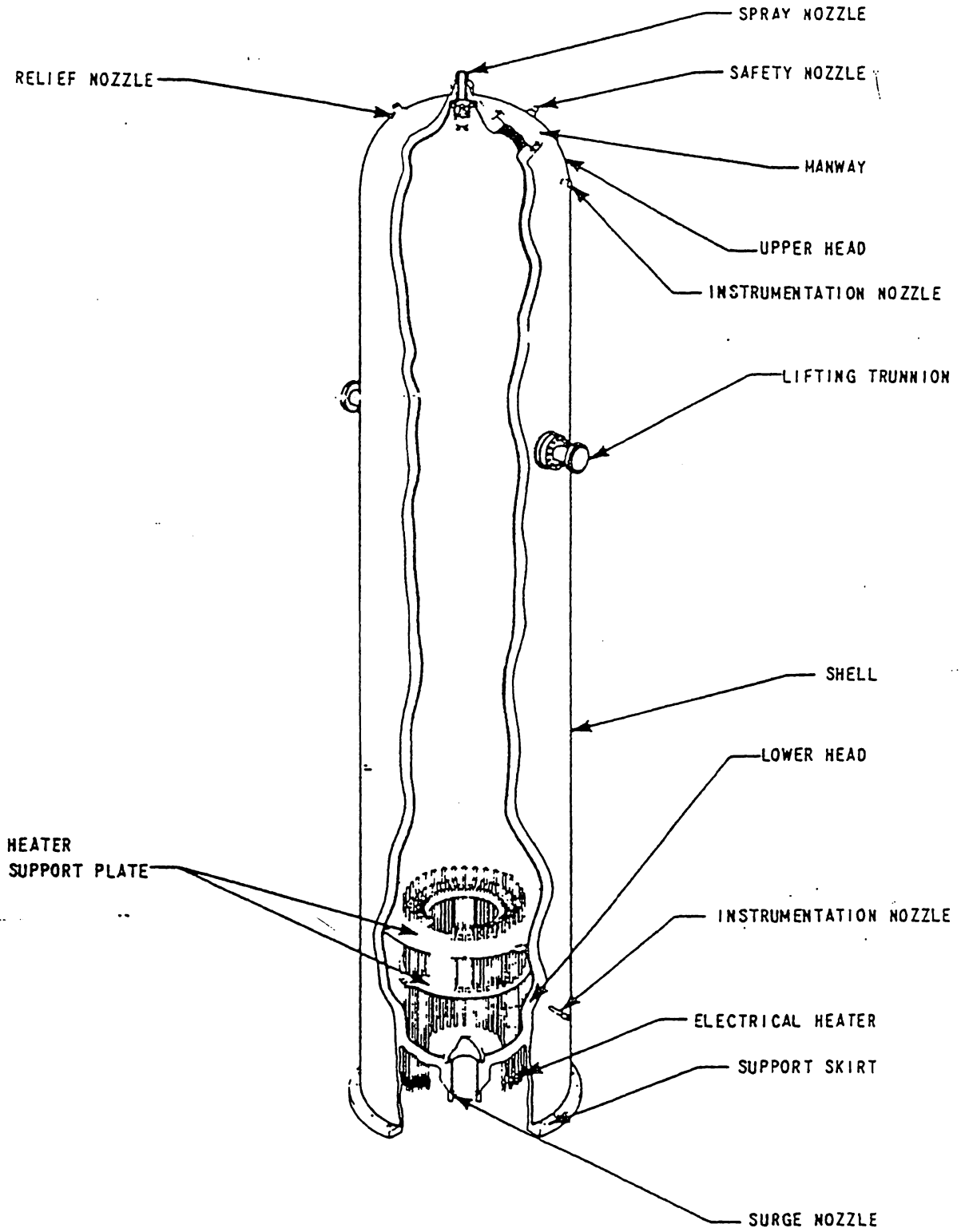

Figure 5.5.10-1 Pressurizer

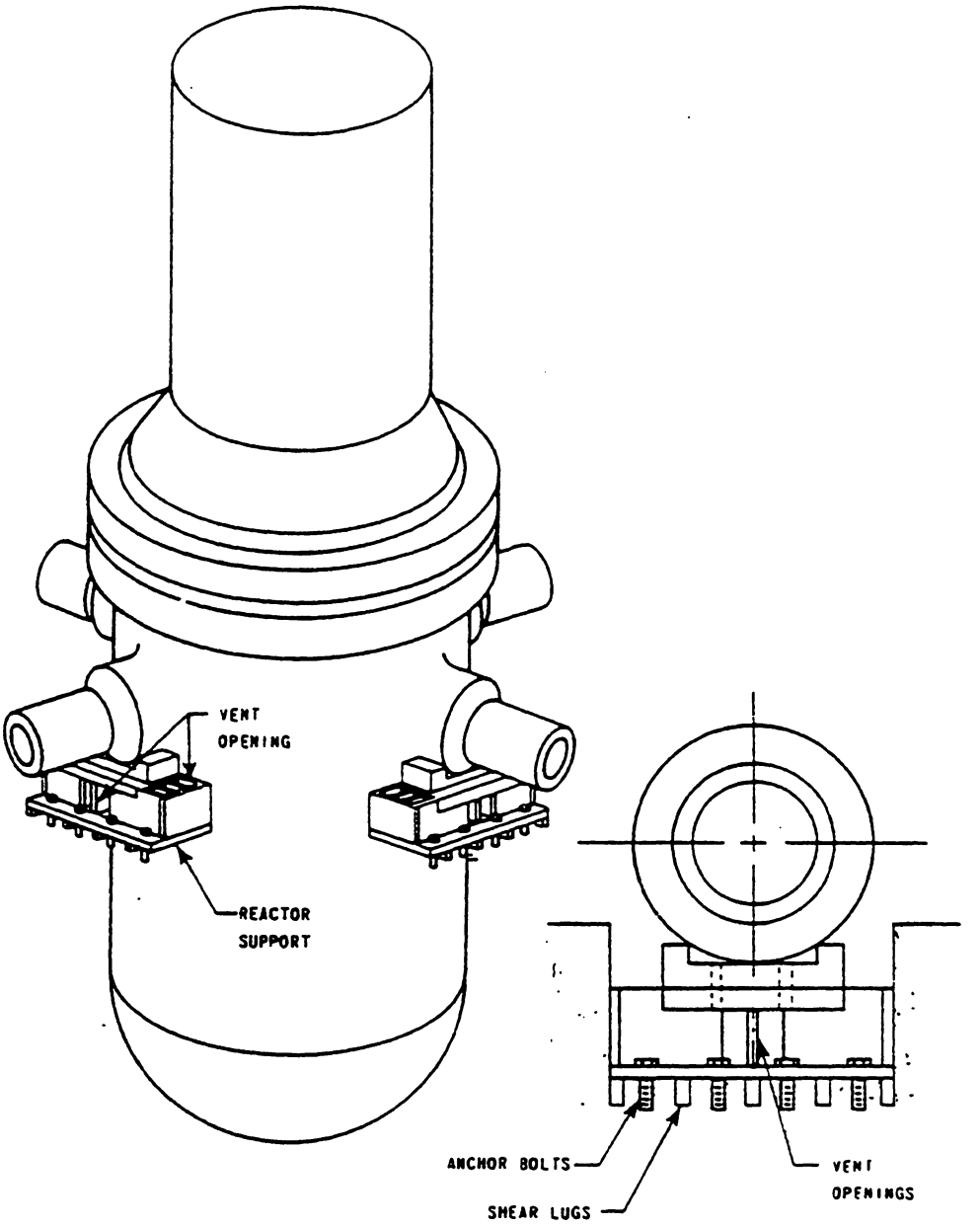

Figure 5.5.14-1 Reactor Vessel Supports

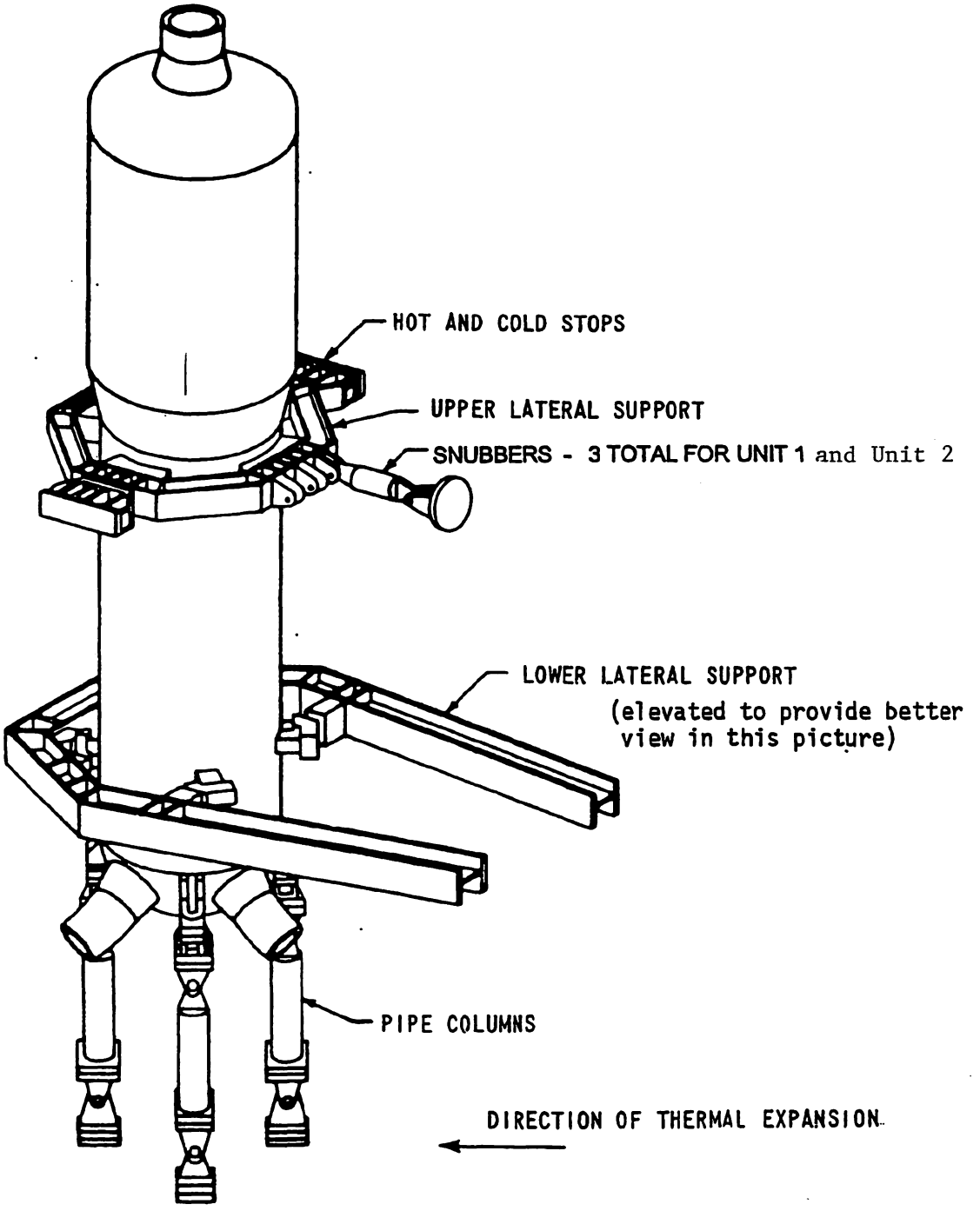

Figure 5.5.14-2 Ice Condenser Steam Generator Supports

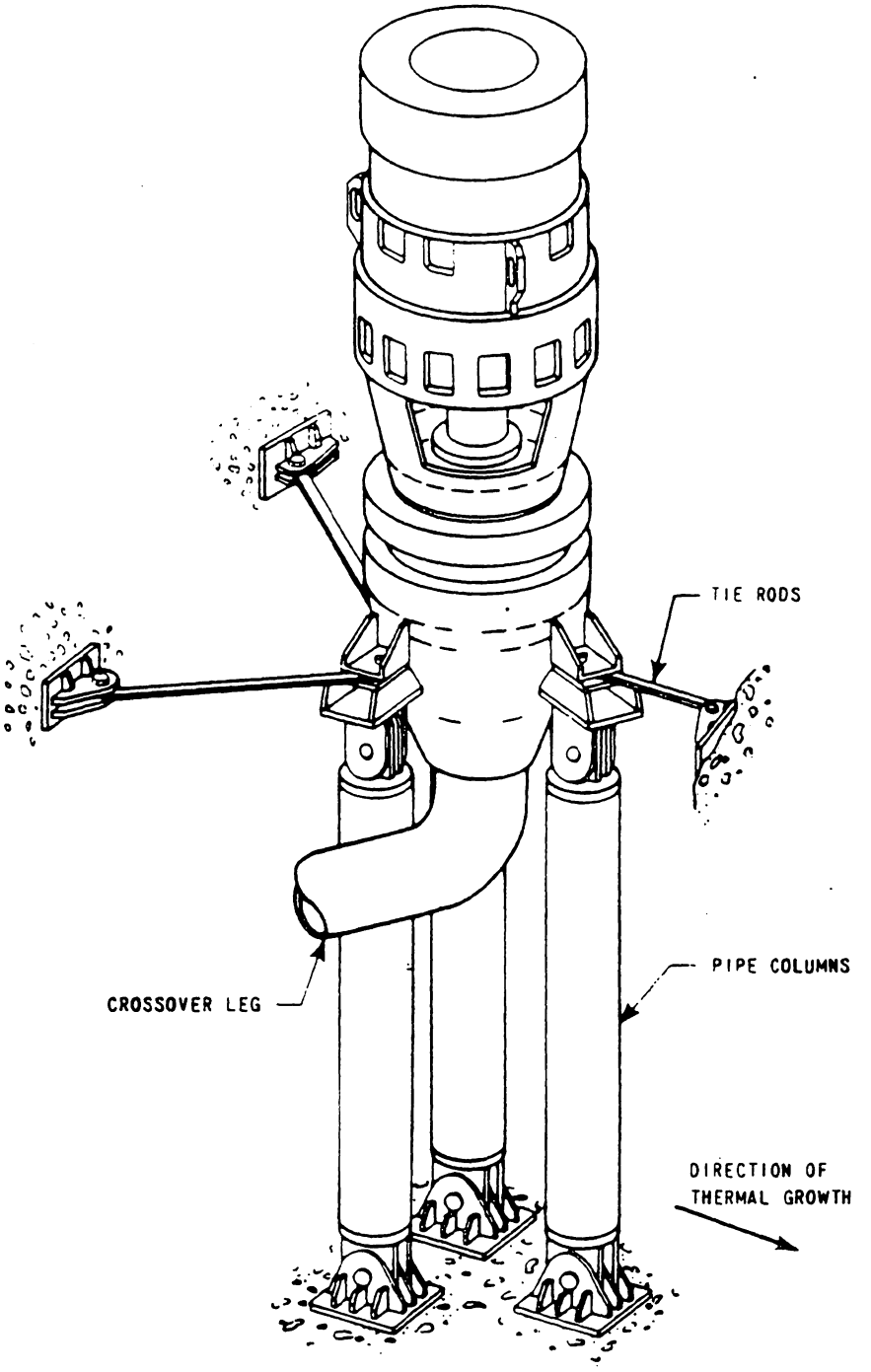

Figure 5.5.14-3 Reactor Coolant Pump Supports

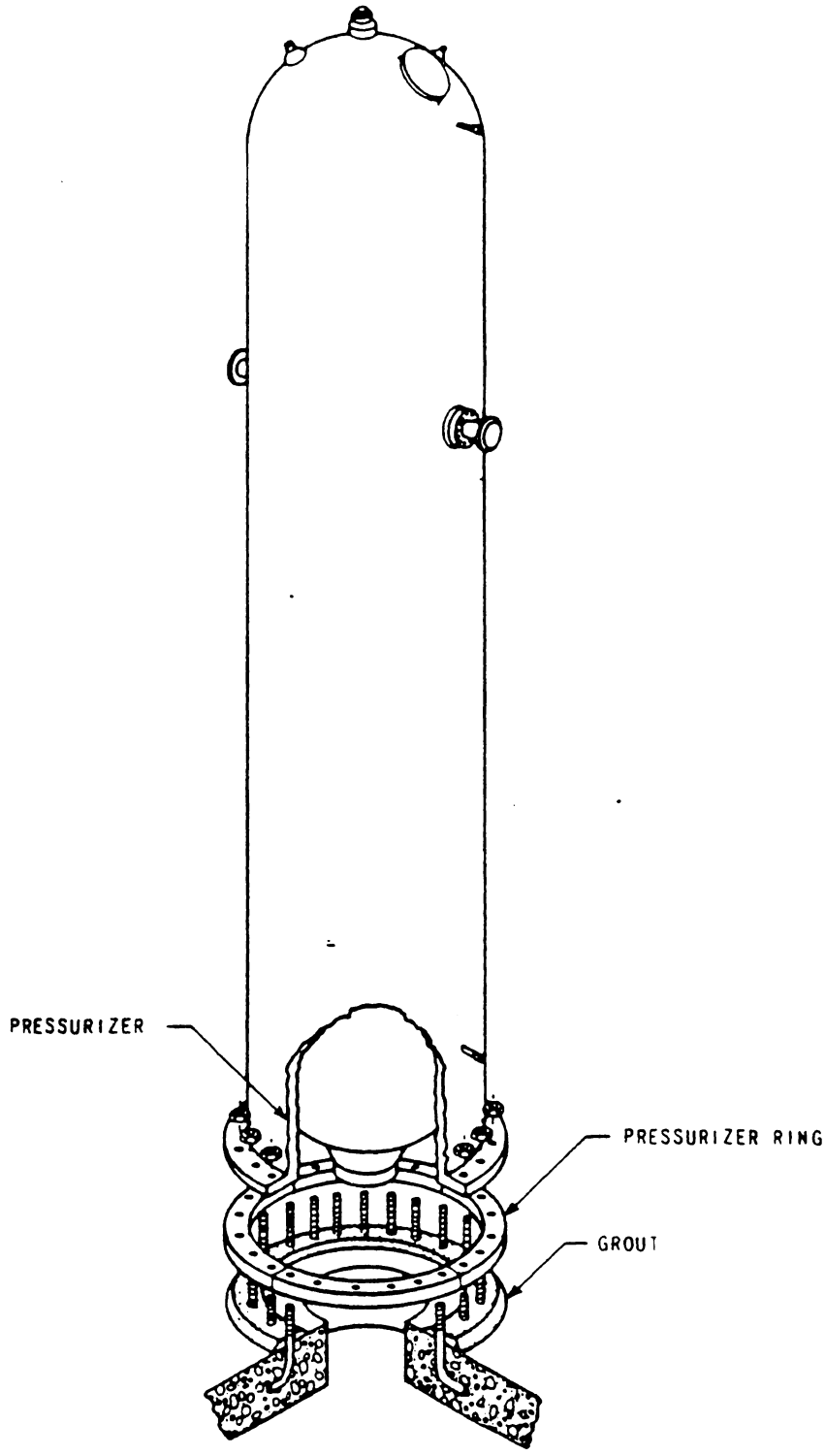

Figure 5.5.14-4 Pressurizer Support

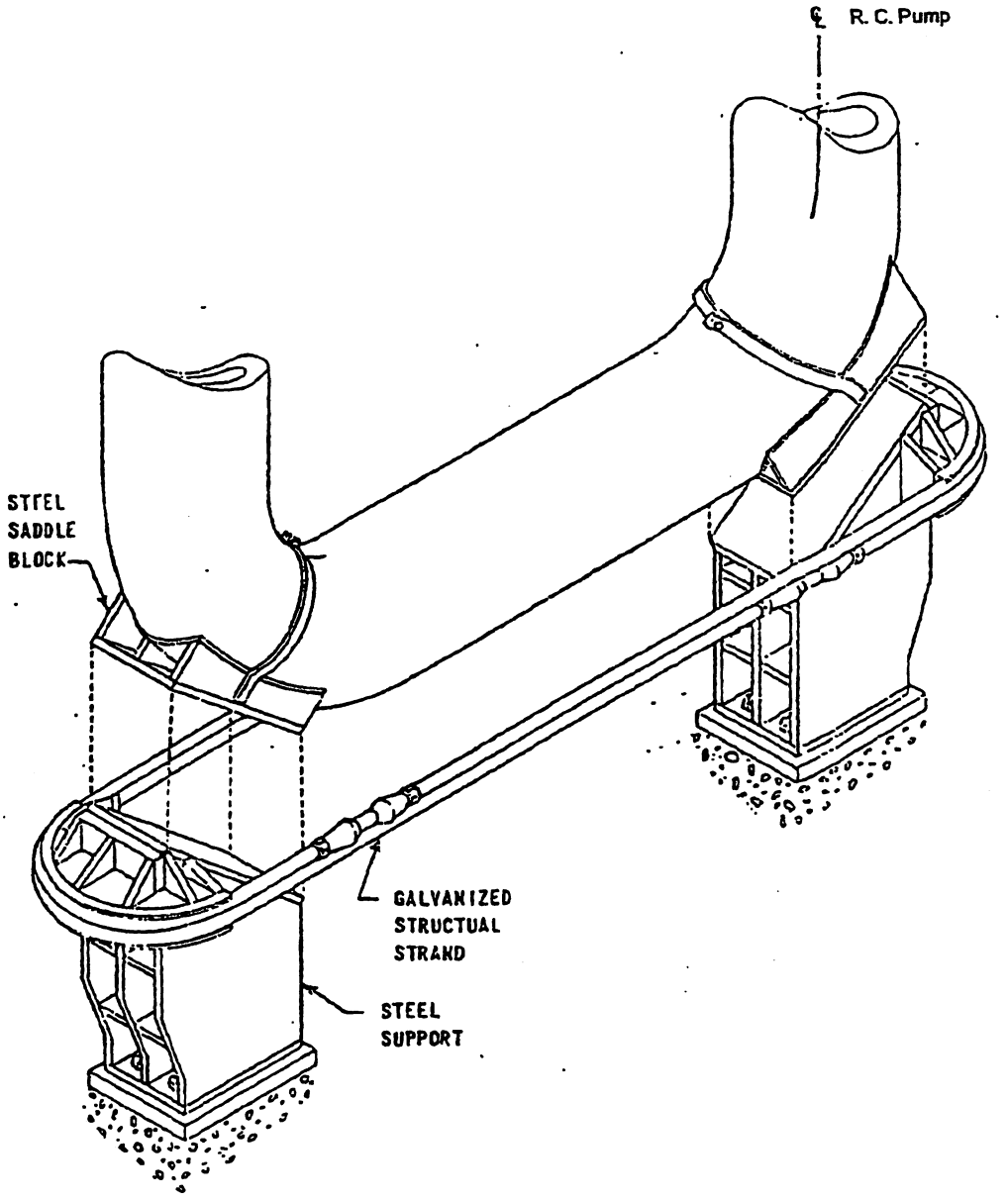

Figure 5.5.14-5 Crossover Leg Restraints (Inactive for Unit 1 and Unit 2)

5.6 INSTRUMENTATION APPLICATION

Process control instrumentation is provided for the pressurizer and RCS loops (including the reactor coolant pump motors). Residual Heat Removal System instrumentation is discussed in sections 6.3 and 7.6. The safety-related display instrumentation for Post Accident Monitoring is discussed in Section 7.5. Instrument locations for the RCS are shown in the Figure 5.1-1. Functional diagrams involving RCS instrument applications are provided in Section 7.1. This instrumentation provides input signals for the Protection System and Control Systems as follows:

1. Provide input to the Reactor Trip System for reactor trips as follows:

    a. Overtemperature ΔT

    b. Overpower ΔT

    c. Low pressurizer pressure

    d. High pressurizer pressure

    e. High pressurizer water level

    f. Low primary coolant flow

    Provide input to the Engineered Safety Features Actuation System (ESFAS) as follows:

    a. Pressurizer low pressure

3. Furnish input signals to non-safety related systems, such as the Plant Control Systems (or the Distributed Control System (DCS)) and surveillance circuits so that:

    a. Reactor coolant average temperature (Tavg) will be maintained within prescribed limits.

    b. Pressurizer level control, using Tavg to program the setpoint.

    c. Pressurizer pressure will be controlled within specified limits.

    d. Steam dump control, using Tavg control, will accommodate sudden loss of generator load.

    e. Information is furnished to the control room operator and at local stations for monitoring.

The following is a functional description of the system instrumentation. Unless otherwise stated, all indicators, recorders and alarm annunciators are located in the main control room.

1. Temperature Measuring Instrumentation

    a. Narrow Range Cold and Hot Leg Temperature (RTDs)

        Separate thermowells (three in each hot leg and two in each cold leg) are provided so that individual temperature signals may be developed for use in the Reactor Control and Protection System. The hot leg temperature for each loop is measured by three fast-response, narrow-range RTDs mounted in thermowells which extend into the flow stream at locations 120 degrees apart in the cross-sectional plane of the hot leg. A hole is drilled through the end of each scoop so that water will flow in through the holes in the leading edge of the scoop, past the RTD, and out through the end hole.

The cold leg temperature is obtained for each loop by two fast response narrow-range RTDs mounted in thermowells placed in each cold leg at the discharge of the reactor coolant pump. These thermowells are located as follows: one located at the top center line of the cold leg and the other 45 degrees (clockwise for Unit 1 and counter-clockwise for Unit 2) from the top as viewed from the reactor coolant pump towards the reactor vessel.

Signals from these instruments are used to compute the reactor coolant ΔT (temperature of the hot leg, Thot, minus the temperature of the cold leg, Tcold) and an average reactor coolant temperature (Tavg). The Tavg for each loop is indicated in the main control room.

b. Wide Range Cold Leg and Hot Leg Temperatures

Temperature detectors, located in the thermometer wells in the cold and hot leg piping of each loop, supply signals to wide range temperature recorders. This information is used by the operator to control coolant temperature during startup and shutdown.

c. Pressurizer Temperature

There are two temperature detectors in the pressurizer, one in the steam phase and one in the water phase. Both detectors supply signals to temperature indicators and high-temperature alarms. The steam phase detector, located near the top of the pressurizer, can be used during startup to determine water temperature when the pressurizer is completely filled with water. The water phase detector, located at an elevation near the center of the heaters, can be used during cooldown when the steam phase detector response is slow due to poor heat transfer.

d. Surge Line Temperature

This detector supplies a signal for a temperature indicator and a low-temperature alarm. Low temperature could be an indication that the continuous spray rate is too small.

e. Safety and Relief Valve Discharge Temperatures

Temperatures in the pressurizer safety and relief valve discharge lines are measured and indicated. An increase in a discharge line temperature is an indication of operation or leakage through the associated valve.

f. Spray Line Temperatures

Temperatures in the spray lines, one from each of two loops are measured and indicated. Alarms from these signals are actuated by low spray water temperature which could indicate insufficient flow in the spray lines.

g. Pressurizer Relief Tank Water Temperature

The temperature of the water in the pressurizer relief tank is indicated, and an alarm actuated by high temperature informs the operator that cooling of the tank contents may be required.

h. Reactor Vessel Flange Leakoff Temperature

The temperature in the leakoff line from the reactor vessel flange O-ring seal connections is indicated. An increase in temperature above ambient may be an indication of O-ring seal leakage. High temperature actuates an alarm.

i. Reactor Coolant Pump Motor Temperature Instrumentation

i. Thrust Bearing Upper and Lower Shoes Temperature:

Resistance temperature detectors are provided with one located in one shoe of the upper and one in one shoe of the lower thrust bearing. These RTDs provide a signal to the plant computer.

ii. Stator Winding Temperature:

The stator windings contain multiple resistance-type detectors, at least two per phase, imbedded in the windings. A signal from one of these detectors is monitored by the plant computer which actuates a high temperature alarm.

iii. Upper and Lower Bearing Temperature:

Resistance temperature detectors are located one in one shoe of the upper and one in one shoe of the lower radial bearings. These RTDs provide a signal to the plant computer.

2. Flow Indication

a. Reactor Coolant Loop Flow

Flow is monitored by three differential pressure measurements at a piping elbow tap in each reactor coolant loop. These measurements, on a two-out-of-three coincidence circuit, provide a loss of flow signal to the reactor protection system.

3. Pressure Indication

a. Pressurizer Pressure

Four pressurizer pressure transmitters provide signals for individual indicators in the main control room, actuation of a low pressure trip, a high pressure trip, safety injection initiation and for safety injection signal unblock during plant startup. The four pressure signals provide input into two independent DCS processor controllers. The DCS selects the median-low signal to be used in each of the independent processors for control to preclude a single input signal failure from causing a plant upset. This median-low signal is used for display on the pressure recorder.

The median-low signal is also used by a three mode pressure controller along with a reference signal, or pressure setpoint, contained within the DCS. The lower portion of the controller's output range operates the pressurizer heaters. For normal operation, a small group of heaters is controlled by variable power to maintain the pressurizer operating pressure. If the pressure error signal falls towards the bottom of the variable heater control range, additional pressurizer heaters are turned on.

The upper portion of the controller's output range operates the pressurizer spray valves and one PORV. The spray valves are proportionally controlled in a range above normal operating pressure with spray flow increasing as pressure rises. If the pressure rises significantly above the proportional range of the spray valves, one PORV (interlocked with a separate and independent DCS processing group to prevent spurious operation) is opened. A further increase in pressure will actuate a high pressure reactor trip signal. The second PORV will also actuate due to high pressurizer pressure determined by the median low pressure signal in the two independent DCS processor controllers to prevent its spurious operation.

b. Reactor Coolant Loop Pressures

Reactor coolant loop pressure is measured at the locations shown on Figure 5.1-1 and indicated in the MCR. RCS pressure is also used in the RVLIS.

c. Pressurizer Relief Tank Pressure

Pressurizer relief tank pressure instrumentation is provided and indicated in the MCR.

d. Reactor Coolant Pump Motor Oil

i. Oil Lift Switch

A dual purpose switch is provided on the high pressure oil lift system. Upon low oil pressure the switch will actuate an alarm on the main control board. In addition, the switch is part of an interlock system that will prevent starting of the pump until the oil lift pump is started manually prior to starting the reactor coolant pump motor.

ii. Lower Oil Reservoir Liquid Level

A level switch is provided in the motor lower radial bearing oil reservoir. The switch will actuate a high / low level alarm in the MCR.

iii. Upper Oil Reservoir Liquid Level

A level switch is provided in the motor upper radial bearing and thrust bearing oil reservoir. The switch will actuate a high / low level alarm in the MCR.

4. Liquid Level Indication

a. Pressurizer Level

Three pressurizer liquid level transmitters provide signals for use in the Reactor Control and Protection System, the Emergency Core Cooling System and the Chemical and Volume Control System. The transmitters provide a high water level alarm and input for a reactor trip. The transmitters also provide independent low water level signals that will activate an alarm. Each transmitter has a level indicator that is located in the MCR.

The three level transmitters provide input signals into the two separate and independent DCS processors that utilize the median signal for control and indication functions as follows:

i. One DCS processing group provides the median level signal that is displayed on a level recorder located in the MCR.

ii. Each DCS processing group will actuate an alarm when level falls to a fixed level setpoint. The same signal will trip the pressurizer heaters "off" and close the letdown line isolation valves.

iii. One DCS processor supplies a signal to the pressurizer liquid level controller (also contained within DCS) for charging flow control and also initiation of a low flow (hi demand) alarm. This signal is also compared to the reference level and actuates a high level alarm and turns on pressurizer backup heaters if the actual level exceeds the allowed reference level band. If the actual level is lower than the allowed reference level band, a low alarm is actuated.

A fourth independent pressurizer level transmitter that is calibrated for low temperature conditions, provides water level indication during startup, shutdown and certain refueling operations.

b. Pressurizer Relief Tank Level

The pressurizer relief tank level transmitter supplies a signal for an indicator and high and low level alarms.

5. RCS Midloop and Reduced Inventory Instrumentation for Generic Letter 88-17

Midloop operation exists when the fluid level in the RCS is below the top of the hot legs. Reduced Inventory operation exists when the fluid level in the RCS is three feet below the Reactor Vessel flange. Specific temperature and level instrumentation requirements are:

At least two independent, continuous temperature indications representative of core exit conditions are required when the reactor vessel head is in place with irradiated fuel in the vessel. These independent temperature indications must be periodically monitored.

At least two independent, continuous RCS water level indications must be periodically checked and recorded or automatically monitored and alarmed in the control room. Two independent permanent level systems are capable of monitoring RCS level during midloop operation. The Ultrasonic Level Monitoring System (ULMS) can operate in midloop and has main control room indication which includes high and low level alarms. The Liquid Level Gauge (LLG) has main control room indication which includes high and low level alarms. The LLG is a multi-channel instrument that can operate in midloop and reduced inventory conditions. Other instrumentation can be utilized for level indication when controlled by established procedures (e.g. modified RVLIS, temporary pressure transmitters, temporary sightglass).

Procedures are provided to address loss of decay heat removal when the RCS is in a reduced inventory condition to include the following:

a) A predetermined action plan for establishing containment closure.

b) Operations cognizant of all open containment penetrations during reduced inventory conditions, and appropriate notice will be given to initiate closure actions following a loss of RHR.

c) Provide environmental monitoring for closure activities as appropriate.

d) Maintain availability of one train of hydrogen igniters and one air return fan, and guidance will be provided on their use.

e) Outage activities will be planned and scheduled to avoid perturbations to the RCS or the RHR system while the RCS is in reduced inventory condition and to provide for increased monitoring and enhanced communication if these activities cannot be avoided.

f) Two available or operable means to add inventory to the RCS at all times will be maintained, and guidance will be provided for use of these standby sources in the event of a loss of RHR in a reduced inventory condition.

g) Adequate RCS hot-side ventilation will be provided before installing each hot leg nozzle dam or when there is cold-side opening.

The RCS design and operating pressure together with the safety, PORV and pressurizer spray valve setpoints, and the protection system setpoint pressures are listed in Table 5.2.2-2. The design pressure allows for operating transient pressure changes. The selected design margin considers core thermal lag, coolant transport times and pressure drops, instrumentation and control accuracy and response characteristics, and system relief valve characteristics.

TABLE OF CONTENTS

Section	Title	Page
6.0	ENGINEERED SAFETY FEATURES	
6.1	GENERAL	6.1-1
6.2	CONTAINMENT SYSTEMS	6.2-1
6.2.1	CONTAINMENT FUNCTIONAL DESIGN	6.2-1
6.2.1.1	Design Bases	6.2-1
6.2.1.2	System Design	6.2-3
6.2.1.3	Design Evaluation	6.2-6
6.2.1.4	Testing and Inspections	6.2-50
6.2.1.5	Instrument Application	6.2-51
6.2.1.6	Protective Coatings	6.2-52
6.2.2	CONTAINMENT HEAT REMOVAL SYSTEMS	6.2-54
6.2.2.1	Design Bases	6.2-54
6.2.2.2	System Design	6.2-55
6.2.2.3	Design Evaluation	6.2-59
6.2.2.4	Testing and Inspections	6.2-60
6.2.2.5	Instrumentation Requirements	6.2-61
6.2.3	CONTAINMENT AIR PURIFICATION AND CLEANUP SYSTEM	6.2-61
6.2.3.1	Design Bases	6.2-62
6.2.3.2	System Design	6.2-63
6.2.3.3	Design Evaluation	6.2-67
6.2.3.4	Testing and Inspections	6.2-73
6.2.3.5	Instrumentation Requirements	6.2-74
6.2.3.6	Materials	6.2-74
6.2.4	CONTAINMENT ISOLATION SYSTEMS	6.2-75
6.2.4.1	Design Bases	6.2-77
6.2.4.2	System Design	6.2-82
6.2.4.3	Design Evaluation	6.2-88
6.2.4.4	Tests and Inspections	6.2-88
6.2.4.3	Materials	6.2-89
6.2.5	HYDROGEN SAMPLING IN CONTAINMENT	6.2-89
6.2.5.1	Design Bases	6.2-89
6.2.5.2	System Design	6.2-89
6.2.5.3	Design Evaluation	6.2-90
6.2.5.4	Testing and Inspection	6.2-90
6.2.5A	HYDROGEN MITIGATION SYSTEM	6.2-91
6.2.5A.1	Design Basis	6.2-91
6.2.5A.2	System Description	6.2-91

TABLE OF CONTENTS

Section	Title	Page
6.2.5A.3	Operation	6.2-92
6.2.5A.4	Safety Evaluation	6.2-92
6.2.5A.5	Testing	6.2-92
6.2.6	VACUUM RELIEF SYSTEM	6.2-93
6.2.6.1	Performance Objectives	6.2-93
6.2.6.2	Design Bases	6.2-93
6.2.6.3	System Design	6.2-94
6.2.6.4	Design Evaluation	6.2-95
6.2.6.5	Testing and Inspection	6.2-96
6.2.6.6	Materials	6.2-96
6.2.7	REFERENCES	6.2-96
6.3	EMERGENCY CORE COOLING SYSTEM	6.3-1
6.3.1	DESIGN BASES	6.3-1
6.3.1.1	Range of Coolant Ruptures and Leaks	6.3-1
6.3.1.2	Fission Product Decay Heat	6.3-1
6.3.1.3	Reactivity Required for Cold Shutdown	6.3-1
6.3.1.4	Capability to Meet Functional Requirements	6.3-2
6.3.2	SYSTEM DESIGN	6.3-2
6.3.2.1	Schematic Piping and Instrumentation Diagrams	6.3-2
6.3.2.2	Equipment and Component Design	6.3-2
6.3.2.3	Applicable Codes and Classifications	6.3-11
6.3.2.4	Materials Specifications and Compatibility	6.3-11
6.3.2.5	Design Pressures and Temperatures	6.3-12
6.3.2.6	Coolant Quantity	6.3-12
6.3.2.7	Pump Characteristics	6.3-12
6.3.2.8	Heat Exchanger Characteristics	6.3-12
6.3.2.9	ECCS Flow Diagrams	6.3-12
6.3.2.10	Relief Valves	6.3-12
6.3.2.11	System Reliability	6.3-12
6.3.2.12	Protection Provisions	6.3-16
6.3.2.13	Provisions for Performance Testing	6.3-16
6.3.2.14	Net Positive Suction Head	6.3-17
6.3.2.15	Control of Motor-Operated Isolation Valves 6.3-17	
6.3.2.16	Motor Operated Valves and Controls	6.3-17
6.3.2.17	Manual Actions	6.3-18
6.3.2.18	Process Instrumentation	6.3-18
6.3.2.19	Materials	6.3-18
6.3.3	PERFORMANCE EVALUATION	6.3-18
6.3.3.1	Evaluation Model	6.3-18

TABLE OF CONTENTS

Section	Title	Page
6.3.3.2	ECCS Performance	6.3-18
6.3.3.3	Alternate Analysis Methods	6.3-19
6.3.3.4	Fuel Rod Perforations	6.3-20
6.3.3.5	Evaluation Model	6.3-20
6.3.3.6	Fuel Clad Effects	6.3-20
6.3.3.7	ECCS Performance	6.3-20
6.3.3.8	Peak Factors	6.3-20
6.3.3.9	Fuel Rod Perforations	6.3-20
6.3.3.10	Conformance with Interim Acceptance Criteria	6.3-20
6.3.3.11	Effects of ECCS Operation on the Core	6.3-20
6.3.3.12	Use of Dual Function Components	6.3-20
6.3.3.13	Lag Times	6.3-22
6.3.3.14	Thermal Shock Considerations	6.3-22
6.3.3.15	Limits of System Parameters	6.3-22
6.3.4	TESTS AND INSPECTIONS	6.3-22
6.3.5	INSTRUMENTATION APPLICATION	6.3-24
6.3.5.1	Temperature Indication	6.3-24
6.3.5.2	Pressure Indication	6.3-25
6.3.5.3	Flow Indication	6.3-25
6.3.5.4	Level Indication	6.3-25
6.3.5.5	Valve Position Indication	6.3-26
6.3.6	REFERENCES	6.3-26
6.4	HABITABILITY SYSTEM	6.4-1
6.4.1	HABITABILITY SYSTEMS FUNCTIONAL DESIGN	6.4-1
6.4.1.1	Design Bases	6.4-1
6.4.1.2	System Design	6.4-1
6.4.1.3	Design Evaluation	6.4-4
6.4.1.4	Testing and Inspection	6.4-5
6.4.1.5	Instrumentation Requirement	6.4-6
6.5	ICE CONDENSER SYSTEM	6.5-1
6.5.1	FLOOR STRUCTURE AND COOLING SYSTEM	6.5-1
6.5.1.1	Design Bases	6.5-1
6.5.1.2	System Design	6.5-4
6.5.1.3	Design Evaluation	6.5-5
6.5.1.4	Testing and Inspection	6.5-8
6.5.2	WALL PANELS	6.5-8
6.5.2.1	Design Basis	6.5-8
6.5.2.2	System Design	6.5-8
6.5.2.3	Design Evaluation	6.5-9

TABLE OF CONTENTS

Section	Title	Page
6.5.3	LATTICE FRAMES AND SUPPORT COLUMNS	6.5-10
6.5.3.1	Design Basis	6.5-10
6.5.3.2	System Design	6.5-13
6.5.3.3	Design Evaluation	6.5-14
6.5.3.4	Testing and Inspection	6.5-15
6.5.4	ICE BASKETS	6.5-15
6.5.4.1	Design Basis	6.5-15
6.5.4.2	System Design	6.5-17
6.5.4.3	Design Evaluation	6.5-19
6.5.4.4	Testing and Inspection	6.5-21
6.5.4.5	Modifications	6.5-21
6.5.5	CRANE AND RAIL ASSEMBLY	6.5-21
6.5.5.1	Design Basis	6.5-21
6.5.5.2	System Design	6.5-22
6.5.5.3	Design Evaluation	6.5-22
6.5.6	REFRIGERATION SYSTEM	6.5-22
6.5.6.1	Design Basis	6.5-22
6.5.6.2	System Design	6.5-24
6.5.6.3	Design Evaluation	6.5-26
6.5.7	REFRIGERATION SYSTEM - COMPONENTS 6.5-30	
6.5.7.1	Design Basis	6.5-30
6.5.7.2	System Design	6.5-31
6.5.7.3	Design Evaluation	6.5-32
6.5.8	EMBEDMENTS	6.5-35
6.5.9	LOWER INLET DOORS	6.5-35
6.5.9.1	Design Basis	6.5-35
6.5.9.2	System Design	6.5-38
6.5.9.3	Design Evaluation	6.5-39
6.5.9.4	Testing and Inspection	6.5-41
6.5.10	LOWER SUPPORT STRUCTURE	6.5-41
6.5.10.1	Design Basis	6.5-41
6.5.10.2	System Design	6.5-42
6.5.10.3	Design Evaluation	6.5-44
6.5.11	TOP DECK AND DOORS	6.5-56
6.5.11.1	Design Basis	6.5-56
6.5.11.2	System Design	6.5-58
6.5.11.3	Design Evaluation	6.5-59
6.5.11.4	Testing and Inspection	6.5-61

TABLE OF CONTENTS

Section	Title	Page
6.5.12	INTERMEDIATE DECK AND DOORS	6.5-61
6.5.12.1	Design Basis	6.5-61
6.5.12.2	System Design	6.5-62
6.5.12.3	Design Evaluation	6.5-63
6.5.12.4	Testing and Inspection	6.5-64
6.5.13	AIR DISTRIBUTION DUCTS	6.5-64
6.5.13.1	Design Basis	6.5-64
6.5.13.2	System Design	6.5-65
6.5.13.3	Design Evaluation	6.5-65
6.5.14	EQUIPMENT ACCESS DOOR	6.5-65
6.5.14.1	Design Basis	6.5-65
6.5.14.2	System Design	6.5-66
6.5.14.3	Design Evaluation	6.5-66
6.5.15	ICE TECHNOLOGY, ICE PERFORMANCE AND ICE CHEMISTRY	6.5-66
6.5.15.1	Design Basis	6.5-66
6.5.15.2	System Design	6.5-66
6.5.15.3	Design Evaluation	6.5-67
6.5.15.4	Testing and Inspection	6.5-70
6.5.16	REFERENCES	6.5-72
APPENDIX 6A	- IODINE REMOVAL IN THE ICE CONDENSER SYSTEM	6A-1
6.6	AIR RETURN FANS	6.6-
6.6.1	DESIGN BASES	6.6-1
6.6.2	SYSTEM DESCRIPTION	6.6-1
6.6.3	SAFETY EVALUATION	6.6-2
6.6.4	INSPECTION AND TESTING	6.6-3
6.7	AUXILIARY FEEDWATER SYSTEM	6.7-1
6.8	PUMP AND VALVE INSERVICE INSPECTION PROGRAM	6.8-1
6.9	MOTOR-OPERATED VALVE PROGRAM-GENERIC LETTER 89-10	6.9-1
6.9.1	PROGRAM DESCRIPTION	6.9-1
6.9.2	REFERENCES	6.9-1

LIST OF TABLES

Number	Title
6.2.1-1	General Information Related to Containment
6.2.1-2	Secondary Containment Characteristics
6.2.1-3	Containment Subcompartment Pressures
6.2.1-4	Peak Differential Pressures Assuming A 15% Reduction in Flow Area in the Ice Condenser
6.2.1-5	Sensitivity Studies for D. C. Cook Plant
6.2.1-6	Ice Condenser Parameters Used in Compression Peak Pressure Analysis
6.2.1-7	Containment Pressure Calculation ECCS Switchover Pump Flow vs. Time (Loss of Off-Site Power at Event Initiation)
6.2.1-8	Normalized Decay Heat - Post-Steam Generator Equilibration
6.2.1-9	Energy Accounting - Blowdown and Reflood
6.2.1-10	Energy Accounting - Ice Melt and Peak Pressure
6.2.1-11	Deleted by Amendment 14
6.2.1-12	Allowable Leakage Area for Various Reactor Coolant System Break Sizes
6.2.1-13	Double-Ended Pump Suction Guillotine Blowdown Mass and Energy Releases
6.2.1-14	Deleted by Amendment 14
6.2.1-15	Double-Ended Pump Suction Guillotine Reflood Mass and Energy Release Minimum SI
6.2.1-16	Double-Ended Pump Suction Guillotine Minimum Safety Injection Principal Parameters During Reflood
6.2.1-17	Deleted by Amendment 14
6.2.1-18	Double-Ended Pump Suction Guillotine Minimum Safety Injection Post Reflood Mass and Energy Releases
6.2.1-19	Deleted by Amendment 14
6.2.1-20	Deleted by Amendment 14

LIST OF TABLES

Number	Title
6.2.1-21	Double Ended Pump Suction LOCA - Minimum Safeguards
6.2.1-22	Double Ended Pump Suction Guillotine Minimum Safety Injection
6.2.1-23	Double-Ended Pump Suction Guillotine Minimum Safety Injection
6.2.1-24	Steamline Mass and Energy Release Rates for Steam Generator Enclosure
6.2.1-25	Steam Generator Enclosure Geometry
6.2.1-26	Steam Generator - TMD Flowpath Input
6.2.1-27	Peak Differential Pressure - Steam Generator Enclosure
6.2.1-28	Mass and Energy Release Rates - 100 Square Inch Cold Leg Break
6.2.1-29	Reactor Cavity Flow Paths - Cold Leg Break
6.2.1-30	Reactor Cavity Volumes - Cold Leg Break
6.2.1-31	Mass and Energy Release for Steamline Rupture
6.2.1-32	Sequoyah Structural Heats Sinks
6.2.1-33	Sequoyah Ice Condenser Design Parameters Reactor Containment Value (Net Free Volume) Used for Containment Temperature Analysis
6.2.1-34	Large Break Analysis - Associated Times
6.2.1-35	Small Break Analysis - Small Split - Associated Times
6.2.1-36	Main Steam Line Break - 1.4 ft^2 Split - 102% MSIV Failure
6.2.1-37	Main Steam Line Break - 0.35 ft^2 Split - 30% AFW Runout
6.2.1-38	Main Steam Line Break - 0.6 ft^2 Split - 30% AFW Runout
6.2.1-39	Containment Data - Maximum Reverse Differential Pressure Analysis
6.2.1-40	Maximum Reverse Differential Pressure Sensitivity Analysis Base Case
6.2.1-41	Maximum Reverse Differential Pressure Analysis Ice Condenser Drain Flow vs. Time
6.2.1-42	Mass and Energy Release Rates Into Pressurizer Enclosure
6.2.1-43	Pressurizer Geometric Data

LIST OF TABLES

Number	Title
6.2.1-44	Peak Differential Pressure - Pressurizer Enclosure
6.2.2-1	Containment Spray Pump Design Parameters
6.2.2-2	Containment Spray Heat Exchanger Design Parameters
6.2.2-3	Redundancy and Independence
6.2.3-1	Regulatory Guide 1.52 (Rev 2) Section Applicability For the Emergency Gas Treatment System
6.2.3-2	Regulatory Guide 1.52 (Rev 2) Section Applicability For the Auxiliary Building Gas Treatment System
6.2.4-1	Containment Penetration
6.2.6-1	Data Table for the Vacuum Relief System
6.3.2-1	Emergency Core Cooling System Component Parameters
6.3.2-2	ECCS Relief Valve Data
6.3.2-3	Normal Operating Status Of Emergency Core Cooling System Components For Core Cooling
6.3.2-4	Sequence of Changeover Operation
6.3.2-5	Maximum Potential Recirculation Loop Leakage External to Containment
6.3.2-6	Materials Employed for Emergency Core Cooling System Components
6.3.2-7	Single Active Failure Analysis for Emergency Core Cooling System Components
6.3.2-8	Emergency Core Cooling System Recirculation Piping Passive Failure Analysis
6.3.3-1	Emergency Core Cooling System Shared Functions Evaluation
6.5.2-1	Wall Panel Design Loads
6.5.2-2	Summary of Results for Wall Panels, DBA Pressures
6.5.2-3	Wall Panels Transverse Beam Stress Summary
6.5.3-1	Lattice Frame Loads Horizontal 1/2 Safe Shutdown Earthquake

LIST OF TABLES

Number	Title
6.5.3-2	Local Seismic Loads on Lattice Frames due to Single Ice Basket
6.5.3-3	Ice Condenser Lattice Frame Loads - Blowdown Pressure Loads for Safe Shutdown Earthquake (SSE) and Design Basis Accident (DBA)
6.5.3-4	Vertical DBA Loads on Lattice Frames
6.5.3-5	Vertical Friction Loads on Lattice Frames
6.5.3-6	Maximum Lattice Frame Stress Summary
6.5.3-7	Summary of Fatigue Analysis for Lattice Frames
6.5.4-1	Ice Basket Load Summary Minimum Test Loads (LBS).
6.5.4-2	Ice Basket Load Summary Basic Design Loads (LBS).
6.5.4-3	Summary of Stresses in Basket Due to Design Loads
6.5.4-4	Ice Basket Material Minimum Yield Stress
6.5.4-5	Allowable Stress Limits (D +1/2 SSE) for Ice Basket Materials
6.5.4-6	Allowable Stress Limits (D+SSE), (D+DBA) for Ice Basket Materials
6.5.4-7	Allowable Stress Limits (D+SSE+DBA) for Ice Basket Materials
6.5.4-8	Ice Basket Clevis Pin Stress Summary
6.5.4-9	Ice Basket Mounting Bracket Assembly Stress Summary
6.5.4-10	Ice Basket Plate Stress Summary
6.5.4-11	Ice Basket U-Bolt Stress Summary
6.5.4-12	Ice Basket - Basket End Stress Summary
6.5.4-13	Ice Basket Coupling Screw - Stress Summary Bottom Coupling Elevation
6.5.4-14	Ice Basket Coupling Screw - Stress Summary 12 Foot Elevation
6.5.4-15	Ice Basket Coupling Screw - Stress Summary 24 Foot Elevation
6.5.4-16	Ice Basket Coupling Screw - Stress Summary 26 Foot Elevation
6.5.5-1	Crane and Rail Assembly Design Loads
6.5.6-1	Refrigeration System Parameters

LIST OF TABLES

Number	Title
6.5.9-1	Lower Inlet Door Design Parameters and Loads
6.5.10-1	Design Loads Three Pier Lower Support Structure
6.5.10-2	Summary of Stresses Major Structural Components Lower Support Structure Ice Condenser
6.5.11-1	Design Loads and Parameters Top Deck
6.5.11-2	Summary of Results Upper Blanket Door Structural Analysis - LOCA
6.5.12-1	Design Loads and Parameters Intermediate Deck
6.5.15-1	Summary of Waltz Mill Tests

LIST OF FIGURES

Number	Title
6.2.1-1	Deleted by Amendment 13
6.2.1-2	Typical Purge Penetration Arrangement
6.2.1-3	Deleted by Amendment 13
6.2.1-4	Plan at Equipment Rooms Elevation
6.2.1-5	Containment Section View
6.2.1-6	Plan View at Ice Condenser Elevation - Ice Condenser Compartments
6.2.1-7	Layout of Containment Shell
6.2.1-8	TMD Code Network
6.2.1-9	Upper and Lower Compartment Pressure Transient for Worst Case Break Compartment (Element 1) Having a DEHL Break
6.2.1-10	Upper and Lower Compartment Pressure Transient for Worst Case Break Compartment (Element 1) Having a DECL Break
6.2.1-11	Illustration of Choked Flow Characteristics
6.2.1.12	Steam Concentration in a Vertical Distribution Channel
6.2.1-13	Peak Compression Pressure Versus Compression Ratio
6.2.1-14	Peak Compartment Pressure Versus Blowdown Rate
6.2.1-15	Sequoyah Containment Pressure Analysis - Containment System Pressure Transient
6.2.1-16	Sequoyah Containment Pressure Analysis - Containment Upper Compartment Temperature Transient
6.2.1-17	Sequoyah Containment Pressure Analysis - Containment Lower Compartment Temperature Transient
6.2.1-18	Sequoyah Containment Pressure Analysis - Temperature Transients of the Active Sump and Inactive Sump
6.2.1-19	Sequoyah Containment Pressure Analysis - Ice Melt (LBS)
6.2.1-20	Deleted by Amendment 13
6.2.1-21	Deleted by Amendment 14

LIST OF FIGURES

Number	Title
6.2.1-22	Sensitivity of Peak Compression Pressure to Deck Bypass
6.2.1-23	Pressure Increase versus Deck Area from Deck Leakage Tests
6.2.1-24	Energy Release at Time of Compression Peak Pressure From Full-Scale Section Tests with 1-Foot Diameter Baskets
6.2.1-25	Hot Leg Double Ending Guillotine, Full Power mh Transient
6.2.1-26	Hot Leg Double Ending Guillotine, Full Power m Transient
6.2.1-27	Cold Leg Double Ended Guillotine, mh Transient
6.2.1-28	Cold Leg Double Ended Guillotine, m Transient
6.2.1-29	Hot Leg Single Ended Split, mh Transient
6.2.1-30	Hot Leg Single Ended Split, m Transient
6.2.1-31	Cold Leg Single Ended Split, mh Transient
6.2.1-32	Cold Leg Single Ended Split, m Transient
6.2.1-33	Pressurizer Spray Line mh Transient
6.2.1-34	Pressurizer Spray Line m Transient
6.2.1-35	Deleted by Amendment 14
6.2.1-36	Deleted by Amendment 14
6.2.1-37	Deleted by Amendment 14
6.2.1-38	Deleted by Amendment 14
6.2.1-39	Deleted by Amendment 14
6.2.1-40	Deleted by Amendment 14
6.2.1-41	TVA Steam Generator Enclosure
6.2.1-42	TMD Flowpaths Steam Generator Enclosures
6.2.1-43	Steam Line Break Pressure - Element 51
6.2.1-44	Steam Line Break Pressure - Element 52
6.2.1-45	Steam Line Break Pressure - Element 53

LIST OF FIGURES

Number	Title
6.2.1-46	Steam Line Break Pressure - Element 54
6.2.1-47	Steam Line Break Pressure - Element 55
6.2.1-48	Steam Line Break Pressure - Element 56
6.2.1-49	Steam Line Break Pressure - Element 57
6.2.1-50	Steam Line Break Pressure - Element 58
6.2.1-51	Steam Line Break Pressure - Element 59
6.2.1-52	Steam Line Break Pressure - Element 60
6.2.1-53	Steam Line Break Pressure - Element 25
6.2.1-54	DP 51-25 TVA Steam Generator Enclosure
6.2.1-55	DP 60-25 TVA Steam Generator Enclosure
6.2.1-56	Steam Generator Enclosure Differential Pressures P51-P60
6.2.1-57	Steam Generator Enclosure Differential Pressures P52-P54
6.2.1-58	Steam Generator Enclosure Differential Pressures P53-P55
6.2.1-59	Steam Generator Enclosure Differential Pressures P56-P58
6.2.1-60	Steam Generator Enclosure Differential Pressures P57-P59
6.2.1-61	Reactor Cavity Developed View
6.2.1-62	Reactor Cavity Flowpath Connections
6.2.1-63	Reactor Cavity Containment Model
6.2.1-63A	Reactor Cavity Pressure Analysis - Element -1
6.2.1-63B	Reactor Cavity Pressure Analysis - Element -2
6.2.1-63C	Reactor Cavity Pressure Analysis - Element -3
6.2.1-63D	Reactor Cavity Pressure Analysis - Element -4
6.2.1-63E	Reactor Cavity Pressure Analysis - Element -5
6.2.1-63F	Reactor Cavity Pressure Analysis - Element -32
6.2.1-64	Containment Temperature Versus Time for Break at 102% Power

LIST OF FIGURES

Number	Title
6.2.1-65	Lower Compartment Pressure Versus Time for Break at 102% Power
6.2.1-66	Containment Temperature Versus Time for Break at 30% Power
6.2.1-67	Compartment Pressure Versus Time for Break at 30% Power
6.2.1-68	Containment Temperature Versus Time for Breaks at 30% Power
6.2.1-69	Lower Compartment Containment Pressure Versus Time for Break at 30% Power
6.2.1-70	Maximum Reverse Pressure - Differential Containment Model
6.2.1-71	Upper and Lower Compartment Pressures for Maximum Reverse Pressure Differential Analysis
6.2.1-72	Upper and Lower Containment Temperatures From Maximum Reverse Pressure Differential Analysis
6.2.1-73	Upper to Lower Containment Flowrates From Maximum Reverse Pressure Differential Analysis
6.2.1-74	Case 6 - Maximum Reverse Pressure Differential Analysis
6.2.1-75	Case 6 - Maximum Reverse Pressure Differential Analysis
6.2.1-76	Ice Condenser Drain Flow for Maximum Reverse Differential Analysis
6.2.1-77	Nodalization of Pressurizer
6.2.1-78	Pressure Transient Between Break Element and Upper Compartment
6.2.1-79	Pressure Differential Across the Pressurizer Vessel
6.2.1-80	Pressure Differential Across the Pressurizer Vessel
6.2.1-81	Pressure Differential Across the Pressurizer Vessel
6.2.1-82	Pressure versus Time for the Break Element
6.2.1-83	Schematic of Reflood Code 19 Element Loop Model
6.2.2-1	Flow Diagram - Containment Spray System
6.2.2-2	Containment Spray Pump Logic
6.2.2-3	Containment Spray Pump Characteristics
6.2.3-1	Post Accident Annulus Pressure and Reactor Unit Vent Flow Rate Transients
6.2.4-1	Mechanical Logic Diagram - Containment Isolation

LIST OF FIGURES

Number	Title
6.2.5A-1	Igniter Locations - Lower Compartment and Dead - Ended Compartments
6.2.5A-2	Igniter Locations - Lower Compartment
6.2.5A-3	Igniter Locations - Upper Plenum and Upper Compartment
6.2.5A-4	Igniter Locations - Dome
6.2.5A-5	Igniter Locations - Elevation View
6.2.5B-1	Electric Hydrogen Recombiner
6.2.6-1	Containment and Annulus Pressure Transient Due to Inadvertent Spray and Air Return Fan Systems Operation
6.2.6-2	Containment and Annulus Pressure Transients due to Inadvertent Spray and Air Return Fan Systems Operation
6.2.6-3	Containment and Annulus Pressure Transients due to Inadvertent Spray and Air Return Fan Systems Operation
6.3.2-1	Flow Diagram, Safety Injection System
6.3.2-2	Safety Injection Pump Logic
6.3.2-3	Reactor Building Elevation ECCS - Active Sump and Inactive Sump Locations
6.3.2-4	Containment Sump with Vortex Modifications Suppression
6.3.2-5	NPSH and Head Capacity Curves for RHR Pumps
6.3.2-6	NPSH and Head Capacity Curves for Safety Injection Pumps
6.3.2-7	NPSH and Head Capacity Curves for Centrifugal Charging Pumps
6.5.1-1	Isometric of Ice Condenser
6.5.1-2A	Original Floor Structure
6.5.1-2B	Modified Floor Structure
6.5.1-3	Wear Slab Top Surface Area Showing Typical Coolant Piping Layout
6.5.2-1	Crane Wall Panel Drawing
6.5.2-2	Wall Panel DBA Pressure Loading Model
6.5.2-3	Wall Panel Local Stress Analysis

LIST OF FIGURES

Number	Title
6.5.3-1	Lattice Frame Orientation
6.5.3-2	Load Distribution for Tangential Seismic and Blowdown Loads in Analytical Model
6.5.3-3	Lattice Frame
6.5.3-4	Lattice Frame Analysis Model
6.5.3-5	Transverse Beam Analytical Model
6.5.4-1	Typical Bottom Ice Basket Assembly
6.5.4-2	Combination of Concentric Axial Load and Distributed Load that Will Cause Failure of A Perforated Metal Ice Basket Material: A-569 Steel, Gauge-14, 1.0“ Sq. Holes
6.5.6-1	Ice Condenser Glycol System
6.5.7-1	Air Handling Unit Support Structure
6.5.9-1	Flow Area - Pressure Differential
6.5.9-2	Lower Inlet Door Assembly
6.5.9-3	Details of Lower Inlet Door Showing Hinge, Proportioning Mechanism Limit Switches and Seals
6.5.9-4	Inlet Door Frame Assembly
6.5.9-5	Inlet Door Panel Assembly
6.5.9-6	Lower Inlet Door Shock Absorber Assembly
6.5.9-7	Lower Inlet Door Differential Pressure - Time History
6.5.10-1	Lower Support Structure Support Floor Embedments
6.5.10-2	Lower Support Structure Details
6.5.10-3	Schematic of Ice Condenser Support Floor
6.5.10-4	Schematic Diagrams of Forces Applied to Three Pier Lower Support Structure
6.5.10-5	Lower Support Structure Three Pier Finite Element Model
6.5.10-6	Mass Distribution Three Pier Finite Element Model

LIST OF FIGURES

Number	Title
6.5.10-7	Lower Support Structure Three Pier Finite Element Model Platform Plan
6.5.10-8	Lower Support Structure Three Pier Finite Element Model Portal Frame Elevation
6.5.10-9	Ice Basket Uplift Force Transient
6.5.10-10	Drag Pressure Uplift Across Intermediate Deck
6.5.10-11	Force Transient Cold Leg Break
6.5.10-12	Force Transient Hot Leg Break
6.5.10-13	Transient Response Spectra Vertical Blowdown Uplift Forces
6.5.10-14	Transient Response Spectra Pressure Across Intermediate Deck
6.5.10-15	DLF Spectra Cold Leg Break Force Transient
6.5.10-16	DLF Spectra Hot Leg Break Force Transient
6.5.11-1	Top Deck Test Assembly
6.5.12-1	Intermediate Deck Door Assembly
6.5.12-2	Intermediate Deck Differential Pressure - Time History
6.5.13-1	Air Distribution Duct
6.5.15-1	Phase Diagram for $Na_2B_4O_7$.10H/Water System at One Atmosphere (Reference 1)
6.5.15-2	Ice Bed Compaction versus Time
6.5.15-3	Test Ice Bed Compaction versus Ice Bed Height
6.5.15-4	Total Ice Compaction versus Ice Bed Height

6.0 ENGINEERED SAFETY FEATURES

6.1 GENERAL

The engineered safety features provided for each unit include sufficient redundancy of components and power sources to prevent undue risk to public health and safety under the conditions of a hypothetical design basis accident.

The systems provided are summarized below:

1. The steel containment vessel provides a highly reliable barrier against the escape of fission products. All vessel penetrations with gasket or bellows sealed components are provided with double containment which is available for periodic leak testing. Pipes or ducts penetrating the containment which could become potential paths for leakage to the environment following a loss of coolant accident are provided with isolation valves.

   Containment penetrations are designed to prevent leakage from the containment and testable penetrations can be pressurized to values above containment design pressure for leak rate testing.

2. The Emergency Core Cooling System protects the fuel cladding following a loss of coolant accident by providing a timely and adequate supply of borated water to the Reactor Coolant System and, ultimately, the reactor core. The Emergency Core Cooling System provides high head (safety injection pumps and centrifugal charging pumps) injection, low head (residual heat removal pumps) injection and accumulator injection immediately following an accident. Low head/high head recirculation is used in the long-term recovery period.

3. The Containment Spray System provides a spray of cool, borated water to the containment atmosphere. The spray acts as an extended term method of condensing steam after all the ice in the ice condenser has melted. The spray system includes heat exchangers, which, in conjunction with the residual heat removal heat exchangers act as heat sinks for core residual heat.

4. The shield building and auxiliary building provide the necessary shielding for normal and emergency conditions and, in addition, provide a secondary barrier to fission products leaking from the primary containment vessel. This barrier, with the Emergency Gas Treatment System and Auxiliary Building Gas Treatment System, reduces the affect of such leakage by providing holdup time for decay and by collecting the leakage for filtration.

5. The Ice Condenser System provides borated ice to absorb the thermal energy released in the event of a LOCA or HELB to limit the peak pressure and temperature in the containment. The borated solution formed by meltdown of the ice absorbs and retains iodine released during the accident and prevents dilution of the borated water injected from the refueling water storage tank and accumulators. This solution also contributes to the inventory of water used for long-term heat removal from the reactor core and containment atmosphere.

6. Combustible gas is controlled inside primary containment by the Hydrogen Recombiners and Hydrogen Mitigation System.

6.0 ENGINEERED SAFETY FEATURES

7. The Air Return Fans enhance the performance of the Ice Condenser and Containment Spray Systems by circulating air/steam from upper containment to lower containment for another pass through the ice condenser back to upper containment.

8. The Main Control Room Habitability System provides HVAC for the control room and ensures 10CFR50 GDC 19 operator dose limits are met.

9. The Auxiliary Feedwater System supplies, in the event of a loss of the main feedwater supply, sufficient feedwater to the steam generators to remove primary system stored and residual core energy.

A primary containment Vacuum Relief System is also provided to limit external pressure on the free standing containment vessel by allowing air flow from the annulus into the upper containment. The system serves to mitigate events that challenge the integrity of a fission product barrier (primary containment) and therefore performs a *specified safety function* as defined by 10 CFR 50.36(c)(2)(ii). However, because it does not mitigate the consequences of an accident, it does not meet the definition of an Engineered Safety Feature.

6.2 CONTAINMENT SYSTEMS

6.2.1 Containment Functional Design

6.2.1.1 Design Basis

6.2.1.1.1 Primary Containment Design Basis

The containment is designed to assure that an acceptable upper limit of leakage of radioactive material is not exceeded under design basis accident conditions. For purposes of integrity, the containment may be considered as the Containment Vessel and Containment Isolation System. This structure and system are directly relied upon to maintain containment integrity. The Emergency Gas Treatment System and Reactor Building function to keep out-leakage minimal (the Reactor Building also serves as a protective structure), but are not factors in determining the design leak rate.

The containment is specifically designed to meet the intent of the applicable General Design Criteria listed in Section 3.1. This Subsection 6.2.1, Chapter 3 and other portions of Chapter 6 present information showing conformance of design of the containment and related systems to these criteria.

The ice condenser is designed to limit the containment pressure below the design pressure for all reactor coolant pipe break sizes up to and including a double-ended severance. Characterizing the performance of the ice condenser requires consideration of the rate of addition of mass and energy to the Containment as well as the total amounts of mass and energy added. Analyses have shown that the accident which produces the highest blowdown rate into an ice condenser containment will result in the maximum containment pressure rise; that accident is the double-ended severance of a reactor coolant pipe. The design basis accident is therefore defined to be the double-ended severance of a reactor coolant pipe. Post-blowdown energy releases can also be accommodated without exceeding containment design pressure.

The functional design of the containment is based upon the following accident input source term assumptions and conditions:

1. The design basis blowdown energy of 334.6×10^6 BTU and mass of 543,300 lb put into the containment.

2. A core power of 3455 MWt (plus 0.7%) used for decay heat generation.

3. The minimum Engineered Safety Features are (i.e., the single failure criterion applied to each safety system) comprised of the following:

    a. The ice condenser which condenses steam generated during a LOCA, thereby limiting the pressure peak inside the containment (see Section 6.5).

    b. The Containment Isolation System which closes those fluid penetrations not serving accident-consequence limiting purposes (see Subsection 6.2.4).

    c. The Containment Spray System which sprays cool water into the containment atmosphere, thereby limiting the pressure peak (particularly in the long term - see Subsection 6.2.2).

d. The Emergency Gas Treatment System (EGTS) which produces a slightly negative pressure within the annulus, thereby precluding out-leakage and relieving the post-accident thermal expansion of air in the annulus (see Subsection 6.2.3).

e. The Air Return Fans which return air to the lower compartment (see Section 6.6).

Table 6.2.1-1 provides general information about containment design parameters.

Consideration is given to subcompartment differential pressure resulting from a design basis accident in Section 3.8, Containment Interior Structure Structural Analysis, and in Subparagraph 6.2.1.3.3, Containment Pressure Transient - Short Term Analysis. If a design basis accident were to occur due to a pipe rupture in these relatively small volumes, the pressure would build up at a faster rate than in the Containment, thus imposing a differential pressure across the wall of these structures.

Parameters affecting the assumed capability for post-accident pressure reduction are discussed in Subparagraph 6.2.1.3.4, Containment Pressure Transient - Long Term Analysis.

Three events have a potential for generating an external pressure on the Containment Vessel:

1. Rupture of a process pipe where it passes through the annulus.

2. Inadvertent Containment Spray System initiation during normal operation.

3. Inadvertent air return fan operation during normal operation.

The design of the guard pipe portion of hot penetrations (subsection 6.2.4) is such that any process pipe leakage in that area is returned to the containment. All process piping which has potential for annulus pressurization upon rupture is routed through hot penetrations.

FSAR Section 3.8 describes the structural design of the containment vessel. The containment vessel is designed to withstand a net external pressure of 0.5 psi. The Vacuum Relief System (Subsection 6.2.6) is designed to prevent the net external design pressure from being exceeded by inadvertent containment spray initiation and/or inadvertent air return fan operation.

Therefore, the containment vessel is designed to withstand the maximum expected net external pressure in accordance with ASME Pressure and Vessel Code Section III paragraph NE-7116.

6.2.1.1.2 Secondary Containment Design Bases

The design bases for the secondary containment system were devised to assure that an effective barrier will exist for airborne fission products that may leak from the primary containment during a loss-of-coolant accident (LOCA). Within the scope of these design bases are requirements that influence the size, structural integrity, and leak tightness of the secondary containment enclosure. Specifically, these include a capability to: (a) Maintain an effective barrier for gases and vapors that may leak from the primary containment during all normal and abnormal events; (b) Delay the release of any gases and vapors that may leak from the primary containment during a LOCA; (c) Allow gases and vapors that may leak through the primary containment during a LOCA to flow into the contained air volume within the secondary

containment where it will be diluted, held up, and filtered prior to being released to the environs (see Subsection 6.2.3.1 for the EGTS and ABGTS Air Cleanup Subsystems Design Bases); (d) Bleed to the annulus secondary containment each air-filled containment penetration enclosure which extends beyond the shield building and that is formed by automatically actuated isolation valves; and (e) Maintain an effective barrier for airborne radioactive contaminants, gases and vapors originating in the auxiliary building during all normal and abnormal events.

6.2.1.2 System Design

6.2.1.2.1 Primary Containment System Design

The Containment consists of a Containment Vessel and a separate Reactor Shield Building enclosing the Containment Vessel and annulus. The Containment Vessel is a freestanding, welded steel structure with a vertical cylinder, hemispherical dome, and a flat circular base that provides Primary Containment. The Reactor Shield Building is a reinforced concrete structure similar in shape to the Containment Vessel that protects the containment Vessel from external events. The design of these structures is described in Section 3.8.

The design pressure, temperature, and methods used to ensure integrity of the Containment internal structures and sub-compartments from accident pressure pulses are described in Section 3.8.

The type of Containment used for the Sequoyah Nuclear Plant was selected for the following reasons:

1. The Ice Condenser Containment can accept large amounts of energy and mass inputs and maintain low internal pressures and leakage rates. A particular advantage of the ice condenser is its passive actuation not requiring an actuation system signal.

2. The Containment combines the required integrity, compact size, and a carefully considered advanced design desirable for a nuclear plant.

3. The double-enclosure concept affords minimal interaction between the Containment Vessel (leakage barrier) and the Reactor Building (protected structure); a margin of conservatism in leakage rate from the use of two structures and the EGTS; and a reduction of gaseous and particulate radioactive release due to annulus mixing and holdup prior to filtering and release.

6.2.1.2.2 Secondary Containment System Design

Two secondary containment barriers are provided at the Sequoyah Nuclear Plant. One of these is formed by the Reactor Shield Building that surrounds the steel primary containment vessel. The other secondary containment barrier is the Auxiliary Building structure that encloses all equipment in the building that may handle, collect or store radioactive materials during normal operation or during accidents.

1. Reactor Shield Building Secondary Containment Enclosure (Annulus)

The principal components that function collectively to form a secondary containment barrier around the steel primary containment vessel are the Shield Building itself, the Shield Building penetration seals, the isolation valves installed in the penetrations to the Shield Building, and the Shield Building penetration leakoff facilities.

Structure

The Reactor Shield Building is a reinforced concrete structure that encloses the reactor steel primary containment structure. It has a circular horizontal cross section and a shallow domed roof. The vertical center line of this building is also the vertical center line of the steel primary containment vessel. The inside diameter of this building was sized to provide an annular shaped air space between the two reactor enclosures that is five feet wide. The total enclosed free air space between the two enclosures is about 375,000 cubic feet. Additional data on the Shield Building is provided in Section 3.8 and in Table 6.2.1-2. Testing is performed in accordance with the Technical Specifications to ensure compliance with in-leakage limits.

Penetrations

To ensure that the shield building provides a nearly leak tight enclosure for the primary containment structure, all openings in the shield building penetrations are sealed. Typical mechanical piping or ventilation penetrations are equipped with a flexible membrane seal and are discussed further in subsection 6.2.1.3.2. The primary containment personnel hatch passes through the shield building and opens directly to the auxiliary building. This opening in the shield building wall is handled as an ordinary piping penetration and is provided with a flexible, double membrane shield as shown in Figure 3.8.2-11 (see Section 3.8). Personnel and equipment access doors to the secondary containment are treated as special cases and are provided with resilient seals. (See Subsection 3.8.4 for a description of the personnel access doors and Subsection 3.8.1 for a description of the equipment access doors.)

Air filled lines which must be isolated by automatic valve actuation and which penetrate both the primary containment and the secondary building are considered more likely to pass airborne radioactivities than other lines. Therefore these lines are provided with a third isolation valve outside the secondary containment for additional leak protection. This single, third valve is tied into both train A and B actuation signals and power. Electronic buffering prevents an electrical failure in one train from affecting the performance of the other. To enhance the effectiveness of the third isolation valve as a barrier to leakage, the enclosed volume between the second and third isolation valves is opened to the annulus during isolation. Opening this enclosed space to the annulus is accomplished with leakoff lines as shown in Figure 6.2.1-2 (Typical Purge Penetration Arrangement). When an isolation valve is closed, the leak-off allows the negative pressure in the annulus to include this small volume, and leakage from the primary containment outward or leakage from the Auxiliary Building inward will be drawn into the annulus for processing. The lines provided with this feature are those for the primary containment purge supply and exhaust and the lower compartment pressure relief.

Electrical penetrations are of either a cable tray/cable sleeve type or a conduit type. For cable tray/cable sleeve patterns, silicone room temperature vulcanizing (RTV) foam is used as the sealant around cables and openings within the cable sleeves. In conduit penetrations, the interstitial spaces between cables and conduit or conduit walls are filled with RTV silicone rubber or Chico Type A cement as the sealant over a portion of the length of the penetration.

2. Auxiliary Building Secondary Containment Enclosure

Structure

The auxiliary building is a conventional reinforced concrete structure located between the reactor buildings and the control building as shown in Figures 1.2.3-1 through 1.2.3-9. Its basic functions are to house support and safety equipment for the primary system and to provide an isolation barrier during certain postulated accidents involving airborne radioactive contamination. Certain of the building's interior and exterior walls, floor slabs, and a part of its roof form the isolation barrier, which is shown as a heavy bolded line on drawing series 46W501. The enclosed volume is about 3.5 x 10^6 cubic feet. The only openings in the isolation barrier are sealed mechanical and electrical penetrations, normally locked-closed doors, or airlocks. The building itself is by design and construction leak tight. Additional structural data on the auxiliary building is provided in Subsection 3.8.4.

The accident situations for which the auxiliary building isolation barrier will serve as a containment barrier are those involving irradiated fuel within the confines of the building and spills or leaks of radioactive materials from tanks and process lines inside the building. During a LOCA, any through-the-line leakage from primary containment into the auxiliary building will bypass the shield building annulus, in this case, the ABSCE will serve as part of the secondary containment enclosure.

Penetrations

Mechanical and electrical penetration seals in the isolation barrier will be similar to those for the shield building. See Subsection 6.2.1 for design details. Other potential leakage paths into the auxiliary building will be ventilation openings and equipment and personnel access points. Testing is performed in accordance with the Technical Specifications to ensure compliance with pressure limits.

All auxiliary building ventilation supply and exhaust ducts are provided with two low leakage isolation dampers in series. These two isolation dampers are heavy duty with resilient seals along the blade edges. Where practical, one damper in each pair is located inboard and one outboard of the containment barrier. The dampers fail in the closed position upon loss of power.

All normally used entrances and exits into the ABSCE for both equipment and personnel are through air locks during power operation. The air lock locations are shown in figures found in Section 1.2.3. The doors in each air lock are electrically interlocked such that only one side of the air lock can be opened at a time. As a safety precaution, an interlock defeat switch is provided to allow emergency egress should either side of the air lock be blocked open in an accident.

A special case is the interlock system for the large exterior door to the railway loading area. The large door is treated as one side of the air lock and either the two doors leading to the fuel handling area or the railway access hatch covers above can act as the other side of the lock. When the large railroad door is open, neither of the doors to the fuel handling area nor the access hatches above can be opened, and when either of these two doors and either of the access hatches above are open, the large railway access door cannot be opened. The railway access doors and hatches are described in Subsection 3.8.4.

6.2.1.3 Design Evaluation

The design basis for containment pressure transients has been revised for Sequoyah. This design basis is documented in WCAP 12455, Revision 1 (Reference 72). Since the pressure transient for Sequoyah is limited by the minimum safeguards condition, the documentation for the minimum safeguards cases presented in Section 6.2.1.3 are based on the above referenced WCAP.

6.2.1.3.A Sensitivity to Containment Spray Heat Exchanger Tube Plugging

LOCA Containment Integrity containment pressure calculations have been completed to assess the effect of containment spray heat exchanger tube plugging on containment response. The limiting pressure transient for Sequoyah documented in WCAP 12455, the Double-ended Pump Suction Minimum Safeguards case, was addressed. Documentation of the minimum safeguards case is presented in Section 6.2.1.3. This analyses supports a heat exchanger tube plugging limit of 13.3 percent.

6.2.1.3.1 Primary Containment Evaluation

1. The primary containment's leak tightness does not depend on the operation of any continuous monitoring or compressor system. The leak testing of the primary containment and its isolation system is discussed in Section 6.2.1.4.1 and 6.2.1.4.2.

2. The acceptance criteria for the leak tightness of the primary containment are such that at containment design pressure, there is a 25% margin between the acceptable maximum leakage rate and the maximum permissible leakage rate.

3. Reduced inventory/mid-loop requirements dictate to reasonably assure that containment closure can be achieved when core uncovery could result from a loss of RHR coupled with the inability to initiate alternate cooling or addition of water to RCS inventory.

6.2.1.3.2 Secondary Containment Evaluation

The secondary containment enclosures were designed to provide a positive barrier to all potential primary containment leakage pathways during a LOCA and to radioactive contaminants released in accidental spills and fuel handling accidents that may occur in the auxiliary building. In a LOCA, the shield building containment enclosure provides the barrier to airborne primary containment leakage from air-filled automatic isolating penetrations, and the auxiliary building provides a barrier to through-the-line leakage which can potentially become airborne.

1. Shield Building

   Structure

   The building construction employs monolithic pours of concrete. This approach for structures of this type produces a very low leakage barrier. The low leakage characteristics of this barrier help to reduce the rate at which filtered annulus air must be released to maintain the enclosed volume at a negative pressure. This factor contributes significantly to keeping the exclusion area boundary and the low population zone (LPZ) dosage levels within 10 CFR 100 guidelines.

The size of the annular region between the primary containment and the shield building assures a residence time for all leakage into the annulus. The residence time will average about 90 minutes and is a significant factor in reducing exclusion area boundary and LPZ dosages. The accident dosage analyses is given in Subsection 15.4.1 and Appendix 15B.

Penetrations

The shield building wall is provided with more than 200 penetrations to accommodate mechanical equipment piping, cable trays, and electrical conduit which leave and enter the shield building. Leakage through the shield building wall when the annulus is at a negative pressure is expected to be restricted almost entirely to openings in these penetrations. The design thus assures that penetration leakage will not exceed predetermined quantities. Such a capability ensures that the inleakage will be sufficiently low to keep the dose contributions at the exclusion area boundary and to the LPZ within 10 CFR 100 guidelines.

Openings in mechanical piping penetrations are sealed typically with a combination of silicone room temperature vulcanizing (RTV) foam, slygard 170 silicone elastomer, a flexible membrane boot type on the inside and/or outside of the shield wall, welded plates, or single gaskets which are designed to withstand the combinations of shield building and piping movements in the SSE and retain their functional integrity. In addition, seals at or below elevation 724.0 in buildings subject to flooding are designed to be water tight for flood static head and surge forces. All seals, where possible, are installed outside the shield building such that whether during normal operation, accidents, or flood, the differential pressures will tend to enhance the tightness of the seal. The Shield Building penetration seal materials have been selected to sustain the integrated doses for 40 years normal plant operation and LOCA/HELB events.

Cables routed in cable trays pass through the shield building wall through rectangular cable sleeve penetrations. The single interior metal barrier plate of the penetration assembly, containing the metal cable sleeves, effectively seals most of the open space within the wall opening for cable trays. The sealant material installed around cables within the cable sleeves is silicone RTV (room temperature vulcanizing) foam and RTV silicone rubber is installed around cables within conduits. The seals are designed to withstand the SSE and retain their integrity. Electrical penetration seals are allowed twice the leakage of mechanical seals to provide sufficient margin in meeting the total allowable shield building leakage requirements.

At or below elevation 724.0, Chico Type A sealant is installed around cables within conduit and RTV silicone is used to seal capped conduit penetrations. The seals are designed to withstand the SSE and retain their integrity, as well as withstand hydrostatic forces generated by the Design Basis Flood.

Fire protection requirements for penetrations are discussed in the Fire Protection Report (see 9.5.1).

The personnel and equipment access doors to the shield building are designed with heat resistant, resilient seals which reduce their leakage to allowable values as stated. These doors are designed to retain their structural integrity and leak tightness during a SSE as described in Subsections 3.8.1 and 3.8.4.

The fuel transfer tubes penetrate the primary and secondary containment on their way to the auxiliary building. Each transfer tube has a blind flange on the inboard side of primary containment equipped with double 0-rings and a pressure test connection between the 0-rings. The valve in the auxiliary building end of the transfer tube serves as the secondary containment isolation valve. The inner space between the primary containment flange and the isolation valve is bled to the annulus so that any leakage into the tube from primary containment or the auxiliary building flows into the annulus. The bleed line is routed above the maximum refueling pool water level to preclude accidental spills of refueling water.

2. Auxiliary Building

Structure

The entire auxiliary building including walls, roof and interior partitions is constructed by consecutive monolithic pours of concrete. This method of assembly produces structure with very low leakage characteristics. The portions of the building chosen to constitute the isolation barrier were selected such that all sources of potential contamination are completely enclosed. Therefore, the structure utilized to form the auxiliary building containment envelope will function effectively as a barrier to the release of unprocessed auxiliary building air to the environs. This same structure will also help to reduce inleakage into the auxiliary building containment envelope during accidents to levels easily accommodated by the ABGTS.

Penetrations

Seals for mechanical penetrations are a flexible membrane type or single gaskets. They are designed to withstand auxiliary building and piping movements on the SSE and retain their structural integrity. All seals, where possible, are designed such that whether during normal operation or accidents, the differential pressures will tend to enhance the tightness of the seal. Sealing methods for electrical penetrations are similar to those for the shield building electrical penetrations.

The ventilation duct isolation dampers are double-tracked with one inside and one outside the containment barrier for physical separation where practical. The dampers have resilient blade end and blade edge seals which will retain their functional characteristics indefinitely over the operational temperature extremes. The motor operators for these dampers have been sized to tightly close the damper blades against their resilient seals. The entire damper and motor operator assembly is designed to operate during and after the SSE.

Fire protection requirements for penetrations are discussed in the Fire Protection Report (see 9.5.1).

6.2.1.3.3 Containment Pressure Transients - Short Term Analysis

Description of Analysis

Calculating pressure and temperature transients following a loss of coolant accident is a three-step process involving the computer codes and a calculation for the compression ratio.

During the first few seconds of the blowdown period of the reactor coolant system, the TMD computer code (References 14 and 15) with unaugmented critical flow and the Y compressibility factor is used to calculate pressure and temperature transients. It is during this period that the peak transient pressures, differential pressures, temperature and blowdown loads occur.

The containment pressure at or near the end of blowdown is calculated by the containment compression ratio analysis described in Subparagraph 6.2.1.3.4. Although the TMD code can be run to the end of the blowdown, this is not normally done, because the TMD code assumptions, such as no structural heat sinks and no containment sprays, become important in a long transient. The TMD code can conservatively compute the RCS blowdown transient.

The LOTIC code (References 18 and 30) does not calculate containment pressure during the RCS blowdown. The containment pressure calculation in LOTIC begins after blowdown.

At the end of the blowdown phase, the containment pressure is inputted at the compression ratio value. The containment upper and lower compartment temperatures are calculated based on this compression. These temperatures are not necessarily the same as that predicted by the TMD code.

During the blowdown phase, LOTIC computer code goes through an initialization calculation computing ice mass, sump temperatures, and heat sink temperatures. After the initialization calculation, the LOTIC code calculates the pressure and temperature during the depressurization and long-term periods. An explanation of the method of calculation employed is given in Subparagraph 6.2.1.3.4.

Introduction

The basic performance of the Ice Condenser Reactor Containment System has been demonstrated for a wide range of conditions by the Waltz Mill Ice Condenser Test Program (Reference 29). These results have shown the capability and reliability of the Ice Condenser Concept to limit the containment pressure rise subsequent to a hypothetical loss-of-coolant accident.

To supplement this experimental proof of performance, a mathematical model has been developed to simulate the ice condenser pressure transients. This model, encoded as computer program TMD (Transient Mass Distribution), provides a means for computing pressures, temperatures, heat transfer rates, and mass flow rates as a function of time and location throughout the containment. This model is used to compute pressure differences on various structures within the containment as well as the distribution of steam flow as the air is displaced from the lower compartment. Although the TMD code can calculate the entire blowdown transient, the peak pressure differences on various structures occur within the first few seconds of the transient.

Analytical Models - (No Entrainment)

The mathematical modeling in TMD is similar to that of the SATAN blowdown code in that the analytical solution is developed by considering the conservation equations of mass, momentum and energy and the equation of state, together with the control volume technique for simulating spatial variation. The governing equations for TMD are given in Reference 14.

The moisture entrainment modifications to the TMD code is discussed, in detail, in Reference 15. These modifications comprise of incorporating the additional entrainment effects into the momentum and energy equations.

As part of the review of the TMD code, additional effects are considered. Changes to the analytical model required for these studies are described in Reference 15.

These studies consist of:

1. Spatial acceleration effects in ice bed,
2. Liquid entrainment in ice beds,
3. Upper limit on sonic velocity,
4. Variable ice bed loss coefficient,
5. Variable door response,
6. Wave propagation effects.

Experimental Verification

The performance of the TMD code was verified against the 1/24th scale air tests and Waltz Mill tests. For the 1/24th scale model the TMD code was utilized to calculate flow rates to compare against experimental results. The effect of increased nodalization was also evaluated. The details of the information are given in Reference 14. The Waltz Mill test comparisons involved a reexamination of test data. In conducting the reanalysis, representation of the Waltz Mill test was reviewed with regard to parameters such as loss coefficients and blowdown time history.

The TMD code uses a mixed element model with thermal equilibrium between the air, steam and water. This model is conservative and predicts Waltz Mill test results. See Reference 21 for details.

Application to Plant Design (General Description)

As described in Reference 15, the control volume technique is used to spatially represent the containment. The containment is divided into 50 elements to give detailed representation of the local pressure transient on the containment shell and internal concrete structures. This division of the containment is similar for all ice condenser plants.

The Sequoyah plant containment has been divided into 50 elements or compartments as shown in Figures 6.2.1-4, 6.2.1-5, 6.2.1-6 and 6.2.1-7. The interconnection between containment elements in the TMD code is shown schematically in Figure 6.2.1-8. Flow resistance and inertia are lumped together in the flow paths connecting the elements shown. The division of the lower compartments into 6 volumes occurs at the points of greatest flow resistance, i.e., the four steam generators, pressurizer and refueling cavity.

Each of these lower compartment sections delivers flow through doors into a section behind the doors and below the ice bed. Each vertical section of the ice bed is, in turn, divided into three elements. The upper plenum between the top of the ice bed and the upper doors is represented by an element. Thus, a total of thirty elements (elements 7 through 24 and 38 through 49) are used to simulate the ice condenser. The six elements at the top of the ice bed between bed and upper doors deliver to element number 25 the upper compartment. Note that cross flow in the ice bed is not accounted for in the analysis; this yields the most conservative results for the particular calculations described herein. The upper reactor cavity (element 33) is connected to the lower compartment volumes and provides cross flow for pressure equalization of the lower compartments. The less active compartments, called dead-ended compartments (elements 26 through 32 and 34 through 37) outside the crane wall are pressurized by ventilation openings through the crane wall into the fan compartments.

For each element in the TMD network the volume, initial pressure and initial temperature conditions are specified. The ice condenser elements have additional inputs of mass of ice, heat transfer area and condensate layer length. For each flow path between elements flow resistance is specified as a loss coefficient "K" or a friction loss "$f\frac{L}{D}$" or a combination of the two based on the flow area specified between elements. Friction factor, friction factor length and hydraulic diameter are specified for the friction loss. The code input for each flow path is the flow path length used in the momentum equation. In addition the ice condenser loss coefficients have been based on the 1/4 scale tests without inlet door port rounding which is representative of the ice condenser geometry. The test loss coefficient includes basket roughness effects and intermediate and top deck pressure losses. To better represent short term transients effects, the

opening characteristics of the lower, intermediate and top deck ice condenser doors have also been modeled in the TMD code. The containment geometric data for the elements and flow paths used in the TMD code is confirmed to agree with the actual design by the utility and Westinghouse. An initial containment pressure of 0.3 psig was assumed in the analysis. Initial containment pressure variation about the assumed 0.3 psig value has only a slight effect on the initial pressure peak and the compression ratio pressure peak.

The reactor coolant blowdown rates used in these cases are based on the SATAN analysis of a double-ended rupture of either a hot or cold leg reactor coolant pipe utilizing a discharge coefficient of 1.0. The blowdown analysis has been presented in Subparagraph 6.2.1.3.6.

Analyses have been conducted implementing unaugmented critical flow correlations. Results of the analyses for the Sequoyah Plant are presented in Table 6.2.1-3. The short term peak pressures and peak differential pressures occur within 1.0 second of the blowdown. A number of analyses have been performed. The analysis were performed using the following assumptions and correlations:

1. Flow was limited by the unaugmented critical flow correlation.

2. The TMD variable volume door model, which accounts for changes in the volumes of TMD elements as the door opens, was implemented.

3. The heat transfer calculation used was based on performance during the 1973-1974 Waltz Mill test series. A higher value of the ELJAC parameter has been used and an upper bound on calculated heat transfer coefficients has been imposed. (See Reference 19).

4. One hundred percent moisture entrainment was assumed.

5. The Y compressibility factor was assumed.

The analyses consisted of DECL and DEHL breaks in TMD compartments 1 through 6. Figures 6.2.1-9 and 6.2.1-10 are representative of the upper and lower compartment pressure transients that result from a hypothetical double-ended rupture of a reactor coolant pipe for the worst possible location in the lower compartment of the containment; i.e., hot leg and cold leg breaks in element 1.

<u>Initial Pressure Peaks (Assuming unaugmented flow</u>)

The worst case lower compartment breaks (in TMD elements 1-6) are the result of a double-ended guillotine break of a main reactor coolant line. The breaks occur either on the hot leg or cold leg side.

Results of the analysis for the Sequoyah Plant are presented in Table 6.2.1-3. The peak pressures and peak differential pressures resulting from hot and cold leg reactor coolant pipe breaks in each of the six lower compartment control volumes were calculated.

Table 6.2.1-3 presents the maximum calculated pressure peak for the lower compartment elements resulting from hot and cold leg double ended pipe breaks. Generally, the maximum peak pressure within a lower compartment element results when the pipe break occurs in that element. A cold leg break in the element 1 creates the highest pressure peak, also in element 1, of 15.7 psig.

Table 6.2.1-3 also presents the maximum calculated peak pressure in each of the ice condenser sections resulting from any pipe break location. The maximum peak pressure in each of the ice condenser sections is found in the lower plenum element of the section. The peak pressure was calculated to be 11.7 psig in element 40.

Table 6.2.1-3 also presents the maximum calculated differential pressure across the operating deck (divider barrier) between the lower compartment elements and the upper compartment. These values are approximately the same as the maximum calculated differential pressure across the lower crane wall between the lower compartment elements and the dead ended volumes surrounding the lower compartment. The peak differential pressure of 14.9 psi was calculated to be between elements 1 and 25 for a hot leg break.

Table 6.2.1-3 also presents the maximum calculated differential pressures across the upper crane wall between the upper ice condenser elements and the upper compartment. The peak differential of 8.2 psi pressure was calculated to be between element 7-8-9 and 25 and elements 22-23-24 and 25 for a hot leg pipe break.

Initial Pressure Peaks (Assuming a 15% reduction in flow area through the ice condenser)

An additional analysis (see Reference 66) has been performed to determine the effect on short-term containment pressure from a 15% reduction in the flow area through the ice condenser. This analysis was performed to document the effect of the maximum flow area reduction normally expected due to frost and ice accumulation during the course of an operating cycle on the subcompartment pressurization analysis. This 15% flow blockage analysis employs the same assumptions and methods as in the base analysis described above with the exception that a 15% uniform flow area reduction is modeled. This 15% reduction in flow area corresponds to a 6.15 ft^2 reduction in the free flow area of 41.02 ft^2 used for the flow area through each bay of the ice condenser at the elevation of a lattice frame. This flow area was modeled as existing over the entire length of the ice baskets. The breaks which resulted in the highest peak and differential pressures were examined as in the base case analysis discussed above and included a DECL and a DEHL break in element 1. The limiting differential pressures from this analysis are reported in Table 6.2.1-4. The peak short-term containment pressure for the 15% flow blockage analysis was calculated to be 11.9 psig in element 40.

Sensitivity Studies

A series of TMD runs for the D. C. Cook Plant investigated the sensitivity of peak pressures to variations in individual input parameters for the design basis blowdown rate and 100% entrainment. This analysis used a DEHL break in element 6 of the Cook Plant. Table 6.2.1-5 presents the results of this sensitivity study.

The humidity level in the Sequoyah containment at the time of a design basis accident, a double-ended hot leg break in compartment 1, has no significant effect on the initial pressure transient. The difference between peak operating deck pressure differentials calculated by TMD for 100% initial relative humidity and zero initial humidity is less than 0.5%.

Choked Flow Characteristics

The data in Figure 6.2.1-11 illustrate the behavior of mass flow rate as a function of upstream and downstream pressures, including the effects of flow choking. The upper plot shows mass flow rate as a function of upstream pressure for various assumed values of downstream

pressure. For zero back pressure ($P_d = 0$), the entire curve represents choked flow conditions with the flow rate approximately proportional to upstream pressure, P_u. For higher back pressure, the flow rates are lower until the upstream pressure is high enough to provide choked flow. After the increase in upstream pressure is sufficient to provide flow choking, further increases in upstream pressure cause increases in mass flow rate along the curve for $P_d = 0$. The key point in this illustration is that flow rate continues to increase with increasing upstream pressure, even after flow choking conditions have been reached. Thus choking does not represent a threshold beyond which dramatically sharper increases in compartment pressures could be expected because of limitations on flow relief to adjacent compartments.

The phenomenon of flow choking is more frequently explained by assuming a fixed upstream pressure and examining the dependence of flow rate with respect to decreasing downstream pressure. This approach is illustrated for an assumed upstream pressure of 30 psia as shown in the upper plot with the results plotted vs. downstream pressure in the lower plot. For fixed upstream conditions, flow choking represents an upper limit flow rate beyond which further decreases in back pressure will not produce any increase in mass flow rate.

6.2.1.3.4 Containment Pressure Transient - Long Term Analysis

Introduction

Early in the ice condenser development program it was recognized that there was a need for computer modeling of ice condenser containment performance. It was realized that the model would have to have capabilities comparable to those of the dry containment (COCO) model. These capabilities would permit the model to be used to solve problems of containment design and optimize the containment and safeguards systems. This has been accomplished in the development of the LOTIC code. (See Reference 18). Another computer code, MONSTER, with capabilities comparable to those of the LOTIC code has been developed to solve similar containment design problems. (See Reference 63.)

Method of Solution

The model of the containment for the LOTIC computer code consists of five distinct control volumes, the upper compartment, the lower compartment, the portion of the ice bed from which the ice has melted, the portion of the ice bed containing unmelted ice, and the dead ended compartment. The ice condenser control volume with unmelted and melted ice is further subdivided into six subcompartments to allow for maldistribution of break flow to the ice bed.

The conditions in these compartments are obtained as a function of time by the use of fundamental equations solved through numerical techniques. These equations are solved for three distinct phases in time. Each phase corresponds to a distinct physical characteristic of the problem. Each of these phases has a unique set of simplifying assumptions based on test results from the ice condenser test facility. These phases are the blowdown period, the depressurization period, and the long term period.

Blowdown Period

This phase coincides with the blowdown of the reactor coolant system. During this phase no attempt is made to calculate the pressure, flow, and temperature transients in the containment in the LOTIC code. Instead, this complicated analysis is accomplished with the TMD code, a code created specifically for this short term analysis (discussed in 6.2.1.3.3). The pressure and

temperatures in the containment are held constant during this phase. Input values are determined from TMD analyses and compression ratio calculations. Physically, tests at the ice condenser Waltz Mill Test facility have shown that this phase represents that period of time in which the lower compartment air and a portion of the ice condenser air are displaced and compressed into the upper compartment and the remainder of the ice condenser. (The initial pre-blowdown atmosphere in the dead ended compartment is retained at that time.) The code represents this phenomenon through the use of an input value for the fraction of the ice bed which retains air during this phase. This fraction, determined from test data, is also used to establish the volumes of the two ice condenser control volumes, which are held constant during this phase.

The temperatures in the upper and lower compartments are calculated from the input pressure. The portions of the containment which are primarily air-filled, i.e., the dead ended compartment and a portion of the ice bed, are assumed to be at upper compartment temperature during this phase. Deck leakage considerations resulted in consideration of the upper compartment atmosphere as saturated, at this temperature.

Depressurization Period

This phase of the analysis corresponds to the period of time between the end of blowdown and the establishment of a circulation flow between the control volumes. During this phase, the noncondensable nitrogen blowdown from the accumulator occurs, the decay heat boiloff is initiated, and the engineered safeguards come into operation. Maximum decay heat boiloff is achieved by assuming that the safety injection system is disabled to the point that only enough water is delivered to the core to replace the water boiled, and the remaining safety injection is spilled to the sump, (although varying degrees of SIS effectiveness can be simulated). The engineered safeguards which are initiated in this phase are the return fan, the safety injection system, and the spray system. During this phase the spray systems and safety injection system take water from the refueling water storage tank and pump it into the containment. The models for the spray system and heat exchangers are discussed in Subparagraph 6.2.1.3.4. At the beginning of this phase the blowdown ice melt is computed using the blowdown energy. This result is used to compute the actual volume of the melted out portion of the ice condenser, which is used to change the ice condenser volumes from the compressed value associated with the air displacement in the blowdown phase, to the actual value computed from the ice melt. As soon as the return fan is started, the dead ended compartment begins to undergo a conversion to upper compartment atmosphere. This continues until all the dead ended compartment atmosphere has been converted to upper compartment. It is also possible to select an input option in the code such that the dead ended compartment is always treated as upper compartment volume.

As soon as return fan flow is initiated, the lower compartment begins to fill with an air/steam mixture composed of the upper/dead ended compartment air from the fan flow and decay heat boiloff steam. This steam air mixture displaces the previous steam atmosphere of the lower compartment through the ice bed, like the motion of a piston. As this occurs the code calculates the conditions in the upper and lower compartment from the compartment conditions and the spray and flow characteristics. This phase of the analysis ends when the air/steam mixture fills both the lower compartment and the melted out portion of the ice bed.

Long Term

This phase of the analysis begins as soon as the circulation of air through the containment has been established and continues until the problem is terminated. The major occurrences during

this phase are recirculation and ice meltout. Recirculation occurs when the refueling water storage tank has reached its low level and the level in the containment sump has reached high level. At this time the safety injection and spray system begin drawing from the active sump instead of the refueling water storage tank (the two sump model is discussed in Sub- paragraph 6.2.1.3.4). The spray system flow continues to be routed through the spray heat exchanger during this period, and the safety injection and residual spray flows are routed through the residual heat exchanger.

Meltout occurs when there is no longer enough ice in the ice bed to prevent steam from flowing directly from the lower compartment to the upper compartment. As long as there is more than a foot of ice in the ice compartment, the temperatures in the two ice compartment control volumes remain at different constant values which were determined from Waltz Mill test data. When the ice in a subcompartment of the ice bed volume is gone, the subcompartment is assumed to contain lower compartment atmosphere. (Due to maldistribution which is input to the code, the sub-compartments may melt in a sequenced manner rather than simultaneously.) During the long term phase the fan flow from the upper compartment and the flow out of the lower compartment are assumed to be at the respective compartment temperatures.

Primary Assumptions

The most significant simplification of the problem is the assumption that the total pressure in the containment is uniform. This assumption is justified by the fact that after the initial blowdown of the reactor coolant system, the remaining mass and energy released from this system into the containment are small and very slowly changing. The resulting flow rates between the control volumes will also be relatively small. These small flow rates then are unable to maintain significant pressure differences between the compartments.

In the control volumes, which are always assumed to be saturated, steam and air are assumed to be uniformly mixed and at the control volume temperature. When the air return fan is in operation, the fan flow and the reactor coolant system boiloff are mixed before entering the lower compartment. The air is considered a perfect gas, and the thermodynamic properties of steam are taken from the ASME steam table (1975 version).

The condensation of steam is assumed to take place in a condensing node which is located, for the purpose of calculation, between the two control volumes in the ice condenser compartment. The exit temperature of the air leaving this node is set equal to the temperature of the ice filled control volume of the ice storage compartment. Lower compartment exit temperature is used if the ice bed section is melted.

Compression Ratio Analysis

As blowdown continues following the initial pressure peak from a double ended cold leg break, the pressure in the lower compartment again increases, reaching a peak at or before the end of blowdown. The pressure in the upper compartment continues to rise from beginning of blowdown and reaches a peak which is approximately equal to the lower compartment pressure. After blowdown is complete, the steam in the lower compartment continues to flow through the doors into the ice bed compartment and is condensed.

The primary factor in producing this upper containment pressure peak and therefore, in determining design pressure, is the displacement of air from the lower compartment into the

upper containment. The ice condenser quite effectively performs its function of condensing virtually all the steam that enters the ice beds. Essentially, the only source of steam entering the upper containment is from leakage through the drain holes and other leakage around crack openings in hatches in the operating deck separating the lower and upper portions of the containment building.

A method of analysis of the compression peak pressure was developed based on the results of full-scale section tests. This method consists of the calculation of the air mass compression ratio, the polytropic exponent for the compression process, and the effect of steam bypass through the operating deck on this compression.

The compression peak pressure in the upper containment for the Sequoyah plant design is calculated to be 7.18 psig (for an initial air pressure of 0.3 psig). This compression pressure includes the effect of a pressure increase of 0.4 psi from steam bypass and also for the effects of the dead-ended volumes. The nitrogen partial pressure from the accumulators is not included since this nitrogen is not added to the containment until after the compression peak pressure has been reduced, which is after blowdown is completed. This nitrogen is considered in the analysis of pressure decay following blowdown as presented in the long term performance analysis using the LOTIC code. In the following sections, a discussion of the major parameters affecting the compression peak will be discussed. Specifically they are: air compression, steam bypass, blowdown rate and blowdown energy.

Air Compression Process Description

The volumes of the various containment compartments determine directly the air volume compression ratio. This is basically the ratio of the total active containment air volume to the compressed air volume during blowdown. During blowdown air is displaced from the lower compartment and compressed into the ice condenser beds and into the upper containment above the operating deck. It is this air compression process which primarily determines the peak in-containment pressure, following the initial blowdown release. A peak compression pressure of 7.18 psig is based on the Sequoyah Plant design compartment volumes shown in Table 6.2.1-6.

Methods of Calculation and Results

Full Scale Section Tests

The actual Waltz Mill test compression ratios were found by performing air mass balances before the blowdown and at the time of the compression peak pressure, using the results of three special full-scale section tests. These three tests were conducted with an energy input representative of the plant design.

In the calculation of the mass balance for the ice condenser, the compartment is divided into two sub-volumes; one volume representing the flow channels and one volume representing the ice baskets. The flow channel volume is further divided into four sub-volumes, and the partial air pressure and mass in each sub-volume is found from thermocouple readings that the air is saturated with steam at the measured temperature. From these results, the average temperature of the air in the ice condenser compartment is found, and the volume occupied by the air at the total condenser pressure is found from the equation of state.

The compression ratio can then be calculated for the three full-scale section tests. From the results of the air mass balances, it was found that air occupied approximately 64.5% of the ice condenser compartment volume at the time of peak compression.

The final compression volume includes the volume of the upper compartment as well as part of the volume of air in the ice condenser. The results of the full-scale section tests (Figure 6.2.1-12) show a variation in steam partial pressure from 100% near the bottom of the ice condenser to essentially zero near the top. The thermocouples and pressure detectors confirm that at the time when the compression peak pressure is reached steam occupies less than half of the volume of the ice condenser. The analytical model used in defining the containment pressure peak uses upper compartment volume plus 64.5 percent of the ice condenser air volumes as the final volume. This 64.5% value was determined from appropriate test results.

The calculated volume compression ratios are shown in Figure 6.2.1-13, along with the compression peak pressures for these tests. The compression peak pressure is determined from the measured pressure, after accounting for the deck leakage contribution. From the results shown in Figure 6.2.1-13, the polytropic exponent for these tests is found to be 1.13.

Plant Case

For the Sequoyah design, the volume compression ratio, not including the upper plenum as part of the ice condenser and not accounting for dead-ended volume effect, was calculated from Table 6.2.1-6. The peak compression pressure, based on an initial containment pressure of 15.0 psia, was then found to be 21.88 psia or 7.18 psig.

This peak compression pressure includes a pressure increase of 0.4 psi from steam bypass through the deck (see Subparagraph 6.2.1.3.5). The effect of the dead-ended compartment volumes is to trap additional air and thus reduce the compression ratio and the above calculated peak pressure.

Sensitivity To Blowdown Energy

The sensitivity of the upper and lower compartment peak pressure versus blowdown rate as measured from the 1974 Waltz Mill Tests is shown in Figure 6.2.1-14. This figure shows the magnitude of the peak pressure versus the amount of energy released in terms of percentage of RCS energy release rate. Percent energy blowdown rate was selected for the plot because energy flow rate more directly relates to volume flow rate and therefore pressure. There are two important effects to note from the peak upper compartment pressure versus blowdown rate. One, the magnitude of the final peak pressure in the upper compartment is low (about 9 psig) for the plant design DECL blowdown rate; two, even an increase in this rate up to 141 percent of the blowdown energy rate produces only a small increase in the magnitude of this peak pressure (about 1 psi). The major factor setting the peak pressure reached in the upper compartment is the compression of air displaced by steam from the lower compartment into the upper compartment. The lower compartment initial peak pressure shows a relatively low peak pressure of 12.9 psig for the design basis DECL blowdown rate, and even a substantial increase in blowdown energy rate (141 percent reference initial DECL) would cause an increase in initial peak pressure of only 3 psi. The peak pressure in the lower compartment is due mainly to flow resistance caused by displacement of air from the lower compartment into the upper compartment.

For a further discussion, see Section 5 of Reference 21.

Containment Pressure Calculation

The following are the major input assumptions used to calculate the containment transients for the pump suction pipe rupture cases with the steam generators considered as an active heat source for the Sequoyah Nuclear Station Containment:

1. Minimum containment safeguards are employed in all calculations, e.g., one of two spray pumps and one of two spray heat exchangers; one of two RHR pumps and one of two RHR heat exchangers providing flow to the core; one of two safety injection pumps and one of two centrifugal charging pumps; and one of two air recirculation fans.

2. Initial ice weight in the ice condenser as specified in Table 6.2.1-1.

3. The Blowdown, Reflood, and Post-Reflood mass and energy releases described in Section 6.2.1.3.6 are used.

4. Blowdown and post-blowdown ice condenser drain temperature of 190°F and 130°F were used. (These numbers are based on the long-term Waltz Mill ice condenser test data described in Reference 21).

5. Nitrogen from the accumulators in the amount of 3676 lbs. is included in the calculations. Additionally, hydrogen from post-LOCA sources of approximately 94 lbs. two hours after event initiation is included in the calculations.

6. The air recirculation fan is assumed to be effective, approximately 10 minutes after the transient is initiated.

7. Essential service water temperature of 87°F is used on the spray heat exchanger and the component cooling heat exchanger.

8. Even distribution of steam flow into the ice bed is assumed.

9. No ice condenser bypass is assumed. (This assumption depletes the ice in the shortest time and is thus conservative.)

10. The initial conditions in the containment are a temperature of 100°F in the lower and dead-ended volumes, a temperature of 15°F in the ice condenser, and a temperature of 85°F in the upper volume. All volumes are at a pressure of 0.3 psig and a 10% relative humidity, except for the ice condenser which is at a 100% relative humidity.

11. The pump flows vs. time given in Table 6.2.1-7 were used.

12. A residual spray of 1277 gpm is assumed at 1 hour into the accident. Residual heat removal pump and spray pump take suction from the sump, after 1691 seconds, and 3113 seconds respectively.

13. Containment structural heat sinks are assumed with conservatively low heat transfer rates.

14. The Containment compartment volumes were based on the following: Upper Compartment 651,000 ft^3; Lower Compartment 248,500 ft^3; and Dead-Ended Compartment 129,900 ft^3.

15. The operation of one containment spray heat exchanger (UA = $2.953 * 10^6$ Btu/hr-°F), for containment cooling and the operation of one RHR heat exchanger (UA = $1.402 * 10^6$ Btu/hr-°F) for core cooling. The component cooling heat exchanger was modeled at $2.793 * 10^6$ Btu/hr-°F. All heat exchangers were modeled as strictly counterflow heat exchangers.

16. The air return fan returns air at a rate of 40,000 cfm from the upper to the lower compartment.

17. An active sump volume of 38,400 ft^3 is used.

18. 102% of 3411 MWt (i.e., 100.7% of 3455 MWt) power is used in the calculations.

19. Subcooling of ECC water from the RHR heat exchanger is assumed.

20. Nuclear service water flow to the containment spray heat exchanger was modeled as 3400 gpm. Also the nuclear service water flow to the component cooling heat exchanger was modeled as 4000 gpm.

21. The decay heat curve used to calculate mass and energy releases after steam generator equilibration is presented in Table 6.2.1-8.

The minimum time at which the RHR pumps can be diverted to the RHR sprays is specified in the plant operating procedures as 60 minutes after the accident.

Structural Heat Removal

Provision is made in the containment pressure analysis for heat storage in interior and exterior walls. Each wall is divided into a number of nodes. For each node, a conservation of energy equation expressed in finite difference forms accounts for transient conduction into and out of the node and temperature rise of the node for the containment structural heat sinks used in the analysis. The heat sink and material property data used are found in Table 6.2.1-32.

The heat transfer coefficient to the containment structure is based primarily on the work of Tagami (Reference 77). When applying the Tagami correlations, a conservative limit was placed on the lower compartment stagnant heat transfer coefficients. They were limited to a steam-air ratio of 1.4 according to the Tagami correlation. The imposition of this limitation is to restrict the use of the Tagami correlation within the test range of steam-air ratios where the correlation was derived.

With these assumptions, the heat removal capability of the containment is sufficient to absorb the energy releases and still keep the maximum calculated pressure below the design pressure.

Analysis Results

The results of the analysis shows that the maximum calculated containment pressure is 11.44 psig, for the double-ended pump suction minimum safeguards break case. This pressure. peak occurs at approximately 7068 seconds, with ice bed meltout at approximately 3367 seconds.

The following plots show the containment integrity transient, as calculated by the LOTIC-1 code.

Figure 6.2.1-15 Containment Pressure Transient
Figure 6.2.1-16 Temperature Transient for Upper Compartment
Figure 6.2.1-17 Temperature Transient for Lower Compartment
Figure 6.2.1-18 Temperature Transient of the Active Sump and Inactive Sump
Figure 6.2.1-19 Ice Melt versus Time

The following tables have also been provided:

Table 6.2.1-9 Energy accounting until end of reflood
Table 6.2.1-10 Energy accounting at time of ice melt and peak pressure

Relevant Acceptance Criteria

The LOCA mass and energy analysis has been performed in accordance with the criteria shown in the Standard Review Plan (SRP) section 6.2.1.3. In this analysis, the relevant requirements of General Design Criteria (GDC) 50 and 10 CFR Part 50 Appendix K have been included by confirmation that the calculated pressure is less than the design pressure, and because all available sources of energy have been included. These sources include: reactor power, decay heat, core stored energy, energy stored in the reactor vessel and internals, metal-water reaction energy, and stored energy in the secondary system.

The containment integrity peak pressure analysis has been performed in accordance with the criteria shown in the SRP section 6.2.l.1.b, for ice condenser containments. Conformance to GDC's 16, 38, and 50 is demonstrated by showing that the containment design pressure is not exceeded at any time in the transient. This analysis also demonstrates that the containment heat removal systems function to rapidly reduce the containment pressure and temperature in the event of a LOCA.

Conclusions

Based upon the information presented in this report, it may be concluded that operation with an initial ice weight of 1.916 million pounds for the Sequoyah Nuclear Plant is acceptable. Operation with an initial ice mass of 1.916 million pounds results in a calculated peak containment pressure of 11.44 psig, as compared to the design pressure of 12.0 psig. Thus, the most limiting case has been considered, and has been demonstrated to yield acceptable results.

Mark-BW17 Fuel Evaluation

The effect of transitioning to and loading Mark-BW17 fuel on the previously discussed analysis results, which utilized Westinghouse fuel, was evaluated. The important aspects of the fuel change that have the possibility of impacting the analysis include the changes in the flow characteristics past the fuel, the RCS operating T_{avg}, the core-stored energy and fuel-heat capacity, and the decay heat.

There are very small deviations in flow characteristics past the fuel. However, for an ice condenser design, since the peak pressure occurs late in the transient, well after the ice bed has melted out, the single effect of small deviations in flow is insignificant relative to analysis results. Total energy content, or total energy available for release to containment, is significant, which remains unchanged. The RCS T_{avg} remains at 578.2°F.

For the reload core, there is no difference in the mechanical heat capacity of the fuel; however, the core stored energy has increased slightly. The increase was evaluated, and it was determined to have an increased energy effect of 132,000 BTUs. However, the Tech-Spec ice mass based on the Reference 72 analysis contains an additional 384 Lbms of ice due to roundoff. The increase in core stored energy is offset by the roundoff in the Tech-Spec operational limit. Therefore, the Reference 72 analysis bounds operation with reloads having up to 96 fresh Mark-BW17 fuel assemblies.

The metric tons of Uranium, the enrichment, and the fuel reload cycle utilized in the current analysis remain bounding for the B&W fuel. Therefore, the Sequoyah-specific decay heat curve remains bounding.

In summary, the effect of including Mark-BW17 Fuel on the current LOCA M&E and the containment integrity analysis has been evaluated. It has been concluded that the current analysis results remain bounding.

HTP Fuel Evaluation

The inputs/features that are of primary importance in containment analyses are evaluated individually below for operation with Advanced W17 HTP fuel:

- Initial system mass inventory and energy content
- break mass and energy release rates
- structural inputs such as compartment volumes and containment structure mass
- structural heat content and decay heat
- safety systems that include containment sprays, fans, and the ice condenser

The effect of Advanced W17 HTP fuel on initial system inventory and energy content, break flows, and containment structural and safety system inputs used in containment analyses were evaluated. The Advanced W17 HTP fuel has been shown to have no significant effect on these inputs. Existing containment analyses, therefore, remain applicable with the implementation of the Advanced W17 HTP fuel.

There is a minor increase to the LBLOCA long-term containment temperature profile when coupled with loss of downstream dam (670' to 639' elevation). The loss of dam event gradually reduces the river head which in turn eventually decreases ERCW flow approximately 7%. For this scenario, long-term containment cooling begins after the reservoir level has decreased below the minimum analysis elevation 670'; this time is more than 2 hours after the peak containment temperature and pressure have already occurred. The increase in long-term containment temperature is estimated to be 3°F (based on the design input to the 1988 UHS technical specification change). The 3°F increase should only be applied to the temperatures shown in Figures 6.2.1-16 and 6.2.1-17 after approximately 10E3 seconds.

6.2.1.3.5 Effect of Steam Bypass

The sensitivity of the compression peak pressure to deck bypass is shown in Figure 6.2.1-22, which shows that an increase in deck bypass area of 50 percent would cause an increase of about 0.2 psi in final peak compression pressure. Also, it is important to note that the plant final peak compression pressure of 7.18 psig already includes a contribution of 0.4 psi from the plant deck bypass area of 5 ft^2.

This effect of deck leakage on upper containment pressure has been verified by a series of four special, full-scale section tests. These tests were all identical except different size deck leakage areas were used.

The results of these tests are given in Figure 6.2.1-23 which includes two curves of test results. Each curve shows the difference in upper compartment pressure between one test and another resulting from a difference in deck leakage area. One curve shows the increase in upper compartment pressure at the end of the boiler blowdown (after the compression peak pressure, at about 50 seconds in these tests), and the second curve shows the increase in upper compartment peak pressure (at about 10 seconds in these tests). It should be noted that the pressure at the end of the blowdown is less than the peak compression ratio pressure occurring at about 10 seconds for reference blowdown test.

The containment pressure increase due to deck leakage is directly proportional to the total amount of steam leakage into the upper compartment, and the amount of this steam leakage is, in turn, proportional to the amount of steam released from the boiler, less the inventory of steam remaining in the lower compartment. Notably, the increase in upper compartment compression peak pressure is substantially less than the upper compartment pressure increase at the end of blowdown, because the peak compression pressure occurs before the boiler has released all of its energy, and measured increase in peak compression pressure due to increased deck leakage,

is proportionately reduced. For the case of the plant design, the final peak compression pressure is conservatively assumed to occur when the reactor coolant system release is 75 percent of its total energy. This value is selected as a reference value, based on the results of a number of tests conducted with different blowdown rates and total energy releases, as shown in Figure 6.2.1-24. The actual deck leakage coefficient is therefore,

$$\frac{\Delta P_3}{A_{deck}} = 0.107 \times 0.75 = 0.080 \text{ psi/ft}^2$$

The divider barrier including the enclosures over the pressurizer, steam generators and reactor vessel, is designed to provide a reasonably tight seal against leakage. Holes are purposely provided in the bottom of the refueling cavity to allow water from sprays in the upper compartment to drain to the sump in the lower compartment. Potential leakage paths exist at all the joints between the operating deck and the pump access hatches and reactor vessel enclosure slabs. The total of all deck leakage flow areas is approximately 5 square feet. The effect of this potential leakage path is small and is found to be:

$$\Delta P_{deck} = 5 \times 0.080 = 0.4 \text{ psi}$$

In the event that the Reactor Coolant System break flow is so small that it would leak through these flow paths without developing sufficient differential pressure (1 lb/ft^2) to open the ice condenser doors, steam from the break would slowly pressurize the containment. The Containment Spray System has sufficient capacity to maintain pressure well below design for this case.

The method of analysis used to obtain the maximum allowable deck leakage capacity as a function of the primary system break size is as follows:

During the blowdown transient, steam and air flow through the ice condenser doors and also through the deck bypass area into the upper compartment. For the containment, this bypass area is composed of two parts, a known leakage area of approximately 2.0 ft^2 with a geometric loss coefficient of 1.5 through the deck drainage holes location at the bottom of the refueling canal and an undefined deck leakage area with a conservatively small loss coefficient of 2.5. A resistance network similar to

that used in TMD is used to represent 6 lower compartment volumes each with a representative portion of the deck leakage, and the lower inlet door flow resistance and flow is calculated for small breaks that would only partially open these doors. The coolant blowdown rate as a function of time is used with this flow network to calculate the differential pressures on the lower inlet doors and across the operating deck.

The resultant deck leakage rate and integrated steam leakage into the upper compartment is then calculated. The lower inlet doors are initially held shut by the cold head of air behind the doors (approximately one pound per square foot). The initial blowdown from a small break opens the doors and removes the cold head on the doors. With the door differential removed, the door position is slightly open. An additional pressure differential of one pound per square foot is then sufficient to fully open the doors. The nominal door opening characteristics are based on test results.

One analysis conservatively assumed that flow through the postulated leakage paths is pure steam. During the actual blowdown transient, steam and air representative of the lower compartment mixture leak through the holes, thus less steam would enter the upper compartment. If flow were considered to be a mixture of liquid and vapor, the total leakage mass would increase, but the steam flow rate would decrease. The analysis also assumed that no condensing of the flow occurs due to structural heat sinks. The peak air compression in the upper compartment for the various break sizes is assumed with the steam mass added to this value to obtain the total containment pressure. Air compression for the various break sizes is obtained from previous full-scale section tests conducted at Waltz Mill.

The allowable leakage area for the following Reactor Coolant System (RCS) break sizes was determined: DE, 0.6 DE, 3 ft^2, 10 inch diameter, 6 inch diameter, 2 inch diameter and 0.5 inch diameter. The allowable deck leakage area for the DE break was based on the test results previously discussed. For break sizes of 3 ft^2 and 0.6 DE, a series of deck leakage sensitivity studies were made to establish the total steam leakage to the upper compartment over the blowdown transient. This steam was added to the peak compression air mass in the upper compartment to calculate a peak pressure. Air and steam were assumed to be in thermal equilibrium, with the air partial pressure increased over the air compression value to account for heating effects. For these breaks, sprays were neglected. Reduction in compression ratio by return of air to the lower compartment was conservatively neglected. The results of this analysis are shown in Table 6.2.1-12. This analysis is confirmed by Waltz Mill tests conducted with various deck leaks equivalent to over 50 ft^2 of deck leakage for the double-ended blowdown rate and is shown in Figure 6.2.1-23.

For breaks of 10 inch diameter and smaller, the effect of containment sprays was included. The method used is as follows: For each time step of the blowdown, the amount of steam leaking into the upper compartment was calculated to obtain the steam mass in the upper compartment. This steam was mixed with the air in the upper compartment, assuming thermal equilibrium with air. The air partial pressure was increased to account for air heating effects. After sprays were initiated, the pressure was calculated based on the rate of accumulation of steam in the upper compartment.

This analysis was conducted for the 10 inch, 6 inch and 2 inch break sizes, assuming one spray pump operated (4750 gpm at 100°F). As shown in Table 6.2.1-12, the 10 inch break is the limiting case for this range of break sizes.

A second, more realistic, method was used to analyze the 10 inch, 6 inch, and 2 inch breaks. This analysis assumed a 30 percent air 70 percent steam mixing flowing through the deck leakage area. This is conservative considering the amount of air in the lower compartment during this portion of the transient. Operation of the deck fan increases the air content of the lower compartment, thus increasing the allowable deck leakage area. Based on the LOTIC code analysis, a structural heat removal rate of over 6000 BTU/sec from the upper compartment is indicated [Reference 30]. Therefore, a steam condensation rate of 6 lbs/sec was used for the upper compartment. The results indicate that with one spray pump operating and a deck leakage area of 50 ft^2, the peak containment pressure is below design pressure.

The 1/2 inch diameter break is not sufficient to open the ice condenser inlet doors. For this break, the upper compartment spray is sufficient to condense the break steam flow.

In conclusion, it is apparent that there is a substantial margin between the design deck leakage area of 5 ft^2 and that which can be tolerated without exceeding containment design pressure.

6.2.1.3.6 Transient Phase Analyses

Blowdown Analysis (Short Term)

Mass and energy release rate transients generated for the TMD pressure calculation are supported by an extensive investigation of short term blowdown phenomena. The SATAN-V, WCAP 7750 (Reference 62), code was used to predict early blowdown transients. The study concerned then a verification of the conservatism of the SATAN-V calculated transients. This verification was accomplished through two approaches: a review of the validity of the SATAN-V break model, and a parametric study of significant physical assumptions.

The SATAN-V code uses a control volume approach to model the behavior of the Reactor Coolant System resulting from a large break in a main coolant pipe. Release rate transients are determined by the SATAN-V break model which includes a critical flow calculation and an implicit representation of pressure wave propagation.

The SATAN-V critical flow calculation employs appropriately defined critical flow correlations applied for fluid conditions at the break element. For the early portion of blowdown, subcooled, saturated and two phase critical flow regimes are encountered. SATAN-V uses the Moody (Reference 1) correlation for saturated and two phase fluid conditions and a slight modification of the Zaloudek (Reference 2) correlation for the subcooled blowdown regime.

Since most short term blowdown transients are characterized by a peak mass and energy release rate that occurs during a subcooled condition, the Zaloudek application is particularly significant. The Zaloudek correlation is modified to merge to Moody predicted mass velocities at saturation in the break element. This correlation appears in the critical flow routine of SATAN-V.

Comparison to Other Critical Flow Models

The Henry-Fauske critical flow correlation was considered for comparison (References 3, 4, 5). This correlation models flow nonequilibrium via an approach which includes an empirical parameter. This parameter describes the deviation from equilibrium mass transfer and depends on flow geometry.

The value is selected for a particular configuration based on the range of throat equilibrium qualities. The value for constant area ducts is used in the present analysis. This choice is based on the worst possible double ended break geometry described below.

For cold leg and hot leg breaks, the majority of the flow, about 65%, comes from the vessel side of the break. For this side, the geometry may be described as an entrance nozzle and a straight pipe of approximate 12 feet in length and with a diameter of 29 inches. This length of pipe represents the distance from the reactor vessel to the periphery of the biological shield. No double ended break can occur within the biological shield because of the restricted movement within the pipe annulus. Hence the constant area value is appropriate.

Like the SATAN-V model, the Henry-Fauske correlation yields a G_{crit} in terms of upstream conditions and like the SATAN-V model it also exhibits a steeper slope of the G vs. P line for subcooled conditions. The Henry-Fauske saturated liquid line is below the Moody saturated line (SATAN-V model) for pressure greater than about 1000 psia. For short term blowdown calculations, the significant pressure region is from 1000 psia to 1800 psia, with increased emphasis on subcooled conditions for the 1000 psia end. Subcooled mass velocity versus pressure is calculated for two fluid temperatures corresponding to P_{sat} = 1000 and P_{sat} = 1800. The slope of the Zaloudek G vs. P line is steeper in both cases. This increased sensitivity coupled with the higher value for Moody at saturation causes the SATAN-V model to predict higher mass velocities. Hence the SATAN-V model is a more conservative treatment of critical flow than the Henry-Fauske model.

In the original FLASH model (Reference 6), the Moody correlation was extended to subcooled conditions. This treatment is employed in many blowdown codes and thus it is appropriate to compare the SATAN-V model to these values. Again the Zaloudek treatment yields higher mass velocities and the SATAN-V model is more conservative.

Comparison To Experimental Data

The margin included in the modified Zaloudek prediction of subcooled critical flow rates is demonstrated by a review of experimental subcooled critical flow data (References 2,7). The review indicates that when the modified correlation is applied to Zaloudek's data, the predicted critical flow values are significantly higher than measured flow rates.

The margin associated with the SATAN-V critical flow calculation may also be demonstrated by a review of the low quality data presented by Henry (Reference 5). Exit plane quality, in terms of the Moody model, is determined as a function of upstream conditions by assuming an isentropic expansion to exit plane (i.e. critical) pressure. The lowest exit plane qualities where the Moody model is applied in the SATAN-V code occur for expansion from saturated liquid conditions. The Moody model is used in the SATAN-V code when that model gives higher exit plane quality, otherwise the Modified Zaloudek model is used.

Henry's comparison between data and model shows that for the range of exit plane quality greater than 0.02, the Moody model overpredicts the data, hence is conservative.

For the region below 0.02, it is appropriate to compare Henry's results with the Modified Zaloudek model, as used in the SATAN-V code. It can be shown that the Zaloudek model overpredicts the flow. A discharge coefficient of 0.6 would be more reasonable than the 1.0 value used in SATAN-V.

Application to Transient Conditions

The Zaloudek correlation was developed for stagnation (reservoir) pressure and quasi steady state critical flow conditions. It is extended to application in the SATAN-V break element and transient flow conditions. This extension is justified because of the following considerations.

The pressure in the break element differs from the value in a nearby large volume because of three effects:

1. Pressure drop due to friction
2. Pressure drop due to spatial acceleration (momentum flux)
3. Pressure drop due to the transient

The friction term in the reactor application is quantifiable; this term is less important than the other two. The sensitivity of the break flow rate to fluid friction was evaluated via a parametric study. For the purposes of this study, an analysis was made wherein the frictional resistance between the vessel and the break was reduced from the design values by a factor of one hundred. Over the period from 0.0 to 60 milliseconds (which includes the peak break flow), the integrated mass flow differed by less than 18 lbs from the design friction case; the total release over this period was about 5000 lbs.

Spatial acceleration is the major source of pressure drop upstream of the break between the reservoir and the pipe, causing steep pressure gradients in the approach region to critical flow. This term is not calculated explicitly in the SATAN-V code. Spatial acceleration is accounted for by the use of critical flow correlations (Zaloudek or Moody) which contain this effect. No credit is taken for pressure drop due to spatial acceleration for elements other than the break element. Hence the pressure calculated by SATAN-V may be interpreted as a stagnation pressure which is the appropriate pressure for the Zaloudek and Moody models.

Prior to the occurrence of the peak release rate, the break element and upstream reservoir pressures differ as a result of the transient described by pressure wave propagation. The applicability of the SATAN-V break model to this situation is verified by the code's ability to match recorded semi scale transients. SATAN simulations of LOFT transients support the SATAN-V transient calculation. When the LOFT pressure transient recorded near the break is compared to the SATAN-V model of the LOFT break element transient, the ability of the SATAN-V Code to track pressure waves in the broken pipe is demonstrated.

Moreover, the critical flow correlation is implemented in the present analysis by combining the correlation with the appropriate momentum equation. This provides a model for predicting break flow acceleration vis-a-vis a quasi-steady simulation. This is found to have little effect on containment pressure but is a more physical representation.

Thus the SATAN-V break model is supported by subcooled critical flow data, by comparison to other correlations, and ability to simulate short term transients.

Parametric Studies

With confirmation of the conservatism of the SATAN-V break model, a series of parametric studies were undertaken to identify the blowdown transient corresponding to the most severe TMD results. A series of basic sensitivities were first studied to set the scope of the more detailed investigations. The assumptions of break size, break type and break location were considered. The results of the analysis were evaluated using the TMD code.

Break Size, Type and Location

The influence of break location on TMD peak pressure was considered by generating blowdown transients for possible worst break locations. The results indicated that a double ended break in the pump suction leg was clearly less severe for short term blowdown release rates and that no such clear decision could be made between hot and cold leg breaks.

More detailed parametric studies were continued for the cold leg and the hot leg double ended guillotine breaks. The two locations produce intrinsically different TMD pressure responses and therefore must be dealt with in separate parametric surveys.

Hot Leg Nodal Configuration

A study of the SATAN-V nodal configuration has been applied to the hot leg double ended guillotine break. It was found that for this break the nodal configuration of the broken hot leg and the upper plenum are significant to short term transients. Spatial convergence was achieved for the upper plenum after the addition of four nodes to the Standard SATAN-V two node upper plenum model. These nodes are hemispherical shells arranged concentrically from the broken hot leg nozzles and approximate the propagation of the pressure wave in the upper plenum. They are significant in that they specify the inertial response of the upper plenum. Spatial convergence was demonstrated because doubling the number of nodes yielded less than one percent deviation in break flow at all times.

Sensitivity to nodal configuration in the broken hot leg pipe was also investigated. Models with from 4 to 16 nodes were used to generate transients.

Increasing the number of nodes was found to give a better simulation of pressure wave propagation in the pipe.

Cold Leg Studies

The cold leg break transient was also reviewed in terms of significant parameters.

The Reactor Coolant System behavior is different for cold leg breaks and the peak containment pressure occurs later for cold leg breaks. The following studies were performed.

Nodal Configuration

For the cold leg break the nodal configuration of the broken cold leg and the downcomer is significant to the transient. Spatial convergence was achieved with the addition of three nodes to the standard SATAN-V model. These are annular rings arranged concentrically from the broken cold leg nozzle and model propagation of the pressure wave in the downcomer.

As in the hot leg sensitivity, from 4 to 16 pipe node models were tried for the cold leg transient. Again, more nodes give a better simulation of pressure wave propagation in the broken pipe.

Pump Modeling

For the time period of interest, the variation in pump inlet density is small and the variation in pump speed is small. This model was found to have no effect.

Summary

From the hot leg and cold leg studies, the design basis mass and energy release rates have been finalized. The mass and energy release rate transients for all the design cases are given in Figures 6.2.1-25 through 6.2.1-34. All cases are generated from the SATAN-V break model consisting of Moody-Modified Zaloudek critical flow correlations applied at the break element. Since no mechanistic constraints have been established for full guillotine pipe rupture, instantaneous pipe severance and disconnection is assumed for all transients. Assumptions specific to the presented transients are as follows:

For the hot leg mass and energy release rate transient to loop compartments:

Figures 6.2.1-25 and 6.2.1-26

1. A double ended guillotine type break.
2. A break located just outside the biological shield.
3. A break located in the worst loop.
4. A six node upper plenum model.
5. A 16 node broken hot leg pipe model.
6. A discharge coefficient (C_D) equal to 1.0
7. A 100% power condition with T_{hot} = 634.7°F and T_{cold} = 545.1°F

For the cold leg mass and energy release rate transient to loop compartments:

Figures 6.2.1-27 and 6.2.1-28

1. A double ended guillotine type break.
2. A break located just outside the biological shield
3. A break located in the worst loop.
4. A seven node downcomer model.
5. A 16 node broken cold leg pipe model.
6. A discharge coefficient (C_D) equal to 1.0
7. A full power condition with T_{hot} = 634.7°F and T_{cold} = 545.1°F

For hot leg mass and energy release rate transients to subcompartments:

Figures 6.2.1-29 and 6.2.1-30

1. A single ended split type break.
2. A break just outside the hot leg nozzle.
3. A break in the pressurizer loop.
4. A six node upper plenum model.
5. A 16 node broken hot leg pipe model.
6. A discharge coefficient (C_D) equal to 1.0
7. A full power condition T_{hot} = 634.7°F and T_{cold} = 545.1°F

For the cold leg mass and energy release rate transient to subcompartments:

Figures 6.2.1-31 and 6.2.1-32

1. A single ended split type break.
2. A break just outside the cold leg nozzle.

3. A break in the pressurizer loop.
4. A seven node downcomer model.
5. A 16 node broken cold leg pipe model.
6. A discharge coefficient (C_D) equal to 1.0
7. A full power condition T_{hot} = 634.7°F and T_{cold} = 545.1°F

For the mass and energy release rate transient to the pressurizer enclosure a 6 inch safety valve pipe break was considered (Figures 6.2.1-33 and 6.2.1-34).

1. A guillotine type break modelled as a 0.147 ft^2 split in the cold leg at the pump discharge (area of the six inch pressurizer spray feed line) and a 0.087 ft^2 split in the top of the pressurizer (area of 4 inch spray nozzle).

2. Valves in spray line are assumed to be open

3. No pipe resistance for the feed line considered

4. A full power condition T_{hot} = 634.7°F and T_{cold} = 545.1°F

5. A discharge coefficient (C_D) equal to 1.0

LONG TERM LOCA MASS AND ENERGY RELEASE ANALYSIS

The evaluation model used for the long term LOCA mass and energy release calculations was the March 1979 model described in Reference 64. This evaluation model has been reviewed and approved by the NRC, and has been used in the analysis of other ice condenser plants.

This report section presents the long term LOCA mass and energy releases that were generated in support of the Sequoyah Nuclear Plant Units 1 and 2 ice weight optimization program. These mass and energy releases are then subsequently used in the LOTIC-1 computer code for containment integrity analysis peak pressure calculations.

LOCA Mass and Energy Release Phases

The containment system receives mass and energy releases following a postulated rupture in the RCS. These releases continue over a time period, which, for the LOCA mass and energy analysis, is typically divided into four phases:

1. Blowdown - the period of time from accident initiation (when the reactor is at steady state operation) to the time that the RCS and containment reach an equilibrium state at containment design pressure.

2. Refill - the period of time when the lower plenum is being filled by accumulator and ECCS water. At the end of blowdown, a large amount of water remains in the cold legs, downcomer, and lower plenum. To conservatively consider the refill period for the purpose of containment mass and energy releases, it is assumed that this water is instantaneously transferred to the lower plenum along with sufficient accumulator water to completely fill the lower plenum. This allows an uninterrupted release of mass and energy to containment. Thus, the refill period is conservatively neglected in the mass and energy release calculation.

3. Reflood - begins when the water from the lower plenum enters the core and ends when the core is completely quenched.

4. Post-reflood (FROTH) - describes the period following the reflood transient. For the pump suction break, a two-phase mixture exits the core, passes through the hot legs, and is superheated in the steam generators. After the broken loop steam generator cools, the break flow becomes two phase.

Computer Codes

The Reference 64 mass and energy release evaluation model is comprised of mass and energy release versions of the following codes: SATAN VI, WREFLOOD, and FROTH. These codes were used to calculate the long term LOCA mass and energy releases for the Sequoyah Nuclear Plant Units 1 and 2.

SATAN calculates blowdown, the first portion of the thermal-hydraulic transient following break initiation, including pressure, enthalpy, density, mass and energy flowrates, and energy transfer between primary and secondary systems as a function of time.

The WREFLOOD code addresses the portion of the LOCA transient where the core reflooding phase occurs after the primary coolant system has depressurized (blowdown) due to the loss of water through the break and when water supplied by the Emergency Core Cooling refills the reactor vessel and provides cooling to the core. The most important feature is the steam/water mixing model (See Reflood Mass and Energy Data section).

FROTH models the post-reflood portion of the transient. The FROTH code is used for the steam generator heat addition calculation from the broken and intact loop steam generators.

Break Size and Location

Generic studies have been performed with respect to the effect of postulated break size on the LOCA mass and energy releases. The double ended guillotine break has been found to be limiting due to larger mass flow rates during the blowdown phase of the transient. During the reflood and FROTH phases, the break size has little effect on the releases.

Three distinct locations in the reactor coolant system loop can be postulated for pipe rupture:

1. Hot leg (between vessel and steam generator)
2. Cold leg (between pump and vessel)
3. Pump suction (between steam generator and pump)

The break location analyzed for the Ice Optimization Program is the pump suction double ended rupture guillotine, DEPSG (10.46 ft^2). Break mass and energy releases have been calculated for the blowdown, reflood, and post-reflood phases of the LOCA for each case analyzed. The following information provides a discussion on each break location.

The hot leg double ended rupture has been shown in previous studies to result in the highest blowdown mass and energy release rates. Although the core flooding rate would be the highest for this break location, the amount of energy released from the steam generator secondary is minimal because the majority of the fluid which exits the core bypasses the steam generators venting directly to containment. As a result, the reflood mass and energy releases are reduced significantly as compared to either the pump suction or cold leg break locations where the core exit mixture must pass through the steam generators before venting through the break. For the hot leg break, generic studies have confirmed that there is no reflood peak (i.e., from the end of

the blowdown period, the containment pressure would continually decrease). The mass and energy releases for the hot leg break have not been included in the scope of this containment integrity analysis because for the hot leg break only the blowdown phase of the transient is of any significance. Since there are no reflood and post-reflood phases to consider, the limiting peak pressure calculated would be the compression peak pressure and not the peak pressure following ice bed meltout.

The cold leg break location has also been found in previous studies to be much less limiting in terms of the overall containment energy releases. The cold leg blowdown is faster than that of the pump suction break, and more mass is released into the containment. However, the core heat transfer is greatly reduced, and this results in a considerably lower energy release into containment. Studies have determined that the blowdown transient for the cold leg is, in general, less limiting than that for the pump suction break. During reflood, the flooding rate is greatly reduced and the energy release rate into the containment is reduced. Therefore; the cold leg break is not included in the scope of this program.

The pump suction break combines the effects of the relatively high core flooding rate, as in the hot leg break, and the addition of the stored energy in the steam generators. As a result, the pump suction break yields the highest energy flow rates during the post-blowdown period by including all of the available energy of the Reactor Coolant System in calculating the releases to containment. This break has been determined to be the limiting break for all ice condenser plants.

In summary, the analysis of the limiting break location for an ice condenser containment has been performed and is shown in this report. The double-ended pump suction guillotine break has historically been considered to be the limiting break location, by virtue of its consideration of all energy sources in the Reactor Coolant System (RCS). This break location provides mechanism for the release of the available energy in the RCS, including both the broken and intact loop steam generators.

Application of Single Failure Criteria

An analysis of the effects of the single failure criteria has been performed on the mass and energy release rates for the pump suction (DEPS) break. An inherent assumption in the generation of the mass and energy release is that offsite power is lost. This results in the actuation of the emergency diesel generators, required to power the safety injection system. This is not an issue for the blowdown period which is limited by the compression peak pressure.

The limiting minimum safety injection case has been analyzed for the effects of a single failure. In the case of minimum safeguards, the single failure postulated to occur is the loss of an emergency diesel generator. This results in the loss of one pumped safety injection train, i.e., ECCS pumps and heat exchangers.

System Characteristics and Modeling Assumptions

The mass and energy release analysis is sensitive to the assumed characteristics of various plant systems, in addition to other key modeling assumptions. Some of the most critical items are the: RCS initial conditions, core decay heat, safety injection flow, and metal and steam generator heat release modeling. Specific assumptions concerning each of these items are discussed below. Table 6.2.1-1 presents key data assumed in the analysis.

For the long term mass and energy release calculations, operating temperatures to bound the highest average coolant temperature range were used as bounding analysis conditions. The modeled core rated power of 3455 MWt adjusted for calorimetric error (+0.7 percent of power) was the basis in the analysis. The use of higher temperatures is conservative because the initial fluid energy is based on coolant temperatures which are at the maximum levels attained in steady state operation. Additionally, an allowance of +5.5 ^{0}F is reflected in the RCS temperatures in order to account for instrument error and deadband. The initial RCS pressure in this analysis is based on a nominal value of 2250 psia. Also included is an allowance of +50 psi, which accounts for the measurement uncertainty on pressurizer pressure. The selection of 2250 psia as the limiting pressure is considered to affect the blowdown phase results only, since this represents the initial pressure of the RCS. The RCS rapidly depressurizes from this value until the point at which it equilibrates with containment pressure.

The rate at which the RCS blows down is initially more severe at the higher RCS pressure. Additionally, the RCS has a higher fluid density at the higher pressure (assuming a constant temperature) and subsequently has a higher RCS mass available for releases. Thus, 2300 psia initial pressure was selected as the limiting case for the long term mass and energy release calculations. These assumptions conservatively maximize the mass and energy in the RCS.

The selection of the fuel design features for the long term mass and energy calculation is based on the need to conservatively maximize the core stored energy. The margin in core stored energy was chosen to be +15 percent. Thus, the analysis very conservatively accounts for the stored energy in the core. The fuel conditions were adjusted to provide a bounding analysis for current Sequoyah Nuclear Plant Units 1 and 2 fuel features. The following items serve as the basis to ensure conservatism in the core stored energy calculation: a conservatively high reload core loading; time of maximum fuel densification, i.e., highest BOL temperatures; and irradiated fuel assemblies are assumed to have an average burnup >15000 MWD/MTU.

Margin in RCS volume of 3% (which is composed of 1.6% allowance for thermal expansion and 1.4% for uncertainty) is modeled.

Regarding safety injection flow, the mass and energy calculation considered the historically limiting configuration of minimum safety injection flow.

The following assumptions were employed to ensure that the mass and energy releases are conservatively calculated, thereby maximizing energy release to containment:

1. Maximum expected operating temperature of the reactor coolant system (100% full power conditions.

2. An allowance in temperature for instrument error and dead band was assumed (+5.5 degrees F).

3. Margin in volume of 3% (which is composed of 1.6% allowance for thermal expansion, and 1.4% for uncertainty).

4. Core rated power of 3455 MWt.

5. Allowance for calorimetric error (+0.7 percent of power).

6. Conservative coefficient of heat transfer (i.e., steam generator primary/secondary heat transfer and reactor coolant system metal heat transfer).

7. Allowance in core store energy for effect of fuel densification.

8. A margin in core stored energy (+15 percent included to account for manufacturing tolerances).

9. An allowance for RCS initial pressure uncertainty (+50 psi).

10. A maximum containment backpressure equal to design pressure.

11. The steam generator metal mass was modeled to include only the portion of the steam generators (SG) which is in contact with the fluid on the secondary side. Portions of the SGs such as the elliptical head, upper shell and miscellaneous internals have poor heat transfer due to location. The heat stored in these areas available for release to containment will not be able to effectively transfer energy to the RCS, thus the energy will be removed at a much slower rate and time period (>10000 seconds).

12. A provision for modeling steam flow in the secondary side through steam generator turbine stop valve was conservatively addressed only at the start of the event. Turbine stop valve isolation time equal to 1.19 seconds was considered.

13. As noted in Section 2.4 of Reference 64, the option to provide more specific modeling pertaining to decay heat has been exercised to specifically reflect the Sequoyah Units 1 and 2 core heat generation, while retaining the two sigma uncertainty to assure conservatism.

14. Steam generator tube plugging leveling (0% uniform).

    - Maximizes reactor coolant volume and fluid release
    - Maximizes heat transfer area across the SG tubes
    - Reduces coolant loop resistance, which Δp upstream of break and increases break flow

Thus, based on the previously noted conditions and assumptions, a bounding analysis of Sequoyah Units 1 and 2 is made for the release of mass and energy from the RCS in the event of a LOCA to support ice weight optimization.

MASS AND ENERGY RELEASE DATA

Blowdown Mass and Energy Release Data

A version of the SATAN-VI code is used for computing the blowdown transient, which is the code used for Emergency Core Cooling System (ECCS) calculation in Reference 78.

The code utilizes the control volume (element) approach with the capability for modeling a large variety of thermal fluid system configurations. The fluid properties are considered uniform and thermodynamic equilibrium is assumed in each element. A point kinetics model is used with weighted feedback effects. The major feedback effects include moderator density, moderator

temperature and Doppler broadening. A critical flow calculation for subcooled (modified Zaloudek), two-phase (Moody), or superheated break flow is incorporated into the analysis. The methodology for the use of this model is described in Reference 64.

Table 6.2.1-13 presents the calculated mass and energy releases for the blowdown phase of the DEPSG break. For the pump suction breaks, break path 1 in the mass and energy release tables refers to the mass and energy exiting from the steam generator side of the break; break path 2 refers to the mass and energy exiting from the pump side of the break.

Reflood Mass and Energy Release Data

The WREFLOOD code used for computing the reflood transient, is a modified version of that used in the 1981 ECCS evaluation model, Reference 78.

The WREFLOOD code consists of two basic hydraulic models - one for the contents of the reactor vessel, and one for the coolant loops. The two models are coupled through the interchange of the boundary conditions applied at the vessel outlet nozzles and at the top of the downcomer. Additional transient phenomena such as pumped safety injection and accumulators, reactor coolant pump performance, and steam generator release are included as auxiliary equations which interact with the basic models as required. The WREFLOOD code permits the capability to calculate variations during the core reflooding transient of basic parameters such as core flooding rate, core and downcomer water levels, fluid thermodynamic conditions (pressure, enthalpy, density) throughout the primary system, and mass flow rates through the primary system. The code permits hydraulic modeling of the two flow paths available for discharging steam and entrained water from the core to the break; i.e., the path through the broken loop and the path through the unbroken loops. The 19 element model schematic used in this analysis is shown in Figure 6.2.1-83.

A complete thermal equilibrium mixing condition for the steam and emergency core cooling injection water during the reflood phase has been assumed for each loop receiving ECCS water. This is consistent with the usage and application of the Reference 64 mass and energy release evaluation model in recent analyses, e.g., D. C. Cook Docket (Reference 79). Even though the Reference 64 model credits steam/mixing on the intact loop and not in the broken loop, justification, applicability, and NRC approval for using the mixing model in the broken loop has been documented (Reference 79). This assumption is justified and supported by test data, and is summarized as follows:

The model assumes a complete mixing condition (i.e., thermal equilibrium) for the steam/water interaction. The complete mixing process, however, is made up of two distinct physical processes. The first is a two phase interaction with condensation of steam by cold ECCS water. The second is a single phase mixing of condensate and ECCS water. Since the steam release is the most important influence to the containment pressure transient, the steam condensation part of the mixing process is the only part that need be considered. (Any spillage directly heats only the sump.)

The most applicable steam/water mixing test data has been reviewed for validation of the containment integrity reflood steam/water mixing mode. This data is that generated in 1/3 scale tests (Reference 80), which are the largest scale data available and thus most clearly simulates the flow regimes and gravitational effects that would occur in a PWR. These tests were designed specifically to study the steam/water interaction for PWR reflood conditions.

From the entire series of 1/3 scale tests, a group corresponds almost directly to containment integrity reflood conditions. The injection flowrates for this group cover all phases and mixing conditions calculated during the reflood transient. The data for these tests were reviewed and discussed in detail in Reference 64. For all of these tests, the data clearly indicate the occurrence of very effective mixing with rapid steam condensation. The mixing model used in the containment integrity reflood calculation is therefore wholly supported by the 1/3 scale steam/water mixing data.

Additionally, the following justification is also noted. The post-blowdown limiting break for the containment integrity peak pressure analysis is the pump suction double ended rupture break. For this break, there are two flowpaths available in the RCS by which mass and energy may be released to containment. One is through the outlet of the steam generator, the other via reverse flow through the reactor coolant pump. Steam which is not condensed by ECCS injection in the intact RCS loops passes around the downcomer and through the broken loop cold leg and pump in venting to containment. This steam also encounters ECCS injection water as it passes through the broken loop cold leg, complete mixing occurs and a portion of it is condensed. It is this portion of steam which is condensed that is taken credit for in this analysis. This assumption is justified based upon the postulated break location, and the actual physical presence of the ECCS injection nozzle. A description the test and test results is contained in References 80.

Table 6.2.1-15 presents the calculated mass and energy release for the reflood phase of the pump suction double ended rupture with minimum safety injection.

The transients of the principal parameters during reflood are given in Table 6.2.1-16.

Post-Reflood Mass and Energy Release Data

The FROTH code [Reference 26] is used for computing the post-reflood transient.

The FROTH code calculates the heat release rates resulting from a two-phase mixture level present in the steam generator tubes. The mass and energy releases that occur during this phase are typically superheated due to the depressurization and equilibration of the broken loop and intact loop steam generators. During this phase of the transient, the RCS has equilibrated with the containment pressure, but the steam generators contain a secondary inventory at an enthalpy that is much higher than the primary side. Therefore, there is a significant amount of reverse heat transfer that occurs. Steam is produced in the core due to core decay heat. For a pump suction break, a two phase fluid exits the core, flows through the hot legs and becomes superheated as it passes through the steam generator. Once the broken loop cools, the break flow becomes two phase. The methodology for the use of this model is described in Reference 64.

After steam generator depressurization/equilibration, the mass and energy release available to containment is generated directly from core boiloff/decay heat.

Table 6.2.1-18 presents the two phase post-reflood (FROTH) mass and energy release data for the pump suction double ended case.

Decay Heat Model

On November 2, 1978, the Nuclear Power Plant Standards Committee (NUPPSCO) of the American Nuclear Society approved ANS standard 5.1 for the determination of decay heat. This standard was used in the mass and energy release model with the following input specific for the Sequoyah Nuclear Plant Units 1 and 2. The primary assumptions which make this calculation specific for the Sequoyah Nuclear Plant Units 1 and 2 are the enrichment factor, minimum/maximum new fuel per cycle, and cycle length. A conservative lower bound for enrichment of 3% was used. Table 6.2.1-8 lists the decay heat curve used in the Sequoyah Ice Weight Optimization analysis.

Significant assumptions in the generation of the decay heat curve:

1. Decay heat sources considered are fission product decay and heavy element decay of U-239 and N_P-239.

2. Decay heat power from fissioning isotopes other than U-235 is assumed to be identical to that of U-235.

3. Fission rate is constant oven the operating history of maximum power level.

4. The factor accounting for neutron capture in fission products has been taken from Equation 11, of Reference 81 up to 10,000 seconds, and Table 10, of Reference 81 beyond 10,000 seconds.

5. The fuel has been assumed to be at full power for 10^8 seconds.

6. The number of atoms of U-239 produced per second has been assumed to be equal to 70% of the fission rate.

7. The total recoverable energy associated with one fission has been assumed to be 200 MeV/fission.

8. Two sigma uncertainty (two times the standard deviation) has been applied to the fission product decay.

Steam Generator Equilibration and Depressurization

Steam generator equilibration and depressurization is the process by which secondary side energy is removed from the steam generators in stages. The FROTH computer code calculates the heat removal from the secondary mass until the secondary temperature is Tsat at the containment design pressure. After the FROTH calculations, steam generator secondary energy is removed until the steam generator reaches Tsat at the user specified intermediate equilibration pressure, when the secondary pressure is assumed to reach the actual containment pressure. The heat removal of the broken loop and intact loop steam generators are calculated separately.

During the FROTH calculations, steam generator heat removal rates are calculated using the secondary side temperature, primary side temperature and a secondary side heat transfer coefficient determined using a modified McAdam's correlation (Reference 12). Steam generator

energy is removed during the FROTH transient until the secondary side temperature reaches saturation temperature at the containment design pressure. The constant heat removal rate used is based on the final heat removal rate calculated by FROTH. The remaining SG energy available to be released is determined by calculating the difference in secondary energy available at the containment design pressure and that at the (lower) user specified equilibration pressure, assuming saturated conditions. This energy is then divided by the energy removal rate, resulting in an equilibration time.

Sources of Mass and Energy

The sources of mass considered in the LOCA mass and energy release analysis are given in Table 6.2.1-22. These sources are the reactor coolant system, accumulators, and pumped safety injection.

The energy inventories considered in the LOCA mass and energy release analysis are given in Table 6.2.1-23. The energy sources include:

1. Reactor Coolant System Water

2. Accumulator Water

3. Pumped Injection Water

4. Decay Heat

5. Core Stored Energy

6. Reactor Coolant System Metal
   - Primary Metal (includes SG tubes)

7. Steam Generator Metal
   (includes transition cone, shell, wrapper, and other internals)

8. Steam Generator Secondary Energy
   (includes fluid mass and steam mass)

9. Secondary Transfer of Energy (feedwater into and steam out of the steam generator secondary)

It should be noted that the inconsistency in the energy balance tables from the end of Reflood to the time of intact loop steam generator depressurization/equilibration, i.e., "Total Available" data versus “Total Accountable" resulted from the omission of the reactor upper head in the analysis following blowdown. It has been concluded that the results are more conservative when the upper head is neglected. This does not affect the instantaneous mass and energy releases, or the integrated values, but causes an increase in the total accountable energy within the energy balance table.

The mass and energy inventories are presented at the following times, as appropriate:

1. Time zero (initial conditions)
2. End of blowdown time
3. End of refill time
4. End of reflood time
5. Time of broken loop steam generator equilibration to pressure setpoint
6. Time of intact loop steam generator equilibration to pressure setpoint

In the mass and energy release data presented, no Zirc-water reaction heat was considered because the clad temperature did not rise high enough for the rate of the Zirc-water reaction heat to be of any significance.

The consideration of the various energy sources in the mass and energy release analysis provides assurance that all available sources of energy have been included in this analysis. Thus the review guidelines presented in Standard Review Plan Section 6.2.1.3 have been satisfied.

6.2.1.3.7 Accident Chronology

For a double-ended pump suction loss of coolant accident, the major events and their time of occurrence are shown in Table 6.2.1-21 for the minimum safeguards case.

6.2.1.3.8 Energy Balance Tables

Table 6.2.1-22 and 6.2.1-23 gives the initial energy distribution as well as the energy distribution at end of blowdown and end of reflood for the double-ended pump suction case. The release rate transients for this case are consistent with the 10 foot entrainment calculation.

6.2.1.3.9 Containment Environment, Safeguards Performance, and Energy Input Curves

The pressure curves indicate the containment total pressure as a function of time after the accident. The temperature curves show the temperature of the sump and the containment atmosphere for the first day following the accident. These curves (Figures 6.2.1-15, 6.2.1-16, and 6.2.1-17) apply to the double-ended pump suction loss of coolant case with minimum containment safeguards.

6.2.1.3.10 Containment Pressure Differentials

Consideration is given in the design of the containment internal structures to localized pressure pulses that could occur following a loss of coolant accident. If a loss-of-coolant accident were to occur due to a pipe rupture in these relatively small volumes, the pressure would build up at a rate faster than the overall containment, thus imposing a differential pressure across the walls of the structures.

These subcompartments include the steam generator enclosure, pressurizer enclosure, and upper and lower reactor cavity. Each compartment is designed for the largest blowdown flow resulting from the severance of the largest connecting pipe within the enclosure or the blowdown flow into the enclosure from a break in an adjacent region.

The following paragraphs summarize the design basis calculations:

Steam Generator Enclosure

Two break locations were investigated inside the steam generator enclosure, both considering a double-ended rupture of the steamline. Based on the investigation of the high stress points, a rupture is assumed at the second 90° bend on the steamline as it exits the steam generator. The secondary location is at the steam generator nozzle. The blowdown mass and energy releases for the Model 57AG/57AG+ replacement steam generators are given in Table 6.2.1-24. These mass and energy releases did not credit closing of the main steam isolation valves which occur by eight (8) seconds. Thus, after 8 seconds the calculations of the mass and energy release are overly conservative. The TMD computer code using the compressibility factor and the ice condenser heat transfer correlation from the 1974 Waltz Mill full scale tests and unaugmented critical flow is used to calculate the short-term pressure transient. The nodalization of the steam generator enclosure where the break occurs is shown in Figure 6.2.1-41. Node 51 is the break element which represents the case where the steamline rupture is assumed at the second 90° bend.

There is a flowpath connecting the break element 51 to the adjacent steam generator enclosure, which is a mirror image of the enclosure where the break occurs. Both enclosures are nodalized in the same manner where nodes 51 thru 60 apply to the enclosure with the break and nodes 61 through 70 apply to the adjacent enclosure. The nodal network is shown in Figure 6.2.1-42 and the TMD input data is described in Tables 6.2.1-25 and 6.2.1-26. This data has been confirmed to bound the Model 57AG/57AG+ replacement steam generator. The input data assumes that the insulation remains intact. Any additional nodalization in the enclosure is not necessary since it would introduce control volumes with fictitious boundaries. Nodalization sensitivity studies, which are applicable to this analysis, have been performed and filed on other dockets. These sensitivity studies show that the nodalization used in this analysis is conservative. The balance of plant data is similar to that presented previously in Section 6.2.1.3.4.

The pressure transients of each node in the steam generator enclosure where the break occurs are shown in Figures 6.2.1-43 through 6.2.1-52 and are based on the Model 57AG replacement steam generator design. The pressure transient in the upper compartment is shown in Figure 6.2.1-53. The maximum differential pressures across structures are listed in Table 6.2.1-27. Figures 6.2.1-54 and 6.2.1-55 illustrate the transient of the pressure differentials from nodes 51 and 60, respectively, to the upper compartment. By comparison of the pressure transients of the remaining nodes in the enclosure, it is obvious that less severe pressure differentials will result across the remainder of the structures. Significant pressure differentials will not occur across the steam generator vessel. This is shown in Figures 6.2.1-56 through 6.2.1-60, which show the differential pressure transients for nodes internal to the steam generator enclosure.

A similar analysis investigated a break postulated at the steamline exit from the steam generator. In this case, the space in the enclosure above the steam generator vessel was modelled as one node. Therefore nodes 51 and 60 were combined, as were nodes 61 and 70 in the adjacent enclosure. All of the remaining enclosure model was unchanged. The pressure transients and thus the pressure differentials across the structures, were nearly identical to the previous analysis described above.

The design of the steam generator compartments is discussed in detail in Section 3.8.3.4.8. The design differential pressure from a main steamline break was spatially varied among the nodes, but within any particular node, the pressure was applied to the structural model as a uniform constant pressure. The steam generator enclosures were originally designed for two separate pressure loadings. These loadings are (1) a 24 psi maximum internal differential pressure from a break in the main steamline and (2) a uniform internal pressure of 43 psi, which was used as part of the original design and is not required to be considered in the evaluation and/or modification of the existing structures.

The analysis for the Model 57AG/57AG+ replacement steam generator resulted in a maximum pressure differential of 19.52 psi compared to the design pressure of 24 psi. The variation in the maximum differential pressure from node to node at any given elevation in the steam generator enclosure was 0.06 psi. The variation in the maximum differential pressure from a node at one elevation to a node at another elevation was calculated to be 0.99 psi. The design differential pressure exceeds the calculated differential pressure, and the structural integrity of the steam generator enclosure is confirmed.

Reactor Cavity

The TMD computer code with the unaugmented homogeneous critical flow correlation was used to calculate pressure transients in the reactor cavity region.

Nodalization sensitivity studies were performed before the Sequoyah analysis was begun. The total number of nodes used varied from 6 to 61. In the 6-element model, no detail of the reactor vessel annulus was involved, and for that reason the model was discarded. Subsequent model changes primarily involved greater detail in the reactor vessel annulus. First, the annulus was divided into two vertical and eight circumferential regions. Next, some additional detail was added in the nozzle region, resulting in a 32-element model. A change to a 44 element model was affected by increasing to three vertical and eight circumferential regions. The total integrated pressure in the reactor cavity

changed only slightly because of the change from 32 to 44 elements. The next change, to 46 elements, produce the model shown, with detailed modeling around the nozzle sustaining the break. The increase to 46 elements caused virtually no change in the integrated pressure. The additional elements from 46 to 61 are external to the reactor cavity (ice condenser, inspection ports, etc.).

The nodal scheme around the reactor vessel produces a very accurate post-accident pressure profile because of its design. Element 3 is a small element inside the primary shield. It would contain internal flow losses due to turning and thus contain a pressure gradient if it were made larger. The four elements numbered 33, 34, 45 and 46 are made small to minimize internal pressure variation, and the elements farther from the break are made larger because pressure gradients are low in those regions.

Figure 6.2.1-61 shows the general configuration of the reactor vessel annulus nodalization.

Figure 6.2.1-62 shows the flow path connections for the 61-element model of the Sequoyah plant.

Figure 6.2.1-63 illustrates the positions of some of the compartments. In the model, the lower containment is divided into four loop compartments (21-24). The upper containment is represented by compartment 32. The ice condenser is modeled as five elements (48-52), neglecting any flow distribution effects. The break occurs in compartment 1, immediately around a nozzle. The rest of that pipe annulus is represented by a compartment 53. The unbroken pipe annuli are compartments 54-61. The upper reactor cavity is compartment 47, the lower reactor cavity is compartment 2, and the remainder of the elements, as shown on Figure 6.2.1-63, are in the reactor vessel annulus. Compartments 15, 42, and 16 are really adjoining compartments 17, 43, and 18 respectively. Thus, compartment 13 is on the opposite side of the vessel from the assumed break.

The break limiting restraint restricts the break size. A 100 in^2 cold leg break is the limiting case for the reactor cavity analysis. The mass and energy release rates are presented in Table 6.2.1-28.

Tables 6.2.1-29 and 6.2.1-30 provide the flow paths, lengths, diameters, flow areas, resistance factor, and volume information for the elements and their connections.

The reactor cavity nozzle covers may remain bolted down during normal operation based on "leak before break" analysis (Reference 66). All insulation is assumed in place and uncrushed during the entire transient except for the insulation between the break and the reactor vessel annulus. This insulation was conservatively assumed to crush to zero thickness.

The k values are determined by changes in flow area and by turns the flow makes in traveling from the centroid of the first node to the centroid of the second node. The k's for each path were determined from Flow of Fluids by Crane Company, pages A-26 and A-27 (Reference 35).

Representative pressure transients for the break compartment, upper and lower reactor cavities, the upper containment, and the reactor vessel annulus were plotted. (See Figures 6.2.1-63A through F for some sample plots.) These plots demonstrate that the pressure gradient is steep near the break location and is very gradual farther away from the break. This indicates that the model must be very detailed close to the break location, but less detail is required with increasing distance.

Pressurizer

The TMD computer code was used to analyze a break of the 6 inch spray line from the reactor coolant pump outlet, which feeds the pressurizer spray. The pressurizer enclosure is designed for a double-ended spray line break, assuming the valves are stuck open.

The worst break possible in the pressurizer enclosure is a double-ended rupture of the six-inch spray line. The rupture is assumed to occur at the top of the enclosure. The blowdown for this break is given in Table 6.2.1-42. The TMD computer code using the compressibility factor and assuming unaugmented critical flow is used to calculate the short-term pressure transient. The nodalization of the enclosure is shown in Figure 6.2.1-77. Node 51 is the break element. The input data is given in Table 6.2.1-43. The input assumes that the insulation remains intact. The loss coefficients were computed using Reference 35. The maximum number of nodes used was based on the geometry of the system. The pressurizer compartment is essentially symmetrical with no major obstructions to flow which would introduce asymmetric pressures on the pressurizer vessel.

The peak pressure differentials across the pressurizer enclosure walls and across the pressurizer vessel are given in Table 6.2.1-44. Figure 6.2.1-78 shows the pressure transient between the break element and the upper compartment (node 25). As Figures 6.2.1-79 through 6.2.1-81 show the significant pressure differential across the vessel are low, occur early, and are due solely to inertial effects. The pressure versus time curve for the break element is given in Figure 6.2.1-82.

6.2.1.3.11 Steamline Break Inside Containment

Differential Pressure Across Operating Deck

An analysis has been performed to determine the containment mass and energy release and differential and inertial pressure response to the spectrum of steam line ruptures for the original steam generators. The replacement steam generators are similar in design and they have comparable thermal-hydraulic parameters in comparison to the original steam generators. Therefore, the pertinent analysis results in this section are applicable to both the original and replacement steam generators. The analysis has assumed that the rupture is coincident with a single failure of either one emergency diesel generator unit, a steam line isolation valve, or a feedwater control valve. For each single failure the most limiting initial conditions have been assumed, thereby ensuring that the most severe case has been analyzed. Further, in determining the total mass and energy release for each postulated case, all potential sources of fluid mass and energy were considered. This includes those in the steam generators, steam and feedwater lines, and that added by operation of the auxiliary feedwater system.

Should a steam line rupture inside the containment, the affected or faulted steam generator will lose its fluid inventory. Further, the rapid depressurization of the steam generator will cause a sharp increase in the feedwater flow to the steam generator. This flow will be maintained until the feedwater pumps are tripped and the feed control valve is closed. If the feed control valve is postulated to fail, flow will continue to enter the steam generator until the feed isolation valve is closed. This flow may be accompanied by flashing of the fluid in the feed lines. Auxiliary feedwater flow, which is initiated on a Safety Injection signal, will also enter the faulted steam generator until action is taken by the operator to isolate the flow. Reverse steam flow from the other steam generators is prevented by isolation valves located in each steam line outside the containment. Should one of these valves be postulated to fail, the other steam generators can blow down until the respective steam line isolation valves are closed.

In lieu of analyzing a spectrum of steam line break sizes, only a break size of 1.4 ft^2, corresponding to the flow area of the main steam line flow restrictor, has been considered. However, in calculating the energy release to containment, it was assumed that only dry steam was released through the break. As outlined below, the dual assumptions of a 1.4 ft^2 break and dry steam release will overpredict the mass and energy release for both larger and smaller breaks.

For containment pressure evaluations, it is conservative to minimize the amount of water released through the break. As shown in Table 6.2.1-31, the initial break flow for a 1.4 ft^2 break is several times larger than the steady state flow. This high flow will exceed the capacity of the steam generator moisture separators to deliver dry steam, resulting in substantial amount of water being delivered to the break. As the break size is increased, the blowdown would contain still more water. Hence, assuming dry steam release for 1.4 ft^2 break will conservatively overpredict the energy release from a larger break.

As the break is reduced below 1.4 ft^2, the fraction of steam release will increase. However, the rate of depressurization in the steam generator will decrease, thereby reducing the flow into the steam generator due to feed pumping and feed flashing. Further, the release rate from the break would be slower, allowing more energy absorption by the containment heat sinks and cooling systems. Hence, assuming dry steam release from a 1.4 ft^2 break will also overpredict the mass and energy release resulting from smaller breaks.

Consequently, the following cases and specific assumptions for these cases have been considered.

Case A

A 1.4 ft^2 break assuming the failure of one emergency diesel generator unit, one train of Engineered Safety Features is unavailable, reducing containment energy absorption to a minimum. No other failures are assumed.

Case B

A 1.4 ft^2 break assuming the feedline isolation valve in the feedline going to the affected steam generator fails to close upon receiving a closure signal from an SIS actuation signal. Feedwater isolation is completed by closure of the feedwater control valve associated with the faulted steam generator. Both trains of Engineered Safety Features are assumed to be available for containment cooling.

Case C

A 1.4 ft^2 break assuming the feedline control valve in the feedline going to the affected steam generator fails to close upon receiving a closure signal from an SIS actuation signal. Feedwater isolation is completed by closure of the feedwater isolation valve associated with the faulted steam generator. Both trains of Engineered Safety Features are assumed available for containment cooling.

Case D

A 1.4 ft^2 break assuming the isolation valve on the faulted steamline fails to close. Flow from the unaffected steam generators is assumed to be isolated by closure of the steamline isolation valves associated with the unaffected steam generators.

Maximizing the steam release rate through the break was done by assuming that a high steam generator pressure is maintained. Also, the effect of subcooled feedwater flow on reducing the steam generator steam pressure was not assumed. The mass entering the steam generator is maximized by assuming a very rapid steam generator pressure decay. This is done by ignoring the heat input from the reactor coolant system and by assuming full capacity main and auxiliary feedwater flow enters the faulted steam generator at minimum enthalpy. These assumptions are essentially opposite of those used in calculating the steam release rate.

The following assumptions were made in all of the cases analyzed.

1. From the time that the steam line break occurs, all main and auxiliary feed is assumed to go to the faulted steam generator. Main feed is isolated on a feedwater isolation signal resulting from an SIS signal. Auxiliary feed is assumed to be isolated by operator action 10 minutes after the break occurs.

2. All mass released from the steamline break is assumed to be released at an enthalpy of 1200 BTU/lbm.

3. A safety injection signal, reactor trip, and steam and feedwater isolation signals were assumed to be generated at 5 seconds after the break, including instrument delays. This assumption is consistent with the actuation times for an SIS signal for the cases considered.

4. Primary feedwater isolation is provided by the main feedwater regulator valves, assumed to close in six seconds after receiving a signal to close. (See Reference 75 for a discussion justifying a stroke increase to 7.0 seconds.) Main feedwater isolation valves were assumed to close in no more than 10 seconds (see References 67 and 68 for discussion of common station service transfer additional time delay) after receiving signal to close. Full flow was assumed until a valve was completely closed.

5. After main feed isolation occurs, the entire water volume downstream of the feedwater isolation valve (or feedwater control valve if the isolation valve fails) is assumed to flash into the faulted steam generator.

6. No credit is taken for the main feedwater pump trip actuated on a feedwater isolation signal.

7. The break is assumed to occur at a no load power level. A break at no load is the worst case because of the higher steam pressure and temperature and because of the larger fluid inventory at no load (total energy available at time of break).

The mass and energy release rates for each case are presented in Table 6.2.1-31.

Since the instantaneous mass and energy release rates and the integrated values are substantially higher than the other cases considered, case D is the worst case containment steamline break for differential and inertial pressure calculations.

The peak differential pressure across the operating deck is due to the inertial peak. The TMD computer code was used to calculate the containment pressure response early in the transient until after the inertial peak was reached. The peak inertial pressure and the peak differential pressure across the operating deck was 6.2 psig and 5.9 psig, respectively.

Maximum Containment Temperature

Introduction

The LOTIC-3 computer code has been developed to analyze steamline breaks in an ice condenser plant. Details of the LOTIC-3 computer code are given in References 30 to 33. It now includes the ability to calculate superheat conditions and has the ability to begin calculations from time zero [Reference 33]. The LOTIC-3 computer code has been found to be acceptable for the analysis of steamline breaks [Reference 36] with the following restrictions.

1. Mass and energy release rates are calculated with an approved model.

2. Complete break spectra are analyzed.

3. Convective heat flux calculations as described in Reference 33 are performed for all break sizes.

Two separate condensation models are used by the LOTIC-3 computer. The 100 percent condensate reevaporization model is used for large breaks, and for small breaks the conservative 0 percent condensate reevaporization and convective heat flux models are used. As pointed out in previous LOTIC-3 submittals, this position is felt to be justified. However, it has also been shown that the small steamline break temperature transients are more severe than large break transients, even if the large break calculations assume no reevaporization of the condensate and do not take credit for convective heat flux [Reference 30].

Equipment located inside the containment needed for the safe shutdown following a MSLB is environmentally qualified. Superheating issues associated with the steam released from the affected steam generator have been addressed by TVA and reviewed and accepted by the NRC [Reference 65].

Large Break Analysis

These blowdowns are dry steam blowdowns representative of a 3467 Mwt plant operating at a steam pressure of 832 psia, and Model 51 steam generators. Breaks upstream and downstream of the steam line flow restrictor have been analyzed for Sequoyah. The temperature transient for these blowdowns indicates that small steam line breaks produce more severe temperature transients than the large breaks, even if the large break calculations do not assume condensate revaporization or convective heat flux.

A summary of the assumptions made in the analysis is as follows.

1. Breaks were assumed to be double-ended ruptures occurring either upstream of the flow restrictor (4.6 ft^2) or downstream of the flow restrictor (1.4 ft^2). Note: The design of the replacement steam generators includes an integral flow limiter in the main steam nozzle, which eliminates the potential for a main steam line break upstream of the flow restrictor.

2. Blowdown from the broken steam line is assumed to be saturated steam.

3. Steamline and feedwater line isolation are completed within 10 seconds (see References 67 and 68 for discussion of common station service transfer additional time delay for the feedwater isolation) after the break occurs. The isolation signal is generated by a low steam line pressure signal from the Solid State Protection System.

4. Plant power levels of 100.7 percent of nominal full load power and zero power were considered.

5. Failures of a main steam isolation valve, a diesel generator and auxiliary feedwater runout control were considered individually. A feedwater isolation valve failure was incorporated into all cases considered.

6. The auxiliary feedwater system is manually realigned by the operator after 10 minutes. Information available to the operator is given in plant emergency procedures and is available immediately upon initiation of the accident. There will be approximately three minutes from initiation of operator action to termination of auxiliary feedwater flow to the affected steam generator.

7. For the full double-ended ruptures, the main feedwater flow to the steam generator with the broken steam line was calculated based on an initial flow of 100 percent of nominal full power flow and a conservatively rapid steam generator depressurization. The peak value of this flow occurring just before isolation is 377 percent of nominal for breaks at the exit of the steam generator (i.e., upstream of the flow restrictor) and 326 percent of nominal for breaks at the flow measuring nozzle (i.e., downstream of the flow restrictor).

The auxiliary feedwater system will be actuated shortly after the occurrence of a steam line break. The mass addition to the faulted steam generator from the auxiliary feedwater system may be conservatively determined by using the following assumptions.

1. The entire auxiliary feedwater system is assumed to be actuated at the time of the break and instantaneously pumping at its maximum capacity.

2. The affected steam generator is assumed to be at atmospheric pressure.

3. The intact steam generators are assumed to be at the safety valve set pressure.

4. Flow to the affected steam generator is calculated from the auxiliary feedwater system head curves, assumptions 2 and 3 above, and the system line resistances. The effects of any flow limiting devices are considered.

5. The flow to the faulted steam generator from the auxiliary feedwater system is assumed to exist from the time of rupture until realignment of the system is completed.

6. The failure of auxiliary feedwater runout control was considered separately, as a single failure. For this case, the auxiliary feedwater flow was determined using all the assumptions listed above and in addition failure of runout control on an auxiliary feedwater pump.

The auxiliary feedwater system on Sequoyah has not been changed in any way that would effect the conclusions of the original analysis.

The analysis for Sequoyah used the following auxiliary feedwater flow rates.

1. With runout protection operational at constant auxiliary feedwater flow rate of 1400 gpm to the faulted steam generator.

2. Failure of runout protection was simulated by assuming a constant auxiliary feedwater flowrate of 2250 gpm to the faulted steam generator.

The auxiliary feedwater flow rates calculated for Sequoyah using the assumptions outlined in the response to 1 above give valves of 1530 gal/min to the faulted steam generator with runout protection operating and less than 2250 gal/min with a single failure in the runout protection system.

The analysis performed by Westinghouse for the Sequoyah BIT Removal Analysis addressed the steamline break transients and demonstrated that the limits discussed in the original report were still met for an auxiliary feedwater flowrate of 2250 gal/min to a faulted steam generator.

Several failures can be postulated which would impair the performance of various steam line break protection systems and therefore would change the net energy releases from a ruptured line. These are:

1. Failure of a main steam isolation valve increases the volume of steam piping which is not isolated from the break. When all valves operate, the piping volume capable of blowing down is located between the steam generator and the first isolation valve. If this valve fails, the volume between the break and the isolation valves in the other steam lines including safety and relief valve headers and other connecting lines will feed the break.

2. Failure of a diesel generator would result in the loss of one containment safeguards train resulting in minimum heat removal capability.

3. Failure of a feedwater regulating valve or feedwater isolation valve to close will increase the inventory of feedwater supplied to the steam generator. Upon occurrence of a main steam line break, the feedwater regulating and isolation valves will close. Although the feedwater regulating valves will close before the feedwater isolation valves, the feedwater isolation valves are located nearer the steam generators and therefore less feedwater inventory exists in the feedwater lines between the feedwater isolation valves and the steam generators. The net results during a main steam line break transient are that a greater inventory of additional feedwater will be forced into the affected steam generator if the feedwater isolation valve failed to close because of the increased line volume between the feedwater isolation valve and the feedwater regulating valve, which includes all headers and connecting lines. For this event, the most limiting case is the failure of the feedwater isolation valves to close and not the feedwater regulating valves.

4. Failure of the auxiliary feedwater runout control equipment would result in higher auxiliary feedwater flows entering the steam generator before realignment of the auxiliary feed system.

The effect of these failures is to provide additional fluid which may be released to the containment by the break or reduce the heat removal capability of the containment safeguard systems.

In the analysis, the single failures listed above have been evaluated for 4.6 ft^2 and 1.4 ft^2 breaks at 100.7% and 0% power to determine the worst steam line break cases.

Failure of the auxiliary feedwater isolation valve to close has not been considered. The maximum auxiliary feedwater flow that can be delivered to a faulted steam generator has been assumed in the analysis for 10 minutes, two cases being considered: (1) with runout protection operational, (2) with failure of runout protection. After 10 minutes, the operator takes action to isolate auxiliary feedwater to the broken steam generator. At that time, if the remote controlled auxiliary feedwater isolation valve fails to close, the operator can trip the two auxiliary feedwater pumps feeding the broken steam generator until this valve or another in the line is manually closed.

Consistent with the licensing basis for the Sequoyah Plant, operator action to realign auxiliary feedwater has been assumed only at 10 minutes.

The RWST storage basin provides storage for borated water after a postulated rupture of the tank. This basin ensures that a minimum of 20,000 gallons of borated water is maintained in the event of a simultaneous rupture of the RWST and the main steamline outside of containment. This simultaneous rupture is assumed to be caused by a tornado. This minimum volume of borated water insured by the storage basin ensures that safety injection flow is available to mitigate the most limiting steamline break event within operator action times. (Reference 90)

Since the mass and energy release rates are considerably less than the RCS double-ended breaks and their total integrated energy is not sufficient to cause ice bed meltout, the containment pressure transients generated for the RCS breaks will be more severe.

<u>Containment Transient Calculations:</u>

The following are the major input assumptions used in the LOTIC-3 steambreak analysis for Sequoyah:

1. Minimum safeguards are employed, e.g., one of two spray pumps and one of two air return fans.

2. The air return fan is effective 10 minutes after the high-high containment pressure signal is read.

3. A uniform distribution of steam flow into the ice bed is assumed.

4. The initial conditions in the containment are a temperature of 120°F in the lower volume, 100°F in the dead-ended volume, a temperature of 85°F in the upper volume, and a temperature of 15°F in the ice condenser. All volumes are at a pressure of 0.3 psig (see Table 6.2.1-33).*

5. A spray pump flow of 4750 gpm is used in the upper compartment. The spray initiation time assumed was 30 sec. after reaching the high-high setpoint..

6. Containment structural heat sinks as presented in Table 6.2.1-32 were used.

7. The air return fan empties air at a rate of 40,000 cfm from the upper to the lower compartments.

8. A series of large break cases (1.4 - 4.6 sq. ft. double-ended ruptures) were run to determine the limiting large break case (see Table 6.2.1-34). In addition, a series of small breaks were analyzed with LOTIC at the 30 percent power level (see Table 6.2.1-35).

9. The mass and energy releases for the limiting breaks are given in Tables 6.2.1-36 through 38. Since these rates are considerably less than the RCS double-ended breaks, and their total integrated energy is not sufficient to cause ice bed meltout, the containment pressure transients generated for the previously presented double-ended pump suction RCS break are considerably more severe. However, since the steamline break blowdowns are superheated, the lower compartment temperature transients calculated in this analysis will be limiting.

10. The heat transfer coefficients to the containment structures are based on the work of Tagami. An explanation of their manner of application is given in Reference 31.

11. 2.45×10^6 lbs of ice initially in the ice condenser.**

Large Break

The limiting case among the double-ended ruptures which yielded a calculated peak temperature of 290°F, is the 1.4 ft^2, 102 Percent Power, MSIV failure case. Figure 6.2.1-64 provides the Upper and Lower Compartment temperature transients, and Figure 6.2.1-65 illustrates the lower compartment pressure transients. Table 6.2.1-36 contains the mass and energy release rates for the above case.

Small Break

The most severe transient in terms of superheat temperature duration for the small break spectrum is the 0.35 ft^2, 30 Percent Power, with AFW Pump Runout Protection Failure. The temperature transient for the case is presented in Figure 6.2.1-66 and the pressure transient is provided in Figure 6.2.1-67. Table 6.2.1-37 provides the mass and energy release rates for this case.

* The temperatures listed as initial conditions are historical values. Minor increases in the analytical temperature inputs do not adversely impact the Containment temperature Analysis. (Reference 89)

** This ice mass is a historical value that was the current value when the analysis was completed. Moderate changes to the ice mass do not adversely affect the Containment Temperature Analysis as there is not enough energy on the secondary side to melt-out the ice bed and peak containment temperature resulting from a steamline break is primarily sensitive to enthalpy in the blow-down. (Reference 89)

The most limiting case in terms of peak calculated temperature is the 0.6 ft^2, 30 Percent Power, with AFW Pump Runout Protection Failure case. This case resulted in a calculated peak temperature of 325.5°F. Figure 6.2.1-68 presents the temperature transient and Figure 6.2.1-69 shows the pressure transient of the Lower Compartment. The mass and energy releases are provided in Table 6.2.1-38.

Tables 6.2.1-34 and Table 6.2.1-35 provide the overall results of the calculated peak temperatures for the Large and Small Break spectrums.

6.2.1.3.12 Maximum Reverse Differential Pressure

Following a postulated pipe break accident, the occurrence inside the ice condenser containment may be characterized by two distinct periods:

1. The initial blowdown, which occurs in approximately 10 seconds. During this period, the air initially in the lower compartment is swept into the upper compartment and the dead-ended compartment by the blowdown mass. Large mass and pressure gradients occur throughout the containment.

2. The depressurization and post-blowdown period which occurs after the end of the initial blowdown. During this period the pressure gradient within the four compartments; upper, lower, ice condenser, and dead-ended, is almost non-existent. The shape of the pressure transient resembles that of the mass and energy releases. Pressure decreases as blowdown diminishes, followed by a slow increase sometime during the reflood.

The analysis for the first period will usually require the modeling of the containment into many nodes so that the non-uniformity of pressure and mass distribution may be properly represented. This has been done in the TMD code.

On the other hand, the analysis for the second period will only require the modeling of the containment by a four compartment system. These calculations are performed by the LOTIC-code (Reference 18).

The code options and features discussed are used in calculating ECCS back-pressure and reverse pressure differentials across the operating deck.

Basic Assumptions

1. The containment is assumed to be physically divided into four compartments; upper, lower, ice condenser, and the dead-ended compartments. Each compartment is a control volume of uniform temperature, pressure and mass distribution. Steam is also assumed to be saturated in each control volume.

2. Flow between compartments is related to the pressure differential between the compartments by a flow resistance factor.

3. A two-sump model is assumed. Temperature is considered to be uniform in each sump.

Calculation of Maximum Reverse Differential Pressure

The computer model previously described was used to calculate the reverse differential pressure across the operating deck. In order to calculate a maximum reverse differential pressure the following assumptions were made:

1. The dead-ended compartment volumes adjacent to the lower compartment, fan and accumulator rooms, pipe trenches, etc., were assumed to be swept of air during the initial blowdown. This is a very conservative assumption, since this will maximize the air mass forced into the upper ice bed and upper compartment, thus raising the compression pressure. In addition, it will minimize the mass of the noncondensibles in the lower compartment. With this modeling the dead-ended volume is included with that of the lower compartment (See Figure 6.2.1-70), resulting in a 3 volume simulation of the containment.

2. The minimum containment temperatures are assumed in the various subcompartments. This will maximize the air mass forced into the upper containment. It will also increase the heat removal capability of the cold lower compartment structures.

3. A high temperature, (T = 100°F), is assumed in the RWST. This will help raise the upper containment temperature and pressure higher for a longer period of time.

4. The upper containment spray flowrates used were runout flows.

5. The containment geometry is summarized in Table 6.2.1-39.

6. The Westinghouse ECCS model (See WCAP-8339) was used for heat transfer to the structure.

7. The mass and energy releases used are given in WCAP-8479.

8. Ice condenser doors are assumed to act as check valves, allowing flow only into the ice condenser.

9. The loss coefficient (k/A^2) of the deck fans for air flow from upper to lower compartment was taken to be 0.0072 ft^{-4}. This value was based on the capabilities of the fans while running. With the fans not running the loss coefficient would be 0.0278 ft^{-4}.

With these assumptions the maximum reverse pressure differential across the operating deck was calculated to be .65 psi. The following plots have been provided:

Figure 6.2.1-71 which shows upper and lower compartment pressures.

Figure 6.2.1-72 which shows upper and lower containment temperatures.

Figure 6.2.1-73 which shows upper to lower containment flowrates.

Parametric studies have been made with this model. Various effects have been investigated to determine changes in the maximum reverse pressure differential. Table 6.2.1-40 gives some of these studies with their results. For Case 6, Figures 6.2.1-74 and 6.2.1-75 give plots similar to Figures 6.2.1-71 and 6.2.1-72. Figure 6.2.1-76 gives ice condenser drain flow as a function of time, and Table 6.2.1-41 gives additional data.

Significant margin exists between the design reverse differential pressures, 6.8 psi and 8.6 psi across the operating deck and the ice condenser lower inlet doors respectively, and those calculated pressures presented in Table 6.2.1-40.

6.2.1.4 Testing and Inspections

6.2.1.4.1 General

Primary containment leakage tests and containment isolation system valve operability tests will be performed periodically to verify that leakage from the containment is maintained within acceptable limits. The types of leakage test are as follows:

1. Test Type A

   Tests to measure the reactor primary containment overall integrated leakage rate.

2. Test Type B

   Tests to detect or measure local leaks of containment penetrations, hatches, personnel locks, electrical penetrations, fuel transfer tube covers, ice blowing lines covers, and thimble renewal cover.

3. Test Type C

   Test to detect or measure containment isolation valve leakage.

6.2.1.4.2 Testing Method and Frequency

Type A, B, and C leakage rate tests will be performed in accordance with 10 CFR 50, Appendix J, with approved exemptions. The components in these tests will be tested at approximately the peak calculated accident pressure. The total leakage rate from the type B and type C tests shall meet the limits specified in the Containment Leakage Rate Testing Program and Technical Specifications.

Test connections and pressurizing means are provided to test isolation valves or barriers for leak tightness. Either air or nitrogen is used as the pressurizing medium, depending on the physical location and service of each line. Leak testing of valves, penetrations, and the primary containment as a whole will be accomplished by one of the following methods:

1. Method 1, pressure decay

   The test volume is established by closing the appropriate isolation valves if necessary. The test volume is pressurized. The test volume pressure is recorded at intervals dependent on magnitude of test volume. The leakage rate is then computed.

2. Method 2, airflow

   The test volume is established by closing the appropriate isolation valves if necessary. This method does not require the determination of the volume to be tested. The test volume is pressurized and maintained. Pressure and airflow are recorded after stabilization of temperature, pressure and air flow.

3. Method 3, containment integrated leak test

The containment is isolated and pressurized. When test pressure is reached, containment is isolated from its pressure source and the following parameters are recorded in periodic intervals:

a. Containment absolute pressure.
b. Dry bulb temperatures.
c. Water vapor pressures.
d. Outside containment weather conditions.

During the test, ventilation inside the containment is operated as necessary to enhance an even air temperature distribution. The test data are processed at periodic intervals during the test to determine test status and leakage conditions. If it appears that the leakage is excessive, the test may be discontinued. After the identified problem is resolved, the test is restarted. After a prescribed time period and assurance of a stabilized leak rate, a leak is induced to verify the leak rate measurement. This is accomplished by precise measurement of a flow which causes a change in the weight of air in the containment that is in the same order of magnitude as the allowable leakage rate. Formulas used in computing the integrated leak rate are based on the formulas found in ANSI/ANS-56.8, 1994.

6.2.1.4.3 Inspections

Equivalent ASME Code Class MC and metallic liners of Code Class CC components shall be examined and tested in accordance with Section XI of the ASME Boiler and Pressure Vessel Code and as required by 10 CFR 50.55a(b)(2)(x), 50.55a(g)(4), and 50.55a(g)(6)(ii)(B), except where specific written relief has been granted. The in-service inspection program for Sequoyah Nuclear Plant is addressed in Section 5.2.8.

6.2.1.5 Instrument Application

Containment Pressure Monitoring

The Emergency Gas Treatment System provides two differential pressure loops to monitor the differential pressure between the annulus and the outside ambient pressure. This pressure difference is indicated and annunciated in the main control room.

Two differential pressure loops are provided to monitor the differential pressure between the annulus and the Auxiliary Building. This pressure difference is indicated and annunciated in the main control room.

The containment ventilation system provides differential pressure control loops to monitor the differential pressure between the annulus and the lower compartment of containment. Four loops are used for indication and annunciation in the main control and to provide high lower compartment pressure signals for the initiation of the safety injection, Environmental Allowance Modifier (EAM) Functions, the containment spray, and phase B containment isolation. The logic for these initiation signals is covered in Chapter 7.

Three vacuum relief paths, with isolation valves, are provided between the annulus and the upper compartment of containment. The isolation valves are normally open allowing the relief valves to vent the annulus to the containment automatically if the upper compartment pressure drops 0.1 psi below the annulus pressure. Four switches located on the relief valves provide valve position information which is indicated in the main control room. The isolation valves are closed if the containment pressure exceeds 1.5 psig. The isolation signal is generated by a two-out-of-three high-pressure switch actuation. Two isolation signals are available, one powered by train A and the other by train B.

Containment Temperature Monitoring

Temperature sensors are distributed throughout the ice bed of the ice condenser. Selected channels are displayed in the main control room and provide actuation signals for the annunciation at preset deviations from the prescribed limits of the ice bed equilibrium temperatures.

Temperature sensors are strategically located throughout the containment. A group of these sensors is monitored in the main control room to ensure that the air temperature requirements for the proper operation of equipment is maintained.

Temperature monitoring and actuation signals associated with the heat removal system are described in Subsection 6.2.2.

Sump Level Control

For a complete description of the Reactor Building sumps, see Subsection 5.2.7.

Leakage Detection Equipment

For a complete description of the leakage detection methods and equipment, see Subsection 5.2.7.

Secondary Containment

Instrumentation is provided in the main control room to give the operator information concerning the status of the active isolation valves, isolation dampers, and airlock doors in the secondary containment barrier. The isolation valves and isolation dampers are equipped with limit switches. These limit switches show the full open or full closed position by indicating light in the main control room. For all the airlocks, each side of airlock is instrumented. For airlocks between secondary containment and primary containment, the instrumentation indicates the position of each airlock door and alarms in the main control room if both sides of an airlock are open simultaneously.

6.2.1.6 Protective Coatings

Approximately 48,000 square feet of concrete surface is coated within the primary containment of each unit. These areas are coated with a catalyzed epoxy coating, which was tested in accordance with ANSI N101.2, "Protective Coatings for Light-Water Nuclear Reactor Containment Facilities," to demonstrate that the coating will remain intact on the surface to which it was applied during postulated LOCA conditions.

Major carbon steel components, such as the containment liner plates and domes, structural and miscellaneous steel, a large portion of the polar crane, etc., are protected with an inorganic zinc primer only, with no organic topcoat (approximately 79,000 square feet). In addition, approximately 46,000 square feet of inorganic zinc-primed steel is topcoated with a LOCA tested and approved catalyzed epoxy coating. These coatings were tested in accordance with ANSI N101.2.

TVA is committed to adhere to Appendix B of 10 CFR 50 and ANSI N45.2 as required to produce a quality end product. Basically, TVA believes that the Quality Assurance Program (QA) for protective coatings inside the containment should control four activities in the coating program. The four major areas to be controlled are:

1. The coating material itself, by extending requirements on the manufacturing process and qualification of coating systems through the use of applicable portions of ANSI Standards N101.2 and N5.9 or its revision N512.

2. The preparation of the surface to which coatings are to be applied.

3. The inspection process.

4. The application of the coating systems.

All four of these controlled activities must have appropriate documentation and records to meet Appendix B requirements.

TVA's protective coating program within the containment is in conformance with NRC Regulatory Guide 1.54. In addition, applicable provisions found in ANSI N101.4 have been incorporated into TVA surface preparation, coating application/inspection specifications, and coating QA procedures. In addition, all maintenance work on Coating Service Level I coatings shall use the same coating material as the existing system or a different coating that has been DBA qualified and approved for use with the existing system.

The amount of uncontrolled coatings allowed inside containment is limited to ensure that in a post-LOCA or MSLB environment, the uncontrolled coatings transported to the containment sump will not degrade the recirculation flow to the engineered safety systems via blockage of the containment sump screen or be ingested into the engineered safety systems and result in component degradation.

The original basis for qualification of coatings was the accident conditions resulting from a design basis LOCA. However, the containment temperature profile for the LOCA does not bound the temperature profile expected from an MSLB. Approximately 12,000 square feet of topcoated steel and 7,500 square feet of coated concrete inside containment, which were previously qualified, would not be qualified for the MSLB conditions.

As a result of the above information, TVA reevaluated the licensing basis for the containment sump screen blockage. While designed and constructed before the issuance of NRC Regulatory Guide 1.82, Revision 0, the original licensing basis for the containment recirculation sump included operability with an assumed 50 percent intake flow area blockage consistent with RG 1.82 recommendations. Scale model testing confirmed that the design of the original sump intake structure (i.e., a 6-inch trash curb around the base of the sump intake structure and 0.25-inch mesh intake screens sloping upward and outward from the sump opening) was sufficient to meet the 50 percent blockage criteria.

To address the potential increased failed coating debris load, an evaluation was performed using a two-dimensional physical transport model (Reference 70) to confirm the ability of the containment sump to support containment spray and emergency core cooling system pump operation. The

evaluation methodology focused on a near-sump region of influence resulting from post-accident flow fields where debris transport to the sump intake was possible. The evaluation quantified the amount of accident generated debris which could potentially be transported to the sump intake structure, established the head loss from the resulting intake screen debris blockage and confirmed that the minimum containment spray and emergency core cooling system pump suction head requirements would be met for the expected blockage. A subsequent evaluation established a maximum limit on failed coatings which could be transported to the containment recirculation sump without degrading the capabilities of the required accident mitigation systems (Reference 71). This evaluation established the revised licensing basis for containment sump intake blockage. It was summarized and submitted for NRC review in Reference 85 and was accepted in Section 3.7 of Reference 86.

To address the additional concerns contained in NRC Generic Safety Issue No. 191 (GSI-191), "Assessment of Debris Accumulation on PWR Sump Performance," the containment sump was subsequently reanalyzed to address the susceptibility of the emergency core cooling and containment spray recirculation functions to the adverse effects of post-accident debris blockage and operation with debris laden fluids. As summarized in Reference 87, the comprehensive reanalysis used the evaluation methodology described in Reference 88. The revised analysis methodology included development of a three-dimensional computational fluid dynamics model to establish debris transport characteristics (i.e., flow directions, velocities and turbulence) in the entire sump pool during post-accident sump recirculation operation. The results of the reanalysis were used to size the flow area of the advanced design containment sump strainers which replaced the original sump intake structure. Blockage testing of the advanced containment sump strainer design with a conservative debris load (which included the assumed failure of all qualified and unqualified coatings in containment) confirmed that the containment sump will support operation of the emergency core cooling system and the containment spray system under all anticipated debris loading conditions. This includes the failure of all coatings installed inside containment.

Removal of mirror insulation due to jet impingement or pipe whip due to a LOCA (and subsequent exposure of non-qualified coatings under the mirror insulation) on the Main Reactor Coolant Piping or Steam Generator is not considered credible based on the discussions in Section 3.6.1.1. Per Section 3.6.5.1, the dynamic effects of ruptures in the primary coolant loop have been eliminated.

6.2.2 Containment Heat Removal Systems

6.2.2.1 Design Bases

Adequate containment heat removal capability for the Ice Condenser Reactor Containment is provided by the Ice Condenser (Section 6.5), the Air Return Fan System (Section 6.6), and the Containment Spray Subsystems whose components operate in the sequential modes described in Paragraph 6.2.2.2. One Containment Spray Subsystem consists of a Containment Spray train and a Residual Heat Removal Spray train (which is a portion of the Residual Heat Removal System Section 6.3).

The Containment Spray Subsystems consist of two trains of redundant equipment per reactor unit. There are four spray headers per unit. Two headers are supplied from separate Containment Spray trains; the other two are supplied by separate RHR Spray trains (see Table 6.2.1-1). Each individual train consists of a pump, a heat exchanger, appropriate control valves, required piping, and a header with nozzles located in the upper compartment of the containment with flow directed to obtain full coverage of the containment upper volume during an emergency. The systems use borated water supplied from the refueling water storage tank and/or the recirculation sump, as shown in Figure 6.2.2-1.

Minimum Engineered Safety Feature performance of the Containment Heat Removal Systems is achieved with the following:

1. Ice Condenser (Section 6.5)
2. One train of the Air Return Fan System (Section 6.6)
3. One Containment Spray Train
4. One Residual Heat Removal Spray Train (needed only after all the ice has melted)

The primary design basis for the Containment Spray Subsystems is to spray cool water into the containment atmosphere when appropriate in the event of a loss-of-coolant accident and thereby ensure that the containment pressure cannot exceed the containment shell design pressure as defined in Section 3.8.2.2. This protection is afforded for all pipe break sizes up to and including the hypothetical instantaneous circumferential rupture of the reactor coolant loop resulting in unobstructed flow from both pipe ends. The Containment Spray trains supplement the ice condenser until all the ice is melted approximately 3600 seconds after the LOCA at which time it and the Residual Heat Removal trains become the sole systems for removing energy directly from the containment. The Containment Heat Removal Systems are designed to provide a means of removing containment heat without loss of functional performance in the postaccident containment environment and to operate without benefit of maintenance for the duration of time necessary to restore and maintain acceptable containment conditions. Although the water in the core after a loss-of-coolant accident is quickly subcooled by the Emergency Core Cooling System (Section 6.3), the design of heat removal capability of each Containment Heat Removal System is based on the conservative assumption that the core residual heat is released to the containment as steam which eventually melts all ice in the ice condenser.

The heat sources and amounts of energy considered in the design of the Containment Heat Removal Systems are provided in the containment design evaluations in subsection 6.2.1.3.

The Containment Spray trains are redundant. The system is designed such that both trains are automatically started by high-high containment pressure signal. The signal actuates, as required, all controls for positioning all valves to their operating position and starts the pumps. The operator can also manually actuate the entire system from the control room. Either of the two trains is capable of delivering the design flow requirements.

The Containment Spray Subsystems are designed to withstand the design basis earthquake and the operational basis earthquake without loss of function. They are Engineered Safety Feature Systems and satisfy the TVA Class B Mechanical Requirements. The Containment Spray Subsystems will maintain their integrity and will not suffer loss of ability to perform their minimum required function due to normal operation, faults of moderate frequency, infrequent faults, and limiting faults.

Sufficient redundancy for all supporting systems necessary for minimum operational requirements of the Containment Spray Subsystems is provided and complies with the single active component failure criteria for engineered safety features. Separate divisions on essential raw cooling water supply, power equipment, heat exchangers, pumps, valves, and instrumentation are provided in order to have two completely separated trains.

The system is provided with overpressure protection from excessive pressures that could otherwise result from temperature changes, interconnection with other systems operating at higher pressures, or other means.

Those portions of the Containment Spray Subsystems located outside of the containment which are designed to circulate, during post accident conditions, radioactively contaminated water collected in the containment meet the following requirements:

1. Shielding within guidelines of 10 CFR 20 and 10 CFR 100.

2. Collection of discharges from pressure relieving devices of closed systems.

3. Remote means for isolating and draining any sections under anticipated malfunction or failure conditions.

4. Means to detect and control radioactivity leakage into the environs to limits consistent with guidelines set forth in 10 CFR 20 and 10 CFR 100.

The air cleanup aspects of the heat removal systems are discussed in Section 6.2.3.

6.2.2.2 System Design

Each Containment Spray train is independently capable of meeting system requirements. Each train includes a pump, heat exchanger, ring header with nozzles, isolation valves and associated piping, and instrumentation and controls. During normal operation, the pumps are idle and the associated isolation valves to containment are closed. Upon system activation during a LOCA, adequate containment cooling is provided in sequential modes. These modes are: 1) spraying a portion of the contents of the refueling water storage tank into the containment atmosphere

using the Containment Spray trains; 2) after the refueling water storage tank has been depleted, recirculation of water from the containment sump through the containment spray trains and back into containment; and 3) diversion of a portion of the recirculation flow from the Residual Heat Removal System through a RHR spray train and back into containment. The latter operation occurs in the event the containment pressure reaches a predetermined value after the ice condenser has been depleted. RHR spray will not be started earlier than 3600 seconds after the start of the event regardless of containment pressure. This limit is required to assure that the decay heat has been reduced sufficiently for the RHR flow to be diverted from the core. The diversion will be by manual operation of system components.

The spray water from the containment and RHR spray trains will be returned from the upper compartment to the lower compartment through two 14 inch drains in the bottom of the refueling canal. A small portion of this spray water is diverted to the auxiliary reactor building floor and equipment drain sump through two 3-inch drains located on the operating deck.

The flow and pump logic diagrams for this system are presented in Figures 6.2.2-1 and 6.2.2-2, respectively.

Component Description

Pumps

The Containment Spray train's flow is provided by two centrifugal type pumps driven by electric motors. The motors, which can be powered either normally or from an emergency source, are direct coupled and nonoverloading to the end of the pump curve. Design parameters for the spray pumps are included in Table 6.2.2-1. See Figure 6.2.2-3 for the containment spray pumps' characteristic curves.

Pump Motors

The containment spray train's pump motors are 700 horsepower rated for 6600 V, 3 phase, 60 Hz, with 0.50 - 13 UNC- 2A grounding terminals supplied inside the auxiliary conduit box for station grounding by TVA. The motors are WIP-I enclosure type with NEMA class B insulation or better. The motors have a 1.15 service factor. They are capable of accelerating the pump flow to full speed in 5 seconds with 90 percent of rated voltage at the motor terminals.

Power Supply

The electrical power system is designed to provide power during and after a design basis accident. It has access to both a preferred and standby power source. As a minimum it provides two redundant power trains with sufficient physical separation and electrical isolation to prevent failure of one power train from causing a loss of the other train. Each power train provides supply power to one of the two redundant Containment Spray trains. Auxiliary equipment required to operate dependent equipment is supplied from the same power train as the dependent equipment to prevent loss of power to one train from causing a loss of equipment in the redundant train.

The pump and motor design conforms as applicable to the following standards: Hydraulic Institute Section B - Centrifugal Pumps, NEMA MGI-1963 - Motors, ANSI B16.5 - Steel Pipe Flanges and Pipe Fittings, ASME Draft Code for Pumps and Valves for Nuclear Power, November 1968.

The Residual Heat Removal pumps which also provide flow to the Containment Spray Subsystems are described in Section 6.3.

Heat Exchangers

The Containment Spray heat exchangers are the vertical shell and U-tube (1B heat exchanger is a straight tube type) type with tubes welded to the tube sheet. Borated water from either the refueling water storage tank or the containment sump circulates through the tube side. Original design parameters are presented in Table 6.2.2-2. The heat exchangers conform to the following standards: Tubular Exchanger Manufacture Association (TEMA), Class R, Tube Side-ASME III, shell side-ASME Boiler and Pressure Vessel Code, Section VIII. The heat exchangers are designed using a conservative fouling resistance for water for the inside and the outside of the tubes of 0.0003 and 0.001 hr ft^2°F/BTU respectively, from the TEMA Standards.

The RHR heat exchangers which also provide cooling to the Containment Spray Subsystems are described in Section 6.3.

Piping

All Containment Spray Subsystem piping in contact with borated water is austenitic stainless steel. Piping joints are welded or flanged as necessary. The piping startup strainers are designed to meet the requirements of ANSI B31.1 with inspection and test requirements of ANSI B31.7 used in lieu of the applicable Nuclear Code Cases.

Spray Nozzles and Ring Headers

Each containment spray ring header contains 312 hollow cone ramp bottom nozzles. These nozzles have an approximately 3/8 inch spray orifice and will not be subject to clogging by particles less than 1/4 inch in maximum dimension. The nozzles produce a mean drop size of approximately 700 microns in diameter at rated system conditions. The spray solution is completely stable and soluble at all temperatures of interest in the containment and therefore will not precipitate or otherwise interfere with nozzle performance. Each nozzle header is independently oriented to maximize coverage of the upper containment volume inside the crane wall. This arrangement will prohibit any flow into the ice condenser.

Using conventional analytical techniques, the pumps were shown to be capable of overcoming the system flow resistance. The resistance includes elevation difference between the spray header and pump, the nozzles, the heat exchanger, piping between the pump and spray header, and water supply piping to the pump suction.

The residual heat removal spray ring headers contain 147 nozzles per header. It has the same design characteristics as the Containment Spray trains.

Refueling Water Storage Tank

During the injection phase immediately following a LOCA, the containment spray trains are supplied from the refueling water storage tank.

This tank is located in the yard. Sufficient water is provided to supply the Containment Spray trains and the ECCS trains for the injection mode at ambient temperature of 105°F maximum until switchover to the ECCS containment sump.

Material Compatibility

All parts of the Containment Spray Subsystem that are in contact with borated water are austenitic stainless steel or equivalent corrosion-resistant material.

Design of Recirculation Piping

The containment spray recirculation water supply is taken from the emergency sump inside the containment (see sections below).

NPSH

The design head of the pumps is sufficient to continue at rated capacity with a minimum level in the refueling water storage tank against a head equivalent to the sum of the design pressures of the containment, the head to the uppermost nozzles, and the line and the nozzle pressure losses. System pressure ensures compliance with the pump net positive section head (NPSH) requirements of NRC Regulatory Guide No. 1.1 for Water Cooled Nuclear Power Plants. The pumped fluid will be a subcooled liquid for all modes in system operation. Therefore, the minimum NPSH available is determined from the following equation:

NPSH = Elevation head + (Containment pressure - liquid vapor pressure) - friction losses

No credit is taken for containment overpressure (i.e., containment pressure used in calculating NPSH is one atmosphere or zero gage pressure). Adequate NPSH exists for all expected fluid temperatures without reliance on increased containment pressure. The flow characteristics of the pump are shown in Figure 6.2.2-3.

Containment Recirculation Sump

The containment recirculation sump is designed to prevent trash and debris from entering that could affect the operation of the Containment Spray trains. In addition, the sump provides for adequate NPSH for the Containment Spray pumps and Residual Heat Removal pumps to operate in the recirculation mode.

Trash and debris are eliminated by an advanced design strainer that contains perforations of 0.095 inch diameter. The strainer is designed with sufficient flow area to maintain a low fluid velocity at the entrance. Therefore, the debris that is more dense than water will settle to the containment floor rather than block the strainer. Internal baffles are provided to allow the escape of air during initial filling and to prevent the formation of vortices. 1/4-inch mesh screens are provided inside the sump pit as a final barrier to prevent debris from jeopardizing Containment Spray and Residual Heat Removal pump operation.

The sump suction piping, the guard pipes, and the isolation valves are designed to TVA Class B Mechanical Requirements. The sump, strainers, supports and associated equipment are designed to the requirements of Sequoyah Design Criteria SQN-DC-V-1.3.2 miscellaneous steel components for Class I structures. This provides the assurance that the sump will remain functional for long-term recirculation mode of ECCS and containment spray subsystems operation.

6.2.2.3 Design Evaluation

Performance of the Containment Spray Subsystems is evaluated through analyses of the design basis accident and various other cases described in Chapter 15. The analyses were performed using the LOTIC code and show that the Containment Spray Subsystems are capable of keeping the containment pressure below the 12.0 psig maximum internal pressure even when it is assumed that the minimum engineered safety features are operating. Also presented are a description of the analytical methods and models which were used along with verification of pertinent items from Waltz Mill tests, and curves showing the calculated performance of important variables following the design basis loss-of-coolant accident.

The design basis accident results in a required Containment Spray train flow rate of 4750 gpm using 87°F maximum average essential raw cooling water inlet temperature to the heat exchangers. Essential Raw Cooling Water flow to the Containment Spray heat exchangers is required when the Containment Spray pump suction switchover from RWST to the containment recirculation sump occurs.

The Containment Spray trains provide two full capacity heat removal loops for the containment, each of which is sized and described in Paragraph 6.2.2.1 to remove heat at the rate which will preclude an increase of the containment pressure above the 12.0 psig maximum internal pressure. All spray headers and spray nozzles are located inside the containment in the upper compartment and will withstand, without loss of function or maintenance, post accident containment environment. The remainder of the systems, with the exception of the refueling water storage tanks, which includes all active components, are located in the auxiliary building and therefore are not adversely affected by wind, tornado, or snow and ice conditions.

The design is based on the spray water being raised to the thermodynamic wet bulb temperature of the containment in falling through the steam-air mixture within the building. The minimum fall path of the droplets is approximately 100 ft from the spray ring headers to the operating deck. The actual fall path is longer due to the trajectory of the droplets sprayed out from the ring header nozzles.

The Containment Spray trains initially operate independently of other engineered safety features, with the exception of the containment spray pump suction from the refueling water storage tank. For extended operation in the recirculation mode, water can be supplied to a containment RHR spray header through the Residual Heat Removal pump and Residual Heat Removal heat exchanger.

An analysis has been made of all active components of the system to show that the failure of any single active component will not prevent fulfilling the design function. This analysis is summarized in Table 6.2.2-3. A single failure in the Residual Heat Removal System will not prevent long-term use of the spray system. The analyses of the loss-of-coolant accident presented in Chapter 15 reflect the single failure analysis. Each of the spray trains provides complete backup for the other.

The two 14-inch refueling canal drains are open to return spray water to the containment sump during all modes requiring containment spray (CS) operability. The drains are sized to accommodate the maximum RHR and CS spray flow.

The passive portions of the Containment Spray Subsystems located within the containment are designed to withstand, without loss of functional performance, a post accident containment environment and to operate without benefit of maintenance.

The spray headers which are located in the upper containment volume are separated from the reactor and primary coolant loops by the operating deck, missile shields, and inner wall of the ice bed. These spray headers are therefore protected from missiles originating in the lower compartment.

This evaluation shows that the Containment Spray Subsystems can withstand expected conditions during the 40 year life of the plant without loss of capability to perform the required safety functions. This is achieved by meeting the following NRC General Design Criteria.

1. The systems can withstand the effects of natural phenomena as required by General Design Criterion 2.

2. The systems are designed to accommodate the effects of and be compatible with the environmental conditions associated with normal operation, maintenance, testing, and postulated accidents including loss-of-coolant as required by General Design Criterion 4.

3. The systems are not shared with another nuclear power unit as required by General Design Criterion 5.

4. The systems are designed to be capable of being inspected and tested to ensure reliability throughout their life as required by General Design Criteria 39 and 40.

6.2.2.4 Testing and Inspections

Performance tests of the active components in the system were performed in the manufacturer's plant and were verified in-place by preoperational tests (Test Nos. TVA 21A and 21B).

Capability is provided to test initially and subsequently on a routine basis to the extent practical the operational startup sequence and performance capability of the Containment Spray trains including the transfer to alternate power sources. Capability to test periodically the delivery capacity of the Containment Spray trains at a position as close to the spray header as is practical and for obstruction of the spray nozzles is provided.

The containment spray trains have been hydrostatically tested to the applicable code test pressure.

All periodic tests of individual components or the complete Containment Spray trains will be controlled to ensure that plant safety is not jeopardized and that undesirable transients do not occur.

The Containment Spray trains are designed and tested to comply with ASME Section XI, Inservice Inspection of Nuclear Power Plant Components. Inservice Inspection is discussed in subsection 5.2.8.

6.2.2.5 Instrumentation Requirements

The Containment Spray trains will be actuated manually from the control room or auxiliary control station or automatically by the coincidence of two sets out of four protection set loops monitoring the lower containment pressure. The high-high containment pressure signal starts the Containment Spray pumps. The spray header valves open upon high-high containment pressure concurrent with their respective containment spray pump operating.

The operation of the Containment Spray trains is verified by instrument readout in the MCR. The Safety Related Display Instrumentation for Post Accident Monitoring is discussed in Section 7.5. Pump motor breakers energize indicating lights in the MCR to show power is being supplied to the pump motors. Containment spray pump discharge is indicated by flow meters in the MCR. Status lights in the MCR indicate valve position. The closing circuits of the normally closed motor-operated valve will be deenergized by torque switches on the operator to assure a tight seat. Containment spray heat exchanger cooling capacity is indicated by inlet and outlet temperature instrumentation available on the plant computer system in the MCR. The RHR spray discharge flow is available on the plant computer system in the MCR.

To protect the pumps from low flow conditions a minimum flow recirculation line is provided to allow pump discharge to be circulated back into the pump intake. This line is opened by a motor-operated valve when flow in the discharge line drops below that required for pump protection or, if upon starting, sufficient flow is not achieved in the spray header within a preset time interval. A flow element in each discharge line monitors the flow rate and provides the flow signal to control the minimum flow recirculation valve.

Instrumentation is provided to monitor the following parameters: containment spray pump suction and discharge pressure; heat exchanger inlet and outlet temperature; heat exchanger inlet and outlet pressure.

Thermocouples in the pump motor bearings and windings provide high temperature alarm in the control room.

In the event of a main control room evacuation, the necessary control functions are transferable to auxiliary control at the shutdown boards and motor control centers.

The system is designed for Category I seismic. The instrumentation and associated interconnected wiring and cables are physically and otherwise separated so that a single event cannot cause malfunction of the entire system.

6.2.3 Containment Air Purification and Cleanup System

Four engineered safety feature systems provide air purification and cleanup. One of these is the Containment Spray trains discussed in subsection 6.2.2. Two others are the air cleanup systems used in the two secondary containment buildings. The one serving the reactor secondary containment enclosure is the Emergency Gas Treatment System and the one serving the Auxiliary Building secondary containment enclosure is the Auxiliary Building Gas Treatment System. The fourth engineered safety feature system is the Ice Condenser System.

The Ice Condenser System is designed to serve as a Containment Air Purification and Cleanup System. The ice condenser serves primarily as a large heat sink to readily reduce the containment temperature and pressure and condense the steam. For this purpose, ice is stored

in a closed compartment between the lower and upper compartments of the containment. The containment is designed such that the only significant flow path from the lower to the upper compartment is through the ice bed. Immediately following a LOCA, a large pressure differential exists between the lower and upper compartment; thereby providing flow through the ice bed. Later in the transient, flow is provided by two containment air return fans which circulate upper containment air into the lower compartment. Since essentially all flow between the lower and upper compartments must pass through the ice bed, the ice bed also serves as a removal mechanism for fission products postulated to be dispersed in the containment atmosphere. Radioiodine in its various forms is the fission product of primary concern in the evaluation of fission product transport and removal following a LOCA. The major benefit of the ice bed is its capacity to absorb molecular iodine from the containment atmosphere. To enhance this iodine absorption capacity of the ice, the ice solution is adjusted to an alkaline pH which promotes iodine hydrolysis to non-volatile forms.

The physical characteristics of the Ice Condenser System are discussed in Section 6.5. The ice bed fission product removal capability is discussed in this section, Section 15.5, and Appendix 6A.

6.2.3.1 Design Bases

6.2.3.1.1 Containment Spray Trains

There are no formal design bases established for air cleanup by the Containment Spray trains. This was done with the knowledge that water from the Containment Spray trains will remove halogens and particulates from the containment atmosphere following a LOCA. No credit, however, was taken for this removal process in accident analyses presented in subsection 15.4.1. In such circumstances, no design bases are needed for this air purification action.

6.2.3.1.2 Emergency Gas Treatment System

The design bases for the Emergency Gas Treatment System are:

1. To keep the air pressure within each Shield Building annulus below atmospheric at all times in which the integrity of that particular containment is required.

2. To reduce the concentration of radioactive nuclides in annulus air that is released to the environs during a LOCA in either reactor unit to levels sufficiently low to keep the exclusion area boundary dose rate below the 10 CFR 100 guideline value.

6.2.3.1.3 Auxiliary Building Gas Treatment System

The design bases for the Auxiliary Building Gas Treatment System are:

1. To establish and keep an air pressure that is below atmospheric within the portion of the Auxiliary Building serving as a secondary containment enclosure during accidents.

2. To reduce the concentration of radioactive nuclides in air releases from the Auxiliary Building Secondary Containment Enclosures (ABSCE) to the environs during accidents to levels sufficiently low to keep the site boundary dose rate below the 10 CFR 100 guideline value.

3. To minimize the spreading of airborne radioactivity within the Auxiliary Building following an accidental release in the fuel handling areas.

6.2.3.1.4 Ice Condenser Design Basis (Cleanup Function)

The design basis of the ice condenser as an Iodine Removal System is to use the chemical and physical properties of ice to reduce the fission product iodine concentration in the post LOCA containment atmosphere. See Appendix 6A for a discussion of the mechanics of the iodine removal process.

6.2.3.2 System Design

6.2.3.2.1 Containment Spray Trains

See Paragraph 6.2.2.2.

6.2.3.2.2 Emergency Gas Treatment System

The Emergency Gas Treatment System is shown schematically in Figure 9.4.7-1. This system has two subsystems; the Annulus Vacuum Control Subsystem and the Air Cleanup Subsystem.

Annulus Vacuum Control Subsystem

The Annulus Vacuum Control Subsystem is a fan, duct, and control network used to establish and maintain a negative pressure within the annulus. It is utilized during normal operations in which containment integrity is required. In emergencies in which containment isolation is required, this subsystem is isolated and shutdown. This subsystem performs no safety related function and, therefore, is not classified as an engineered safety feature.

This subsystem has an independently controlled branch for each reactor unit. The air inlet for each branch is centrally located in the secondary containment annulus above the steel containment dome. The fans discharge into the fuel handling area exhaust system to the Auxiliary Building exhaust vent.

Air pressure control in each secondary containment annulus is achieved with redundant fans, differential pressure sensors, air operated dampers, and control circuitry. This equipment provides a capability to vary the volumetric flow rate drawn from the annulus to keep the pressure at a predetermined negative pressure level. This control function is accomplished with a modulating damper under control of a differential pressure sensor that adjusts the amount of relief air introduced upstream of a constant capacity fan. Two relief air intake lines with modulating dampers and controllers are provided for each unit. One serves as a backup in the event the other fails to function in the proper manner.

The fans and flow control dampers serving both reactor secondary containment annuli are installed in the EGTS room at elevation 734 adjacent to the unit 2 Shield Building.

The nominal setpoint for each annulus vacuum control equipment installation is five inches of water below reference pressure in the Auxiliary Building. The fans employed to create such a negative pressure are described in Table 6.2.1-2.

Air Cleanup Subsystem

The Air Cleanup Subsystem is a redundant shared airflow network having the capability to perform two functions for the affected reactor secondary containment during a LOCA. One of

these is to keep the secondary containment annulus air volume below atmospheric pressure. The second function is to remove airborne particulates and vapors from air drawn from the annulus that may contain radioactive nuclides.

Both of these functions are performed by processing and controlling a stream of air taken from the affected reactor unit secondary containment annulus. The air cleanup operation is conducted by drawing the air stream through a series of filters and adsorbers. Annulus air pressure control is accomplished by adjusting the fraction of the airstream that is returned to the annulus air space.

The rated capacity of each redundant air cleanup unit in the subsystem is 4000 cfm. These were designed in accordance with engineered safety feature standards.

The air flow network for the Air Cleanup Subsystem was designed to provide the redundant services needed for either reactor secondary containment annulus. The intakes and ducting in this network used to bring annulus air to the Emergency Gas Treatment System room on Elevation 734 in the Auxiliary Building are those also used by the Annulus Vacuum Control Subsystem. The intake is centrally located within each Shield Building above the steel containment dome. Within the Emergency Gas Treatment System room the network branches out to supply two air cleanup unit installations that can be aligned with flow control valves to serve either annulus air volume. After the air is processed, the Air Cleanup Subsystem air flow network directs the air to redundant damper controlled flow dividers in the affected reactor unit annulus where the flow is divided for discharge to the shield building vent and to a manifold that distributes and releases the air uniformly around the bottom of the annulus. Butterfly valves, rather than dampers, are installed in the ducts to minimize the outside air in-leakage from the shield building vent into the annulus.

Another feature incorporated into the Air Cleanup Subsystem air flow network is the capability to cool the filters and adsorbers in an inactive air cleanup unit that is loaded with radioactive material. This is accomplished with two cross-over air flow ducts that can draw air at approximately 200 cfm from the active air cleanup unit through the inactive air cleanup unit. This airflow is sufficient to keep the temperature in a fully loaded inactive air cleanup unit to less than 300° F. Two butterfly valves in series are installed in each cross-over air flow path to assure sufficient isolation to perform accurate removal efficiency tests on the HEPA filter and carbon adsorber banks.

The two air cleanup units in the Air Cleanup Subsystem are steel housings containing air treatment equipment, heaters, a drain, test fittings, and access facilities for maintenance. The air treatment equipment within the housing includes a moisture separator* relative humidity heater, prefilter bank, HEPA filter bank, two banks of carbon adsorbers in series and another HEPA filter bank. This equipment is installed in the order listed. A drain is incorporated into the housing adjacent to the moisture separator installation to allow moisture separated from the air stream to flow by gravity to a water collection tank in the Auxiliary Building. Integral to this housing are test fittings properly sized and positioned to permit orderly and efficient testing of the HEPA filter and carbon adsorber banks.

The relative humidity heater installed in the air cleanup units is an electric heater designed to heat the incoming air sufficiently to reduce the relative humidity of saturated air to 70 percent. Included in this installation is a temperature limiting controller that will shut the heater off if excessive temperatures are detected.

(*) See Table 6.2.3-1, Regulatory Guide 1.52 Section C.3.a for applicability requirements.

The HEPA filters and carbon adsorbers installed in the air cleanup units are standard items widely used in the nuclear power industry. The HEPA filters are 1000 cfm units designed to remove at least 99.97 percent of the particulates greater than 0.3 micron in diameter. These filters are water and fire resistant units fabricated in accordance with MIL-F-51068C. The carbon adsorbers are Type II unit trays, fabricated in accordance with AACC Standard CS-8. These trays contain 2-inch-thick impregnated carbon beds. These trays, rated at 333 cfm, are installed in banks in which the face velocity is less than 40 ft/min. Under such circumstances the residence time for air in the carbon bed is about 0.25 second. The total number of filters and adsorber unit trays provided in each air cleanup unit are listed in Table 6.2.1-2.

Two V-belt driven centrifugal fans are provided in the Air Cleanup Subsystem. Each of these is associated with a specific air cleanup unit. These fans were designed to function in process air flow streams at temperature up to 200°F. See Table 6.2.1-2 for additional information on these fans.

Two air flow control modules are included for each reactor unit in the Air Cleanup Subsystem. Each module consists of a differential pressure transmitter, controller, a damper actuator, two discharge modulating dampers, and two isolation dampers (exhaust and recirculation). A single actuator (mechanical linkage) adjusts the discharge modulating dampers simultaneously in opposite directions - one is closed when the other is opened.

This air flow control equipment, installed in the secondary containment annuli, provides the capability to adjust the amount of air returned to the affected reactor unit annulus. A negative 0.5 inch of water gauge controller setpoint is used to adjust the amount of air returned to the affected annulus. Annulus pressures more positive than the controller pressure setpoint (-0.5"W.G) produce a signal causing the damper actuator to begin closing the damper controlling the air flow to the annulus and simultaneously start opening the damper controlling the air flow to the reactor unit vent. Annulus pressures more negative than the controller setpoint initiate the opposite kind of damper motions.

The Unit 1 controls for the Air Cleanup Subsystem were designed for two basic control modes. One mode of control has both air cleanup units in operation simultaneously. The second mode of control has either one of the units in operation and the other in a state in which it can automatically come into operation in the event that the operating unit fails under low flow condition (a Phase A containment isolation signal must be present). If a Phase A containment isolation signal is not present, the standby unit will start on low flow signal only by manual actuation. This operating redundancy is achieved with spatially separated power and control circuitry having different independent power sources to prevent a loss of function from any single subsystem component. Power for both trains of equipment is supplied by the Emergency Power System.

The Unit 2 Air Cleanup Subsystem has four isolation valves (two valves per train) installed in the secondary containment annulus which provide isolation of the pressure control dampers. Each train has a handswitch in the control room positioned so that both trains of isolation valves are in A Auto. A containment isolation Phase A signal causes the valves to open. The open isolation valves provide a flow path for both trains of pressure control dampers which modulate to control annulus pressure.

Operation of the Air Cleanup Subsystem during accidents is initiated by the Phase A Containment Isolation Signal. Both the A and the B trains will be started by this signal coming from either reactor unit. A capability is also provided to start both trains with hand switches in the main control room. Damper alignment and shield building vent isolation valve positioning is also initiated by the same signal, however, just those associated with the affected reactor unit will be activated. On Unit 1, another adjustment of a hand switch in the main control room will change the operating mode to the single train operation with the redundant train in a standby status.

6.2.3.2.3 Auxiliary Building Gas Treatment System

The Auxiliary Building Gas Treatment System is a fully redundant air cleanup network provided to reduce radioactive nuclide releases from the ABSCE during accidents. This system draws air from various parts of the Auxiliary Building to establish a negative pressure in the Auxiliary Building with respect to outside atmosphere. The air is directed to air cleanup equipment before being discharged through the Shield Building Vent.

The rated capacity of each redundant air cleanup unit in this gas treatment system is 9000 cfm. These were designed in accordance with engineered safety feature standards.

The Auxiliary Building Gas Treatment System flow diagram is shown on Figure 9.4.2-5. The airflow network for this system consists of two parallel duct installations originating from exhaust ducting that normally serves various areas in the Auxiliary Building. Each of these ducts lead directly to an air cleanup unit, to the fan associated with the air cleanup unit and then directly to the Shield Building Vent.

The air flow network that is not unique to this system consists of most of the normal ventilation ducting installed in the ABSCE. When the Secondary Containment enclosure is isolated this duct network provides a flow path for reducing the air pressure level in all parts of this enclosure.

Two air cleanup units are utilized in the Auxiliary Buildings Gas Treatment System. Heaters located just upstream of the air cleanup units are designed to reduce the relative humidity of incoming saturated air to 70 percent. The air cleanup units are galvanized steel housings equipped with a prefilter bank, HEPA filter bank and a carbon adsorber bank. This equipment is installed in the order listed.

Integral to this housing are test fittings properly sized and positioned to allow HEPA filter and carbon adsorber bank leakage tests to be conducted in an orderly and efficient manner.

Air is drawn through each of these air cleanup units by a belt driven centrifugal fan. The drive for the fan is an electric motor rated at 20 horsepower. Additional information on these fans is given in Table 6.2.1-2.

Two air flow control modules, each assigned to a particular air cleanup unit, are utilized in the Auxiliary Building Gas Treatment System. These contain a differential pressure sensor and transmitter, control circuitry and an air operated modulating damper.

These two air flow control modules provide the capability for keeping the pressure within the ABSCE at or more negative than 1/4 inch of water below atmospheric. The modulating damper is controlled by the differential pressure transmitter to adjust the amount of outside air introduced into the duct network just upstream of the constant capacity fan described above. Such action will bring in sufficient outside air to keep the fan at its rated flow and to establish and keep the desired negative pressure level.

The controls for the Auxiliary Building Gas Treatment System were designed to provide two basic control modes. One control mode has both air cleanup units in operation simultaneously. The second control mode has either one of the air cleanup units in operation and the other in a state in which it can automatically come into operation in the event the operating unit fails under low flow condition (an auto-start signal must be present). If an auto-start signal is not present,

the standby unit will start on low flow signal only by manual actuation. This operational redundancy is achieved with spatially separated power and control circuitry having different independent power sources to prevent a loss of function from any single system component failure. Power for both equipment trains is supplied by the Emergency Power System.

Operation of the Auxiliary Building Gas Treatment System begins automatically upon receipt of a:

1. Phase A containment isolation signal from either reactor unit, or a

2. High radiation signal from the fuel handling area radiation monitors, or a

3. High radiation signal from the Auxiliary Building exhaust vent monitor, or a

4. High temperature signal from the Auxiliary Building air intakes.

A capability is also provided to start both trains with hand switches in the main control room. Another adjustment capability provided in the hand switches in the main control room will change the operating mode to the single train operation with the redundant train in a standby status. The standby fan will restart on a low-flow signal from the operating fan if an auto-start signal is present.

Employment of this operating mode is expected after the first 30 minutes of operation. In this instance the main control room operator has the capability to select either unit to remain in operation.

6.2.3.2.4 Ice Condenser System

The function of post-LOCA iodine removal is served by the Ice Condenser through chemically controlling the alkaline ice to a pH range of 9.0 to 9.5. This is accomplished by adding sodium tetraborate to the Grade A feedwater in the solution of $Na_2 B_4 O_7 \cdot 10H_2O$ with 2000 $\pm$ 100 ppm of Boron prior to ice basket loading. During the accident, the melting ice provides a medium for removal of iodine from the containment atmosphere and fixation in solution. The component description of the Ice Condenser System is given in subsection 6.5. The operation of the Ice Condenser System is described in subsection 6.5.15.

6.2.3.3 Design Evaluation

6.2.3.3.1 Containment Spray Trains

See subsection 6.2.2.2.

6.2.3.3.2 Emergency Gas Treatment System

The Emergency Gas Treatment System has the capabilities needed to preserve safety in accidents as severe as the design basis LOCA. This was determined from functional analyses of the system to verify that the proper features are provided, reviews of Regulatory Guide 1.52 sections to assure licensing requirement conformance, and from performance analyses conducted to verify that the system has the desired accident mitigation capabilities. The system is shown in Figure 9.4.7-1.

The functional analysis conducted on the Emergency Gas Treatment System have shown that:

1. Adequate isolation of the Annulus Vacuum Control Subsystem during accidents is provided. The two low leakage dampers in series up- stream of the Annulus Vacuum Control Subsystem fans used to isolate the two subsystems--one operated by each subsystem train--give assurance that the Annulus Vacuum Control Subsystem will be isolated during accidents. These dampers fail closed.

2. The air flow control valves in the Air Cleanup Subsystem will align to service the affected reactor units. The network was designed to have all of the air flow control valves needed to service a particular reactor unit responsive to only the containment isolation signal from that particular reactor unit.

3. The system intake and recirculation air outlets within the Shield Building annulus are ideally positioned to promote mixing and dilution of primary containment leakage. Positioning the recirculated air manifold and the air outlets almost completely around the base of the annulus below the level of the containment penetrations assures a clean air flow past most of the penetrations. This air, warmed somewhat by the relative humidity heater, will flow upward past these likely sources of leakage at about 2 ft/min. In doing so, the many flow impediments (i.e., penetrations, and structures within the annulus) will tend to redirect this air flow to some degree to induce mixing and dilution. Substantial amounts of mixing and dilution appear likely in the vertical rise of over 168 feet to the system air intake above the steel containment dome.

4. System startup reliability is very high. The practice of starting up both full capacity trains in the system simultaneously gives greater assurance that one train of equipment will function promptly upon receipt of an accident signal.

5. The use of a single actuator in each equipment train to adjust dampers controlling the air flow recirculated and vented improves train reliability and minimizes the possibility of annulus pressure instability. Train reliability is enhanced by minimizing the number of components utilized to perform this operation. Simultaneous adjustment that closes one damper and opens the other eliminates the hunting problems that could arise from non-simultaneous operation of separately actuated dampers.

6. The Train A and Train B air cleanup units are adequately protected from each other to eliminate the possibility of a single failure destroying the capability to process annulus air during emergencies. The 13.5 feet high and 27-inch-thick concrete wall built between the two units protects each from missiles originating in the other unit. The review of the EGTS conducted to determine its conformance with Regulatory Guide 1.52 has shown that this system, designed prior to issuance of the guide, is in good general agreement with its requirements. Details on this compliance with Regulatory Guide 1.52 are given in Table 6.2.3-1.

The performance analyses conducted to verify that the Emergency Gas Treatment System had the required accident mitigation capabilities was conducted in three basic parts. One of these was concerned with the capability for keeping the Shield Building annulus below atmospheric pressure at all times during a LOCA. The second part was an analysis of the cooling capabilities provided to keep temperatures at safe levels within filters and adsorbers which are fully loaded

with radioactive nuclides. The third part was concerned with the exclusion area boundary and LPZ dosage contribution from radioactive nuclides present in annulus air releases during the design basis LOCA.

Annulus Negative Pressure Control Capability

The capability of the Emergency Gas Treatment System to keep the Shield Building annulus below atmospheric pressure during a design basis LOCA was established with a time iteration analysis performed by a computer. Energy and mass balances were accomplished successively in accordance with mass and volume changes calculated to take place during each time increment. Such a methodology allowed sufficient freedom to account for:

1. Steel containment vessel growth from internal pressure,

2. Steel containment vessel growth from thermal expansion,

3. Outside air in-leakage into the Shield Building annulus, and

4. Heat transfer from the steel containment structure to the annulus air mass.

To assure that this analysis was valid and conservative:

1. The steel containment vessel expansion due to internal pressure was based upon the average strain in the vessel wall. This pressure induced growth was assumed to occur instantaneously at the start of the LOCA.

2. The steel containment vessel growth due to thermal expansion was based upon wall temperatures in three different parts of the containment vessel. One of these is the vessel wall around the lower compartment, the second is the vessel wall around the ice condenser compartment, and the third is the vessel wall around the containment upper compartment. In calculating these vessel wall temperatures, consideration was given to the heat transferred from the containment upper compartment, the heat transferred from the containment atmosphere to the vessel wall, the heat capacity of the vessel wall and the heat transferred to the annulus air mass and the enclosing Shield Building structure. Constant heat transfer coefficients higher than the peak transient coefficients were used for this analysis.

3. Outside air leaking into the Shield Building annulus was assumed to be at a rate of 500 cfm when the pressure differential was 0.5 inches of water. This air was assumed to have a density of air at 0°F. The thermal effect of this outside air in-leakage was neglected.

4. The air temperature in the annulus was assumed to be a thermally mixed average.

5. Only one train of the Emergency Gas Treatment System was assumed to operate during the accident. This train was assumed to operate at 3600 CFM (4000 CFM less 10%). It was also assumed that the EGTS fans can be operational and that the exhaust flow dampers can be in position 9.5 seconds after the annulus pressure increases to -0.5 inches of water (approximately 46 seconds after the LOCA).

The initial steady state conditions used in this analysis were as follows:

	Pressure	Temperature	Relative Humidity
Containment Upper Compartment	Atm.	110°F	0%
Ice Condenser Compartment	Atm.	15°F	0%
Containment Lower Compartment	Atm.	120°F	0%
Shield Building Annulus	-5 in. w.g.	50°F	0%
Outside	Atm.	0°F	0%

The results of annulus pressure versus time and the exhaust flow versus time obtained from this analysis are shown in Figure 6.2.3-1. The maximum annulus pressure occurs at 50.0 seconds and is roughly -1/5 inches of water. The pressure exceeds -1/4 inches of water for approximately 8 seconds; however, the offsite dose limits specified in 10 CFR 100 are not exceeded. Such results indicate that:

1. The negative pressure level of 5 inches of water below atmospheric in the Shield Building annulus maintained by the Annulus Vacuum Control Subsystem before an accident is adequate to assure that the offsite dose will not exceed 10 CFR 100 guidelines.

2. The rated flow rate of 4000 cfm for each train of the Air Cleanup Subsystem is adequate for keeping the annulus pressure below atmospheric throughout the remaining period of the LOCA.

The Sequoyah purge valves, whether used for purging or venting, are administratively controlled by technical specifications, and have position indication and automatic closure capability. Based on the purge valve design features and technical specification controls, these openings when venting can be considered intermittent and the purge lines themselves can be considered normally closed, therefore, no specific secondary containment enclosure analysis is required.

Inactive Air Cleanup Unit Cooling Capabilities

The second performance analysis (Reference 82) conducted to show that the Emergency Gas Treatment System can cope with circumstances that may occur in a LOCA examined the adequacy of the heat removal capabilities provided by the air flow in the inactive air cleanup unit (train) for the HEPA filters and adsorbers loaded with radioactive material. The analysis conducted assumed accident releases in accordance with Regulatory Guide 1.4 plus 1 percent particulates, containment leakages of 0.25 percent/day for the first day and 0.125 percent/day after the first day with all the activity being collected in a single air cleanup unit. An additional assumption made was that half the gamma and all of the beta energy releases were transformed into heat within the filters and adsorbers.

This analysis determined that in the inactive air cleanup unit, the temperature of the HEPA and charcoal adsorbers are less than the 250°F and 300°F, respectively, and that the air temperature at the fan is less than 200°F. These results demonstrate that the 200 cfm air flow rate through a fully loaded inactive air cleanup unit is sufficient to maintain all temperatures below the design temperatures for these major components of the EGTS ACUs. The analysis showed that an air flow rate of 200 cfm through the fully loaded inactive air cleanup unit is sufficient to maintain the exiting air temperature below 200°F, which provides additional assurance that the 620°F carbon ignition temperature is not approached.

Exclusion Area Boundary and LPZ Dosage Contributions

The third performance analysis conducted to show that the Emergency Gas Treatment System has the capability to perform in the required manner to preserve safety during a LOCA was concerned with the exclusion area boundary and LPZ dosage contributions arising from annulus air releases to the environs. This analysis is described and evaluated in Section 15.5 and Appendix 15A.

6.2.3.3.3 Auxiliary Building Gas Treatment System

The Auxiliary Building Gas Treatment system has the capabilities needed to preserve safety in accidents as severe as a LOCA. This was determined by conducting a functional analysis of the system to verify that the system has the proper features for accident mitigation, by reviewing Regulatory Guide 1.52 sections to assure licensing requirement conformance, and from a performance analysis conducted to verify that the system has the desired accident mitigation capabilities.

The functional analysis conducted on the Auxiliary Building Gas Treatment System has shown that:

1. The air intakes for the system are properly located to minimize accident effects. The use of the air intakes provided in the fuel handling and waste disposal areas will tend to minimize the spread of airborne contamination that may be accidentally released at these positions in which the probability of an accidental release is more likely. This localization effect is provided without reducing the effectiveness of the system to cope with multiple activity releases throughout the ABSCE that may occur during a LOCA. Such coverage is accomplished by utilizing the normal ventilation ducting to draw outside air in-leakage from any point along the secondary containment enclosure to the fuel handling and waste disposal areas.

2. Sufficient accident indication signals are utilized to bring the Auxiliary Building Gas Treatment System into operation to assure that the system will function when needed to mitigate accident effects. All accidents in which this system is needed to preserve safety will generate at least one of the four signals that result in system startup.

3. System startup reliability is very high. The practice of starting up both full capacity trains in the system simultaneously gives greater assurance that one train of equipment will function promptly upon receipt of an accident signal.

4. The method adopted to establish and keep the negative pressure level within this secondary containment enclosure minimizes the time needed to reach the desired pressure level. Initially, the full capacity of the Auxiliary Building Gas Treatment System fans will be utilized for this purpose. After reaching the desired operating level, the system control module allows outside air to enter the air flow network just upstream of the filters at a rate to keep the fans operating at full capacity with the enclosed volume at the desired negative pressure level. In this situation, the amount of air withdrawn from the enclosed volume will be equal to the amount of outside air in-leakage through the ABSCE.

5. The negative pressure level selected for the ABSCE is appropriate. A negative pressure of 1/4 inch of water is sufficient to reduce the amount of unprocessed air escaping from this secondary containment enclosure to the atmosphere to insignificant quantities. This negative pressure level is also sufficient to assure that any air leakage between the Auxiliary Building and the Shield Building is from the Auxiliary Building into the Shield Building.

6. The Train A and Train B air cleanup units are sufficiently separated from each other and from other engineered safety feature equipment to eliminate the possibility of a single failure destroying the capability to process Auxiliary Building air prior to its release to the atmosphere. Two concrete walls and a distance of more than 80 feet separate the two trains. Each of these are the only engineered safety feature equipment installed in their respective rooms. The use of separate trains of the Emergency Power System to drive the air cleanup trains is further assurance of proper equipment separation.

The review conducted of the Auxiliary Building Gas Treatment System to determine its conformance with Regulatory Guide 1.52 has shown that this system, designed prior to issuance of the guide, is in good general agreement with these requirements. Details on this compliance with Regulatory Guide 1.52 are given in Table 6.2.3-2.

A performance analysis to determine the capability of the Auxiliary Building Gas Treatment System to establish and maintain a negative pressure in the ABSCE was based on the following assumptions:

1. Infiltration into the ABSCE is equal to 7000 cfm at a negative pressure differential of 1/4-inch water gauge relative to the atmosphere.

2. Only one air cleanup unit of the Auxiliary Building Gas Treatment System operates, and it operates at its rated capacity of 9000 cfm.

3. The air cleanup unit fan begins to operate 30 seconds after initiation of the LOCA.

4. The initial static pressure inside the ABSCE is assumed to be equal to atmospheric pressure. This is a conservative assumption since the ABSCE typically is under a negative pressure during normal operation.

5. The wind pressure head equals 1/8-inch water gauge.

6. The initial ABSCE air temperature equals 104°F.

7. Atmospheric temperature and pressure are 97°F and 14.4 lb/in^2a, respectively.

The performance analysis conducted to verify that the Auxiliary Building Gas Treatment System has the required accident mitigation capabilities has shown that:

1. The system flow rate was sized properly to handle all expected outside air in-leakage at a 1/4 inch of water negative pressure differential. This indicated that the flow rate of 9000 cfm is sufficient to assure an adequate margin above the expected ABSCE in-leakage.

2. The system has the necessary capability to establish and maintain a negative pressure of 1/4-inch water gauge inside the ABSCE within 5 minutes of the occurrence of a LOCA. This is based on an assumed initial delay of 4 minutes to establish the ABSCE and 1 minute to draw down the ABSCE to a negative 1/4-inch water gauge. Actual testing has confirmed that a negative pressure of 1/4-inch water gauge can be obtained in less than one minute. Additionally, the normal Auxiliary Building ventilation lineup maintains approximately 1/4-inch water gauge negative pressure in the Auxiliary Building.

3. The system contains sufficient air cleanup facilities to keep the contributions to the exclusion area boundary and LPZ dosage arising from Auxiliary Building air releases to small fractions of the 10 CFR 100 guideline values. This part of the analysis is presented and evaluated in Section 15.5 and Appendix 15A.

6.2.3.3.4 Ice Condenser System

As a result of experimental and analytical efforts by Westinghouse, the Ice Condenser System has been proven to be an effective passive system for removing elemental iodine from the containment atmosphere and thereby reducing the offsite doses following a LOCA. This is discussed in detail in Appendix 6A and Section 15.5.

6.2.3.4 Testing and Inspections

6.2.3.4.1 Containment Spray Trains

See subsection 6.2.2.4.

6.2.3.4.2 Emergency Gas Treatment System

Preoperational testing of the Emergency Gas Treatment System was conducted and verified the capabilities needed during startup and operating requirements and demonstrated the capability to function properly after failure of any system component. Included in this test scope were functional tests on all system instrumentation, alarms, and data displays. Periodic testing is conducted to verify that the Emergency Gas Treatment System can respond properly and perform its intended functions. These are described in the SQN Technical Specifications.

6.2.3.4.3 Auxiliary Building Gas Treatment System

Preoperational testing of the Auxiliary Building Gas Treatment System was conducted and verified the capabilities of the system to function during accidents. Included in the test scope were functional tests on all system instrumentation, controls, and alarms. In particular, the tests:

1. Verified the startup and control capabilities of the system, considering a single operating component failure.

2. Verified the capability of the air flow control modules to create and maintain a negative 1/4-inch water pressure within the ABSCE.

3. Verified each air cleanup unit's leaktightness, HEPA filter bank efficiency, carbon adsorber bank leakage efficiency, and heater performances.

Periodic testing is conducted in accordance with Technical Specifications.

6.2.3.4.4 Ice Condenser System

During the initial ice loading, periodic tests were conducted to verify that the boron concentration and pH of the ice was within acceptable limits. This was accomplished by measuring the pH and boron concentration of samples of the solution prior to freezing. At routine intervals during plant operation, samples of the ice are measured for pH and boron concentration to verify that these values are still within acceptable limits. The initial

concentration of boron can only increase due to dissipation of some H_2O by sublimation. Ice condenser is serviced in each refueling cycle. Prior to adding new ice, a sample is taken from every new bin of ice made to verify that the boron concentration and the pH are acceptable.

6.2.3.5 Instrumentation Requirements

6.2.3.5.1 Containment Spray Trains

See subsection 6.2.2.5

6.2.3.5.2 Emergency Gas Treatment System

The air flow control instrumentation requirements for the EGTS are described in subsection 6.2.3.2.2. The emergency mode of the EGTS is actuated by a Phase A containment isolation signal. Process and effluent radiological monitoring of the EGTS is described in Section 11.4.

Permanently installed pressure differential gauges across the prefilter, HEPA filter, and both carbon adsorbers allow periodic surveillance of dust loadings and pressure drops on individual components in the filter trains.

Temperature instrumentation indicates air temperatures both upstream and downstream of the relative humidity heaters. The relative humidity heaters are equipped with high temperature cutoffs.

6.2.3.5.3 Auxiliary Building Gas Treatment System

Instrumentation required for the air flow control modules and air cleanup units are discussed in subsection 6.2.3.2.3. The logics, controls, and instrumentations of this Engineered Safety Feature System are such that a single failure of any component will not result in the loss of functional capability for the system.

The filtration systems are equipped with differential pressure gauges for dust loading surveillance on individual filtration components. The relative humidity heaters are equipped with high temperature cutoffs. Instrumentation is also provided for low flow detection in the air cleanup units.

Process and effluent radiological monitoring of the ABGTS is described in Section 11.4.

6.2.3.5.4 Ice Condenser System (Cleanup Function)

The ice condenser is a passive system which requires no control instrumentation to fulfill its design function during an accident.

6.2.3.6 Materials

6.2.3.6.1 Containment Spray Subsystems

See subsection 6.2.2.2.

6.2.3.6.2 Emergency Gas Treatment System

HEPA filters and carbon adsorbers in the Emergency Gas Treatment System are designed for stability and dependability in accident environments discussed above. The HEPA filters have a fire-retardant glass fiber filter, aluminum separators, and carbon steel frame. This type of filter is capable of functioning at rated conditions at temperatures up to 250°F and gamma doses of up to 10^8 rads. The carbon adsorbers will be individually encased, flat-bed, tray-type units. Each tray will contain new, commercially pure, activated carbon treated with iodine or iodine compound to facilitate removal of organic and inorganic iodine compounds. The carbon ignition temperature after impregnation will be greater than 620°F. Adsorber material and gaskets will withstand gamma doses of 1 x 10^8 rads accumulated in a 1 month period.

6.2.3.6.3 Auxiliary Building Gas Treatment System

Same as subsection 6.2.3.6.2 above.

6.2.4 Containment Isolation Systems

The purpose of containment isolation is to provide positive closure methods in lines penetrating primary reactor containment in the event of a loss of coolant accident within containment or another event that creates one of the containment isolation signals. Primary reactor containment is the third of the three principle fission product barriers (fuel clad, RCPB, reactor containment) necessary for the protection of the public health and safety. The objective of containment isolation is to allow the normal or emergency passage of the following while preserving the integrity of the containment boundary:

1. Engineered Safety Feature system fluids, or
2. Fluid of systems which are not required to function following a LOCA but, if available, can be used to accomplish a function similar to an engineered safety feature system.

Other fluid systems shall be isolated upon the appropriate isolation signal. Penetrations through the containment boundary shall be leak rate tested as necessary. An integrated test is used to pressurize the entire containment and prove performance of all penetrations. Penetrations are also individually tested unless specific requirements are met as detailed herein (e.g. closed systems).

The bases for containment isolation and containment integrity ensures that the release of radioactive materials from the containment atmosphere will be restricted to those leakage paths and associated leak rates assumed in the accident analysis and within the limits of 10CFR100. The limitation on containment leakage ensures that the total containment leakage volume will not exceed the value assumed in the accident analysis at the peak accident pressure.

The limitations on closure and leak rate for the containment airlocks are required to satisfy CONTAINMENT INTEGRITY. Surveillance testing of the airlock seals provide assurance that the overall airlock leakage will not become excessive during the intervals between overall airlock leakage tests. The structural integrity of the containment steel vessel will be maintained comparable to the original design standards for the life of the facility. Structural integrity is required to ensure the vessel will withstand the maximum pressure of 12 psig in the event of a LOCA. The visual inspection in conjunction with the Type A integrated test demonstrates this integrity. Containment isolation valves that must isolate on various signals are identified in Reference 73. The operability of these valves ensures that the containment atmosphere will be

isolated from the outside environment in the event of an accident that requires containment isolation. Containment isolation valve closure within the time limits specified ensures that the release of radioactive materials to the environment will be consistent with the assumptions used in the accident analysis. Additional valves have been identified as barrier valves which are a part of the accident monitoring instrumentation in Tech Spec 3/4.3.3.7 and as designated as Category 1 in accordance with Reg Guide 1.97 R2. Containment Isolation valve position indication requirements are specified by Tech Spec 3/4.3.3.7.

A visual inspection which verifies that no loose debris (rags, trash, clothing, etc.) is present in the containment which could be transported to the containment sump and cause restriction of the pump suctions during LOCA conditions. This visual inspection shall be performed:

1. For all accessible areas of the containment prior to establishing CONTAINMENT INTEGRITY, and
2. Of the areas affected within containment at the action of each containment entry when "CONTAINMENT INTEGRITY" is established.

DEFINITIONS

BYPASS LEAKAGE PATH is a potential path for leakage to escape from both the primary containment and annulus pressure boundary. Only one type of BYPASS LEAKAGE PATH is recognized:

a. BYPASS LEAKAGE PATHS TO THE AUXILIARY BUILDING are those paths that would potentially allow leakage from the primary containment to circumvent the annulus secondary containment enclosure and escape directly to the Auxiliary Building secondary containment enclosure.

CLOSED SYSTEM: A piping system that penetrates containment and is a closed loop either inside or outside the containment. Under normal operating conditions or LOCA conditions for closed systems inside containment, the fluid in the system does not communicate directly with either primary coolant or the containment atmosphere.

CONTAINMENT INTEGRITY shall exist when:

a. All penetrations required to be closed during accident conditions are either:
   1) Capable of being closed by an OPERABLE containment automatic isolation valve system, or
   2) Closed by manual valves, blind flanges, or deactivated automatic valves secured in their closed positions, except as provided by Technical Specification 3.6.3.
b. All equipment hatches are closed and sealed, and
c. Each air lock is in compliance with the requirements of Technical Specification 3.6.1.3, and
d. The containment leakage rates are within the limits of Technical Specification 4.6.1.1.c, and
e. The sealing mechanism associated with each penetration (e.g., welds, bellows, or O-rings) is OPERABLE, and
f. Secondary Containment Bypass Leakage Rates are within the limits of Technical Specification SR 4.6.3.8 and TS 6.8.4.h.

CONTAINMENT ISOLATION SIGNAL: A signal that automatically initiates the accident isolation function and establishes isolation barrier(s) in containment penetrations to mitigate the potential consequences of an accident. SQN has the following signals that will isolate valves in lines penetrating containment: Phase A, Phase B, Containment Ventilation Isolation, and Containment Pressure. Auxiliary Feedwater initiation, safety injection, main steam isolation, and feedwater isolation are other ESF actuation signals that are credited for isolating valves in lines penetrating containment.

ENGINEERED SAFETY FEATURE(S): Systems which are required to prevent, arrest, or mitigate the consequences of an accident.

L_a: Allowable leakage from containment (0.25% of the containment free air volume per day at accident pressure of 12 psig). The overall integrated leak rate is limited to 0.75 L_a. The combined leakage from all penetrations and valves subject to Type B and C tests is limited to 0.60 L_a. The combined bypass leakage paths to the Auxiliary Building from penetrations and valves subject to Type B and C tests is limited to 0.25L_a.

PRIMARY CONTAINMENT: For SQN, the freestanding steel vessel that encloses the reactor vessel and other components of the RCPB and which provides an essentially leaktight barrier against the uncontrolled release of fission products to the environment.

REACTOR COOLANT PRESSURE BOUNDARY (RCPB): All those pressure retaining components such as pressure vessels, piping, pumps, and valves that are:

a) part of the reactor coolant system,
b) connected to the reactor coolant system up to and including any or all of the following:

1. the outermost containment isolation valve in system piping that penetrates the primary containment,
2. the second of two valves normally closed during normal reactor operation in system piping that does not penetrate primary containment, or
3. the reactor coolant system safety and relief valves.

TEST TYPE A: Tests to measure the reactor primary containment overall integrated leakage rate. The containment leak rate test will be conducted in accordance with Appendix J of 10 CFR 50, with approved exemptions.

TEST TYPE B: Tests to detect or measure local leaks of containment penetrations, hatches, personnel locks, electrical penetrations, fuel transfer tube covers, ice blowing lines covers, and thimble renewal cover.

TEST TYPE C: Tests to detect or measure containment isolation valve leakage.

VALVE CLOSURE TIME: Time it takes for a power operated valve to be in the fully closed position after the actuation power has reached the operator assembly; this does not include the delay time for instruments and controls.

6.2.4.1 Design Bases

General Design Criteria (GDC) 54 through 57 of Appendix A to 10CFR50 contain NRC design requirements for isolation of piping systems penetrating containment. GDC 54 contains general provisions for leak detection, redundancy, and reliability. GDC 55 requires each line that is part of the RCPB and that penetrates containment to have isolation valves as listed below, unless it can be demonstrated that the provisions for a specific class of lines are acceptable on some other defined basis.

1. one locked closed valve inside and one locked closed valve outside
2. one automatic valve inside and one locked closed valve outside
3. one locked closed valve inside and one automatic valve outside
4. one automatic valve inside and one automatic valve outside

A simple check valve may not be used as the automatic valve outside containment. GDC 56 contains similar provisions for lines that connect directly to the containment atmosphere and that penetrate containment. GDC 57 addresses systems that penetrate containment but that do not communicate directly with either the RCPB or the containment atmosphere and requires at least one valve (not a simple check valve).

10 CFR 50 Appendix J contains NRC requirements for leak rate testing of containment and containment penetrations. Piping systems penetrating the containment have been provided with test vents and test connections or have other provisions to allow periodic leak testing when required. Those automatic isolation valves with air or motor operators that do not restrict normal plant operation are periodically tested to ensure operability. The CI System complies with the requirements and intent of NRC GDC 54-57 and Appendix J through the system design, approved exemptions, and other defined basis.

The criteria for containment penetrations ensure that all fluid lines penetrating the containment have at least one isolation valve near the point of penetration. Most fluid lines that communicate directly with the containment atmosphere have, as a minimum, two isolation valves in series. These lines and isolation valves are designed to SSE requirements and are missile protected. Where possible, lines communicating with the containment atmosphere are designed to meet NRC General Design Criterion 56, Primary Containment Isolation. An exception to this criterion is the containment pressure-sensing lines which are required to function following a DBE.

All closed systems penetrating the containment are designed to meet NRC General Design Criterion 57, Closed System Isolation Valves, with the exemptions identified.

All containment isolation valves and piping shall be seismic Category I (or equivalent) and Safety Class 2 (or equivalent).

Electrical penetrations shall meet the requirements of IEEE 317-1971(canister types) and IEEE 317-1976 or 1983 (modular types). Electrical penetrations are further discussed in Section 7.1.

The regulations allow demonstration of acceptability on "some other defined basis" (for example, where isolation would be detrimental to overall safety in essential lines such as ECCS). TVA had traditionally relied upon the closed system outside containment instead of designating an outboard remote manual valve as a containment isolation valve. This isolation design was considered acceptable and the SQN license SER (ref 40.g) concluded that the containment isolation system was acceptable but did not specifically address the "other defined basis." During the 1985-1988 restart effort, the NRC staff position communicated to TVA (ref 40.h) was that a closed system outside containment is not generally acceptable as an isolation barrier for lines covered by GDC 55 or 56. Leak rate testing per Appendix J was also reevaluated. Following numerous correspondence, specific exemptions were submitted by TVA and approved by the NRC. Refer to Reference 73 for a discussion of each penetration subject to an exemption.

CONTAINMENT ISOLATION SYSTEMS

The Containment Isolation (CI) Systems provide the means of isolating fluid systems that pass through containment penetrations so as to confine to the containment any radioactivity that may be released in the containment following a DBE. The CI Systems are required to function following a DBE to isolate applicable fluid systems penetrating the containment. Isolation design is achieved by applying common criteria to penetrations in many different fluid systems and by using ESF signals to actuate appropriate valves. The following design criteria applies to the containment isolation system.

DESIGN CRITERIA

1. The design pressure of all piping and connected equipment comprising the isolated boundary is equal to or greater than the design pressure of the containment.

2. All valves and equipment which are considered to be isolation barriers are designed in accordance with seismic Category I criteria and are protected against missiles and jets, both inside and outside the containment.

3. A system is closed outside the containment if it meets all of the following:

   a. It does not communicate with the atmosphere outside the containment.
   b. Its safety class is the same as for engineered safety systems.
   c. Its internal design pressure and temperature are greater than or equal to containment design pressure and temperature.
   d. It is missile and jet protected.
   e. Withstand LOCA transients and environment.

4. A system is closed inside the containment if it meets all of the following:

   a. It does not communicate with either the Reactor Coolant System or the reactor containment atmosphere.
   b. Its safety class is the same as for engineered safety systems.
   c. It will withstand external pressure and temperature equal to containment design pressure and temperature.
   d. It will withstand accident temperature, pressure, and fluid velocity transients, and the resulting environment, including internal thermal expansion.
   e. It is missile and jet protected.

<u>Note</u>: Any systems not completely meeting the requirements of criteria 3. or 4. are considered open systems.

5. A check valve inside the containment on the incoming line is considered an automatic isolation valve.

6. A pressure-relief valve that relieves toward the inside of the containment is considered an automatic isolation valve.

7. A locked closed valve may be used for isolating containment, and does not require any additional operator action.

8. To qualify as an automatic isolation valve, a power-operated valve must fail in the position to provide the greatest safety control on loss of air, power, etc.

9. All valves used for containment isolation will be capable of tight shutoff against gas leakage from containment design pressure down to approximately 12-lb/in^{2}g.

10. Remote-manual valves may be used for isolation provisions associated with engineered safety features (such as the ECCS) instead of automatic isolation valves.

The design bases for the CI Systems include provision for the following:

1. A double barrier at the containment penetration in those fluid systems that are not required to function following a DBE.

2. Automatic, fast, efficient closure of those valves required to close for containment integrity following a DBE to minimize release of any radioactive material.

3. A means of leak-testing barriers in fluid systems that serve as containment isolation unless leak testing is specifically exempt based on Appendix J or an approved exemption.

4. The capability to periodically test the operability of containment isolation valves.

CONTAINMENT INTEGRITY

The main function of the CI System is to provide containment integrity when needed. Containment integrity is defined in Technical Specifications.

CONTAINMENT ISOLATION SIGNALS

Containment isolation primarily consists of 3 phased signals: Phase A, Phase B and Containment Ventilation Isolation. There is also a high containment pressure signal specifically for the containment vacuum relief isolation valves. Other ESF signals are also credited for isolating valves in containment penetrations (e.g., SIS, AFW initiation, MSI, and MFWI).

Phase A signal is generated by either of the following:

1. Manual - Either of two momentary controls.

2. Safety injection signal generated by one or more of the following:

    a. Low steam line pressure loops.
    b. Low pressurizer pressure.
    c. Two out of three high containment pressure signals.
    d. Manual - Either of two momentary controls.

Phase B signal is generated by either of the following:

1. Manual - Two sets (two switches per set) - actuation of both switches necessary in either set for spray initiation.

2. Two out of four high-high containment pressure signals.

Containment Ventilation Isolation is generated by any of the following:

1. Manual Phase A

2. Manual Phase B

3. Safety Injection Signal (see above)

4. High Radiation in containment purge exhaust.

Containment isolation Phase A should exist if containment isolation Phase B exists, when the Phase B signal is initiated by automatic instrumentation. Phase A containment isolation does not occur when the Phase B signal is initiated manually. Phase B containment isolation does not occur when the Phase A signal is initiated manually. Containment isolation logic is shown in Figure 6.2.4-1.

A containment isolation signal initiates closing of automatic isolation valves in those lines which must be isolated immediately following a DBE. There is no sequence of timing for isolation valve closure. However, on loss of alternating current power, the diesel will have to be started prior to closure. The containment isolation signal is discussed in section 7.3.

Containment high-pressure set point is established low enough to ensure that containment isolation will occur prior to reaching blowdown peak pressure following a double-ended LOCA. The set pressure is high enough to ensure that normal operation transients of the ventilation systems or temperature changes from cold to hot will not approach the high-pressure set point.

CONTAINMENT ISOLATION VALVES

The criteria for the number and location of containment isolation valves in each fluid system depend on its function and whether it is open or closed to the containment atmosphere or Reactor Coolant System. Four isolation classes of fluid system penetrations are defined as follows:

1. Isolation Class I - Fluid lines which are open to the atmosphere outside the containment and are connected to the RCS or are open to the containment atmosphere. Each isolation Class I System has a minimum of two isolation valves in series. Where system design permits, one valve is located inside and one valve is located outside containment.

2. Isolation Class II - Fluid lines which are connected to a closed system outside the containment and are connected to the RCS, or are open to the containment atmosphere. Also included in isolation Class II are fluid lines which are open to the atmosphere outside the containment and are separated from the RCS and the containment atmosphere by a closed system inside the containment. Each isolation Class II System has, as a minimum, one isolation valve.

3. Isolation Class III - Fluid lines which are connected to a closed system, both inside and outside the containment. Isolation Class III Systems have, as a minimum, one isolation valve.

4. Isolation Class IV - Fluid lines which must remain in service subsequent to a DBE, such as lines serving ESF Systems. Isolation valves on these lines are not automatically closed by the containment isolation signal. Each isolation Class IV System has, as a minimum, one isolation valve (remote-manual operation preferred).

Fluid instrument lines penetrating the containment are designed to meet the General Design Criteria except where specific exemptions or other defined basis exists as described in References 73, 39, and 40.

The CI Systems automatic isolation valves will be required to function upon receiving an actuating signal following a DBE. The 2-barrier scheme used where possible for the Sequoyah Nuclear Plant ensures that in the event of failure of any component to function, a backup means exists to isolate the containment.

Motor-operated, solenoid operated, and air-operated valves are used in containment isolation. Most air-operated and solenoid operated valves fail to the closed position in the event the power supply is lost or fails. All motor-operated valves receive power during normal conditions from the normal power source. Under loss of normal power conditions, power is supplied from the standby power source.

Valves, in non-safety-related systems where function permits, are normally positioned closed to minimize any release following a DBE. Those valves that are required to change position following a DBE are equipped with fast-acting valve operators to immediately close the valve.

Containment isolation valves and operators are designed to withstand the maximum integrated radiation dose occurring during the 40-year life of the plant and the exposure that would occur following a DBE.

Containment isolation valves that are located inside the containment are designed to function under the pressure-temperature conditions of both normal operation and that during the DBE. The pressure-temperature conditions used in normal operation design or conditions for a DBA are stated in the environmental design criteria (section 3.11). Missile protection of the containment and containment isolation valves is discussed in Section 3.5.

Containment isolation valves are designed to seismic Category I requirements. The valves are capable of operation during and after seismic loadings. Valves with operators or similar features of extended proportions are designed to withstand an inertial SSE load, in addition to normal operating loads. Electrical switches or other actuating mechanisms are designed to withstand the inertial load without changing position and causing change of position of the valve disc.

Check valves are used under conditions where differential pressure will close the valves to maintain containment integrity. Lines, which for safety reasons must remain in service subsequent to a DBE, are provided with at least one isolation valve.

Automatic isolation valves that receive a containment isolation signal to close, where closure of the valve will not limit or restrict normal plant operation, are periodically functionally tested by the on-line testing capability described in Section 7.3. All other valves are periodically tested for CIS circuit electrical continuity. All containment isolation valves are tested to the requirements of ASME Section XI, (see section 6.8).

A barrier is defined as a valve, a gasket and a blind flange, or a closed piping system. Piping that forms part of the containment isolation boundary is ANS N18.2 Safety Class 2a, TVA Class B. All automatic valves that are activated by a containment isolation signal also have hand switches in the control room or locally for manual actuation to close in the event the valve fails to go to the closed position.

6.2.4.2 System Design

The penetrations are classified in different types as discussed below. The penetrations are tabulated and schematically illustrated in Reference 73.

Penetration Types I and II Main Steam and Feedwater

The main steam and feedwater line penetrations, shown on drawing 47W331-1, are the "hot" type in which the penetrations must accommodate thermal movement. Each "hot" process line, where it passes through the containment penetration, is enclosed in a guard pipe that is attached

to the process line through a multiple-flued fitting. The guard pipe protects the bellows should the process line fail within the annulus between the containment vessel and the Shield Building. Released fluids from such a failure are directed by the guard pipe into the containment vessel, thereby precluding the discharge of fluids into the annulus. The inner end of the guard pipe is fitted with an impingement ring which protects the bellows from jets originating from pipe breaks inside containment. In addition, the guard pipe for this type of penetration extends through and is supported by the crane wall. This avoids transmitting loads to the containment vessel. Also, it discharges fluid in the event of a pipe rupture into the reactor compartment rather than smaller rooms outside the crane wall, thus preventing over pressurization of these smaller rooms.

For each of these penetrations, the penetration sleeve is welded to the containment vessel. The process line which passes through the penetration is allowed to move both axially and laterally. A 2-ply bellows expansion joint is provided to accommodate any movement between the process line and the containment vessel, and relative movement between the containment vessel and the Shield Building under any conditions. The bellows will be designed to withstand containment design pressure. When an embedded anchor is not utilized, a low-pressure flexible closure will seal the process line to the sleeve in the Shield Building, which will not impose significant stress on the penetration.

This flexible closure is located in the steam valve vaults and serves to contain any leakage from the flued head so that the leakage is routed back to the annulus and to seal the annulus from the outside environment.

Guides and anchors limit movement of pipes such that design limits on the containment penetration and bellows are not exceeded during all conditions of plant operation, test, or postulated accidents.

Penetration Type III RHR Pump Supply and Return

The RHR pump supply and return penetrations, shown on drawing 47W331-1, are also the "hot" type. For these penetrations, the guard pipe does not penetrate the crane wall. This type penetration will be anchored at the Shield Building wall in addition to being supported from the internal concrete structure to minimize loads transmitted to the steel containment vessel.

The Shield Building sleeves have embedded anchors, and the flued heads are in the Auxiliary Building. There is no need for low-pressure flexible closures as used in penetration types I and II since any leakage from the flued head will be processed by the Auxiliary Building Gas Treatment System.

Penetration Types IV and V

Types IV and V penetrations are also thermally "hot" with insulation and bellows, as shown on drawing 47W331-1. Any leakage through the flued heads or through the bellows will be into the annulus and thereby processed by the Emergency Gas Treatment System. The two types differ by only the weld ends.

Penetration Types VI, VII, and VIII

Penetration types VI through X, and XII through XVIII, and XXI are the "cold" penetrations.

For "cold" piping penetrations, a low-pressure flexible closure will seal the cold pipe to the sleeve penetrating the Shield Building. The piping configuration and supports on either side of the penetration will be designed to preclude over stressing the containment vessel at the penetration under any conditions, including postulated accidents.

Relatively small thermal movement or stress is expected for the "cold" penetrations. The clearance space provided for the pipe going through the Shield Building wall is computed by the summation of the relative movements of the pipe and the Shield Building for all design conditions. Ample clearance space will be provided so that the pipe will not be in contact with the Shield Building sleeve under any condition.

Penetration types VI and VII have provisions for dissimilar metal weld. The two types differ in their weld ends only. Penetration types VI and VII are on drawing 47W331-2. The flued heads of both types are located in the annulus.

Penetration type VIII is similar to that of penetration types VI and VII except that there is no dissimilar metal weld. Penetration type VIII is illustrated on drawing 47W331-2.

Penetration Type IX Containment Spray and RHR Spray Headers

There is no difference in penetration types VIII and IX except that penetration type IX is located at the dome. Type IX penetration is illustrated on drawing 47W331-2. The flued heads are located in the annulus.

Penetration Type X Multiple-Line and Single-Line Sleeves

Type X penetrations are primarily for instrumentation lines, such as sampling and monitor lines, and nitrogen supply lines. Typical multiple- line and single-line sleeves are shown on drawing 47W331-2.

Penetration Types XI and XII Emergency Sump

During long-term post accident conditions, containment sump water is recirculated through the RHR System and the Containment Spray Subsystems. The water collects in the floor of the containment and flows to the emergency sump. The water flows out of the containment through type XII penetrations (two per unit) shown on drawing 47W331-2. Each line contains an isolation valve. The valves are enclosed in a valve compartment (two per plant unit). The penetration between the valve compartments and the Auxiliary Building is a type XI penetration (two per plant unit) illustrated on drawing 47W331-1.

The type XII penetration has a flued head located in the containment sump. The outer sleeve (guard pipe) of the flued head is welded directly to the containment liner, which is completely embedded in the concrete.

The type XI penetration has the flued head located in the Auxiliary Building. The penetration is insulated because of the hot sump water which would pass through it in the event of a DBE.

Penetration Type XIII Ventilation

Heating and ventilation ducts utilize penetration type XIII, as shown on drawing 48N406. Process lines are welded directly to these penetrations.

Additional information on ventilation duct penetrations is given in the section on possible leakage paths.

Penetration Type XIV Equipment Hatch

An equipment hatch, fabricated from welded steel and furnished with a double-gasketed flange and bolted dished door, is provided. A test connection to the space between the gaskets is provided to pressurize the space for leak rate testing, as shown on drawings 48N406 and 44N250.

Penetration Type XV Personnel Access

Two personnel locks are provided. Each personnel lock, as shown on drawings 48N406 and 44N240, is a double door, welded steel assembly. Quick-acting type equalizing valves are provided to equalize pressure in the airlock when entering or leaving the containment vessel. The doors are sealed with double gaskets. A test connection to the space between the gaskets is provided to pressurize the space for leak rate testing. The emergency air supply connection to the space between the double doors serves as a test connection to pressurize this space for leak rate testing. A special holddown device is provided to secure the inner door in a sealed position during leak rate testing of the space between the doors.

The two doors in each personnel lock are interlocked to prevent both being opened simultaneously and to ensure that one door and its equalizing valve are completely closed before the opposite door can be opened. Remote indicating lights and annunciators, located in the control room, indicate the door is in operational status. Provision is made to permit bypassing the door interlocking system with a special tool to allow doors to be left open during plant cold shutdown. Each lock door hinge is designed to be capable of adjustment to assure proper seating.

Penetration Type XVI Fuel Transfer Tube

A 20 inch outside diameter transfer tube penetration is provided for fuel movement between the refueling canal in the containment and spent fuel pit. The penetration consists of 20 inch stainless steel pipe installed inside a 24 inch carbon steel pipe, as shown on drawing 47W455-1. The inner pipe acts as the transfer tube and is fitted with a double-gasketed blind flange in the refueling canal and a standard gate valve in the spent fuel pit. The inner pipe is welded to the containment penetration sleeve. Expansion bellows are provided on the pipes to compensate for any differential movement between the two pipes or other structures.

Penetration Type XVII Thimble Renewal

Incore instrumentation thimble renewal requires penetrations in both the steel containment and the Shield Building at the same elevation and azimuth. These are separate penetrations and are not connected in the annulus. The containment penetration is illustrated on drawing 48N406, a similar seal is used on the Shield Building (47W470-3). Double O-ring ring gaskets and leak rate test connectors are provided on both sides of the steel containment penetration as shown on drawing 48N406.

Penetration Type XVIII Ice Blowing

The ice-blowing line penetrations have a blind flange with a double 0-ring gasket inside and outside the containment, as shown on drawings 48N406 and 47W462-7 . Sealing between the Auxiliary Building and the annulus is provided by a blind flange, fitted with a gasket (47W462-7).

Penetration Type XIX Containment Vacuum Relief

The penetrations for the Containment Vacuum Relief System, are shown on drawings 48N406 (sleeve) and 69-5545-77 (assembly). There are no bellows and no flued heads.

Penetration Type XX Electrical

The electrical penetration assemblies will provide a means for the continuity of power, control, and signal circuits through the primary containment structure. The electrical penetration assemblies are designed to maintain containment integrity. Additional discussion of electrical penetrations is provided in Section 7.1.3.

Penetration Type XXI Cold Water Penetrations

The penetration for cold water lines such as ERCW is shown on drawing 48N406. There are no bellows or flued heads.

Penetration Type XXII Maintenance Type

The penetration for X-108 and X-109 are shown on drawings 48N406 (sleeve), 47W331-1 (flued head type XIV), 47W331-3 (test flange). This flued head is similar to the flued heads in penetration Types IV and V but with the difference that the Type XXII penetration does not use insulation.

LEAKAGE PATHS

The possible leakage paths from primary containment are discussed below.

These leakage paths are defined on the basis that the annulus pressure is always less than outdoor ambient, the Auxiliary Building, and the containment pressures. Therefore, whenever containment is required, leakage is into the annulus. The possible leakage paths considered do not include containment leakage through the steel plates or through the full penetration welds in the containment vessels. Neither do the possible leakage paths include Shield Building embedments. This is acceptable, as any leakage through any of these paths will be into the annulus and the leakage will be processed by the Emergency Gas Treatment System.

The more probable sources of containment and Shield Building leakage, such as elastomer seals, bellows, and through line, are considered as possible leak path types. Each penetration that contains elastomer seals or a bellows has at least one leakage path defined in the PENETRATION TABLES. All penetrations not open to the annulus are considered as possible paths for through-line containment and have one or more isolation valves. Thus, every pipe penetration has at least one type of leak path listed. The five different types of possible leakage paths are discussed separately below.

Type A Leakage Path

Leakage type A is leakage from the Auxiliary Building into the annulus.

Type B Leakage Path

Type B leakage paths are from the containment to the annulus.

Type C Leakage Path

Type C leakage is leakage from the outside environment into the annulus.

Type D Leakage Path

Type D leakage path covers the through-line leakage from the containment to the Auxiliary Building.

The motor-operated containment isolation gate valves in each containment spray line are not required to be leak tested provided there is sufficient inventory in the riser between the valves and the ring headers to maintain a water cover on the gate valves at 1.1 Pa for 30 days. This water cover assures there will be no leakage of containment atmosphere to the Auxiliary Building through the containment spray line. The water cover is ensured by verifying water level between elevation 801 and 804 feet at least once each refueling outage prior to re-establishing containment integrity. The Containment Spray System and RHR System are closed loops outside containment and designed to remain water-filled pre-and post-accident. In addition, the Primary Coolant Sources Outside Containment Program (TS 5.5.2) will identify and correct any pressure boundary leakage of these systems.

Type E Leakage Paths

Type E leakage paths are paths from the containment that may potentially bypass the annulus and Auxiliary Building and leak directly past the air cleanup systems.

Through-line leakage from the main steam line, the feedwater lines, and the steam generator blowdown lines constitute one of the two possible paths for type E leakage. The flexible bellows outside the Shield Building for the main steam and feedwater serve to route any leakage from the flued heads back into the annulus. The main steam, feedwater, and blowdown lines are all connected to the secondary side of the steam generator, and thus are not open to containment. In addition, the secondary side of the steam generator is kept at a higher pressure than the primary side soon after the LOCA occurs. Any leakage between the primary and secondary sides of the steam generator is thus directed inward to the containment.

The second possible type E leak path is through the Essential Raw Cooling Water (ERCW) System. Essential raw cooling water is used for normal containment cooling. Under LOCA conditions, the system is isolated by both inboard and outboard containment isolation valves. Any leakage between the containment and the ERCW would normally be to the containment since the ERCW System pressure would be above the maximum containment pressure. If ERCW pressure was less than containment pressure then a possible leakage path exists, via the isolated containment valves, then past radiation monitors, and thence out-of-doors. The layout of the ERCW piping from the intake station to the containment provides a loop seal. The difference in pressure between the large break LOCA post-accident containment environment, considering the elevation head of the highest ERCW user (Upper Compartment Coolers), and the ERCW intake, will prohibit containment out leakage via the ERCW lines. The ERCW valves are tested in accordance with 10 CFR 50, Appendix J, and the results are provided in types B and C test reports.

Another possible Type E leakage path is through the hydrogen analyzer calibration and reagent gas lines for the B-Train analyzer. These lines, however, are sealed by a gas from the calibration or reagent gas bottles on the outboard side of the reagent or calibration gas line flow solenoid containment isolation valves. These valves are located immediately outside the ABSCE boundary, and the reagent and calibration gas lines are welded between the ABSCE boundary and the valves. Thus, any leakage past these valves will be into the auxiliary area, and thus not directly to the environment.

The shutdown maintenance access penetrations (X-108 & X-109) on Unit 1 also are a possible Type E leakage path since the Unit 1 ABSCE boundary has been removed from the Unit 1 additional equipment building. These penetrations are a blind flange, double O-ring design with a zero leakage criteria and are not open during power operation.

6.2.4.3 Design Evaluation

The CI Systems are designed to present a double barrier to any flow path from the inside to the outside of the containment using the double barrier approach to meet the single-failure criterion and satisfy the general design criteria except with approved exemptions.

When permitted by fluid system design, diverse modes of actuation were used for automatic isolation valves. In addition to diverse modes of operation, channel separation was also maintained. This also ensures that the single-failure criterion is met.

The CI System complies with the intent of the NRC Criteria 54, 55, 56, and 57, issued after the establishment of the design basis for Sequoyah, with approved exemptions.

Adequate protection is provided for piping, valves, and vessels against dynamic effects and missiles which might result from plant equipment failures, including a LOCA. Isolation valves inside the containment are located between the crane wall and the inside containment wall where possible. The crane wall serves as the main missile barrier. Other missile barriers are discussed in the FSAR Section 3.5.

The requirements and intent of NRC General Design Criteria 54, 55, 56, and 57, Appendix J and Regulatory Guide 1.11, have been met with specific exemptions and other defined basis as allowed by the regulations. These exemptions and other defined basis are described in detail in References 73, 39, and 40 for the below penetrations:

a. RVLIS. Penetrations X-25C, X-26C, X-27D, X-86A, X-86B, X-86C.
b. Containment Pressure Sensors. Penetrations X-25B, X-26A, X-27A, X-27B, X-85B, X-97.
c. Vacuum Relief Lines. Penetrations X-111, X-112, X-113.
d. RHR Sump Lines. Penetrations X-19A, X-19B.
e. ECCS Injection. Penetrations X-20A, X-20B, X-21, X-22, X-32, X-33.
f. RCP Seal Injection. Penetrations X-43A, X-43B, X-43C, X-43D.
g. RHR Hot Leg Injection. Penetration X-17.
h. CVCS Charging. Penetration X-16.
i. Relief Valve Discharge. Penetration X-24.
j. CCS Supply/Return to Excess Letdown Heat Exchanger. Penetrations X-35, X-53.
k. CVCS Letdown. Penetration X-15
l. RHR Suction From Hot Leg 4. Penetration X-107.
m. CS and RHR Spray. Penetrations X-48A, X-48B, X-49A, X-49B.
n. Main Steam Lines. Penetrations X-13A, X-13B, X-13C, X-13D.
o. Hydrogen Analyzers. Penetrations X-92A, X-92B, X-99, X-100.
p. Blind Flanges. Penetrations X-1, X-3, X-40D, X-54, X-79A, X-79B, X-88, X-108, X-109, X-117, X-118.
q. Personnel Airlocks. Penetrations X-2A, X-2B.
r. Spare Penetrations are listed in the Sequoyah Containment Isolation System Description, Number N2-88-400.
s. Electrical Penetrations X-120E through X-170E (except the spares listed above).
t. Valve Position Indication for seal water filter outlet valves. X-43A, 43B, 43C, & 43D.

6.2.4.4 Tests and Inspections

All components of the CI Systems were designed, fabricated, and tested under quality assurance requirements in accordance with 10 CFR 50, Appendix B, as further described in Chapter 17.

Nondestructive examination was performed on the components of the system in accordance with the applicable codes described in Chapter 3. Subsequent to initial plant operation, CI Systems were periodically tested under conditions of normal operation. Automatic isolation valves that receive a containment isolation signal to close, where closure of the valve will not limit or restrict normal plant operation, are periodically functionally tested by the online testing capability described in Section 7.3. All other valves are periodically tested for CIS circuit electrical continuity. Primary containment leakage tests and containment isolation system valve operability tests will be performed periodically to verify that leakage from the containment is maintained within acceptable limits (see Section 6.2.1.4). Valves shall also be tested in accordance with ASME Section XI (see section 6.8).

6.2.4.5 Materials

The materials for penetrations, including the personnel access airlocks, the equipment access hatch, the piping and duct penetration sleeves, and the electrical penetration sleeves, will conform with the requirements of the ASME Boiler and Pressure Vessel Code, Section III, Class MC. The penetration materials shall meet the NDT impact values as required by this Code. The materials used for various systems are described in the appropriate sections for those systems. The radiolytic or pyrolytic decomposition products, if any, of each material will not interfere with safe operation of the engineered safety feature systems. Protection is provided against the consequence of the failure of penetrations due to brittle fracture by impact testing of the materials and the use of impact tested welding procedures to applicable code requirements.

6.2.5 Hydrogen Sampling In Containment

Following a beyond design basis degraded core event, hydrogen may accumulate within the containment as a result of:

1. Zirconium-water reaction involving the fuel cladding and the reactor coolant.

2. Radiolytic decomposition of water in the core.

3. Radiolytic decomposition of water in the containment sump.

4. Corrosion of materials within the containment.

6.2.5.1 Design Bases

A redundant hydrogen sampling system is designed to detect and give MCR indication of the presence and concentration of hydrogen in the primary containment atmosphere.

6.2.5.2 System Design

The Hydrogen Sampling System is designed to continuously monitor hydrogen concentration inside containment during an accident. Portions of the hydrogen analyzers are located in the auxiliary building and the reactor building annulus and monitor the containment through stainless steel tubing coming from one point in the upper compartment and one point in the lower compartment.

These lines are equipped with normally closed, fail-closed solenoid operated and remote manual isolation valves. The return line is stainless steel and is equipped with isolation valves identical to those on the incoming lines. Because portions of the analyzers are in the annulus, those portions of the analyzers are designed to operate in the annulus following an accident. The analyzer internals are designed to process containment atmosphere at conditions up to 56 psig, 300°F, and 100 percent relative humidity. Hand switches, indicators, and alarms are located in the main control room. The analyzer electronics, as well as calibration and reagent gas lines and bottles, are located in the auxiliary building. The system is seismically qualified.

When the system is actuated, containment atmosphere is continuously drawn through a series of sample conditioners before entering the analyzer including a trap, and moisture separator. The atmosphere from the upper and lower compartments is mixed before entering the analyzer. As a result of the analyzer capability and the mixing afforded by the hydrogen collection system which draws from compartments within the containment and the containment dome, a true indication will be given of the hydrogen concentration within containment.

The analyzers are calibrated to measure hydrogen concentrations between 0 and 10 percent with an indicated accuracy in the main control room of plus or minus 1.5 percent hydrogen. This range is sufficient to measure hydrogen releases from metal-water reactions of up to 40 percent of the zirconium fuel cladding.

6.2.5.3 Design Evaluation

The Hydrogen Sampling System's primary safety function during a DBA is containment isolation and ABSCE integrity where portions of the closed instrument boundary are located outside the ABSCE.

6.2.5.4 Testing and Inspections

The Hydrogen Analyzers are routinely tested. They are calibrated using gases containing 1 volume percent hydrogen with the balance nitrogen and 4 volume percent hydrogen with the balance nitrogen.

6.2.5A Hydrogen Mitigation System

6.2.5A.1 Design Basis

The Hydrogen Mitigation System (HMS) is designed to increase the containment capability to accommodate hydrogen that could be released during a degraded core accident. The system, which is based on the concept of controlled ignition using thermal igniters to induce periodic burns to moderate energy addition rates, has been designed to be redundant, capable of functioning in a postaccident environment, seismically supported, and capable of actuation from the main control room. In addition, the system is designed to have an ample number of igniters distributed throughout the containment to mitigate the effects of hydrogen releases in the Sequoyah containment.

6.2.5A.2 System Description

To assure that any hydrogen released would be ignited at any containment location as soon as the concentration exceeded the lower flammability limit, durable thermal igniters capable of maintaining an adequate surface temperature are used. The igniter has been shown by experiment to be capable of maintaining surface temperatures in excess of the required minimum for extended periods, initiating combustion, and continuing to operate in various combustion environments.

The igniters in the HMS are equally divided into two redundant groups, each with independent and separate controls, power supplies, and locations, to ensure adequate coverage even in the event of a single failure. Manual control of each group of igniters is provided in the main control room and the status (on-off) of each group will be indicated there. A separate train of Class 1E 480 V ac auxiliary power is provided for each group of igniters and is backed by automatic loading onto the diesel generators upon loss of offsite power. Each individual circuit powers two igniters.

To assure adequate spatial coverage, a total of 68 igniters are distributed throughout the various regions of the containment in which hydrogen could be released or to which it could flow in significant quantities (see Figures 6.2.5A-1 through 6.2.5A-5). There are at least two igniters, controlled and powered redundantly, located in each of these regions. Following a degraded core accident, any hydrogen which is produced would be released into the lower compartment inside the crane wall. To cover this region, 22 igniters (equally divided between trains) are provided. Eight of these are distributed on the reactor cavity wall exterior and crane wall interior at an intermediate elevation to ensure the partial burning that accompanies upward flame propagation. Two igniters are located at the lower edge of each of the five enclosures for the four steam generators and the pressurizer, two in the top of the pressurizer enclosure, and another pair above the reactor vessel in the cavity. These 22 lower compartment igniters prevent flammable mixtures from entering the ice condenser. Any hydrogen not burned in the lower compartment is carried up through the ice condenser and into

its upper plenum. Since steam is removed from the mixture as it is passed through the ice bed, mixtures that were nonflammable in the lower compartment tend to be flammable in the ice condenser upper plenum. This phenomenon is supported by the CLASIX containment analysis code which predicts more sequential burns to occur in the upper plenum of the ice condenser than in any other region. Therefore, the system is designed to take advantage of the favorable combustion characteristics of the upper plenum by the provision of 16 igniters having two igniters in each of its eight regions. Fourteen igniters shall be located in the upper compartment: four igniters are located around the upper compartment dome, four at intermediate elevations on the outside of the steam generator enclosures, four more around the top inside of the crane wall, and one above each of the two air return fans. The air return fans provide recirculation flow from the upper compartment through several dead-ended compartments (see section 6.2.1.3.3) back into the main part of the lower compartment. To cover this region, there are pairs of igniters in each of the 8 rooms (a total of 16 igniters) through which the recirculation flow passes. The location of the HMS igniters is shown in Figures 6.2.5A-1 through 6.2.5A-5.

The components of the HMS inside containment are seismically supported and will maintain functional capability under postaccident conditions.

6.2.5A.3 Operation

The HMS will be energized manually from the main control room in accordance with emergency procedures following any accident which indicates inadequate core cooling.

6.2.5A.4 Safety Evaluation

The HMS, due to its igniter type and locations, redundancy, capability of functioning in a postaccident environment, seismic support, main control room actuation, and remote surveillance will perform its intended function in a manner that provides adequate safety margins. Extensive areas research and analysis has verified the functionability and durability of the igniters [Reference 76]. The containment structures will survive the effects of credible degraded core accidents when hydrogen hazards are mitigated by the HMS.

6.2.5A.5 Testing

Surveillance testing for the HMS consists of energizing the system from the main control room and taking voltage and current readings from each circuit at the distribution panels located in the auxiliary building. These readings are then compared to baseline data to determine whether or not both igniters on each circuit are operational. The operability of at least 33 of the 34 igniters per train would conservatively guarantee an effective coverage throughout the containment. Test intervals and restoration to operable status are provided in the technical specifications.

Igniter temperatures are checked in accordance with the applicable surveillance instructions based on the intervals as specified by the Technical Specification. Technical Specification also identifies the acceptance criteria for the igniters' temperature.

6.2.5B HYDROGEN RECOMBINERS

Two electric hydrogen recombiner units are located in the upper containment compartment, and separate control panels and power supplies for each recombiner unit are located outside containment. The power panel for each recombiner unit contains an isolation transformer plus a controller to regulate power input to the recombiner. Figure 6.2.5B-1 is a sketch of the recombiner unit.

The recombiners are no longer required to control hydrogen following a design basis accident.

6.2.6 Vacuum Relief System

6.2.6.1 Performance Objectives

The primary containment vessel is fitted with a vacuum relief (VR) system. The purpose of the VR system is to protect the vessel from an excessive external force. The VR system does not serve accident mitigating functions or serve to limit the spread of radioactivity. It is a self-activited system that limits external pressure on the vessel in the event of maloperation or inadvertent operation of systems that result in additional external forces on the containment vessel.

The containment vessel vacuum relief system assures that the external pressure differential on the containment vessel does not exceed the design external pressure of 0.5 psid. When the external pressure exceeds the valve set pressure, air flows from the annulus space through the VR valves into the containment vessel. The operation of the VR system results in a pressure reduction in the annulus space between the containment vessel and the shield building. The shield building is designed to withstand this pressure reduction in the annulus.

6.2.6.2 Design Basis

The VR system is not required to mitigate accidents such as a loss of coolant accident (LOCA). Rather, it is a system designed to protect the containment vessel in the event of excessive cooling and the subsequent external pressure on the containment vessel. The system is designed to mitigate the following abnormal occurrences:

1. Inadvertent containment spray actuation.
2. Inadvertent containment air return (CAR) system operation.
3. Simultaneous occurrence of both.

Other abnormal occurrences such as heating and ventilation equipment malfunction may result in external pressures on the containment vessel. However, the effect is always less than for those occurrences listed above.

Provisions are made in the plant design to prevent inadvertent spray operation. The causes for inadvertent spray operation are not postulated. In the event that the containment spray is inadvertently operated, the spray will quickly vaporize and saturate the upper compartment air. The temperature of the sprayed volume approaches the unsprayed wet bulb temperature in the containment upper compartment. A net external pressure on the steel containment results. The maximum external pressure on the containment vessel is the sum of (1) the maximum depressurization due to vaporization and resultant temperature decrease, and (2) the initial pressure

differential, if any. The magnitude of the maximum depressurization depends on the initial upper compartment relative humidity and on the spray water temperature. The set point of the vacuum relief system is used as the initial pressure differential. During the initial vaporization period, the CAR system is conservatively assumed to be inoperative. However, because of the large areas, small moments of inertia, and the fast responses of the ice condenser doors, pressure equalization between the ice condenser and the upper compartment and subsequently between the ice condenser and the lower compartment is taken into consideration. It is conservatively assumed that no heat is generated inside the containment during an inadvertent containment spray operation and/or a CAR system operation.

After the initial vaporization process and pressure transient due to an inadvertent spray operation, the upper containment vessel atmosphere is at 100 percent relative humidity and vaporization of spray ceases. As long as the spray is in operation, the upper and lower compartment temperatures will continue to drop until they reach the spray water temperature. During this period, the CAR system may also be in operation, thus transferring air and water vapor from the upper compartment to the lower compartment and from the lower compartment to the ice condenser. The CAR system brings cold, dry air from the ice condenser into the upper compartment, further dropping the upper compartment temperature and pressure.

When the upper compartment pressure drops to the containment vessel vacuum relief set pressure, the vacuum relief valves respond. As a result of the containment vessel VR system operation, there is a pressure reduction in the annulus. This pressure reduction is a principle design feature of the VR system, for it effectively reduces the external pressure differential across the containment vessel, thereby reducing the required vacuum relief capacity.

The design basis, parameters, and resultant design for the VR system are summarized in Table 6.2.6-1.

6.2.6.3 System Design

The VR system is designed in accordance with the containment system general design criteria of Section 3.1. The system is designed to withstand a SSE without failure.

The containment vessel VR system has three identical units, all located on the dome, at the same elevation, and 120° apart. One of the three units is redundant. In essence, each unit contains a vacuum relief valve in series with a containment isolation valve, the vacuum relief valve being outside of the isolation valve, as shown in Figure 9.4.7-1. The units are installed such that there is sufficient space between the VR system and the Shield Building to prevent contact during seismic or pressure transient motion and to allow for an adequate airflow path.

Each containment vessel vacuum relief valve is a 24 inch, self-actuated, horizontally installed, swing-disc valve, with an elastomer seat. The seat material will withstand post-LOCA temperature, pressure, and radiation conditions. Each unit has a design airflow rate of 28 pounds per second at a pressure differential of 0.5 psid across the entire unit. Each normally closed vacuum relief valve is equipped with limit switches so that open and closed positions of the valve are indicated in the Main Control Room (MCR). The opening of any of these valves is indicated in the MCR. The valves begin opening at a containment external pressure differential of 0.1 psid and will be fully open in 2.2 seconds for a vacuum relief system design basis event.

Each containment vessel vacuum relief isolation valve is a pneumatically operated butterfly valve with an elastomer seat. The valve, including seat material, will withstand a post-LOCA temperature, pressure, and radiation conditions. Two separate trains of control air supplies are available to the two independent solenoid valves which power the isolation valve. The isolation valve, which is normally open, fails open, and will close when containment high pressure reaches the set pressure of 1.5 psid. The high pressure signal is developed from either of two independent sets of three pressure sensors and is completely independent of other containment isolation signals for other systems. Each isolation valve is equipped with a limit switch so that open and closed positions are indicated in the MCR.

6.2.6.4 Design Evaluation

The containment vessel vacuum relief units are located in the annulus and thus are not affected by flood, wind, ice, snow, or tornado. The units are located such that they are also free from the danger of missile damage.

The relief capacities and set pressure of the VR system are based on conservative combinations of parameters. Extra margin is allowed for deviations in the actual vacuum relief flow rate. Based on the assumptions, analyses, and on the specified design limits, it was found that for all events requiring mitigation by the vacuum relief system, the integrity of the primary containment is assured.

Figure 6.2.6-1 shows the upper compartment pressure transient during the initial vaporization stage as a function of time after inadvertent spray initiation. The CAR system is conservatively assumed to be operating during this period. The design case is for an initial upper compartment relative humidity of 4 percent. A principle aspect considered in the design of the vacuum relief system is that the initial containment vessel pressure is not necessarily the same as that in the annulus space. Thus, the pressure transient due to inadvertent spray operation must be considered as an addition to the initial pressure differential across the containment vessel. This consideration is, to a large extent, responsible for the low set pressure of 0.1 psid for the containment vessel vacuum relief valves. The annulus is assumed to have a negative pressure of 5 inches water gauge initial to the inadvertent spray saturation transient and the containment vessel is 0.1 psi below the annulus pressure (i.e., at the setpoint of the vacuum relief system). The analyses show that the design limit of 0.5 psid for the external pressure differential on the steel containment is not exceeded during the short term initial vaporization stage of an inadvertent spray operation. For the initial vaporization stage, the minimum upper compartment pressure occurs at about 12 seconds after the spray is initiated. After that time, the rise in water vapor pressure and the effects of the vacuum relief system are greater than the drop in pressure due to cooling. The upper compartment atmosphere becomes 100 percent saturated at about 24 seconds as indicated in Figure 6.2.6-3.

As indicated in Reference 92, the vacuum relief system is assumed to operate 2.2 seconds after the transient begins. One vacuum relief valve is assumed to fail to open in keeping with single failure criteria. The remaining two vacuum relief valves are assumed to be fully open at 2.2 seconds after the initiation of the inadvertent spray. Since the transient begins with the containment at the setpoint of the VR system, the vacuum relief units would begin to open at the initiation of the containment spray. However, no credit is taken for flow through the VR valves that would occur while they are opening.

Figure 6.2.6-1 thru 6.2.6-3 show the short and long term transients for containment differential pressure, temperature, and relative humidity for inadvertent spray and air return fan operation. The compartment relative humidity is initially at 4 percent. A conservatively low containment VR system capacity of 28 pounds per second at 0.5 psid is used, assuming that the

redundant unit is not operative. As indicated in Reference 92, an initial negative pressure of 5 inches water gauge is assumed for the annulus and the containment vessel initial pressure is again 0.1 psi below the annulus pressure. Figure 6.2.6-1 shows that for initial containment relative humidity at 4 percent, the worst pressure transient occurs during the initial saturation stage.

In the event of an inadvertent air return fan operation without operation of the containment spray, the containment atmosphere would eventually approach ice bed temperatures. However, even with both fans running, the pressure transient is much slower than that shown in Figure 6.2.6-1 because of the lower cooling rate. The containment external pressure (i.e., annulus pressure) is essentially equal to that of the vacuum relief unit set pressure. The annulus pressure, if unrelieved, would drive the shield building external pressure to approach the design value. However, the containment annulus vacuum control subsystem provides a flow path for air from the auxiliary building to go into the annulus, if necessary, so that the shield building external design pressure of 2 psid is never reached.

In setting the design flow rates and pressure setting for the VR system, considerable design effort and safety margins were made in providing proper annulus pressure reduction so that the integrities of both the containment vessel and the shield building are assured. Assurance of integrity is achieved by making certain that at a particular driving head both the maximum and minimum flow rates are within design limits, considering the operation and non-operation of the redundant units and considering all design basis accidents within the containment.

6.2.6.5 Testing and Inspection

All components of the VR system are readily accessible for inspection, maintenance, and testing. The VR system is designed in accordance with the criteria set forth in section 3.1. A test connection between the vacuum relief valve and the isolation valve is provided in each unit for periodic pressure and leak testing, in conformance with Appendix J of 10 CFR 50, with approved exemptions. The system is designed and tested in accordance with applicable ASME Codes. Tests made during fabrication include hydrostatic pressure test, leak test across seals, and flow capacity test on VR system components. In-place tests include periodic tests on the actuator for its ability to move the disc and to operate the position indicating lights in the MCR.

6.2.6.6 Materials

The VR system is not a safety feature system, although the valves will act as containment isolation valves on containment high pressure. The materials used meet the Class 2 requirements of the draft ASME Code for Pumps and Valves for Nuclear Power, 1968 Edition. The radiolytic or pyrolytic decomposition product, if any, of each material will not interfere with the safe operation of any Engineered Safety Feature System.

6.2.7 References

1. "Maximum Flow Rate of Single Component, Two-Phase Mixture," F. J. Moody ASME Publication, Paper No. 64-HT-35.

2. "Steam-Water Critical Flow From High Pressure Systems," F. R. Zaloudek, Interim Report, HW-68936, Hanford Works, 1964.

3. "The Two-Phase Critical Flow of One-Component Mixtures in Nozzles, Orifices, and Short Tubes," R. E. Henry and H. K. Fauske, Journal of Heat Transfer, May 1971, pp. 179-187.

4. "A Study of One- and Two-Component, Two-Phase Critical Flows at Low Qualities," R. E. Henry, ANL-7430.

5. "An Experimental Study of Low-Quality, Steam-Water Critical Flow at Moderate Pressures," R. E. Henry, ANL-7740.

6. "Flash: A Program for Digital Simulation of the Loss-of-Coolant Accident," F. W. Kramer, Westinghouse Atomic Power Division, WCAP-1678, January 1961.

7. "The Critical Flow of Hot Water Through Short Tubes," F. R. Zaloudek, HW-77594, Hanford Works, 1963.

8. Reference deleted per Amendment 6.

9. Reference deleted per Amendment 6.

10. Reference deleted per Amendment 6.

11. Reference deleted per Amendment 6.

12. W. H. McAdams, Heat Transmission, McGraw-Hill 3rd Edition, 1954, p. 172.

13. Reference deleted per Amendment 6.

14. Salvatori, R. (approved), "Ice Condenser Containment Pressure Transient Analysis Method," WCAP-8078, March 1973.

15. Salvatori, R. (approved), "Ice Condenser Containment Pressure Transient Analysis Method," WCAP-8077, March 1973.

16. Reference deleted per Amendment 6.

17. Deleted by Amendment 20

18. Grimm, N. P., and Colenbrander, H. G. C., "Long Term Ice Condenser Containment Code-LOTIC Code," WCAP-8354-P-A, July 1974 (Proprietary), WCAP-8355-A (Nonproprietary), July 1974.

19. Letter, W. H. Arnold, Westinghouse to Dr. Peter A. Morris, USAEC, March 1971.

20. Reference deleted by Amendment 14.

21. Newby, D., "Test Plans and Results for the Ice Condenser System," WCAP-8110, Supplement 6, May 1974.

22. Reference deleted per Amendment 6.

23. Reference deleted per Amendment 6.

24. Reference deleted per Amendment 6.

25. Reference deleted by Amendment 14.

26. Shepard, R. M., Massie, H. W., Mark, R. H., and Docherty, P. J., "Westinghouse Mass and Energy Release Data for Containment Design," WCAP-8264-P-A, Revision 1, June 1975 (Proprietary) and WCAP-8312-A, Revision 1, June 1975 (Nonproprietary).

27. Yen, Y. C., Zendor, A., Zavohik, S, and Tien, C., "Condensation - Melting Heat Transfer in the Presence of Air," Thirteen National Heat Transfer Conference, AICHE - ASME Denver.

28. King, H. W., "Handbook of Hydraulics," 4th Edition, 1954.

29. "Final Report Ice Condenser Full Scale Section Test at the Waltz Mill Facility," WCAP-8282 (Proprietary), February 1974, WCAP-8211, Appendix (Nonproprietary), May 1974.

30. Hsieh, T., and Raymund, M., "Long Term Ice Condenser Containment Code-LOTIC Code," WCAP-8354-P-A, Supplement 1 (Proprietary), June 1975, and WCAP-8355 Supplement 1 (Nonproprietary), June 1975.

31. C. Eicheldinger, Letter of 10/22/76, NS-CE-1250. C. Eicheldinger, Letter of 6/14/77, NS-CE-1453.

32. C. Eicheldinger, Letter of 12/7/77, NS-CE-1626.

33. John F. Stolz, Letter of 5/3/78, "Evaluation of Proposed Supplement to WCAP-8354 (LOTIC-3)."

34. Land, R. E., "Mass and Energy Releases Following a Steam Line Rupture," WCAP-8822, September 1976.

35. Crane Technical Paper No. 410, "Flow of Fluid."

36. Letter, NRC to C. Eicheldinger, 5/10/78, Staff Approval of LOTIC-3.

37. Containment Isolation Codes and Standards
    a. ANSI N45.4-1972, Leakage-Rate Testing of Containment Structures for Nuclear Power Reactors.
    b. ANSI/ANS 56.8-1987 and 1994, Containment Systems Leakage Rate Testing Requirements.
    c. ANSI/ASME N45.2.6-1978, Qualification of Inspection Examination and Testing Personnel for Nuclear Power Plants.
    d. ANSI N271-1976, Containment Isolation Provisions for Fluid Systems
    e. ASME Boiler and Pressure Vessel Code, Division 1, Section XI, 1989 Edition.
    f. ASME/ANSI OM-10, Inservice Testing of Valves in Light-Water Reactor Power Plants, OMa-1988 Addenda to the OM-1987 Edition.

g. ASNT-TC-1A-1984, Recommended Standard for the Qualification of NDE Personnel.
h. BN-TOP-1, Rev. 1, Testing Criteria for CILRT of Primary Containment Structures for Nuclear Structures for Nuclear Power Plants, Bechtel Power Corporation.
i. NEI 94-01 “Nuclear Energy Institute Industry Guidelines for Implementing Performance-Based Option of 10CFR50, Appendix J”.
j. NuReg-1493, “Performance Based Leak Test Program”.
k. Regulatory Guide 1.163-September 1995 - “Performance Based Containment Leak-Test Program”.

38. Sequoyah Nuclear Plant Design Criteria and Design Guides:
    a. SQN-DC-V-2.15 Containment Isolation
    b. SQN-DC-V-2.16 Single Failure Criteria
    c. DG-M18.4.3 Containment Penetration and Isolation Valve Leak Rate Testing
    d. SQN-DC-V-2.3 Steel Containment Vessels

39. TVA Containment Isolation submittals to the NRC
    a. Dec 31, 1986 (Type C testing exemption)
    b. Feb 3, 1987 (RHR and Vacuum Relief GDC 55-56 exemption)
    c. April 8, 1987 (RHR and Vacuum Relief GDC 55-56 exemption)
    d. Jan 23, 1987 (Seal Injection GDC 55 exemption)
    e. May 30, 1986 (Complete evaluation of isolation provisions)
    f. Sept 24, 1986 (Reflecting TVA/NRC agreements and reevaluation)
    g. Jan 2, 1987 (additional information, position indication, leak detection)
    h. July 11, 1988 (local leak rate test of CCS and RHRSS inboard check valves)
    . Aug. 8, 1988 (local leak rate test of CCS and RHRSS inboard check valves)
    j. Sept. 27, 1993 (Request for Appendix J Schedular Exemption) S64930923 800
    k. March 10, 1993 (Tech. Spec. changes 93-02 removal of Appendix J details from Tech. Specs) S64930226 802
    l. Feb. 4, 1994 (Request for Appendix J Schedular Exemption) S64940204 801

40. NRC Containment Isolation Documents to TVA
    a. Exemption from 10CFR50 Appendix J Type C Leak Rate Testing (TAC 64388, 64389) Jan 15, 1988. (RHR, UHI, and Relief Valve discharge to PRT)
    b. Exemption from 10CFR50 Appendix A, GDC 56 for Vacuum Relief Lines (TAC 64623, 64624) Dec 14, 1987.
    c. Exemption from 10CFR50 Appendix A, GDC 55 for RHR Line (TAC 64623, 64624) Dec 14, 1987.
    d. Exemption from 10CFR50 Appendix A, GDC 55 for Seal Injection Lines (TAC 64569, 64570) Dec 4, 1987.
    e. Safety Evaluation Report NUREG-1232 Volume 2, Section 3.6.
    f. Safety Evaluation Report NUREG-1232 Volume 2, Supplement 1, Section 3.6.
    g. Safety Evaluation Report NUREG-0011 and its Supplements , Section 3.6 and 6.2 as applicable.
    h. Inspection Report 50-327/328 86-20
    i. Exemption from 10CFR50 Appendix J Type C leak Rate Test Sept. 22 1988. (CSS and RHRSS inboard check valves)
    j. Exemption for Unit 2 CILRT not to have increased frequency 1993.

41. Reference deleted per Amendment 6.

42. Reference deleted per Amendment 6.

43. Reference deleted per Amendment 6.

44. Reference deleted per Amendment 6.

45. Reference deleted per Amendment 6.

46. Reference deleted per Amendment 6.

47. Reference deleted per Amendment 6.

48. Reference deleted per Amendment 6.

49. Reference deleted per Amendment 6.

50. Reference deleted per Amendment 6.

51. Reference deleted per Amendment 6.

52. Reference deleted per Amendment 6.

53. Reference deleted per Amendment 6.

54. Reference deleted per Amendment 6.

55. Reference deleted per Amendment 6.

56. Reference deleted per Amendment 6.

57. Reference deleted per Amendment 6.

58. Reference deleted per Amendment 6.

59. Reference deleted per Amendment 6.

60. Reference deleted per Amendment 6.

61. Reference deleted per Amendment 6.

62. Bordelon, Frank M., SATANV, WCAP-7750, "A Computer Space Time Dependent Analysis of Loss of Coolant," August 1971.

63. MONSTER - Containment Analysis Computer Program, TVA Topical Report, TVA-TR85-01.

64. "Westinghouse LOCA Mass and Energy Release Model For Containment Design - March 1979 Version," WCAP-10325-P-A May 5, 1983 (Proprietary), WCAP-10326-A, May 5, 1983 (Non-Proprietary).

65. NRC to Dan A. Nauman, April 24, 1991, Safety Evaluation Report on Main Steam Line Breaks in Ice Condenser Containments.

66. Engineering Evaluation (RIMS B45 921116 253) for SDCN S-09057 - Credit for "Leak Before Break" Analysis on Reactor Cavity Nozzle Covers.

67. Letter from B. J. Garry of Westinghouse to P. G. Trudel of TVA dated June 6, 1991, TVA-91-170 (B25 910614 252).

68. Letter from B. J. Garry of Westinghouse to P. G. Trudel of TVA dated December 11, 1991, TVA-91-342 (B25 911226 001).

69. Thomas A. Lordi, Westinghouse Electric Corporation to John Hosmer, Tennessee Valley Authority, Sequoyah Nuclear Plants, January 27, 1988 (TVA-88-527).

70. Dederer, J. T. and Ball, T. W., "Evaluation of Containment Coatings for Sequoyah," WCAP-11534, September 15, 1987.

71. Westinghouse to M. J. Burzynski, TVA 93-243, "Coatings in Containment Assessment - Additional Information," October 21, 1993.

72. Thompson, C.M. and Smith, L.C., “Tennessee Valley Authority Nuclear Plant Units 1 and 2 - Containment Integrity Reanalysis Engineering Report,” WCAP-12455, Revision 01; Supplement 1R, September 2001 (RIMS B88 011102 801).

73. Sequoyah Containment Isolation System Description Document, N2-88-400.

74. Malinowski, D.D., “Iodine Removal In The Ice Condenser System,” WCAP-7426, March, 1970 (RIMS S18 900327 035).

75. Letter from T.A. Lordi of Westinghouse to J.B. Hosmer of TVA dated September 25, 1987, TVA-87-805 (RIMS B25 871003 013).

76. Letter from L. M. Mills to E. Adensam dated August 31, 1983.

77. Tayami, Takasi, “Interim Report on Safety Assessments and Facilities Establishment Project in Japan for Period Ending June, 1965 (No. 1).”

78. “Westinghouse ECCS Evaluation Model - 1981 Version,” WCAP-9220-P-A; Revision 1, February 1982 (Proprietary), WCAP-4221-A, Revision 1 (Non-Properitary).

79. Docket No. 50-315, “Amendment No. 126, Facility Operating License No. DPR-58 (TAC No. 7106), for D. C. Cook Nuclear Plant Unit 1,” June 9, 1989.

80. EPRI 294-2, “Mixing of Emergency Core Cooling Water With Steam; Y3 Scale Test and Summary,” (WCAP-8423), Final Report, June 1975.

81. ANSI/ANS-5.11979, American National Standard for Decay Heat Power in Light Water Reactors,” August 1979.

82. TVAN Calculation TI453, Revision 3, Iodine Loading on the EGTS Charcoal Absorbers and Temperature in the EGTS ACUs Following a LOCA-DBA.

83. Letter from NRC to S. A. White dated March 21, 1988, Hydrogen Analyzer Operability (RIMS A02 880323 007).

84. Westinghouse Letter TVA-03-19, dated February 12, 2003, “Steam Generator Compartment Pressurization Following a Steam Line Break for the Model 57AG Replacement Steam Generator.”

85. R. Gridley to NRC, September 16, 1987, “Sequoyah Nuclear Plant – Containment Coatings.”

86. NUREG-1232, Volume 2, “Safety Evaluation Report on Tennessee Valley Authority: Sequoyah Nuclear Performance Plan,” May 1988.

87. Randy Douet to NRC, September 1, 2005, “Sequoyah Nuclear Plant – NRC Generic Letter 2004-02, Potential Impact of Debris Blockage on Emergency Recirculation During Design Basis Accidents at Pressurized Water Reactors – Second Response.”

88. Nuclear Energy Institute Guidance Report No. NEI-04-07, “Pressurizer Water Reactor Sump Performance Evaluation.”

89. SQN Memo, “Documentation of Historical Lower Containment Temperature and Ice Mass Inputs into the Sequoyah Containment Temperature Analysis of Record”, (EDMS# B85111107001)

90. SQN Letter, “RWST Volume Requirement for Steamline Break”, (RIMS# B25901226009)

91. Westinghouse Letter, TVA-09-69, dated September 8, 2009, “Reactor Coolant Loop Structural Analysis Evaluation of Unit 2 Replacement Steam Generators - Phase 2.

92. SQN Calculation, SQN APS2037 “Analysis of Inadvertent Containment Spray.”

93. SQN Drawing Series, 46W501 “Architectural ABSCE Boundary”

TABLE 6.2.1-1 (Sheet 1)

GENERAL INFORMATION RELATED TO CONTAINMENT

I. General Information

A.	Design pressure, psig	12
B.	Design temperature, °F	327
C.	Free volume, ft^3	1,186,920
D.	Design and maximum allowable leak rates, %/day	0.25

II. Initial Conditions

A. Reactor Coolant System (at design overpower of 100.7% and at normal liquid levels)

1. Reactor power level, mwt	3,479.2
2. Average coolant temperature, °F	578.2
3. Mass of Reactor Coolant System liquid, lbm	538,640
4. Mass of Reactor Coolant System liquid, lbm	4660
5. Liquid plus steam energy, BTU (relative to 32°F)	334.6×10^6

B. Containment

1. Normal pressure, psig	0
2. Normal inside temperature, °F	
- upper compartment	85
- lower compartment	100
- ice condenser	15
3. Outside temperature, °F	Not applicable
4. Average relative humidity, %	30
5. Maximum essential raw water temperature, °F	87
6. Maximum refueling water temperature (if applicable), °F	105
7. Initial ice mass (min.), lb	1.916×10^6

C. Stored Water (as applicable)

1. Refueling water storage tank, gal	375,000
2. Quench spray tank, ft^3	Not applicable
3. Four safety injection accumulators, ft^3)	4,372 maximum 4,253 minimum per unit
4. Condensate storage tanks, ft^3	106,337 total of two tanks for both units

III. The Design Basis Accident

See Figures 6.2.1-15, 6.2.1-16, 6.2.1-17, 6.2.1-18, and 6.2.1-19

IV. Mass and Energy Addition Tables

See Tables 6.2.1-13, 6.2.1-15, and 6.2.1-18

TABLE 6.2.1-1 (Sheet 2)

GENERAL INFORMATION RELATED TO CONTAINMENT

V. Passive Heat Sinks - Upper Compartment

Structure	Heat Transfer Area (ft^2)	Thickness and Material (As Noted)	Thermal Conductivity (BTU/ft hr F)	Volume Heat Capacity (BTU/ft^3 F)
Operating Deck	4,452	1.1 ft concrete	0.84	30.24
	7,749	6.3 mils coating 1.1 ft concrete	0.087 0.84	29.8 30.24
	672	1.6 ft concrete	0.84	30.24
	11,445	6.3 mils coating 1.6 ft concrete	0.087 0.84	 30.24
	4,032	0.26 in. stainless steel 1.6 ft concrete	9.87 0.84	59.22 30.24
	798	15.7 mils coating 1.6 ft concrete	0.087 0.84	29.8 30.24
Containment Shell	22,890	7.8 mils coating 0.46 in. carbon steel	0.21 27.3	29.8 59.2
	18,375	7.8 mils coating 0.58 in. carbon steel	0.21 27.3	29.8 59.22
	2,100	7.8 mils coating 1.51 in. carbon steel	0.21 27.3	29.8 59.22
Misc. Steel	4,095	7.8 mils coating 0.26 in. carbon steel	0.21 27.3	29.8 59.22
	3,559	7.8 mils coating 0.46 in. carbon steel	0.21 27.3	29.8 59.22
	3,538	7.8 mils coating 0.72 in. carbon steel	0.21 27.3	29.8 59.22
	273	7.8 mils coating 1.57 in. carbon steel	0.21 27.3	29.8 59.2

TABLE 6.2.1-1 (Sheet 3)

GENERAL INFORMATION RELATED TO CONTAINMENT

V. Passive Heat Sinks-Lower Compartment

Structure	Heat Transfer Area (ft^2)	Thickness and Material (As Noted)	Thermal Conductivity (BTU/ft hr F)	Volume Heat Capacity (BTU/ft^3F)
Operating Deck	7,507	1.1 ft concrete	0.84	30.24
	2,971	1.6 mils coating 1.1 ft concrete	0.087 0.84	29.8 30.24
	2,131	1.6 ft concrete	0.84	30.24
	798	6.3 mils coating 1.84 ft concrete	0.087 0.84	29.8 30.24
	2,646	2.1 ft concrete	0.84	30.24
	210	6.3 mils coating 2.1 ft concrete	0.087 0.84	29.8 30.24
Crane Wall	14,752	1.6 ft concrete	0.84	30.24
	3,570	6.3 mils coating 1.6 ft concrete	0.087 0.84	29.8 30.24
Containment Floor	567	1.6 ft concrete	0.84	30.24
	7,612	6.3 mils coating 1.6 ft concrete	0.087 0.84	29.8 30.24
Interior Concrete	3,780	1.1 ft concrete	0.84	30.24
	567	1.1 ft concrete	0.84	30.24
	2,992	2.1 ft concrete	0.84	30.24
	2,384	0.26 in. stainless steel	9.8	59.2
		2.1 ft concrete	0.84	30.24
	2,373 1,480	2.1 ft concrete 6.3 mils coating 2.1 ft concrete	0.84 0.087 0.84	30.24 29.8 30.24

TABLE 6.2.1-1 (Sheet 4)

GENERAL INFORMATION RELATED TO CONTAINMENT

V. Passive Heat Sinks-Dead Ended Compartment

Structure	Heat Transfer Area (ft^2)	Thickness and Material (As Noted)	Thermal Conductivity (BTU/ft hr F)	Volume Heat Capacity (BTU/ft^3F)
Misc. Steel	12,915	7.8 mils coating 5.3 in. carbon steel	0.22 27.3	14.7 59.2
	7,560	7.8 mils coating 0.78 in. carbon steel	0.22 27.3	14.7 59.2
	5,250	7.8 mils coating 1.1 in. Carbon steel	0.22 27.3	14.7 59.2
	2,625	7.8 mils coating 1.45 in. Carbon steel	0.22 27.3	14.7 59.2
	1,575	7.8 mils coating 1.7 in. carbon steel	0.22 27.3	14.7 59.2
Containment Shell	3,045	7.8 mils coating 0.78 in. carbon steel	0.22 27.3	14.7 59.2
	4,305	7.8 mils coating 1.1 in. carbon steel	0.22 27.3	14.7 59.2
	4,305	7.8 mils coating 1.25 in. carbon steel	0.22 27.3	14.7 59.2
	3,780	7.8 mils coating 1.37 in. carbon steel	0.22 27.3	14.7 59.2
	4,305	7.8 mils coating 1.51 in. carbon steel	0.22 27.3	14.7 59.2
Crane Wall	7,255	1.6 ft concrete	0.84	30.24
	3,801	6.3 mils coating 1.58 ft concrete	0.087 0.84	14.7 30.24
Containment Floor	4,809	6.3 mils coating 2.1 ft concrete	0.087 0.84	14.7 30.24
Interior Concrete	9,870	1.1 ft concrete	0.84	30.24
	3,948	6.3 mils coating 1.1 ft concrete	0.087 0.84	14.7 30.24

TABLE 6.2.1-1 (Sheet 5)

GENERAL INFORMATION RELATED TO CONTAINMENT

VI. Engineered Safety Systems Information	Full Capacity	Value Used for Containment Analysis
A. Passive Safety Injection Systems		
1. Low-pressure Accumulators		
a. Number of accumulators	4	4
b. Volume of water injected, ft^3 each minimum	1,103	1,103
c. Minimum pressure, psig	624	600
B. Active Safety Injection Systems		
1. High-pressure Safety Injection		
a. Number of injection lines	4	4
b. Number of pumps (centrifugal charging)	2	1
c. Flow rate, gpm each	150	600.7
2. Intermediate Pressure Safety Injection		
a. Number of injection lines	4	4
b. Number of pumps (safety injection)	2	1
c. Flow rate, gpm each	425	597
3. Low-pressure Safety Injection (RHR)		
a. Number of injection lines	4	4
b. Number of pumps	2	1
c. Flow rate, gpm each	4,500	Varies
C. Containment Spray Subsystems		
1. Containment Spray		
a. Number of lines	2	1
b. Number of pumps	2	1
c. Number of headers	2	1
d. Flow rate, gpm each header	4,750	4,750

TABLE 6.2.1-1 (Sheet 6)

GENERAL INFORMATION RELATED TO CONTAINMENT

VI. Engineered Safety Systems Information	Full Capacity	Value Used for Containment Analysis
2. RHR Spray		
a. Number of lines	2	1
b. Number of pumps	2	1
c. Number of headers	2	1
d. Flow rate, gpm each header	2,000	1,277
D. Containment Air Return Fans		
1. Number of units	2	1
2. Flow rate, cfm each	42,000	40,000
E. Lower Containment Cooling Fan Systems		
1. Number of units	4	0
F. Heat Exchangers (Note 1)		
1. RHR System		
a. Type	Shell & U-Tube (single - pass)	Shell & U-Tube (single - pass)
b. Number (per unit)	2	1
c. Heat exchanger surface area, ft^2 each	4,500	4,275
d. Tube plugging, % each	0	10
e. Heat transfer capacity, 10^6 BTU/hr each	34.15	28.3
f. Heat transfer coefficient (UA), 10^6 BTU/hr-°F each Modeled with 5% tube plugging and maximum fouling factor		1.402 (modeled as counterflow type heat exchanger)

TABLE 6.2.1-1 (Sheet 7)

GENERAL INFORMATION RELATED TO CONTAINMENT

VI. Engineered Safety Systems Information	Full Capacity	Value Used for Containment Analysis
	Shell & U-Tube (Single - pass)	Shell & U-Tube (Single - pass)
g. Flow rates:		
1. Tube Side, gpm each at 3600 sec	4,500	2,337
a. RHR spray, gpm each	2,000	1,277
b. RHR to RCS in spray mode gpm each	2,500	1,060
2. Shell side, gpm each	5,000	5,000
h. Source of cooling water	CCS	CCS
i. Flow begins, seconds	Automatic level control	1,691
2. Containment Spray System		
a. Type	Shell & Tube Counterflow	Shell & U-Tube Counterflow
b. Number (per unit)	2	1
c. Heat exchanger surface area, ft^2 each	14,130 11,680 (1B) 13,915 (1A)	12,246
d. Tube plugging, % each	0	13.3
e. Heat transfer capacity, 10^6 BTU/hr each	95	75.3
f. Heat transfer coefficient (UA) 10^6 BTU/hr-°F each	3.55 3.88 (1B) 3.61 (1A)	2.953 (Modeled as counterflow type heat exchanger)
g. Flow rates		
1. Tubeside (spray flow) gpm each	4,750	4,750
2. Shell side, gpm each	6,028	3,400

TABLE 6.2.1-1 (Sheet 8)

GENERAL INFORMATION RELATED TO CONTAINMENT

VI. Engineered Safety Systems Information	Full Capacity	Value Used for Containment Analysis
h. Source of cooling water	ERCW	ERCW
i. Flow begins, seconds	226 (maximum)	250
3. Component Cooling Water		
a. Type	Plate	Shell & Tube* (Split flow)
b. Number (per train)	2	1
c. Heat exchanger surface area, ft^2 per train	6,135	16,163
d. Tube plugging, % each	0	15
e. Heat transfer capacity, 10^6 BTU/hr per train	89.7	32.55
f. Heat transfer coefficient (UA) 10^6 BTU/hr-°F each, shell and tube heat exchangers modeled with 5% tube plugging, maximum fouling factor, and a split flow correction factor of 0.72		
Plate heat exchanger (per pair)	4.05	2.793 (Modeled as counterflow type heat exchanger)
g. Flow rates		
1. Tubeside (ERCW), gpm each	10,000	4,000
2. Shellside, (CCS) gpm each	8,000	5,000
h. Source of Cooling Water	ERCW	ERCW

NOTES: 1. Full capacity refers to rated condition.

* Values used for containment analysis are based on shell and tube heat exchangers. These have been replaced by plate heat exchangers whose values bound the shell and tube heat exchangers.

TABLE 6.2.1-2

SECONDARY CONTAINMENT CHARACTERISTICS

I. Shield Building

A. Annulus air volume: 375,000 Ft^3

B. Allowable inleakage rate at 0.5 in. wg.: 500 cfm

C. Recirculation EGTS fans*
1. Number: 2
2. Type: Centrifugal
3. Air flow rate: 4000 cfm each at 11 in. wg
4. Filters in EGTS air cleanup system:

Type	Banks/Train	Number/Bank	Number/Train	Total Number
Prefilter	1	2	2	4
HEPA	2	4	8	16
Carbon	2	12	24	48

D. Annulus Vacuum Exhaust fans**

1. Number: 4 (2 for each reactor unit)
2. Type: Centrifugal
3. Air flow rate: 1000 cfm each at 6.5 in. wg

II. Auxiliary Building

A. Free volume: 3,480,000 Ft^3

B. Exhaust fans (Auxiliary Building Gas Treatment System)

1. Number: 2
2. Type: Centrifugal
3. Air flow rate: 9000 cfm at 8 in. Wg
4. Filters

Type	Banks/Train	Number/Train	Total Number
Prefilter	1	9	18
HEPA	1	9	18
Carbon	1	27	54

*The fans described are the air cleanup subsystem fans in the Emergency Gas Treatment System that operate only in the postaccident period.

**The fans described are the annulus vacuum control fans in the Emergency Gas Treatment System that operate only during nonaccident operations.

TABLE 6.2.1-3

CONTAINMENT SUBCOMPARTMENT PRESSURES

Type of Break	Location of Peak and Peak Differential Pressure	Peak Pressure (psig) Unaugmented	*Peak Differential Pressure (psi) Unaugmented
DECL	Element 1	15.7	12.1
DECL	Element 2	13.3	8.4
DECL	Element 3	12.2	7.2
DECL	Element 4	12.3	7.3
DECL	Element 5	13.1	8.3
DECL	Element 6	15.2	11.8
DECL	Element 40	11.7	11.7
DECL	Element 41	9.8	9.8
DECL	Element 42	9.0	9.0
DECL	Element 43	9.0	9.0
DECL	Element 44	9.6	9.6
DECL	Element 45	11.4	11.4
DECL	Element 7-8-9	7.3	5.4
DECL	Element 10-11-12	7.3	4.9
DECL	Element 13-14-15	7.3	4.7
DECL	Element 16-17-18	7.3	4.8
DECL	Element 19-20-21	7.3	4.9
DECL	Element 22-23-24	7.3	5.5
DEHL	Element 1	15.3	14.9
DEHL	Element 2	11.5	11.2
DEHL	Element 3	10.2	8.6
DEHL	Element 4	10.1	8.4
DEHL	Element 5	11.7	11.4
DEHL	Element 6	15.0	14.7
DEHL	Element 40	10.9	10.9
DEHL	Element 41	8.2	8.2
DEHL	Element 42	8.0	8.0
DEHL	Element 43	8.0	8.0
DEHL	Element 44	8.4	8.4
DEHL	Element 45	10.8	10.8
DEHL	Element 7-8-9	8.5	8.2
DEHL	Element 10-11-12	7.4	6.9
DEHL	Element 13-14-15	7.4	6.2
DEHL	Element 16-17-18	7.4	6.2
DEHL	Element 19-20-21	7.4	7.0
DEHL	Element 22-23-24	8.5	8.2

*All differential pressures are with respect to the upper compartment, except elements 40 through 45, which are across the containment shell.

TABLE 6.2.1-4

PEAK DIFFERENTIAL PRESSURES ASSUMING A 15% REDUCTION
IN FLOW AREA IN THE ICE CONDENSER

Description	Nodes	Differential Pressure (psid)
Across the Containment Shell	40	11.9
Across the Operating Deck	1-25	15.0
Across the Lower Crane Wall	1-34	15.0
Across the Upper Crane Wall	7-9 & 25	8.7

TABLE 6.2.1-5 (Sheet 1)

SENSITIVITY STUDIES FOR D. C. COOK PLANT

Parameter	Change Made From Base Value	Change In Operating Deck ΔP	Change In Peak Pressure Against the Shell
Blowdown*	+10%	+ 11%	+ 12%
Blowdown	- 10%	- 11%	- 12%
Blowdown	- 20%	- 20%	- 23%
Blowdown	- 50%	- 50%	- 53%
Break Compartment Inertial Length	10%	+ 4%	+ 1%
Break Compartment Inertial Length	- 10%	- 4%	- 1%
Break Compartment Volume	+10%	- 2%	- 1%
Break Compartment Volume	- 10%	+ 2%	+ 1%
Break Compartment Vent Areas	+10%	- 6%	- 5%
Break Compartment Vent Areas	- 10%	+ 8%	+ 5%
Door Port Failure in Break Compartment	one door port fails to open	+ 1%	- 1%
Ice Mass	+ 10%	0	0
Ice Mass	- 10%	0	0
Door Inertia	+ 10%	+ 1%	0
Door Inertia	- 10%	- 1%	0
All Inertial Length	+ 10%	+ 5%	+ 4%
All Inertial Length	- 10%	- 5%	- 3%
Ice Bed Loss Coefficients	+ 10%	0	0
Ice Bed Loss Coefficients	- 10%	0	0
Entrainment Level	0% Ent.	- 27%	- 11%
Entrainment Level	30% Ent.	- 19%	- 15%
Entrainment Level	50% Ent.	- 13%	- 12%
Entrainment Level	75% Ent.	- 6%	- 6%

* For DEHL break in element 6.

TABLE 6.2.1-5 (Sheet 2)

SENSITIVITY STUDIES FOR D. C. COOK PLANT

Parameter	Change Made From Base Value	Change In Operating Deck ΔP	Change In Peak Pressure Against the Shell
Lower Compartment Loss Coefficients	+ 10%	0	0
Lower Compartment Loss Coefficients	- 10%	0	0
Cross Flow in Lower Plenum	low estimate of resistance	0	- 7%
Cross Flow in Lower Plenum	high estimate of resistance	0	- 3%
Ice Condenser Flow Area	+ 10%	0	- 3%
Ice Condenser Flow Area	- 10%	0	+ 4%
Ice Condenser Flow Area	+ 20%	0	- 6%
Ice Condenser Flow Area	- 20%	0	+ 8%
Initial Pressure in Containment	+ 0.3 psi	+ 2%	+ 2%
Initial Pressure in Containment	- 0.3 psi	- 2%	- 2%

All values shown are to the nearest percent.

TABLE 6.2.1-6

ICE CONDENSER PARAMETERS USED IN
COMPRESSION PEAK PRESSURE ANALYSIS

Upper Compartment, ft^3	651,000 *
Ice Condenser, ft^3	
Lower Plenum	24,200
Ice Bed	86,320
Upper Plenum	47,000
Lower Compartment (active), ft^3	248,500
Total Active Volume, ft^3	1,057,020
Lower Compartment (dead ended), ft^3	129,900
Total Containment Volume, ft^3	1,186,920
Reactor Containment Air Compression Ratio	1.374
Reactor Power, MWt	3,491.5
Design Energy Release to Containment	
Initial Blowdown Mass Release, lb.	547,023
Initial Blowdown Energy Release, BTU	309.1 (10^6)
Ice Condenser Parameters	
Weight of Ice in Condenser, lb.	1.79 (10^6)

* All volumes are not free volumes.

TABLE 6.2.1-7

CONTAINMENT PRESSURE CALCULATION
ECCS SWITCHOVER PUMP FLOW VS. TIME
(LOSS OF OFF-SITE POWER AT EVENT INITIATION)

Time After Safeguards Initiation (Sec)	ECCS To Core (RWST) (Gpm)	Flow Spray (Flow) (Gpm)	RHR Spray (Flow) (Gpm)	ECCS Flow To Core (Sump) (Gpm)	Comments
0	0	0	0	0	"S' - Signal
21.9	0	0	0	0	
22.0	1022	0	0	0	CCP/SIP Start
26.9	1022	0	0	0	
27.0	*4810	0	0	0	RHR/CP/SIP ECCs Flow
249.9	4810	0	0	0	
250.0	4810	4750	0	0	Containment Spray Start
1690.0	4810	4750	0	0	
1691.0	1022	4750	0	3299	RHR Switchover
1710.9	1022	4750	0	3299	
1711.0	0	4750	0	3299	CCP/SIP Switchover
2802.9	0	4750	0	3299	
2803.0	0	0	0	3299	CS Pump Stopped
3112.9	0	0	0	3299	
3113.0	0	4750 (Sump)	0	3299	CS Pump Switchover
3600.0	0	4750 (Sump)	0	3299	
3600.1	0	4750 (Sump)	1277	1060	RHR Alignment for Auxiliary CS
End of Transient	0	4750 (Sump)	1277	1060	

*4810 gpm Total Flow (RWST)
421.5 gpm - 1 Centrifugal Charging Pump
600.7 gpm - 1 Safety Injection Pump
3787.8 gpm - 1 RHR Pump

TABLE 6.2.1-8
NORMALIZED DECAY HEAT*

Time (sec)	Decay Heat (BTU/BTU)
10	0.052293
15	0.049034
20	0.047562
40	0.041504
60	0.038493
80	0.036410
100	0.034842
150	0.032180
200	0.030432
400	0.026664
600	0.024486
800	0.022943
1000	0.021722
1500	0.019483
2000	0.017903
4000	0.014386
6000	0.012684
8000	0.011645
10000	0.010916
15000	0.010130
20000	0.009368
40000	0.007784
60000	0.006976
80000	0.006439
100000	0.006034
150000	0.005336
200000	0.004859
400000	0.003781
600000	0.003212
800000	0.002844
1000000	0.002589
1500000	0.002175
2000000	0.001915
4000000	0.001356
6000000	0.001090
8000000	0.000924
10000000	0.000804

Key Assumptions

-18 month fuel cycle
-Standard and V5H fuel
-End of Cycle Core Average Burnup of 52,687 Mwd/MTU
-Low bound for enrichment: 3.0%

* Total decay heat found by multiplying the fractions from above by the reactor power.

SQN-18

TABLE 6.2.1-9

ENERGY ACCOUNTING

	Approx† End of Blowdown (t = 10.0 Seconds)	Approx†† End of Reflood (t = 216.0 Seconds)
	(In Millions of Btus)	
Ice Heat Removal	195.86	244.4
Structural Heat Sinks*	18.05	61.74
RHR Heat Exchanger Heat Removal*	0.00	0.00
Spray Heat Exchanger Heat Removal*	0.00	0.00
Energy Content of Sump	183.7	235.6
Ice Melted (Pounds)(10^6)	0.632	0.8266

*Integrated Energies

† End of Blowdown is redefined in LOTIC-1 to occur at 10 seconds, per results from the Waltz Mil Ice condenser test.

†† The approximate time is the time closest to the event that is captured in the LOTIC-1 code major print out. Table 6.2.1-21 provides the actual sequence of events

SQN-18

TABLE 6.2.1-10

ENERGY ACCOUNTING

	Approximate† Time of Ice Melt Out (t=3363 Seconds)	Approximate† Time of Peak Pressure (t=6983 Seconds)
	(In Millions of Btus)	
Ice Heat Removal	516.45	516.45
Structural Heat Sinks*	79.795	121.440
RHR Heat Exchanger Heat Removal*	16.085	45.919
Spray Heat Exchanger Heat Removal*	4.165	69.33
Energy Content of Sump	623.99	651.71
Ice Melted (Pounds)(10^6)	1.916	1.916

*Integrated Energies

† - The approximate time is the time closest to the event that is captured in the LOTIC-1 code major printout. Table 6.2.1-21 provides the actual sequence of events.

TABLE 6.2.1-12

ALLOWABLE LEAKAGE AREA FOR VARIOUS
REACTOR COOLANT SYSTEM BREAK SIZES

Break Size	5 ft^2 Deck Leak Air Compression Peak (psig)	Deck Leakage Area (ft^2)	Resultant Peak Containment Pressure (psig)
Double-ended	7.8	54	12.0
0.6 Double-ended	6.6	40	12.0
3 ft^2	6.25	46	12.0
10 inch diameter	5.75	38	12.0
10 inch diameter*	5.75	50	10.7*
6 inch diameter	5.5	41	12.0
6 inch diameter*	5.5	50	10.0*
2 inch diameter	5.0	50	5.0
2 inch diameter*	4.0	50	4.2*
1/2 inch diameter	3.0	>50	3.0

* This case assumes upper compartment structural heat sink steam condensation of 6 lb/sec and 30 percent of deck leakage is air.

Note: One spray at 4750 gpm at 100°F was assumed for all breaks smaller than the 3 ft^2 break.

TABLE 6.2.1-13

DOUBLE-ENDED PUMP SUCTION GUILLOTINE
BLOWDOWN MASS AND ENERGY RELEASES

TIME	BREAK PATH NO. 1 FLOW		BREAK PATH NO. 2 FLOW	
		THOUSAND		THOUSAND
SECONDS	LBM/SEC	BTU/SEC	LBM/SEC	BTU/SEC
.000	.0	.0	.0	.0
.100	40652.3	22155.5	21305.4	11589.8
.300	44913.9	24637.7	23255.3	12671.0
.500	45662.7	25421.3	21735.4	11862.1
.901	43941.2	25431.4	18780.1	10260.7
1.30	39865.3	24065.2	17981.7	9830.1
1.70	33580.8	21305.0	17844.4	9753.1
2.30	26469.4	17686.8	17455.7	9529.1
2.50	21202.7	14364.1	17153.4	9358.2
3.10	17483.2	12106.9	15751.3	8575.3
4.00	14400.1	9943.1	14154.3	7688.0
4.80	14561.0	9784.1	12829.8	6960.9
5.20	10803.2	8250.7	12320.6	6682.7
5.40	10576.5	8027.4	12099.6	6562.5
5.80	12028.9	8539.9	12883.7	6989.3
6.40	16798.1	10844.8	12678.5	6882.4
6.80	24411.2	15173.7	12399.0	6700.6
7.40	27252.6	16402.6	11535.6	6266.4
8.40	27794.5	16485.8	10378.6	5638.3
9.20	27093.2	16102.4	9506.0	5161.8
10.0	25303.0	15075.4	8720.1	4734.0
10.2	12469.4	7437.0	9168.7	4985.9
10.4	9375.5	5800.2	8805.7	4781.8
11.0	7501.7	4906.4	9210.6	5013.3
12.6	7580.7	4823.4	8914.2	4879.6
13.2	8691.7	5616.6	8849.2	4879.3
13.6	5747.2	4750.1	8657.3	4780.1
14.8	7576.4	4781.3	7932.9	4409.3
15.6	6502.2	4198.1	6906.1	3958.1
16.0	6175.3	4171.9	7957.7	4576.8
16.4	5667.4	3945.4	6571.9	3753.3
17.2	5209.0	3694.0	6436.9	3775.6
18.4	4391.4	3527.5	5210.7	3312.9
19.4	2870.0	3156.9	4642.9	2704.3
19.8	2406.2	2870.9	3845.9	2176.1
20.4	1914.0	2362.0	4624.5	2051.6
21.6	1176.5	1470.0	4758.3	1805.5
22.4	850.2	1067.6	1557.8	568.1
23.0	623.9	785.9	3228.9	882.2
25.4	206.2	262.0	1130.4	273.0
25.8	172.7	219.7	1666.9	387.5
26.0	155.6	198.0	.0	.0
27.6	83.1	106.3	.0	.0
27.8	72.2	92.4	1564.6	364.9
28.0	74.6	95.5	.0	.0
28.6	94.6	120.9	940.1	227.7
28.8	88.1	112.7	.0	.0
29.6	52.0	66.8	.0	.0
30.0	27.8	35.8	.0	.0
32.5	.0	.0	.0	.0

TABLE 6.2.1-15

DOUBLE-ENDED PUMP SUCTION GUILLOTINE
REFLOOD MASS AND ENERGY RELEASES - MINIMUM SI

TIME	BREAK PATH NO. 1 FLOW		BREAK PATH NO. 2 FLOW	
(SECONDS)	LBM/SEC	THOUSAND BTU/SEC	LBM/SEC	THOUSAND BTU/SEC
32.5	.0	.0	.0	.0
33.0	.0	.0	161.5	11.8
33.4	.0	.0	161.5	11.8
33.5	34.0	39.8	161.5	11.8
33.7	16.6	19.4	161.5	11.8
34.6	58.4	68.2	161.5	11.8
36.6	108.1	126.5	161.5	11.8
37.6	126.7	148.3	161.5	11.8
38.6	348.2	410.1	4042.8	567.7
39.5	357.9	421.8	4128.5	595.1
40.6	352.8	415.7	4076.0	589.7
41.6	347.5	409.5	4021.0	583.4
43.6	337.0	396.9	3907.9	569.9
45.6	326.9	384.9	3797.7	556.4
47.6	317.4	373.6	3692.9	543.5
49.6	308.6	363.2	3594.0	531.3
51.6	300.4	353.4	3500.8	519.8
53.6	292.8	344.4	3412.9	508.9
55.6	285.7	335.9	3330.0	498.6
57.6	279.0	328.0	3251.7	488.9
59.6	272.8	320.6	3177.5	479.7
61.6	266.9	313.7	3107.2	471.0
63.6	261.4	307.1	3040.3	462.7
67.6	251.2	295.0	2915.8	447.2
71.6	242.1	284.2	2802.1	433.0
75.6	233.7	274.3	2697.7	419.9
79.6	226.1	265.4	2601.2	407.8
83.6	219.1	257.1	2511.7	396.5
84.6	368.5	434.3	293.4	180.3
85.6	380.3	448.4	297.9	187.0
86.6	373.8	440.7	295.2	183.3
90.7	345.0	406.3	283.5	167.1
105.6	280.8	330.1	258.1	132.6
109.6	270.5	317.8	254.1	127.2
113.6	262.0	307.7	250.8	122.9
117.6	255.1	299.6	248.2	119.3
129.6	241.9	283.9	243.1	112.5
143.6	234.6	275.3	240.3	108.8
151.6	233.2	273.6	239.8	107.9
157.6	235.4	276.1	243.1	109.0
165.6	238.9	280.3	251.7	110.7
173.6	240.8	282.5	261.3	111.8
181.6	240.8	282.5	271.5	112.3
183.6	240.5	282.2	274.2	112.3
191.6	238.5	279.8	285.3	112.1
197.6	236.0	276.8	294.3	111.7
205.6	231.1	271.0	306.6	110.9
207.6	229.6	269.2	309.7	110.6
215.6	222.8	261.2	322.7	109.5
216.0	222.4	260.8	323.4	109.4

SQN

TABLE 6.2.1-16

DOUBLE-ENDED PUMP SUCTION GUILLOTINE
MINIMUM SAFETY INJECTION
PRINCIPAL PARAMETERS DURING REFLOOD

TIME	FLOODING TEMP	FLOODING RATE	CARRYOVER FRACTION	CORE HEIGHT	DOWNCOMER HEIGHT	FLOW FRACTION	INJECTION TOTAL	INJECTION ACCUMULATOR	INJECTION SPILL	ENTHALPY
SECONDS	DEGREE F	IN/SEC		FT	FT		(POUNDS MASS PER SECOND)			BTU/ LBM
32.5	188.9	.000	.000	.00	.00	.250	.0	.0	.0	.00
33.2	187.0	23.831	.000	.61	1.35	.000	6543. 9	5897 .9	.0	87.90
33 4	185.9	26.676	.000	1.04	1.31	.000	6507. 5	5861 .4	.0	87.89
33.7	185.4	2.723	.089	1.29	1.90	.257	6434. 3	5788 .2	.0	87.87
33.9	185.4	2.826	.127	1.33	2.56	.302	6403. 9	5757 .8	.0	87.87
34.9	185.6	2.356	.310	1.50	5.93	.361	6230. 4	5584 .3	.0	87.82
35.6	185.8	2.283	.400	1.59	8.22	.372	6118. 2	5472 .1	.0	87.79
38.6	186.7	3.974	.602	1.90	16.06	.574	5019. 1	4414 .9	.0	87.54
39.5	186.9	3.816	.639	2.01	16.07	.572	4652. 9	4252 .2	.0	87.49
40.6	187.2	3.613	.667	2.13	16.07	.571	4746. 2	4144 .2	.0	87.44
45.0	189.1	3.190	.715	2.50	16.07	.565	4399. 5	3791 .4	.0	87.25
52.4	193.2	2.840	.740	3.00	16.07	.553	3956. 7	3340 .5	.0	86.96
61.2	198.9	2.583	.751	3.50	16.07	.541	3557. 9	2935 .4	.0	86.64
71.0	205.4	2.379	.757	4.00	16.07	.528	3212. 8	2585 .2	.0	86.31
82.6	212.1	2.197	.762	4.53	16.07	.516	2890. 2	2258 .1	.0	85.92
83.6	212.6	2.183	.762	4.57	16.07	.515	2865. 6	2233 .2	.0	85.89
84.6	213.2	3.150	.761	4.63	16.00	.608	597. 1	.0	.0	73.03
85.6	213.8	3.208	.761	4.69	15.84	.609	592. 2	.0	.0	73.03
90.7	216.7	2.925	.763	5.00	15.18	.605	602. 3	.0	.0	73.03
101.6	221.8	2.519	.766	5.58	14.41	.595	615. 9	.0	.0	73.03
110.6	225.3	2.321	.768	6.00	14.19	.589	621. 4	.0	.0	73.03
123.6	229.5	2.156	.771	6.56	14.26	.583	625. 9	.0	.0	73.03
134.6	232.6	2.082	.773	7.00	14.52	.580	628. 0	.0	.0	73.03
147.6	235.7	2.036	.776	7.50	14.95	.579	629. 4	.0	.0	73.03
151.6	236.5	2.031	.777	7.66	15.10	.579	629. 7	.0	.0	73.03
160.8	238.4	2.046	.779	8.00	15.42	.582	629. 3	.0	.0	73.03
169.6	240.0	2.054	.780	8.33	15.65	.587	628. 9	.0	.0	73.03
175.6	241.0	2.050	.781	8.56	15.77	.589	628. 9	.0	.0	73.03
187.5	242.8	2.020	.783	9.00	15.93	.594	629. 4	.0	.0	73.03
201.6	244.3	1.952	.784	9.51	16.03	.598	630. 9	.0	.0	73.03
216.0	244.0	1.853	.784	10.00	16.06	.599	633.3	.0	.0	73.03

TABLE 6.2.1-18

DOUBLE-ENDED PUMP SUCTION GUILLOTINE
MINIMUM SAFETY INJECTION
POST REFLOOD MASS AND ENERGY RELEASES

TIME	BREAK PATH NO. 1 FLOW		BREAK PATH NO. 2 FLOW	
(SECONDS)	LBM/SEC	THOUSAND BTU/SEC	LBM/SEC	THOUSAND BTU/SEC
216.1	214.1	263.6	449.8	117.7
221.1	213.8	263.2	450.1	117.6
226.1	213.5	262.9	450.4	117.6
231.1	212.4	261.5	451.5	117.7
236.1	212.0	261.0	451.8	117.6
256.1	210.4	259.1	453.4	117.4
261.1	210.0	258.5	453.9	117.4
271.1	208.9	257.2	454.9	117.3
281.1	207.8	255.8	456.1	117.3
286.1	207.9	255.9	456.0	117.1
296.1	206.5	254.3	457.3	117.1
301.1	206.5	254.2	457.4	117.0
306.1	205.7	253.2	458.2	117.0
311.1	205.6	253.1	458.3	116.9
316.1	204.7	252.0	459.2	117.0
321.1	204.4	251.7	459.4	116.9
326.1	203.4	250.5	460.4	116.9
336.1	202.6	249.5	461.2	116.8
346.1	201.5	248.1	462.3	116.8
351.1	201.5	248.1	462.4	116.6
356.1	200.7	247.1	463.2	116.7
361.1	200.4	246.8	463.4	116.6
366.1	199.4	245.6	464.4	116.7
371.1	198.9	244.9	464.9	116.6
376.1	198.9	244.9	465.0	116.5
381.1	198.1	243.9	465.8	116.5
386.1	197.6	243.3	466.2	116.5
391.1	197.0	242.6	466.8	116.5
396.1	196.7	242.2	467.2	116.4
401.1	196.1	241.4	467.7	116.4
406.1	195.3	240.5	468.5	116.4
411.1	194.7	239.7	469.2	116.4
416.1	194.5	239.5	469.3	116.3
421.1	193.8	238.6	470.0	116.3
431.1	192.7	237.2	471.2	116.3
436.1	192.4	236.9	471.4	116.2
446.1	191.2	235.4	472.6	116.2
451.1	190.7	234.8	473.1	116.1
456.1	86.1	105.9	577.8	138.2
711.3	86.1	105.9	577.8	138.2
711.4	79.8	93.0	584.0	121.9
716.1	79.7	98.0	584.2	136.8
1690.9	79.7	98.0	584.2	136.8
1691.0	65.1	80.1	387.0	125.6
1697.2	65.2	80.2	387.0	125.6

SQN-18

TABLE 6.2.1-21

DOUBLE ENDED PUMP SUCTION LOCA

MINIMUM SAFEGUARDS

Event	Time (Sec)
Rupture	0.0
Accumulator Flow Starts	15.0
End of Blowdown	32.5
Assumed Initiation of ECCS	32.5
Accumulators Empty	83.6
End of Reflood	216.
Assumed Initiation of Spray System	250.
Low Level Alarm from Refueling Water Storage Tank	1681.
Start of ECCS Cold Leg Recirculation	1691.
Low-Low Level Alarm from RWST - Sprays Stopped	2803.
Spray Pumps Restart in Recirculation Mode	3113.
Ice Bed Meltout	3367.
RHR Spray Realignment	3600.
Peak Containment Pressure	7068.

TABLE 6.2.1-22

DOUBLE-ENDED PUMP SUCTION GUILLOTINE
MINIMUM SAFETY INJECTION

MASS BALANCE

	TIME (SECONDS)	.00	32.52	32.52	216.02	711.35	1697.19
				MASS (THOUSAND LBM)			
INITIAL	IN RCS AND ACC	809.59	809.59	809.59	809.59	809.59	809.59
ADDED MASS	PUMPED INJECTION	.00	.00	.00	114.53	443.31	1096.45
	TOTAL ADDED	.00	.00	.00	114.53	443.31	1096.45
*** TOTAL AVAILABLE ***		809.59	809.59	809.59	924.12	1252.90	1906.04
DISTRIBUTION	REACTOR COOLANT	536.70	92.70	92.78	148.21	148.21	148.21
	ACCUMULATOR	272.89	169.85	169.76	.00	.00	.00
	TOTAL CONTENTS	809.59	262.54	262.54	148.21	148.21	148.21
EFFLUENT	BREAK FLOW	.00	547.02	547.02	775.89	1104.67	1757.80
	ECCS SPILL	.00	.00	.00	.00	.00	.00
	TOTAL EFFLUENT	.00	547.02	547.02	775.89	1104.67	1757.80
*** TOTAL ACCOUNTABLE ***		809.59	809.57	809.57	924.10	1252.87	1906.00

TABLE 6.2.1-23

DOUBLE-ENDED PUMP SUCTION GUILLOTINE
MINIMUM SAFETY INJECTION ENERGY BALANCE

	TIME (SECONDS)	.00	32.52	32.52	216.02	711.35	1697.19
		ENERGY (MILLION BTU)					
INITIAL ENERGY	IN RCS, ACC, S GEN	819.53	819.53	819.53	819.53	819.53	819.53
ADDED ENERGY	PUMPED INJECTION	.00	.00	.00	8.36	32.37	80.15
	DECAY HEAT	.00	9.75	9.75	30.59	73.62	141.70
	HEAT FROM SECONDARY	.00	-4.86	-4.86	-4.86	1.35	12.41
	TOTAL ADDED	.00	4.90	4.90	34.10	107.34	234.26
*** TOTAL AVAILABLE ***		819.53	824.43	824.43	853.63	926.87	1053.79
DISTRIBUTION	REACTOR COOLANT	309.28	15.04	15.05	31.65	31.65	31.65
	ACCUMULATOR	24.43	15.21	15.20	.00	.00	.00
	CORE STORED	23.53	12.59	12.59	3.92	3.62	3.52
	PRIMARY METAL	155.21	145.35	145.35	118.31	76.14	56.14
	SECONDARY METAL	46.53	45.95	45.95	40.75	31.30	20.49
	STEAM GENERATOR	260.55	261.61	261.61	228.75	178.03	125.02
	TOTAL CONTENTS	819.53	495.75	495.75	423.39	320.74	236.83
EFFLUENT	BREAK FLOW	.00	328.10	328.10	420.84	596.74	801.94
	ECCS SPILL	.00	.00	.00	.00	.00	.00
	TOTAL EFFLUENT	.00	328.10	328.10	420.84	596.74	801.94
*** TOTAL ACCOUNTABLE ***		819.53	823.84	823.84	844.23	917.47	1038.77

TABLE 6.2.1-24

STEAMLINE MASS AND ENERGY RELEASE RATES FOR
STEAM GENERATOR ENCLOSURE - MODEL 57AG/57AG STEAM GENERATOR

Time (sec)	Mass Flow x 10^4 (lbm/sec)	Energy x 10^7 (Btu/sec)
0.0	1.3100	1.5618
1.0	1.3100	1.5618
1.1	2.0451	1.7995
1.9	2.0451	1.7995
2.5	2.1969	1.7345
3.4	3.2916	2.1010
4.4	3.7622	2.2502
5.9	3.9237	2.2979
10.9	3.8238	2.2687
13.9	3.5492	2.1842
17.9	3.0607	2.0254

TABLE 6.2.1-25

STEAM GENERATOR ENCLOSURE GEOMETRY

Nodes	Volume (ft^3)
51,61	2654
52,62	1056
53,63	794
54,64	605
55,65	884
56,66	1089
57,67	801
58,68	608
59,69	893
60,70	3023

TABLE 6.2.1-26 (Sheet 1)

STEAM GENERATOR
TMD FLOWPATH INPUT

	FLOWPATH	F	K	EL	DHY	Amin	ELEQ	at/A
51 H	51 to 61	.02	.85	7.5	8.8	178.	4.4	.67
51 R	51 to 52	.02	.23	10.1	4.9	71.6	7.7	.37
51 A	51 to 53	.02	.23	9.4	9.2	53.8	7.7	.28
60 H	51 to 60	.02	-	9.4	12.1	264.	6.1	.83
52 R	52 to 53	.02	1.05	10.4	7.0	51.6	5.7	.49
52 A	52 to 55	.02	1.04	8.0	4.0	29.5	4.3	.27
52 H	52 to 56	.02	-	14.8	4.9	71.6	14.8	1.0
52 R	53 to 54	.02	.30	10.6	6.0	44.2	8.7	.69
53 H	53 to 57	.02	-	14.8	9.2	53.8	14.8	1.0
54 R	54 to 55	.02	.45	9.0	6.0	44.2	6.6	.63
54 H	54 to 58	.02	-	14.8	5.9	41.0	14.8	1.0
55 H	55 to 59	.02	-	14.8	7.2	59.9	14.8	1.0
56 R	56 to 57	.02	1.05	10.7	7.8	48.2	6.0	.52
56 A	56 to 59	.02	1.04	8.6	4.8	29.8	4.5	.31
56 H	56 to 2	.02	.80	6.9	3.0	55.2	4.7	.77
57 R	57 to 58	.02	.30	10.8	6.8	42.0	8.9	.72
57 H	57 to 2	.02	.90	6.4	6.8	34.4	4.4	.64
58 R	58 to 59	.02	.45	9.2	6.8	42.0	6.8	.66
58 H	58 to 1	.02	.90	6.4	4.0	25.8	4.1	.63
59 H	59 to 1	.02	.60	8.0	5.0	51.3	6.7	.89
60 R	60 to 54	.02	.23	8.9	5.9	41.0	7.5	.20
60 A	60 to 55	.02	.23	9.6	7.2	59.9	7.6	.29
61 R	61 to 62	.02	.23	10.1	4.9	71.6	7.7	.37

TABLE 6.2.1-26 (Sheet 2)

STEAM GENERATOR
TMD FLOWPATH INPUT

	FLOWPATH	F	K	EL	DHY	Amin	ELEQ	at/A
61 A	61 to 63	.02	.23	9.4	9.2	53.8	7.7	.28
70 H	61 to 70	.02	-	9.4	12.1	264.	6.1	.83
62 R	62 to 63	.02	1.05	10.4	7.0	51.6	5.7	.49
62 A	62 to 65	.02	1.04	8.0	4.0	29.5	4.3	.27
62 H	62 to 66	.02	-	14.8	4.9	71.6	14.8	1.0
63 R	63 to 64	.02	.30	10.6	6.0	44.2	8.7	.69
63 H	63 to 67	.02	-	14.8	9.2	53.8	14.8	1.0
64 R	64 to 65	.02	.45	9.0	6.0	44.2	6.6	.63
64 H	64 to 68	.02	-	14.8	5.9	41.0	14.8	1.0
65 H	65 to 69	.02	-	14.8	7.2	59.9	14.8	1.0
66 R	66 to 67	.02	1.05	10.7	7.8	48.2	6.0	.52
66 A	66 to 69	.02	1.04	8.6	4.8	29.8	4.5	.31
66 H	66 to 2	.02	.80	6.9	3.0	55.2	4.7	.77
67 R	67 to 68	.02	.30	10.8	6.8	42.0	8.9	.72
67 H	67 to 2	.02	.90	6.4	6.8	34.4	4.4	.64
68 R	68 to 69	.02	.45	9.2	6.8	42.0	6.8	.66
68 H	68 to 3	.02	.90	6.4	4.0	25.8	4.1	.63
69 H	69 to 3	.02	.60	8.0	5.0	51.3	6.7	.89
70 R	70 to 64	.02	.23	8.9	5.9	41.0	7.5	.20
70 A	70 to 65	.02	.23	9.6	7.2	59.9	7.6	.29

TABLE 6.2.1-27

PEAK DIFFERENTIAL PRESSURE - STEAM GENERATOR ENCLOSURE
WITH MODEL 57AG/57AG+ STEAM GENERATORS INSTALLED

Nodes	Differential Pressure (Psi)	Time (sec)
51-UPPER COMPARTMENT	19.52	6.029
52-UPPER COMPARTMENT	18.54	6.031
53-UPPER COMPARTMENT	18.54	6.030
54-UPPER COMPARTMENT	18.54	6.031
55-UPPER COMPARTMENT	18.53	6.031
56-UPPER COMPARTMENT	18.34	6.043
57-UPPER COMPARTMENT	18.40	6.040
58-UPPER COMPARTMENT	18.38	6.033
59-UPPER COMPARTMENT	18.34	6.033
60-UPPER COMPARTMENT	19.52	6.030

TABLE 6.2.1-28 (Sheet 1)

MASS AND ENERGY RELEASE RATES - 100 SQUARE INCH COLD LEG BREAK

TIME (S)	MASS FLOW (LP/S)	ENERGY FLOW (BTU/S)	AVG ENTHALPY (BTU/LB)
.00000	0.	0.	0.00
.00250	1.0833561E + 04	6.0882944E + 06	561.98
.00501	1.3332074E + 04	7.4944481E + 06	562.14
.00750	1.4861492E + 04	8.3559205E + 06	562.25
.01002	1.6038432E + 04	9.0154336E + 06	562.11
.01251	1.6517024E + 04	9.2790717E + 06	561.79
.01504	1.6248138E + 04	9.1176939E + 06	561.15
.01751	1.7929706E + 04	1.0070657E + 07	561.67
.02002	1.7971647E + 04	1.0085026E + 07	561.16
.02256	1.7386384E + 04	9.7435750E + 06	560.41
.02504	1.7161875E + 04	9.6105875E + 06	560.00
.02755	1.7425458E + 04	9.7560770E + 06	559.87
.03004	1.7533616E + 04	9.8133003E + 06	559.68
.03260	1.7820906E + 04	9.9734972E + 06	559.65
.03504	1.8104019E + 04	1.0131846E + 07	559.65
.03758	1.8372488E + 04	1.0282075E + 07	559.65
.04011	1.8594184E + 04	1.0405824E + 07	559.63
.04258	1.8721148E + 04	1.0475475E + 07	559.55
.04506	1.8669792E + 04	1.0443071E + 07	559.36
.04765	1.8504455E + 04	1.0345631E + 07	559.09
.05010	1.8377333E + 04	1.0270774E + 07	558.88
.05255	1.8297012E + 04	1.0223101E + 07	558.73
.05509	1.8268403E + 04	1.0205310E + 07	558.63
.05761	1.8250233E + 04	1.0193631E + 07	558.55
.06008	1.8162539E + 04	1.0142354E + 07	558.42
.06250	1.7968346E + 04	1.0030507E + 07	558.23
.06513	1.7701108E + 04	9.8772635E + 06	558.00
.06758	1.7530266E + 04	9.7794439E + 06	557.86
.07010	1.7544015E + 04	9.7870890E + 06	557.86
.07264	1.7711405E + 04	9.8823416E + 06	557.96
.07511	1.7890549E + 04	9.9842153E + 06	558.87
.07752	1.7959266E + 04	1.0022943E + 07	558.09
.08005	1.7884356E + 04	9.9796460E + 06	558.01
.08256	1.7691650E + 04	9.8692473E + 06	557.85
.08509	1.7403616E + 04	9.7048782E + 06	557.64
.08754	1.7098634E + 04	9.5312327E + 06	557.43
.09005	1.6796923E + 04	9.3596541E + 06	557.22
.09260	1.6562417E + 04	9.2264586E + 06	557.05
.09506	1.6422097E + 04	9.1469223E + 06	556.99
.09760	1.6376681E + 04	9.1213439E + 06	556.97
.10011	1.6415470E + 04	9.1442942E + 06	557.02
.11503	1.6902391E + 04	9.4213522E + 06	557.40
.12002	1.7101177E + 04	9.5344900E + 06	557.53
.12502	1.7095732E + 04	9.5309466E + 06	557.50
.13006	1.6928195E + 04	9.4352198E + 06	557.37
.13502	1.6723732E + 04	9.3187272E + 06	557.22
.14011	1.6412418E + 04	9.1418545E + 06	557.01
.14500	1.6066145E + 04	8.9454634E + 06	556.79

TABLE 6.2.1-28 (Sheet 2)

MASS AND ENERGY RELEASE RATES - 100 SQUARE INCH COLD LEG BREAK

TIME (S)	MASS FLOW (LP/S)	ENERGY FLOW (BTU/S)	AVG ENTHALPY (BTU/LB)
.15003	1.5809354E + 04	8.8002178E + 06	556.65
.15506	1.5674897E + 04	8.7243793E + 06	556.58
.16013	1.5551109E + 04	8.6546290E + 06	556.53
.16507	1.5434626E + 04	8.5890520E + 06	556.48
.17000	1.5380382E + 04	8.5587432E + 06	556.47
.17501	1.5387706E + 04	8.5633153E + 06	556.50
.18017	1.5415913E + 04	8.5796236E + 06	556.54
.18519	1.5441349E + 04	8.5942560E + 06	556.57
.19002	1.5464965E + 04	8.6077998E + 06	556.60
.19510	1.5475636E + 04	8.6139452E + 06	556.61
.20014	1.5433571E + 04	8.5901391E + 06	556.59
.21261	1.5197940E + 04	8.4569439E + 06	556.45
.22513	1.5278829E + 04	8.5032121E + 06	556.54
.23756	1.5419439E + 04	8.5828901E + 06	556.63
.25019	1.5607075E + 04	8.6891969E + 06	556.75
.26263	1.5460525E + 04	8.6057055E + 06	556.62
.27512	1.5172349E + 04	8.4425966E + 06	556.45
.28767	1.5258113E + 04	8.4915774E + 06	556.53
.30018	1.5484719E + 04	8.6200983E + 06	556.68
.31257	1.5718359E + 04	8.7520220E + 06	556.80
.32508	1.5284824E + 04	8.5058276E + 06	556.49
.33757	1.5161476E + 04	8.4362436E + 06	556.43
.35010	1.5312158E + 04	8.5218629E + 06	556.54
.36263	1.5360585E + 04	8.5491730E + 06	556.57
.37515	1.5340264E + 04	8.5374701E + 06	556.54
.38758	1.5400131E + 04	8.5712689E + 06	556.57
.40011	1.5524510E + 04	8.6415172E + 06	556.64
.41264	1.5487826E + 04	8.6204531E + 06	556.60
.42515	1.5307513E + 04	8.5180878E + 06	556.46
.43770	1.5189997E + 04	8.4516885E + 06	556.40
.45005	1.5315253E + 04	8.5228026E + 06	556.49
.46254	1.5424022E + 04	8.5842830E + 06	556.55
.47512	1.5349725E + 04	8.5419638E + 06	556.49
.48753	1.5317181E + 04	8.5235468E + 06	556.47
.50007	1.5430436E + 04	8.5877330E + 06	556.55
.52505	1.5438172E + 04	8.5917613E + 06	556.53
.55013	1.5358617E + 04	8.5467644E + 06	556.48
.57507	1.5544619E + 04	8.6521733E + 06	556.60
.66010	1.5461350E + 04	8.6046972E + 06	556.53
.62506	1.5476416E + 04	8.6134840E + 06	556.56
.65007	1.5439986E + 04	8.5928240E + 06	556.53
.67507	1.5466493E + 04	8.6080837E + 06	556.56
.70006	1.5559493E + 04	8.6607065E + 06	556.60
.72510	1.5535440E + 04	8.6470697E + 06	556.60
.75005	1.5507790E + 04	8.6314166E + 06	556.59
.77508	1.5568506E + 04	8.6660465E + 06	556.64
.80002	1.5540403E + 04	8.6501143E + 06	556.62
.82509	1.5550756E + 04	8.6561121E + 06	556.64

TABLE 6.2.1-28 (Sheet 3)

MASS AND ENERGY RELEASE RATES - 100 SQUARE INCH COLD LEG BREAK

TIME (S)	MASS FLOW (LP/S)	ENERGY FLOW (BTU/S)	AVG ENTHALPY (BTU/LB)
.85007	1.5576264E + 04	8.6706047E + 06	556.65
.87508	1.5586564E + 04	8.6764505E + 06	556.66
.90009	1.5595127E + 04	8.6813475E + 06	556.67
.92501	1.5588856E + 04	8.6778092E + 06	556.67
.95001	1.5598394E + 04	8.6832752E + 06	556.68
.97510	1.5622851E + 04	8.6972438E + 06	556.69
1.00008	1.5623376E + 04	8.6974385E + 06	556.69

TABLE 6.2.1-29 (Sheet 1)

REACTOR CAVITY
FLOW PATHS - COLD LEG BREAK

Between Compartments		K	F	Inertia Length (ft)	Hydraulic Diameter (ft)	Minimum Flow Area (ft)	Equivalent Length (For fl/D (ft)
1	3	0.5	0.02	1.3	2.4	9.3	0.8
1	54	1.35	0.02	4.2	3.4	14.0	4.5
1	53	0.5	0.02	6.9	0.5	2.0	6.8
2	22	2.9	0.02	28.0	5.8	36.0	19.0
3	34	1.0	0.02	0.5	5.5	7.2	0.5
4	35	0	0.02	3.5	0.4	0.6	3.5
4	45	0.6	0.02	1.6	0.5	0.7	1.5
4	47	1.1	0.02	1.5	0.5	0.7	1.5
5	36	0	0.02	3.3	0.4	2.4	3.3
5	46	0	0.02	5.9	0.4	0.7	5.9
6	37	0	0.02	3.3	0.4	2.4	3.3
6	2	3.7	0.02	6.0	0.4	0.7	6.0
6	5	0	0.02	12.0	0.4	0.7	12.0
7	9	1.0	0.02	5.6	0.4	2.5	4.9
7	38	2.0	0.02	8.3	0.4	1.3	7.1
7	47	2.8	0.02	3.5	0.4	1.4	2.9
8	10	0	0.02	6.6	0.4	2.4	6.6
8	2	3.7	0.02	.1	0.4	1.3	6.0
9	11	1.0	0.02	6.1	0.4	2.9	5.6
9	39	2.5	0.02	8.1	0.4	1.3	7.1
9	47	2.8	0.02	3.5	0.4	1.4	2.9
10	12	0	0.02	6.6	0.4	2.4	6.6
10	2	3.7	0.02	6.1	0.4	.3	6.0
11	13	.0	0.02	.6	0.4	2.5	4.9
11	40	2.0	0.02	8.1	0.4	1.3	7.1
11	47	2.8	0.02	3.5	0.4	1.4	2.9
12	14	0	0.02	6.6	0.4	2.4	6.6
12	2	3.7	0.02	6.1	0.4	1.3	6.0

TABLE 6.2.1-29 (Sheet 2)

REACTOR CAVITY
FLOW PATHS - COLD LEG BREAK

Between Compartments		K	F	Inertia Length (ft)	Hydraulic Diameter (ft)	Minimum Flow Area (ft)	Equivalent Length (For fl/D (ft)
13	15	1.0	0.02	6.0	0.4	2.5	5.6
13	41	2.5	0.02	8.3	0.4	1.3	7.1
13	47	2.8	0.02	3.9	0.4	1.4	2.9
14	16	0	0.02	6.6	0.4	2.4	6.6
14	2	3.7	0.02	6.1	0.4	1.3	6.0
15	17	1.0	0.02	5.6	0.4	2.5	4.9
15	42	2.0	0.02	8.3	0.4	1.3	7.1
15	47	2.8	0.02	3.9	0.4	1.4	2.9
16	18	0	0.02	6.6	0.4	2.4	6.6
16	2	3.7	0.02	6.1	0.4	1.3	6.0
17	19	1.0	0.02	6.1	0.4	2.9	5.6
17	43	2.5	0.02	8.1	0.4	1.3	7.1
17	47	2.8	0.02	3.5	0.4	1.4	2.9
18	20	0	0.02	6.6	0.4	2.4	6.6
18	2	3.7	0.02	6.1	0.4	1.3	6.0
19	4	1.0	0.02	4.5	0.4	0.6	3.8
19	44	2.5	0.02	8.1	0.4	1.3	7.1
19	47	2.8	0.02	3.5	0.4	1.4	2.9
20	6	0	0.02	6.6	0.4	2.4	6.6
20	2	3.7	0.02	6.1	0.4	1.3	6.0
21	22	2.0	0.02	38.0	40.4	1560.0	38.0
21	25	1.5	0.02	14.0	0.6	3.6	14.0
21	48	.7837	0.00	10.36	1.0	265.87	0.0
22	23	3.0	0.02	38.0	40.0	1560.0	38.0
22	26	1.5	0.02	6.1	0.4	2.4	5.9
22	48	.7837	0.00	10.36	1.0	265.87	0.0
23	24	2.0	0.02	38.0	40.0	1560.0	38.0
23	28	1.5	0.02	6.1	0.5	2.7	5.8

TABLE 6.2.1-29 (Sheet 3)

REACTOR CAVITY
FLOW PATHS - COLD LEG BREAK

Between Compartments		K	F	Inertia Length (ft)	Hydraulic Diameter (ft)	Minimum Flow Area (ft)	Equivalent Length (For fl/D (ft)
23	48	.7837	0.00	10.36	1.0	265.87	0.0
24	21	3.0	0.02	32.0	10.5	100.0	27.0
24	47	3.9	0.02	6.3	5.5	32.0	4.0
24	48	.7837	0.00	10.36	1.0	265.87	0.0
25	7	2.2	0.02	4.9	0.4	2.2	4.5
25	55	1.9	0.02	4.2	3.4	14.0	4.5
25	55	1.9	0.02	4.2	3.4	14.0	4.5
26	9	9.1	0.02	3.5	3.0	20.0	3.0
26	56	1.9	0.02	3.8	1.9	10.0	2.6
27	11	2.2	0.02	3.5	3.0	20.0	3.0
27	57	1.9	0.02	3.8	1.9	10.0	2.6
27	22	1.5	0.02	6.1	0.4	2.4	5.9
28	13	9.1	0.02	3.8	3.3	21.0	3.6
28	58	1.9	0.02	4.2	3.4	14.0	4.5
29	15	2.2	0.02	3.8	3.3	21.0	3.6
29	59	1.9	0.02	4.2	3.4	14.0	4.5
29	23	1.5	0.02	6.1	0.5	2.7	5.8
30	17	9.1	0.02	3.5	3.0	20.0	3.0
30	60	1.9	0.02	3.8	1.9	10.0	2.6
30	24	1.5	0.02	6.1	0.4	2.4	5.9
31	19	2.2	0.02	3.5	3.0	20.0	3.0
31	61	1.9	0.02	3.8	1.9	10.0	2.6
31	24	1.5	0.02	6.1	0.4	2.4	5.9
33	3	1.0	0.02	0.5	5.5	7.2	0.5
33	46	2.7	0.02	6.6	0.7	0.5	3.4
33	19	0.2	0.02	3.1	0.4	2.9	2.8
33	1	9.1	0.02	8.6	0.6	0.7	1.6
34	1	9.1	0.02	8.6	0.6	0.7	1.6

TABLE 6.2.1-29 (Sheet 4)

REACTOR CAVITY
FLOW PATHS - COLD LEG BREAK

Between Compartments		K	F	Inertia Length (ft)	Hydraulic Diameter (ft)	Minimum Flow Area (ft)	Equivalent Length (For fl/D (ft)
34	7	0.2	0.02	3.1	0.4	2.5	2.8
34	46	2.7	0.02	6.6	0.7	0.5	3.4
35	7	2.6	0.02	4.5	0.4	0.6	3.8
35	47	1.1	0.02	1.5	0.5	0.7	1.5
35	45	0.6	0.02	1.6	0.5	0.7	1.5
36	46	0	0.02	5.9	0.4	0.7	5.9
36	38	0	0.02	4.9	0.4	2.4	4.9
36	37	0	0.02	12.0	0.4	0.7	12.0
37	8	0	0.02	4.9	0.4	2.4	4.9
37	2	3.7	0.02	6.0	0.4	0.7	6.0
38	39	0	0.02	6.6	0.4	2.4	6.6
38	8	0	0.02	12.0	0.4	1.3	12.0
39	40	0	0.02	6.6	0.4	2.4	6.6
39	10	0	0.02	12.0	0.4	1.3	12.0
40	41	0	0.02	6.6	0.4	2.4	6.6
40	12	0	0.02	12.0	0.4	1.3	12.0
41	42	0	0.02	6.6	0.4	2.4	6.6
41	14	0	0.02	12.0	0.4	1.3	12.0
42	43	0	0.02	6.6	0.4	2.4	6.6
42	16	0	0.02	12.0	0.4	1.3	12.0
43	44	0	0.02	6.6	0.4	2.4	6.6
43	18	0	0.02	12.0	0.4	1.3	12.0
44	5	0	0.02	4.9	0.4	2.4	4.9
44	20	0	0.02	12.0	0.4	1.3	12.0
45	3	0.2	0.02	0.6	5.5	5.4	0.7
45	33	2.2	0.02	6.7	1.4	1.0	6.7
45	34	2.2	0.02	6.7	1.4	1.0	6.7
46	3	3.3	0.02	0.7	0.5	1.4	0.4

TABLE 6.2.1-29 (Sheet 5)

REACTOR CAVITY
FLOW PATHS - COLD LEG BREAK

Between Compartments		K	F	Inertia Length (ft)	Hydraulic Diameter (ft)	Minimum Flow Area (ft)	Equivalent Length (For fl/D (ft)
47	21	3.8	0.02	5.8	5.1	26.0	4.0
47	22	3.8	0.02	9.1	12.0	74.0	4.2
47	23	3.8	0.02	8.3	11.0	62.0	4.0
48	49	0.987	0.00	8.733	1.0	989.01	0.0
49	50	1.107	0.00	12.278	1.0	983.13	0.0
50	51	1.107	0.00	12.278	1.0	983.13	0.0
51	52	2.049	0.00	8.856	1.0	983.13	0.0
52	32	1.45	0.00	2.8	1.0	2003.1	0.0
53	21	1.0	0.02	6.8	0.5	2.0	6.8
54	47	1.35	0.02	4.2	3.4	14.0	4.5
55	47	1.9	0.02	4.2	3.4	14.0	4.5
56	47	1.9	0.02	3.8	1.9	10.0	2.6
57	47	1.9	0.02	3.8	1.9	10.0	2.6
58	47	1.9	0.02	4.2	3.4	14.0	4.5
59	47	1.9	0.02	4.2	3.4	14.0	4.5
60	47	1.9	0.02	3.8	1.9	10.0	2.6
61	47	1.9	0.02	3.8	1.9	10.0	2.6

TABLE 6.2.1-30 (Sheet 1)

REACTOR CAVITY
VOLUMES - COLD LEG BREAK

	LOCATION	VOLUME (FT^3)
1.	Break location pipe annulus	83.5
2.	Lower reactor cavity	12,000
3.	Reactor vessel annulus	7.7
4.	Reactor vessel annulus	2.1
5.	Reactor vessel annulus	8
6.	Reactor vessel annulus	8
7.	Reactor vessel annulus	14
8.	Reactor vessel annulus	16
9.	Reactor vessel annulus	17
10.	Reactor vessel annulus	16
11.	Reactor vessel annulus	17
12.	Reactor vessel annulus	16
13.	Reactor vessel annulus	14
14.	Reactor vessel annulus	16
15.	Reactor vessel annulus	14
16.	Reactor vessel annulus	16
17.	Reactor vessel annulus	17
18.	Reactor vessel annulus	16
19.	Reactor vessel annulus	17
20.	Reactor vessel annulus	16
21.	Lower containment	60,000
22.	Lower containment	60,000
23.	Lower containment	60,000
24.	Lower containment	60,000
25.	Pipe annulus	90
26.	Pipe annulus	96.9
27.	Pipe annulus	70.9
28.	Pipe annulus	104
29.	Pipe annulus	80
30.	Pipe annulus	96.9
31.	Pipe annulus	70.9
32.	Upper containment	651,000
33.	Reactor vessel annulus	12.9
34.	Reactor vessel annulus	12.9
35.	Reactor vessel annulus	2.1
36.	Reactor vessel annulus	8
37.	Reactor vessel annulus	8
38.	Reactor vessel annulus	16
39.	Reactor vessel annulus	16
40.	Reactor vessel annulus	16
41.	Reactor vessel annulus	16
42.	Reactor vessel annulus	16

TABLE 6.2.1-30 (Sheet 2)

REACTOR CAVITY
VOLUMES - COLD LEG BREAK

	LOCATION	VOLUME (FT^3)
43.	Reactor vessel annulus	16
44.	Reactor vessel annulus	16
45.	Reactor vessel annulus	11
46.	Reactor vessel annulus	6.5
47.	Upper reactor cavity	15,500
48.	Ice condenser	24,240
49.	Ice condenser	28,760
50.	Ice condenser	28,760
51.	Ice condenser	28,760
52.	Ice condenser	47,000
53.	Pipe chase	49
54.	Inspection port	56
55.	Inspection port	56
56.	Inspection port	51
57.	Inspection port	51
58.	Inspection port	56
59.	Inspection port	56
60.	Inspection port	51
61.	Inspection port	51

TABLE 6.2.1-31 (Sheet 1)

MASS AND ENERGY RELEASE FOR STEAMLINE RUPTURE

*CASE A: STEAMLINE BREAK WITH DIESEL GENERATOR FAILURE			CASE B: STEAMLINE BREAK WITH FEED ISOLATION VALVE FAILURE		
TIME (SEC)	MASS FLOW RATE (LBM/SEC)	ENERGY FLOW RATE (10^3 BTU/SEC)	TIME (SEC)	MASS FLOW RATE (LBM/SEC)	ENERGY FLOW RATE (10^3 BTU/SEC)
0.1	3404	4085	0.1	3404	4085
2.5	2932	3518	2.5	2932	3518
5	2472	2966	5	2472	2966
10	1992	2390	10	1992	2390
15	1762	2114	15	1762	2114
20	1642	1970	20	1642	1970
30	1572	1886	30	1572	1886
50	1532	1838	50	1532	1838
100	1532	1838	100	1532	1838
100.1	1360	1632	100.1	1360	1632
158	1360	1632	158	1360	1632
158.1	1040	1248	158.1	1040	1248
221	1040	1248	221	1040	1248
221.1	216	259	221.1	216	259
600	216	259	600	216	259
600.1	0	0	600.1	0	0

*Results of this case are the same as Case B due to the use in Case A of Mass and Energy sources in the Feedwater System which are equivalent to Case B.

TABLE 6.2.1-31 (Sheet 2)

MASS AND ENERGY RELEASE FOR STEAMLINE RUPTURE

*CASE A: STEAMLINE BREAK WITH DIESEL GENERATOR FAILURE			CASE B: STEAMLINE BREAK WITH FEED ISOLATION VALVE FAILURE		
TIME (SEC)	MASS FLOW RATE (LBM/SEC)	ENERGY FLOW RATE (10^3 BTU/SEC)	TIME (SEC)	MASS FLOW RATE (LBM/SEC)	ENERGY FLOW RATE (10^3 BTU/SEC)
0.1	3404	4085	0.1	13245	15894
2.5	2932	3518	2.5	11357	13628
5	2472	2966	5	9517	11420
10	1992	2390	10	7597	9116
15	1762	2114	15	1897	2276
20	1642	1970	20	1787	2144
30	1572	1886	30	1717	2060
50	1532	1838	50	1677	2012
100	1532	1838	100	1677	2012
100.1	1360	1632	100.1	1360	1632
177	1360	1632	158	1360	1632
177.1	1040	1248	158.1	1040	1248
186	1040	1248	221	1040	1248
186.1	216	259	221.1	216	259
600	216	259	600	216	259
600.1	0	0	600.1	0	0

TABLE 6.2.1-32 (Sheet 1)

SEQUOYAH STRUCTURAL HEAT SINKS

Passive Heat Sinks

A. Material Properties

Material	Thermal Conductivity BTU/hr-F-ft	Volumetric Heat Capacity BTU/ft^3-F
$Paint_1$	0.2000	14.0
$Paint_2$	0.0833	28.4
Concrete	0.8	28.8
Stainless Steel	9.4	56.35
Carbon Steel	26.0	56.35

B. Surfaces

Heat Sink		Material	Area (ft^2)	Layer and Thickness (ft)	
Upper Compartment					
1)	Operating Deck	Concrete	4,880	1.07	Concrete
2)	Crane Wall	Concrete	18,280	0.0005 1.29	Paint Concrete
3)	Refueling Canal Concrete	Steel-lined	3,840	0.0208 1.5	Stainless Steel Concrete
4)	Operating Deck	Concrete	760	0.00125 1.5	Paint Concrete

TABLE 6.2.1-32 (Sheet 2)

SEQUOYAH STRUCTURAL HEAT SINKS

Heat Sink	Material	Area (ft^2)	Layer and Thickness (ft)	
Upper Compartment (continued)				
5) Containment Shell & Misc. Steel	Steel	49,960	0.000625 0.0403	Paint Steel
6) Misc. Steel	Steel	2,260	0.000625 0.12	Paint Steel
Lower Compartment				
7) Operating Deck, Crane Wall & Interior Concrete	Concrete	32,200	1.416	Concrete
8) Area in Contact With Sump Water	Concrete	15,540	1.6	Concrete
9) Interior Concrete	Concrete	3,590	.0011 1.5	Paint Concrete
10) Reactor Cavity	Steel-Lined Concrete	2,270	0.02082 2.1	Stainless Steel Concrete

TABLE 6.2.1-32 (Sheet 3)

SEQUOYAH STRUCTURAL HEAT SINKS

Heat Sink	Material	Area (ft^2)	Layer and Thickness (ft)	
Lower Compartment (Continued)				
11) Containment Shell & Misc. Steel	Steel	19,500	0.000625 0.0495	Paint Steel
12) Misc. Steel	Steel	9,000	0.000625 0.1008	Paint Steel
Ice Condenser				
13) Ice Baskets	Steel	149,600	.00663	Steel
14) Lattice Frames	Steel	75,865	0.217	Steel
15) Lower Support Structure	Steel	28,670	0.0587	Steel
16) Ice Condenser Floor	Concrete	3,336	.000833 0.333	Paint Concrete
17) Containment Wall Panels & Containment Shell	Composite panel steel and insulation	19,100	1.0 0.4625	Steel & Insulation Steel sheet
18) Crane Wall Panels and Crane Wall	Composite panel steel and insulation	13,055	1.2 1.0	Steel & Insulation Concrete

TABLE 6.2.1-33

SEQUOYAH ICE CONDENSER DESIGN PARAMETERS
REACTOR CONTAINMENT VALUE (NET FREE VOLUME)
USED FOR CONTAINMENT TEMPERATURE ANALYSIS

Upper Compartment, ft^3	651,000
Ice Condenser, ft^3	
Lower Plenum	24,200
Ice Bed	86,300
Upper Plenum	47,000
Lower Compartment (active), ft^3	289,000
Total Active Volume, ft^3	1,097,590
Lower Compartment (dead ended), ft^3	94,000
Total Containment Volume, ft^3	1,191,500
Ice Condenser Parameters	
Weight of Ice in Condenser, lb.	$2.45\ 10^6$ *

* This ice mass is a historical value that was the current value when the analysis of record was completed. Moderate changes to the ice mass do not adversely affect the Containment Temperature Analysis as there is not enough energy on the secondary side to melt-out the ice bed and peak containment temperature resulting from a steamline break is primarily sensitive to enthalpy in the blow-down. (Reference 89)

TABLE 6.2.1-34

LARGE BREAK ANALYSIS - ASSOCIATED TIMES

Case	Maxium LC Temp. - °F	Time T_{max} (sec)
4.6 ft^2, 102% Power AFW Runout	291.08	2.66
4.6 ft^2, 102% Power FCV Failure	291.14	2.66
4.6 ft^2, 102% Power MSIV Failure	291.15	2.66
1.4 ft^2, 102% Power AFW Runout	292.09	3.11
1.4 ft^2, 102% Power FCV Failure	292.32	3.11
1.4 ft^2, 102% Power MSIV Failure	298.93	2.91
4.6 ft^2, 0% Power AFW Runout	290.44	2.61
4.6 ft^2, 0% Power FCV Failure	290.46	2.61
4.6 ft^2, 0% Power MSIV Failure	290.23	2.56
1.4 ft^2, 0% Power AFW Runout	288.39	3.06
1.4 ft^2, 0% Power FCV Failure	288.41	3.06
1.4 ft^2, 0% Power MSIV Failure	290.55	2.51

TABLE 6.2.1-35

SMALL BREAK - SMALL SPLIT - ASSOCIATED TIMES

Case	Maxium LC Temp. - °F	Time T_{max} (sec)
1.0 ft^2, 102% Power AFW Runout	325.23	77.77
.942 ft^2, 30% Power AFW Runout	324.57	78.67
.6 ft^2, 30% Power AFW Runout	325.51	123.23
.35 ft^2, 30% Power AFW Runout	325.48	194.76
.1 ft^2, 30% Power AFW Runout	319.44	638.58

TABLE 6.2.1-36

1.4 ft^2 Break, 100.7% Power
MSIV Failure

Time (sec.)	m (lb/sec)	e (BTU/sec)
.1000E-01	.1161E+05	.1389E+08
.1000E+01	.1149E+05	.1375E+08
.2000E+01	.1138E+05	.1362E+08
.2957E+01	.1128E+05	.1350E+08
.2958E+01	.9958E+04	.1192E+08
.3000E+01	.9940E+04	.1190E+08
.4000E+01	.9536E+04	.1142E+08
.5000E+01	.9188E+04	.1101E+08
.6000E+01	.8895E+04	.1067E+08
.7000E+01	.8635E+04	.1036E+08
.8000E+01	.8401E+04	.1009E+08
.9000E+01	.8189E+04	.9831E+07
.1000E+02	.7986E+04	.9595E+07
.1100E+02	.7782E+04	.9350E+07
.1200E+02	.7573E+04	.9103E+07
.1220E+02	.7532E+04	.9055E+07
.1230E+02	.1695E+04	.2039E+07
.1300E+02	.1652E+04	.1989E+07
.1400E+02	.1593E+04	.1918E+07
.1500E+02	.1537E+04	.1851E+07
.1750E+02	.1414E+04	.1702E+07
.2000E+02	.1313E+04	.1581E+07
.2260E+02	.1233E+04	.1485E+07
.2510E+02	.1161E+04	.1398E+07
.3010E+02	.1049E+04	.1263E+07
.3510E+02	.9690E+03	.1167E+07
.4010E+02	.9120E+03	.1097E+07
.5010E+02	.8370E+03	.1007E+07
.6010E+02	.7880E+03	.9472E+06
.7010E+02	.7510E+03	.9027E+06
.8010E+02	.2490E+03	.2990E+06
.1001E+03	.6650E+03	.7980E+06
.1201E+03	.6220E+03	.7464E+06
.1401E+03	.5880E+03	.7050E+06
.1601E+03	.5590E+03	.6697E+06
.1801E+03	.5340E+03	.6392E+06
.2001E+03	.5110E+03	.6117E+06
.3001E+03	.4220E+03	.5039E+06
.6001E+03	.1910E+03	.2252E+06

TABLE 6.2.1-37

0.35 FT^2 SPLIT, 30% POWER
AFW RUNOUT

Time (sec.)	m (lb/sec)	e (BTU/sec)
.1000E-01	.7186E+03	.8565E+06
.1000E+01	.7160E+03	.8536E+06
.1500E+01	.7160E+03	.8536E+06
.2500E+01	.7116E+03	.8485E+06
.3500E+01	.7096E+03	.8463E+06
.5500E+01	.7031E+03	.8387E+06
.6500E+01	.6996E+03	.8347E+06
.8500E+01	.6933E+03	.8274E+06
.9500E+01	.6910E+03	.8246E+06
.1150E+02	.6971E+03	.8317E+06
.1250E+02	.6982E+03	.8329E+06
.1450E+02	.7000E+03	.8350E+06
.1550E+02	.7001E+03	.8351E+06
.1950E+02	.7037E+03	.8394E+06
.2950E+02	.6233E+03	.7460E+06
.3850E+02	.5710E+03	.6846E+06
.4850E+02	.5184E+03	.6225E+06
.7750E+02	.4297E+03	.5171E+06
.1065E+03	.3825E+03	.4605E+06
.1355E+03	.3527E+03	.4247E+06
.1645E+03	.3316E+03	.3993E+06
.1935E+03	.3149E+03	.3792E+06
.2225E+03	.3012E+03	.3628E+06
.2515E+03	.2883E+03	.3472E+06
.2805E+03	.2756E+03	.3318E+06
.3185E+03	.2606E+03	.3137E+06
.3765E+03	.2403E+03	.2892E+06
.4345E+03	.2229E+03	.2681E+06
.4925E+03	.2075E+03	.2496E+06
.5505E+03	.1939E+03	.2330E+06
.5785E+03	.1878E+03	.2257E+06
.6025E+03	.1830E+03	.2198E+06
.6605E+03	.1909E+03	.2295E+06
.7505E+03	.1843E+03	.2215E+06
.8605E+03	.1730E+03	.2077E+06
.9505E+03	.1620E+03	.1944E+06
.1051E+04	.1520E+03	.1823E+06
.1151E+04	.1430E+03	.1714E+06
.1836E+04	.1389E+03	.1664E+06
.1837E+04	0.	0.

TABLE 6.2.1-38

0.6 FT^2, SPLIT, 30% POWER
AFW RUNOUT

Time	m (lb/sec)	e (BTU/sec)
.1000E-01	.1227E+04	.1463E+07
.1000E+01	.1220E+04	.1454E+07
.2500E+01	.1207E+04	.1440E+07
.4500E+01	.1193E+04	.1424E+07
.6500E+01	.1173E+04	.1400E+07
.8500E+01	.1167E+04	.1394E+07
.1050E+02	.1164E+04	.1390E+07
.1250E+02	.1162E+04	.1387E+07
.1450E+02	.1165E+04	.1391E+07
.1650E+02	.1125E+04	.1345E+07
.1850E+02	.1077E+04	.1289E+07
.2050E+02	.1034E+04	.1238E+07
.4950E+02	.6894E+03	.8299E+06
.7850E+02	.5537E+03	.6669E+06
.1075E+03	.4881E+03	.5878E+06
.1365E+03	.4473E+03	.5386E+06
.1655E+03	.4181E+03	.5033E+06
.1945E+03	.3919E+03	.4716E+06
.2235E+03	.3694E+03	.4444E+06
.2525E+03	.3500E+03	.4208E+06
.2815E+03	.3327E+03	.3999E+06
.3205E+03	.3125E+03	.3753E+06
.3785E+03	.2856E+03	.3428E+06
.4365E+03	.2622E+03	.3144E+06
.4945E+03	.2416E+03	.2895E+06
.5525E+03	.2234E+03	.2675E+06
.6005E+03	.2099E+03	.2511E+06
.6205E+03	.2166E+03	.2591E+06
.6445E+03	.2180E+03	.2608E+06
.6845E+03	.2146E+03	.2568E+06
.7245E+03	.2101E+03	.2513E+06
.8005E+03	.2285E+03	.2736E+06
.8525E+03	.2285E+03	.2736E+06
.9005E+03	.2276E+03	.2725E+06
.9505E+03	.2276E+03	.2726E+06
.1115E+04	.2279E+03	.2728E+06
.1197E+04	.2271E+03	.2719E+06
.1201E+04	.2227E+03	.2665E+06
.1227E+04	.2227E+03	.2665E+06
.1228E+04	0.	0.

TABLE 6.2.1-39 (Sheet 1)

CONTAINMENT DATA
MINIMUM CONTAINMENT BACKPRESSURE ANALYSIS

I. Conservatively High Estimate of Containment Net Free Volume

CONTAINMENT VOLUME IN FT^3	
Upper Compartment	651,000
Lower Compartment	271,000
Ice Condenser	181,000
Dead End Compartments (Include all accumulator rooms, both fan compartments, instrument room, pipe tunnel)	130,000
	1,233,000

II. Initial conditions

A.	Containment Pressure	15.0 psia
B.	Lowest Operational Containment Temperature for the Upper, Lower and Dead Ended Compartments	85°F 100°F
C.	High Refueling Water Storage Tank Temperature	100°F
D.	Lowest Temperature Outside Containment	5°F
E.	High Initial Spray Temperature	100°F
F.	Lowest Annulus Temperature	40°F

III. Structural Heat Sinks**

A. For Each Surface

1. Description of Surface

2. Conservatively High Estimate of Area Exposed to Containment Atmosphere — See Table 6.2.1-1

3. Location in Containment by Compartment

TABLE 6.2.1-39 (Sheet 2)

CONTAINMENT DATA
MINIMUM CONTAINMENT BACKPRESSURE ANALYSIS

B.	For Each Separate Layer of Each Surface	
	1. Material	
	2. Conservatively Large Estimate of Layer Thickness	See Table 6.2.1-1
	3. Conservatively High Value of Material Conductivity	See Table 6.2.1-1
	4. Conservatively High Value of Volumetric Heat Capacity	See Table 6.2.1-1
IV.	Spray System	
A.	Runout Flow for a Spray Pump*** (Containment Spray)	7700 gpm
B.	Number of Spray Pumps Operating with No Diesel Failure	2/Unit
C.	Number of Spray Pumps Operating with One Diesel Failure	1/Unit
D.	Assumed Post Accident Initiation of Spray System	25 secs.
V.	Deck Fans	
A.	Fastest Post Accident Initiation of Deck Fans	10 mins.
B.	Conservatively High Flow Rate per Fan	42,000 cfm
VI.	Conservatively Low Hydrogen Skimmer System Flow Rate	100/ea cfm

** Structural Heat Sinks should also account for any surfaces neglected in Containment Integrity Analysis.

*** Runout flow is for a break immediately downstream of the pump. In that event, the spray water will not enter the containment.

TABLE 6.2.1-40

MAXIMUM REVERSE DIFFERENTIAL PRESSURE SENSITIVITY ANALYSIS
BASE CASE

Westinghouse ECCS Structural Heat Transfer Model

Hot Sprays at Runout Flow

Minimum Containment Temperature

Dead Ended Volume is swept

Max Reverse Differential Pressure = 0.65 psi

Case	Variable	Change in Max ΔP (psi)
1.	Ice condenser flow through the drains acts as 50 percent thermal efficient spray when flow stops into ice condenser	+0.2
2.	Same as Case 1, except 100 percent thermal efficiency	+0.4
3.	Maximum containment temperature	-0.2
4.	Heat transfer coefficient to sump equals 5 times H_{MAX}	Less than 0.1
5.	Same as Case 2, except drain flowrate times 1.5	+0.6
6.	Combination of Cases 2 and 4	+0.4
7.	1 bay of ice condenser doors remains open	-0.65
8.	Same as Case 6 except Equation (3) written as $H = H_{stag} + [H_{max} - H_{stag}]\, e^{-.025[t-tp]}$	+.55
9.	Same as Case 6 except 5 times upper to lower resistance	+2.0

TABLE 6.2.1-41 (Sheet 1)

MAXIMUM REVERSE DIFFERENTIAL PRESSURE ANALYSIS
ICE CONDENSER DRAIN FLOW VS. TIME

Time (Sec.)	Sump Temp °F	Ice Condenser Steam Exit Flow (lb/sec.)
13.1	190.3	-1.74
13.8	190.6	-16.3
14.4	190.7	-1.76
15.0	190.9	-1.54
15.4	191.1	-1.37
15.9	191.2	-1.23
16.3	191.3	-.13
16.6	191.4	-.09
17.0	191.5	-.09
17.4	191.6	-.08
17.8	191.7	-.08
18.2	191.8	-.07
18.6	191.9	-.07
19.0	192.0	-.07
19.3	192.1	-.07
19.7	192.2	-.06
20.0	192.3	-1.04
20.3	192.4	-.93
20.9	192.5	-1.17
21.5	192.7	-1.43
21.8	192.8	-2.24
22.4	192.9	-2.95
23.0	193.1	-2.85
23.6	193.2	-2.64
23.9	193.3	-2.53
24.5	193.4	-2.34
25.1	193.8	-2.17
25.4	194.0	-2.05
25.7	194.1	-1.94
26.0	194.2	-1.85
26.6	194.6	-1.69
27.2	194.8	-1.58
27.5	194.9	-1.53
28.0	195.2	-1.45
29.5	195.6	-1.40
30.1	195.8	-1.42
30.7	196.0	-1.44
31.3	196.2	-1.45
31.9	196.3	-1.45
32.5	196.4	-1.43
33.1	196.5	-1.40
33.7	196.6	-1.36
34.3	196.8	-1.31
34.9	196.9	-1.26
35.5	196.9	-1.20

TABLE 6.2.1-41 (Sheet 2)

MAXIMUM REVERSE DIFFERENTIAL PRESSURE ANALYSIS
ICE CONDENSER DRAIN FLOW VS. TIME

Time (Sec.)	Sump Temp °F	Ice Condenser Steam Exit Flow (lb/sec.)
36.0	197.0	-1.115
36.9	197.2	-0.96
37.9	197.3	-0.80
38.9	197.4	-0.63
40.1	197.4	-0.44
41.3	197.5	-0.29
42.2	197.5	-0.20
44.0	197.4	-.09
44.9	197.3	-0.4
45.4	197.3	.12
46.7	197.2	.19
47.6	197.0	.20
48.9	196.9	.19
49.8	196.7	.17
51.2	196.5	.12
52.3	196.4	.07
53.6	196.1	.01
54.4	196.0	-.01
55.2	195.9	-.03
56.2	195.7	-.05
57.1	195.5	-.07
58.0	195.4	-.10
59.0	195.2	-.17
59.9	195.0	-.14
60.9	194.9	-.15
61.8	194.7	-.17
62.8	194.5	-.18
63.7	194.3	-.20
64.7	194.2	-.22
65.6	194.0	-.24
66.6	193.8	-.31
67.5	193.6	-.41
68.4	193.5	-.60
69.4	193.3	.20
70.3	193.2	.63
71.3	193.0	.84
72.2	192.9	1.05
73.2	192.7	1.25
74.1	192.6	1.39
75.1	192.5	1.54
76.0	192.4	1.66
77.0	192.3	1.78

TABLE 6.2.1-42 (Sheet 1)

Mass and Energy Release Rates
Into Pressurizer Enclosure

Time (sec)	Mass flow x 10^{-3} (lbm/sec)	Energy x 10^{6} (Btu/sec)
0.0	0.0	0.0
0.00251	5.0473	3.0977
0.00502	5.2333	3.2013
0.01002	5.1051	3.1226
0.01251	5.0746	3.1029
0.01755	5.3833	3.2753
0.02505	5.5402	3.3601
0.03259	5.8746	3.5479
0.04002	5.9221	3.5716
0.05005	5.6865	3.4332
0.07250	5.7877	3.4868
0.09001	5.4917	3.3157
0.11253	5.9404	3.5710
0.13756	5.5454	3.3445
0.15755	5.6392	3.3979
0.17760	5.4721	3.3026
0.19254	5.5189	3.3291
0.21254	5.4725	3.3025
0.23508	5.5465	3.3446
0.27752	5.5345	3.3378
0.35027	5.3649	3.2411
0.38001	5.2985	3.2031
0.41515	5.3825	3.2507
0.45006	5.2660	3.1842

TABLE 6.2.1-42 (Sheet 2)

Mass and Energy Release Rates
Into Pressurizer Enclosure

Time (sec)	Mass flow x 10^{-3} (lbm/sec)	Energy x 10^{6} (Btu/sec)
0.57002	5.2492	3.1738
0.77015	5.1816	3.1336
1.00005	5.1562	3.1169
2.00015	5.0326	3.0400

TABLE 6.2.1-43

Pressurizer Geometric Data

Node	Volume (ft^3)
51	2508
52	438
53	843
54	848

Flow Path	K	F	L_I (ft)	D_H (ft)	A (ft^2)	L_{EQ} (ft)	a/A
5l to 52	0.50	0.02	13.3	2.96	18.6	11.8	0.12
51 to 53	0.50	0.02	15.1	5.82	40.3	12.2	0.26
51 to 54	0.50	0.02	15.1	5.82	40.3	12.2	0.26
53 to 52	0.04	0.02	8.1	3.00	31.6	6.6	0.25
54 to 52	0.04	0.02	8.1	3.00	31.6	6.6	0.25
52 to lower compartment	1.50	0.02	11.8	2.96	18.6	11.8	1.00
53 to lower compartment	1.50	0.02	10.2	3.93	28.6	6.9	0.73
54 to lower compartment	1.50	0.02	10.3	5.64	30.7	7.3	0.74

TABLE 6.2.1-44

Peak Differential Pressure - Pressurizer Enclosure

Across Enclosure Walls

Nodes	Differential Press. (PSI)	Time (sec)
51 - Upper Compartment	13.2	0.32
52 - " "	12.1	0.34
53 - " "	12.1	0.34
54 - " "	12.1	0.34

Across Pressurizer Vessel

Nodes	Differential Press. (PSI)	Time (sec)
52 - 53	0.49	0.053
52 - 54	0.38	0.055
53 - 54	0.12	0.044

TABLE 6.2.2-1

CONTAINMENT SPRAY PUMP DESIGN PARAMETERS

Characteristic	Data
Quantity Per Unit	2
Design Pressure, psig	300
Design Temperature Degree, °F	250
Design Flow Rate, gpm	4,750
Design Head, ft	374

Note: The pump motors are direct coupled and nonoverloading to the end of the pump curve.

TABLE 6.2.2-2

CONTAINMENT SPRAY HEAT EXCHANGER DESIGN PARAMETERS

Characteristic	Data
Quantity Per Unit	2
Type	Shell and Tube (Counterflow)
Heat Transfer Per Unit, BTU Per Hour	95×10^6
Flow Shell Side, gpm	6,028
Flow Tube Side, gpm	4,750
Tube Side Inlet Temperature, °F	146
Shell Side Inlet Temperature, °F	83
Tube Side Outlet Temperature, °F	106
Shell Side Outlet Temperature, °F	115
Design Pressure Shell Tube, psig	150/300
Design Temperature Shell Tube, °F	200/300

TABLE 6.2.2-3

REDUNDANCY AND INDEPENDENCE

Component	Malfunction	Comments and Consequences
Spray Nozzles	Clogged	The large number of nozzles makes the clogging of a significant number of nozzles incredible.
Spray Pump	Stops running or fails to start	Two 100 percent capacity pumps provide redundancy.
Heat Exchangers	Tube leak	Two 100 percent capacity heat exchangers provide redundancy.
Valve	Fails to open	Two 100 percent flow paths

TABLE 6.2.3-1 (Sheet 1)

REGULATORY GUIDE 1.52 (REV 2) SECTION APPLICABILITY
FOR THE EMERGENCY GAS TREATMENT SYSTEM

Reg. Guide Section	Applicability To This System	Comment Index	Reg. Guide Section	Applicability To This System	Comment Index
C.1.a	Yes	Note 1	C.3.i	Yes	Note 10
C.1.b	Yes	Note 2	C.3.j	Yes	Notes 4,8
C.1.c	Yes	Note 2	C.3.k	Yes	Note 7
C.1.d	Yes	---	C.3.l	No	Note 10
C.1.e	Yes	---	C.3.m	Yes	
C.2.a	Yes	Note 13	C.3.n	No	Notes 4,6
			C.3.o	Yes	---
C.2.b	Yes	---	C.3.p	Yes	Note 10
C.2.c	Yes	---			
C.2.d	Yes	Note 3			
C.2.e	Yes	Note 13	C.4.a	Yes	Note 10
C.2.f	Yes	---	C.4.b	Yes	
C.2.g	Yes	---	C.4.c	Yes	Note 10
C.2.h	Yes	---	C.4.d	Yes	Note 14
C.2.i	Yes	---	C.4.e	Yes	---
C.2.j	No	Note 4			
C.2.k	Yes	Note 5			
C.2.l	No	Notes 4,6			
C.3.a	No	Note 12			
C.3.b	Yes	Note 10	C.5.a	No	Note 9
C.3.c	Yes	Note 10	C.5.b	No	Note 7
C.3.d	Yes	Note 10	C.5.c	Yes	Note 9
			C.5.d	Yes	Note 7
C.3.e	Yes	Note 10	C.6.a	No	Note 11
C.3.f	Yes	---	C.6.b	Yes	Note 10
C.3.g	Yes	Note 10			
C.3.h	Yes	---			

Notes:

1. The Emergency Gas Treatment System is designed to withstand conditions resulting from the design basis LOCA.

2. The design is consistent with assumptions found in Regulatory Guide 1.4; Regulatory Guides 1.3 and 1.25 are not applicable.

3. No significant pressure surges to this system are envisioned resulting from the design basis LOCA. Thus, the system needs no special protection features to offset pressure surges.

TABLE 6.2.3-1 (Sheet 2)
(Continued)

REGULATORY GUIDE 1.52 (REV 2) SECTION APPLICABILITY
FOR THE EMERGENCY GAS TREATMENT SYSTEM

4. Compliance with this section is not required since the system was designed and fabricated well before publication of the regulatory guide.

5. There are no outdoor air intakes associated with the Emergency Gas Treatment System.

6. No enhancement in safety is foreseen by utilizing low leakage ducting in this system. Any leakage which occurs inside the Shield Building would eventually re-enter the Emergency Gas Treatment System and be processed. No leakage is foreseen to the Auxiliary Building from the ducting between the Shield Building and the filter housing since air inside the duct will be at a lower pressure than the surroundings. If any leakage did occur to the Auxiliary Building, it would be processed by the Auxiliary Building Gas Treatment System before release to the atmosphere. Leakage from ducting on the downstream side of the filter housing would cause no problem since it would have been cleaned by the Emergency Gas Treatment System filters and absorbers.

7. Compliance with this section is not required since the system was designed and fabricated before the present revision of 1.52 (Rev. 2).

8. Water sprays are provided, also the capability is provided to cool an inactive unit which is loaded with radioactive material and to limit the temperature rise from radioactivity induced heat and thus prevent auto ignition of the charcoal.

9. Compliance with ANSI N510 is not required since the system was designed and fabricated well before publication of the ANSI document. However, the system (i.e., filter banks) will be tested using the procedures outlined in ANSI N510.

10. Compliance with ANSI N509 is not required since the system was designed and fabricated well before publication of the ANSI document. The system met this section of Reg. Guide 1.52 at the time of design and fabrication. However, whenever possible parts or components which are replaced, the replacement parts and components will comply fully with the latest issue of ANSI N509.

11. Compliance with this section is not required since charcoal filter testing is performed in accordance with ASTM D3803-1989, “Standard Test Method for Nuclear-Grade Activated Carbon,” in order to provide assurance for complying with the current licensing basis, per NRC Generic letter 99-02, “Laboratory Testing of Nuclear-Grade Activated Charcoal.”

12, Compliance with this section is not required based on the calculated low relative humidity (<70%) inlet air entering the EGTS filter housing air cleanup units during accident conditions. Reference EDC E21761A and EN DES calculation TI-ECS-98, Rev. 1 (B45 860324 236).

13. The position is met except that demister pads are not provided. See Note 12 for demisters requirements.

14. Compliance with this section is not required due to changes made by the Improved Technical Specifications (ITS) license amendment request (LAR) and acknowledged in the associated NRC safety evaluation report. The system met this section of RG 1.52 at the time of design and fabrication. However, the ITS LAR revised the required run time from 10 hours to fifteen minutes. The NRC endorsed licensee control of the monthly frequency requirement through approval of the use of the Surveillance Frequency Control Program.

TABLE 6.2.3-2 (Sheet 1)

REGULATORY GUIDE 1.52 (REV 2) SECTION APPLICABILITY
FOR THE AUXILIARY BUILDING GAS TREATMENT SYSTEM

Reg. Guide Section	Applicability To This System	Comment Index	Reg. Guide Section	Applicability To This System	Comment Index
C.1.a	Yes	Note 1	C.3.i	Yes	Note 8
C.1.b	Yes	Note 2	C.3.j	No	Note 3
C.1.c	Yes	Note 2	C.3.k	No	Note 3
C.1.d	Yes	---	C.3.l	Yes	Note 8
C.1.e	Yes	---	C.3.m	Yes	---
C.2.a	No	Notes 3,4	C.3.n	No	Notes 3,7
			C.3.o	Yes	---
			C.3.p	Yes	Note 8
C.2.b	Yes	---			
C.2.c	Yes	---			
C.2.d	Yes	Note 5	C.4.a	Yes	---
C.2.e	Yes	---	C.4.b	Yes	Note 8
C.2.f	Yes	---	C.4.c	Yes	Note 8
C.2.g	Yes	---	C.4.d	Yes	Note 13
C.2.h	Yes	---	C.4.e	Yes	---
C.2.i	Yes				
C.2.j	No	Notes 3,6			
C.2.k	Yes				
C.2.1	No	Notes 3,7			
C.3.a	No	Note 9			
C.3.b	Yes	Note 3	C.5.a	No	Note 11
C.3.c	Yes	Note 8	C.5.b	No	Note 3
C.3.d	Yes	Note 8	C.5.c	Yes	Note 11
			C.5.d	Yes	Note 11
C.3.e	Yes	Note 8	C.6.a	No	Note 12
C.3.f	Yes	---	C.6.b	Yes	Note 8
C.3.g	Yes	Note 8			
C.3.h	Yes	---			

Notes:

1. The postulated DBA for the Auxiliary Building Gas Treatment System is the design basis LOCA.

2. The design is consistent with assumptions found in Regulatory Guide 1.4.

TABLE 6.2.3-2 (Sheet 2)
(Continued)

REGULATORY GUIDE 1.52 (REV 2) SECTION APPLICABILITY
FOR THE AUXILIARY BUILDING GAS TREATMENT SYSTEM

3. Compliance with this system is not required since the system was designed and fabricated well before publication of the regulatory guide.

4. The position is met except that demisters are not provided and there are not HEPA filters downstream of the carbon absorbers.

5. No significant pressure surges to this system are envisioned resulting from the design basis LOCA. Thus the system needs no special protection features to mitigate pressure surges.

6. It would be possible to remove the unit intact but not practical. The need to do so is considered to be negligible.

7. Low leakage would not enhance the safety of the system since any leakage that occurs will eventually be routed back to the ABGTS and be processed before being released to the atmosphere. Leakage from the ABSCE to the atmosphere will be negligible since it is maintained at a negative pressure with respect to the atmosphere.

8. Compliance with ANSI N509 is not required since the system was designed and fabricated well before publication of the ANSI document. However, the system will be tested, whenever possible, using the procedures outlined in ANSI N509.

9. Demisters are not provided in the system.

10. Compliance with this section is not a licensing requirement.

11. Compliance with ANSI N510 is not required since the system was designed and fabricated well before publication of ANSI document. However, the system will be tested using the procedures outlined in ANSI N510.

12. Compliance with this section is not required since charcoal filter testing is performed in accordance with ASTM D3803-1989, “Standard Test Method for Nuclear-Grade Activated Carbon,” in order to provide assurance for complying with the current licensing basis, per NRC Generic letter 99-02, “Laboratory Testing of Nuclear-Grade Activated Charcoal.”

13. Compliance with this section is not required due to changes made by the Improved Technical Specifications (ITS) license amendment request (LAR) and acknowledged in the associated NRC Safety evaluation report. The system met this section of RG 1.52 at the time of design and fabrication. However, the ITS LAR revised the required run time from 10 hours to fifteen minutes. The NRC endorsed licensee control of the monthly frequency requirement through approval of the use of the Surveillance Frequency Control Program.

TABLE 6.2.4-1 (Sheet 1)

CONTAINMENT PENETRATIONS
CONTAINMENT ISOLATION VALVE STROKE TIME REQUIREMENTS

VALVE NUMBER		FUNCTION	MAXIMUM ISOLATION TIME (SECONDS)
A. PHASE "A" ISOLATION			
1	FCV-1-7	SG Blow Dn	10
2	FCV-1-14	SG Blow Dn	10
3	FCV-1-25	SG Blow Dn	10
4	FCV-1-32	SG Blow Dn	10
5	FCV-26-240	Fire Protection Isol.	20
6	FCV-26-243	Fire Protection Isol.	20
7	FSV-30-134	Cntment Bldg Press Trans Sense Line	4
8	FSV-30-135	Cntment Bldg Press Trans Sense Line	4
9	FCV-31C-222	CW-Inst Room Clrs	10
10	FCV-31C-223	CW-Inst Room Clrs	10
11	FCV-31C-224	CW-Inst Room Clrs	10
12	FCV-31C-225	CW-Inst Room Clrs	10
13	FCV-31C-229	CW-Inst Room Clrs	10
14	FCV-31C-230	CW-Inst Room Clrs	10
15	FCV-31C-231	CW-Inst Room Clrs	10
16	FCV-31C-232	CW-Inst Room Clrs	10
17	FSV-43-2	Sample Przr Steam Space	10
18	FCV-43-3*	Sample Przr Steam Space	10
19	FV-43-11	Sample Przr Liquid	10
20	FCV-43-12*	Sample Przr Liquid	10
21	FSV-43-22	Sample RC Outlet Hdrs	10
22	FCV-43-23*	Sample RC Outlet Hdrs	10
23	FSV-43-34	Accum Sample	5
24	FCV-43-35*	Accum Sample	5
25	FCV-43-55	SG Blown DN Sample Line	10
26	FCV-43-58	SG Blown DN Sample Line	10
27	FCV-43-61	SG Blown DN Sample Line	10
28	FCV-43-64	SG Blown DN Sample Line	10
29	FCV-61-96	Glycol Inlet to Floor Cooler	30
30	FCV-61-97	Glycol Inlet to Floor Cooler	30
31	FCV-61-110	Glycol Inlet to Floor Cooler	30
32	FCV-61-122	Glycol Inlet to Floor Cooler	30
33	FCV-61-191	Ice Condenser- Glycol In	30
34	FCV-61-192	Ice Condenser- Glycol In	30
35	FCV-61-193	Ice Condenser- Glycol Out	30
36	FCV-61-194	Ice Condenser- Glycol Out	30

*(These valves are FSCV on Unit 1.)

TABLE 6.2.4-1 (Sheet 2)

CONTAINMENT PENETRATIONS

CONTAINMENT ISOLATION VALVE STROKE TIME REQUIREMENTS

VALVE NUMBER		FUNCTION	MAXIMUM ISOLATION TIME (SECONDS)
43	FCV-62-61	RCP Seals	10
44	FCV-62-63	RCP Seals	10
45	FCV-62-72	Letdown Line	10
46	FCV-62-73	Letdown Line	10
47	FCV-62-74	Letdown Line	10
48	FCV-62-77	Letdown Line	20
49	FCV-63-23	Accum to Hold Up Tank	10
50	FCV-63-64	WDS N_2 to Accum	10
51	FCV-63-71	Accum to Hold Up Tank	10
52	FCV-63-84	Accum to Hold Up Tank	10
53	FCV-68-305	WDS N_2 to PRT	10
54	FCV-68-307	PRT to Gas Analyzer	10
55	FCV-68-308	PRT to Gas Analyzer	10
56	FCV-70-85	CCS from Excess Lt Dn Hx	10
57	FCV-70-143	CCS to Excess Lt Dn Hx	60
58	FCV-77-9	RCDT Pump Disch	10
59	FCV-77-10	RCDT Pump Disch	10
60	FCV-77-18	RCDT and PRT to V H	10
61	FCV-77-19	RCDT and PRT to V H	10
62	FCV-77-20	N_2 to RCDT	10
63	FCV-77-127	Floor Sump Pump Disch	10
64	FCV-77-128	Floor Sump Pump Disch	10
65	FCV-81-12	Primary Water Makeup	10
B. PHASE "B" ISOLATION			
1	FCV-32-80 (U1), FCV-32-81 (U2)	Control Air Supply	10
2	FCV-32-102 (U1), FCV-32-103 (U2)	Control Air Supply	10
3	FCV-32-110 (U1), FCV-32-111 (U2)	Control Air Supply	10
4	FCV-67-83	ERCW - LWR Cmpt Cirs	60
5	FCV-67-87	ERCW - LWR Cmpt Cirs	60
6	FCV-67-88	ERCW - LWR Cmpt Cirs	60
7	FCV-67-89	ERCW - LWR Cmpt Cirs	70
8	FCV-67-90	ERCW - LWR Cmpt Cirs	70
9	FCV-67-91	ERCW - LWR Cmpt Cirs	60
10	FCV-67-95	ERCW - LWR Cmpt Cirs	60
11	FCV-67-96	ERCW - LWR Cmpt Cirs	60
12	FCV-67-99	ERCW - LWR Cmpt Cirs	60
13	FCV-67-103	ERCW - LWR Cmpt Cirs	60
14	FCV-67-104	ERCW - LWR Cmpt Cirs	60
15	FCV-67-105	ERCW - LWR Cmpt Cirs	70
16	FCV-67-106	ERCW - LWR Cmpt Cirs	70
17	FCV-67-107	ERCW - LWR Cmpt Cirs	60
18	FCV-67-111	ERCW - LWR Cmpt Cirs	60
19	FCV-67-112	ERCW - LWR Cmpt Cirs	60
20	2-FCV-67-130	ERCW - Up Cmpt Clrs	60
21	2-FCV-67-131	ERCW - Up Cmpt Clrs	60

TABLE 6.2.4-1 (Sheet 3)

CONTAINMENT PENETRATIONS

CONTAINMENT ISOLATION VALVE STROKE TIME REQUIREMENTS

VALVE NUMBER		FUNCTION	MAXIMUM ISOLATION TIME (SECONDS)
22	2-FCV-67-133	ERCW - Up Cmpt Clrs	60
23	2-FCV-67-134	ERCW - Up Cmpt Clrs	60
24	2-FCV-67-138	ERCW - Up Cmpt Clrs	60
25	2-FCV-67-139	ERCW - Up Cmpt Clrs	60
26	2-FCV-67-141	ERCW - Up Cmpt Clrs	60
27	2-FCV-67-142	ERCW - Up Cmpt Clrs	60
28	2-FCV-67-295	ERCW - Up Cmpt Clrs	60
29	2-FCV-67-296	ERCW - Up Cmpt Clrs	60
30	2-FCV-67-297	ERCW - Up Cmpt Clrs	60
31	2-FCV-67-298	ERCW - Up Cmpt Clrs	60
32	FCV-70-87	RCP Thermal Barrier Ret	60
33	FCV-70-89	CCS from RCP Oil Coolers	60
34	FCV-70-90	RCP Thermal Barrier Ret	60
35	FCV-70-92	CCS from RCP Oil Coolers	60
36	FCV-70-134	To RCP Thermal Barriers	60
37	FCV-70-140	CCS to RCP Oil Coolers	60
38	FCV-70-141	CCS to RCP Oil Coolers	65
C. PHASE "A" CONTAINMENT VENT ISOLATION			
1	FCV-30-7	Upper Compt Purge Air Supply	4
2	FCV-30-8	Upper Compt Purge Air Supply	4
3	FCV-30-9	Upper Compt Purge Air Supply	4
4	FCV-30-10	Upper Compt Purge Air Supply	4
5	FCV-30-14	Lower Compt Purge Air Supply	4
6	FCV-30-15	Lower Compt Purge Air Supply	4
7	FCV-30-16	Lower Compt Purge Air Supply	4
8	FCV-30-17	Lower Compt Purge Air Supply	4
9	FCV-30-19	Inst Room Purge Air Supply	4
10	FCV-30-20	Inst Room Purge Air Supply	4
11	FCV-30-37	Lower Compt Pressure Relief	4
12	FCV-30-40	Lower Compt Pressure Relief	4
13	FCV-30-50	Upper Compt Purge Air Exh	4
14	FCV-30-51	Upper Compt Purge Air Exh	4
15	FCV-30-52	Upper Compt Purge Air Exh	4
16	FCV-30-53	Upper Compt Purge Air Exh	4
17	FCV-30-56	Lower Compt Purge Air Exh	4
18	FCV-30-57	Lower Compt Purge Air Exh	4
19	FCV-30-58	Inst Room Purge Air Exh	4
20	FCV-30-59	Inst Room Purge Air Exh	4
21	FCV-90-107	Cntmt Bldg LWR Compt Air Mon	5
22	FCV-90-108	Cntmt Bldg LWR Compt Air Mon	5
23	FCV-90-109	Cntmt Bldg LWR Compt Air Mon	5
24	FCV-90-110	Cntmt Bldg LWR Compt Air Mon	5
25	FCV-90-111	Cntmt Bldg LWR Compt Air Mon	5
26	FCV-90-113	Cntmt Bldg UPR Compt Air Mon	5
27	FCV-90-114	Cntmt Bldg UPR Compt Air Mon	5
28	FCV-90-115	Cntmt Bldg UPR Compt Air Mon	5

TABLE 6.2.4-1 (Sheet 4)

CONTAINMENT PENETRATIONS

CONTAINMENT ISOLATION VALVE STROKE TIME REQUIREMENTS

VALVE NUMBER		FUNCTION	MAXIMUM ISOLATION TIME (SECONDS)
29	FCV-90-116	Cntmt Bldg UPR Compt Air Mon	5
30	FCV-90-117	Cntmt Bldg UPR Compt Air Mon	5
D. OTHER			
1	FCV-30-46	Vaccum Relief Isolation Valve	25
2	FCV-30-47	Vaccum Relief Isolation Valve	25
3	FCV-30-48	Vaccum Relief Isolation Valve	25
4	FCV-62-90	Normal Charging Isolation Valve	12

TABLE 6.2.4-1 (Sheet 5)

CONTAINMENT PENETRATIONS

CONTAINMENT PENETRATION LIST

Penetration	Description	Inside Barrier	Outside Barrier
X-001	Equipment Hatch	Hatch	N/A
X-002A	Personnel Airlock	Airlock Door Bulkhead, Valve	Airlock Door, Flange Bulkhead, Valve
X-002B	Personnel Airlock	Airlock Door Bulkhead, Valve	Airlock Door, Flange Bulkhead, Valve
X-003	Fuel Transfer Tube	Blind Flange	N/A
X-004	Lower Comp. Purge Exh	30-56	30-57
X-005	Instr. Rm. Purge Exh.	30-58	30-59
X-006	Upper Comp. Purge Exh	30-50	30-51
X-007	Upper Comp. Purge Exh	30-52	30-53
X-008	Spare	N/A	N/A
X-009A	Upper Comp. Purge Sup	30-08	30-07
X-009B	Upper Comp. Purge Sup	30-10	30-09
X-010A	Lower Comp. Purge Sup	30-15	30-14
X-010B	Lower Comp. Purge Sup	30-17	30-16
X-011	Instr. Rm. Purge Sup	30-20	30-19
X-012A	Feedwater	Closed System	3-33 3-164 3-164A 3-174
X-012B	Feedwater	Closed System	3-47
X-012C	Feedwater	Closed System	3-87
X-012D	Feedwater	Closed System	3-100 3-171 3-171A 3-175
X-013A	Main Steam	Closed System	1-04, 1-147, 1-15, 1-05, and Safeties
X-013B	Main Steam	Closed System	1-11, 1-148, 1-12, and Safeties
X-013C	Main Steam	Closed System	1-22, 1-149, 1-23, and Safeties

TABLE 6.2.4-1 (Sheet 6)

CONTAINMENT PENETRATIONS

CONTAINMENT PENETRATION LIST

Penetration	Description	Inside Barrier	Outside Barrier
X-013D	Main Steam	Closed System	1-29, 1-150, 1-16, 1-30, and Safeties
X-014A	Stm. Gen. Blwdn.	Closed System	1-14 43-58
X-014B	Stm. Gen. Blwdn.	Closed System	1-32 43-64
X-014C	Stm. Gen. Blwdn.	Closed System	1-25 43-61
X-014D	Stm. Gen. Blwdn.	Closed System	1-07 43-55
X-015	CVCS Letdown	62-72 62-73 62-74 62-662	62-77
X-016	Normal Charging	62-543	62-90
X-017	RHR Return	63-640 63-643 63-158 63-637 63-172	Closed System
X-018	Spare	N/A	N/A
X-019A	RHR Sump	N/A	Closed System 63-72
X-019B	RHR Sump	N/A	Closed System 63-73
X-020A	SIS - RHR Pump Discharge - Train B	63-633 63-635 63-112	63-94 Closed System
X-020B	SIS - RHR Pump Discharge - Train A	63-632 63-634 63-111	63-93 Closed System

TABLE 6.2.4-1 (Sheet 7)

CONTAINMENT PENETRATIONS

CONTAINMENT PENETRATION LIST

Penetration	Description	Inside Barrier	Outside Barrier
X-021	SI Pump Discharge to Hot Legs - Train B	63-547 63-549 63-167	63-157 Closed System
X-022	Injection Tank Charging Pump Discharge	63-581 63-174	Closed System 63-25 63-26
X-023	PASF HL 3 Train B	43-310	43-309
X-024	SI Relief Valve Discharge	68-559	Closed System 72-512, 513 62-505 63-626, 627 63-534, 535, 536 63-511
X-025A	Przr. Liquid Sample	43-02	43-03
X-025B	Containment Sensor 30-311/44	N/A	30-311X 30-311Y 30-44X 30-44Y
X-025C	Rx Vessel Level	N/A	N/A
X-025D	Przr. Liquid Sample	43-11	43-12
X-026A	Containment Sensor 30-310/43		30-310X 30-310Y 30-43X 30-43Y
X-026B	Control Air - Train B - Unit 1	32-297	32-102 32-295
X-026B	Control Air - Train B - Unit 2	32-348	32-103 32-341
X-026C	Rx Vessel Level	N/A	N/A
X-027A	Containment Sensor 30-30C	N/A	30-30CY 30-30CX
X-027B	Containment Sensor 30-42	N/A	30-42Y 30-42X
X-027C	ILRT	52-504	52-505
X-027D	Rx Vessel Level	N/A	N/A
X-028	Spare	N/A	N/A
X-029	CCS from RCP Coolers	70-89 70-698	70-92

TABLE 6.2.4-1 (Sheet 8)

CONTAINMENT PENETRATIONS

CONTAINMENT PENETRATION LIST

Penetration	Description	Inside Barrier	Outside Barrier
X-030	Accum. to HU Tank	63-71	63-84 63-23
X-031	Spare	N/A	N/A
X-032	SI Pump discharge hot legs, Train A	63-545 63-543 63-21	63-156 Closed System
X-033	SI Pump discharge	63-553 63-555 63-551 63-557 63-121	63-22 Closed System
X-034 - Unit 1	Control Air - Nonessential	32-377	32-110 32-375
X-034 - Unit 2	Control Air - Nonessential	32-387	32-111 32-385
X-035	CCW From Excess Ltdn. HX	Closed System 70-703	70-85
X-036	Spare	N/A	N/A
X-037	Spare	N/A	N/A
X-038	Spare	N/A	N/A
X-039A	N2 to Accumulators	77-868	63-64
X-039B	N2 to PRT	77-849	68-305
X-039C	Spare	N/A	N/A
X-039D	Spare	N/A	N/A
X-040A	Aux. Feedwater	Closed System	3-156 3-156A 3-173
X-040B	Aux. Feedwater	Closed System	3-148 3-148A 3-172
X-040C	Spare	N/A	N/A
X-040D	H2 Purge Supply	N/A	Blind Flange
X-041	RBFE Sump Pump Disch.	77-127	77-128
X-042	Primary Water	81-502	81-12

TABLE 6.2.4-1 (Sheet 9)

CONTAINMENT PENETRATIONS

CONTAINMENT PENETRATION LIST

Penetration	Description	Inside Barrier	Outside Barrier
X-043A	To RCP Seals	62-563 62-579	Closed System*
X-043B	To RCP Seals	62-561 62-577	Closed System*
X-043C	To RCP Seals	62-562 62-578	Closed System*
X-043D	To RCP Seals	62-560 62-576	Closed System*
X-044	Seal Water Return	62-61 62-639	62-63
X-45	RC drain tank and PRT to VH	77-18	77-19 77-20
X-46	RC drain tank pump discharge	77-09	77-10 84-511
X-47A	Glycol in	61-192 61-533	61-191
X-47B	Glycol out	61-194 61-680	61-193
X-048A	Containment Spray	72-547	72-39 Closed System
X-048B	Containment Spray	72-548	72-2 Closed System
X-049A	RHR Spray	72-556	Closed System 72-40 72-215E (capped) 72-215F 72-216E (capped) 72-216F
X-049B	RHR Spray	72-555	Closed System 72-41 72-217E (capped) 72-217F 72-218E (capped) 72-218F

*Valves 62-546, -549 and -550 are designated as the outboard CIV's for penetrations X-43A, B, C, and D.

TABLE 6.2.4-1 (Sheet 10)

CONTAINMENT PENETRATIONS

CONTAINMENT PENETRATION LIST

Penetration	Description	Inside Barrier	Outside Barrier
X-050A	RCP Therm Barr Ret	70-87 70-687	70-90
X-050B	RCP Therm Barr Sup	70-679	70-134
X-051	Fire Protection	26-1260	26-240
X-052	CCS to RCP Oil Coolers	70-141 70-791	70-140
X-053	CCW to Excess Ltdn. HX	Closed System 70-703	70-143
X-054	Thimble Renewal	N/A	Blind Flange
X-055	Spare	N/A	N/A
X-056	ERCW Supply to Lower Compt.	67-89 67-1523D	67-83
X-057	ERCW Return from Lower Compt.	67-111 67-575D	67-112
X-058	ERCW Supply to Lower Compt.	67-106 67-1523A	67-107
X-059	ERCW Return from Lower Compt.	67-87 67-575A	67-88
X-060	ERCW Supply to Lower Compt.	67-90 67-1523B	67-91
X-061	ERCW Return from Lower Compt.	67-103 67-575B	67-104
X-062	ERCW Supply to Lower Compt.	67-105 67-1523C	67-99
X-063	ERCW Return from Lower Compt.	67-95 67-575C	67-96
X-064	Inst. Rm. Chill Wtr. Ret.	31C-223 31C-752	31C-222
X-065	Inst. Rm. Chill Wtr. Supply	31C-225 31C-734	31C-224
X-066	Inst. Rm. Chill Wtr. Ret.	31C-230 31C-715	31C-229
X-067	Inst. Rm. Chill Wtr. Supply	31C-232 31C-697	31C-231
X-068 - Unit 2	Upper ERCW Supply	67-580D	67-141
X-068 - Unit 1	Spare	Open end	Capped

TABLE 6.2.4-1 (Sheet 11)

CONTAINMENT PENETRATIONS

CONTAINMENT PENETRATION LIST

Penetration	Description	Inside Barrier	Outside Barrier
X-069 - Unit 2	Upper ERCW Supply	67-580A	67-130
X-069 - Unit 1	Spare	Open end	Capped
X-070 - Unit 2	Upper ERCW Return	67-297 67-585B	67-139
X-070 - Unit 1	Spare	Open end	Capped
X-071 - Unit 2	Upper ERCW Return	67-296 67-585C	67-134
X-071 - Unit 1	Spare	Open end	Capped
X-072 - Unit 2	Upper ERCW Return	67-298 67-585D	67-142
X-072 - Unit 1	Spare	Open end	Capped
X-073 - Unit 2	Upper ERCW Return	67-295 67-585A	67-131
X-073 - Unit 1	Spare	Open end	Capped
X-074 - Unit 2	Upper ERCW Supply	67-580B	67-138
X-074 - Unit 1	Spare	Open end	Capped
X-075 - Unit 2	Upper ERCW Supply	67-580C	67-133
X-075 - Unit 1	Spare	Open end	Capped
X-076 - Unit 1	Service Air	33-704	33-740
X-076 - Unit 2	Service Air	33-722	33-739
X-077	Demin. H_2O	59-633	59-522 59-529
X-078	Fire Protection	26-1296	26-243
X-079A	Ice Blowing	N/A	Blind Flange
X-079B	Negative Return	N/A	Blind Flange
X-080	Lower Comp Press Relief	30-40	30-37
X-081	Spare	N/A	N/A
X-082	Refueling Cavity Pump Suction	78-560	78-561
X-083	Refueling Cavity Pump Disch.	78-558	78-557
X-084A	PRT to Gas Analyzer	68-308	68-307
X-084B	Spare	N/A	N/A
X-084C	Spare	N/A	N/A
X-084D	Spare	N/A	N/A
X-085A	Spare	Open	Capped
X-085B	Containment dp Sensor 30-45	N/A	30-45X 30-45Y

TABLE 6.2.4-1 (Sheet 12)

CONTAINMENT PENETRATIONS

CONTAINMENT PENETRATION LIST

Penetration	Description	Inside Barrier	Outside Barrier
X-085C	dp Sensor	N/A	N/A
X-085D	Spare	N/A	N/A
X-086A	Rx Vessel Level	N/A	N/A
X-086B	Rx Vessel Level	N/A	N/A
X-086C	Rx Vessel Level	N/A	N/A
X-086D	Spare	N/A	N/A
X-087A	ILRT	52-502	52-503
X-087B	Spare	N/A	N/A
X-087C	Spare	N/A	N/A
X-087D	ILRT	52-500	52-501
X-088	Shutdown Maint Access	N/A	Blind Flange
X-089	Spare	N/A	N/A
X-090 - Unit 1	Control Air - Train A	32-287	32-80 32-285
X-090 - Unit 2	Control Air - Train A	32-358	32-81 32-353
X-091	PASF Hot Leg 1	43-251	43-250 Train A
X-092A - Unit 1	H2 Analyzer	43-207 (Auto open pump start)	Closed System 43-452 (Auto open pump start)
X-092A - Unit 2	H2 Analyzer	43-207 (Auto open pump start)	Closed System 43-210A (Auto open pump start) FSV-43-210I
X-092B - Unit 1	H2 Analyzer	43-208 (Auto open pump start)	Closed System 43-453 (Auto open pump start)
X-092B - Unit 2	H2 Analyzer	43-208 (Auto open pump start)	Closed System 43-210A (Auto open pump start) FSV-43-210I
X-093	Accumulator Sample	43-34	43-35
X-094A	Upper Rad Mon Intake	90-109	90-107
X-094B	Upper Rad Mon Intake	90-108	90-107
X-094C	Upper Rad Mon Return	90-110	90-111
X-095A	Lower Rad Mon Intake	90-115	90-113
X-095B	Lower Rad Mon Intake	90-114	90-113
X-095C	Lower Rad Mon Return	90-116	90-117

TABLE 6.2.4-1 (Sheet 13)

CONTAINMENT PENETRATIONS

CONTAINMENT PENETRATION LIST

Penetration	Description	Inside Barrier	Outside Barrier
X-096A	Spare	N/A	N/A
X-096B	Spare	N/A	N/A
X-096C	Hot Leg Sample	43-22	43-23
X-097	P Sensor Line	30-134	30-135
X-098	ILRT	52-506	52-507
X-099 - Unit 1	H2 Analyzer	43-202 (Auto open pump start)	Closed System 43-451 (Auto open Pump Start)
X-099 - Unit 2	H2 Analyzer	43-202 (Auto open pump start)	Closed System 43-200A (Auto open pump start) FSV-43-200I
X-100 - Unit 1	H2 Analyzer	43-201 (Auto open pump start)	Closed System 43-450 (Auto open pump start)
X-100 - Unit 2	H2 Analyzer	43-201 (Auto open pump start)	Closed System 43-200A (Auto open pump start) FSV-43-200I
X-101	PASF Containment Air Intake - Train B	43-319	43-318
X-102	AFW Test Line	Closed System	3-352C
X-103	PASF Liquid Discharge to Containment	43-461	43-317 43-341
X-104	AFW Test Line	Closed System	3-351C
X-105	Spare	N/A	N/A
X-106	PASF Air Discharge to Containment	43-460	43-325 43-307
X-107	RHR Supply	74-1 74-2 74-505	N/A
X-108	Maintenance Penetration	Blind Flange	N/A
X-109	Maintenance Penetration	Blind Flange	N/A
X-110	Spare	N/A	N/A
X-111	Vacuum Relief	N/A	30-46 30-571 30-46 AY 30-46 AX

TABLE 6.2.4-1 (Sheet 14)

CONTAINMENT PENETRATIONS

CONTAINMENT PENETRATION LIST

Penetration	Description	Inside Barrier	Outside Barrier
X-112	Vacuum Relief	N/A	30-47 30-572 30-47AX 30-47AY
X-113	Vacuum Relief	N/A	30-48 30-573 30-48AX 30-48AY
X-114	Glycol Floor Cooling	61-122 61-745	61-110
X-115	Glycol Floor Cooling	61-97 61-692	61-96
X-116A	PASF Containment Air Intake - Train A	43-288	43-287
X-116B	Spare	N/A	N/A
X-116C	Spare	N/A	N/A
X-116D	Spare	N/A	N/A
X-117	Shutdown Maint. Access	N/A	Blind Flange
X-118	Layup Water Treatment	N/A	Blind Flange
X-120E	Miscellaneous power circuits	N/A	N/A
X-121E	Reactor coolant pumps	N/A	N/A
X-122E	Reactor coolant pumps	N/A	N/A
X-123E	Reactor coolant pumps	N/A	N/A
X-124E	Reactor coolant pumps	N/A	N/A
X-125E	Spare	N/A	N/A
X-126E	Fans and miscellaneous equipment	N/A	N/A
X-127E	Fans and miscellaneous equipment	N/A	N/A
X-128E	Fans and miscellaneous equipment	N/A	N/A
X-129E	Fans and miscellaneous equipment	N/A	N/A
X-130E	Spare	N/A	N/A
X-131E	Polar crane and ice condenser	N/A	N/A
X-132E	Control rod drive power	N/A	N/A
X-133E	Control rod drive power	N/A	N/A
X-134E	Pressurizer elec. Heaters	N/A	N/A

TABLE 6.2.4-1 (Sheet 15)

CONTAINMENT PENETRATIONS

CONTAINMENT PENETRATION LIST

Penetration	Description	Inside Barrier	Outside Barrier
X-135E	Pressurizer elec. Heaters	N/A	N/A
X-136E	Pressurizer elec. Heaters	N/A	N/A
X-137E	Pressurizer elec. heaters	N/A	N/A
X-138E	Misc. and incore thermocouples	N/A	N/A
X-139E	Process instructions ch II	N/A	N/A
X-140E	Incore instrumentation	N/A	N/A
X-141E	Miscellaneous power circuits	N/A	N/A
X-142E	Incore instrumentation	N/A	N/A
X-143E	Nuclear instr. det. channel III	N/A	N/A
X-144E	Miscellaneous power circuits	N/A	N/A
X-145E	Control rod position detection	N/A	N/A
X-146E	Control rod drive power	N/A	N/A
X-147E	Misc. control and power circuits	N/A	N/A
X-148E	Nondivisional instrumentation	N/A	N/A
X-149E	Miscellaneous control circuits	N/A	N/A
X-150E	Miscellaneous control circuits	N/A	N/A
X-151E	Nuclear instrumentation det. channel IV	N/A	N/A
X-152E	Miscellaneous power circuits	N/A	N/A
X-153E	Misc.and incore thermocouples	N/A	N/A
X-154E	Nondivisional instrumentation	N/A	N/A
X-155E	Spare	N/A	N/A
X-156E	Miscellaneous control circuits	N/A	N/A
X-157E	Miscellaneous control circuits	N/A	N/A
X-158E	Process instrumentation channel I	N/A	N/A
X-159E	Miscellaneous low level circuits	N/A	N/A
X-160E	Communication	N/A	N/A
X-161E	Nondivisional instrumentation	N/A	N/A
X-162E	Spare	N/A	N/A
X-163E	Nuclear instru. det. channel I	N/A	N/A
X-164E	Miscellaneous control circuits	N/A	N/A
X-165E	Process instru. Channel III	N/A	N/A
X-166E	Misc. control and power circuits	N/A	N/A
X-167E	Miscellaneous power circuits	N/A	N/A
X-168E	Nuclear Instru. det. channel I	N/A	N/A
X-169E	Process instru. channel IV	N/A	N/A
X-170E	Miscellaneous control circuits	N/A	N/A

TABLE 6.2.6-1

DATA TABLE FOR THE VACUUM RELIEF SYSTEM

Design Basis:	
Maximum containment external pressure differential	0.5 psid
Maximum shield building external pressure differential	2.0 psid
Design Parameters:	
Upper compartment free volume	651,000 ft^3
Lower compartment free volume	253,114 ft^3
Ice condenser free volume	110,521 ft^3
Dead end compartment free volume	129,900 ft^3
Upper ice plenum free volume	54,940 ft^3
Annulus space free volume	375,000 ft^3
Number of containment spray headers	2
Flow rate for each containment spray header	4,750 gpm
Distance between spray headers and upper deck	152 feet
Number of air return fans	2
Flow rate for each air return fan	40,000 cfm
Maximum initial upper compartment dry bulb temperature	110 °F
Maximum initial lower compartment dry bulb temperature	120 °F
Minimum initial upper compartment relative humidity	4 percent
Minimum containment spray water temperature	60 °F
Ice condenser temperature (dry air)	15 °F
Set pressure of ice condenser doors connected to the upper and lower compartment	1 psf
Resultant Design:	
Number of steel containment vacuum relief units	3 (1 redundant)
Maximum initial external pressure differential on the containment (containment vacuum relief system set pressure)	0.1 psid
Design flow rate of each containment vacuum relief unit at 0.5 psid	28 lb_m/sec
Maximum response time for any unit to be fully open for a design basis event	2.2 sec

Figure 6.2.1-1 Deleted by Amendment 13

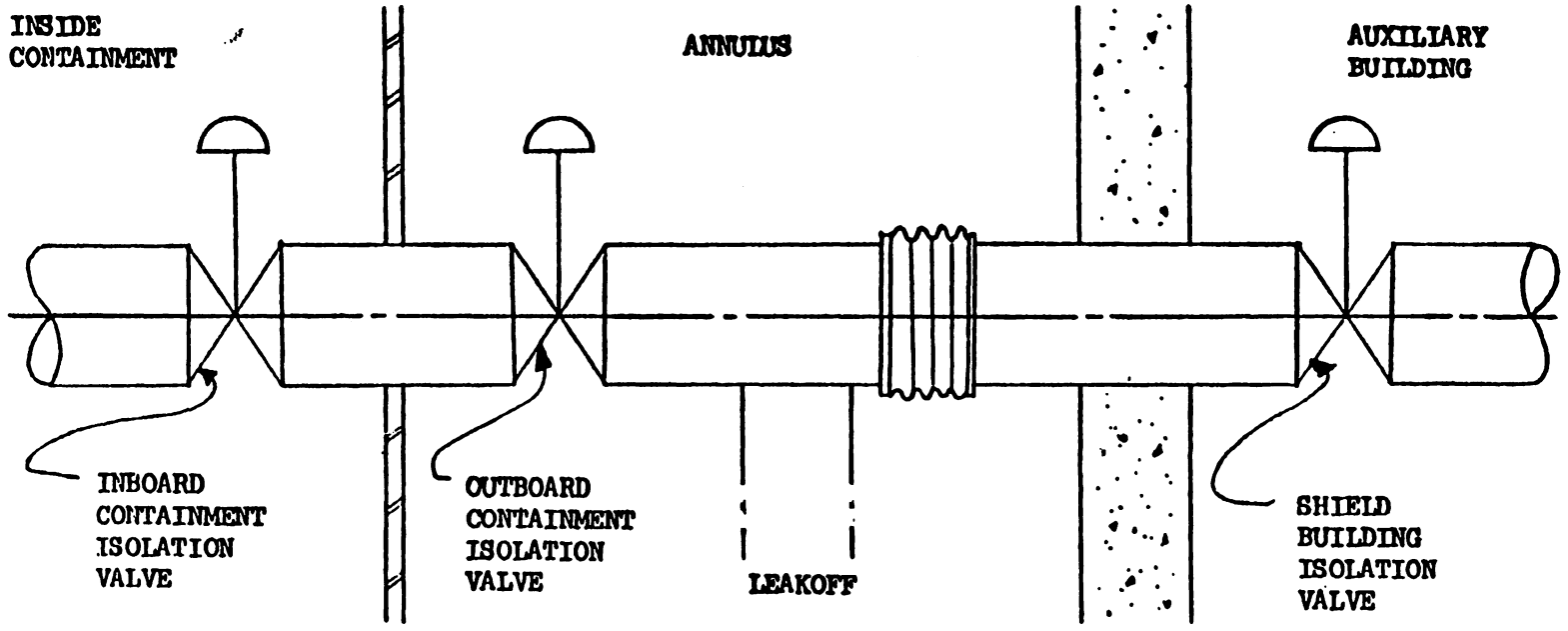

FIGURE 6.2.1-2 Typical Purge Penetration Arrangement

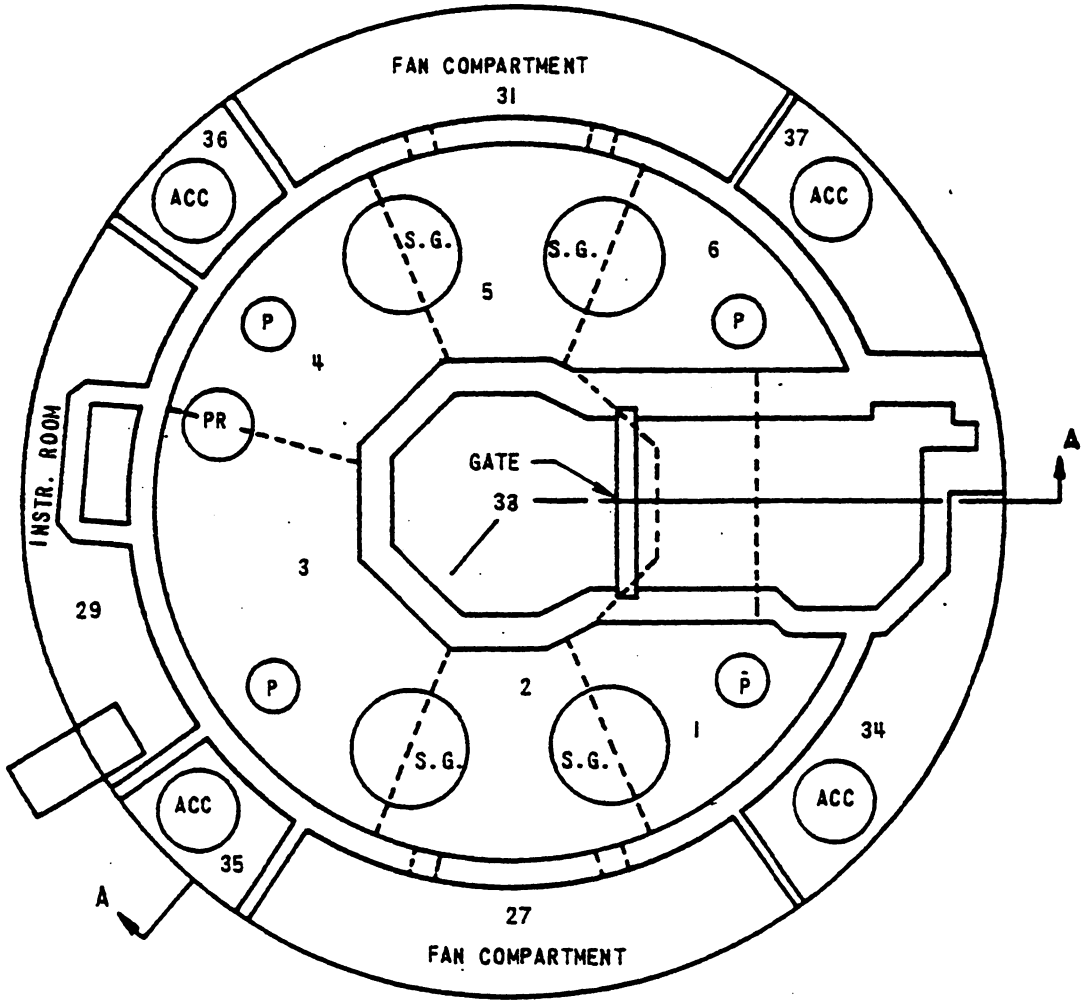

FIGURE 6.2.1-4 Plan at Equipment Rooms Elevation

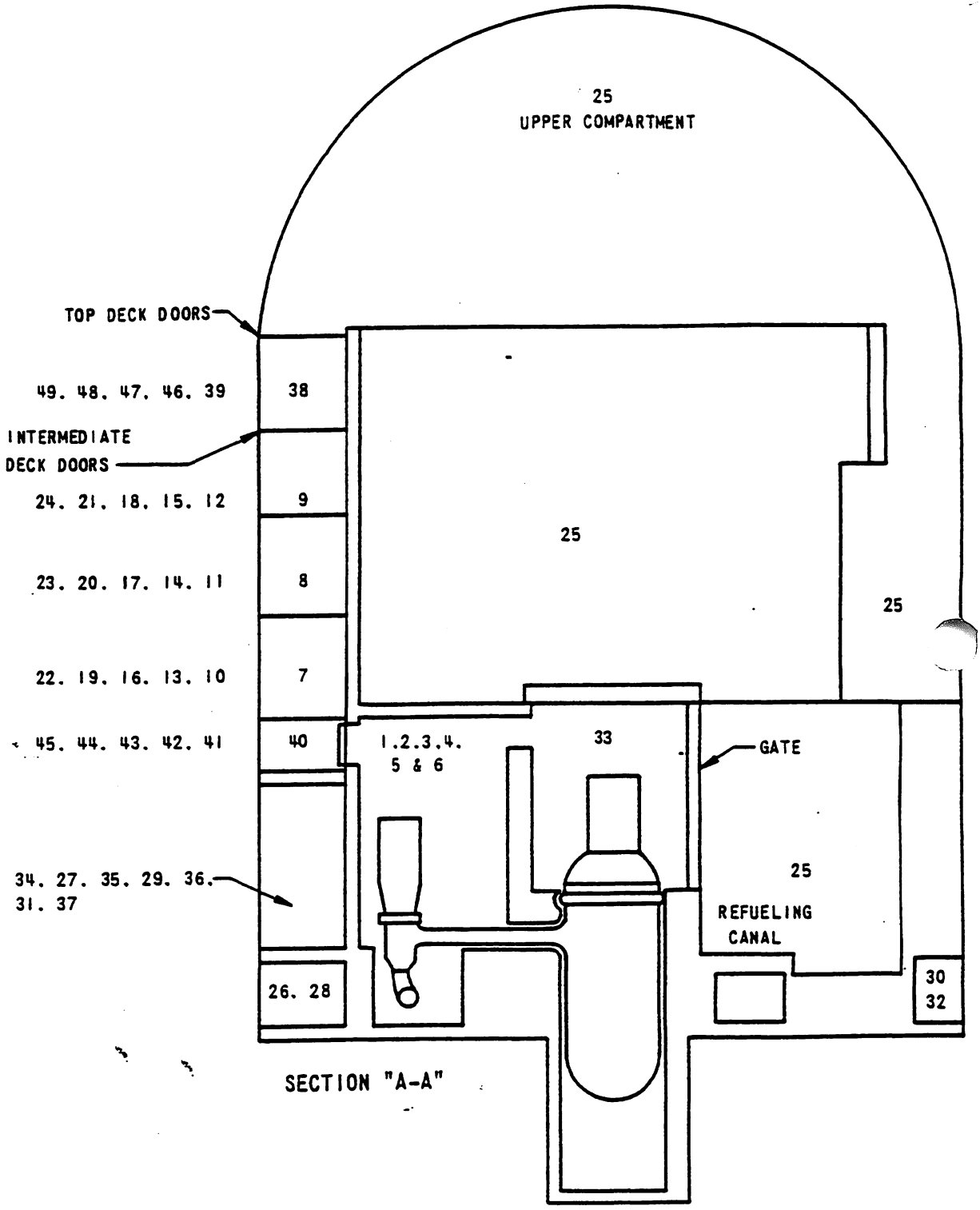

FIGURE 6.2.1-5 Containment Section View

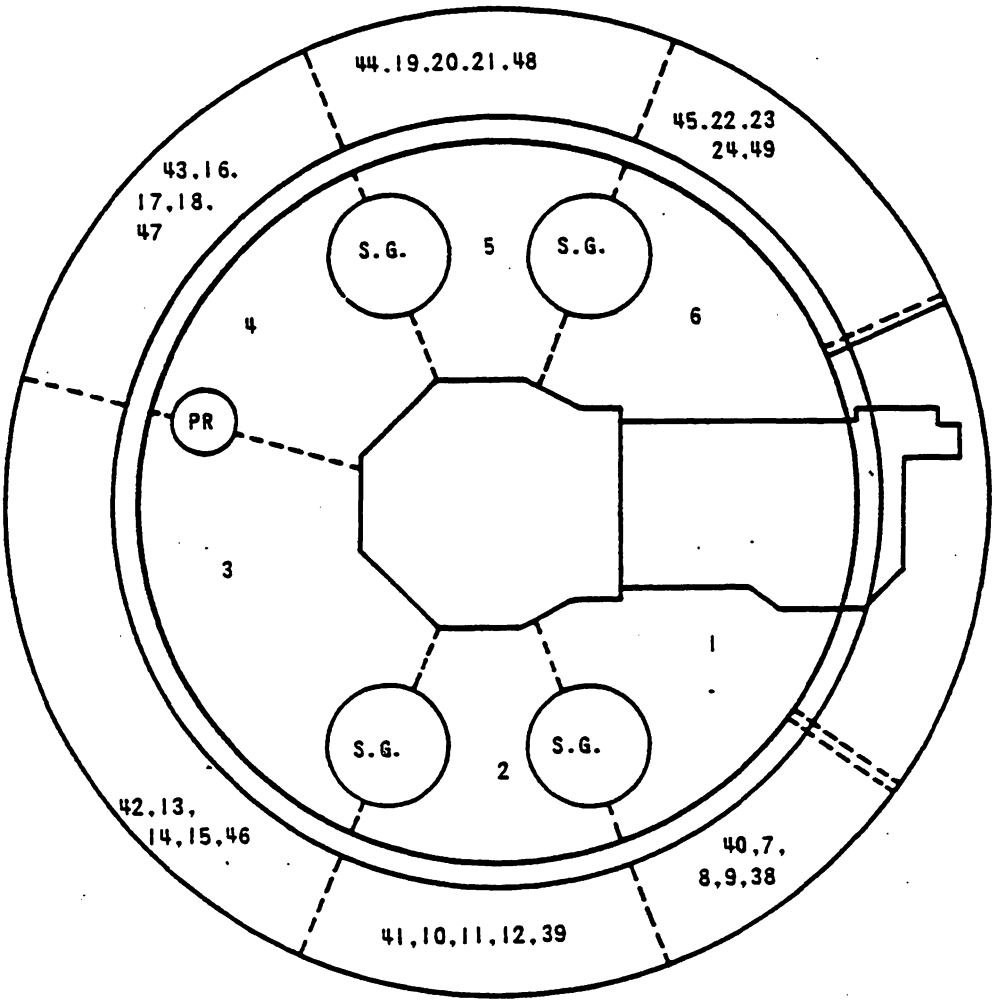

FIGURE 6.2.1-6 Plan View at Ice Condenser Elevation - Ice Condenser Compartments

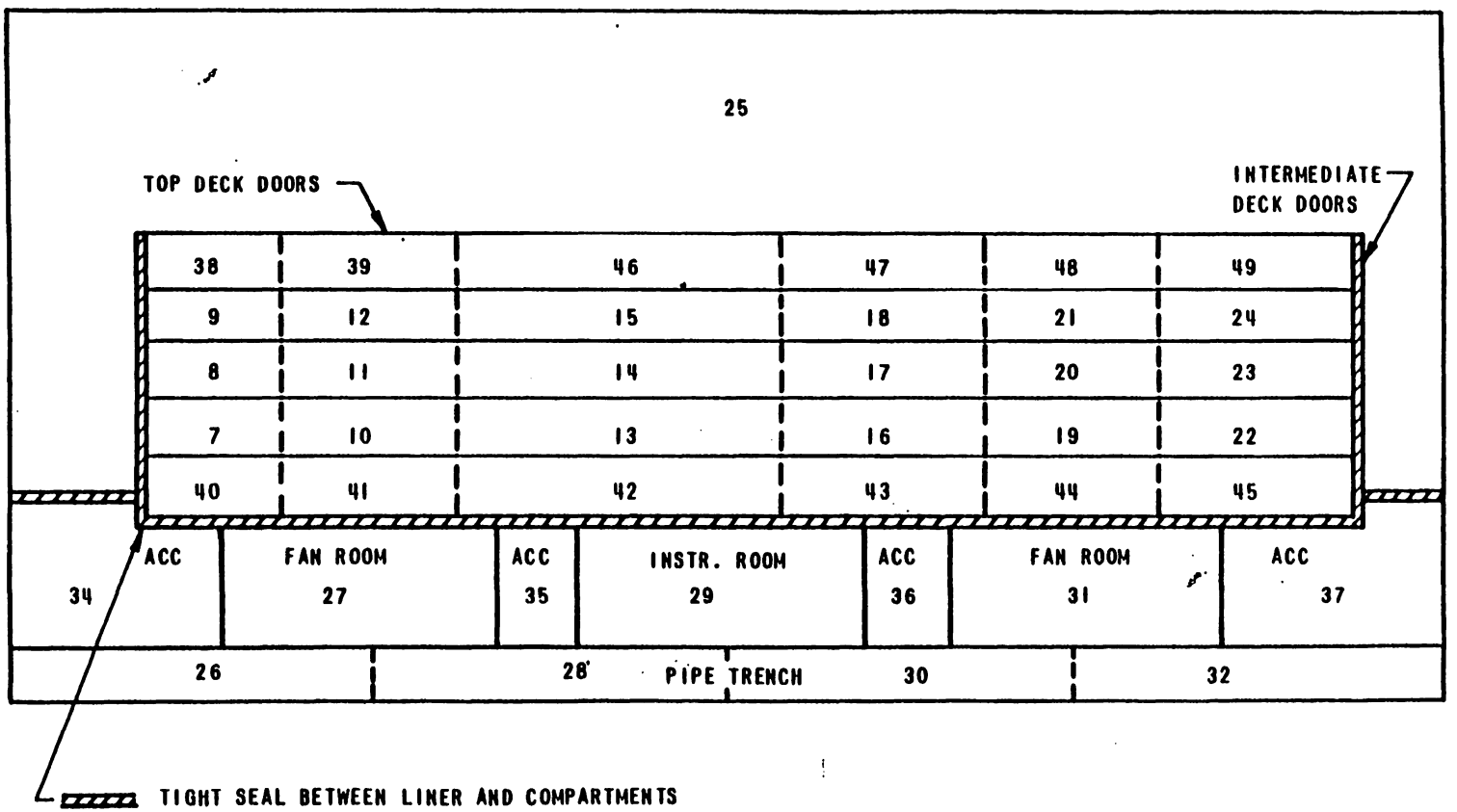

FIGURE 6.2.1-7 Layout of Containment Shell

6370-4

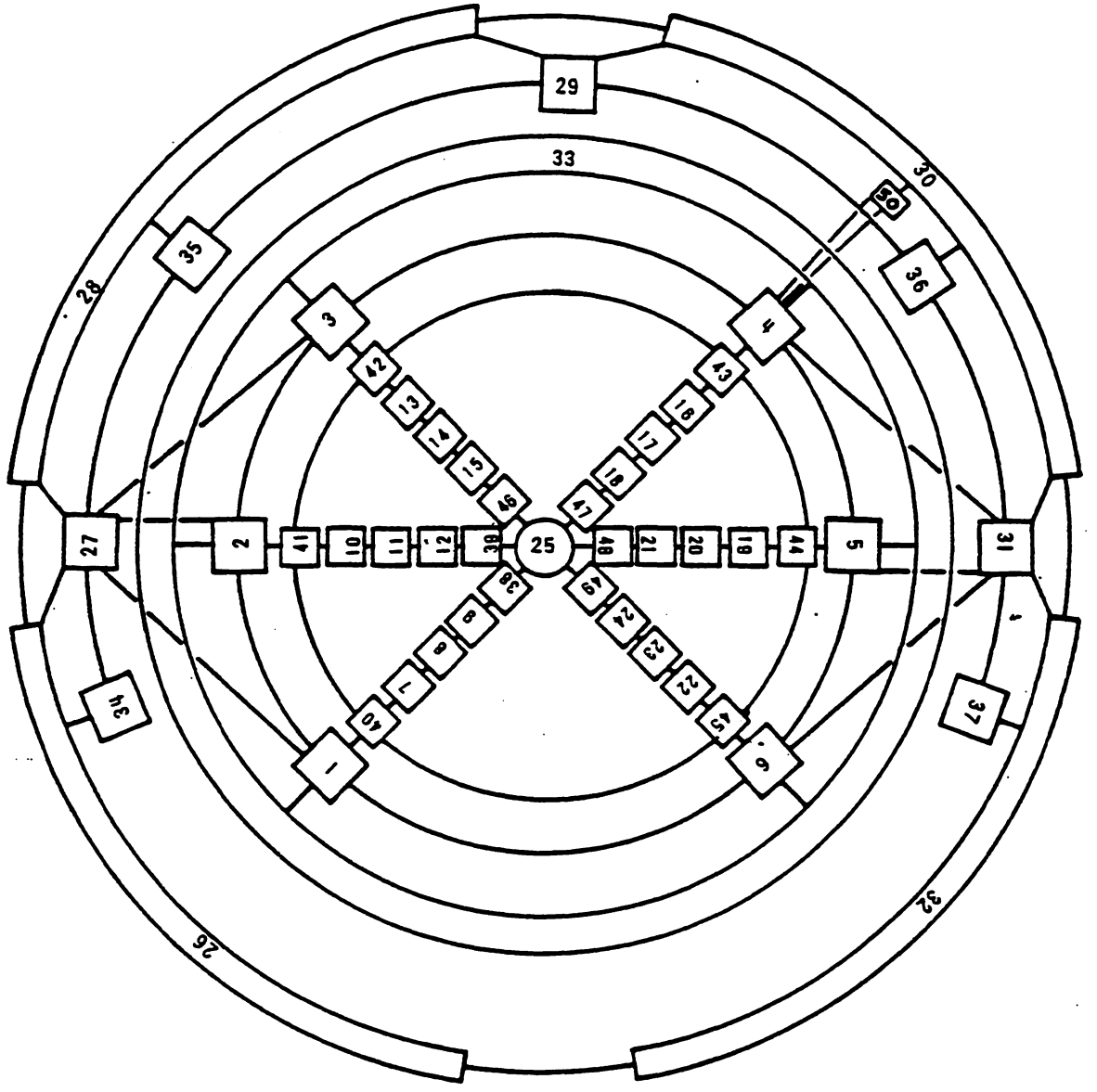

FIGURE 6.2.1-8 TMD Code Network

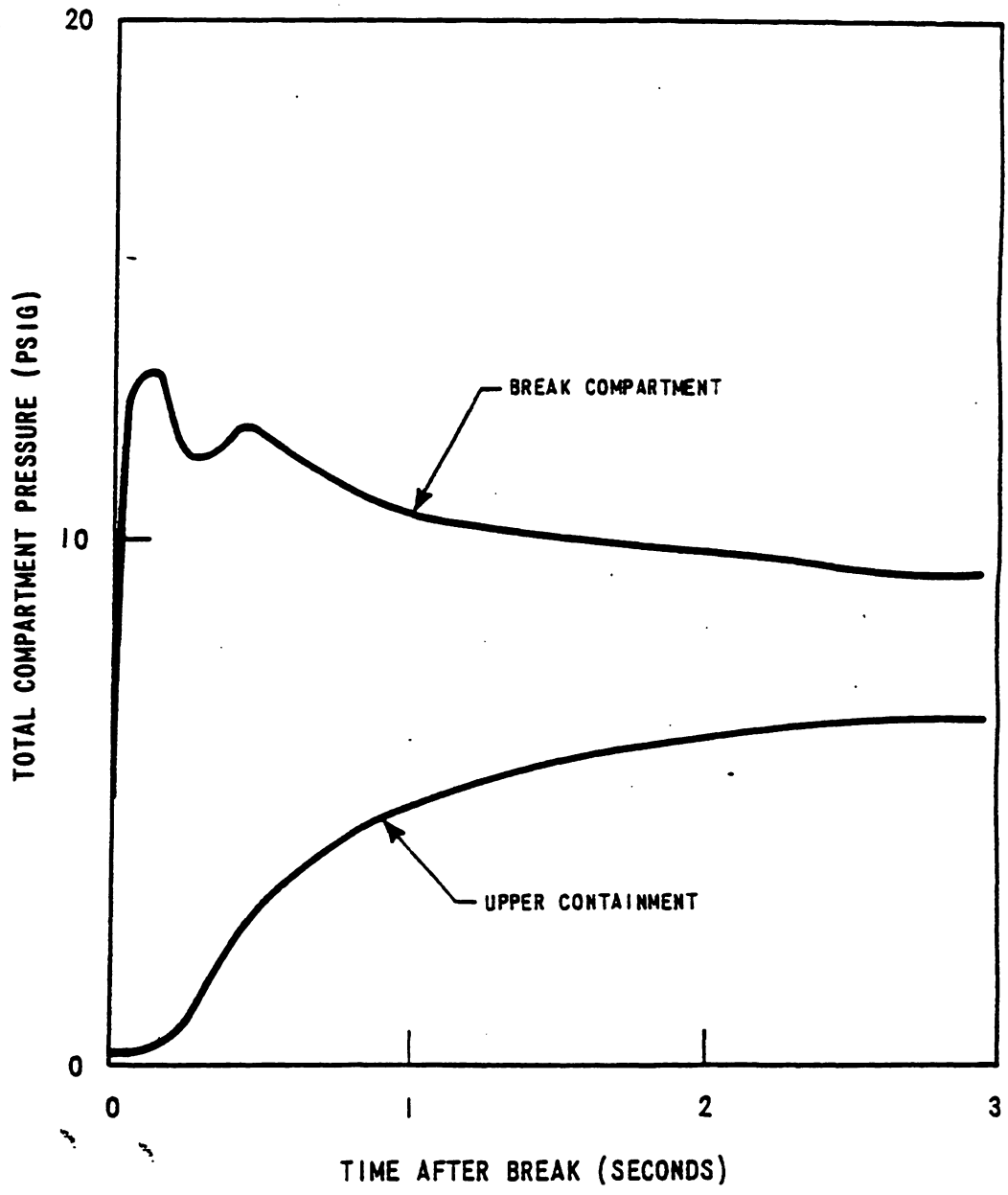

FIGURE 6.2.1-9 **Upper and Lower Compartment Pressure Transient for Worst Case Break Compartment (Element 1) Having a DEHL Break**

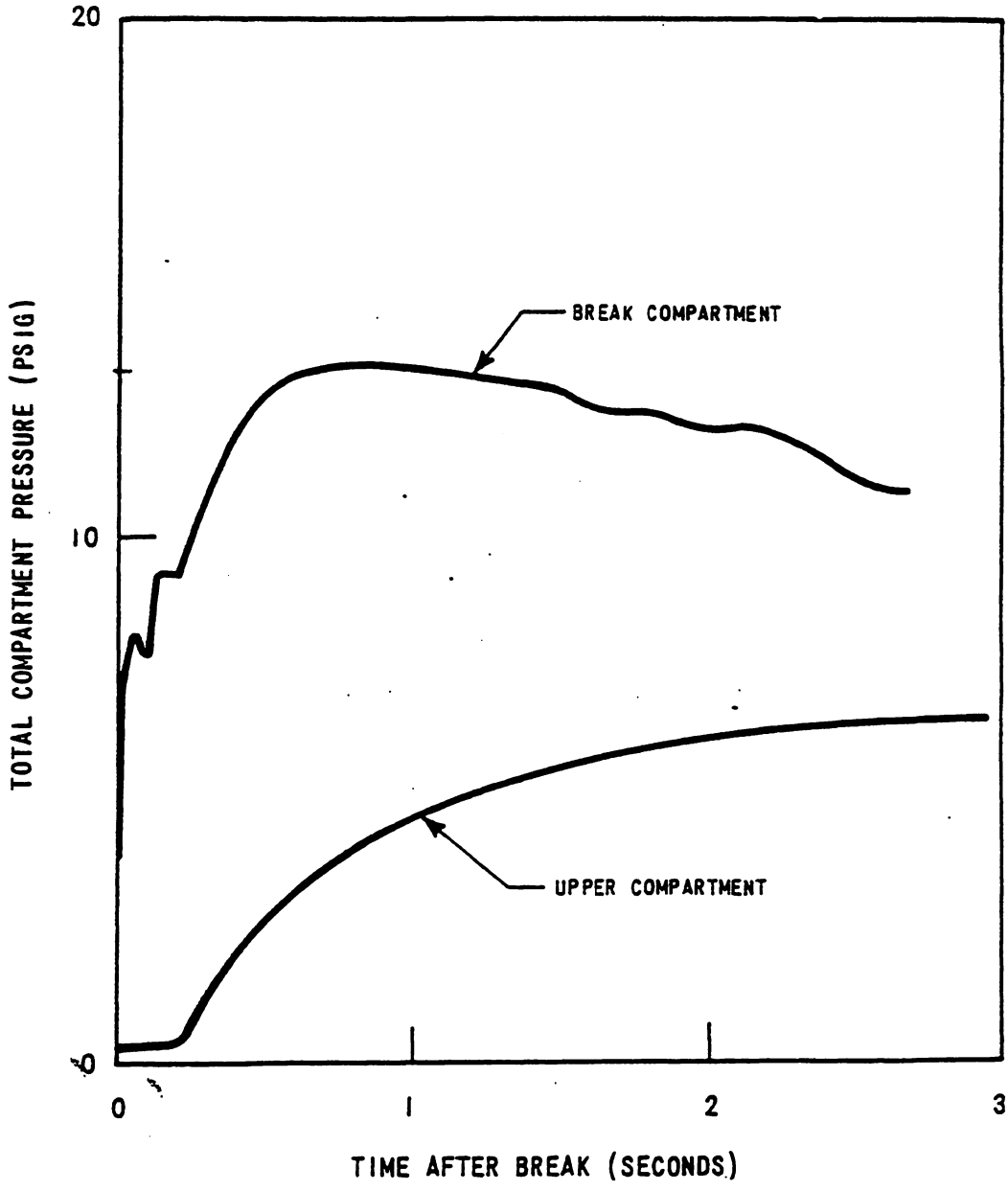

FIGURE 6.2.1-10 **Upper and Lower Compartment Pressure Transient for Worst Case Break Compartment (Element 1) Having a DECL Break**

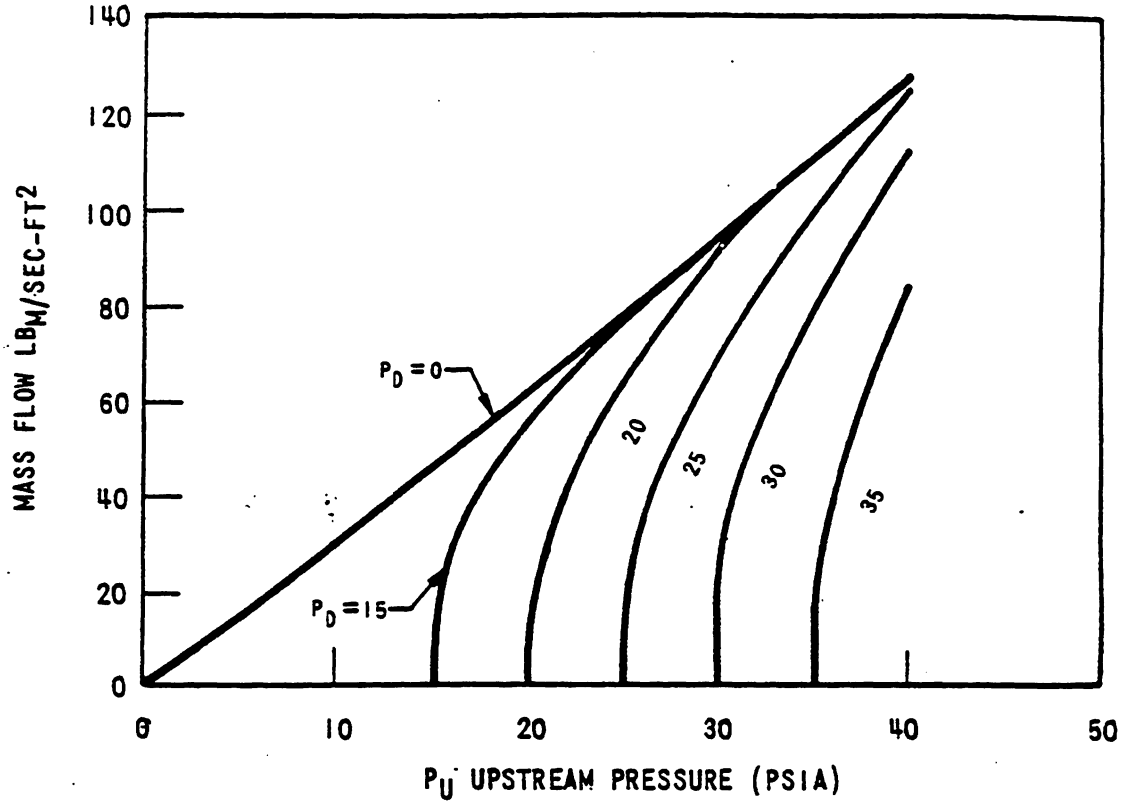

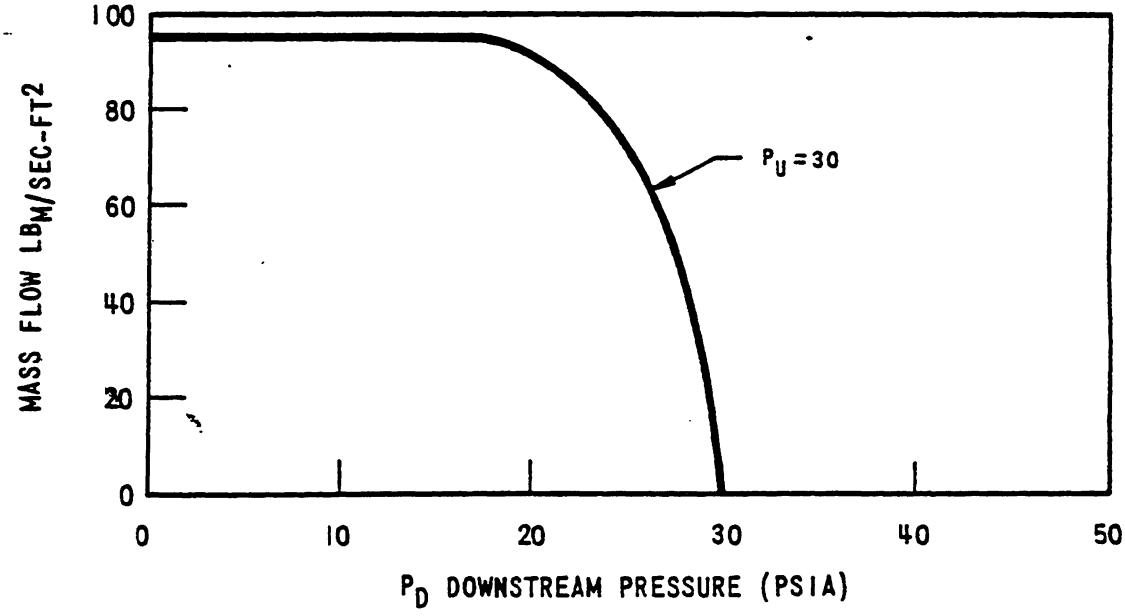

FIGURE 6.2.1-11 Illustration of Choked Flow Characteristics

Best Available Historical Image

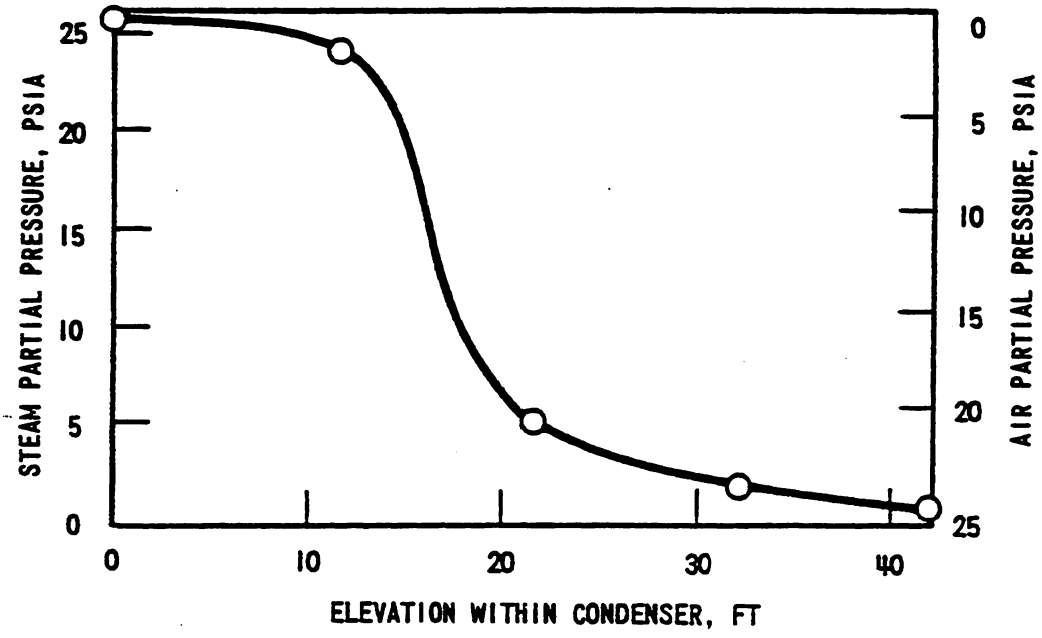

FIGURE 6.2.1-12 Steam Concentration in a Vertical Distribution Channel

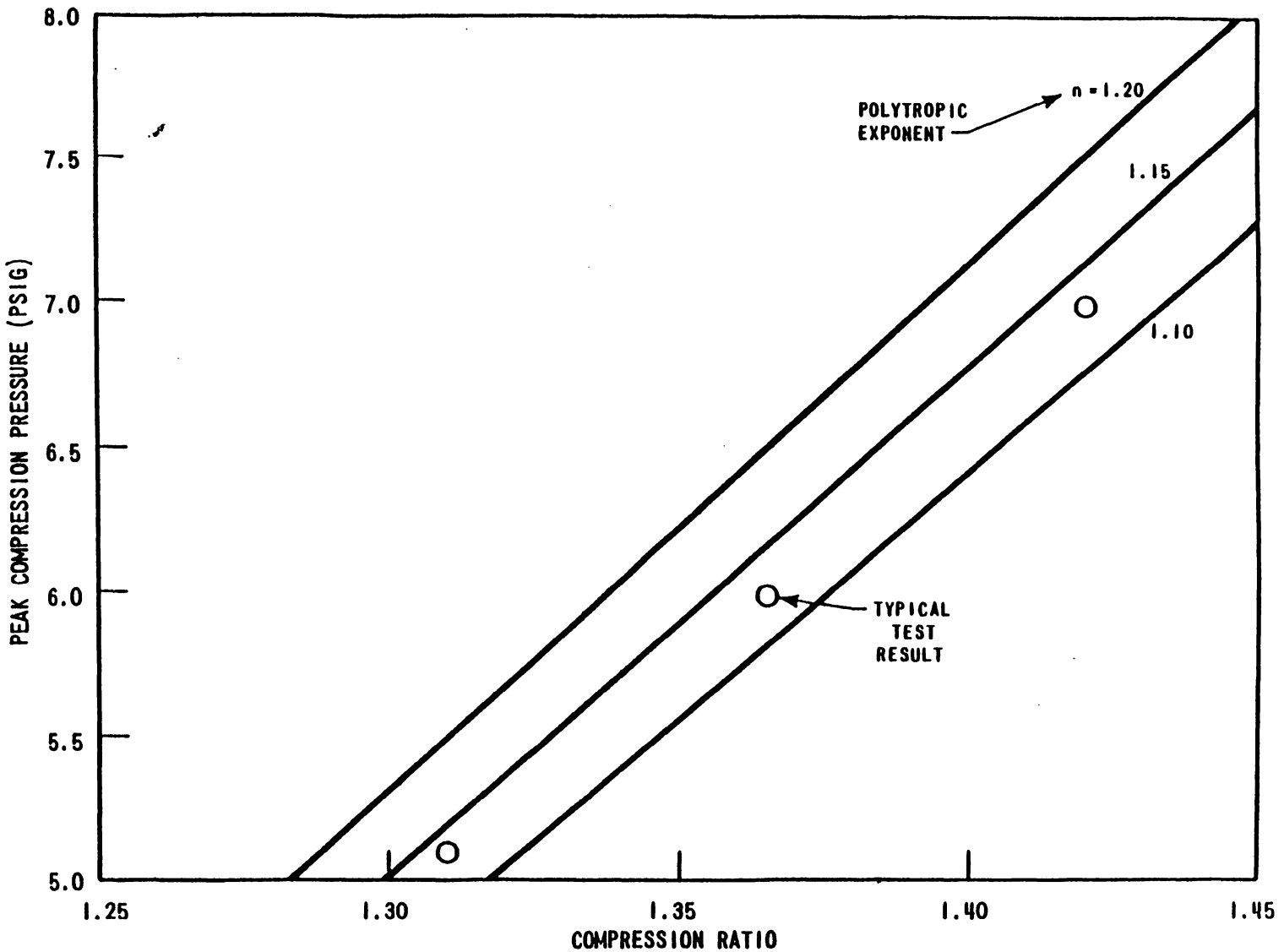

FIGURE 6.2.1-13 Peak Compression Pressure Versus Compression Ratio

6067-5

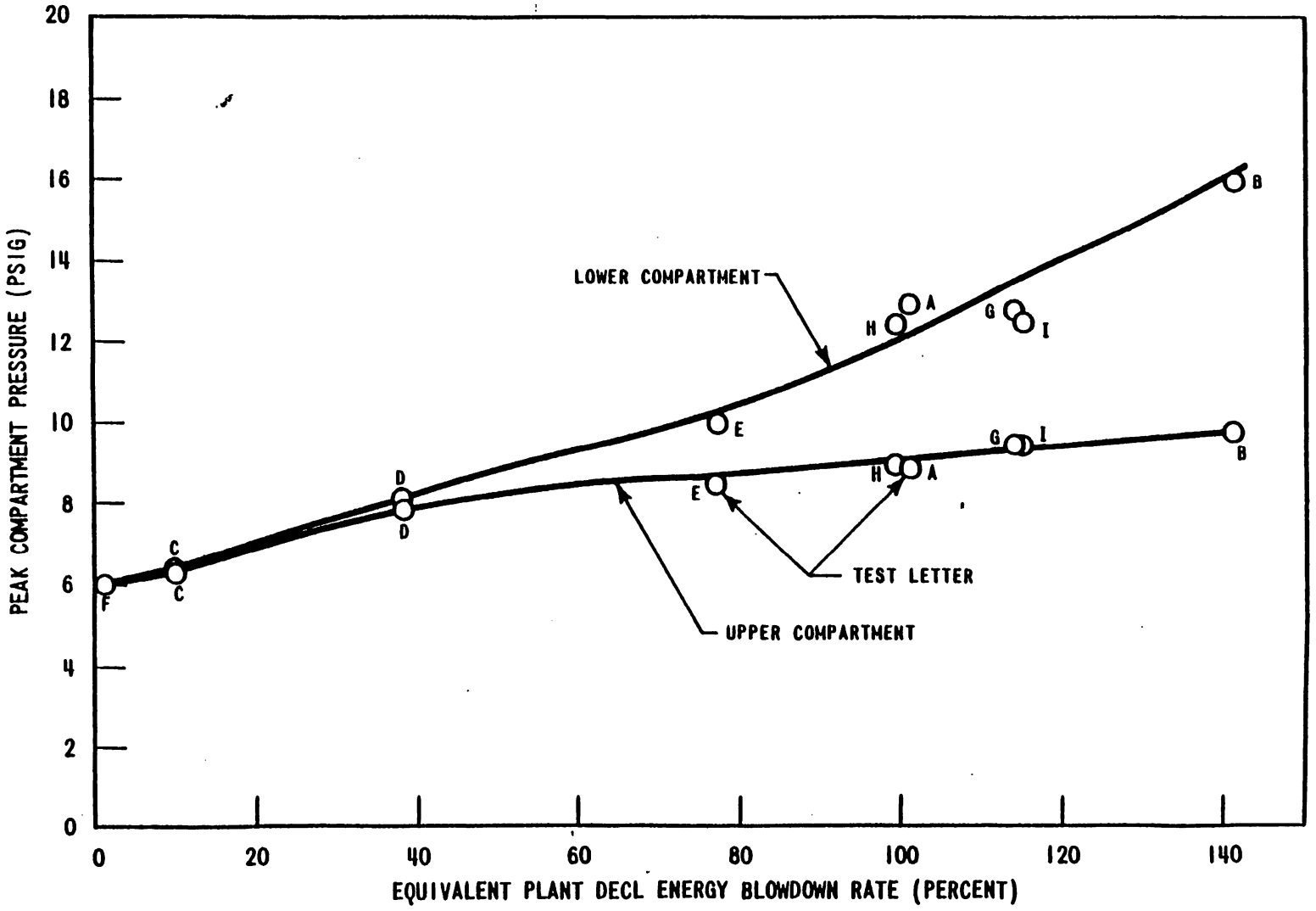

FIGURE 6.2.1- 14 Peak Compartment Pressure versus Blowdown Rate

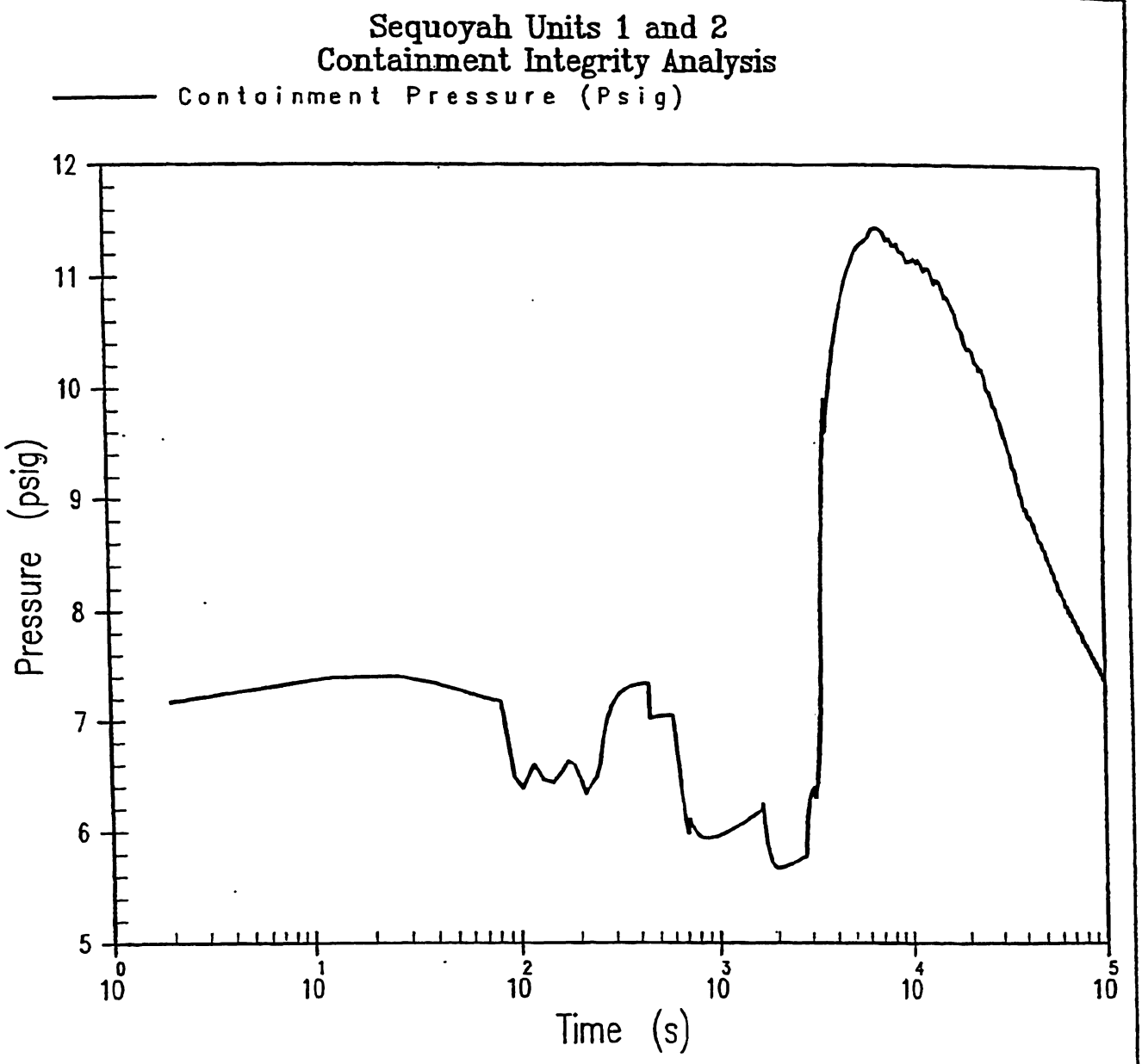

Figure 6.2.1–15

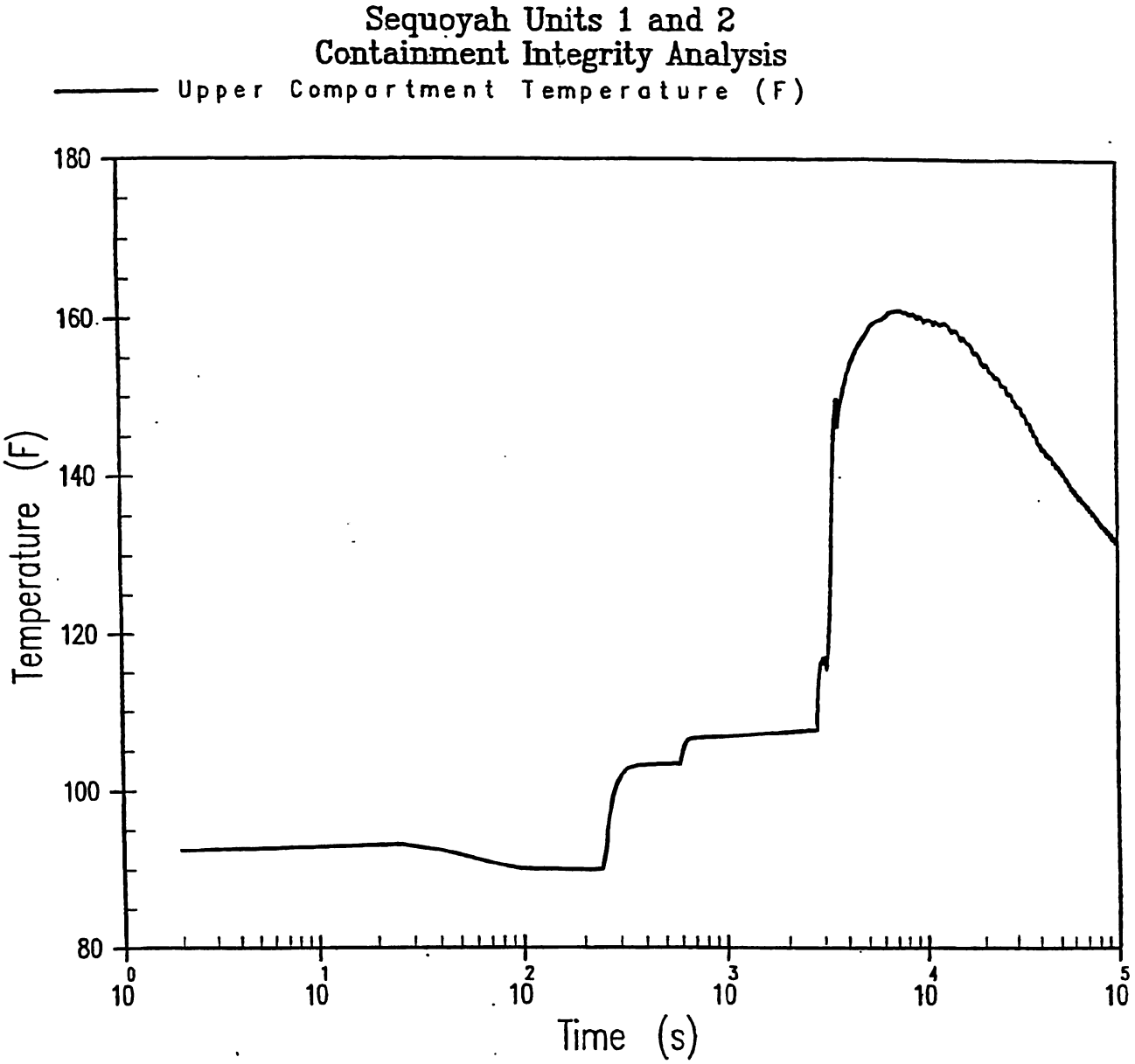

Figure 6.2.1–16 Revised by Amendment 18

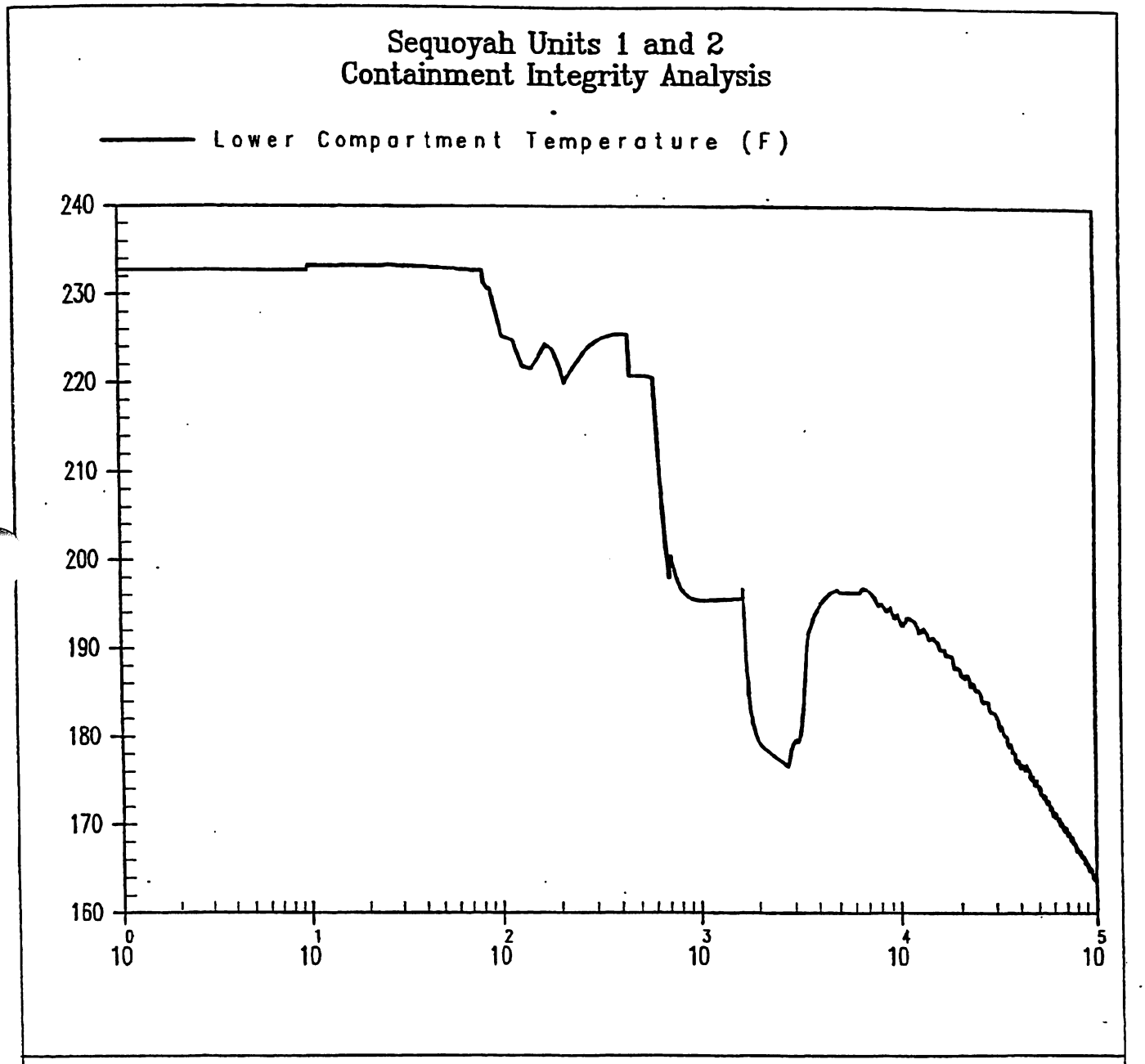

Figure 6.2.1–17

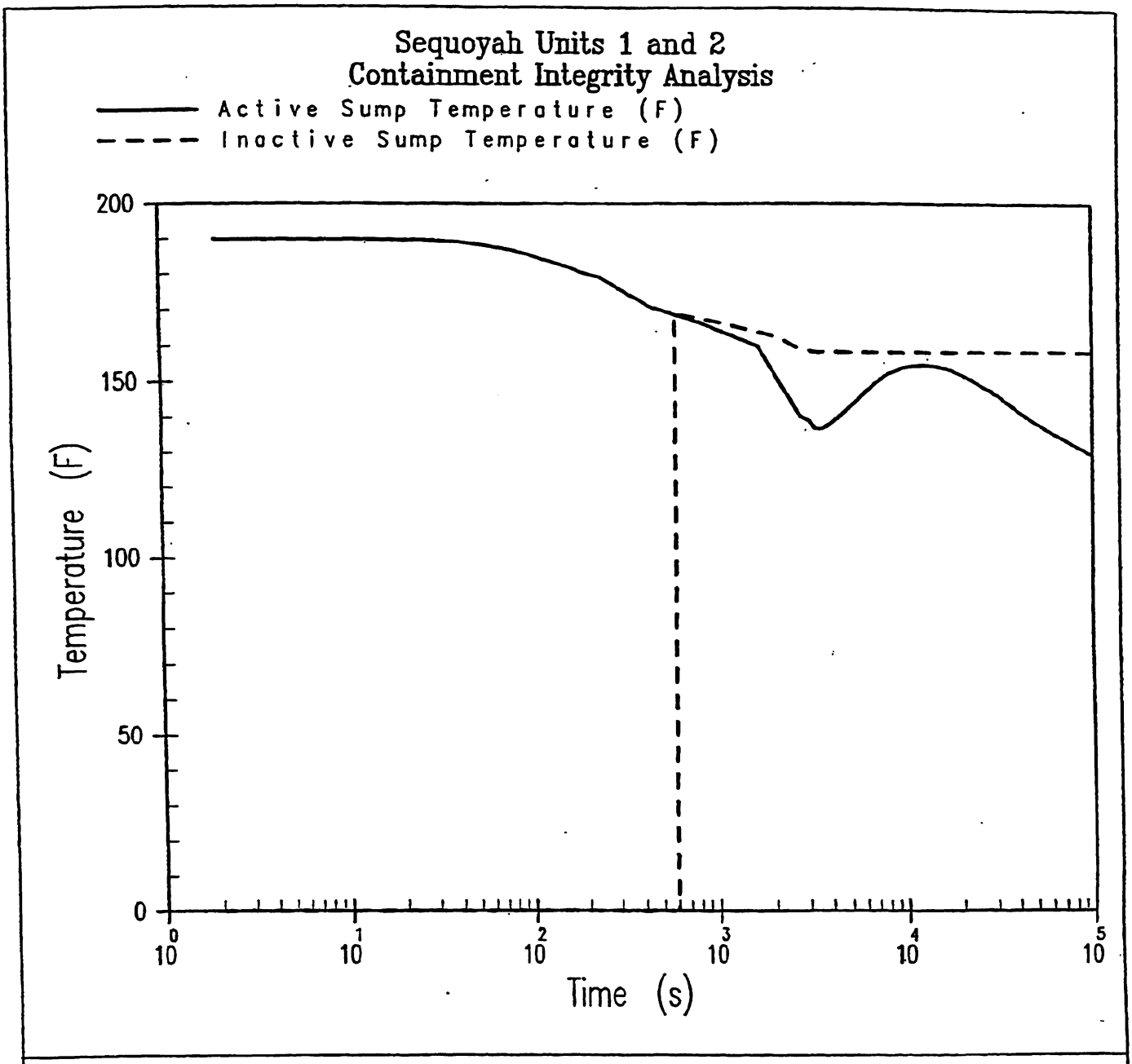

Figure 6.2.1–18 Revised by Amendment 18

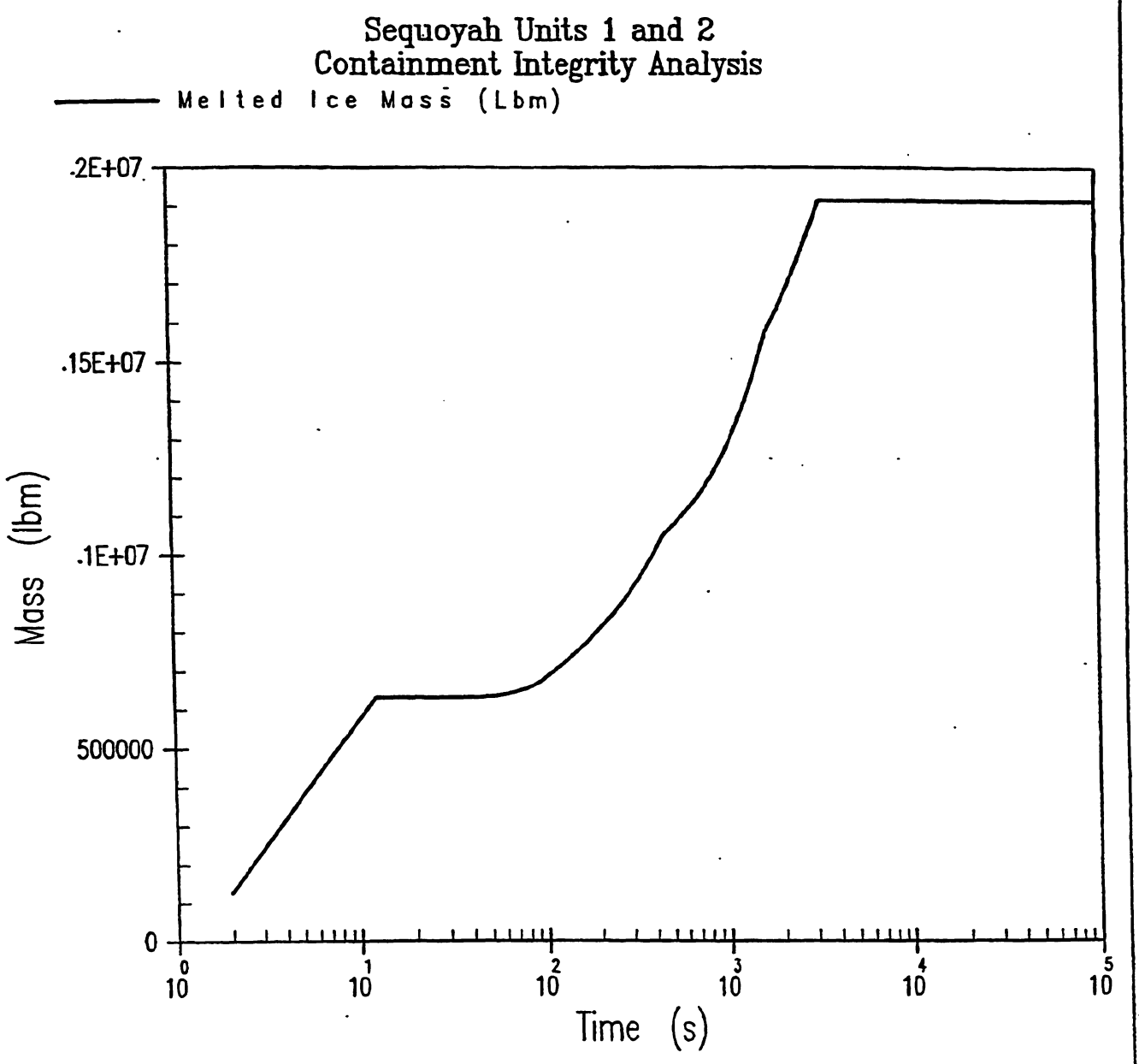

Figure 6.2.1–19 Revised by Amendment 18

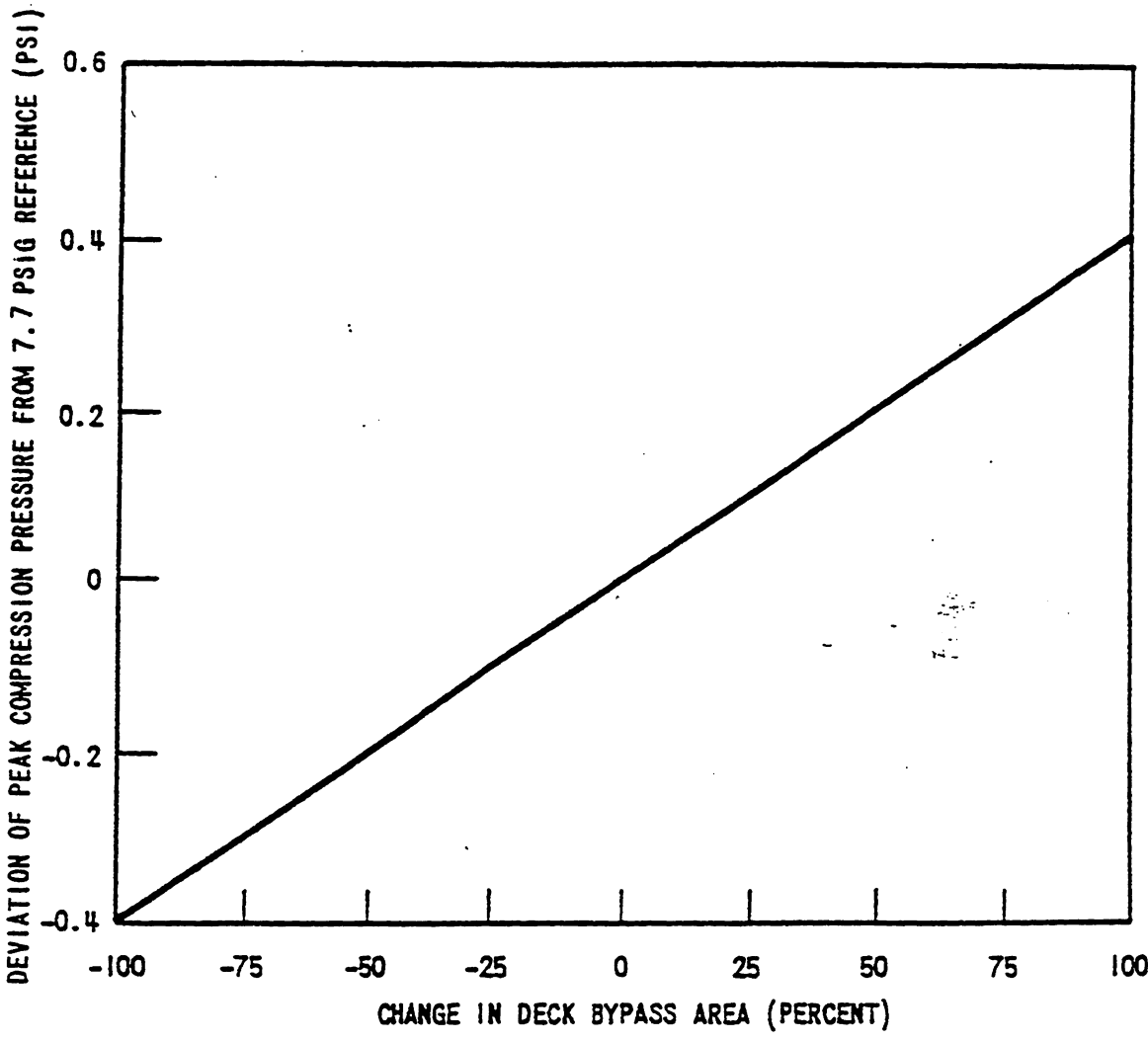

FIGURE 6.2.1-22 Sensitivity of Peak Compression Pressure to Deck Bypass

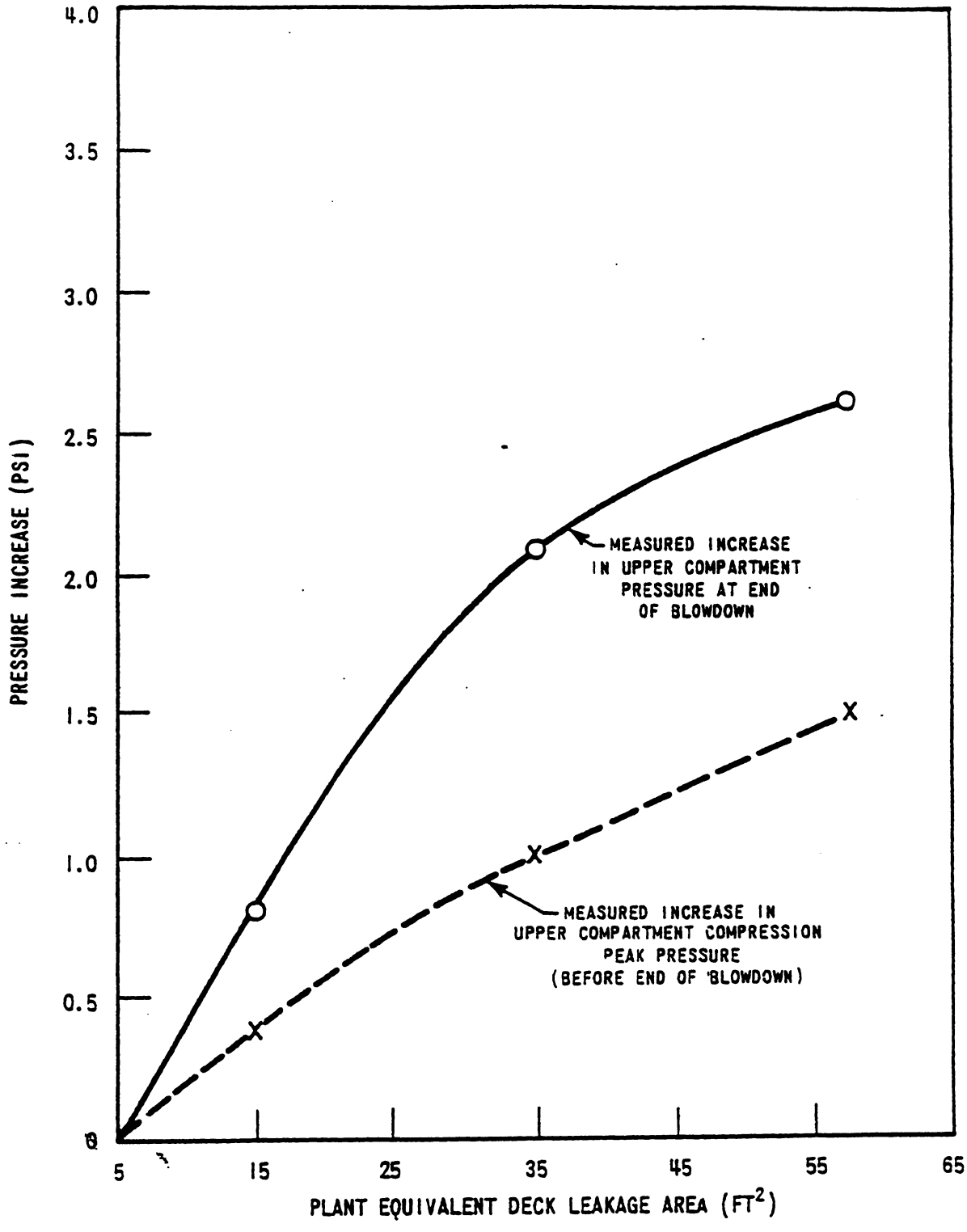

FIGURE 6.2.1-23 Pressure Increase versus Deck Area from Deck Leakage Tests

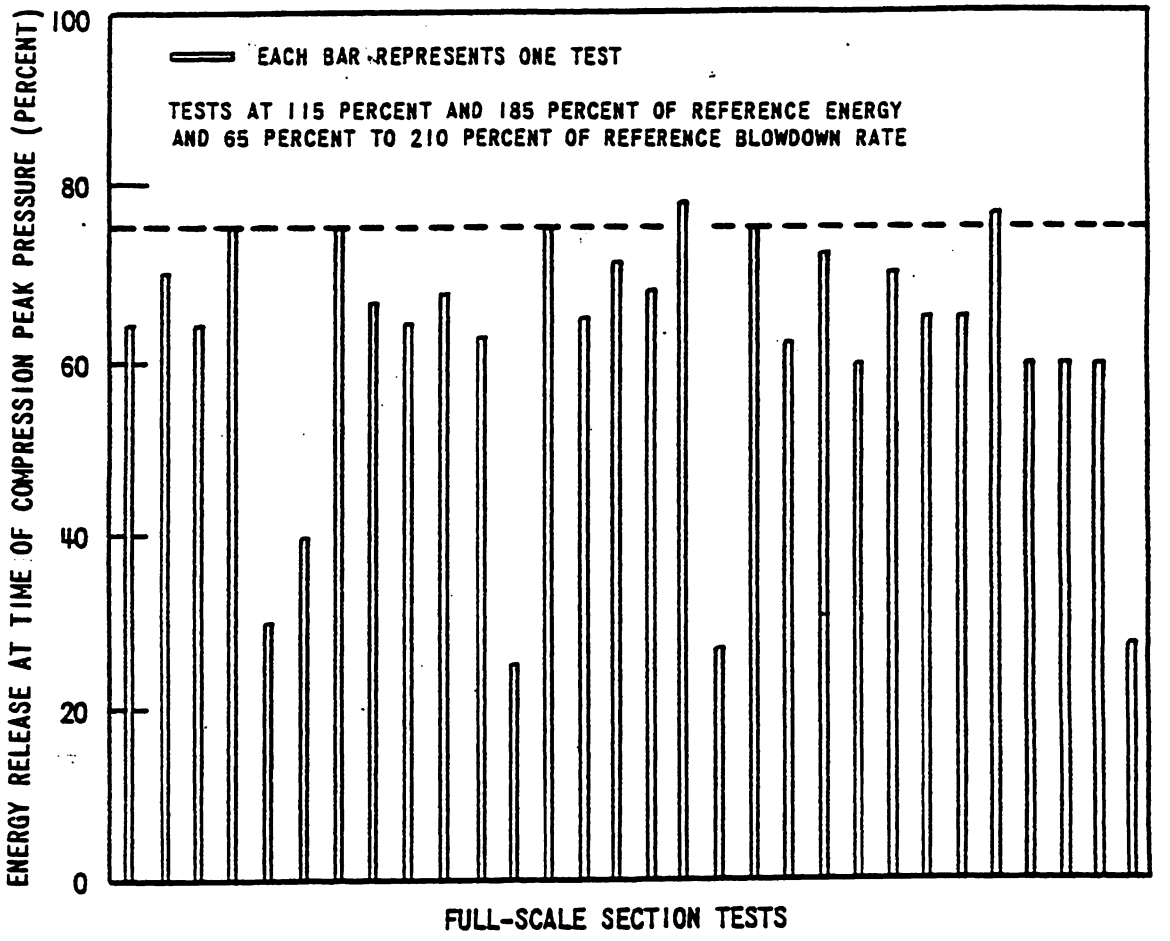

FIGURE 6.2.1-24 Energy Release at Time of Compression Peak Pressure From Full-Scale Section Tests with 1-Foot Diameter Baskets

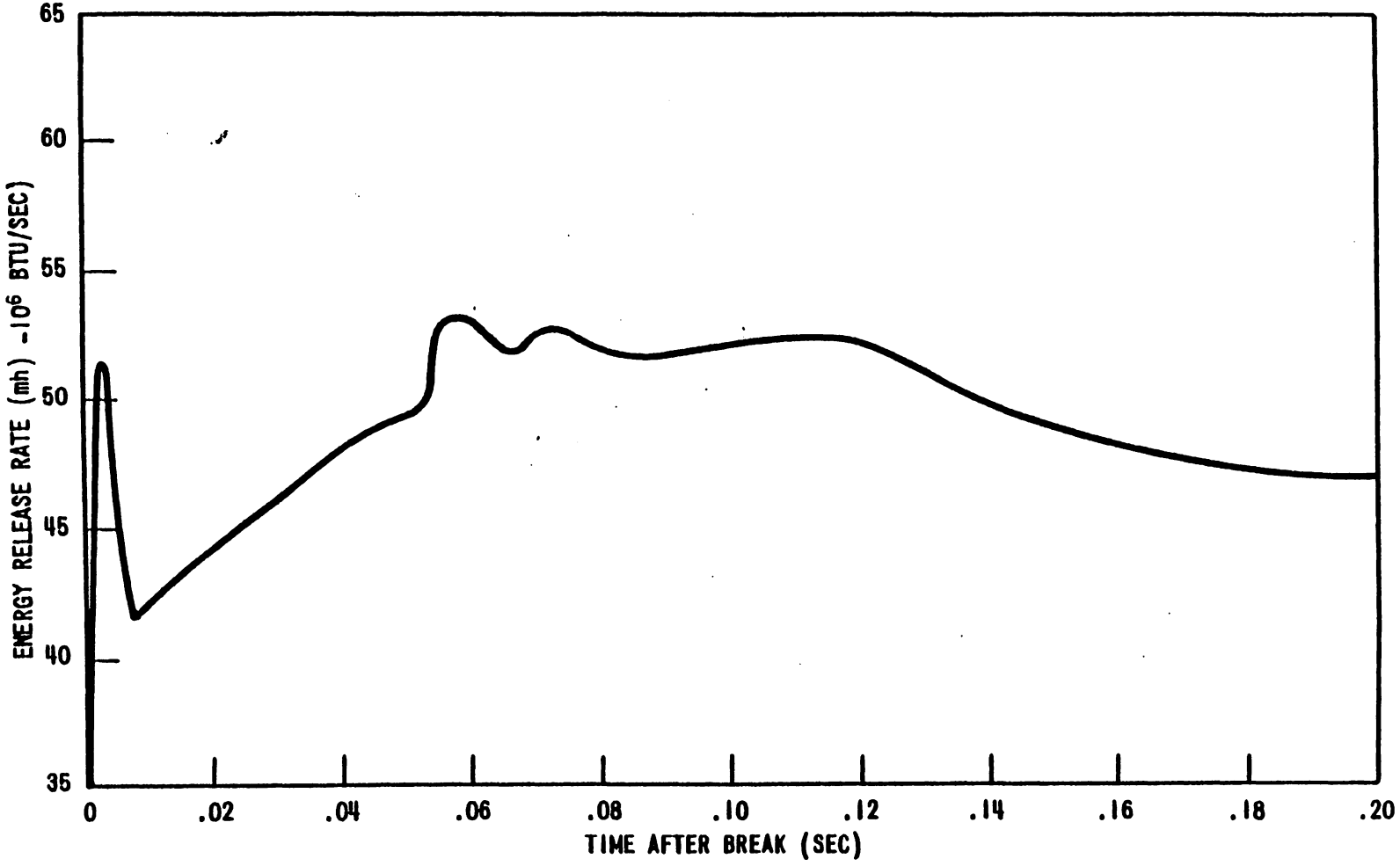

FIGURE 6.2.1-25 **Hot Leg Double Ended Guillotine. Full Power mh Transient**

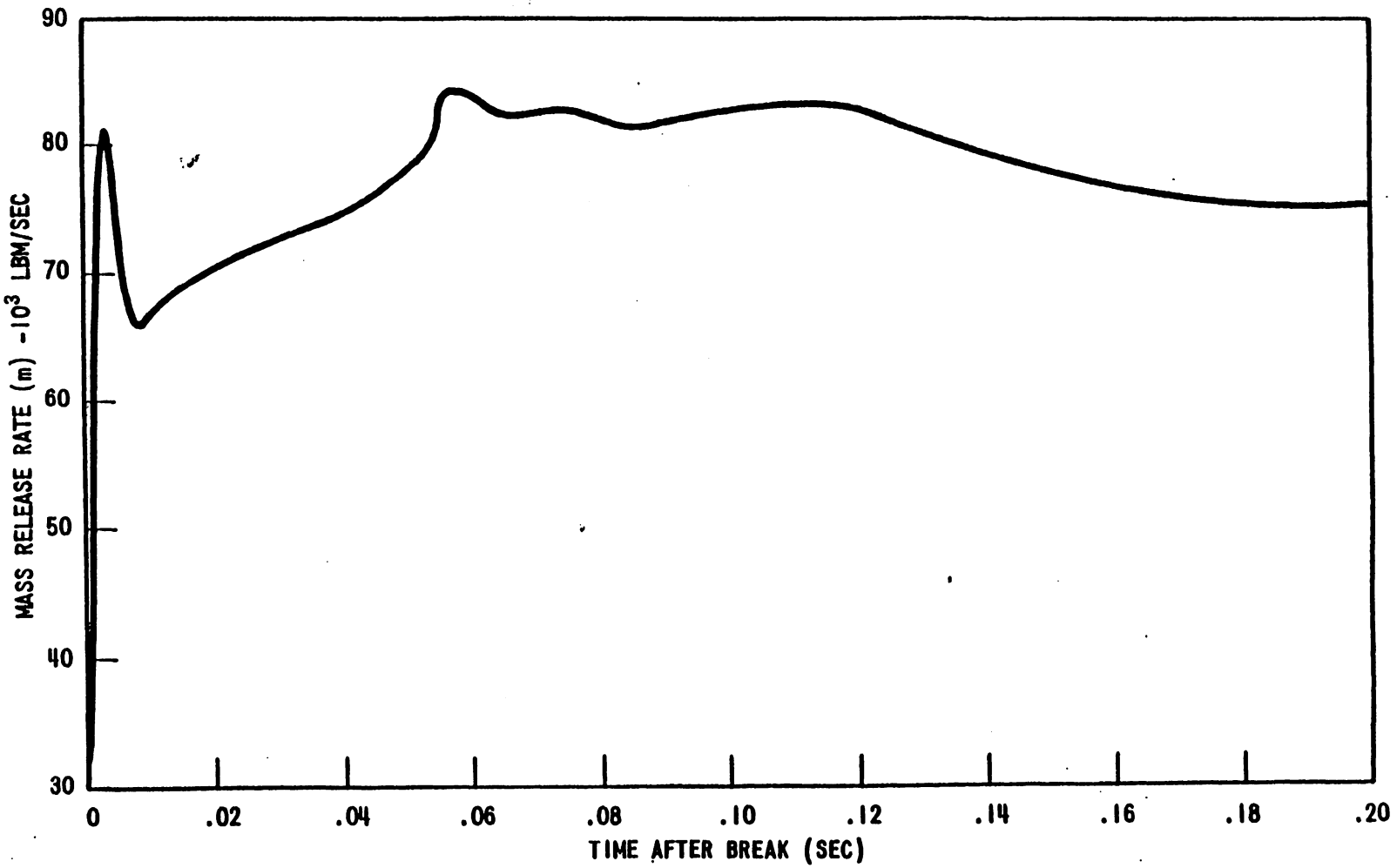

FIGURE 6.2.1-26 Hot Leg Double Ended Guillotine. Full Power m Transient

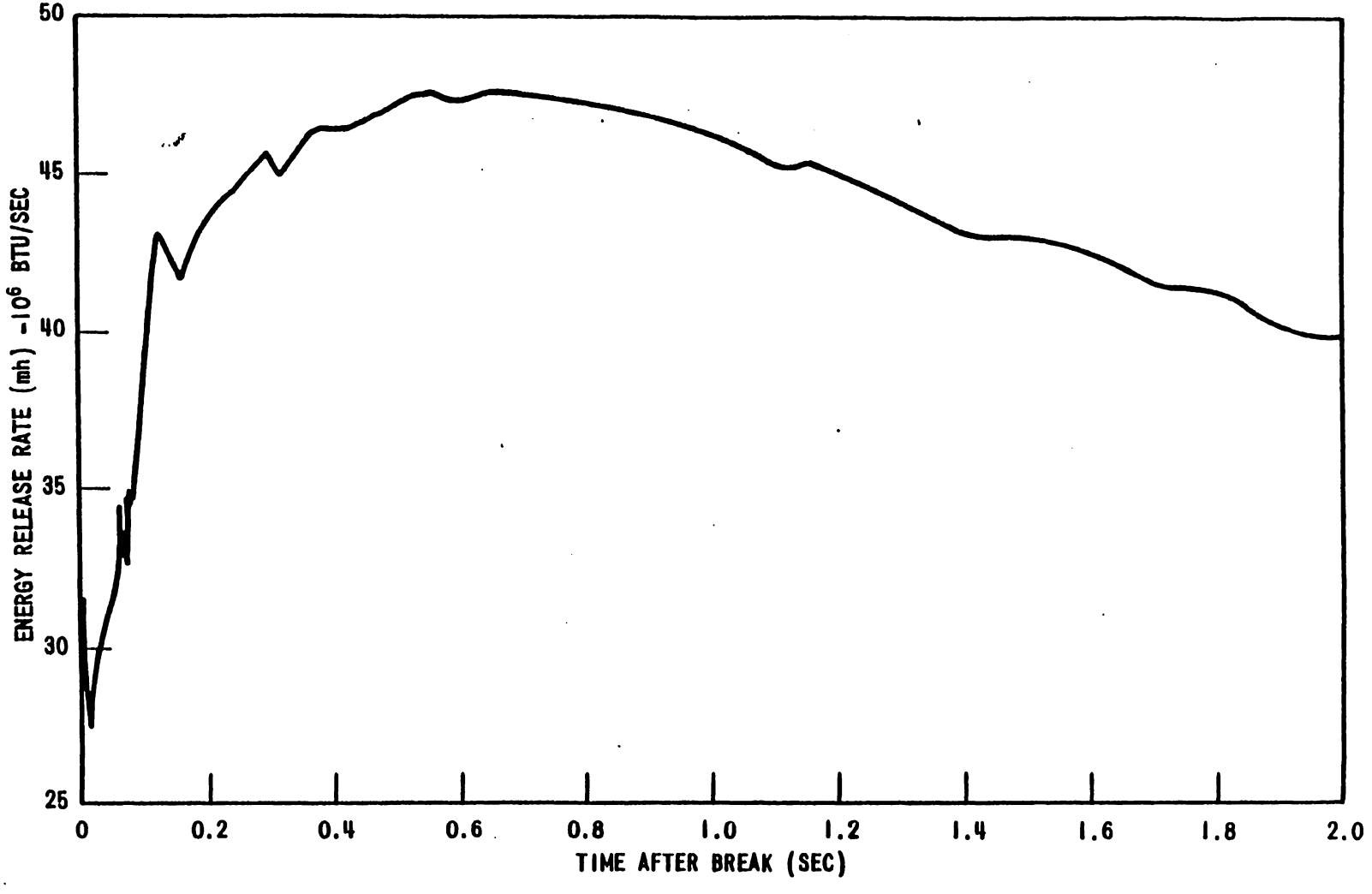

FIGURE 6.2.1-27 **Cold Leg Double Ended Guillotine, mh Transient**

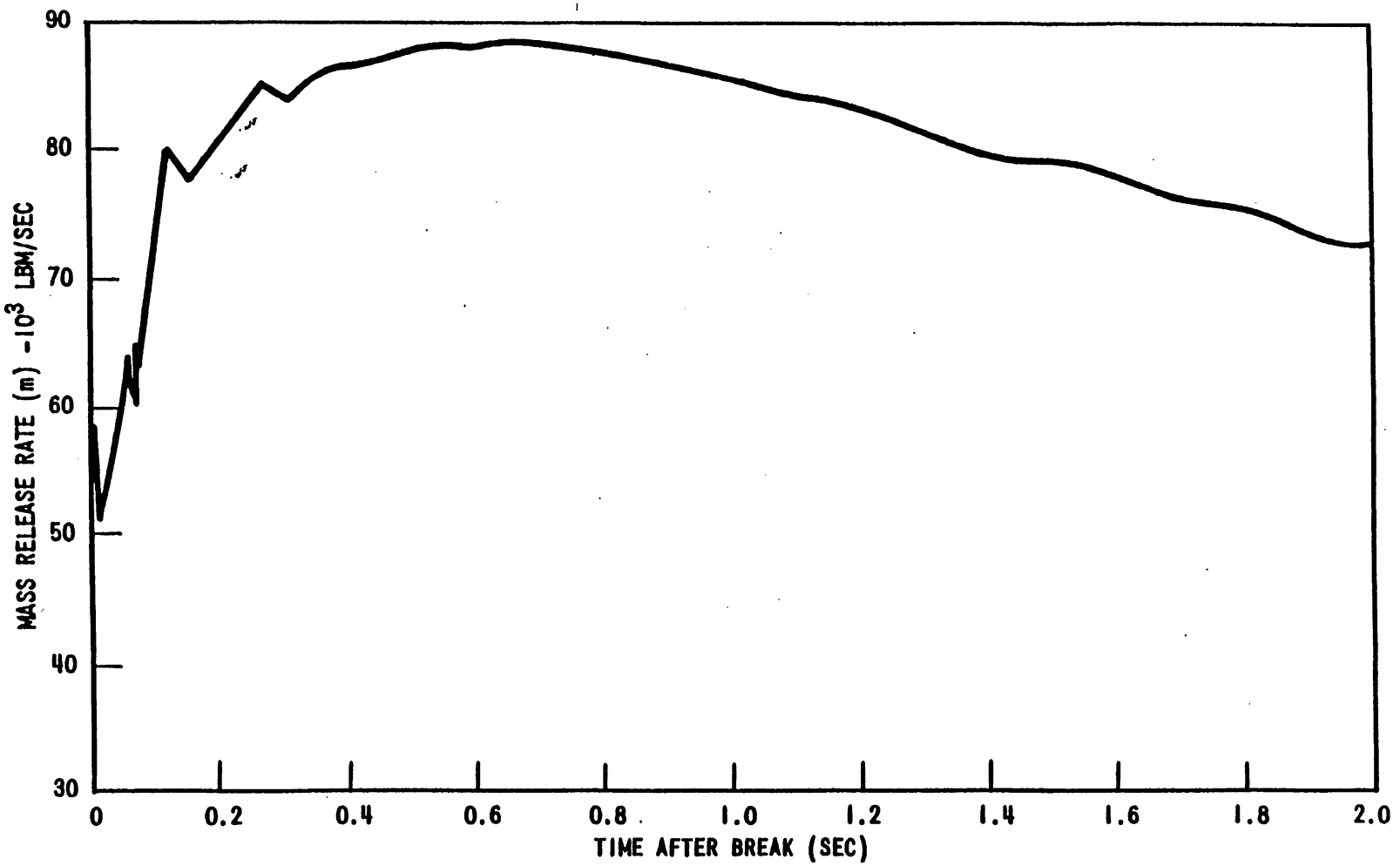

FIGURE 6.2.1-28 **Cold Leg Double Ended Guillotine, m Transient**

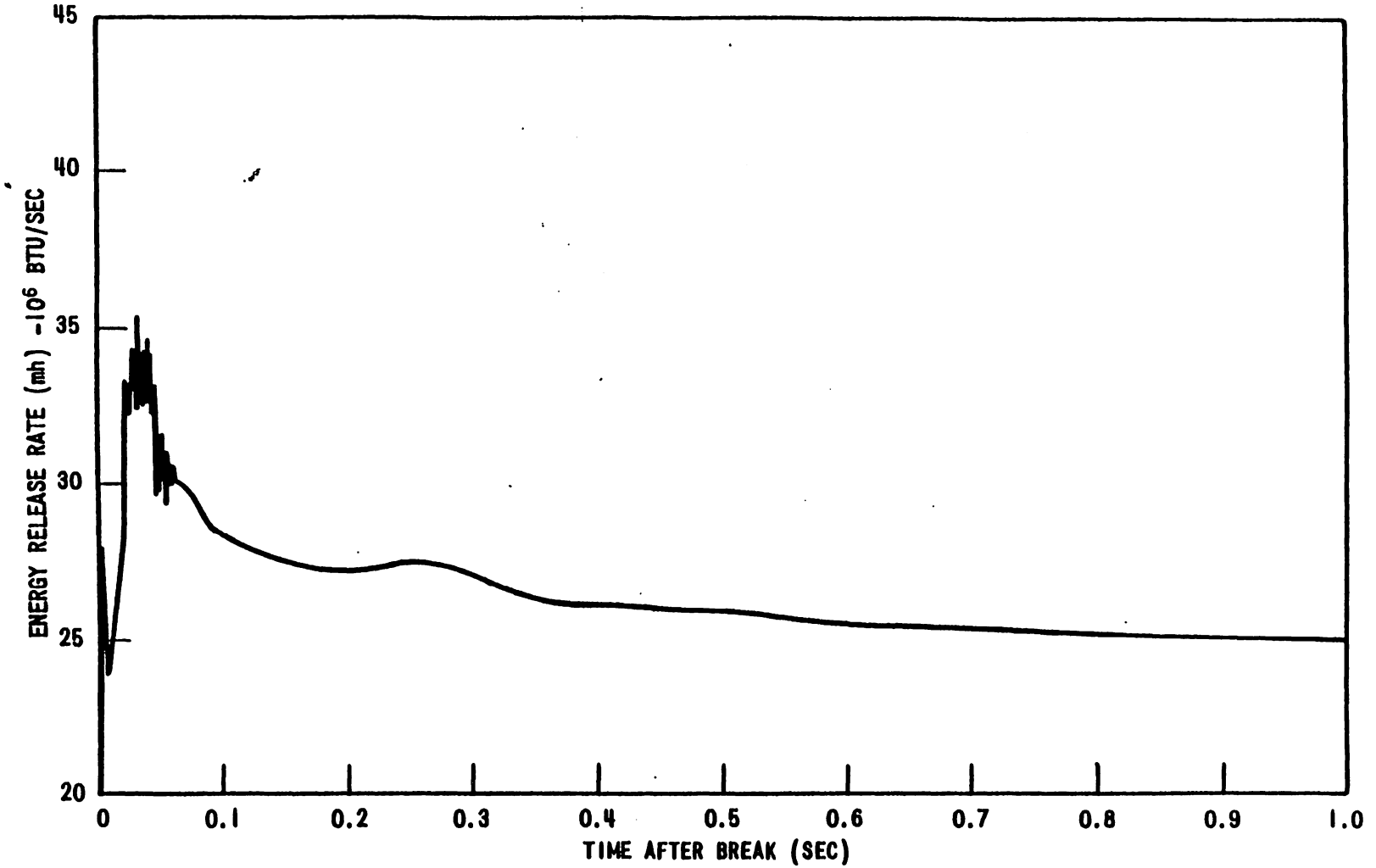

FIGURE 6.2.1-29 **Hot Leg Single Ended Split, mh Transient**

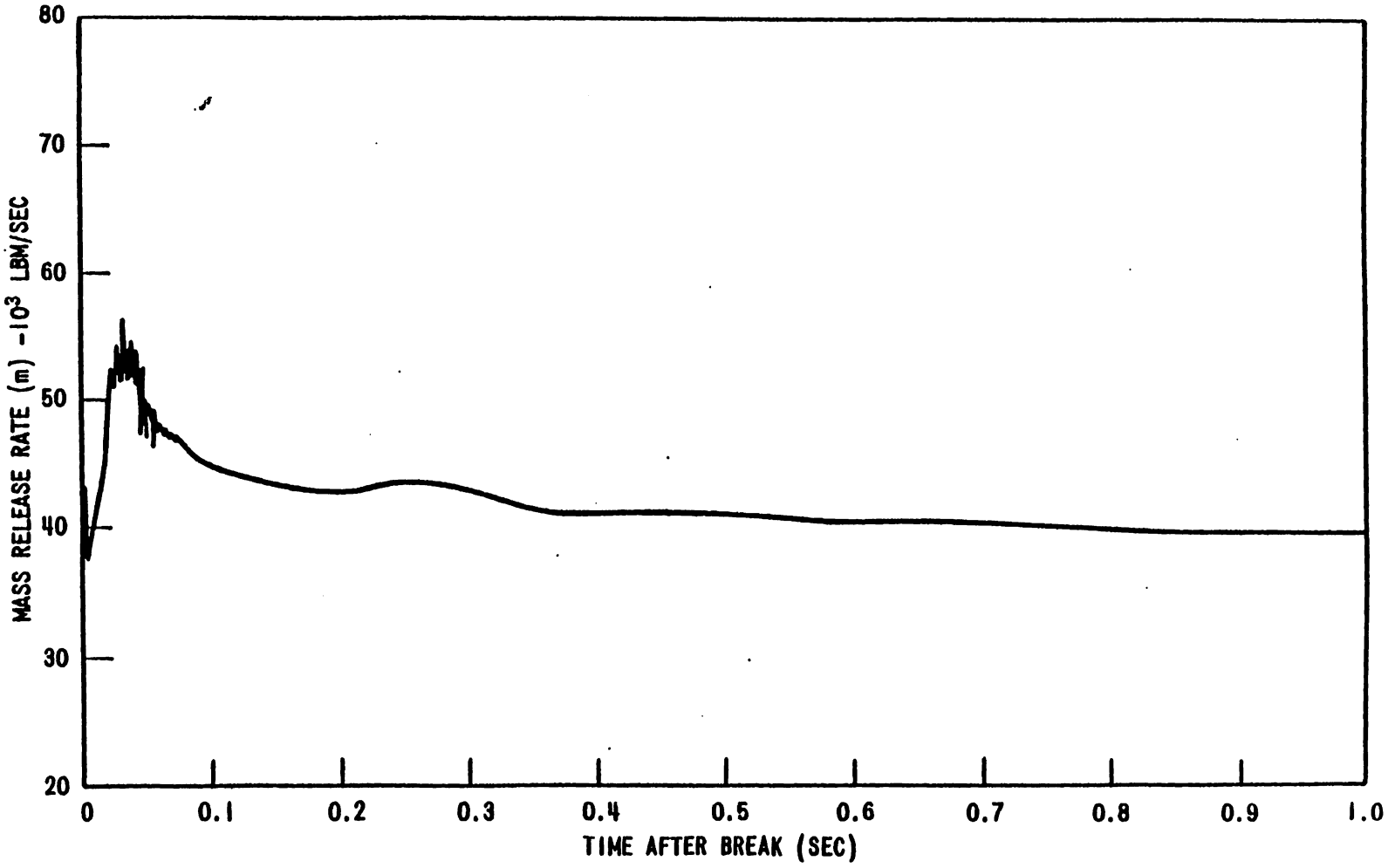

FIGURE 6.2.1-30 **Hot Leg Single Ended Split, m Transient**

Best Available Historical Image

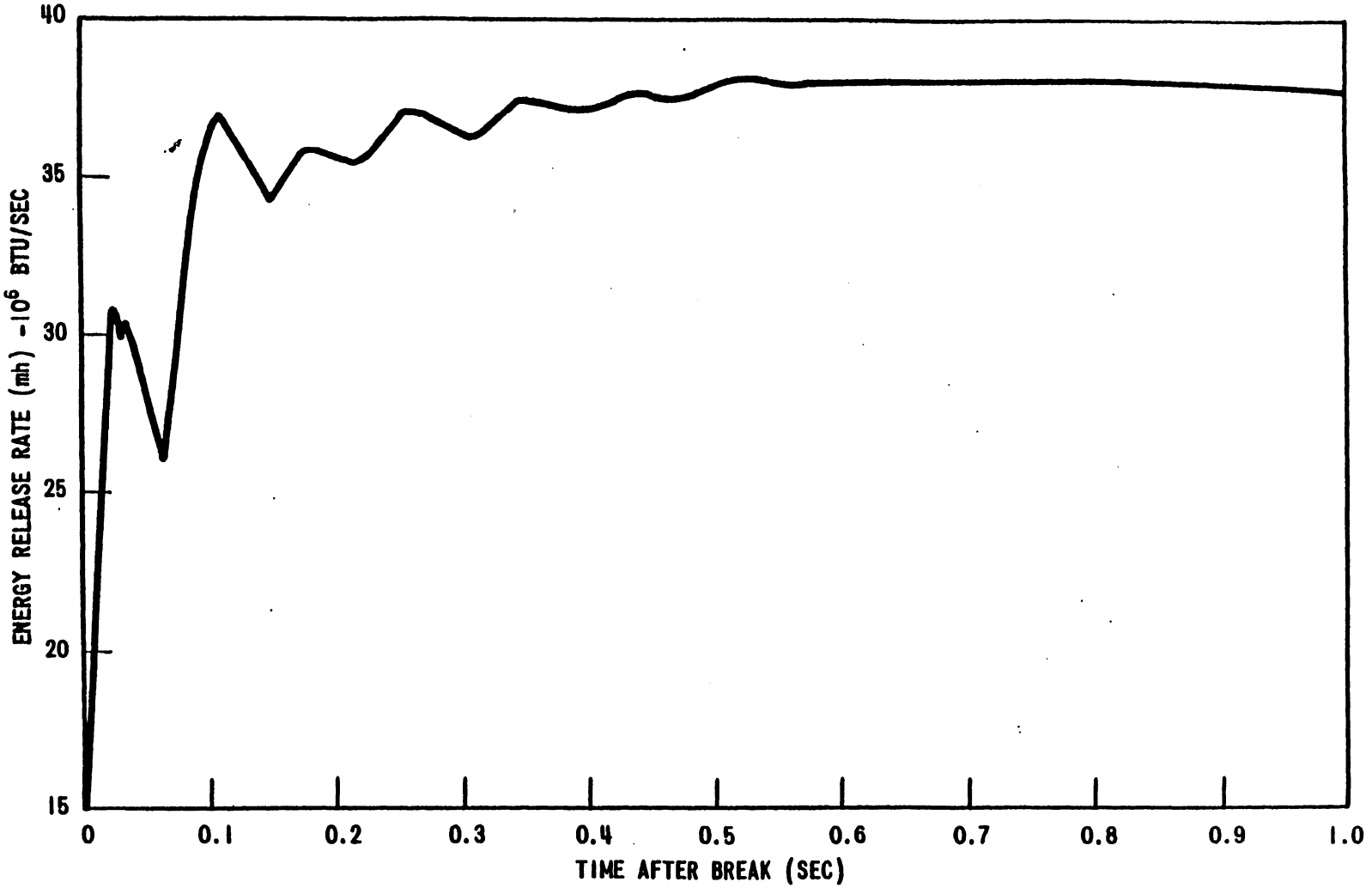

FIGURE 6.2.1-31 Cold Leg Single Ended Split, mh Transient

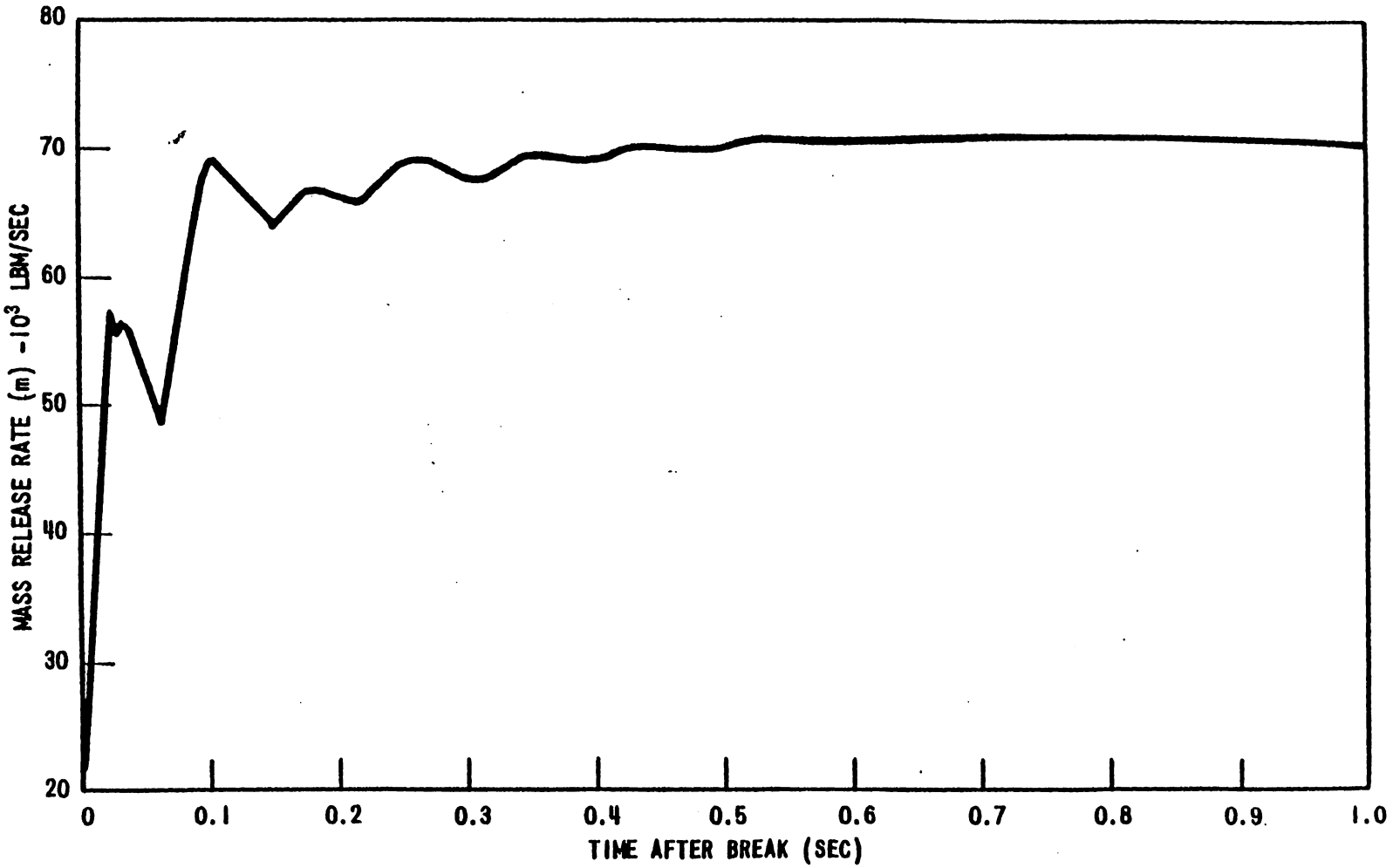

FIGURE 6.2.1-32 Cold Leg Single Ended Split, m Transient

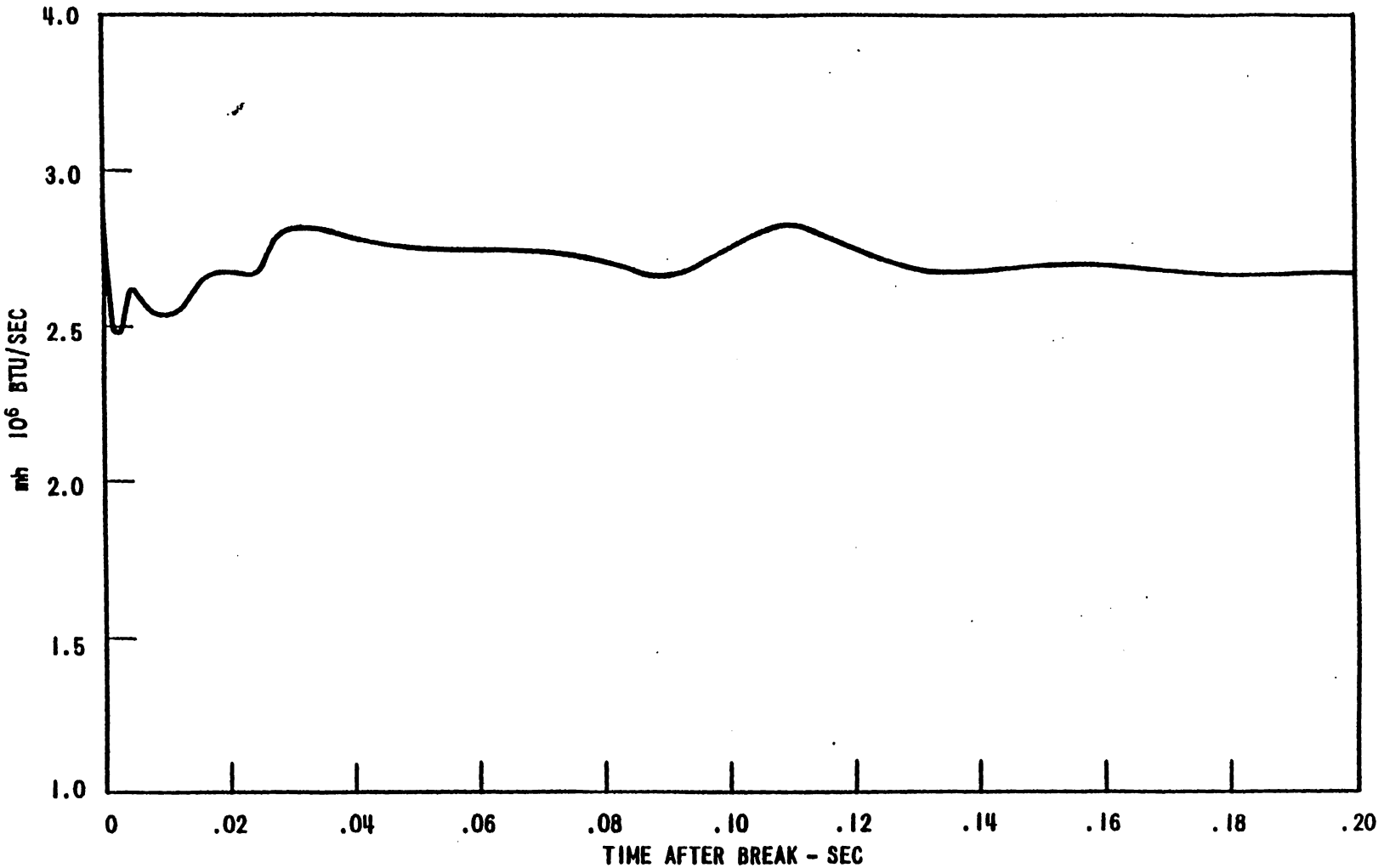

FIGURE 6.2.1-33 Pressurizer Spray Line mh Transient

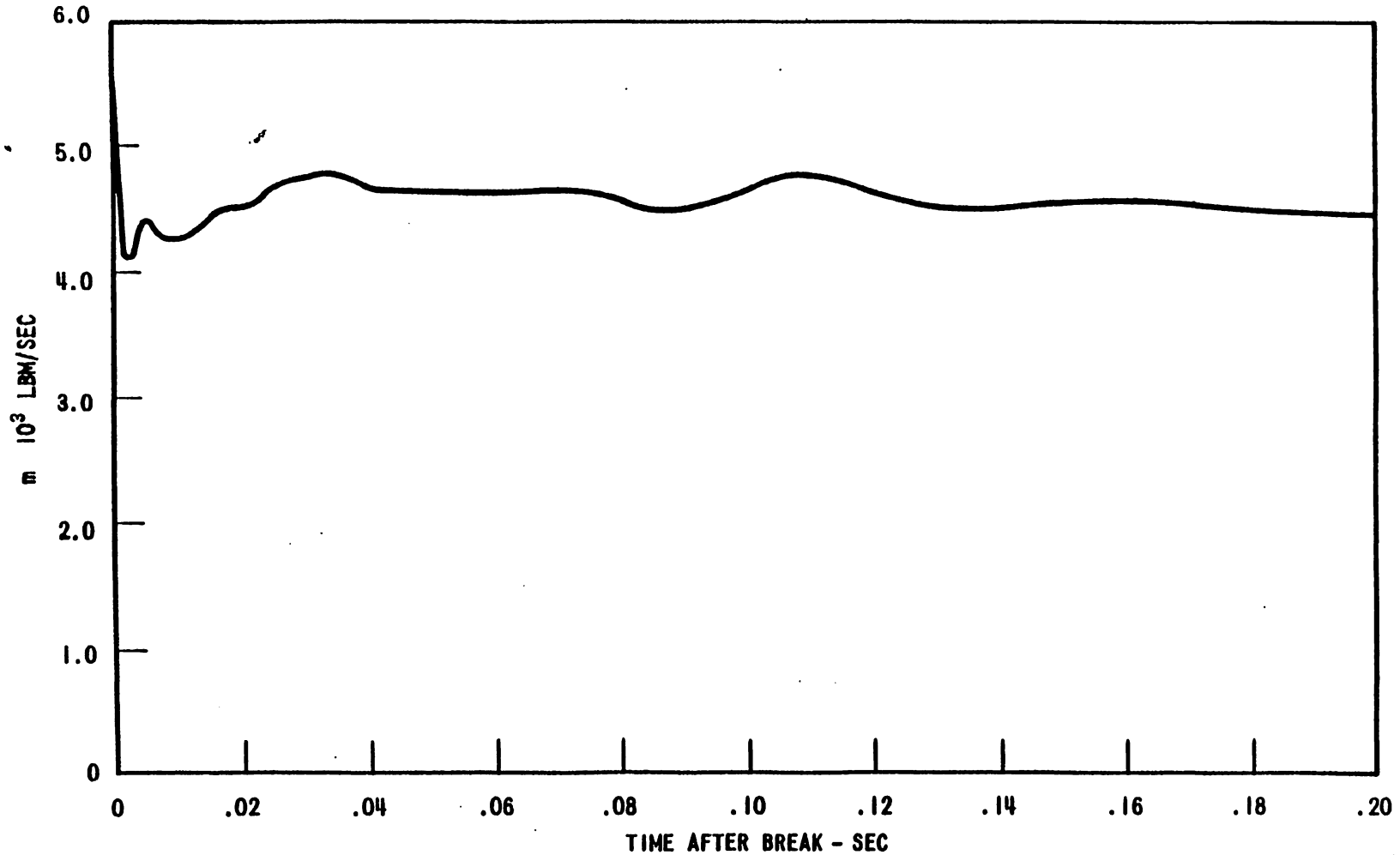

FIGURE 6.2.1-34 Pressurizer Spray Line m Transient

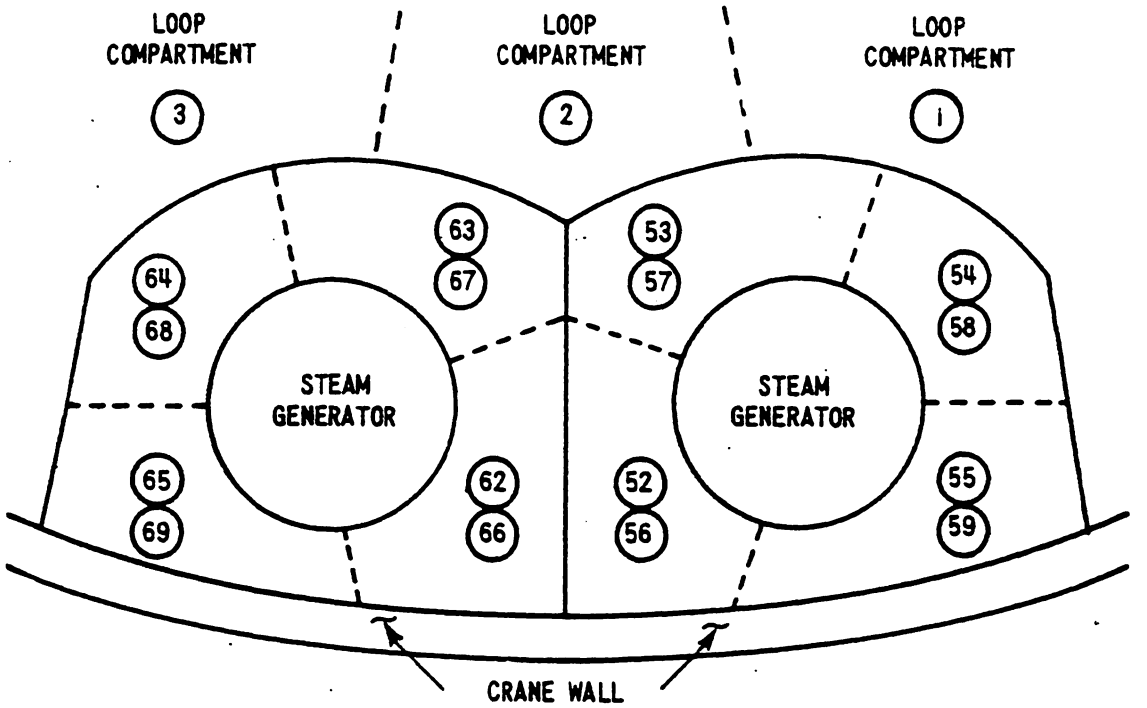

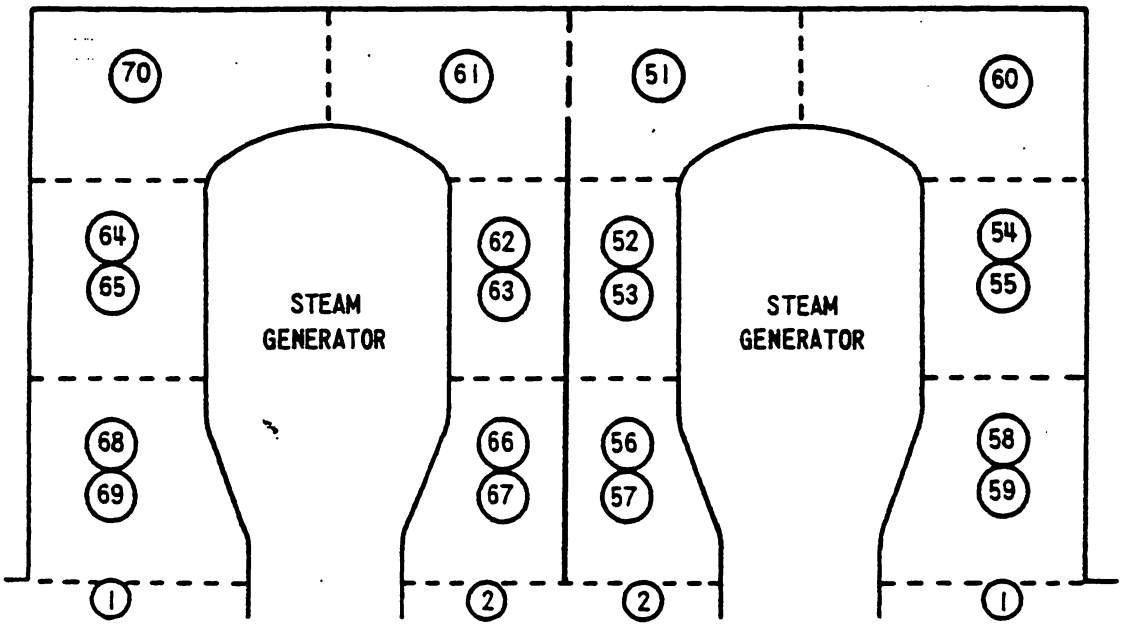

FIGURE 6.2.1-41 TVA Steam Generator Enclosure

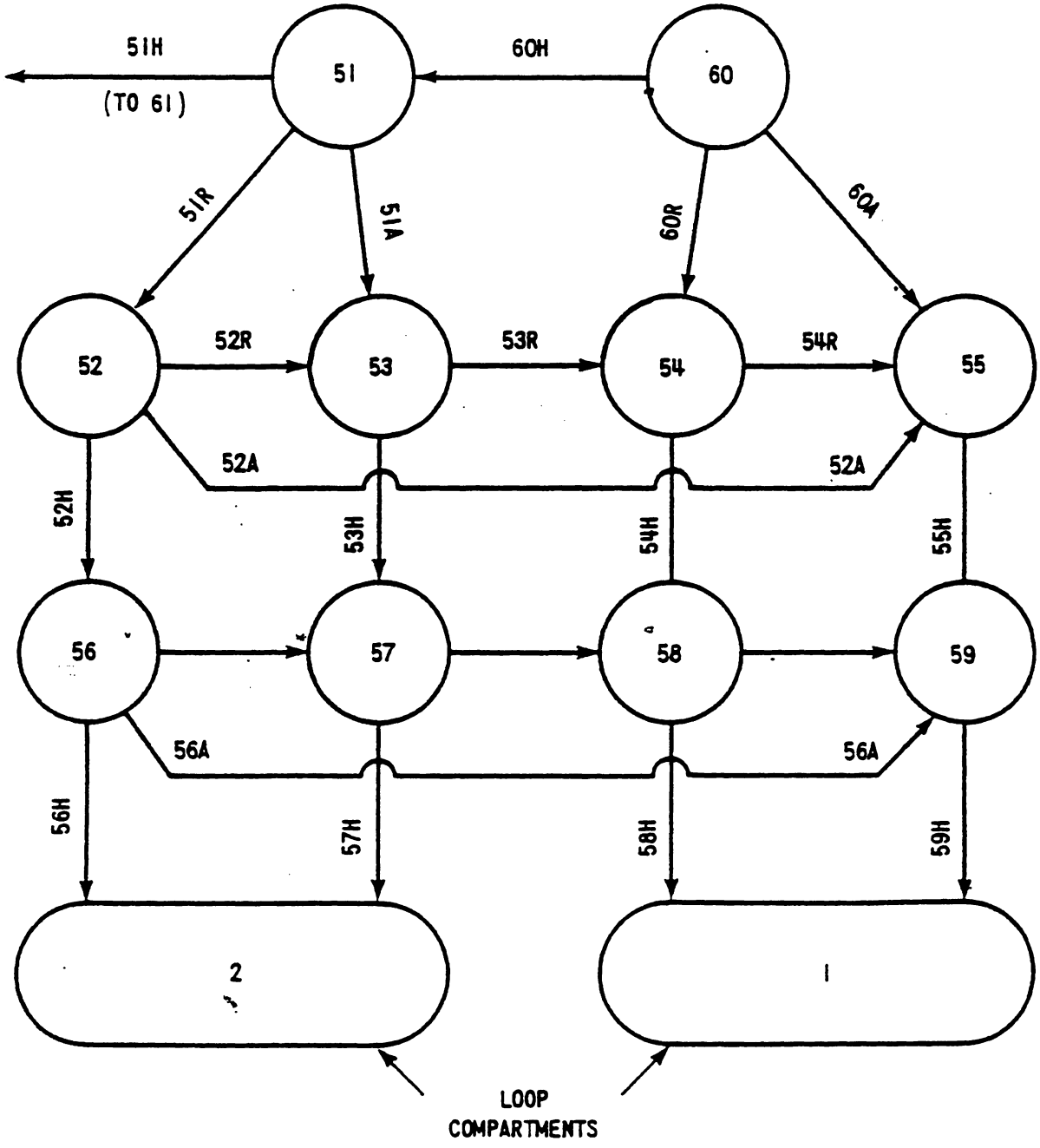

FIGURE 6.2.1-42 TMD Flowpaths Steam Generator Enclosures

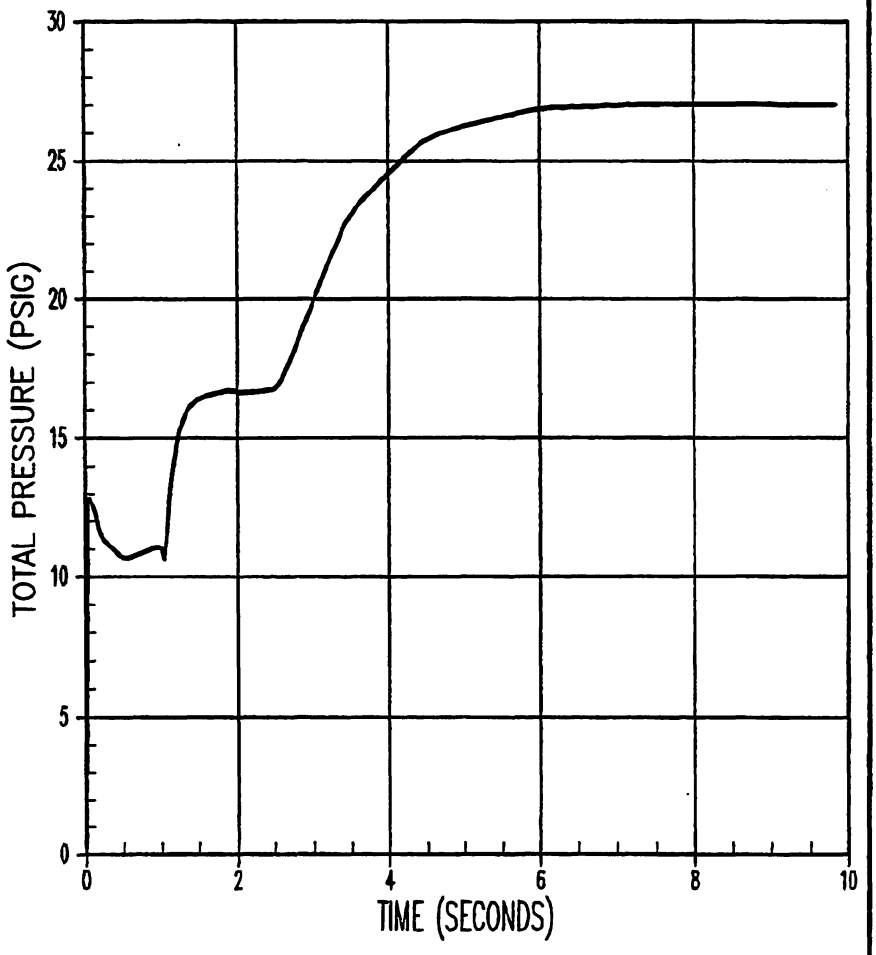

FIGURE 6.2.1-43 Steam Line Break Pressure Element 51

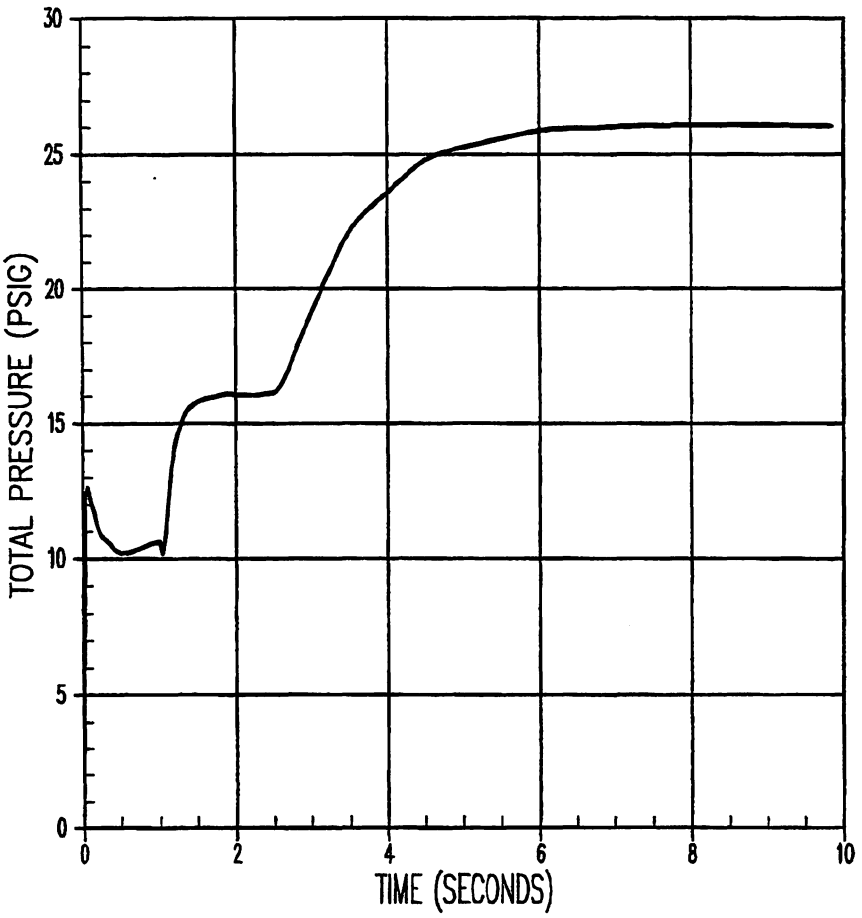

FIGURE 6.2.1-44 Steam Line Break Pressure Element 52

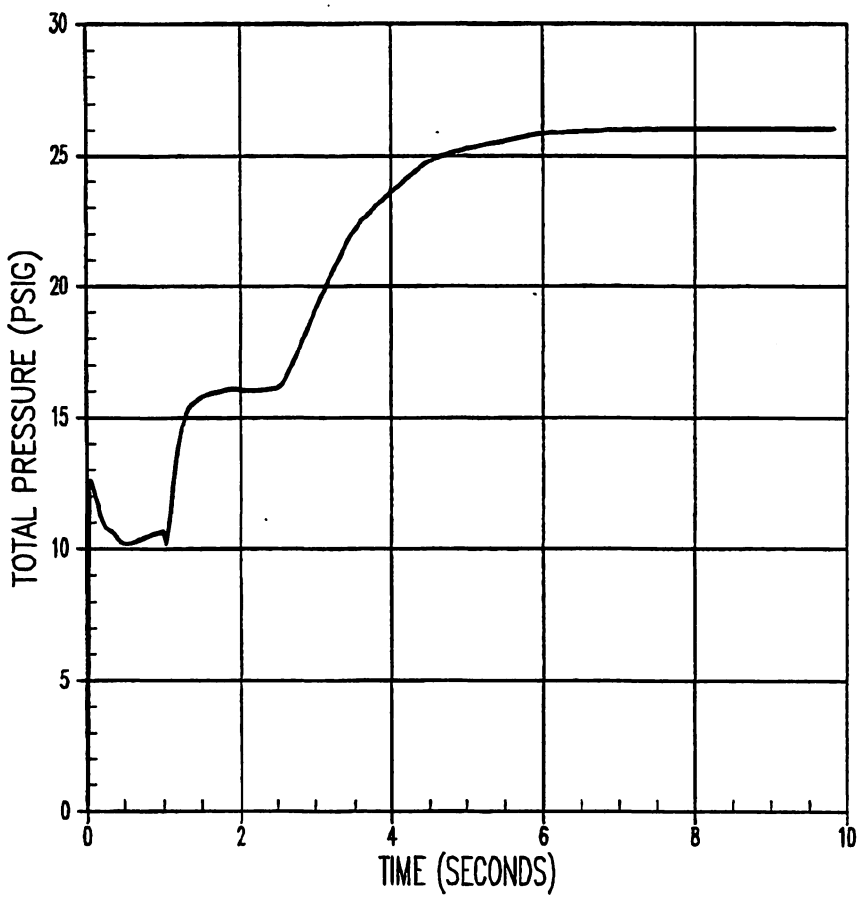

FIGURE 6.2.1-45 Steam Line Break Pressure Element 53

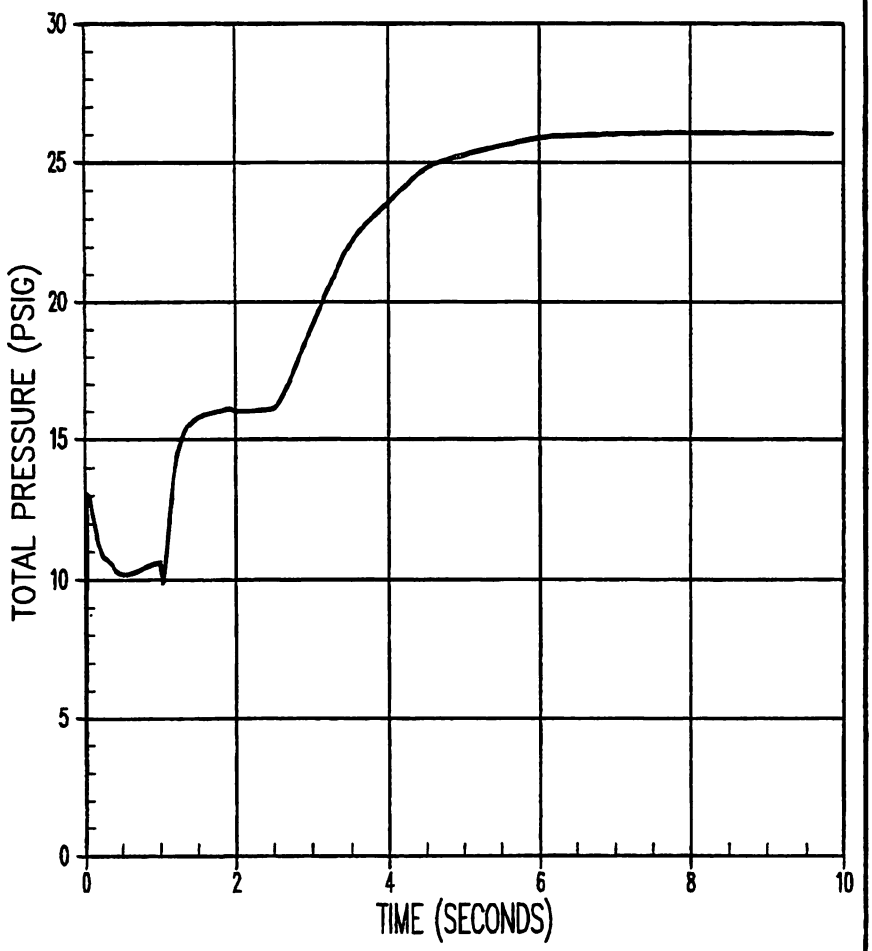

FIGURE 6.2.1-46 Steam Line Break Pressure Element 54

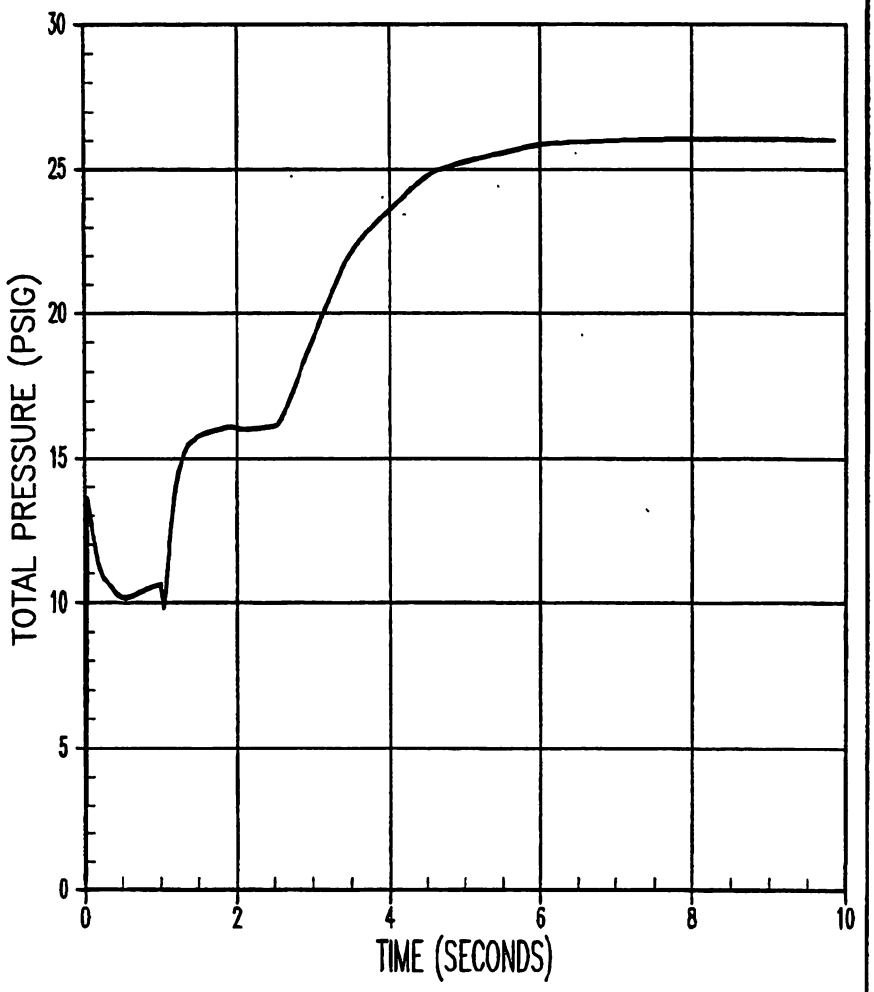

FIGURE 6.2.1-47 Steam Line Break Pressure Element 55

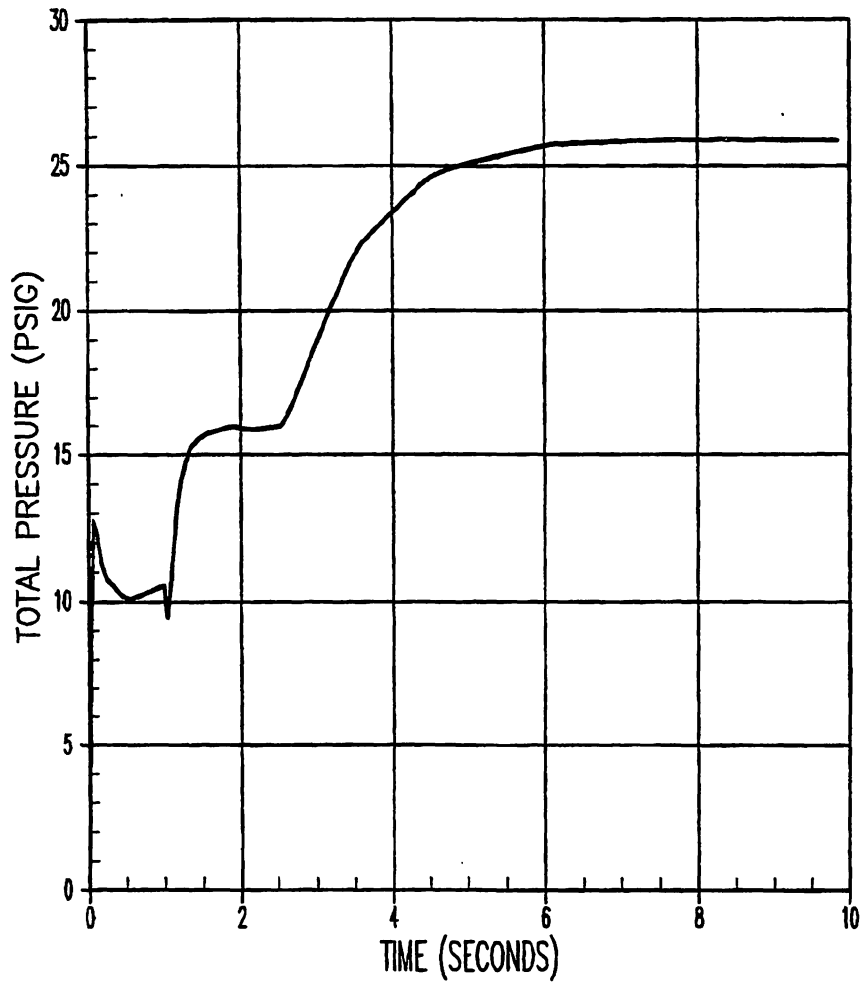

FIGURE 6.2.1-4B Steam Line Break Pressure Element 56

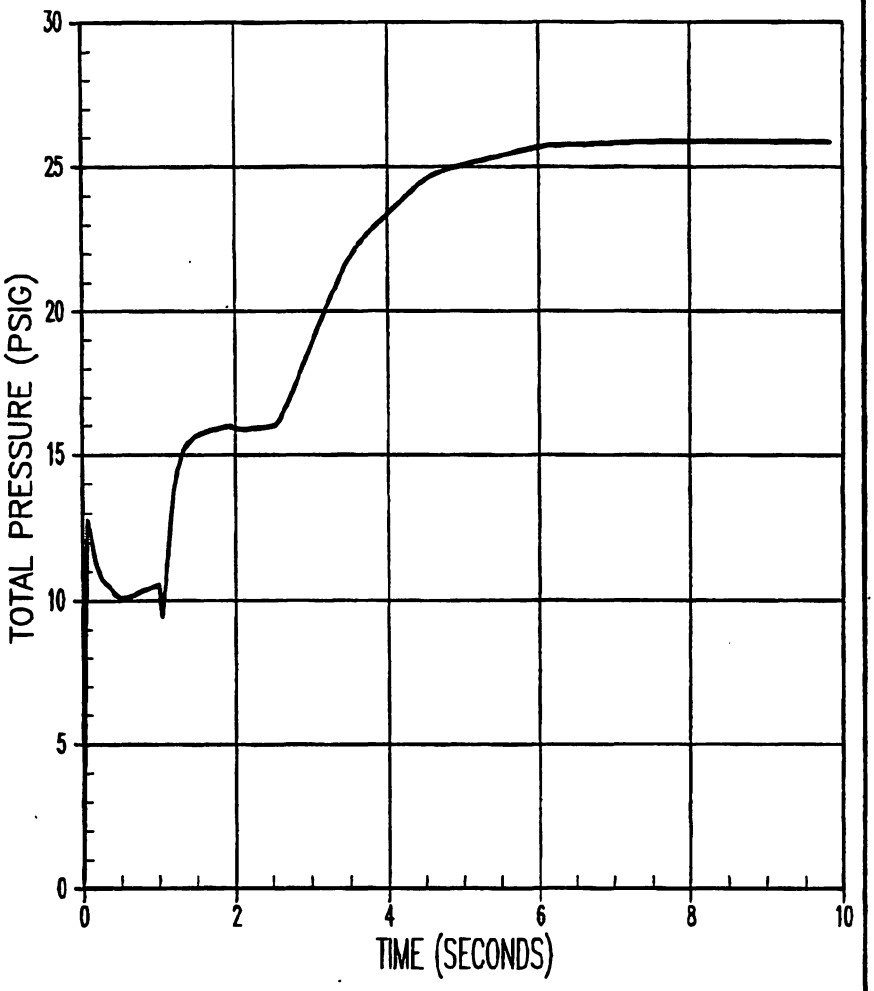

FIGURE 6.2.1-49 Steam Line Break Pressure Element 57

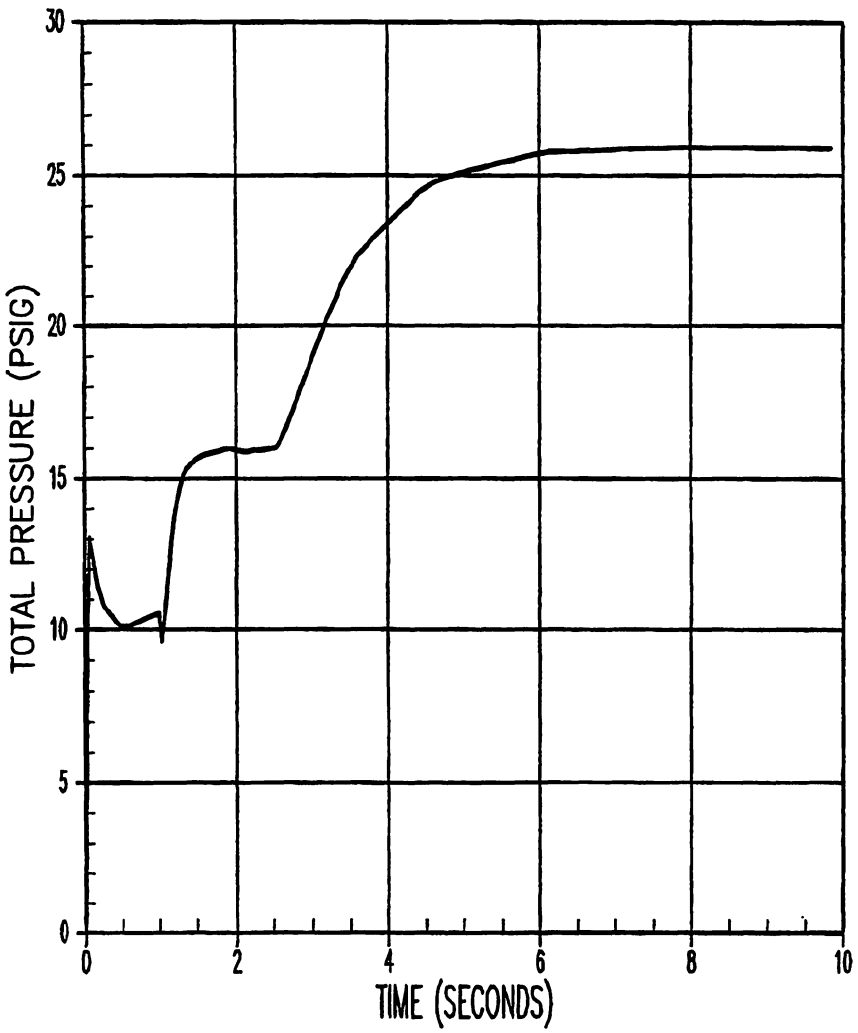

FIGURE 6.2.1-50 Steam Line Break Pressure Element 58

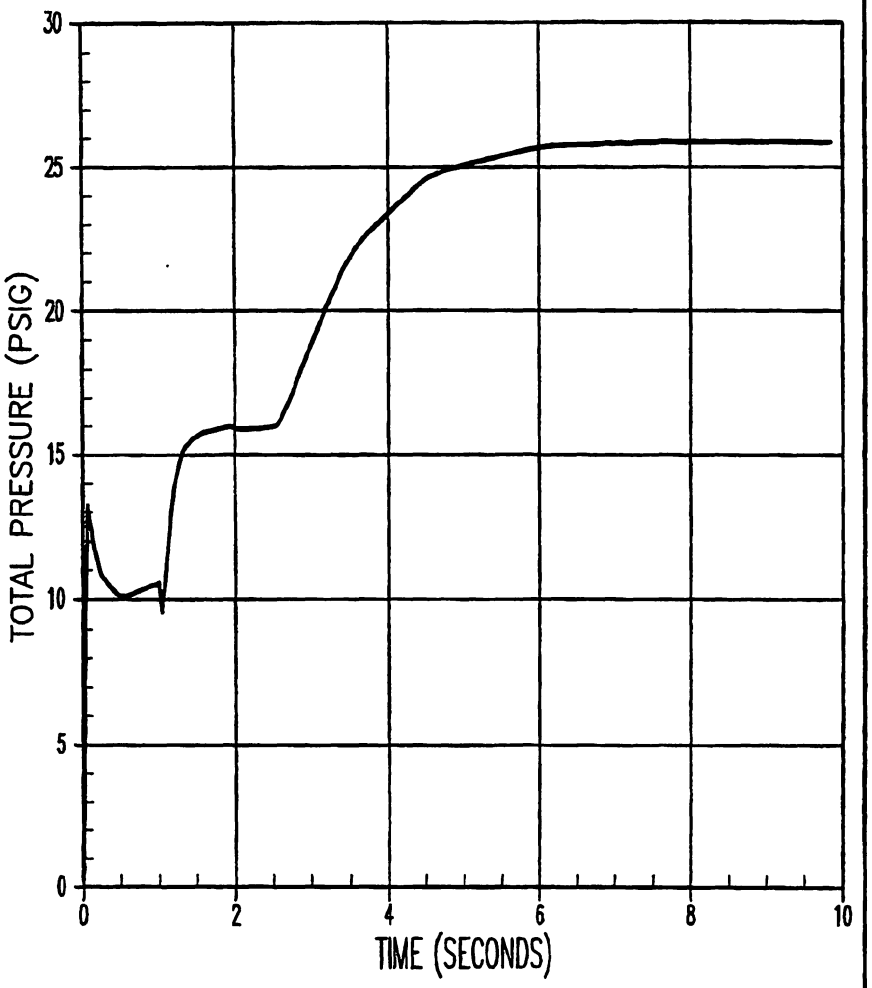

FIGURE 6.2.1-51 Steam Line Break Pressure Element 59

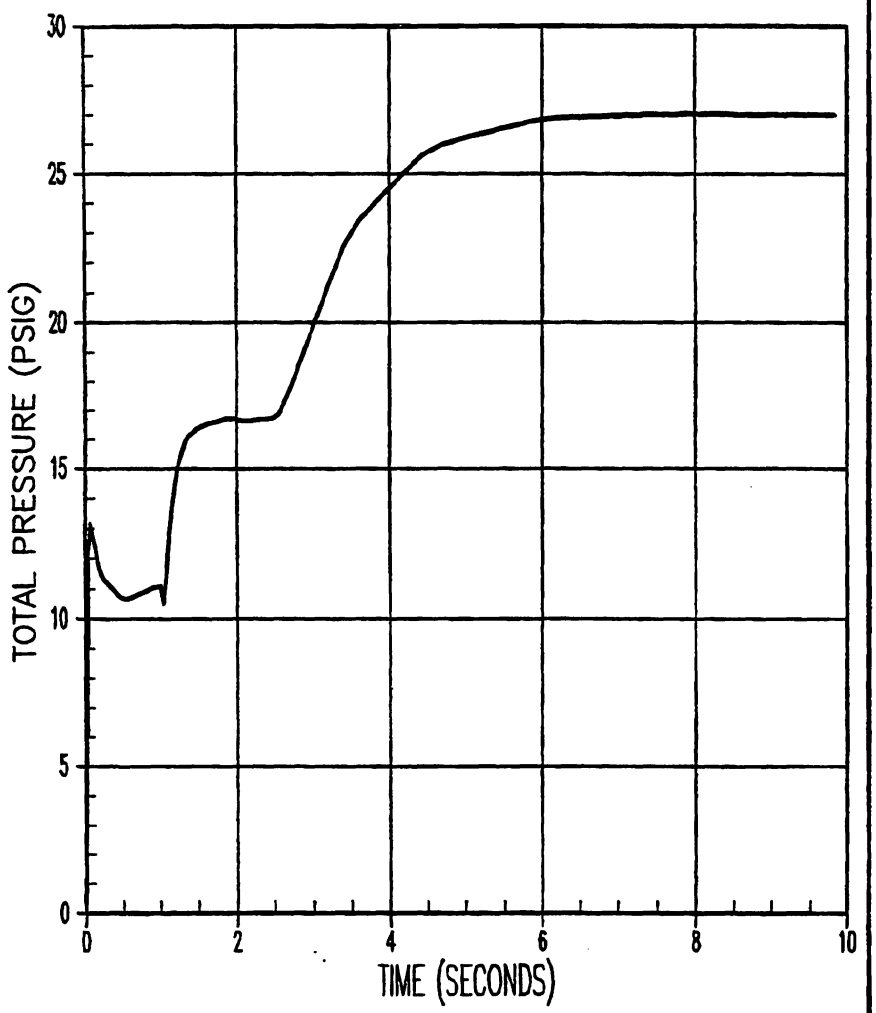

FIGURE 6.2.1-52 Steam Line Break Pressure Element 60

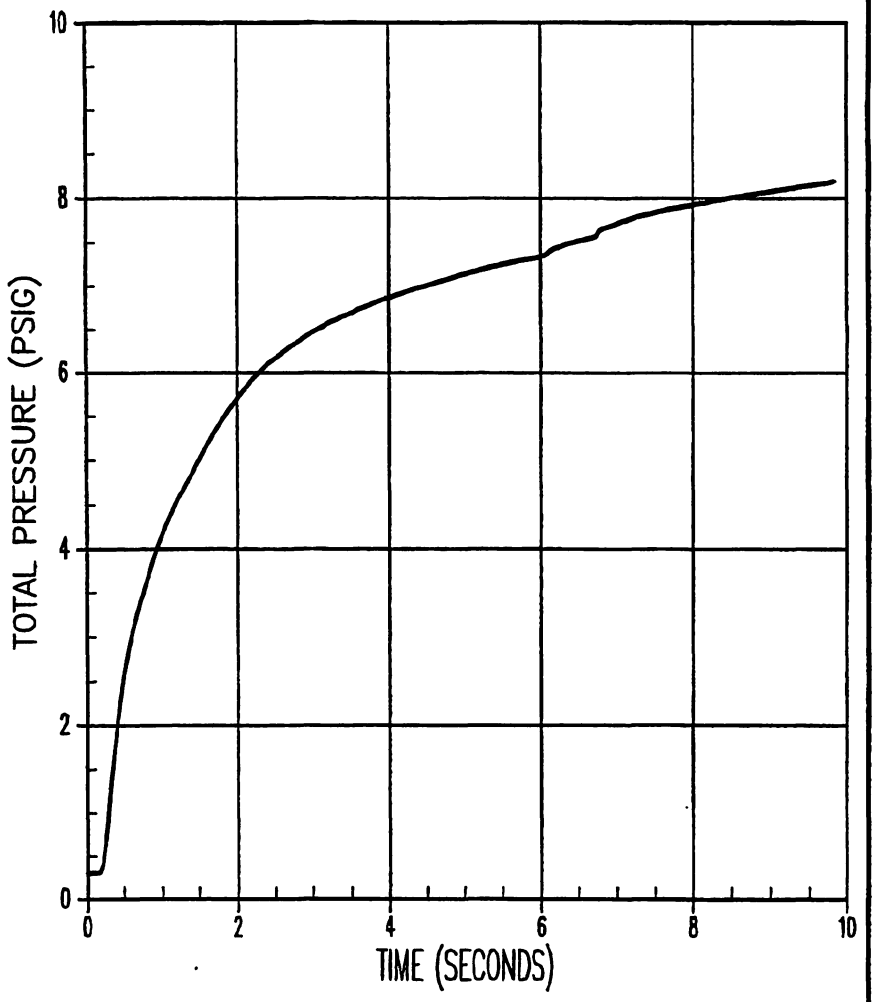

FIGURE 6.2.1-53 Steam Line Break Pressure Element 25

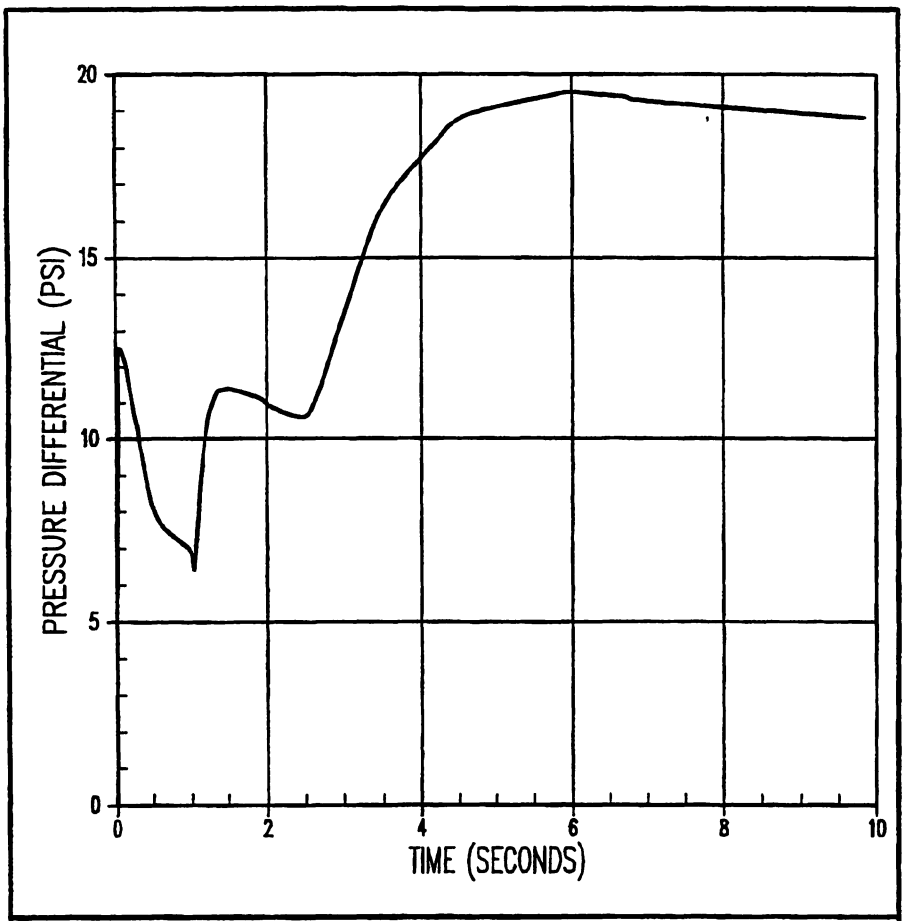

FIGURE 6.2.1-54 DP51-25 TVA Steam Generator Enclosure

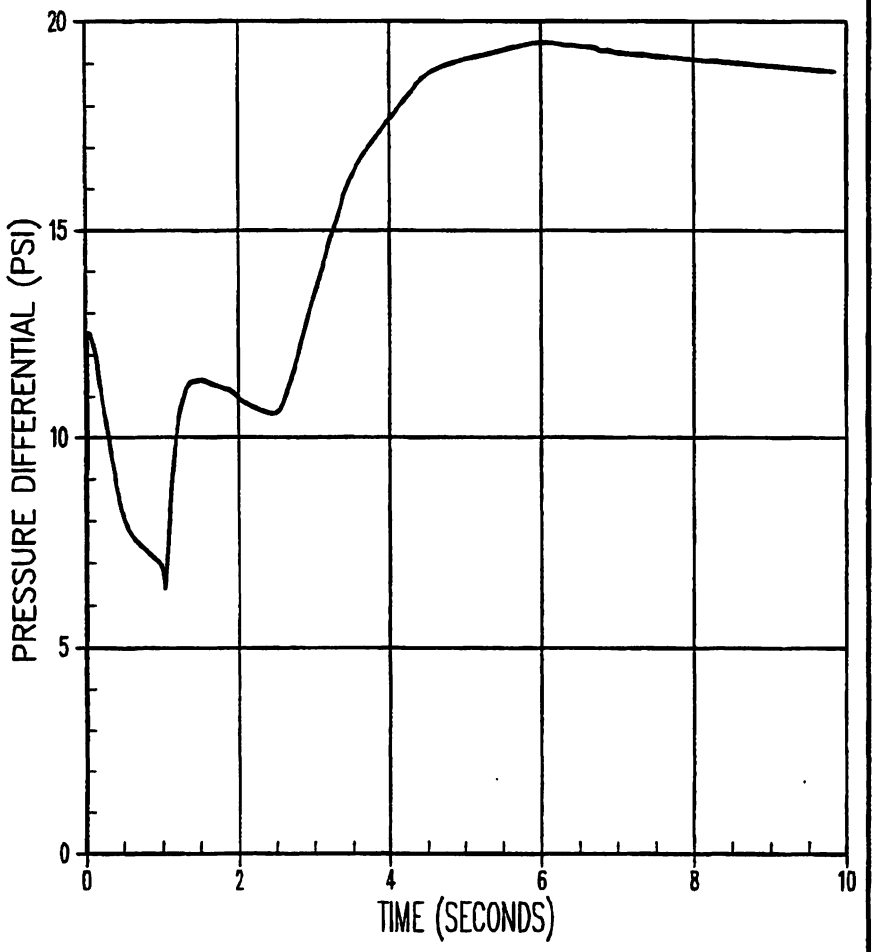

FIGURE 6.2.1-55 DP60-25 TVA Steam Generator Enclosure

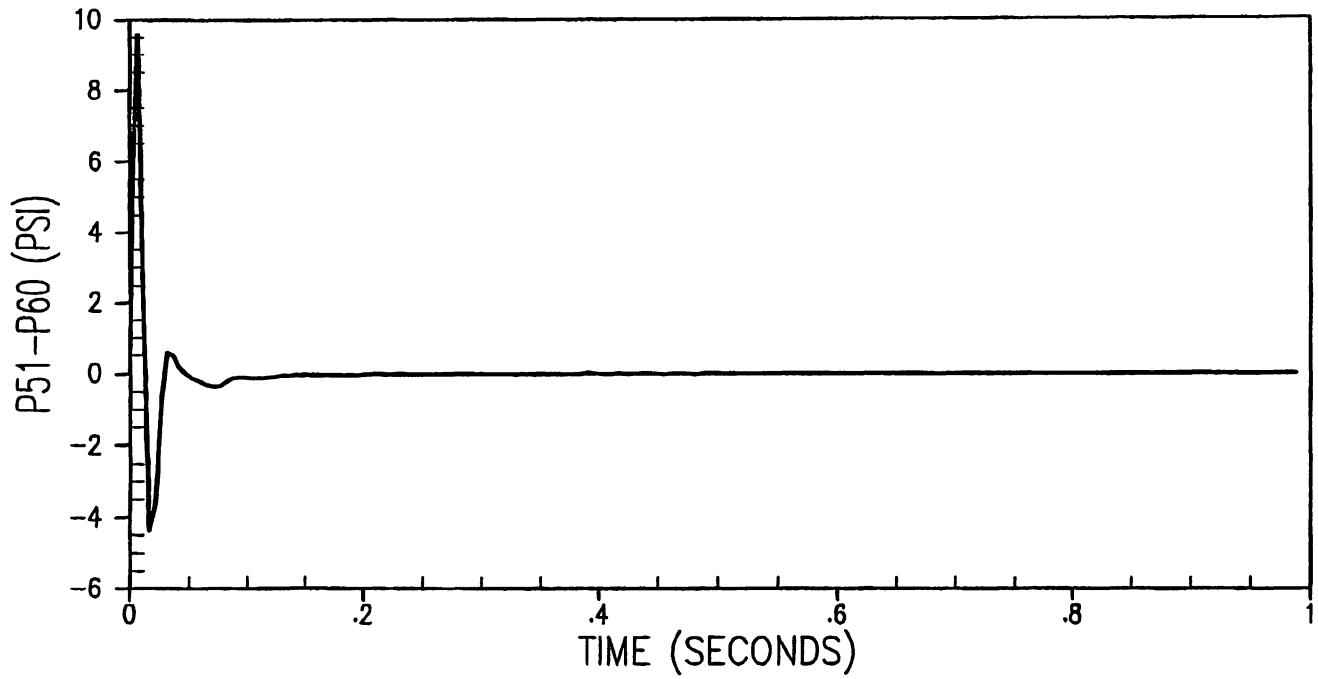

FIGURE 6.2.1-56 Steam Generator Enclosure Differential Pressures P51-P60

Revised by Amendment 18

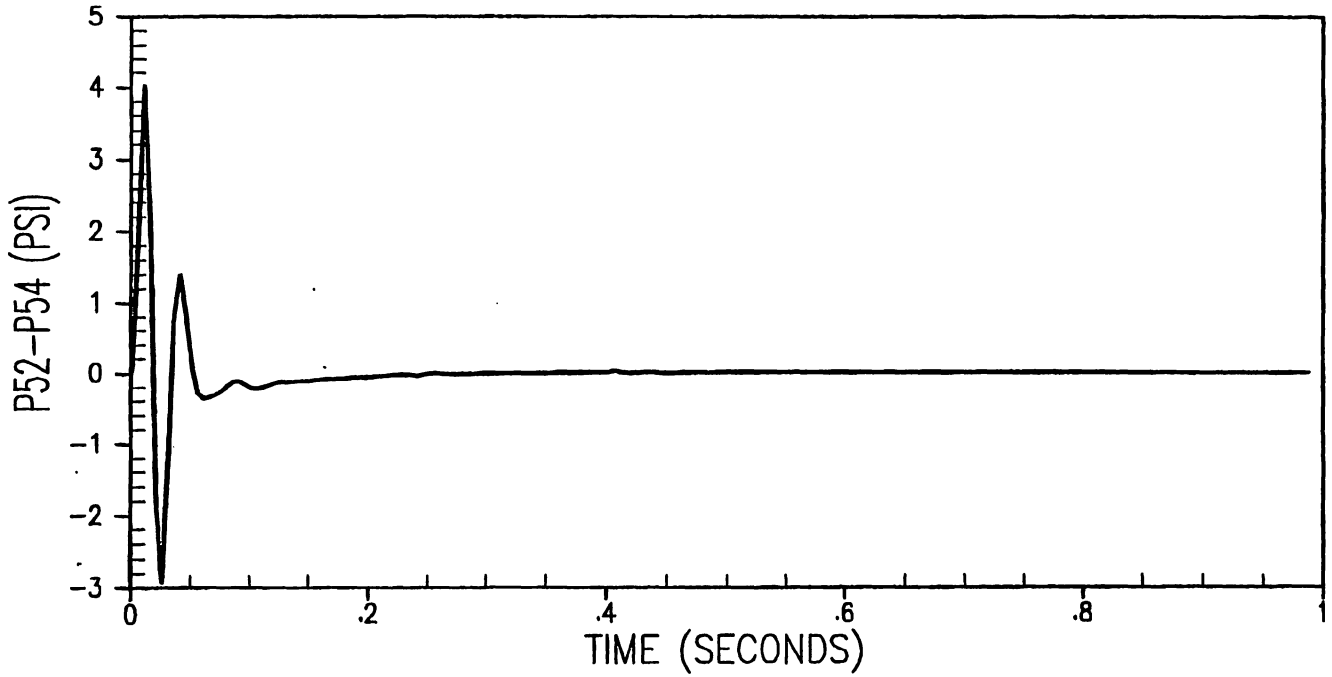

FIGURE 6.2.1-57 Steam Generator Enclosure Differential Pressures P52-P54

Revised by Amendment 18

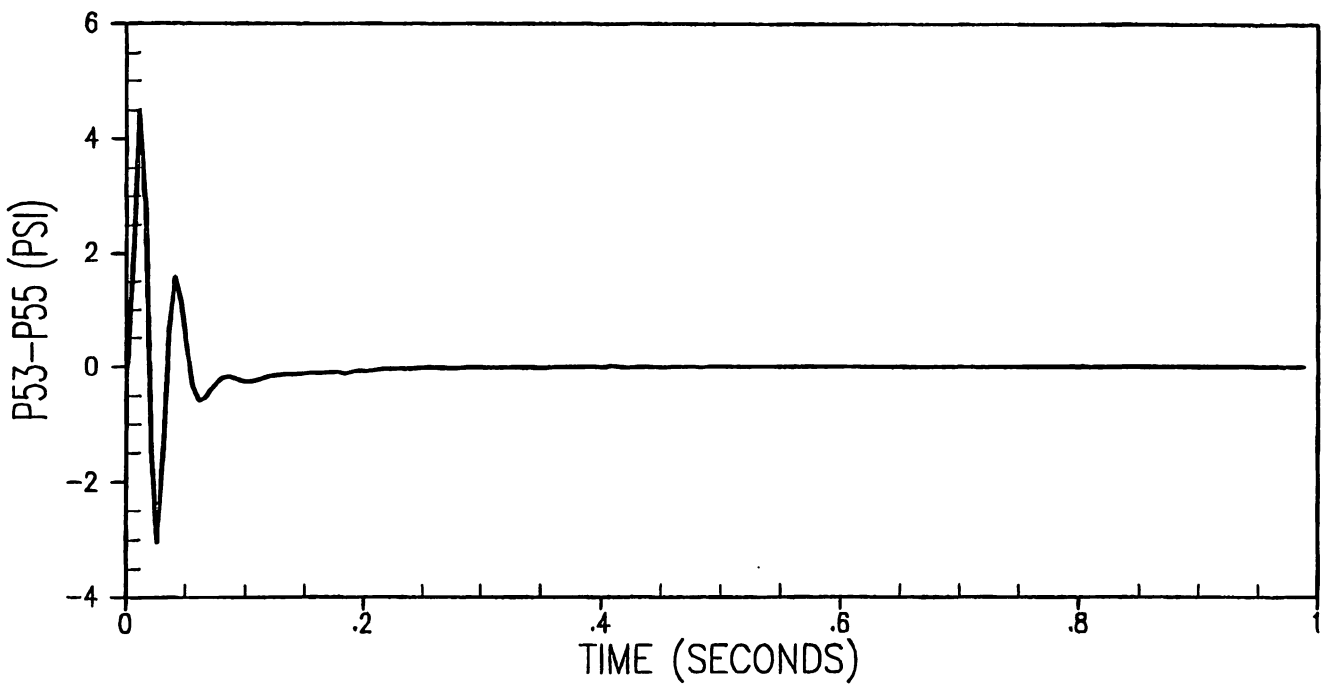

FIGURE 6.2.1–58 Steam Generator Enclosure Differential Pressures P53–P55

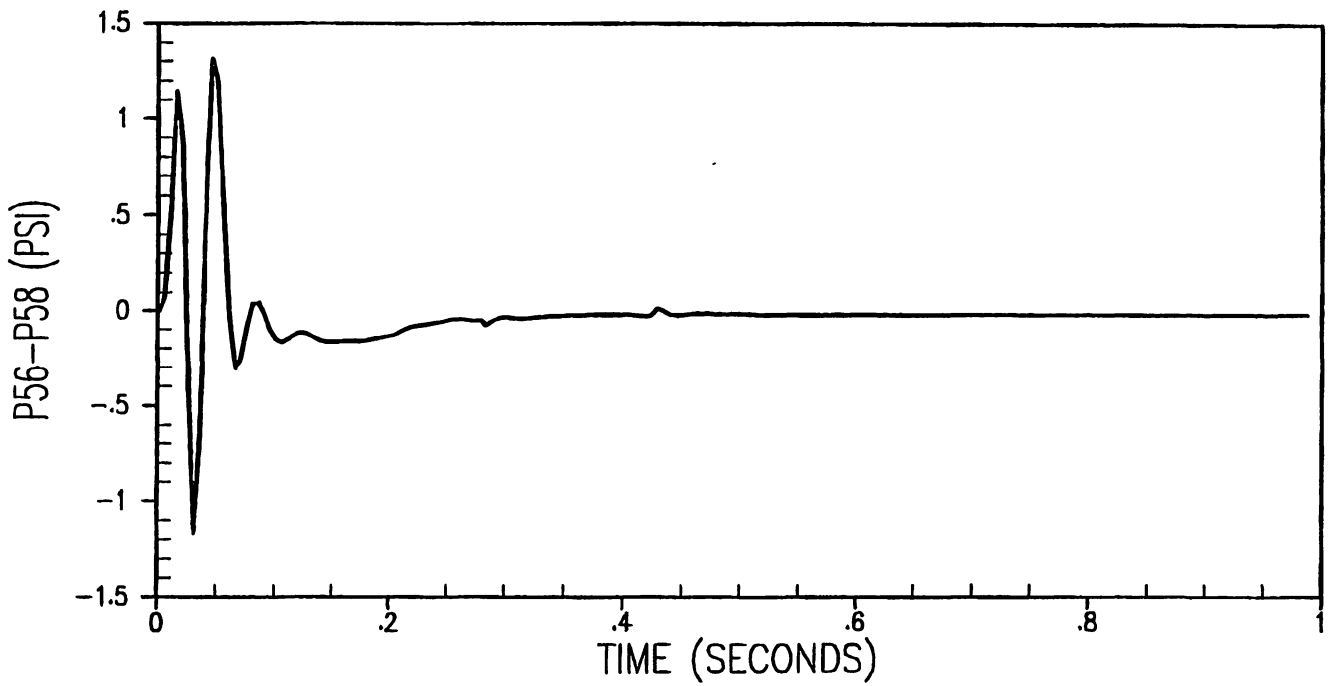

FIGURE 6.2.1-59 Steam Generator Enclosure Differential Pressures P56-P58

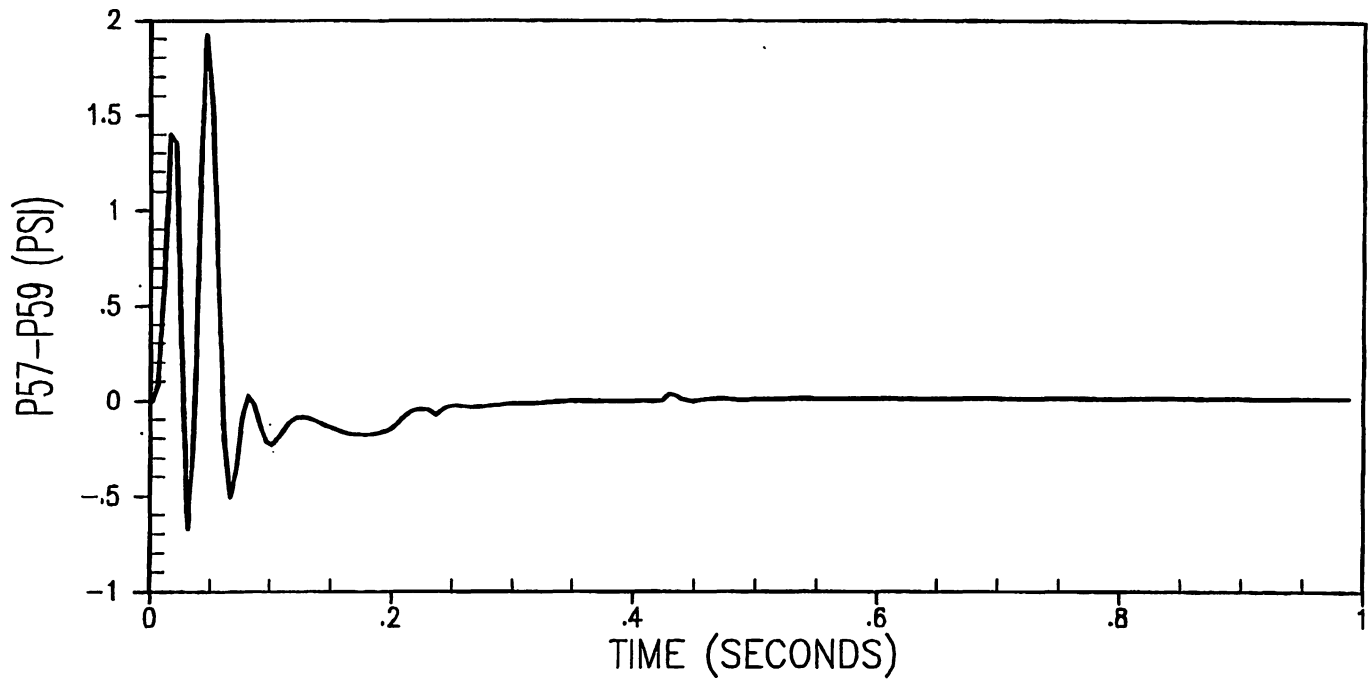

FIGURE 6.2.1−60 Steam Generator Differential Pressures P57−P59

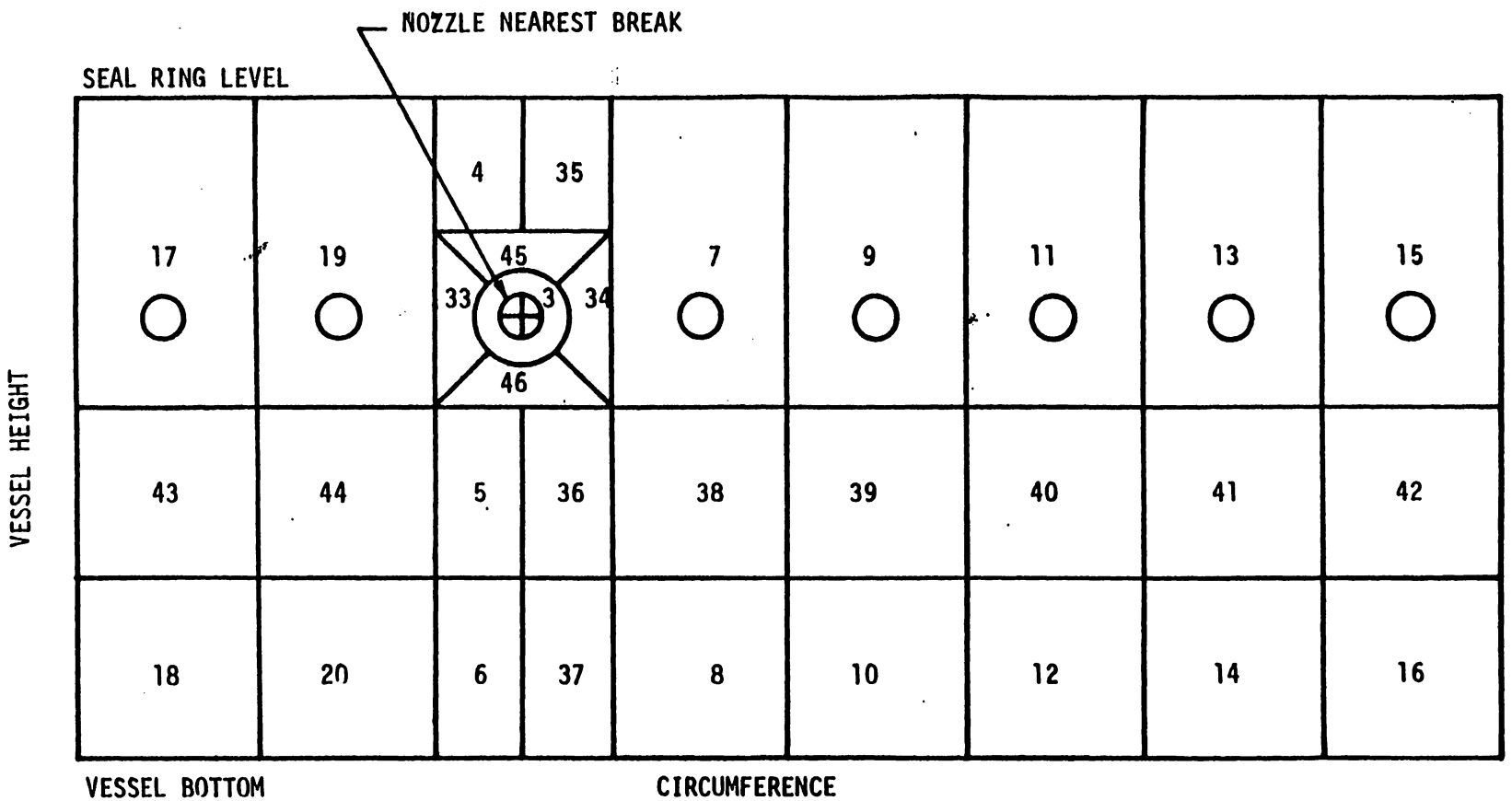

FIGURE 6.2.1-61 Reactor Cavity Developed View

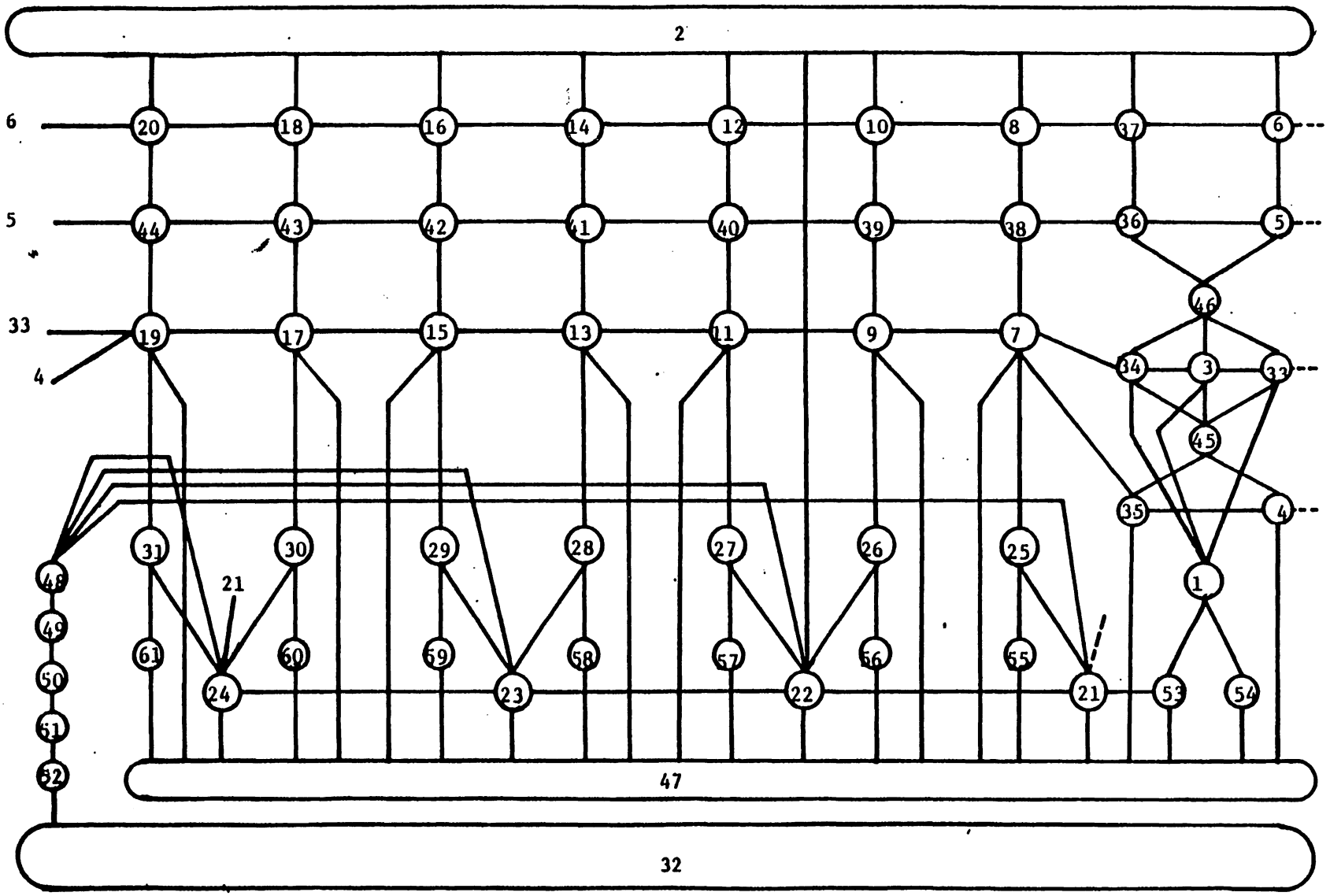

FIGURE 6.2.1-62 Reactor Cavity Flowpath Connections

Security-Related Information - Figure 6.2.1-63 Withhold Under 10 CFR 2.390

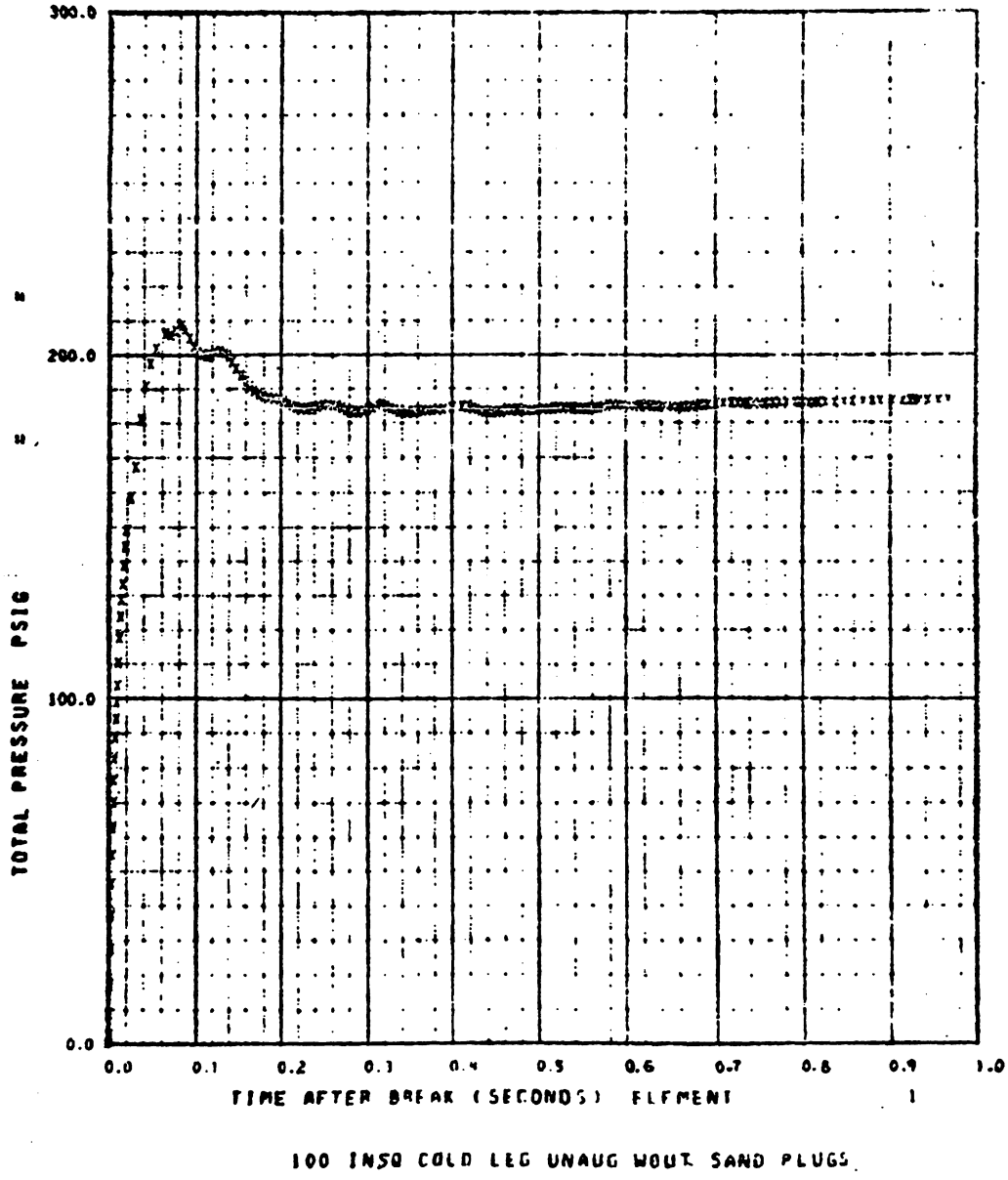

FIGURE 6.2.1-63A REACTOR CAVITY PRESSURE ANALYSIS - ELEMENT 1

(Revised by Amendment 13)

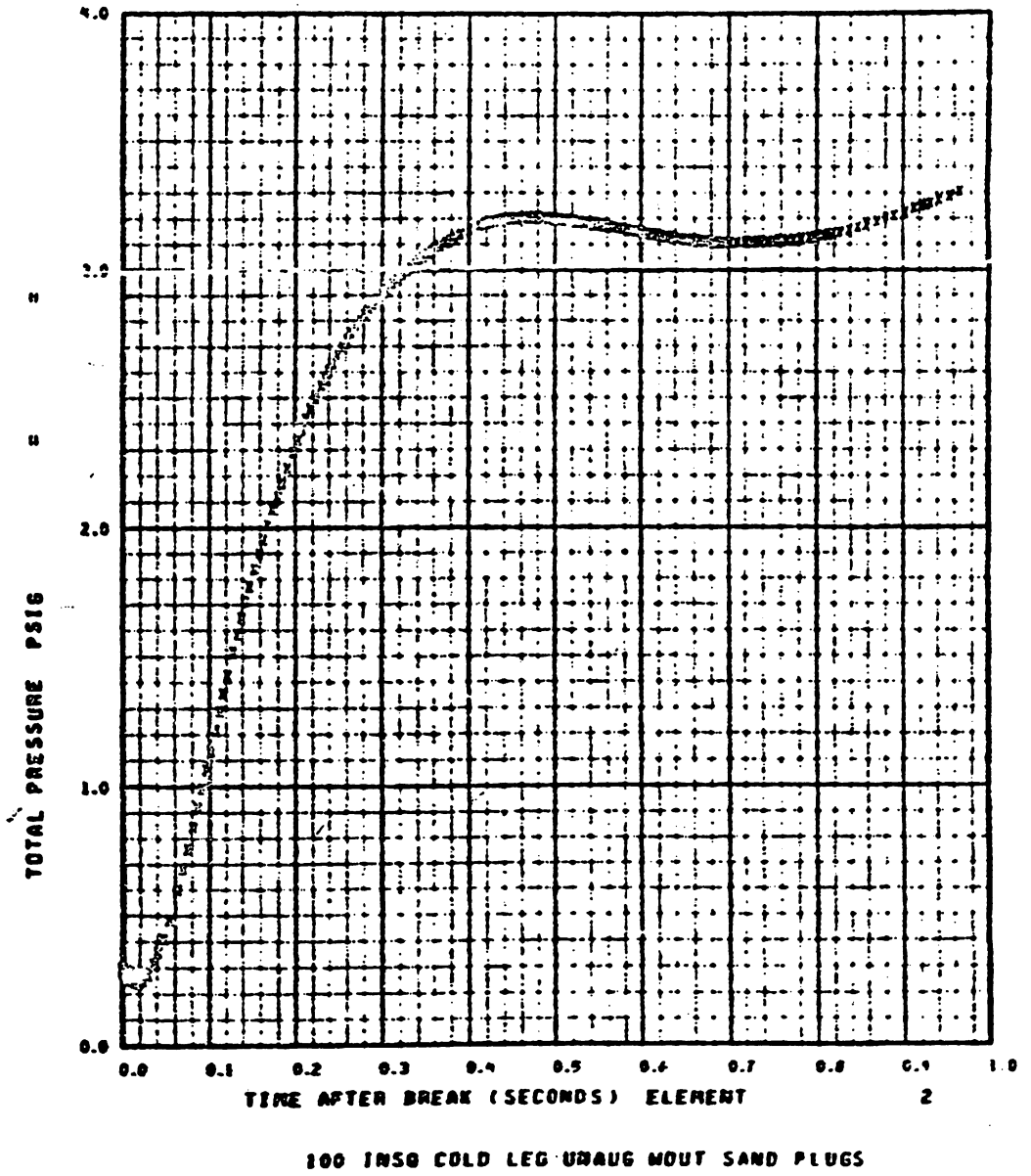

FIGURE 6.2.1-63B REACTOR CAVITY PRESSURE ANALYSIS - ELEMENT 2

(Revised by Amendment 13)

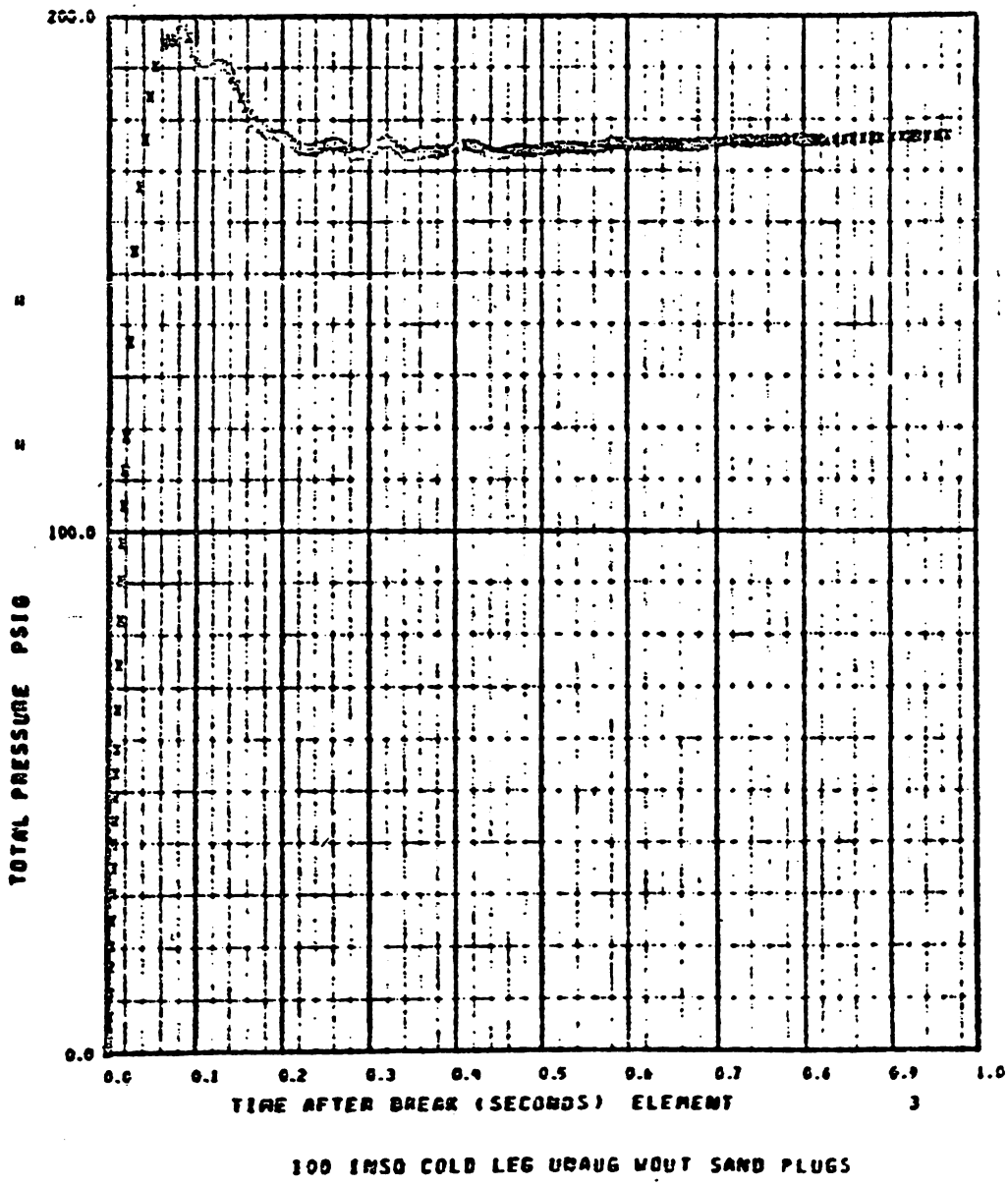

FIGURE 6.2.1-63C REACTOR CAVITY PRESSURE ANALYSIS - ELEMENT 3

(Revised by Amendment 13)

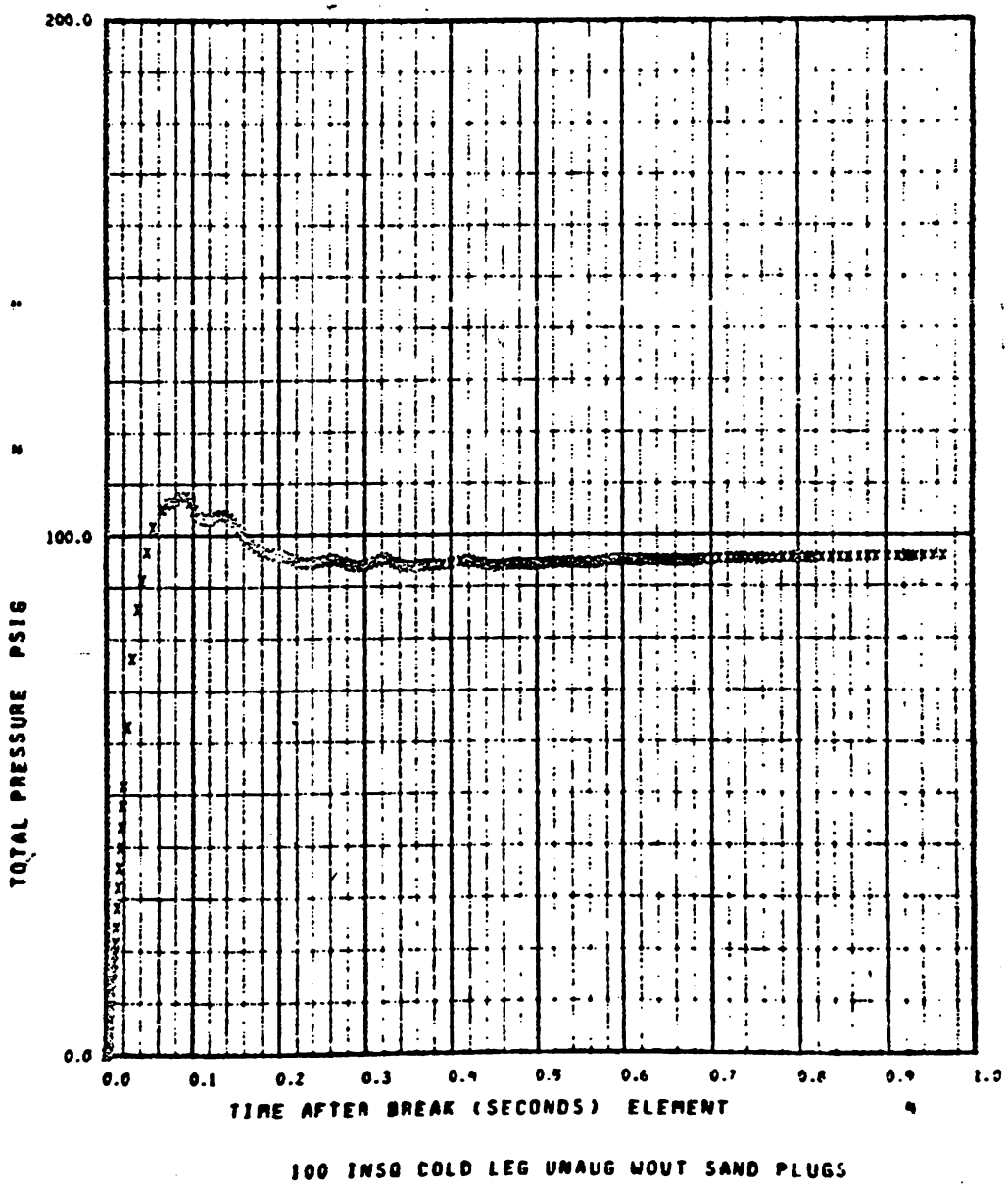

FIGURE 6.2.1-63D REACTOR CAVITY PRESSURE ANALYSIS - ELEMENT 4

(Revised by Amendment 13)

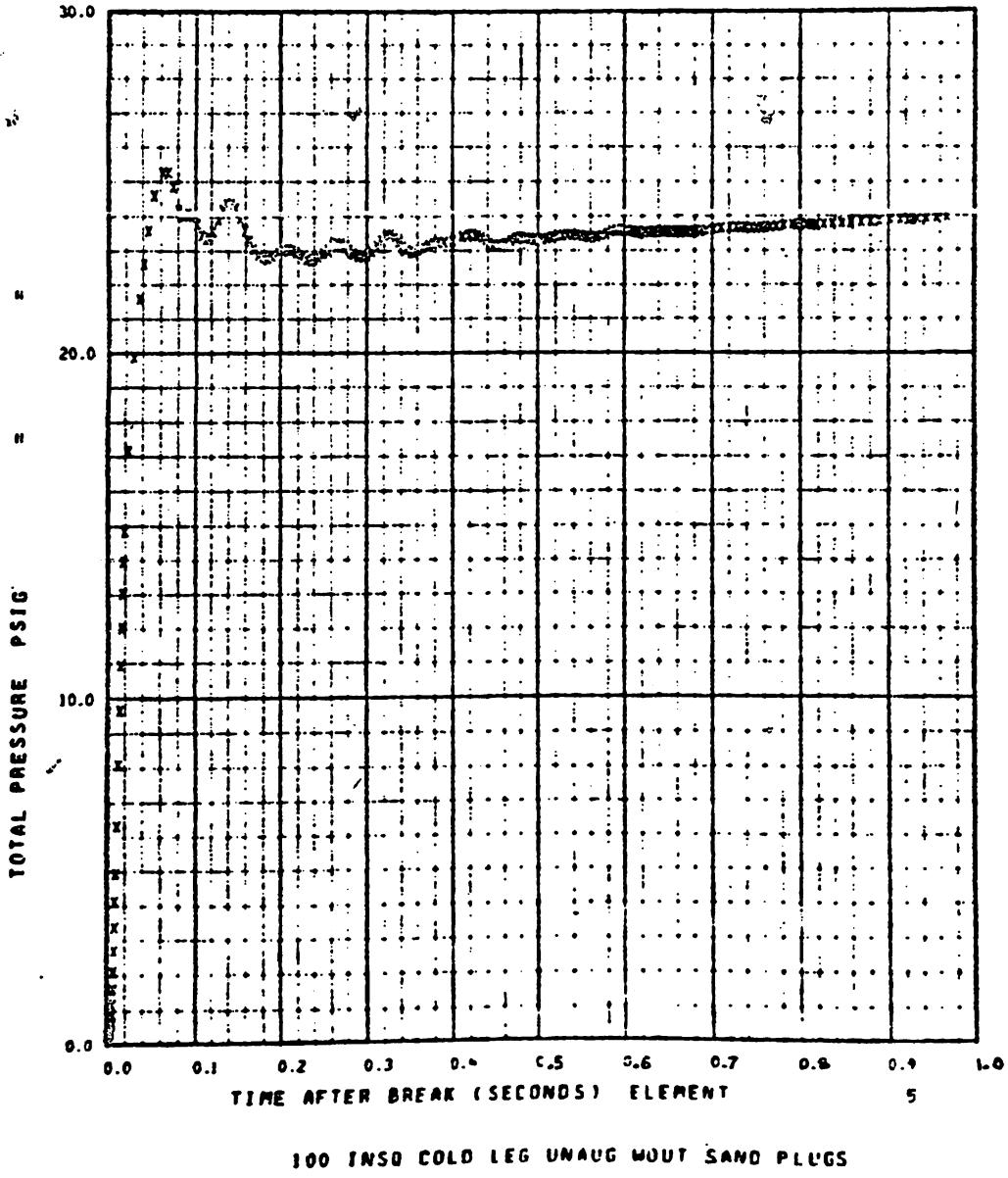

FIGURE 6.2.1-63E REACTOR CAVITY PRESSURE ANALYSIS - ELEMENT 5

(Revised by Amendment 13)

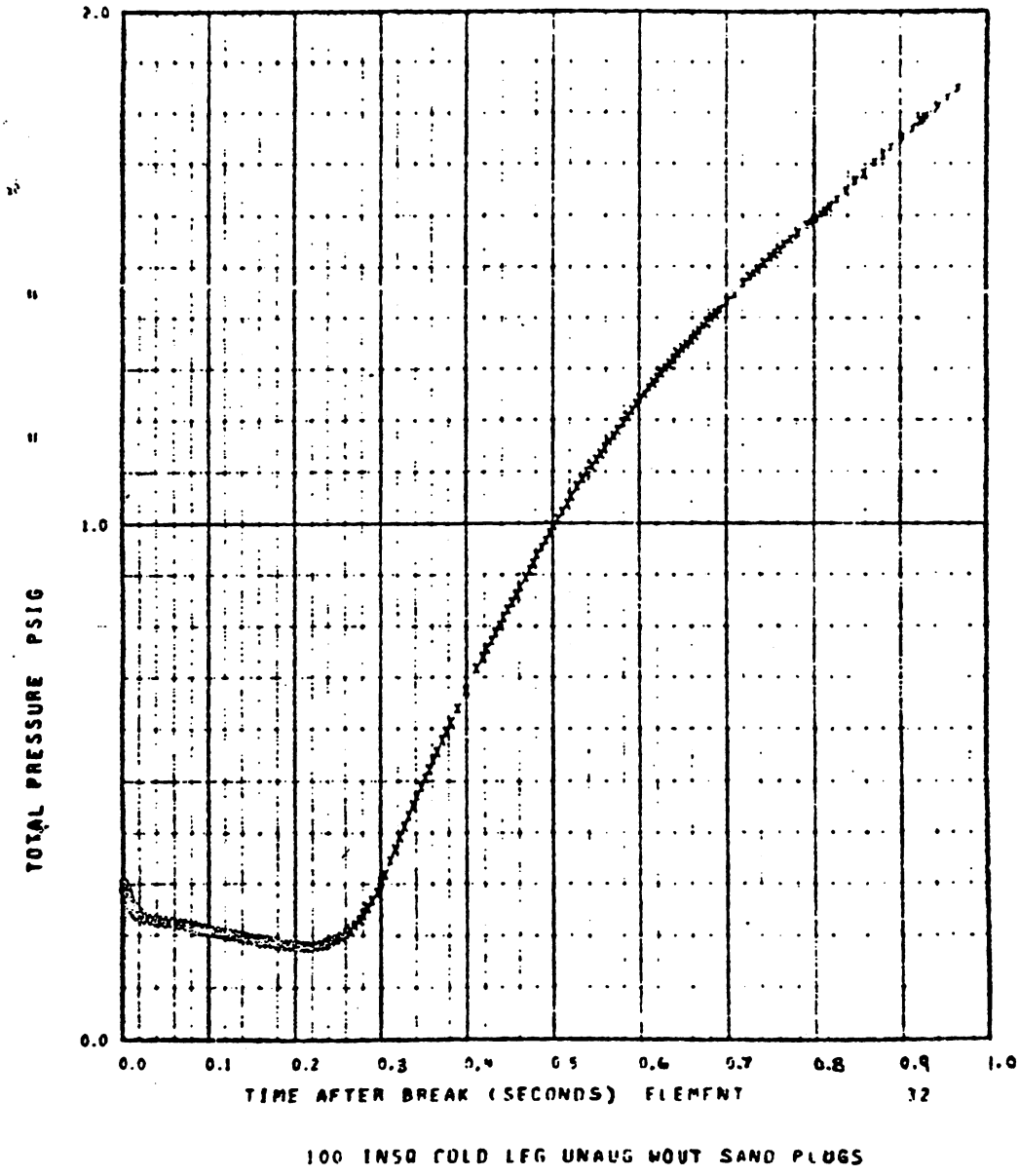

FIGURE 6.2.1-63F REACTOR CAVITY PRESSURE ANALYSIS - ELEMENT 32

(Revised by Amendment 13)

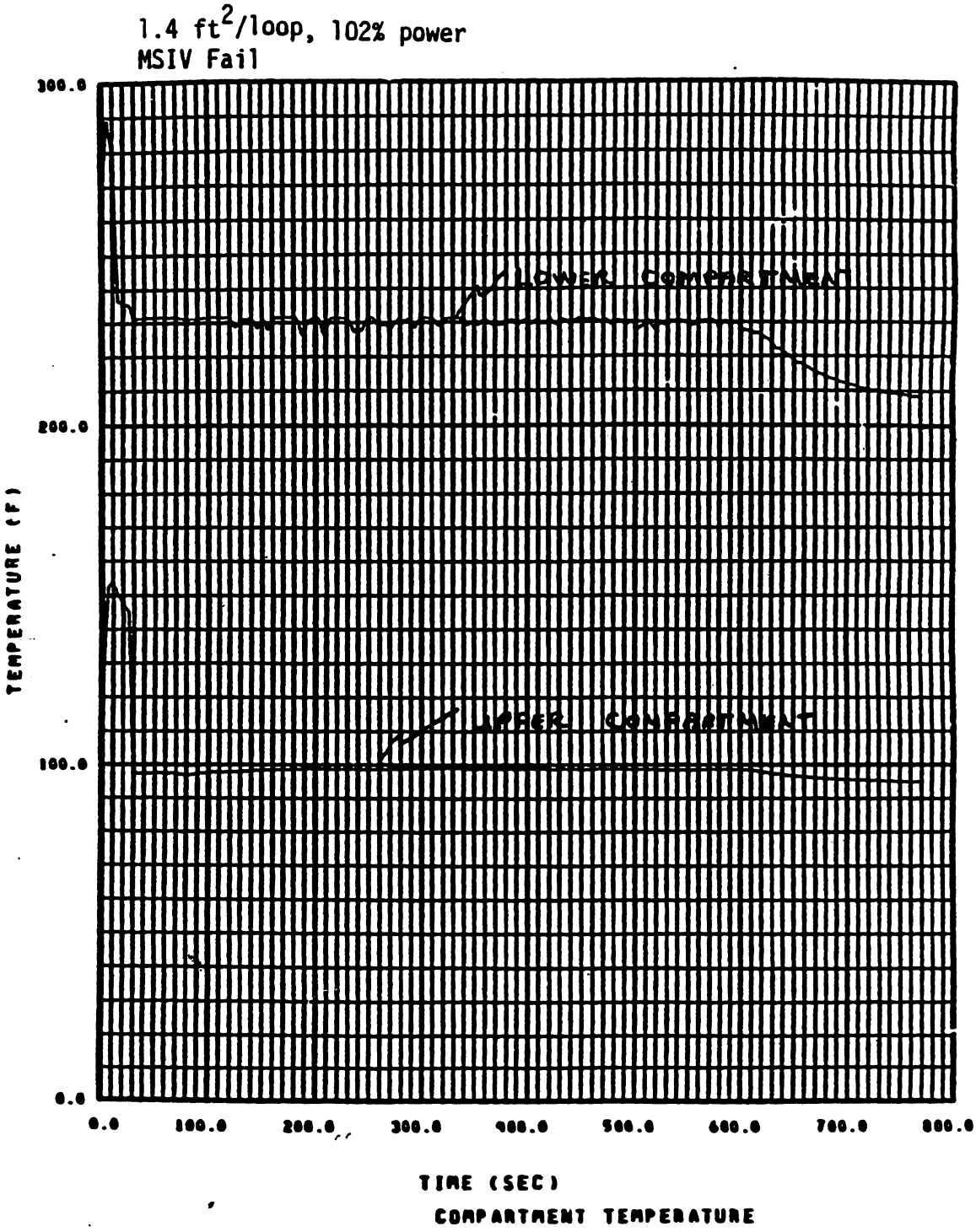

FIGURE 6.2.1-64 Containment Temperature Versus Time For Break @ 102% Power

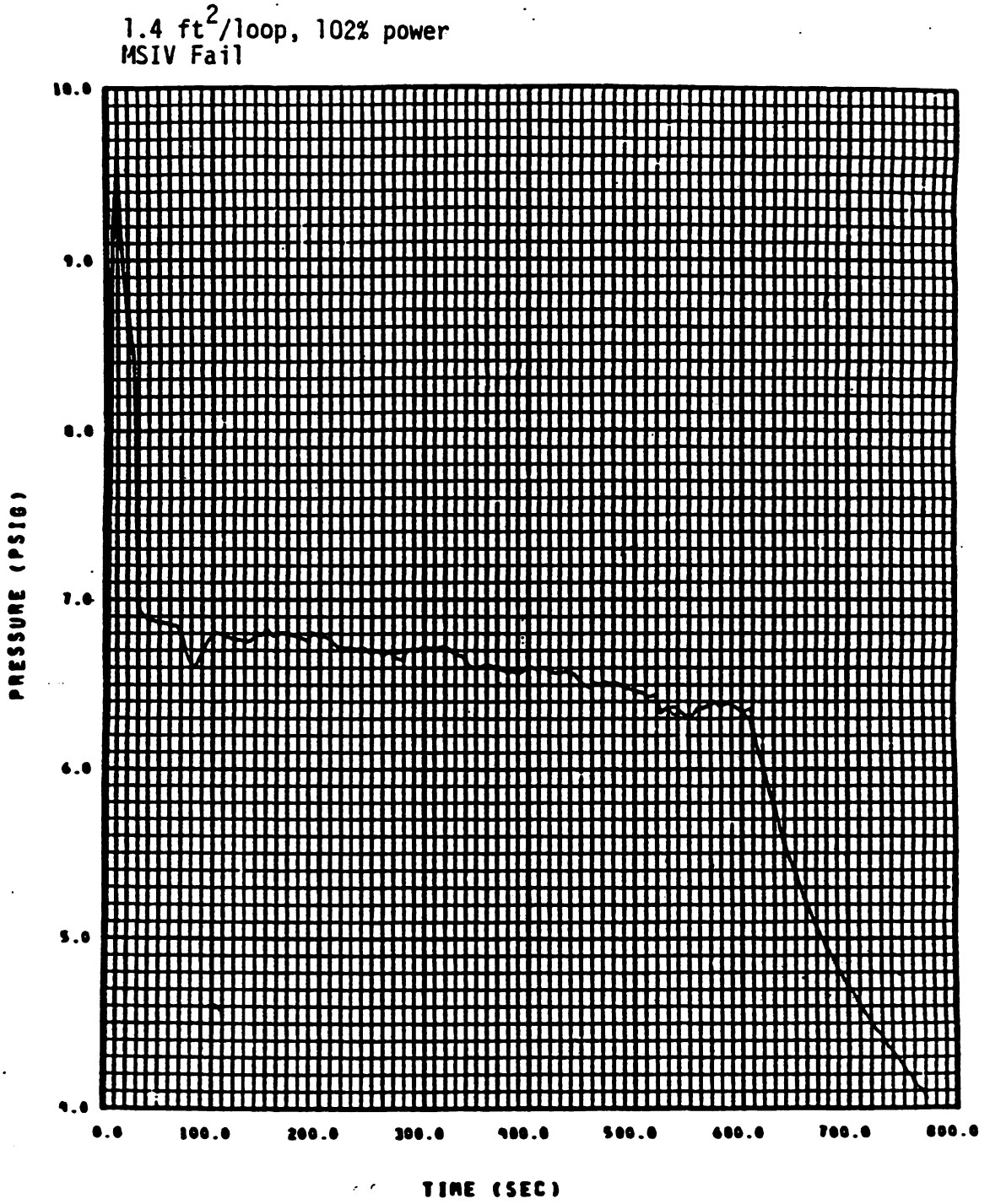

LOWER COMPARTMENT PRESSURE

FIGURE 6.2.1-65 Lower Compartment Containment Pressure Versus Time for Break At 102% Power

0.35 FT^2 Split, 30% Power AFW-Runout

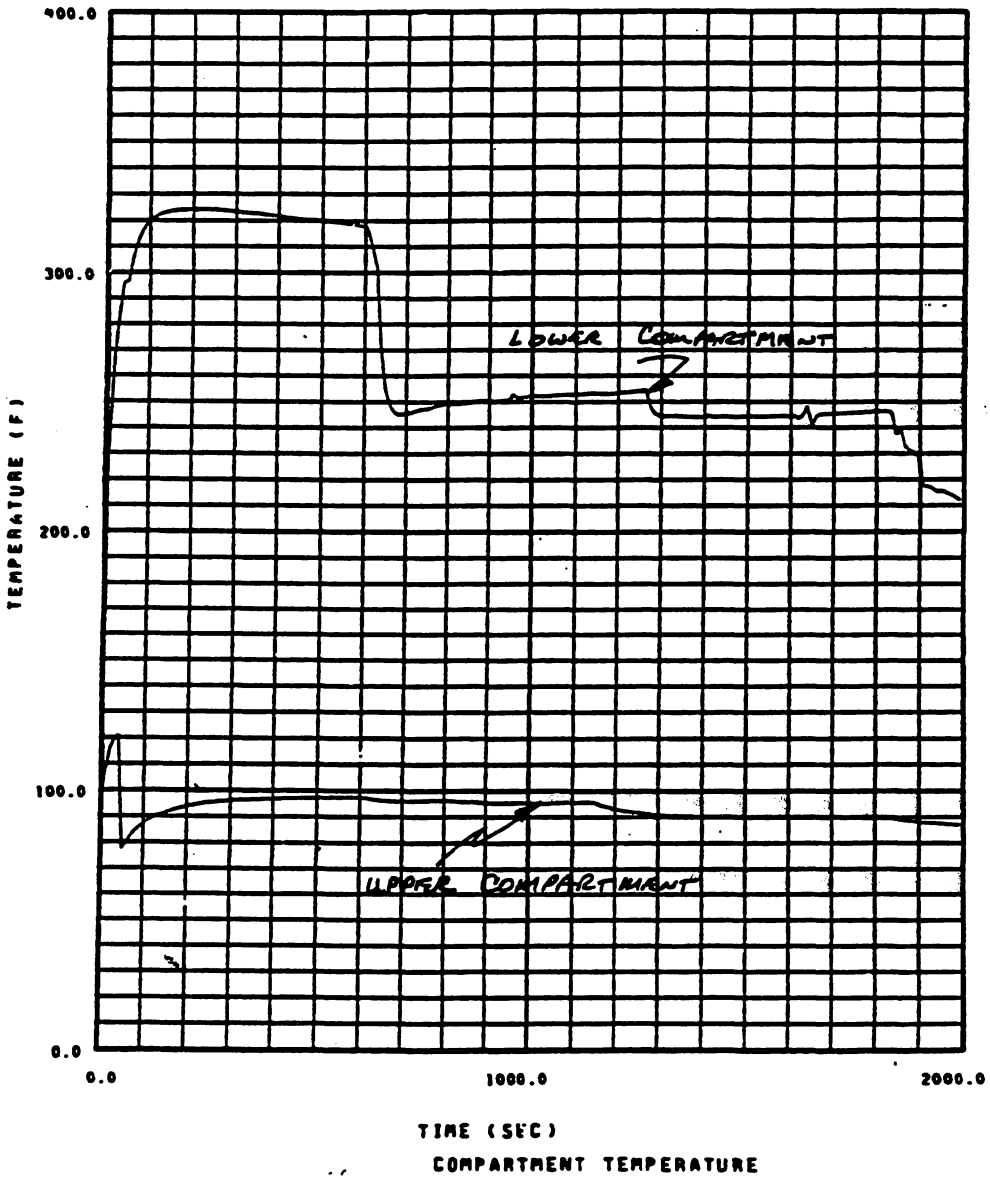

FIGURE 6.2.1-66 Containment Temperature Versus Time For Break @ 30% Power

Best Available Historical Image

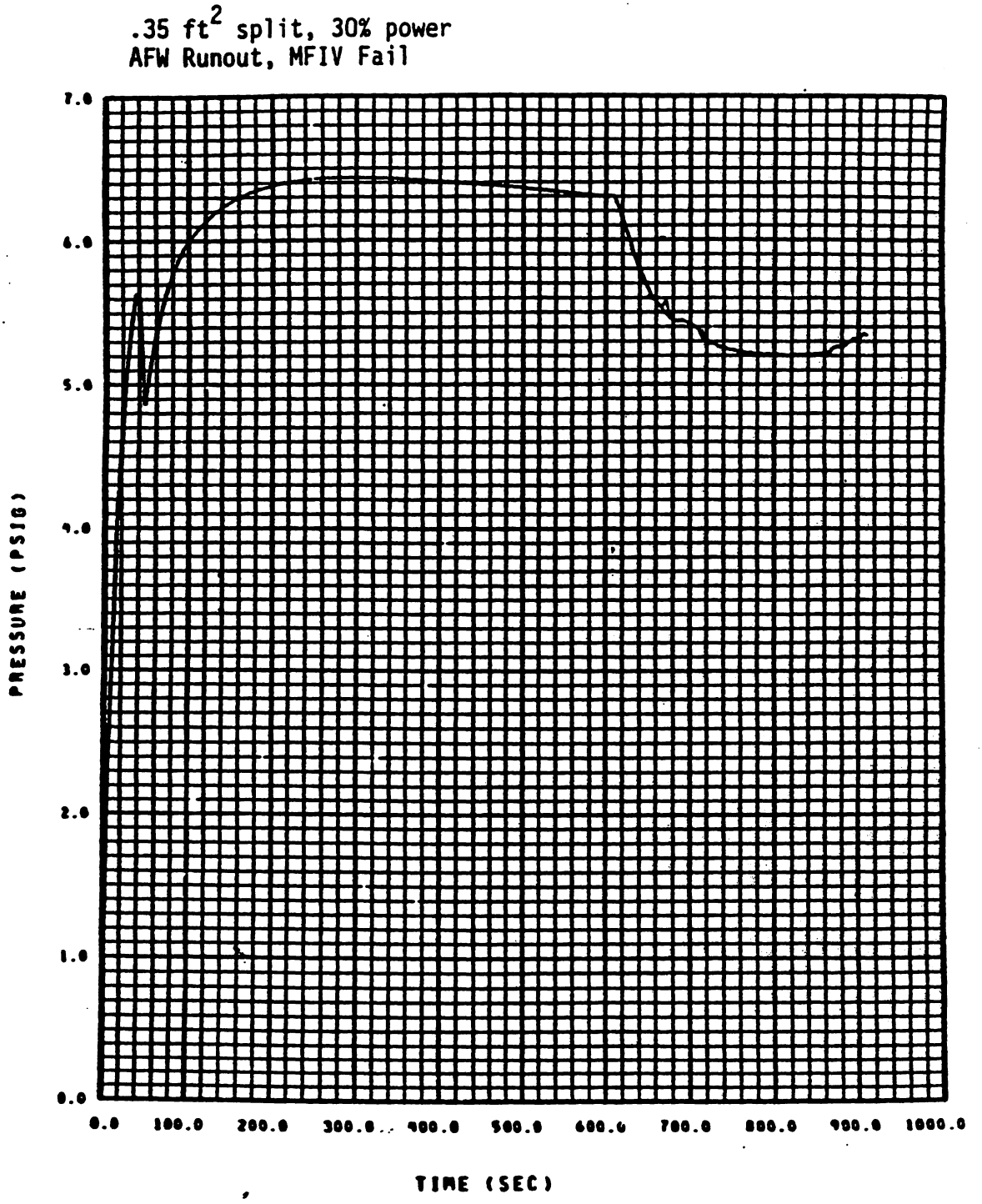

FIGURE 6.2.1-67 Compartment Pressure Versus Time for Break @ 30% Power

Best Available Historical Image

0.6 FT^2 Split, 30% Power AFW Runout

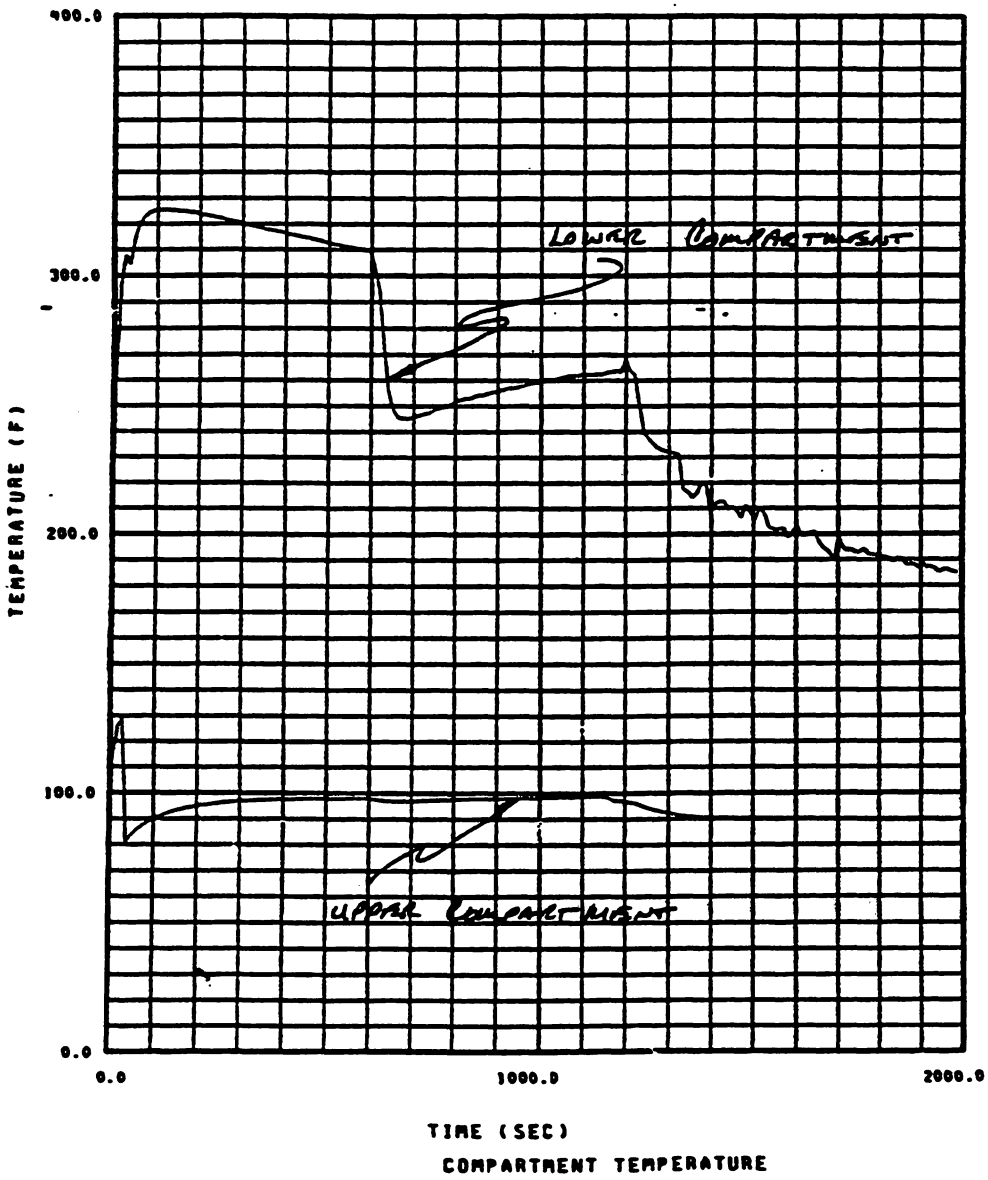

FIGURE 6.2.1-68 Containment Temperature Versus Time For Break @ 30% Power

Best Available Historical Image

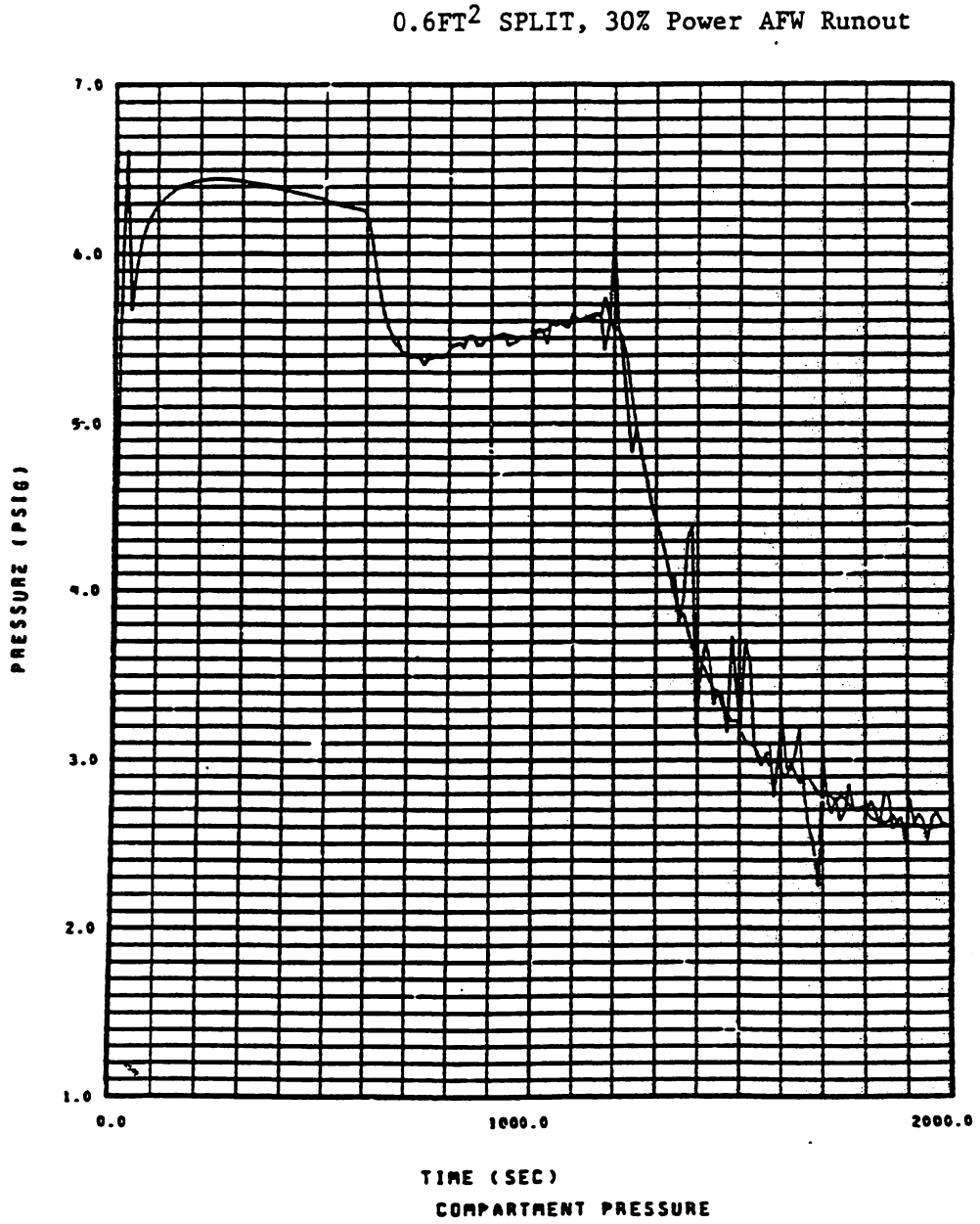

FIGURE 6.2.1-69 Lower Compartment Containment Pressure Versus Time For Break @ 30% Power

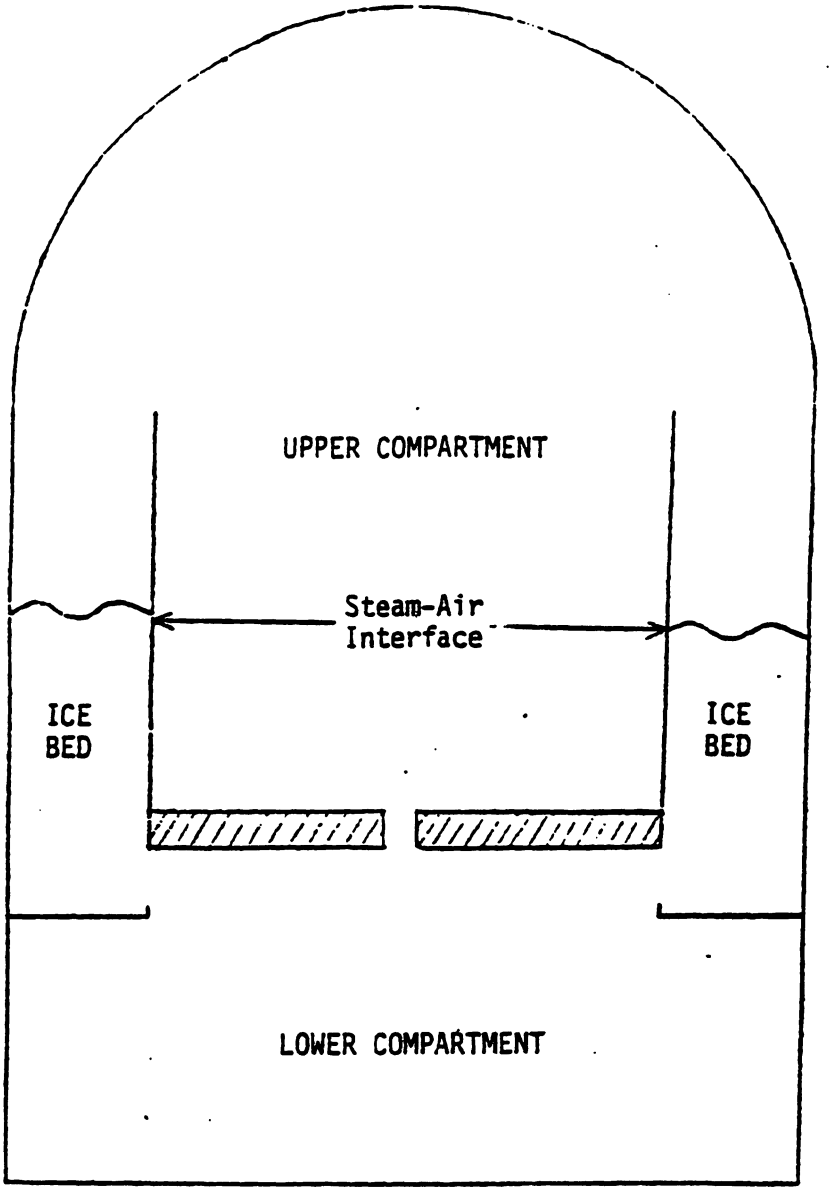

FIGURE 6.2.1-70 Maximum Reverse Pressure Differential Containment Model

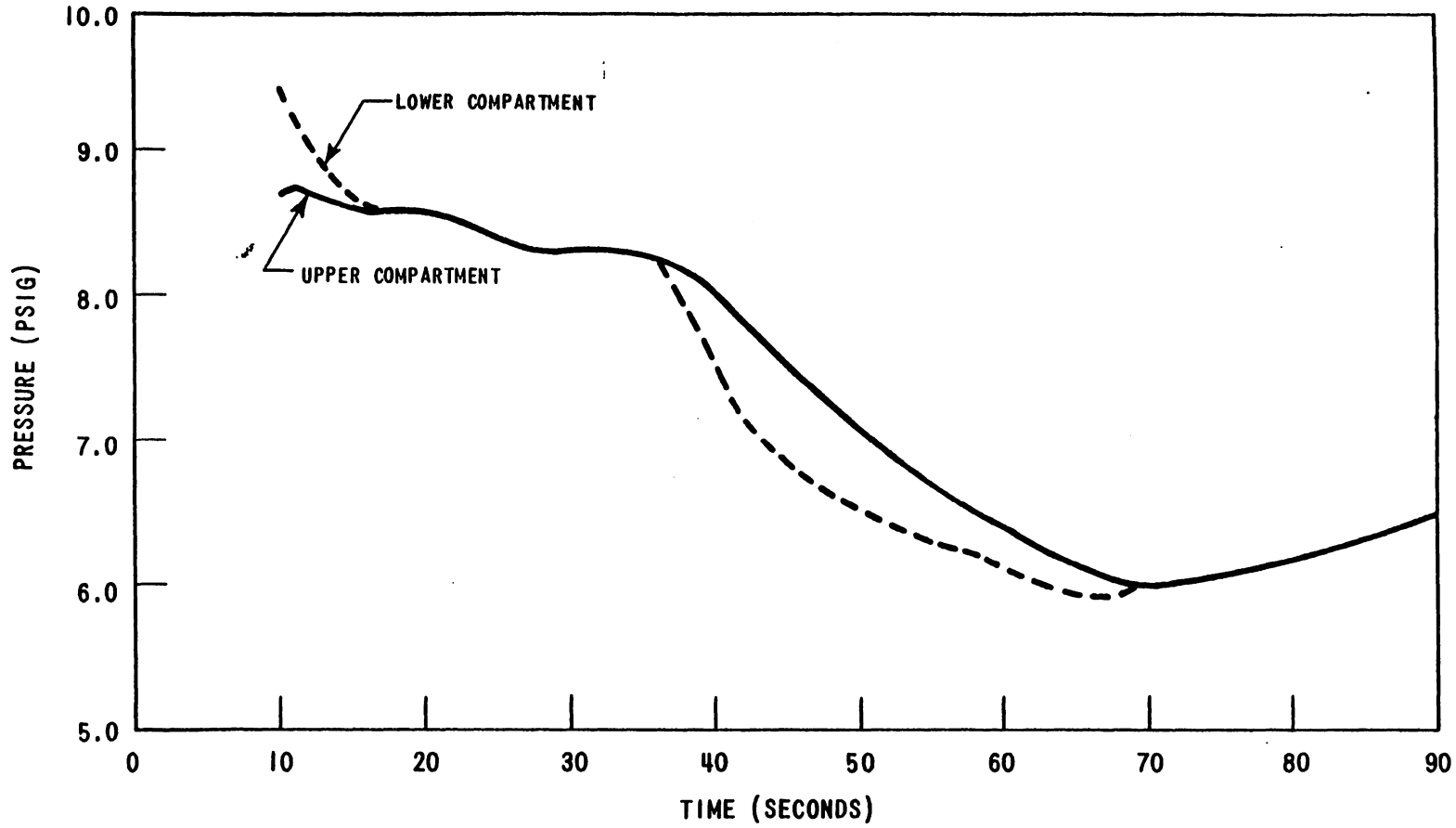

FIGURE 6.2.1-71 Upper and Lower Compartment Pressures From Maximum Reverse Pressure Differential Analysis

8964-4

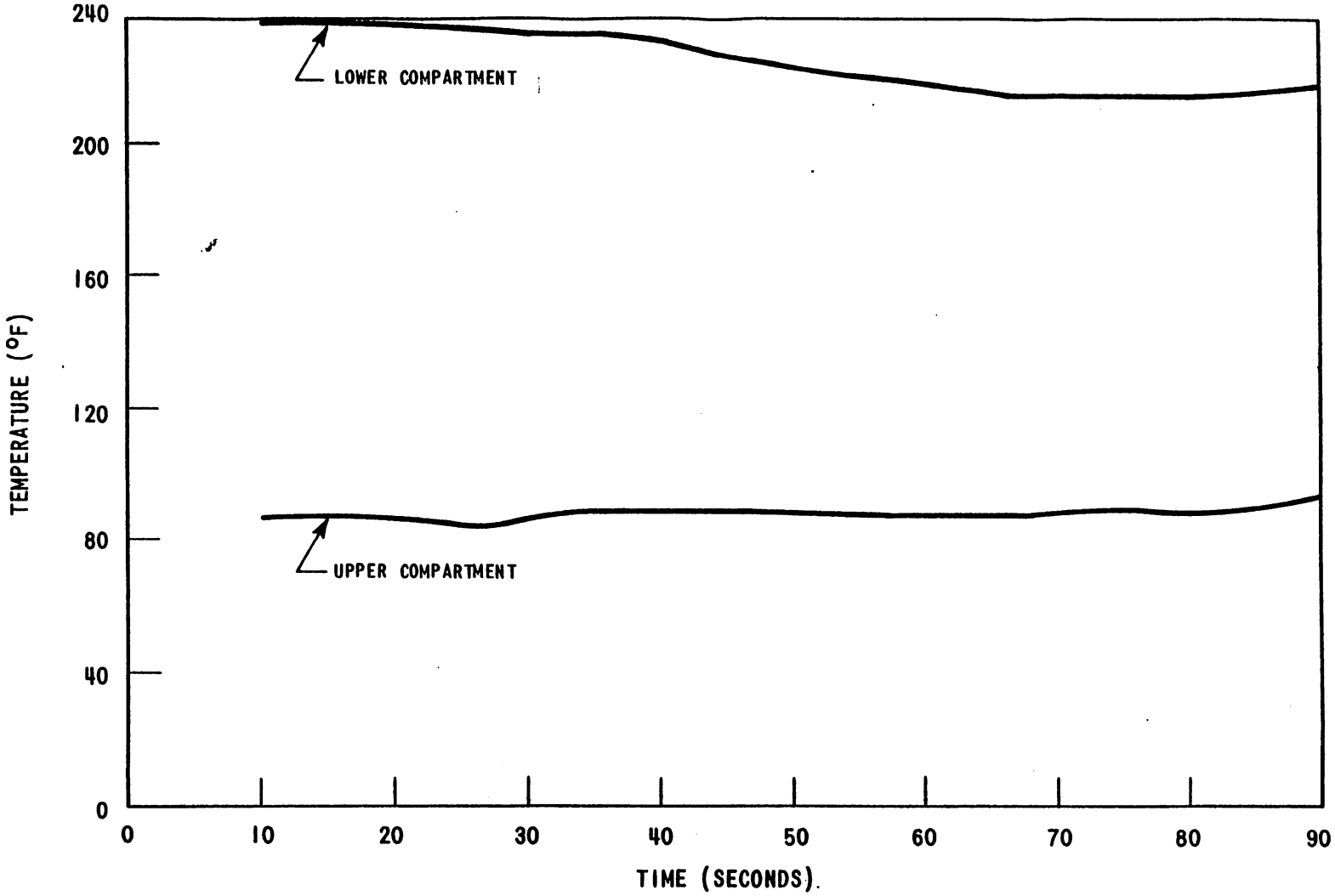

FIGURE 6.2.1-72 Upper and Lower Containment Temperatures From Maximum Reverse Pressure Differential Analysis

8964-3

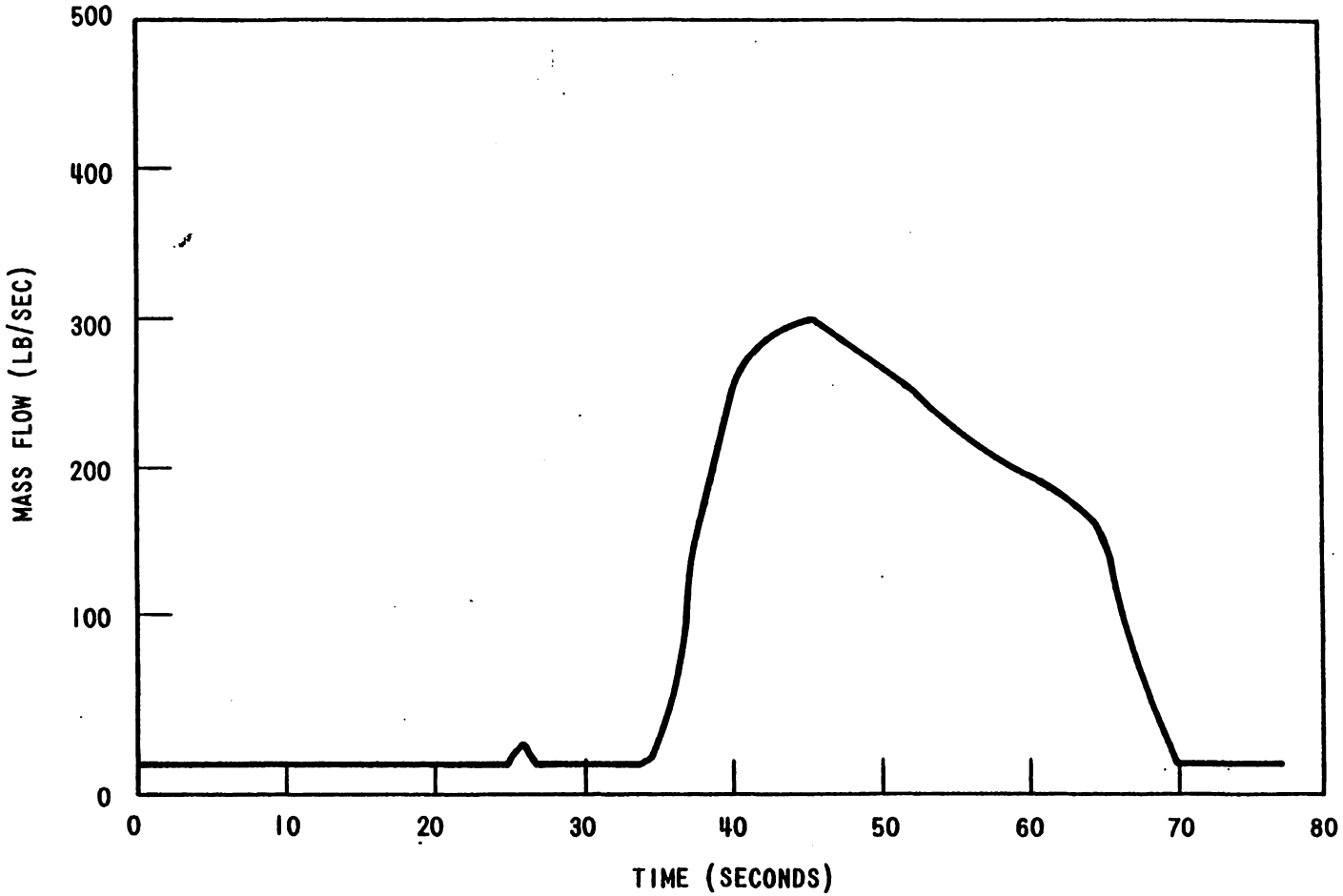

FIGURE 6.2.1-73 Upper to Lower Containment Flowrates From Maximum Reverse Pressure Differential Analysis

CASE 6- Maximum Reverse Pressure Differential Analysis

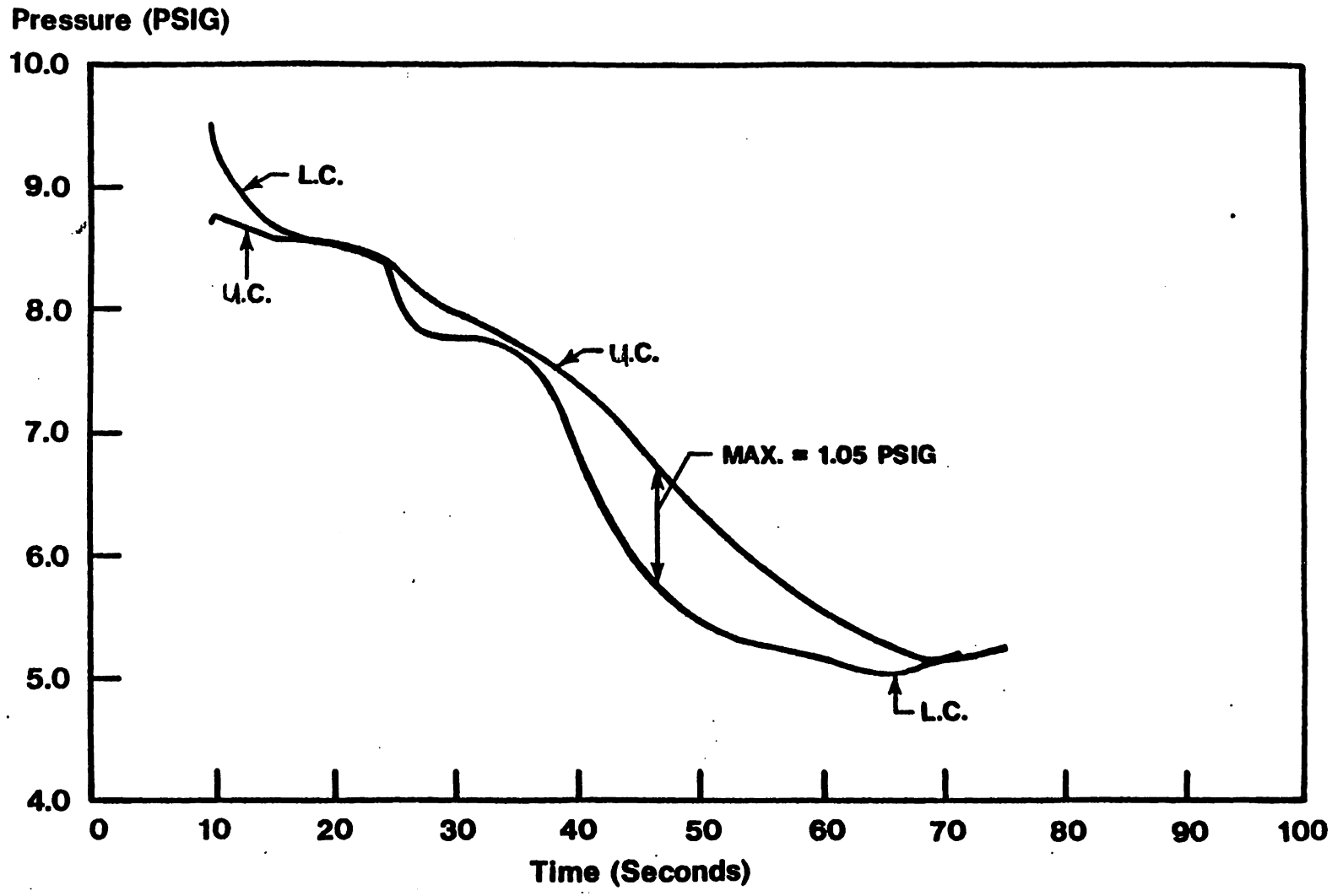

FIGURE 6.2.1-74

CASE 6- Maximum Reverse Pressure Differential Analysis

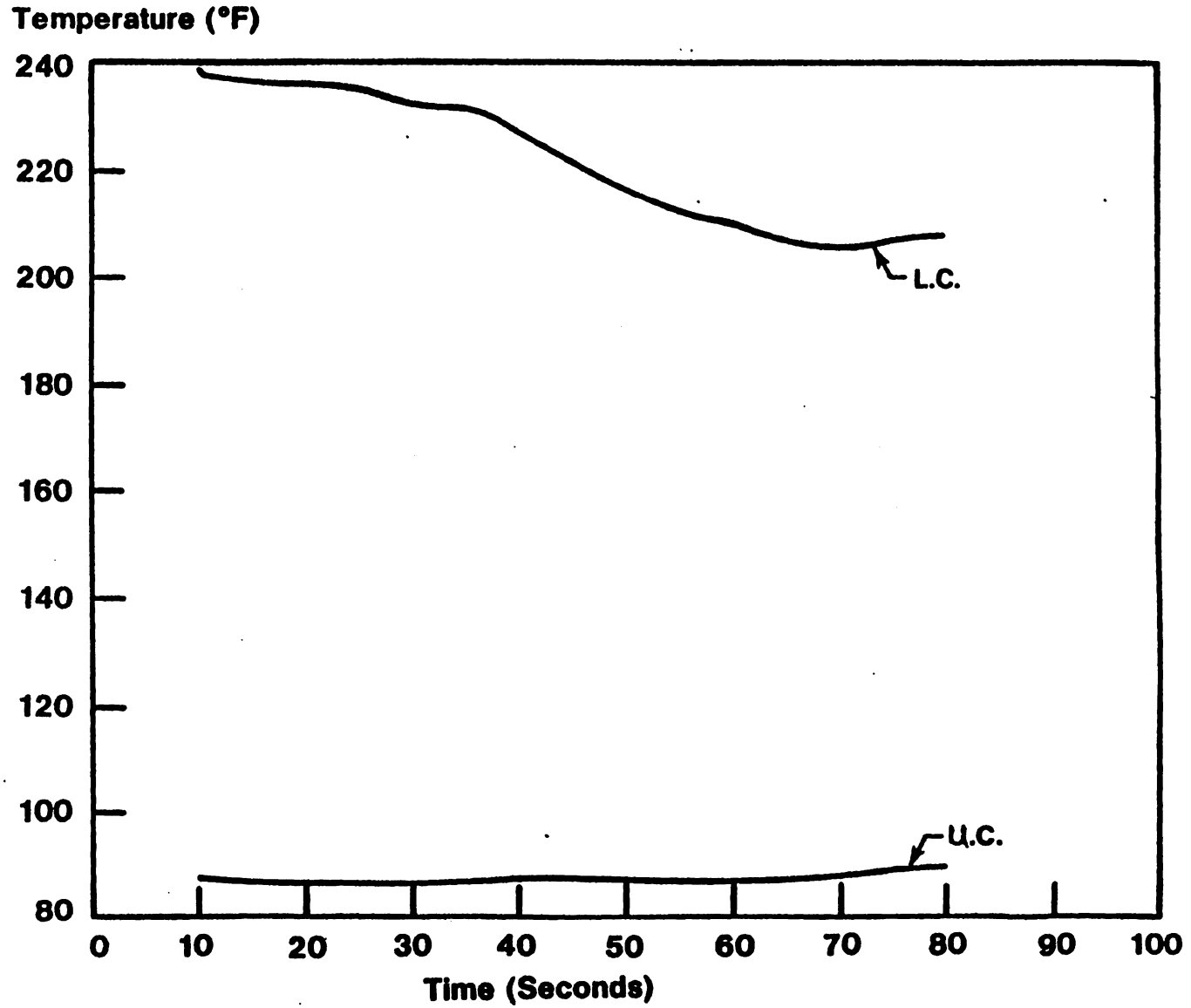

FIGURE 6.2.1-75

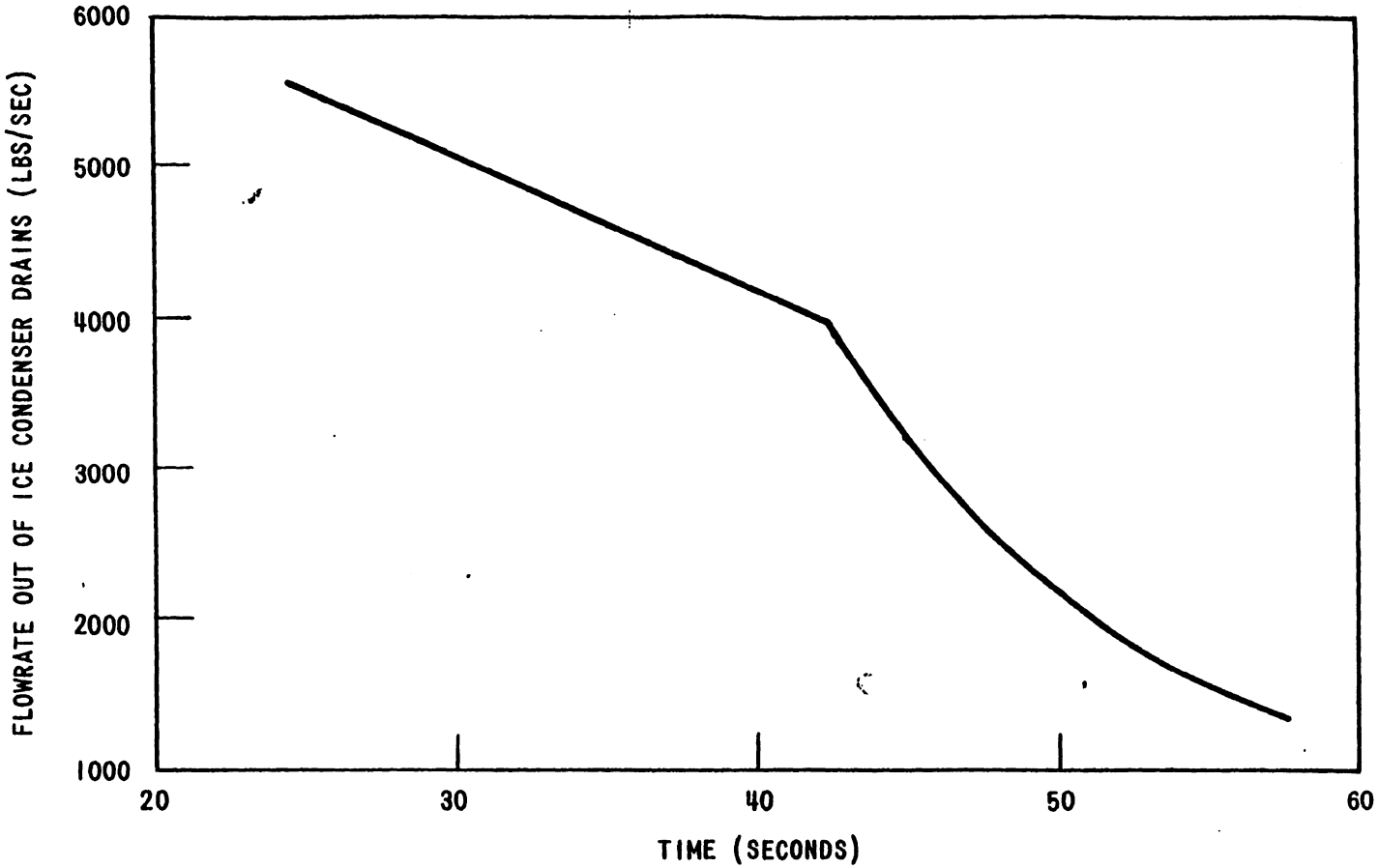

ICE CONDENSER DRAIN FLOW FOR MAXIMUM REVERSE DIFFERENTIAL ANALYSIS

FIGURE 6.2.1-76

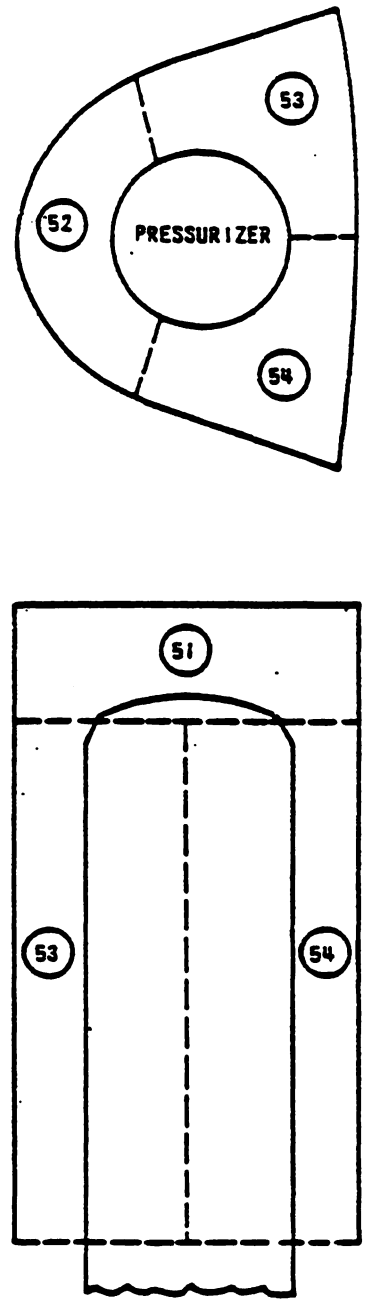

FIGURE 6.2.1-77

Nodalization of Pressurizer

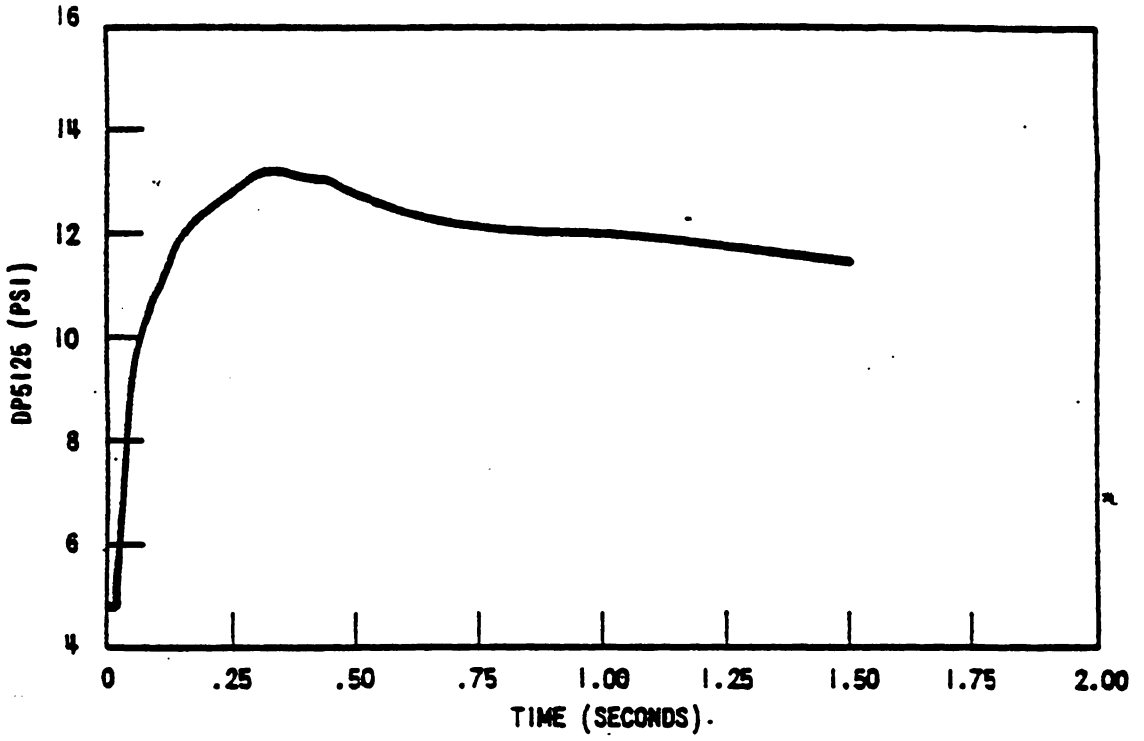

FIGURE 6.2.1-78

Pressure Transient Between Break Element and Upper Compartment

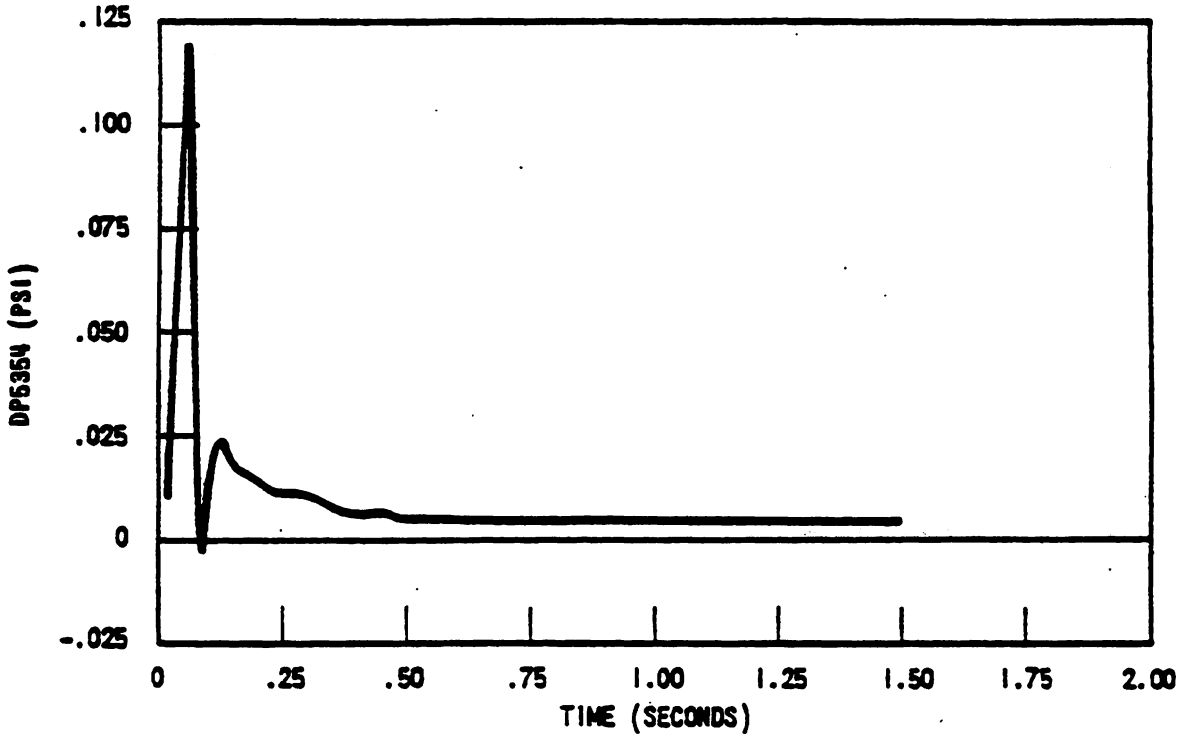

FIGURE 6.2.1-79

Pressure Differential Across the Pressurizer Vessel

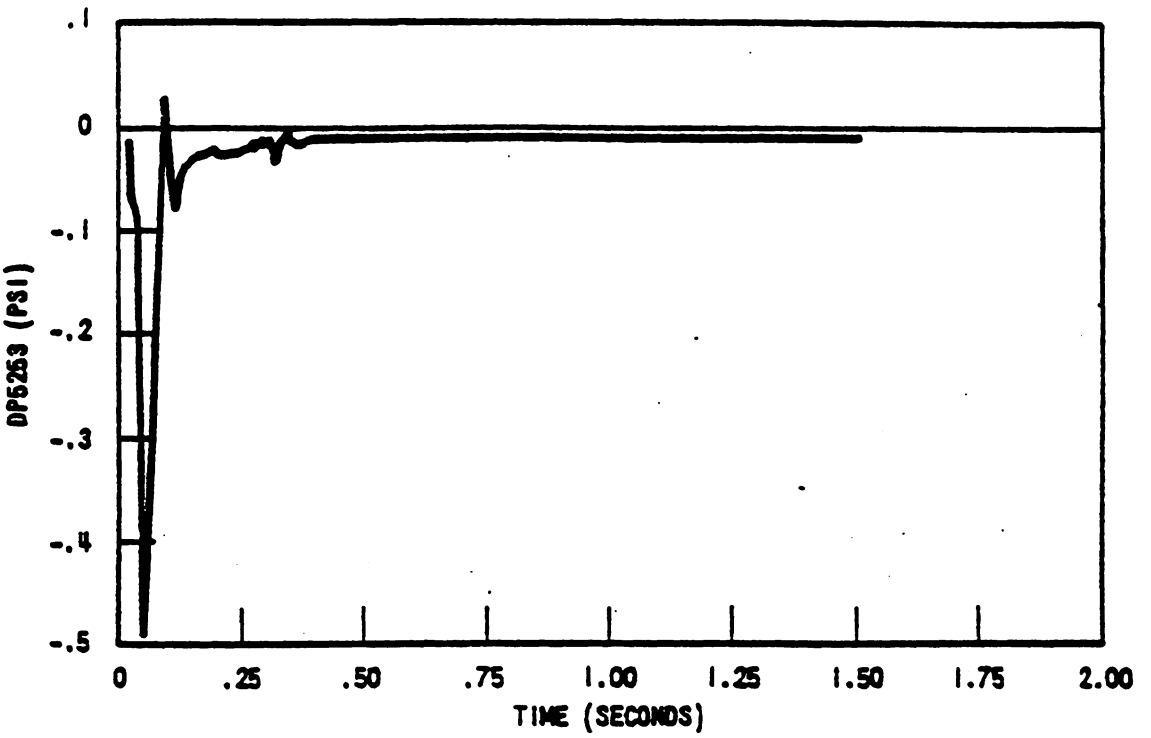

FIGURE 6.2.1-80

Pressure Differential Across the Pressurizer Vessel

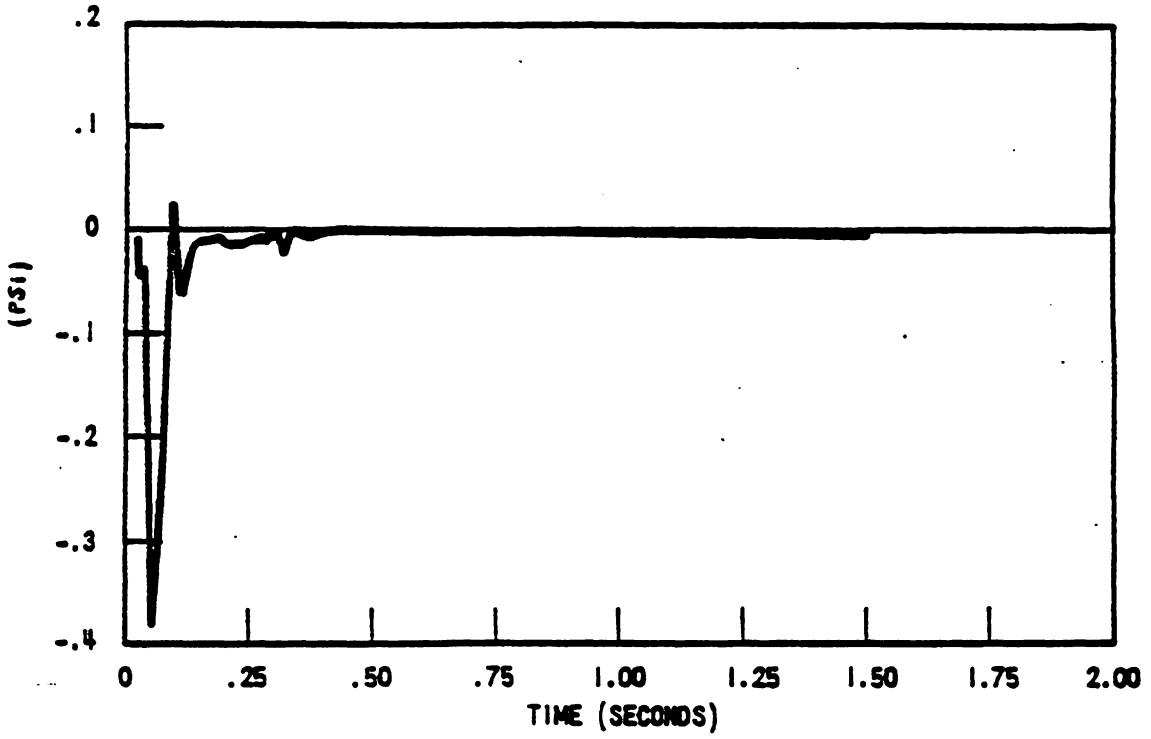

FIGURE 6.2.1-81

Pressure Differential Across the Pressurizer Vessel

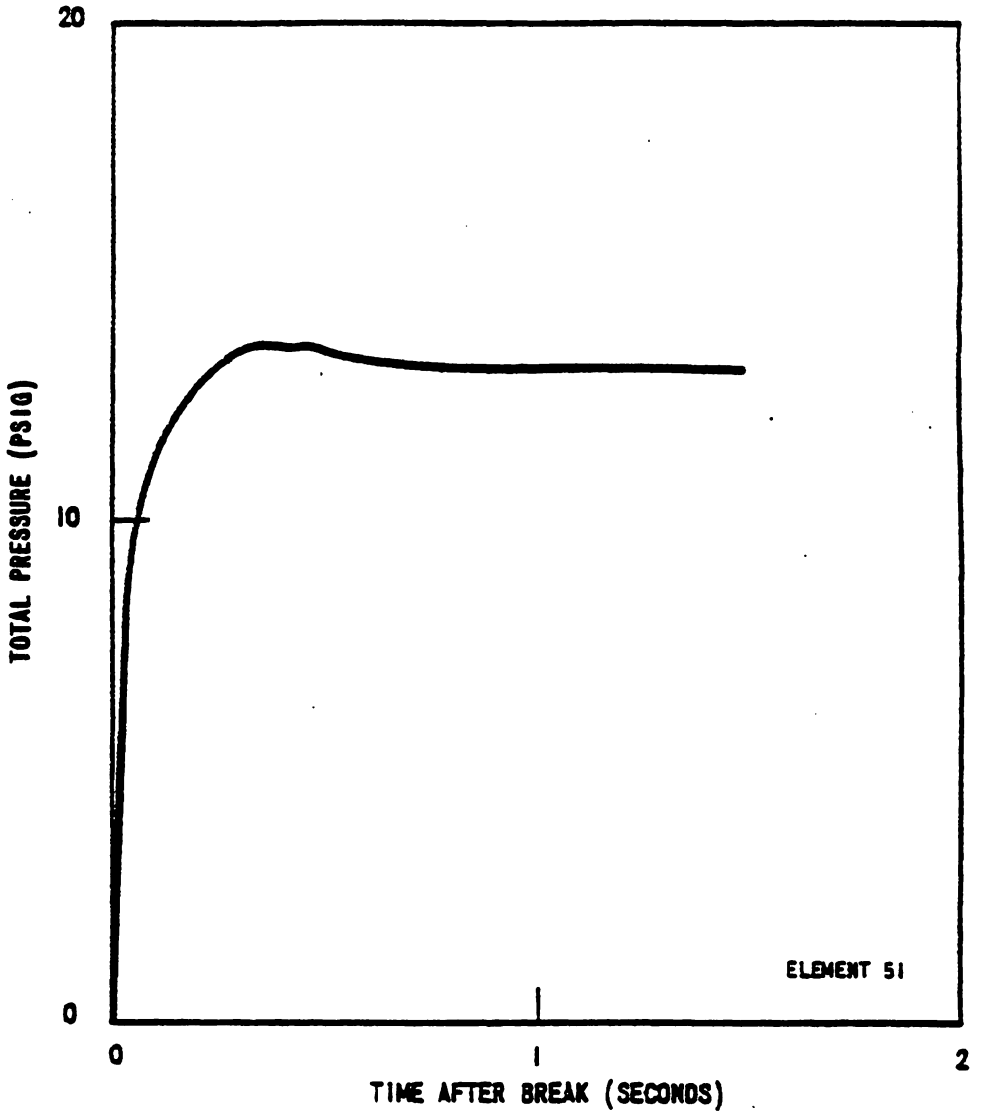

FIGURE 6.2.1-82

Pressure versus Time for the Break Element

Best Available Historical Image

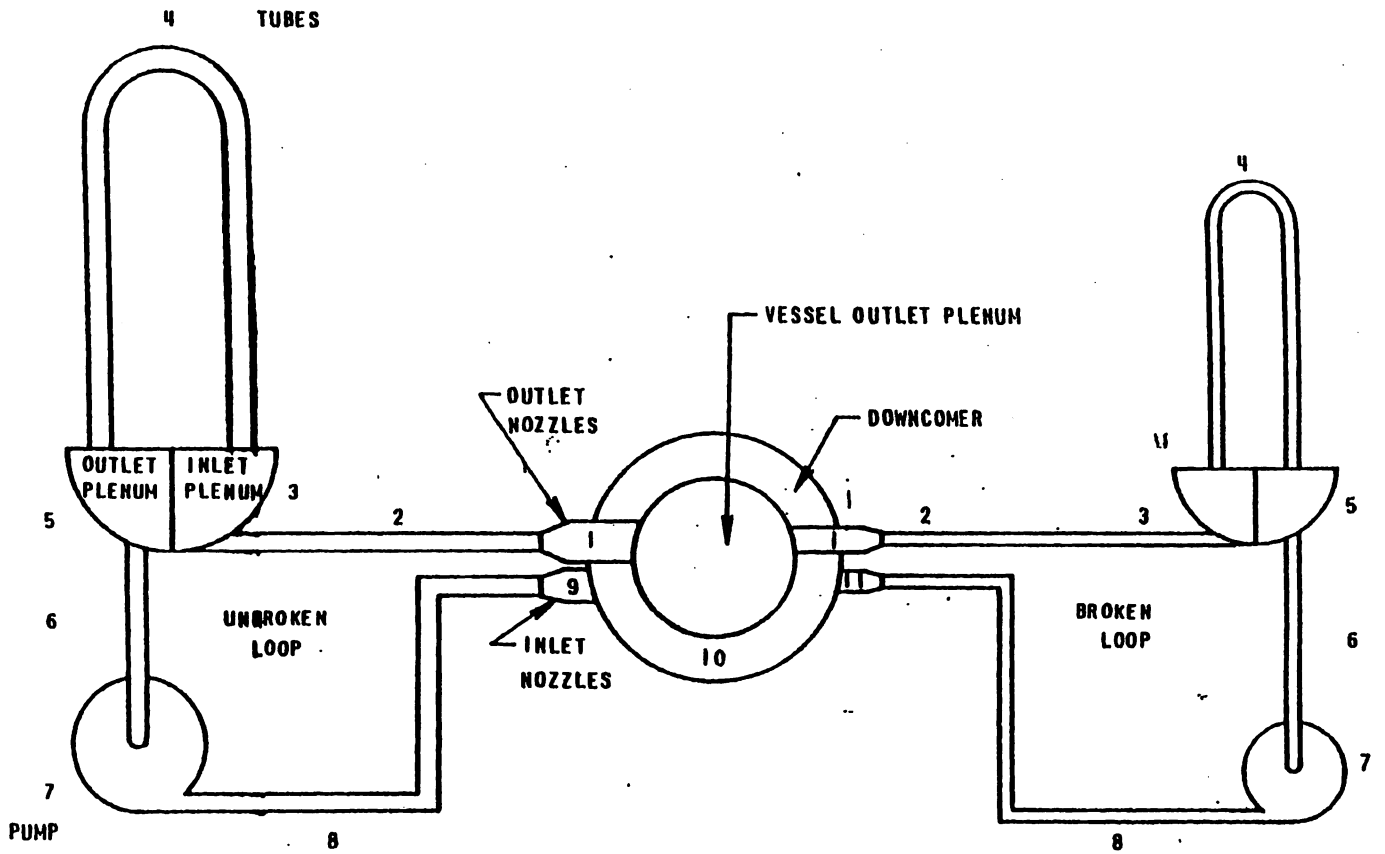

FIGURE 6.2.1-83 Schematic of REFLOOD Code 19 Element Loop Model

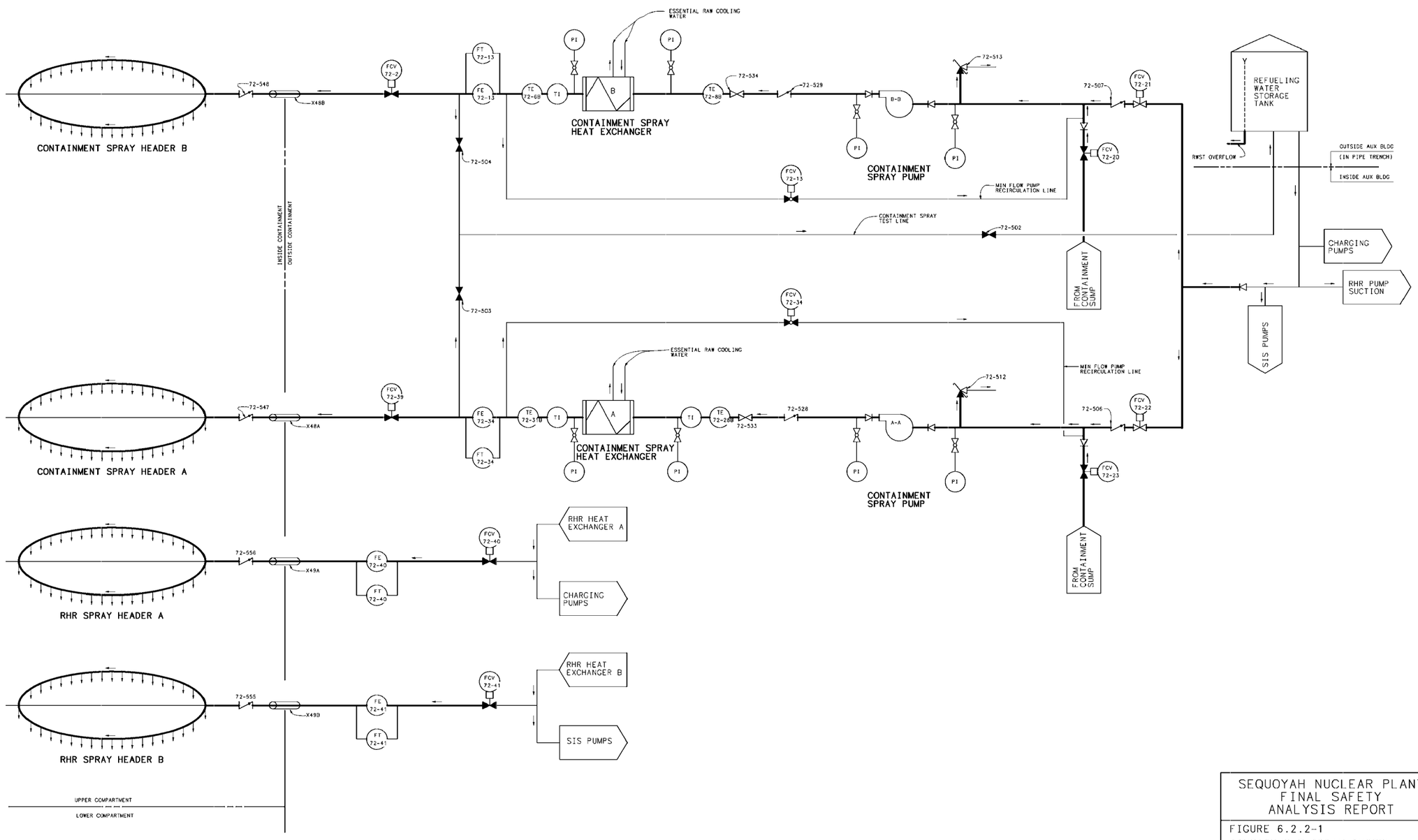

SEQUOYAH NUCLEAR PLANT
FINAL SAFETY
ANALYSIS REPORT

FIGURE 6.2.2-1
CONTAINMENT SPRAY SYSTEM
(REVISED BY AMENDMENT 15)

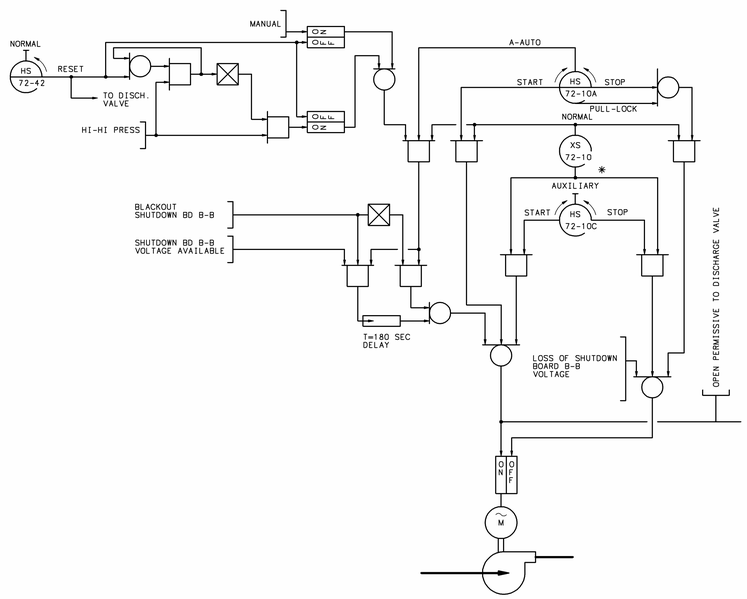

CONTAINMENT SPRAY PUMP B-B
LOGIC TYPICAL TO CONTAINMENT
SPRAY PUMP A-A

SEQUOYAH NUCLEAR PLANT
FINAL SAFETY
ANALYSIS REPORT

FIGURE 6.2.2-2
CONTAINMENT SPRAY PUMP LOGIC

(REVISED BY AMENDMENT 22)

CAD MAINTAINED DRAWING

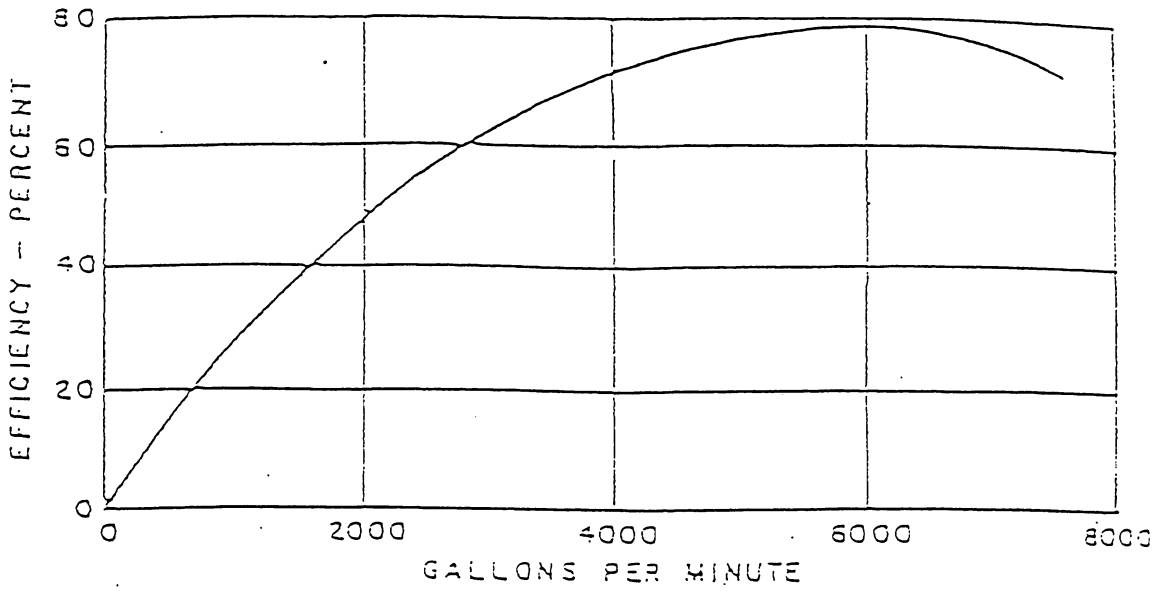

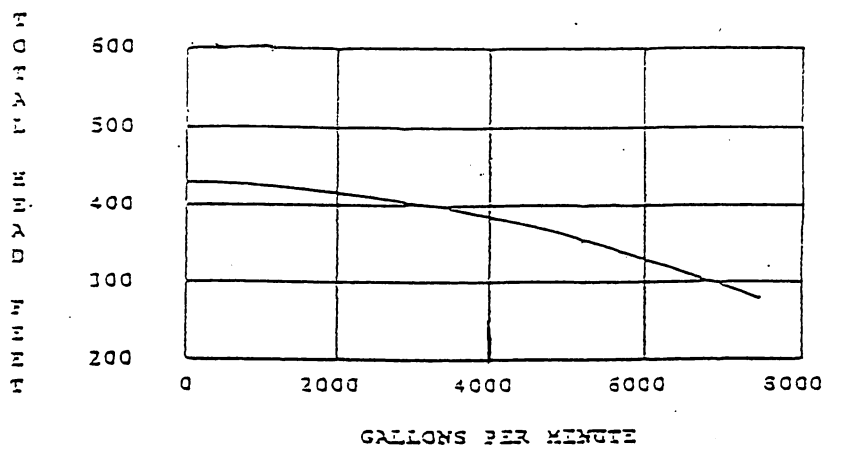

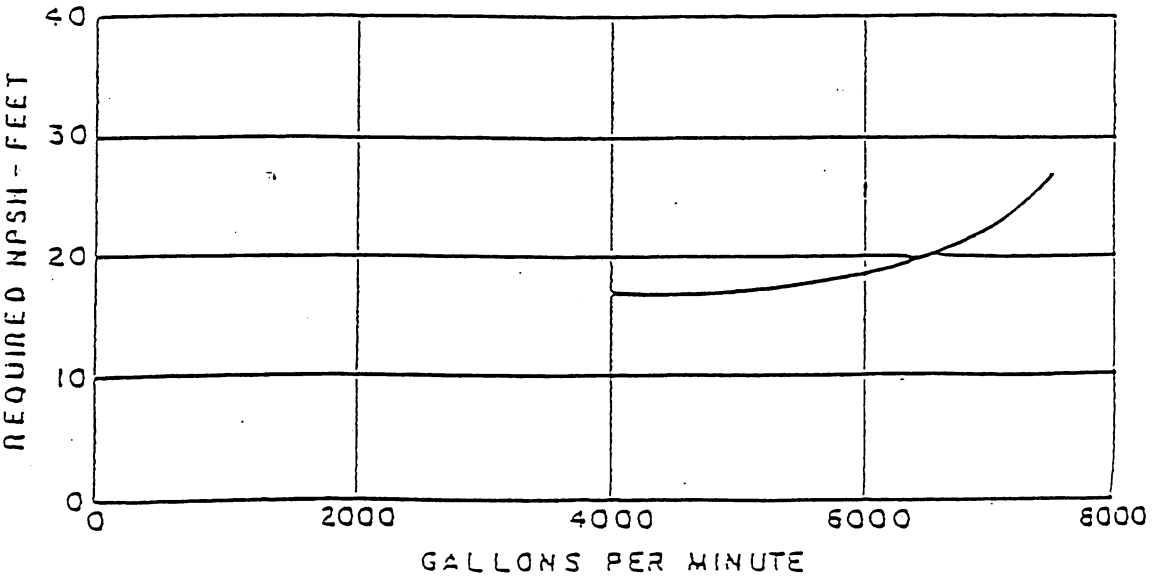

FIGURE 6.2.2-3 Containment Spray Pump Characteristics

Revised by Amendment 15

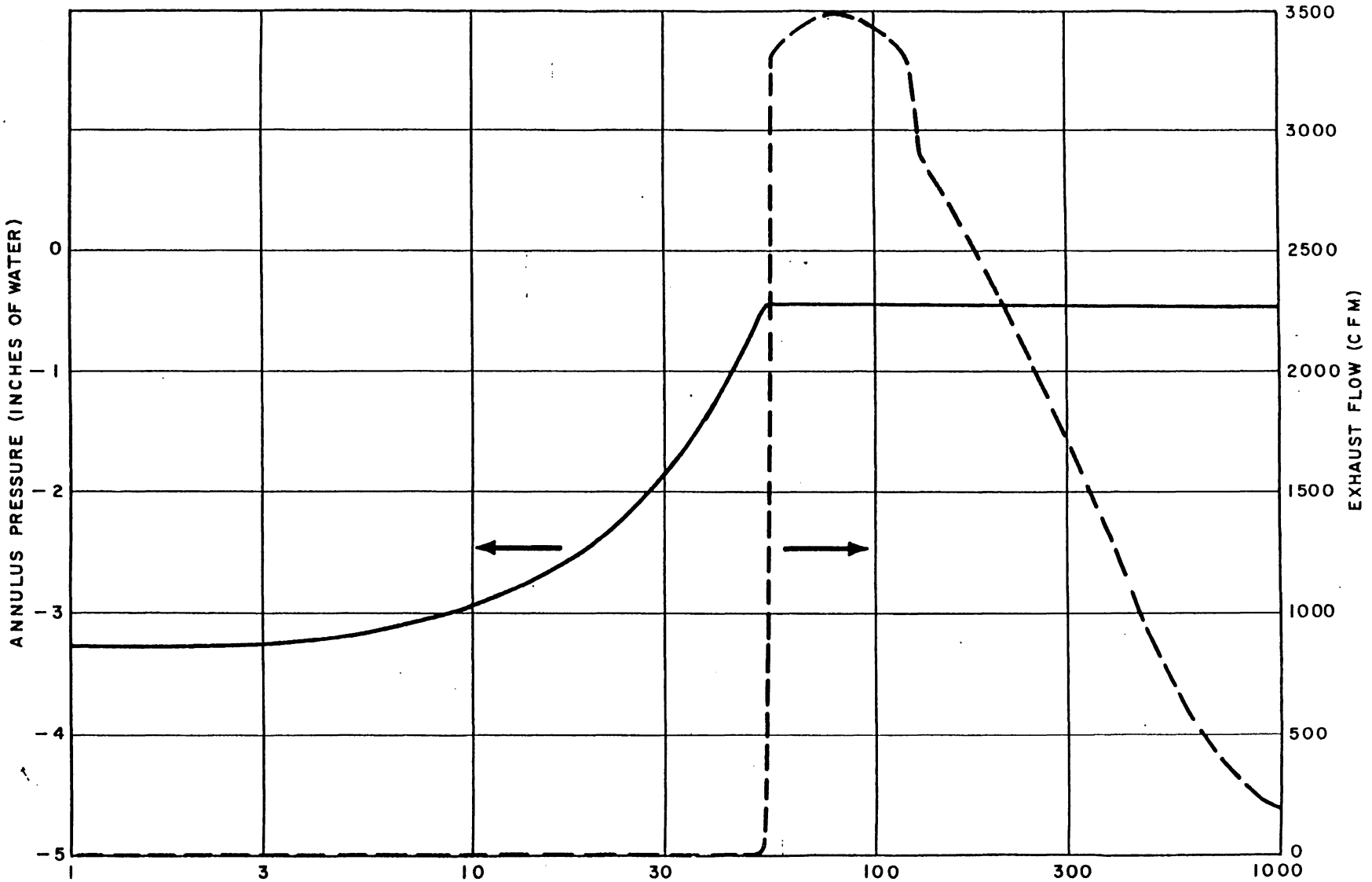

FIGURE 6.2.3-1 Post Accident Annulus Pressure and Reactor Unit Vent Flow Rate Transients

Revised by Amendment 13

CONTAINMENT PENETRATIONS	TVA VALVE FCV-NO. FSV-NO. IN-BOARD	OUT-BOARD	CONTAINMENT VENT ISOLATION	CONTAINMENT ISOLATION PHASE A	CONTAINMENT ISOLATION PHASE B	REMOTE-MANUAL
MAIN STEAM LOOP 1		1-4,5,15,147				X
STEAM GEN BLOW DN LOOP 1		1-7,43-55		X		
MAIN STEAM LOOP 2		1-11,12,148				X
STEAM GEN BLOW DN LOOP 2		1-14,43-58		X		
MAIN STEAM LOOP 3		1-22,23,149				X
STEAM GEN BLOW DN LOOP 3		1-25,43-61		X		
MAIN STEAM LOOP 4		1-29,30,16,150				X
STEAM GEN BLOW DN LOOP 4		1-32,43-64		X		
MAIN & AUX FEEDWATER LOOP 1		3-33,164,164A,174				X
MAIN FEEDWATER LOOP 2		3-47				X
MAIN FEEDWATER LOOP 3		3-87				X
MAIN & AUX FEEDWATER LOOP 4		3-100,171,171A,175				X
AUX FEEDWATER LOOP 3		3-148,148A,172				X
AUX FEEDWATER LOOP 2		3-156,156A,173				X
FIRE PROTECTION CNTMT STANDPIPE	CK VLV	26-240		X		
FIRE PROTECTION RCP	CK VLV	26-243		X		
UPPER COMPT PURGE AIR SUP	30-8	30-7	X			
UPPER COMPT PURGE AIR SUP	30-10	30-9	X			
LOWER COMPT PURGE AIR SUP	30-15	30-14	X			
LOWER COMPT PURGE AIR SUP	30-17	30-16	X			
INSTR ROOM PURGE AIR SUP	30-20	30-19	X			
LOWER COMPT PRESSURE RELIEF	30-40	30-37	X			
VACUUM RELIEF ISOLATION VALVE		30-46,CK VLV				X
VACUUM RELIEF ISOLATION VALVE		30-47,CK VLV				X
VACUUM RELIEF ISOLATION VALVE		30-48,CK VLV				X
UPPER COMPT PURGE AIR EXH	30-50	30-51	X			
UPPER COMPT PURGE AIR EXH	30-52	30-53	X			
LOWER COMPT PURGE AIR EXH	30-56	30-57	X			
INSTR ROOM PURGE AIR EXH	30-58	30-59	X			
CNTMT PRESS TRANSMITTER	30-134	30-135		X		
CW-INSTR ROOM CLRS RETURN	31C-223	31C-222		X		
CW-INSTR ROOM CLRS SUPPLY	31C-225	31C-224		X		
CW-INSTR ROOM CLRS RETURN	31C-230	31C-229		X		
CW-INSTR ROOM CLRS SUPPLY	31C-232	31C-231		X		
CONTROL AIR TRAIN A	CK VLV	NOTE 1			X	
CONTROL AIR TRAIN B	CK VLV	NOTE 2			X	
CONTROL AIR NON-ESSENTIAL	CK VLV	NOTE 3			X	
SAMP-PZR STEAM	43-2	43-3		X		
SAMP-PZR LIQUID	43-11	43-12		X		
SAMP-RC HOT LEGS 2 & 3	43-22	43-23		X		
ACCUM SAMPLE	43-34	43-35		X		
H_2 ANALYZER SUP-TR B	43-201	NOTE 4				X
H_2 ANALYZER RET-TR B	43-202	NOTE 5				X
H_2 ANALYZER SUP-TR A	43-207	NOTE 6				X
H_2 ANALYZER RET-TR A	43-208	NOTE 7				X
PAS-HOT LEG TRAIN A	43-251	43-250				X
PAS-CNTMT AIR INTK-TR A	43-288	43-287				X
PAS-AIR DISCHARGE TO CNTMT	CK VLV	43-307,335				X
PAS-HOT LEG TRAIN B	43-310	43-309				X
PAS-LIQ DISCHARGE TO CNTMT	CK VLV	43-317,341				X
PAS-CNTMT AIR INTK-TR B	43-319	43-318				X
GLYCOL INLET TO FLOOR COOLER	61-97	61-96		X		
GLYCOL OUTLET FROM FLOOR COOLER	61-122	61-110		X		
GLYCOL IN	61-192	61-191		X		
GLYCOL OUT	61-194	61-193		X		
FROM RC PUMP SEAL	62-61	62-63		X		
LETDOWN LINE	62-72,73,74	62-77		X		
NORMAL CHARGE LINE	CK VLV	62-90				X
SIS PUMP DISCHARGE	63-121,CK VLV	63-22				X
SIS-CHRG PUMP DISCH	63-174,CK VLV	63-25,26				X
WDS N_2 TO ACCUM	CK VLV	63-64		X		
ACCUM TO HOLD UP TANK	63-71	63-23,84		X		
SIS SUMP SUCTION TO RHR PMP A		63-72				X
SIS SUMP SUCTION TO RHR PMP B		63-73				X
LOW HD SIS-TR A	63-111,CK VLV	63-93				X
LOW HD SIS-TR B	63-112,CK VLV	63-94				X
SIS PMP 1A-A HOT LEG DISCH	63-21,CK VLV	63-156				X
SIS PMP 1B-B HOT LEG DISCH	63,167,CK VLV	63-157				X
RHR HOT LEG INJ	63-158,172					X
ERCW-LOWER CMPT CLRS SUP-TR B	67-89	67-83			X	
ERCW-LOWER CMPT CLRS RET-TR A	67-87	67-88			X	
ERCW-LOWER CMPT CLRS SUP-TR B	67-90	67-91			X	
ERCW-LOWER CMPT CLRS RET-TR A	67-95	67-96			X	
ERCW-LOWER CMPT CLRS SUP-TR A	67-105	67-99			X	
ERCW-LOWER CMPT CLRS RET-TR B	67-103	67-104			X	
ERCW-LOWER CMPT CLRS SUP-TR A	67-106	67-107			X	
ERCW-LOWER CMPT CLRS RET-TR A	67-111	67-112			X	
ERCW-UPPER CMPT CLRS SUP-TR A	CK VLV	67-130			X	
ERCW-UPPER CMPT CLRS RET-TR A	67-295	67-131			X	
ERCW-UPPER CMPT CLRS SUP-TR A	CK VLV	67-133			X	
ERCW-UPPER CMPT CLRS RET-TR A	67-296	67-134			X	
ERCW-UPPER CMPT CLRS SUP-TR B	CK VLV	67-138			X	
ERCW-UPPER CMPT CLRS RET-TR B	67-297	67-139			X	
ERCW-UPPER CMPT CLRS SUP-TR B	CK VLV	67-141			X	
ERCW-UPPER CMPT CLRS RET-TR B	67-298	67-142			X	
WDS N_2 TO PRT	CK VLV	68-305		X		
PRT TO GAS ANALYZER	68-308	68-307		X		
CCS FROM EXCESS LT DN HX		70-85		X		
RCP THERMAL BARRIER RET	70-87	70-90			X	
CCS FROM RC PUMP OIL COOLERS	70-89	70-92			X	
RCP THERMAL BARRIER SUPPLY	CK VLV	70-134			X	
CCS TO RC PUMP OIL COOLERS	70-141	70-140			X	
EXCESS LT DN HX SUPPLY		70-143		X		
CONTAINMENT SPRAY HDR TRAIN B	CK VLV	72-2				X
CONTAINMENT SPRAY HDR TRAIN A	CK VLV	72-39				X
RHR SPRAY HDR-TR A	CK VLV	72-40				X
RHR SPRAY HDR-TR B	CK VLV	72-41				X
RHR SUPPLY	74-2					X
RC DRAIN TK PUMP DISCH	77-5	77-10		X		
RC DRAIN TK & PRT TO VENT HDR	77-18	77-19, 20		X		
FLOOR SUMP PUMP DISCH	77-127	77-128		X		
PRIMARY WATER PRT MAKE-UP	CK VLV	81-12		X		
CNTMT BLDG LWR CMPT AIR MON INTK	90-108,109	90-107	X			
CNTMT BLDG LWR CMPT AIR MON RET	90-110	90-111	X			
CNTMT BLDG UP COMPT AIR MON INTK	90-114,115	90-113	X			
CNTMT BLDG UP COMPT AIR MON RET	90-116	90-117	X			

NOTE 1: 1-32-80, 2-32-81
NOTE 2: 1-32-102, 2-32-103
NOTE 3: 1-32-110, 2-32-111
NOTE 4: 1-43-450, 2-43-2001
NOTE 5: 1-43-451, 2-43-200A
NOTE 6: 1-43-452, 2-43-210A
NOTE 7: 1-43-453, 2-43-210I

UNIT 2 ONLY

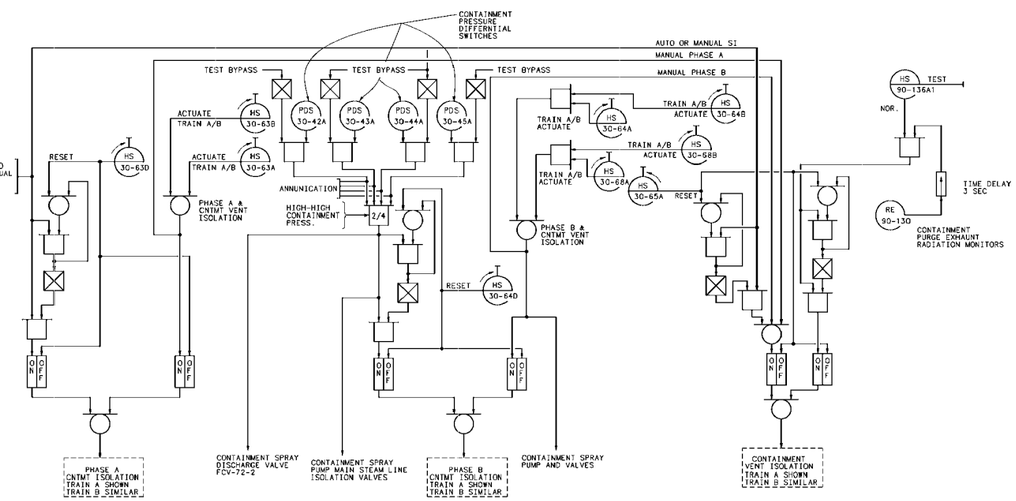

NOTES:
1. LOGIC SHOWN IS TYPICAL OF UNITS 1 AND 2.

SEQUOYAH NUCLEAR PLANT
FINAL SAFETY
ANALYSIS REPORT

FIGURE 6.2.4-1
MECHANICAL LOGIC DIAGRAM
CONTAINMENT ISOLATION
(REVISED BY AMENDMENT 18)

CAD MAINTAINED DRAWING

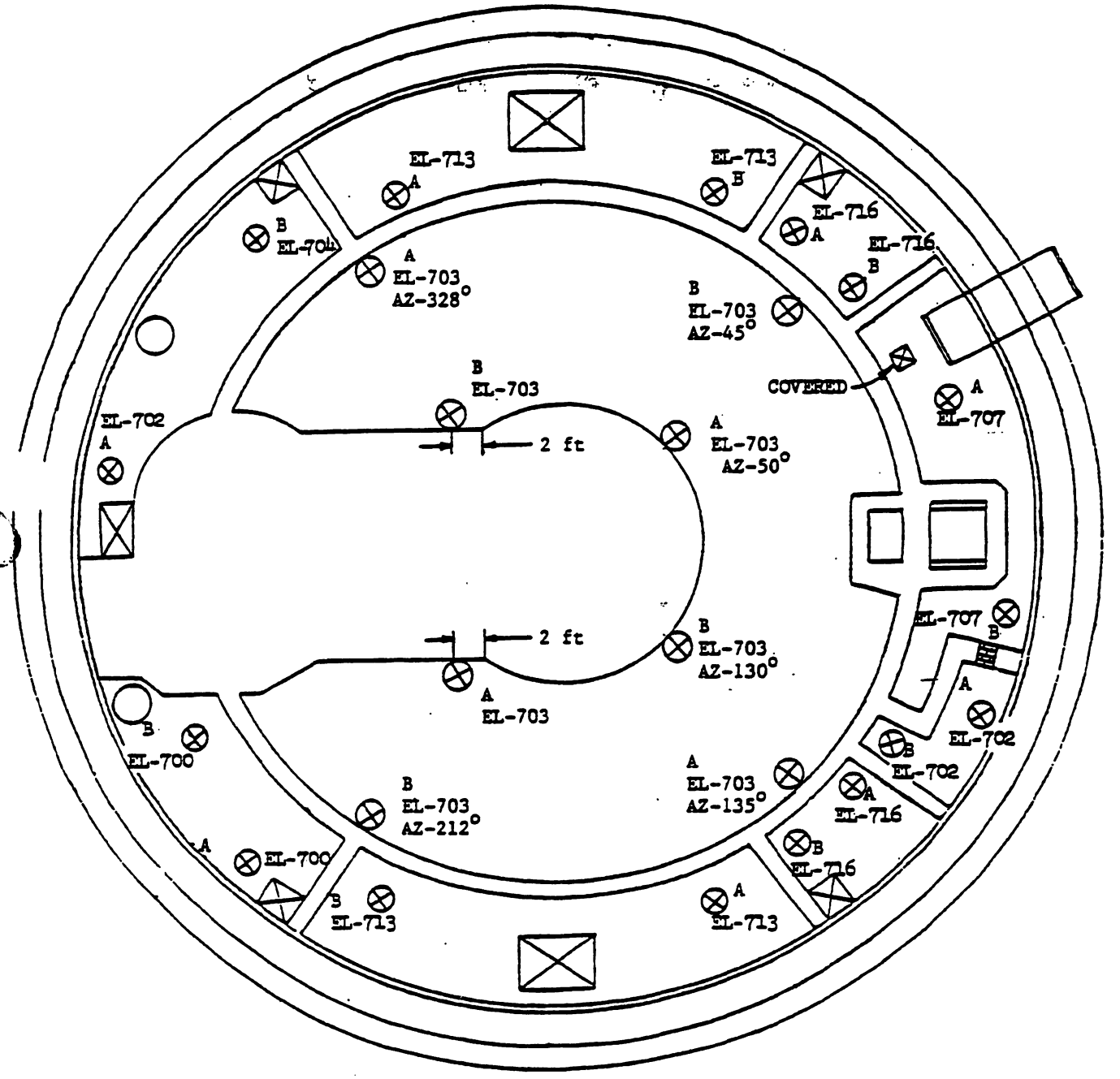

Figure 6.2.5A-1
Igniter Locations-
Lower Compartment and Dead-Ended
Compartments

Added by Amendment 1

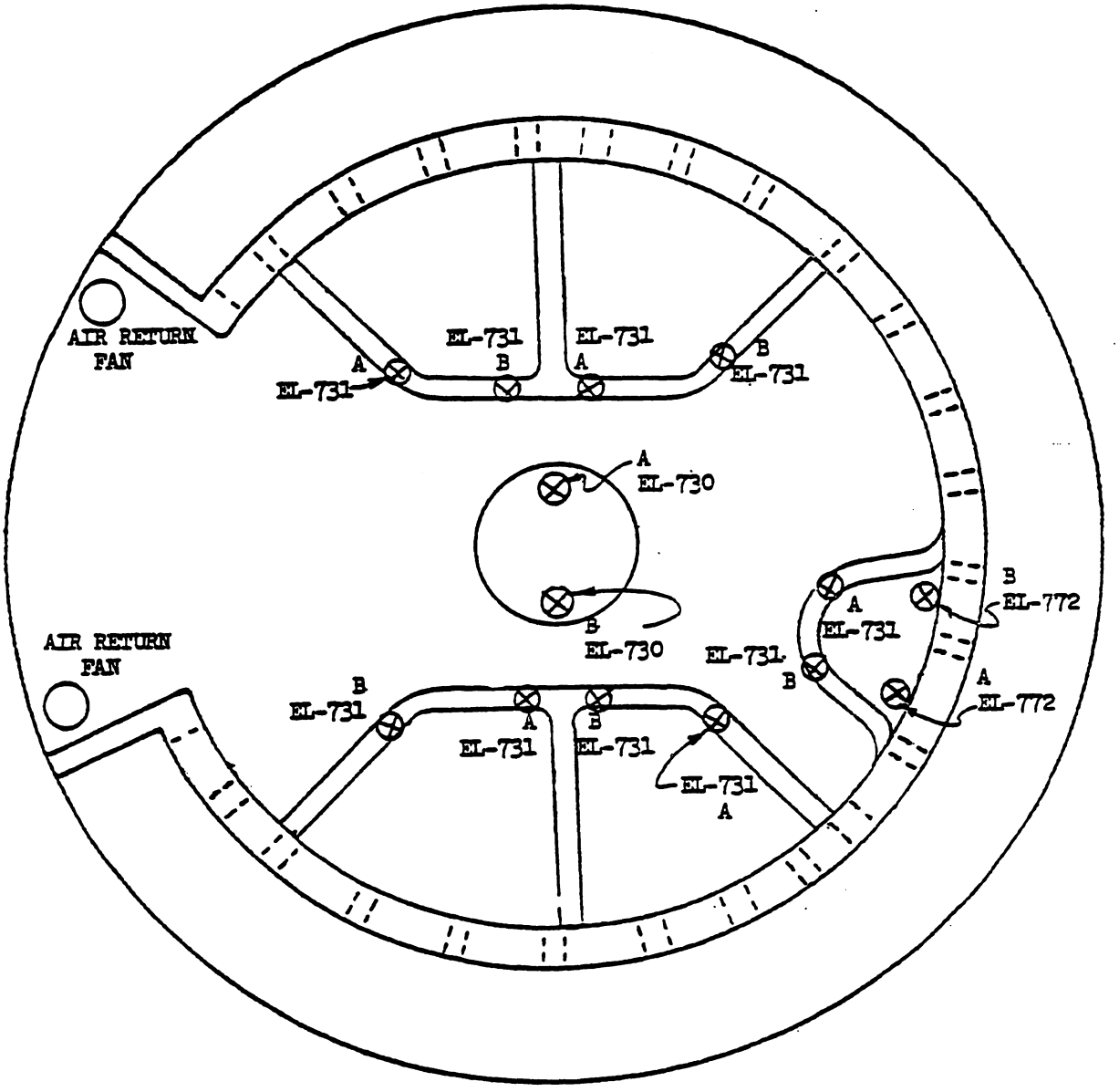

Figure 6.2.5A-2
Igniter Locations-Lower Compartment

Added by Amendment 1

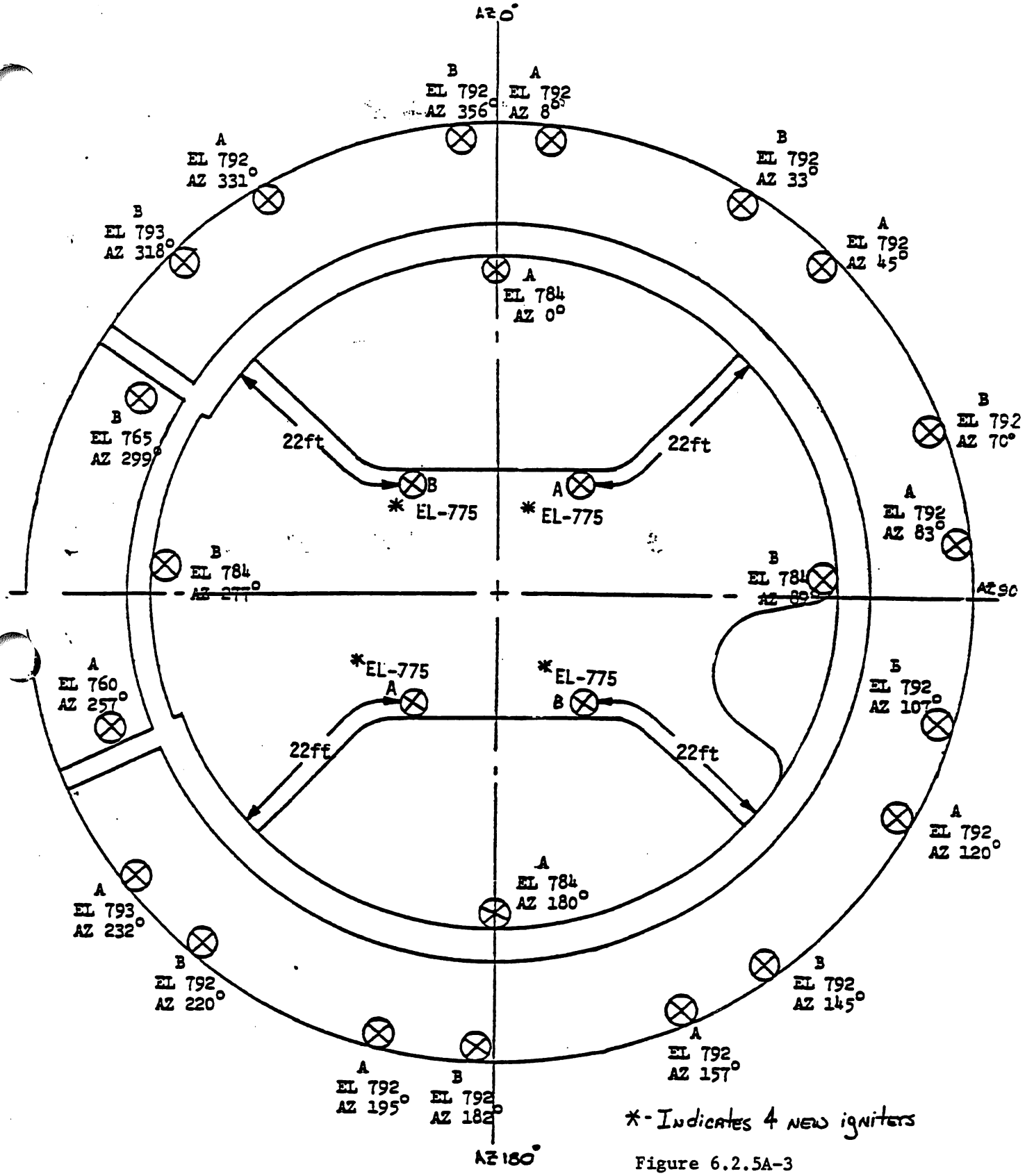

*- Indicates 4 new igniters

Figure 6.2.5A-3
Igniter Locations-Upper Plenum
And Upper Compartment

Added by Amendment 1

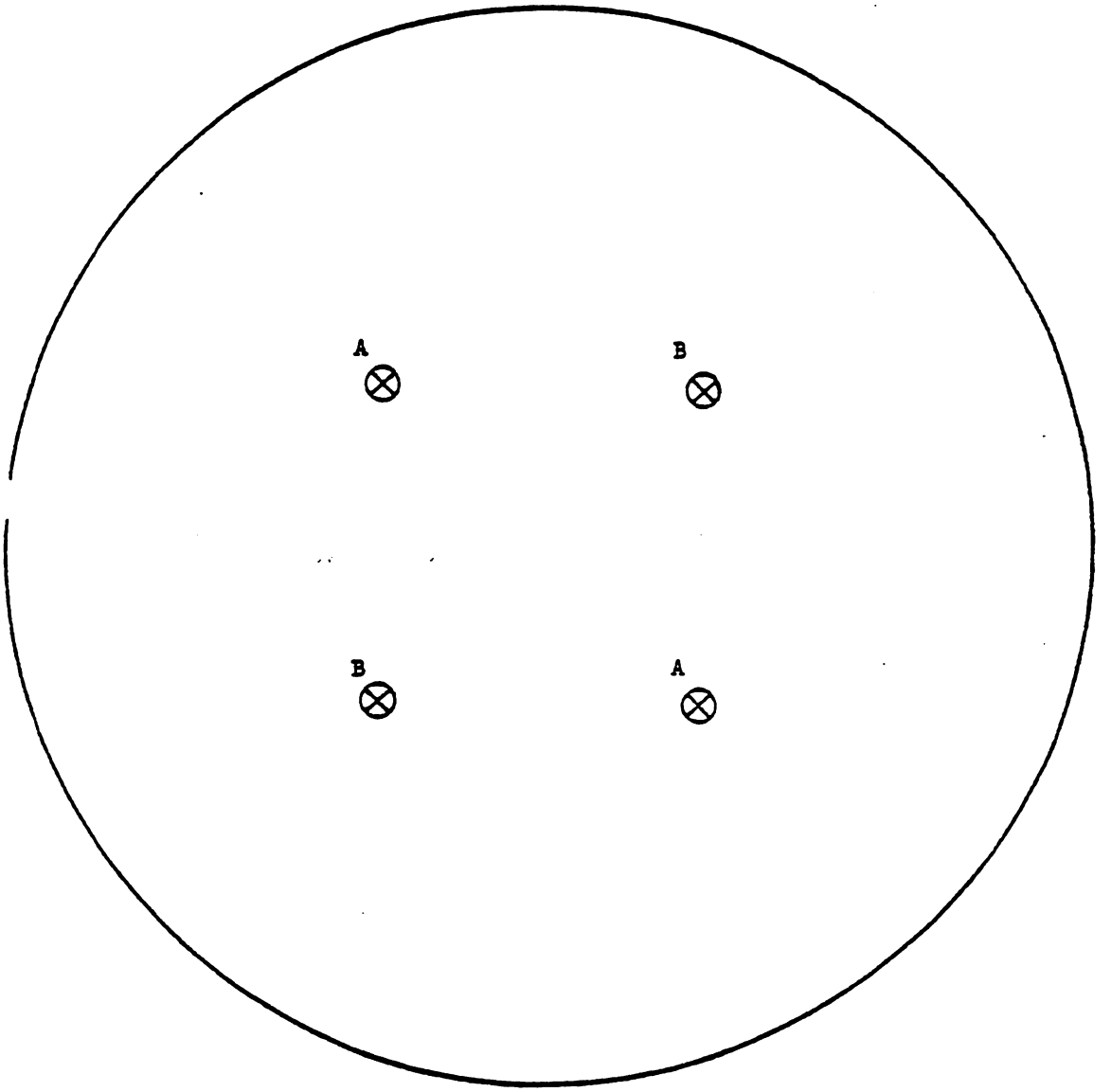

Igniters on Lighting Brackets at EL-846'-5 3/16"

Figure 6.2.5A-4
Igniter Locations-Dome

Added by Amendment 1

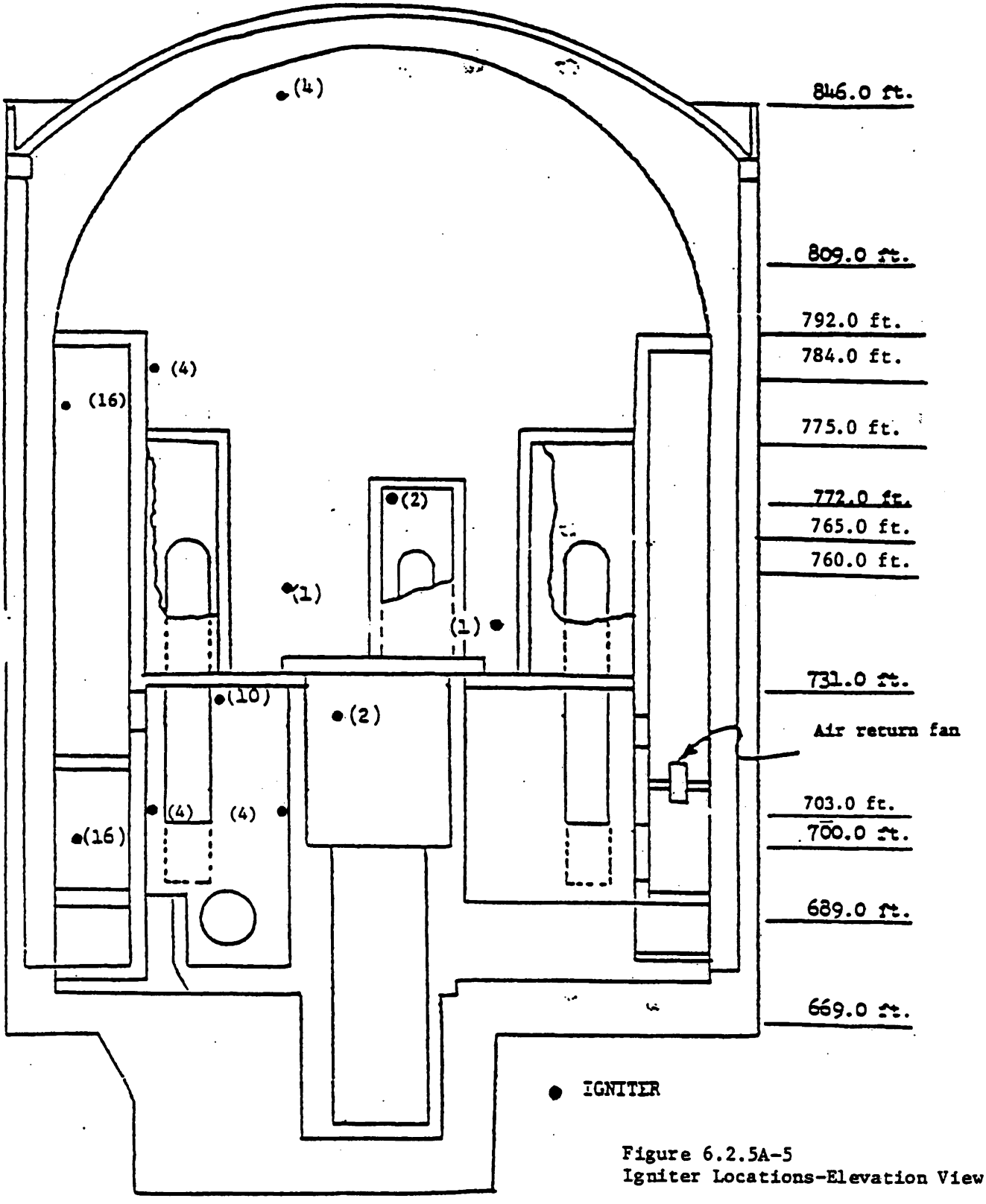

Figure 6.2.5A-5
Igniter Locations-Elevation View

Added by Amendment 1

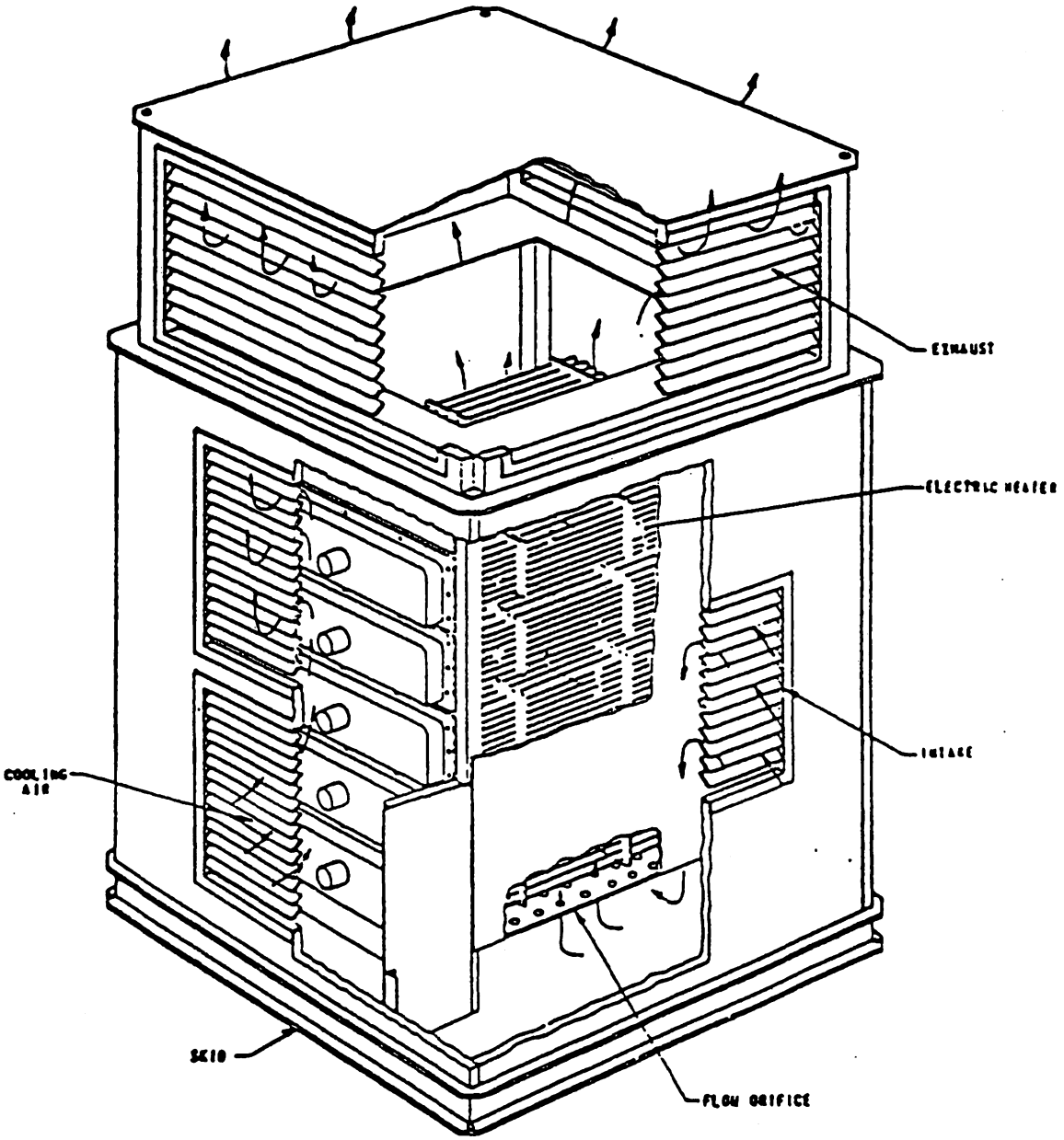

Revised by Amendment 20

Figure 6.2.5B-1 Electric Hydrogen Recombiner

Revised by Amendment 20

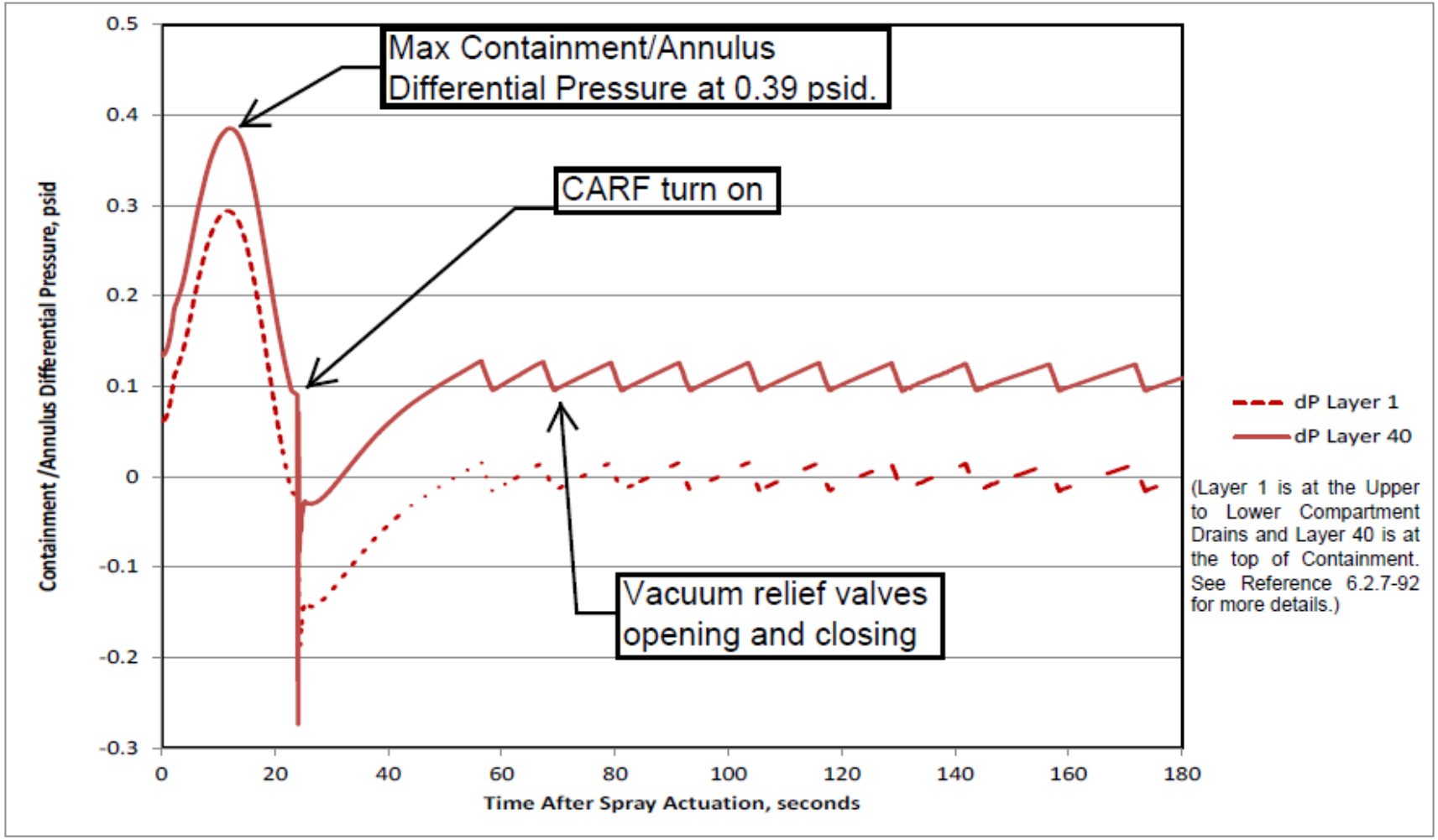

FIGURE 6.2.6-1 Containment Vessel Differential Pressure Due to Inadvertent Spray and Air Return Fan Systems Operations

(NOTE: Positive differential pressure is with respect to annulus pressure - positive psid indicates that containment pressure is lower than annulus pressure.)

Revised by Amendment 26

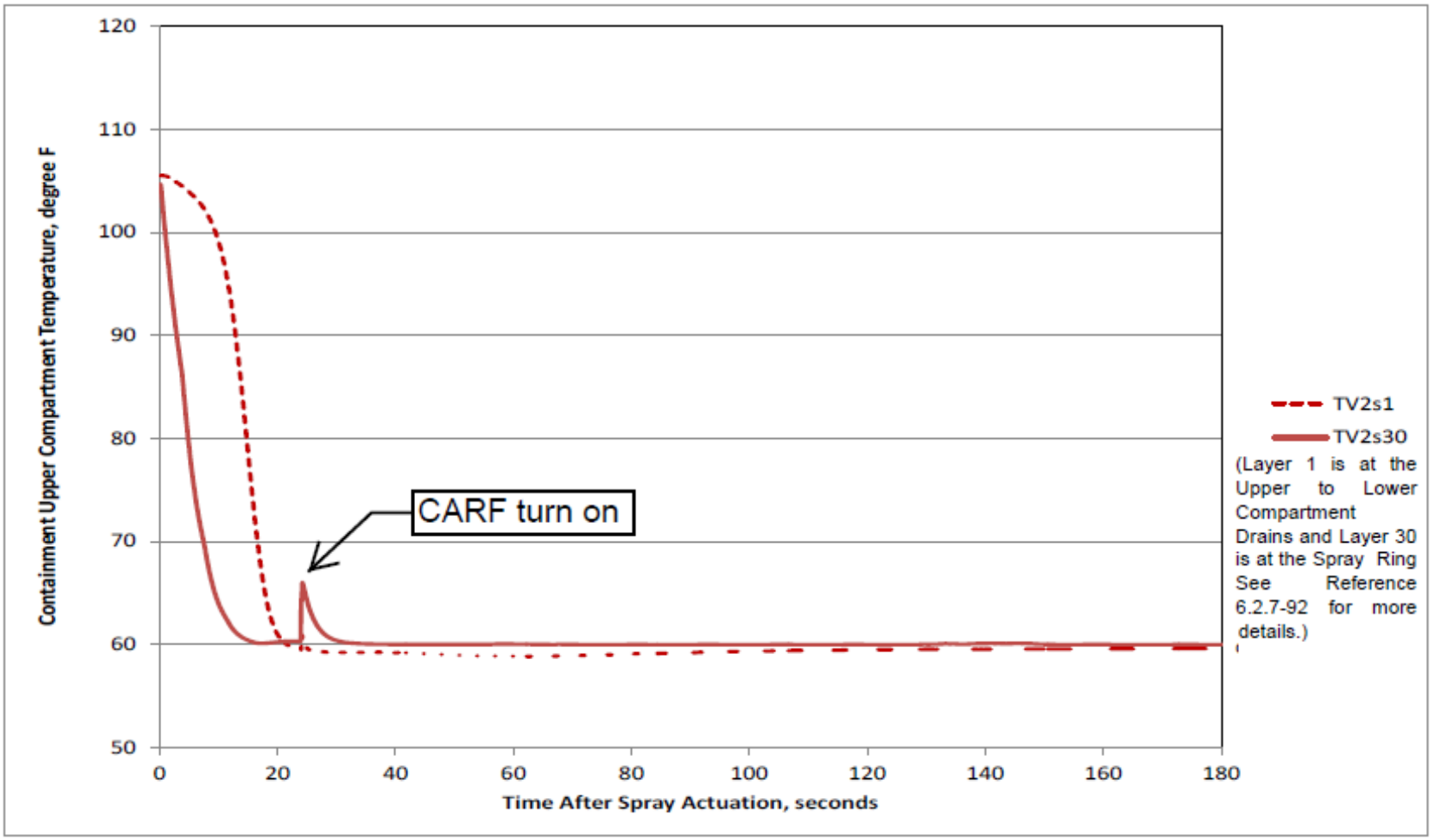

FIGURE 6.2.6-2 Containment Upper Compartment Temperature Due to Inadvertent Spray and Air Return Fan Systems Operations

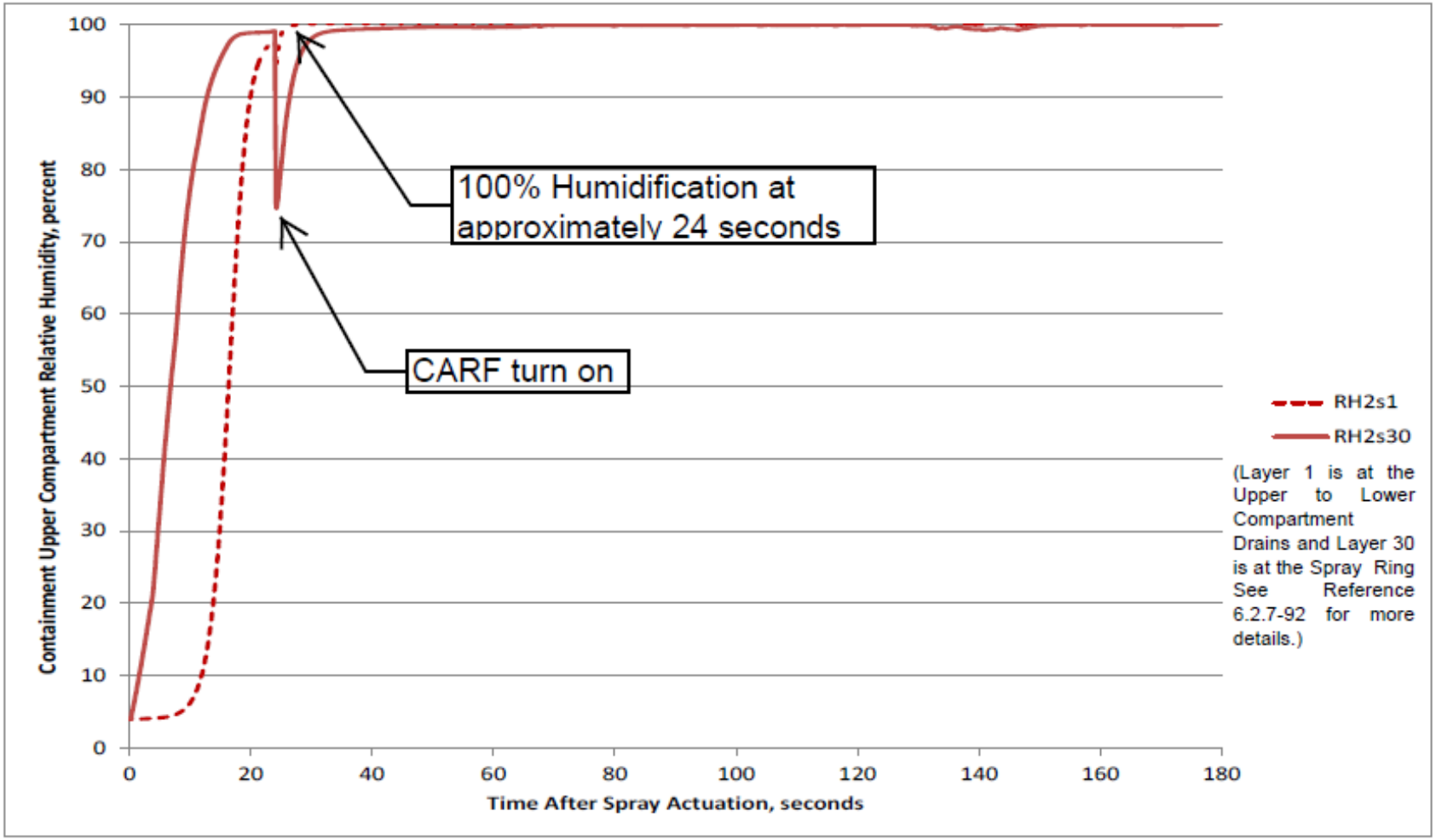

FIGURE 6.2.6-3 Containment Upper Compartment Relative Humidity Due to Inadvertent Spray and Air Return Fan Systems Operations

6.3 EMERGENCY CORE COOLING SYSTEM

The Emergency Core Cooling System (ECCS) is discussed in detail in this section. For additional information on the ECCS see the following sections:

1. Compliance with the Interim Acceptance Criteria is discussed in Subsection 15.4.1.

2. Components which are necessary following a postulated Loss-of-Coolant Accident (LOCA) over the entire range of break sizes are discussed in Sections 15.3 and 15.4.

3. External forces and their effect on the operation of the ECCS are treated in Sections 3.7 and 3.9.

4. Pre-operational system testing is discussed in Chapter 14.

5. The actuation of the ECCS following a LOCA is discussed in detail in Section 7.3.

6. Instrumentation available to the operator to monitor conditions after a LOCA is found in Section 7.5.

7. Testing intervals are discussed in the SQN Technical Specifications.

6.3.1 Design Bases

6.3.1.1 Range of Coolant Ruptures and Leaks

The Emergency Core Cooling System is designed to cool the reactor core as well as to provide additional shutdown capability following initiation of the following accident conditions:

1. A pipe break or spurious valve lifting in the Reactor Coolant System (RCS) which cause a discharge larger than that which can be made up by the normal makeup system, up to and including the instantaneous circumferential rupture of the largest pipe in the RCS.

2. Rupture of a control rod drive mechanism causing a rod cluster control assembly ejection accident.

3. A pipe break or spurious valve lifting in the secondary system, up to and including the instantaneous circumferential rupture of the largest pipe in the secondary system.

4. A steam generator tube rupture.

The analysis and acceptance criteria for the consequence of each of these accidents is described in Chapter 15 in the respective accident analyses sections.

6.3.1.2 Fission Product Decay Heat

The primary function of the Emergency Core Cooling System following a loss of coolant accident is to remove the stored and fission product decay heat from the reactor core such that fuel rod damage, to the extent that it would impair effective cooling of the core, is prevented.

6.3.1.3 Reactivity Required for Cold Shutdown

The Emergency Core Cooling System provides shutdown capability for the accidents listed above by means of chemical poison (boron) injection. The most critical accident for shutdown capability is the steam line break.

6.3.1.4 Capability to Meet Functional Requirements

In order to ensure that the Emergency Core Cooling System will perform its desired function during the accidents listed above, it is designed to tolerate a single active failure during the short term immediately following an accident, or to tolerate a single active or passive failure during the long term following an accident. This subject is detailed in Section 3.1.

The Emergency Core Cooling System is designed to meet its minimum required level of functional performance with onsite emergency diesel power system operation (assuming offsite power is not available) or with offsite electrical power system operation (assuming onsite power is not available) for any of the above abnormal occurrences assuming a single failure as defined above. During shutdown conditions, full ECCS capability may not be available. Operator action is utilized to initiate ECCS as required.

The Emergency Core Cooling System is designed to perform its function of ensuring core cooling shutdown capability following an accident under simultaneous safe shutdown earthquake loading. The seismic requirements are defined in Chapter 3.

6.3.2 System Design

6.3.2.1 Schematic Piping and Instrumentation Diagrams

A flow diagram of the Emergency Core Cooling System is shown in Figure 6.3.2-1. The SIP logic is provided in Figure 6.3.2-2. The CCP logic is on Figure 9.3 4-5.The RHR pump logic is on Figure 5.5.7-2. The safety injection signals and their logic is presented in Figure 7.2.1-1 (sheet 8).

6.3.2.2 Equipment and Component Design

Pertinent design and operating parameters for the components of the ECCS are given in Table 6.3.2-1. The codes and standards to which the individual components of the Emergency Core Cooling System are designed, are listed in Table 3.2.1-2.

The component design and operating conditions are specified as the most severe conditions to which each respective component is exposed during either normal plant operation, or during operation of the Emergency Core Cooling System. For each component, these conditions are considered in relation to the code to which it is designed. By designing the components in accordance with applicable codes, and with due consideration for the design and operating conditions, the fundamental assurance of structural integrity of the ECCS components is maintained. Components of the ECCS are designed to withstand the appropriate seismic loadings in accordance with their class as given in Table 3.2.1-2.

Cold Leg Injection Accumulators

These accumulators are pressure vessels filled with borated water and pressurized with nitrogen gas. During normal operation each accumulator is isolated from the RCS by two check valves in series. Should the RCS pressure fall below the accumulator pressure, the check valves open and borated water is forced into the RCS. One accumulator is attached to each of the cold legs of the RCS. Mechanical operation of the swing-disc check valves is the only action required to open the injection path from the accumulators to the core via the cold leg.

Connections are provided for remotely adjusting the level and boron concentration of the borated water in each accumulator during normal plant operation as required. Accumulator water level may be adjusted either by draining to the reactor coolant drain tank or by pumping borated water from the refueling water storage tank to the accumulator using the safety injection pump.

Accumulator pressure is provided by supplying a blanket of nitrogen gas in the accumulator tank, and can be adjusted as required during normal plant operation; however, the accumulators are normally isolated from the source of this nitrogen supply. Gas relief valves on the accumulators protect them from pressures in excess of design pressure.

The accumulators are located within the containment but outside of the secondary shield wall which protects them from missiles. Since the accumulators are located within the containment, a release of the nitrogen gas in the accumulators would cause an increase in normal containment pressure. Containment pressure increase following release of the gas from all accumulators has been calculated and is well below the containment pressure setpoint for ECCS actuation.

Release of accumulator gas would be detected by the accumulator pressure indicators and alarms. Thus the operator could take action promptly as required to maintain plant operation within the requirements of the SQN Technical Specification covering accumulator operability.

Injection Tank

The injection tank contains normal RCS water and is connected to the discharge of the centrifugal charging pumps. Upon actuation of the safety injection signal, the charging pumps provide flow through the tank into the RCS when the isolation valves open.

The injection tank incorporates a sparger type inlet which distributes the incoming boric acid in a 360 degree fan as it enters the tank. Any leakage into the tank will be detected by a pressure indicator.

Pumps

Residual Heat Removal Pumps

Residual heat removal pumps are provided to deliver water from the refueling water storage tank or the containment sump to the RCS should the RCS pressure fall below their shutoff head. Each residual heat removal pump is a single stage, vertical position, centrifugal pump. It has an integral motor-pump shaft, driven by an induction motor. The unit has an external mechanical seal cooling system. Component cooling water is the mechanical seal heat exchange medium. A minimum flow bypass line is provided for the pumps to recirculate through the residual heat exchangers and return the cooled fluid to the pump suction should these pumps be started with their normal flow paths blocked. Once sufficient flow is established to the RCS, the bypass line is automatically closed. This line prevents deadheading the pumps and permits pump testing during normal operation.

The residual heat removal pumps are also discussed in Subsection 5.5.7.

Centrifugal Charging Pumps

These pumps deliver water from the refueling water storage tank through the injection tank to the RCS at the prevailing RCS pressure. Each centrifugal charging pump is a multistage, diffuser design, barrel type casing with vertical suction and discharge nozzles. The pump is driven through a speed increaser connected to an induction motor. The unit has a self contained lubrication system, and mechanical seal cooling system. Component cooling water is the normal heat exchange medium for the mechanical seals and ERCW cools the lube oil heat exchanger. The centrifugal charging pump seals are designed with a secondary safety bushing that limits leakage from the pumps in the event of a loss of CCS seal failure. This allows the pumps to continue operation without CCS and after pump seal failure. Credit for centrifugal charging pump operation in this condition is assumed in the Sequoyah Probability Risk Assessment for reactor coolant pump seal integrity. This condition is applicable only to John Crane mechanical seals (Type 1B-RS).

A minimum flow bypass line is provided on each pump discharge to recirculate flow to the pump suction after cooling in the seal water heat exchanger, if required, to protect the pumps at the shutoff head. The minimum flow bypass line contains two isolation valves in series. These

valves have been de-energized and are open. The charging pumps may be tested during normal operation through the use of the minimum flow bypass line. The centrifugal charging pumps are also discussed in Subsection 9.3.4.

Safety Injection Pumps

The safety injection pumps deliver water from the refueling water storage tank after the RCS pressure is reduced below their shutoff head. Each safety injection pump is a multistage, centrifugal pump. The pump is driven directly by an induction motor. The unit has a self contained lubrication system, and mechanical seal cooling system. ERCW cools the lube oil heat exchanger and CCS cools the mechanical seals.

A minimum flow bypass line is provided on each pump discharge to recirculate flow to the refueling water storage tank in the event the pumps are started with the normal flow paths blocked. This line also permits pump testing during normal operation. Two motor operated valves in series are provided in this line. These valves are closed by operator action during the recirculation mode.

Residual Heat Exchangers

The residual heat exchangers are conventional shell and U-tube type units. During normal operation of the Residual Heat Removal System, reactor coolant flows through the tube side while component cooling water flows through the shell side. During emergency core cooling recirculation operation, water from the containment sump flows through the tube side. The tubes are seal welded to the tubesheet.

A further discussion of the residual heat exchangers is found in Subsection 5.5.7.

Valves

Design features employed to minimize valve leakage include:

1. Where possible, packless valves are used.
2. Globe valves are installed with recirculation fluid pressure under the seat to prevent leakage of recirculated (radioactive) water when the valves are closed.
3. Relief valves have totally enclosed bonnets. Relief valve discharges are piped to a collection system except for the accumulator relief valves (in the N_2 space of each accumulator) which discharge to the containment atmosphere.
4. Control and motor-operated valves, 2 inches and above, exposed to recirculate flow may have double packed stuffing boxes and stem leakoff connections piped where possible to the Waste Processing System. Some valves may have their leakoff line connections plugged after packing has been upgraded with graphite packing rings. These new configurations and materials provide improved sealing abilities to reduce the possibilities of stem leakage.

Motor Operated Gate Valves

The seating design of all motor operated gate valves is of the parallel disc design or the flexible wedge design. These designs aid in releasing the mechanical holding force during the first increment of travel so that the motor operator is assisted in opening. The discs are guided throughout the full disc travel to prevent chattering and to provide ease of gate movement. The seating surfaces are hard faced to prevent galling and to reduce wear.

Where a gasket is employed for the body to bonnet joint, it is a fully trapped, controlled compression, spiral wound gasket with provisions for seal welding. Valve stuffing boxes' original design is a lantern ring leakoff connection with a minimum of a full set of packing below

the lantern ring and a minimum of a one-half set of packing above the lantern ring. A full set of packing is defined as a depth of packing equal to 1-1/2 times the stem diameter. Some valves may have their leakoff line connections plugged after packing has been upgraded with graphite packing rings. These new configurations and materials provide improved sealing abilities to reduce the possibilities of stem leakage.

The motor operator incorporates a "hammer blow" feature that allows the motor to attain its operational speed prior to being subjected to operational loads.

Manual Globes, Gates, and Check Valves

Gate valves are either wedge design or parallel disc and are straight through. The wedge is either split or solid. All gate valves have backseat and outside screw and yoke.

Globe valves, "T" and "Y" style are full ported with outside screw and yoke construction.

Check valves are spring loaded lift piston types for sizes 2 inches and smaller, and swing type for size 3 inches and larger. Stainless steel check valves have no penetration welds other than the inlet, outlet and bonnet. The check hinge is serviced through the bonnet.

The stem packing and gasket of the stainless steel manual globe and gate valves are similar to those described above for motor operated valves. Carbon steel manual valves are employed to pass non-radioactive fluids only and therefore do not contain the double packing and seal weld provision.

Diaphragm Valves

The diaphragm valves use the diaphragm member for shutoff with even weir bodies. These valves are used throughout the ECCS where pressures and temperatures permit.

Accumulator Check Valves

The low pressure accumulator check valves are designed with a low pressure drop configuration with all operating parts contained within the body.

Design considerations and analyses which assure that leakage across all the check valves located in each accumulator injection line will not impair accumulator availability are as follows:

1. During normal operation the differential pressure is approximately 1635 psid for the check valves in the cold leg lines. Since the valves remain in this position except when tested or when called upon to function, they are not subject to the abuses of flow operation or impact loads caused by sudden flow reversal and seating. They do not experience significant wear of the moving parts and hence are expected to function with minimal leakage.

2. When the RCS is being pressurized during the normal plant heatup operation, the check valves are tested for leakage in accordance with Technical Specifications. This test confirms the seating of the disc.

3. The experience derived from the check valves employed in the emergency injection systems indicate that the system is reliable and workable. This is substantiated by the satisfactory experience from operation of the Ginna and subsequent plants where the usage of check valves is identical to this application.

Relief Valves

The accumulator relief valves are sized to pass nitrogen gas at a rate in excess of the accumulator gas fill line delivery rate. The relief valves will also pass water in excess of the

expected accumulator in leakage rate, but this is not considered to be necessary, because the time required to fill the gas space gives the operator ample opportunity to correct the situation. Other relief valves are installed in various sections of the ECCS to protect lines which have a lower design pressure than the RCS. Some relief valves discharge to the pressurizer relief tank. The valve stem and spring adjustment assembly are isolated from the system fluids by a bellows seal between the valve disc and spindle.

Butterfly Valves

Each main residual heat removal line has an air-operated butterfly valve which is normally open and is designed to fail in the open position. These valves are left in the full open position during normal operation to maximize flow from this system to the RCS during the injection mode of the ECCS operation.

Throttle Valves

The correct position of each mechanical stop shall be verified within 4 hours following action of each valve stroking operation or maintenance on the valve when the ECCS subsystems are required to be operable for the following ECCS throttle valves: Charging Pump Injection Throttle Valves (63-582,63-583, 63-584, and 63-585) Safety Injection Cold Leg Throttle Valves (63-550, 63-552, 63-554, and 63-556) and Safety Injection Hot Leg Throttle Valves (63-542, 63-544, 63-546, and 63-548)

Piping

All piping joints are welded except for pump connections, butterfly valves, relief valves, orifice plate flange connections, and flanged connections for maintenance.

Weld connections for pipes sized 2-1/2 inches and larger are butt welded. Reducing tees are used where the branch size exceeds one-half of the header size. Branch connections of sizes that are equal to or less than one-half of the header size conform to the ANSI B31.1.0-1967 Edition Code. Branch connections 1/2 through 2 inches are attached to the header by means of full penetration welds, using pre-engineered integrally reinforced branch connections.

Minimum piping and fitting wall thickness as determined by ANSI B31.1.0-1967 Edition formula are increased to account for the manufacturer's permissible tolerance of minus 12-1/2 percent on the nominal wall and an appropriate allowance for wall thinning on the external radius during any pipe bending operations in the shop fabrication of the subassemblies.

To assure that air pockets, which may cause disruptive water hammer and/or pump binding, are eliminated from the ECCS, vent valves have been located at high points throughout the system. The use of these valves when filling will ensure a solid system from the suction valves at the containment sump to the inlet valve to the containment spray header. The piping from the containment sump to the suction valve is normally maintained dry and have been designed to be self venting. The RHR spray header is maintained with a 30 day water seal for 10CFR50 Appendix J. The spray header is also self venting.

Once the system is filled, a positive static pressure provided by the RWST precludes the leaking of air into the system.

Leak detection is discussed in Sections 5.2.7 and 6.3.2.11.

System Operation

The operation of the ECCS following a Loss of Coolant Accident, can be divided into two distinct modes:

1. The injection mode in which any reactivity increase following the postulated accidents is terminated, initial cooling of the core is accomplished, and coolant lost from the primary system in the case of a LOCA is replenished, and

2. The recirculation mode in which long term core cooling is provided during the accident recovery period.

A discussion of these modes follows.

Break Spectrum Coverage

The principal mechanical components of the ECCS which provide core cooling immediately following a loss of coolant accident are the accumulators, the safety injection pumps, the centrifugal charging pumps, the residual heat removal pumps, refueling water storage tank, injection tank, and the associated valves, and piping.

For large pipe ruptures, the RCS would be depressurized and voided of coolant rapidly, and a high flow rate of emergency coolant is required to quickly cover the exposed fuel rods and limit possible core damage. This high flow is provided by the passive cold leg accumulators, the charging pumps, safety injection pumps, and the residual heat removal pumps discharging into the cold legs of the RCS. The residual heat removal and safety injection pumps deliver into the accumulator injection lines, between the two check valves, during the injection mode. The charging pumps deliver through the injection tank directly into the cold legs during the injection mode.

Emergency cooling is provided for small ruptures primarily by the high head injection pumps. Small ruptures are those, with an equivalent diameter of 6 inches or less, which do not immediately depressurize the RCS below the accumulator discharge pressure. The centrifugal charging pumps deliver borated water at the prevailing RCS pressure to the cold legs of the RCS. During the injection mode, the charging pumps take suction from the refueling water storage tank.

The safety injection pumps also take suction from the refueling water storage tank and deliver borated water to the four cold legs of the RCS. The safety injection pumps begin to deliver water to the Reactor Coolant System after the pressure has fallen below the pump shutoff head.

The residual heat removal pumps take suction from the refueling water storage tank and deliver borated water to the four RCS cold legs. These pumps begin to deliver water to the RCS only after the pressure has fallen below the pump shutoff head. The RHR system is designed such that there are four injection legs for ECCS operation. As such, a minimum of one RHR pump must provide flow to all four RCS cold legs during the injection mode (when RCS pressure has decreased).

Core protection is afforded with the minimum engineered safety feature equipment. The minimum engineered safety feature equipment is defined by consideration of the single failure criteria as discussed in Section 3.1. The minimum design case will ensure the entire break spectrum is accounted for and core cooling is met.

For large RCS ruptures, the accumulators and the active high head and low head pumping components serve to complete the core refill. If the break is small (6 inch equivalent diameter or less), the accumulators with one charging pump and one safety injection pump ensure adequate cooling during the injection mode. Long term recirculation requires one residual heat removal pump and components of the auxiliary heat removal systems which are required to transfer heat from the ECCS (e.g., Component Cooling System and Essential Raw Cooling Water System).

Certain deviations (i.e., reduced component availability) to the normal operating status as given in Table 6.3.2-3 of the ECCS are permissible without impairing the ability of the ECCS System to provide adequate core cooling capability. Accordingly, Technical Specifications have been established to cover these limiting conditions for operation.

The Technical Specifications permit one train of an ECCS subsystem to be inoperable during power operation for a specified time period, provided that the opposite train is operable or both trains inoperable provided 100% of the ECCS flow equivalent to a single operable ECCS train is available. Out of service action times and specific actions are described in Technical Specifications.

Accumulator injection occurs immediately when the RCS is depressurized below accumulator operating pressure. The cold leg injection accumulators can be isolated from the RCS by closure of their motor operated isolation valves, or the accumulators can be vented to containment to prevent the injection of nitrogen into the RCS during subsequent RCS depressurization.

Injection Mode After Loss of Primary Coolant

The injection mode of emergency core cooling is initiated by the safety injection signal ("S" signal). This signal is actuated by any of the following:

1. Low pressurizer pressure
2. High containment pressure
3. Low steam line pressure
4. Manual

Operation of the ECCS during the injection mode is completely automatic. Refer to Figure 7.2.1-1 (Sheet 8) for complete safety injection logic and control diagrams. The safety injection signal, in addition to activating various ESF equipment, automatically initiates the following actions:

1. Starts the diesel generators, provides backup reactor trip signal, control room isolation, Containment Ventilation Isolation containment phase A isolation and main feedwater isolation.

2. Starts the centrifugal charging pumps, the safety injection pumps, and the residual heat removal pumps.

3. Aligns the charging pumps for injection by:
   a. Closing the valves in the charging pump discharge line to the normal charging line.
   b. Opening the valves in the charging pumps suction line from the refueling water storage tank.
   c. Closing the valves in the charging pump normal suction line from the volume control tank.
   d. Opening the injection tank inlet and discharge line isolation valves.

4. Provides a backup signal to the SIS accumulator valves and RHR HTX discharge butterfly valves to auto-open these normally open valves should they not be fully open

Remotely operated valves for the injection mode which are under manual control (i.e., valves which normally are in their ready position and do not require a safety injection signal) have their position indicated on a common portion of the control board. If a component is out of its proper position, its monitor light will indicate this on the control panel. At any time during operation when one of these valves is not in the ready position for injection, this condition is shown visually on the board, and an audible alarm is sounded in the main control room.

Shutdown LOCA (SDLOCA)

Full ECCS capability is not available during shutdown conditions. A SDLOCA relies on the effectiveness of Operator action to manually establish ECCS flow (see 6.3.2.17). For SDLOCA events in Mode 4 during the injection phase, one train of ECCS provides sufficient flow for core cooling to meet the analysis requirements for a credible Mode 4 Loss of Coolant Accident (LOCA). For the SDLOCA case, the required flow is met by the centrifugal charging subsystem supplying each of the four cold legs. While not necessary, RHR injection into at least two of the four cold legs is acceptable with respect to fulfilling the accident function of the RHR subsystem for a Mode 4 LOCA.

Recirculation Mode

The injection mode continues until the RHR pumps have been realigned to the recirculation mode. During the injection mode all pumps take suction from the refueling water storage tank (RWST) until a low level signal from the RWST in conjunction with the "S" signal and a high sump level signal aligns the residual heat removal pumps to take suction from the containment sump. The RHR pump suction valves (FCV-74-3 and FCV-74-21) are automatically closed coincident with

the opening of the sump isolation valves (FCV-63-72 and FCV-63-73). The automatic positioning of these valves is initiated only in the event that actuation signals are generated by the safeguards protection logic ("S" signal), two of four RWST low level protection logic signals, and two out of four sump high level signals. The RHR pumps continue to receive adequate suction flow during this automatic change over; thus there is no possibility of pump damage due to loss of suction. Alarms on RWST low level and level indications from both the sump and RWST are used by the operator to appraise the accident situation and complete the remainder of switchover sequence. Table 6.3.2-4 describes the sequence of changeover operation from injection to recirculation for the RHR system.

The switchover initiation point and minimum assured final volume in the RWST before completion of switchover are selected on the basis of maximizing the allowable operator action time for accompanying manual operations and total water injected to the RCS while avoiding the potential problems due to low levels in either the active sump inside containment (area A, Figure 6.3.2-3) or in the RWST. Crane wall penetrations inside containment are sealed as necessary between elevations 679.78 and 693 to retain more water in the active sump, thereby maximizing the active sump water level at the onset of the recirculation switchover. Area C, Figure 6.3.2-3 cannot flood until area A is filled to elevation 693 feet.

An analysis of the double ended cold leg break documents that the ECCS sump water inventory present during the switch over from injection to recirculation mode, at the time suction is first taken from the sump, will conservatively meet all ECCS flow requirements, including ensuring adequate pump NPSH and precluding unacceptable vortexing. This inventory will be present even if it is postulated that the volume below the reactor vessel (area B, Figure 6.3.2-3 floods before any water enters the active sump (for example, if the break is at the reactor vessel nozzle). Assumptions used in this analysis include: technical specification minimum volumes in the RWST and the SIS accumulators; technical specification minimum ice mass; switchover sequence as described in Table 6.3.2-4; ice melt as shown in Figure 6.2.1-19; maximum expected holdup of containment spray water in the upper compartment (area D, Figure 6.3.2-3); and subcooled sump fluid temperature of 160°F. Reactor coolant inventory was not considered on this analysis except for breaks which may flood the volume below the reactor vessel.

Curbs are added to the peripheries of the operating deck (elevation 733.63) to ensure containment spray runoff on elevation 733.63 is directed to the refueling canal. To avoid containment spray water loss outside the crane wall to accumulator rooms #3 and #4 via the containment air return fans, curbs and drain lines are provided to collect water in these rooms and transfer it to the sump inside the crane wall (See Figure 9.3.3-1).

The sequence (as delineated in Table 6.3.2-4) is followed regardless of which power supply is available (offsite or emergency onsite).

The time required to complete the sequence is essentially the time required for operator to perform the accompanying manual operations. Controls for ECCS components are grouped together on the main control board. The component position lights verify when the function of a given switch has been completed.

After the injection phase of core cooling, water collected in the containment sump is cooled and returned to the RCS by the low head/high head recirculation flow path. The RCS can be supplied simultaneously from the residual heat removal pumps, and from a portion of this discharge taken after the residual heat exchangers which is then directed to the charging pumps and safety injection pumps. The charging and safety injection pumps return the water to the RCS. The latter mode of operation assures flow in the event of a small rupture where the depressurization proceeds more slowly such that the RCS pressure is still in excess of the shutoff head of the residual heat removal pumps at the onset of recirculation.

Hot leg recirculation will be initiated to assure against an excessive buildup of boric acid concentration in the core approximately 5.5 hours after event initiation.

The containment sump isolation valve is interlocked with its respective low head, RHR pump suction/refueling water storage tank isolation valve. This interlock prevents remote manual opening the sump isolation valve when the refueling water storage tank isolation valves are open and thus prevents dumping the refueling water storage tank contents into the containment sump. However, when an accident signal is present this interlock is bypassed to allow the automatic switchover as described in Table 6.3.2-4.

The refueling water storage tank is protected from back flow of reactor coolant from the RCS. All connections to the refueling water storage tank are provided with check valves to prevent back flow. When the RCS is hot and pressurized there is no direct connection between the refueling water storage tank and the RCS. When the RCS is being cooled and the Residual Heat Removal System is cut in, the Residual Heat Removal System is isolated from the refueling water storage tank by a motor operated valve (FCV-63-1) in addition to a check valve.

Redundancy in the external recirculation loop is provided for by the inclusion of duplicate charging, safety injection, and residual heat removal pumps and residual heat exchangers. In addition, the safety injection pump discharges into all four hot legs as shown in Figure 6.3.2-1.

The low head pumps take suction through redundant lines from the containment sump and discharge through separate paths to the RCS. This design provides sufficient flow area and adequate NPSH for the residual heat removal pumps to operate in the recirculation mode.

The containment sump is protected at entry by the advanced design strainers. Each strainer contains perforations with a diameter of 0.095 inch. The dynamic effects of double-ended postulated pipe ruptures in the reactor coolant loops have been eliminated from the design basis of the Sequoyah Nuclear Plant by the application of leak-before-break technology. Therefore, there are no RCS blowdown forces which impact the strainers. Water flowing into the sump passes through the strainers and through a 1/4 inch mesh screen inside the sump, and enters the twin recirculation pipes connecting the sump to the RHR and containment spray pumps. Containment sump with vortex modifications suppression is shown in Figure 6.3.2-4. For further discussion of sump design and performance refer to subsection 6.2.2.2.

Each recirculation line from the sump is routed outside the containment to a sump isolation valve. This valve is surrounded with a steel enclosure and the section of piping joining it to the sump is run within a guard pipe welded to the enclosure. Any leakage from the sump piping or valve body will be contained and cannot leak into the atmosphere or cause a loss of recirculation fluid. Any excessive leakage or passive failure downstream of the sump valves can be controlled and isolated by closure of the sump valve in the affected train.

External Recirculation Loop

The ECCS recirculation loop piping and components external to containment is surrounded by shielding. This shielding is designed to permit access for maintenance to a component such as a pump while the redundant component is recirculating sump fluid.

Pressure relieving devices, from portions of the ECCS located outside containment which might contain radioactivity, discharge to the pressurizer relief tank.

An analysis has been performed to evaluate the radiological effects of recirculation loop leakage. The leakage loop is assumed to include a high head injection pump, a residual heat removal pump, a residual heat exchanger and the associated piping even though the loop can be isolated with a redundant flow path providing adequate core cooling. In the analysis, a maximum leakage was assumed as given in Table 6.3.2-5. The analyses given in Chapter 15, demonstrate that the offsite does resulting from such leakage and other sources described in the analysis is less than the guidelines of 10 CFR 100.

During recirculation, significant margin exists between the design and operating conditions (in terms of pressure and temperature) of the ECCS components.

Since redundant flow paths are provided during recirculation, a leaking component in one of the flow paths may be isolated. This action curtails any further leakage and renders the component available for corrective maintenance.

6.3.2.3 Applicable Codes and Classifications

The codes and standards to which the individual components of the ECCS are designed are listed in Table 3.2.1-2.

6.3.2.4 Materials Specifications and Compatibility

Materials employed for components of the ECCS are given in Table 6.3.2-6. Materials are selected to meet the applicable material requirements of the codes in Table 3.2.1-2 and the following additional requirements:

1. All parts of components in contact with sump solution during recirculation are fabricated of austenitic stainless steel or equivalent corrosion resistant material.

2. All parts of all components in contact with borated water are fabricated of, or clad with, austenitic stainless steel or equivalent corrosion resistant material, with the exception of pump seals and valve packing.

3. Valve seating surfaces are hard-faced with Stellite No. 6 or equivalent to prevent galling and reduce wear.

4. Valve stem materials are selected for their corrosion resistance, high tensile properties, and resistance to surface scoring by the packing.

The elevated temperature of the sump solution is well within the design temperature of all the ECCS components. In addition, consideration has been given to the potential for corrosion of various types of metals exposed to the fluid conditions prevalent immediately after the accident or during the long term recirculation operations.

Environmental testing of the ECCS equipment inside the containment, which is required to operate following a LOCA, is discussed in Reference (1). The chemistry used in the test program was obtained by using a spray solution of 1.5 w/o boric acid solution and adjusting the pH to a value of approximately 9.25 with sodium hydroxide. This solution is similar to that of a post accident environment resulting from the release of sodium-tetraborate following the ice-melt. The ice-melt is discussed in greater detail in Section 6.2. The results of the test program indicate that the safety features will operate satisfactorily during and following exposure to the combined containment post-accident environments of temperature, pressure, chemistry, and radiation.

6.3.2.5 Design Pressures and Temperatures

The component design pressure and temperatures are given in Table 6.3.2-1. These pressure and temperature conditions are specified as the most severe conditions to which each respective component is exposed during either normal plant operation or during operation of the ECCS.

For each component, these conditions are considered in relation to the code to which it is designed. By designing the components in accordance with applicable codes (see Section 3.2) and with due consideration for the design and operating conditions, the fundamental assurance of structural integrity of the Emergency Core Cooling System components is maintained.

6.3.2.6 Coolant Quantity

The minimum storage volume for the accumulators and the refueling water storage tank is given in Table 6.3.2-3. The minimum storage volume in the RWST and the accumulators is sufficient to ensure that, after a RCS break, sufficient water is injected and is available within the containment to permit recirculation cooling flow to the core, and to meet the net positive suction head requirements of the residual heat removal pumps. A further discussion of coolant requirements is contained in Sections 15.3 and 15.4.

6.3.2.7 Pump Characteristics

Performance curves for the residual heat removal pumps are given in Figure 6.3.2-5. Performance curves for the safety injection pumps are given in Figure 6.3.2-6. Performance curves for the centrifugal charging pumps are given in Figure 6.3.2-7. Power requirements for the pumps are given in Section 8.3.

6.3.2.8 Heat Exchanger Characteristics

Residual Heat Exchanger Characteristics are found in Subsection 5.5.7 (see Table 5.5.7-2).

6.3.2.9 ECCS Flow Diagrams

The SIS flow diagram is given as Figure 6.3.2-1.

6.3.2.10 Relief Valves

The ECCS relief valves, their capacities and settings are given in Table 6.3.2-2.

6.3.2.11 System Reliability

Definition of Terms

Definitions of terms used in this section are located in Subsection 3.1.1.

Active Failure Criteria

The ECCS is designed to accept any single failure at any time following the incident without loss of its protective function. The system design will tolerate the failure of any single active component in the ECCS itself or in the necessary associated service systems at any time during the period of required system operations following the incident.

A single active failure analysis is presented in Table 6.3.2-7, and demonstrates that the ECCS can sustain the failure of any single active component in either the short or long term or any passive component failure in the long term (see Table 6.3.2-8) and still meet the level of performance for core cooling.

Since the operation of the active components of the ECCS following a steam line rupture is identical to that following a loss of coolant accident, the same analysis is applicable and the ECCS can sustain the failure of any single active component and still meet the level of performance for the addition of shutdown reactivity. Passive failure is not considered for the short term.

Passive Failure Criteria

The following philosophy provides for necessary redundancy in component and system arrangement to meet the intent of the NRC General Design Criteria on single failure as it specifically applies to failure of passive components, in the ECCS. Thus, for the long term, the system design is based on accepting either a passive or an active failure.

Redundancy of Flow Paths and Components for Long-Term Emergency Core Cooling

In design of the Emergency Core Cooling System, Westinghouse utilized the following criteria.

1. During the long-term cooling period following a LOCA, the emergency core cooling flow paths are separable into two sub-systems, either of which can provide minimum core cooling functions and return spilled water from the floor of the containment back to the RCS.

2. Either of the two sub-systems can be isolated and removed from service in the event of a leak outside the containment.

3. Adequate redundancy of check valves is provided to tolerate failure of a check valve during the long-term as a passive component.

4. Should one of these two sub-systems be isolated in this long-term period, the other sub-system remains operable.

5. Provisions are also made in the design to detect leakage from components outside the containment, collect this leakage and to provide for maintenance of the affected equipment.

Thus, for the long-term emergency core cooling function, adequate core cooling capacity exists with one flow path removed from service whether isolated due to a leak, because of blocking of one flow path, or because failure in the containment results in a spill of the delivery of one injection flow path. It should be noted that closure of the A-Train Safety Injection Pump Suction Isolation Valve (FCV-63-47) during power operation will prevent B-Train Residual Heat Removal from supplying either Centrifugal Charging Pump in the cold leg recirculation mode. This results in the inoperability of both trains of ECCS because at least one complete independent train cannot be established in all ECCS modes; however, entry into LCO 3.0.3 is not required provided that at least 100 percent of the ECCS flow equivalent to a single operable ECCS train is available. The design intent of the ECCS piping layout is to maximize the number of options available to the control room operator for response to a passive failure. This is consistent with the defense in depth approach for ECCS design.

Subsequent Leakage from Components in Safeguards Systems

With respect to piping and mechanical equipment outside the containment, considering the provisions for visual inspection and leak detection, leaks will be detected before they propagate to major proportions. A Westinghouse review of the equipment in the system indicates that the largest sudden leak potential would result from the sudden failure of an RHR or CS pump shaft seal. Evaluation of seal leakage assuming only the presence of a seal retention ring around the pump shaft showed flows less than 50 gpm would result. Piping leaks, valve packing leaks, or flange gasket leaks have been of a nature to build up slowly with time and are considered less severe than the pump seal failure.

1. The piping is classified in accordance with ANS Safety Class 2 and receives the ASME Class 2 quality assurance program associated with this safety class.

2. The piping, equipment and supports are designed to insure no loss of function for the Safe Shutdown Earthquake.

3. The system piping is located within a controlled area on the plant site.

4. The piping system receives periodic tests and is accessible for periodic visual inspection.

5. The piping is austenitic stainless steel which, due to its ductility, can withstand severe distortion without failure.

Based on this review, design of the Auxiliary Building and related equipment is based upon handling of ECCS leaks up to a maximum of 50 gpm. To assure adequate core cooling, design features are provided to prevent this limiting passive failure from causing any loss of function in the other train of the ECCS equipment due to flooding of redundant components or loss of NPSH to the ECCS pumps. Independent means are available to provide information to the operator for use in identifying ECCS leakage into certain locations in the Auxiliary Building. These means include the Auxiliary Building flood detection system, the instrumentation and alarms associated with the drainage and waste processing systems which normally handle drainage into these areas.

A flood detection system utilizing conductivity type water level detector devices is used to monitor and actuate alarms for ECCS and other leakage at specific locations in the Auxiliary Building. Individual detectors are located in each ECCS pump compartment, in the ECCS heat exchanger rooms, in the pipe gallery for each unit, and in the pipe chase. A common alarm in the main control room will alert the operator when any of these flood detectors are tripped. A flood detector indicator panel, located immediately outside the control room, then identifies the exact location of the tripped detector. The detector panel is provided with a test switch which can be used to verify the availability of power to each individual detector. These flood detectors are to be tested to verify initial operability and will be periodically tested as a part of the plant instrument surveillance and maintenance program.

Since each ECCS pump and heat exchanger room is monitored by a level detection device, the operator may immediately identify leakage into one of these rooms and determine which subsystem must be shut down and secured to terminate the leak. The operator can readily accomplish this action from the main control room by stopping the appropriate subsystem pump and by closing the corresponding sump isolation valves and individual pump discharge valves. The time necessary for the operator to detect leakage into one of these rooms is dependent on the leakage rate. A limiting 50 gpm leak in the largest ECCS pump room can be detected within 30 minutes. Slower leaks will require proportionally longer detection times.

Leakage into the SIS or CVCS pump rooms, the pipe chase, or the pipe gallery (all at elevation 669) is piped through the floor drain header to the floor drain collector tank at elevation 653. ECCS leakage into the RHR or CS pump rooms or the pipe chase (all at elevation 653) is piped to the Auxiliary Building floor and equipment drain sump. The floor drain in each of these areas is provided with a standpipe which assures that the setpoint for the water level detector is reached prior to draining the leakage from the room. However, the standpipes each have drilled holes to allow minor normal leakage to drain from the room.

The Auxiliary Building floor and equipment drain sump is provided with redundant 50 gpm pumps which automatically start on high level. Pump flow can be directed to either the floor drain collector tank or to the tritiated drain collector tank. Operation of these pumps is indicated in the

main control room. The Auxiliary Building floor and equipment drain sump has a high level alarm which indicates in the main control room. If the waste disposal system is available, the operator can manually initiate processing of the contents of the tritiated drain collector tank or floor drain collector tank through the waste disposal system. If the waste disposal system is not available, both the tritiated drain and floor drain collector tanks can fill and discharge through overflow piping to the Auxiliary Building floor and equipment drain sump.

If the waste disposal system cannot keep up with the leak rate, when the Auxiliary Building floor and equipment drain sump (ABFEDS) fills up, the cross-tie valve (0-VLV-77-916) between the ABFEDS and the passive sump can be opened making available the volume of the passive sump to help contain the excessive flow.

Leakage into an ECCS pump or heat exchanger room can be detected by the flood detection system as described above. Leakage into areas other than these rooms can be detected by the flood detectors, by indication of sump pump operation, or by a high level alarm from the sump or the floor drain collector tank. However, the exact location of the leak, if from other than an ECCS pump or heat exchanger room, may not be immediately identified. Since ECCS leaks other than a pump seal failure are of a nature to develop very slowly and are less severe than a seal failure, the operator has an extended time period to detect and isolate the leak. Isolation of these minor leaks can be accomplished by arbitrarily selecting and isolating an ECCS subsystem and evaluating the response of the flood detector system. A factor which minimizes the probability of leakage into these areas is that the piping and valves in the RHR and CVCS systems are normally operated at temperatures and pressures which are greater than the post-accident conditions. Additionally the entire ECCS is periodically inspected as a part of the inservice inspection program.

The flood detection system described above is not designed to meet the requirements of IEEE 279-1971. The detectors, indicator panel, and control room alarm are single train and are powered from nondivisional boards. However, the system is designed such that a loss of power to any individual detector will be indicated on the indicator panel and will actuate the control room common alarm. Additionally, the nondivisional boards which supply the flood detection system are powered from a class IE power board which is automatically loaded on the diesel generators. This insures continued operability of the flood detection system following an accident.

In addition to the flood detection and normal drainage processing systems described above, water level sensor is provided in the Auxiliary Building passive sump (elevation 643). This sensor is designed to alarm in the main control room.

A determination of the time available for corrective operator action before functioning of the redundant train of ECCS equipment would be impaired was made based on the assumed continuous leakage rate of 50 gpm. An evaluation was made of the minimum time required to fill the passive sump (volume = 209,000 gallons) due to overflow of the tritiated drain collector tank. The calculated time of 2.6 days is conservative because no credit was taken for processing of leakage through the waste disposal system. An additional evaluation was made of the time available before the required NPSH for the redundant ECCS pumps would be lost due to decreasing water level in the reactor building sump. The calculated time of 5.3 days is conservative because no credit was taken for the volume of water which will be available due to melting of the ice condenser system ice. These time periods are much longer than the time necessary for the operator to detect and isolate the limiting 50 gpm leakage into an ECCS pump compartment.

With these design ground rules, continued function of the ECCS will meet minimum core cooling requirements. A single passive failure analysis is presented in Table 6.3.2-8. It demonstrates that the ECCS can sustain a single passive failure during the long term phase and still retain an

intact flow path to the core to supply sufficient flow to maintain the core covered and affect the removal of decay heat. The procedure followed to establish the alternate flow path also isolates the component which failed.

ECCS Intersystem Leakage

This subject is discussed in detail in subsection 5.2.7.8.

Leakage into the Cold Leg Accumulator Lines is detected by the two level sensors which are on each accumulator.

Leakage into the Safety Injection System is detected by the pressure sensors located in the two Safety Injection System pump discharge lines. If the pressure in these lines reaches 1750 psig the three pressure relief valves in the line will discharge to the pressurizer relief tank. The level sensor in the tank will indicate an increase. There is also a temperature sensor in the pressurizer relief tank which will show an increase.

There is no leakage problems into the Chemical and Volume Control System from the Reactor Coolant System due to the higher pressure at which the Chemical and Volume Control System is generally maintained.

Leakage into the Residual Heat Removal System may be detected by the pressure sensors in the Residual Heat Removal System pump discharge lines or instrumentation on the PRT. If pressure in these lines reaches 600 psig the relief valves will discharge to the pressurizer relief tank as described for Safety Injection System leakage.

Reactor Coolant System out leakage is also detected by monitoring of the Reactor Coolant System inventory and the inventory control operations.

6.3.2.12 Protection Provisions

The provisions taken to protect the system from damage that might result from dynamic effects are discussed in Section 3.6. The provisions taken to protect the system from missiles are discussed in Section 3.5. The provisions to protect the system from seismic damage are discussed in Sections 3.7, 3.9, and 3.10. Thermal stresses on the RCS are discussed in Section 5.2.

Emergency Core Cooling System Piping Failure

The rupture of the portion of an injection line from the last check valve to the connection of the line to the RCS can cause not only a loss of coolant but impair the injection as well. To reduce the probability of an emergency core cooling line rupture causing a loss of coolant accident, the check valves which isolate the ECCS from the RCS are installed immediately adjacent to the reactor coolant piping.

For a small break, the reactor pressure maintains a relatively uniform back pressure in all injection lines so that a significant flow imbalance does not occur. A rupture in the cold leg accumulator injection line is accounted for in the analyses by assuming that for cold leg breaks the entire contents of the associated accumulator is discharged from the break.

6.3.2.13 Provisions for Performance Testing

The provisions incorporated to facilitate performance testing of components are discussed in Subsection 6.3.4.

6.3.2.14 Net Positive Suction Head

The ECCS is designed so that adequate net positive suction head is provided to system pumps. Adequate net positive suction head is shown to be available for all pumps as follows:

1. Residual Heat Removal Pumps

The net positive suction head of the residual heat removal pumps is evaluated for normal plant shutdown operation, and for both the injection and recirculation modes of operation for the design basis accident. Recirculation operation gives the limiting net positive suction head requirement, and the net positive suction head available is determined from the containment pressure, vapor pressure of liquid in the sump, containment sump level relative to the pump elevation and the pressure drop in the suction piping from the sump to the pumps. The net positive suction head evaluation is based on all pumps operating at the maximum design flow rates. The residual heat removal pump head-capacity and net positive suction head curves are given in Figure 6.3.2-5.

2. Safety Injection and Centrifugal Charging Pumps

The net positive suction head for the safety injection pumps and the centrifugal charging pumps is evaluated for both the injection and recirculation modes of operation for the design basis accident. The end of the injection mode of operation gives the limiting net positive suction head available. The net positive suction head available is determined from the elevation head and vapor pressure of the water in the refueling water storage tank, which is at atmospheric pressure, and the pressure drop in the suction piping from the tank to the pumps. At the end of the injection mode when suction from the refueling water storage tank is terminated (low refueling water storage tank level), adequate net positive suction head is supplied from the containment sump by the booster action of the RHR pumps. The net positive suction head evaluation is based on all pumps operating at the maximum design flow rates. The head-capacity, and net positive suction head curves for the safety injection pumps are given in Figure 6.3.2-6. The head-capacity and net positive suction head curves for the charging pumps are given in Figure 6.3.2-7.

6.3.2.15 Control of Motor-Operated Isolation Valves

The design of the control circuit for the motor operated isolation valves in the lines connecting a cold leg accumulator to the RCS provides protection against inadvertent closure. The cold leg accumulator isolation valves are FCV-63-118, accumulator 1 (train A), FCV-63-98, accumulator 2 (train B), FCV-63-80, accumulator 3 (train A), and FCV-63-67, accumulator 4 (train B). During heatup and pressurization of the RCS, these valves are manually opened in accordance with technical specification requirements. After the valves are opened, electrical power is removed to prevent inadvertent valve closure. During cooldown, electrical power is restored so that the valves can be manually closed from the main control room when allowed by technical specifications. Control power and therefore position indication is retained when motor power is removed to provide for main control room indication of valve position. Although the valves are normally open during operation, they receive a safety injection signal to open. These valves are also automatically opened when the system pressure exceeds the P-11 permissive level (1970 psig).

6.3.2.16 Motor Operated Valves and Controls

Remotely operated valves for the injection mode which are under manual control (i.e., valves normally in the ready position not requiring an SIS signal) have their positions indicated on a common portion of the control board. If a component is out of its proper position, its status monitor light will indicate this on the status monitor control panel. At any time during operation

when one of the valves is not in the ready position for injection, this condition is shown visually on the board, and an audible alarm is sounded in the main control room. The motor-operated isolation valves located between the high pressure RCS and the relatively low pressure RHRS are discussed in Subsections 5.5.7 and 7.6.2.

6.3.2.17 Manual Actions

No manual actions are required during the injection phase except for the Shutdown LOCA (SDLOCA) where the operator must manually establish sufficient ECCS flow. Actions required by the operator for proper ECCS operation following injection are those required to realign the system for cold leg recirculation and hot leg recirculation mode of operation.

During a Shutdown LOCA initiated after the RHR is aligned for shutdown cooling, the RHR pump suction piping might have to be cooled prior to starting the RHR pumps using either the RWST or the Containment Sump as the suction source. The cooling might be necessary in order to ensure that the RHR pumps have adequate NPSH and to ensure that potential steam voids in the RHR system piping cannot cause a waterhammer event or damage to the RHR pump. The cooling might also be necessary to ensure that the Containment Spray pumps have adequate NPSH when being realigned to the containment Sump.

6.3.2.18 Process Instrumentation

Process instrumentation available to the operator in the control room to assist in assessing post loss of coolant accident conditions are tabulated in Section 7.5.

6.3.2.19 Materials

Materials employed for components of the ECCS are given in Table 6.3.2-6. These materials are chosen based upon their ability to resist radiolytic and pyrolitic decomposition. (See Subsection 6.3.2.4) Coatings specified for use on the ECCS components (mainly, the cold leg accumulators) are designated to meet the requirements of ANSI 101.2-1972; "Protective Coatings (Paints) For Light Water Nuclear Reactor Containment Facilities," as a minimum.

6.3.3 Performance Evaluation

6.3.3.1 Evaluation Model

The following analyses are performed to ensure that the limits on core behavior following a RCS pipe rupture are met by the ECCS operating with minimum design equipment:

1. Large pipe break analysis
2. Small line break analysis
3. Main steam system line rupture
4. Recirculation cooling

The flow delivered to the RCS by the ECCS as a function of reactor coolant pressure with the operation of minimum design equipment is analyzed in Section 15.4.

The design basis performance characteristic is derived from the specified performance characteristic for each pump with a conservative estimate of system piping resistance, based upon piping layout for the flow diagram illustrated in Figure 6.3.2-1.

The performance characteristic utilized in the accident analyses includes a 5 percent decrease in the design head for margin. When the initiating incident is assumed to be the severance of an injection line the injection curve utilized in the analysis accounts for the loss of injection water through the broken line.

6.3.3.2 ECCS Performance

The large pipe break analysis is used to evaluate the initial core thermal transient for a spectrum of pipe ruptures from a break size of 0.5 ft^2 up to the double ended rupture of the largest pipe in the Reactor Coolant System.

The injection flow from active components is required to control the cladding temperature subsequent to accumulator injection, complete reactor vessel refill, and eventually return the core to a subcooled state. The results indicate that the maximum cladding temperature attained at any point in the core is such that the limits on core behavior as specified in Section 15.4 are met.

A flow balance test shall be performed during shutdown following action of modifications to the ECCS subsystem that alter the subsystem flow characteristics and verifying the following flow rates:

1. For safety injection pump lines with a single pump running:

   a. The sum of the injection line flow rates, excluding the highest flow rate is greater than or equal to 443 gpm, and

   b. The total pump flow rate is less than or equal to 675 gpm.

2. For centrifugal charging pump lines with a single pump running:

   a. The sum of the injection line flow rates, excluding the highest flow rate is greater than or equal to 309 gpm, and

   b. The total pump flow rate is less than or equal to 555 gpm.

3. For all four cold leg injection lines with a single RHR pump running a flow rate greater than or equal to 3931 gpm.

6.3.3.3 Alternate Analysis Methods

The small pipe break analysis is used to evaluate the initial core thermal transient for a spectrum of pipe rupture from 3/8 inch up to and including the rupture of a six inch diameter pipe. For breaks 3/8 inch or smaller (except those in the PRZ vapor space), the charging system can maintain the pressurizer level and the Reactor Coolant System operating pressure and the Emergency Core Cooling System would not be actuated.

The results of the small pipe break analysis indicate that the limits on core behavior are adequately met, as shown in Section 15.3.

Main Steam System Single Active Failure

Analyses of reactor behavior following any single active failure in the main steam system which results in an uncontrolled release of steam are included in Section 15.2. The analyses assume that a single valve (largest of the safety, relief, or bypass valves) opens and fails to close, which results in an uncontrolled cooldown of the Reactor Coolant System.

Results indicate that if the incident is initiated at the hot shutdown condition, which results in the highest reactivity worth, the DNB criteria is satisfied. Thus, the Emergency Core Cooling System provides adequate protection for this incident.

Steam Line Rupture

Following a steam line rupture the Emergency Core Cooling System is automatically actuated to deliver borated water from the RWST to the Reactor Coolant System. The response of the Emergency Core Cooling System following a steam line break is identical to its response during the injection mode of operation following a loss of coolant accident.

This accident is discussed in detail in Section 15.4 the limiting steam line rupture is a complete line severance.

In the case of a steam line rupture when offsite power is not assumed lost, credit is taken for the uninterrupted availability of power for the Emergency Core Cooling System components.

The results of the analysis in Section 15.4 indicate that the design basis criteria are met. Thus, the Emergency Core Cooling System adequately fulfills its shutdown reactivity addition function.

A technical specification is established to ensure the availability of the RWST which provides the shutdown reactivity.

The safety injection actuation signal initiates identical actions as described for the injection mode of the loss of coolant accident, even though not all of these actions are required following a steam line rupture, e.g., the residual heat removal pumps are not required since the Reactor Coolant System pressure will remain above their shutoff head.

The delivery of borated water from the RWST results in a negative reactivity change to counteract the increase in reactivity caused by the system cooldown. The charging pumps continue to deliver borated water from the refueling water storage tank, until enough water has been added to the Reactor Coolant System to make up for the shrinkage due to cooldown. The safety injection pumps also deliver borated water from the refueling water storage tank for the interval when the Reactor Coolant System pressure is less than the shutoff head of the safety injection pumps. After pressurizer water level has been restored, the injection is manually terminated. A high pressurizer water level alarm in the control room would warn the operator to terminate injection flow if this were not done previously.

The sequence of events following a postulated steam line break is described in Section 15.4.

6.3.3.4 Fuel Rod Perforations

Discussions of peak clad temperature and metal-water reactions appear in Subsections 15.3.1 and 15.4.1. Analyses of the radiological consequences of RCS pipe ruptures also are presented in Subsection 15.5.

6.3.3.5 Evaluation Model Does not apply to this plant (BWRs only).

6.3.3.6 Fuel Clad Effects Does not apply to this plant (BWRs only).

6.3.3.7 ECCS Performance Does not apply to this plant (BWRs only).

6.3.3.8 Peak Factors Does not apply to this plant (BWRs only).

6.3.3.9 Fuel Rod Perforations Does not apply to this plant (BWRs only).

6.3.3.10 Conformance With Interim Acceptance Criteria Does not apply to this plant (BWRs only).

6.3.3.11 Effects of ECCS Operation on the Core

The effects of the ECCS operation on the reactor core are discussed in Sections 15.3 and 15.4.

6.3.3.12 Use of Dual Function Components

The Emergency Core Cooling System contains components which have no other operating function as well as components which are shared with other systems and perform normal operating functions. Components in each category are as follows:

1. Components of the Emergency Core Cooling System which perform no other function are:

a. One accumulator for each loop which discharges borated water into its respective cold leg of the reactor coolant loop piping.

b. Two safety injection pumps which supply borated water for core cooling to the Reactor Coolant System. These pumps are also used for filling the accumulators.

c. Associated piping, valves and instrumentation.

2. Components which also have a normal operating function are as follows:

a. The residual heat removal pumps and the residual heat exchangers:
These components are normally used during the latter stages of normal reactor cooldown and when the reactor is held at cold shutdown or refueling for core decay heat removal. However, during all other plant operating periods, they are aligned to perform the low head injection function.

b. The centrifugal charging pumps: These pumps are normally aligned for RCP seal injection and charging service as part of the Chemical and Volume Control System. The normal operation of these pumps is discussed in Section 9.3.4.

c. The refueling water storage tank: This tank is used to fill the refueling canal for refueling operations. It is normally aligned to the suction of the safety injection pumps and the residual heat removal pumps for the ECCS function and to the suction of containment spray pumps. It is normally isolated from the RHR pump suction when the RHR pumps are aligned to the RCS for shutdown cooling. The RWST may be aligned to the RCS during RCS drain and fill operations. The charging pumps are aligned to the suction of the refueling water storage tank upon receipt of the safety signal.

An evaluation of all components required for operation of the Emergency Core Cooling System demonstrates that either:

1. The component is not shared with other systems, or

2. If the component is shared with other systems, it is aligned during normal plant operation to perform its accident function; or if not aligned to its accident function, two valves in parallel are provided to align the system for injection, and two valves in series are provided to isolate portions of the system not utilized for injection. These valves are automatically actuated by the safety injection signal.

Table 6.3.3-1 indicates the alignment of major components during normal operation, and the realignment required to perform the accident function.

<u>Dependence on Other Systems</u>

Other principal systems which operate in conjunction with the Emergency Core Cooling System are as follows:

1. The Component Cooling System cools the residual heat exchangers during the recirculation mode of operation. It also supplies cooling water to the mechanical seal coolers for the centrifugal charging pumps and the safety injection pumps, and the seal water heat exchangers for the residual heat removal pumps.

2. The Essential Raw Cooling Water System provides cooling water to the component cooling heat exchangers, various coolers for the centrifugal charging pumps and the safety injection pumps, and the ESF equipment room coolers.

3. The electrical systems provide normal and emergency power sources for the Emergency Core Cooling System.

4. The Engineered Safety Features Actuation System generates the initiation signal for emergency core cooling.

5. The Auxiliary Feedwater System supplies feedwater to the steam generators.

Limiting Conditions for Operation

The design philosophy with respect to active components in the high head/low head injection system is to provide backup equipment so that maintenance is possible during operation, in accordance with Technical Specification Action limitations, without impairment of the safety function of the system.

6.3.3.13 Lag Times

The minimum active components will be capable of delivering full rated flow within a specified time interval after process parameters reach the setpoints for the safety injection signal. Response of the system is automatic, with appropriate allowances for delays in actuation of circuitry and active components. The active portions of the system are actuated by the safety injection signal. In analyses of system performance, delays in reaching the programmed trip points and in actuation of components are established on the basis that only emergency onsite power is available. A further discussion of the starting sequence is given in Subsection 8.3.1.

In the loss of coolant accident analysis presented in Sections 15.3 and 15.4, no credit is assumed for partial flow prior to the establishment of full flow. In addition, for the small break analysis in Section 15.3, no credit is assumed for the availability of offsite power sources.

For smaller loss of coolant accidents, there are some additional delays before the process variables reach their respective programmed trip setpoints since this is a function of the severity imposed by the accident. Allowances are made for this in the analyses of the spectrum of reactor coolant pipe breaks.

6.3.3.14 Thermal Shock Considerations

Thermal shock considerations are discussed in Section 5.2.

6.3.3.15 Limits on System Parameters

A comprehensive testing program has been undertaken to demonstrate that the Emergency Core Cooling System components and associated instrumentation and electrical equipment which are located inside the containment will operate for the time period required in the combined post loss of coolant accident conditions of temperature, pressure, humidity, radiation, and chemistry (Reference 1). Components such as remote motor operated valves and flow and pressure transmitters have been shown capable of operating for the required post-accident periods, when exposed to post loss of coolant environmental conditions.

The specification of individual parameters as given in Table 6.3.2-1 includes due consideration of allowances for margins over and above the required performance value (e.g., pump flow and net positive suction head), and the most severe conditions to which the component could be subjected (e.g., pressure, temperature, and flow).

This consideration ensures that the Emergency Core Cooling System is capable of meeting its minimum required level of functional performance.

6.3.4 Tests and Inspections

Performance tests of the components are performed in the manufacturer's shop. An initial pre-operational system flow test is performed to demonstrate the proper functioning of all of the components. In order to demonstrate the readiness and operability of the Emergency Core Cooling System, components are subjected to periodic tests and inspections in accordance with the ASME Section XI programs and the 10CFR50 Appendix J program as required. The Emergency Core Cooling System components are designed and fabricated to permit inspection and in-service tests in accordance with ASME Code Section XI.

Quality Control

Tests and inspections are carried out during fabrication of each of the Emergency Core Cooling System components. These tests are conducted and documented in accordance with the Quality Assurance program discussed in Chapter 17.

Pre-Operational Tests

These tests are intended to evaluate the hydraulic and mechanical performance of the passive and active components involved in the injection mode by demonstrating that they have been installed and adjusted so they will operate in accordance with the design intent. These tests are divided into three individual sections that may be performed as plant conditions allow without compromising the integrity of the tests.

One of these individual sections consists of system actuation tests to verify: The operability of all Emergency Core Cooling System valves initiated by the safety injection "S" signal, the phase A containment isolation "T" signal; the operability of all safeguard pump circuitry down through the pump breaker control circuits; and the proper operation of all valve interlocks.

Another of the individual sections is the accumulator injection test. The objective of this section is to check the accumulator injection line to verify that the lines are free from obstructions and that the accumulator check valves operate correctly. The test objectives will be met by a low pressure blowdown of each accumulator. The cold leg accumulator test was performed with the reactor head and internals removed.

The last of the individual sections consists of operational tests of all of the major pumps - i.e., the charging pumps, the residual heat removal pumps, and the safety injection pumps. The purpose of these tests is to evaluate the hydraulic and mechanical performance of the pumps delivering through the flow paths required for emergency core cooling. These tests will be divided into two parts: pump operation under mini flow conditions and pump operation at full flow conditions. The predicted system resistance will be verified by measuring the flow in each piping branch, as each pump delivers from the refueling water storage tank to the open reactor vessel, and adjustment made where necessary to assure that no one branch has an unacceptably low or high resistance. During this flow test, the system will also be checked to assure there is sufficient total line resistance to prevent excessive run out of the pump. At the completion of the flow test, the total pump flow and relative flow between the branch lines will be compared with the minimum acceptable flows as determined for the safety analysis.

The systems are accepted only after demonstration of proper actuation of all components and after demonstration of flow delivery of all components within design requirements.

Periodic Component Testing

Routine periodic testing of the Emergency Core Cooling System components and necessary support systems is performed in accordance with plant Technical Specifications. Components not covered by Technical Specifications may also be periodically tested at power in accordance with approved plant maintenance program procedures.

Pumps and valves are periodically tested in accordance with Technical Specifications and ASME Section XI. If such testing indicates a need for corrective maintenance, the redundancy of equipment in these systems permits such maintenance to be performed without shutting down or reducing load under certain conditions as permitted by Technical Specifications.

Containment drainage paths from accumulator rooms 3 and 4 to the containment sump are verified unblocked each refueling outage. This verification is in accordance with plant procedure. This test is in compliance with the response to NRC Bulletin 2003-01.

Test lines are provided for periodic measurement of the leakage of reactor coolant back through the accumulator discharge line check valves and to ascertain that these valves seat whenever the Reactor Coolant System pressure is raised. These tests are routinely performed in accordance with Technical Specifications and ASME Section XI when the reactor is being returned to power after an outage and

the reactor pressure is raised above the accumulator pressure. To implement the periodic component testing requirements, the SQN Technical Specifications have been established. During periodic system testing, a visual inspection of assessable pump seals, valve packings, flanged connections, and relief valves can be made to detect leakage. Inservice inspection provides further confirmation that no significant deterioration is occurring in the Emergency Core Cooling System fluid boundary.

Design measures have been taken to assure that the following testing can be performed:

1. Active components may be tested periodically for operability (e.g., pumps on mini flow, certain valves, etc.).

2. An integrated system actuation test can be performed when the plant is cooled down and the Residual Heat Removal System is in operation. The Emergency Core Cooling System can be arranged so that no flow will be introduced into the Reactor Coolant System for this test. Details of the testing of the sensors and logic circuits associated with the generation of a safety injection signal together with the application of this signal to the operation of each active component are given in Section 7.2.

3. An initial flow test of the full operational sequence can be performed.

The design features which assure this test capability are specifically:

1. Power sources are provided to permit individual actuation of each active component of the Emergency Core Cooling System.

2. The safety injection pumps can be tested periodically during plant operation using the minimum flow recirculation lines provided.

3. The residual heat removal pumps are used every time the Residual Heat Removal System is put into operation. They can also be tested periodically using the miniflow recirculation lines.

4. The centrifugal charging pumps are either normally in use for charging service or can be tested periodically on miniflow or charging flow.

5. Remote operated valves can be exercised.

6. Level and pressure instrumentation are provided for each accumulator tank, for continuous monitoring of these parameters during plant operation.

7. Flow from each accumulator tank can be directed through a test line to determine check valve leakage.

8. A flow indicator is provided in the safety injection pump header, and in the residual heat removal pump headers. Pressure instrumentation is also provided in these lines.

9. An integrated system test can be performed during shutdown to demonstrate the operation of the valves, pump circuit breakers, and automatic loading of Emergency Core Cooling System components on the diesels (by simultaneously simulating a loss of offsite power to the vital electrical buses).

6.3.5 Instrumentation Application

6.3.5.1 Temperature Indication

Residual Heat Exchanger Inlet and Outlet Temperature

The fluid temperature at the inlet and outlet of each residual heat exchanger is recorded in the main control room.

the reactor pressure is raised above the accumulator pressure. To implement the periodic component testing requirements, the SQN Technical Specifications have been established. During periodic system testing, a visual inspection of assessable pump seals, valve packings, flanged connections, and relief valves can be made to detect leakage. Inservice inspection provides further confirmation that no significant deterioration is occurring in the Emergency Core Cooling System fluid boundary.

Design measures have been taken to assure that the following testing can be performed:

1. Active components may be tested periodically for operability (e.g., pumps on mini flow, certain valves, etc.).

2. An integrated system actuation test can be performed when the plant is cooled down and the Residual Heat Removal System is in operation. The Emergency Core Cooling System can be arranged so that no flow will be introduced into the Reactor Coolant System for this test. Details of the testing of the sensors and logic circuits associated with the generation of a safety injection signal together with the application of this signal to the operation of each active component are given in Section 7.2.

3. An initial flow test of the full operational sequence can be performed.

The design features which assure this test capability are specifically:

1. Power sources are provided to permit individual actuation of each active component of the Emergency Core Cooling System.

2. The safety injection pumps can be tested periodically during plant operation using the minimum flow recirculation lines provided.

3. The residual heat removal pumps are used every time the Residual Heat Removal System is put into operation. They can also be tested periodically using the miniflow recirculation lines.

4. The centrifugal charging pumps are either normally in use for charging service or can be tested periodically on miniflow or charging flow.

5. Remote operated valves can be exercised.

6. Level and pressure instrumentation are provided for each accumulator tank, for continuous monitoring of these parameters during plant operation.

7. Flow from each accumulator tank can be directed through a test line to determine check valve leakage.

8. A flow indicator is provided in the safety injection pump header, and in the residual heat removal pump headers. Pressure instrumentation is also provided in these lines.

9. An integrated system test can be performed during shutdown to demonstrate the operation of the valves, pump circuit breakers, and automatic loading of Emergency Core Cooling System components on the diesels (by simultaneously simulating a loss of offsite power to the vital electrical buses).

6.3.5 Instrumentation Application

6.3.5.1 Temperature Indication

Residual Heat Exchanger Inlet and Outlet Temperature

The fluid temperature at the inlet and outlet of each residual heat exchanger is recorded in the main control room.

Refueling Water Storage Tank (RWST) Temperature

Two temperature channels are provided to monitor the RWST temperature. Both are indicated in the main control room. A high/low temperature alarm is provided in the main control room.

6.3.5.2 Pressure Indication

CCP Injection Tank Pressure

CCP injection tank outlet pressure is indicated in the main control room. A high pressure alarm is provided.

Safety Injection Header Pressure

Safety injection pump discharge header pressure is indicated in the main control room.

Cold Leg Accumulator Pressure

Duplicate pressure channels are installed on each cold leg accumulator. Pressure indication in the control room and high and low pressure alarms are provided by each channel.

Residual Heat Removal Pump Discharge Pressure

Residual heat removal discharge pressure for each pump is indicated in the main control room. A high pressure alarm is actuated by each channel.

6.3.5.3 Flow Indication

Charging Pump Injection Header Flow

The total centrifugal charging pump injection flow, which discharges to the cold leg injection header, is indicated in the main control room.

Residual Heat Removal Pump Injection Flow

Flow through each residual heat removal injection and recirculation header leading to the reactor cold or hot legs is indicated in the main control room.

Test Line Flow

“Bucket testing” or an alternate flow measurement device can be used to determine test line flow to verify proper seating of the accumulator check valves between the injection lines and the reactor coolant system.

Residual Heat Removal Pump Minimum Flow

Installed in each residual heat removal pump discharge header is a local flow meter and flow switches for miniflow valve control.

6.3.5.4 Level Indication

Refueling Water Storage Tank Level

Six water level indicator channels, which indicate in the main control room, are provided for the refueling water storage tank. Four wide range channels alarm on low and low-low water levels,

and are indicated on the main control board. Two narrow range channels are also provided with low and high-level alarms indicated on the main control board.

Accumulator Water Level

Duplicate water level channels are provided for each accumulator. The channels monitoring the level in the cold leg accumulators do so directly. Both channels provide indication, for each accumulator, in the main control room and actuate high and low water level alarms.

Containment Sump Water Level

Four containment sump water level indicator channels provide the main control room with water level indication.

6.3.5.5 Valve Position Indication

Valve positions are indicated on the control board such that a valve not in its proper position will cause a white monitor light to illuminate and thereby give a highly visible indication to the operator.

Valve position is also indicated by a second system employing a "red-green" light system on the control board. Thus should any bulb fail in service, the true position of the valve can still be determined.

Accumulator Isolation Valve Position Indication

The accumulator isolation valves are provided with red (open) and green (closed) position indication lights located at the control switch for each valve. These lights are powered by valve control power and actuated by valve motor operator limit switches.

A monitor light that is on when the valve is not fully open is provided in an array of monitor lights that are all off when their respective valves are in proper position enabling safeguards operation. This light is energized from a separate monitor light supply and actuated by a valve motor operated limit switch.

An alarm annunciator point is activated by both a valve motor operator limit switch and by a valve position limit switch activated by stem travel whenever an accumulator valve is not fully open for any reason with the system at pressure (the pressure at which the safety injection block is unblocked). A separate annunciator point is used for each accumulator valve. This alarm will be recycled at approximately one hour intervals to remind the operator of the improper valve lineup.

Refueling Water Storage Tank Isolation Valve

The control and indications provided for these valves are identical to those provided for the cold leg accumulator isolation valves, with the exception that a safety injection signal is not applied to the valves between the safety injection pumps, and residual heat removal pumps, and the refueling water storage tank.

6.3.6 References

1. Westinghouse Topical Report, "Environmental Testing of Engineered Safety Features Related Equipment (NSSS-Standard Scope)," NCAP-7774, Volume 1, August 1971.

2. ASME Section XI Program Basis Documents for Sequoyah Nuclear Plant.

3. SQN Design Criteria SQN-DC-V-27.3, “Safety Injection System.”

4. Valve Packing Maintenance and Program Practices-Update to 3002005353, EPRI, Palo Alto, Ca: 2016. 3002008059.

TABLE 6.3.2-1 (Sheet 1)

EMERGENCY CORE COOLING SYSTEM COMPONENT PARAMETERS

Component		Parameters
Cold Leg Injection Accumulators	Number	4
	Design Pressure, psig	700
	Design Temperature, °F	300
	Operating Temperature, °F	60-150
	Minimum Operating Pressure psig	624
	Maximum Operating Pressure psig	668
	Tank Volume ft^3	1,350 each
	Contained Water Volume, operating conditions, gals	7,615- 7,960
	Volume $Nitrogen_2$ gas, ft^3	350
	Boric Acid Concentration, ppm	2,400 minimum 2,700 maximum
	Relief Valve Setpoint, psig	700
Centrifugal Charging Pumps	Number	2
	Design pressure, psig	2,800
	Design Temperature °F	300
	Design Head, ft.	5,800
	Max. Flow Rate, gpm (See Figure 6.3.2-7)	550*
	Head at maximum flow rate, ft	1,400
	Discharge pressure at shutoff, psig	2,670
	NPSH required (max.), ft	21.5
	Motor capacity, hp	600
Safety Injection Pumps	Type	Centrifugal
	Number	2
	Design pressure, psig	1,750
	Design Temperature, °F	300
	Design Head, ft.	2,500
	Max. Flow Rate, gpm	650*
	Head at max. flow rate, ft	1,650
	Discharge pressure at shutoff, psig	1,520
	NPSH required at max. flow rate, ft	26.25
	Motor capacity hp	400

*Values greater than this value may exist depending on system resistance, pump NPSH requirements (pump supplier guarantee based on certified flow test), and NPSH availability to provide adequate margin, e.g., 555 gpm for a charging pump and 675 gpm for a safety injection pump (cold leg inject.).

Residual Heat Removal Pumps	Refer to Subsection 5.5.7 for parameter information.
Residual Heat Exchangers	Refer to Subsection 5.5.7 for parameter information.

TABLE 6.3.2-1 (Sheet 2)

EMERGENCY CORE COOLING SYSTEM COMPONENT PARAMETERS

Component		Parameters
CCP Injection Tank	Number	1
	Volume, gal.	900
	Design Pressure, psig	2,735
	Design Temperature, °F	300
Refueling Water Storage Tank	Number	1
	Contained Water Volume, gals.	370,000 minimum 375,000 maximum
	Design Pressure, psig	Atmospheric
	Design Temperature, °F	120

TABLE 6.3.2-1 (Sheet 3)

EMERGENCY CORE COOLING SYSTEM COMPONENT PARAMETERS

Valves	Valve operating time
1. All Motor-Operated Valves Which Must Function on SI Signal.	"Fast Operation"
a. Up to and including 8 inches, sec.	10
b. Over 8 inches, sec.	Nominal Size (inch) x 60 / 49 inches/min
2. All Other Motor-Operated Valves. "Slow" operation	
a. Up to and including 8 inches, sec.	Nominal size (inch) x 60 / 12 inch/min.
b. 0ver 8 inches, sec.	120

3. Exceptions to criteria 1 & 2, valve maximum allowable stroke time (MAST):

VALVE	FUNCTION	MAST (sec.)
FCV-62-90/91	CHARGING LINE ISOL. VALVE	12
LCV-62-135/136	CCP SUCT. FROM RWST	15
1-FCV-63-72/73	CONT. SUMP ISOL. VALVE	120
2-FCV-63-72/73	CONT. SUMP ISOL. VALVE	120
FCV-63-25/26	CCP INJ. TNK. ISOL.VALVES	25
FCV-63-39/40	CCP INJ. TNK. ISOL.VALVES	25

4. Leakage: Actual inservice leak rates will be limited, as required, by the plant Tech Specs.

		Leakrate
a. Conventional Globe Valves	Disk Leakage, cc/hr/in of nominal pipe size	3
	Backseat Leakage, cc/hr/in of stem diameter	0
b. Gate Valves	Disk Leakage, cc/hr/in of nominal pipe size	3
	Backseat Leakage, cc/hr/in of stem diameter	0
c. Check Valves:	Disk Leakage, cc/hr/in of nominal pipe size	3
d. Diaphragm Valves:	Disk Leakage	none
e. Pressure Relief Valves:	Disk Leakage, cc/hr/in of nominal pipe size	3
f. Accumulator Check Valves	Disk Leakage, cc/hr/in of nominal pipe size	3

TABLE 6.3.2-2

ECCS RELIEF VALVE DATA

Description & Valve ID No.	Fluid Discharged	Fluid Inlet Temp., °F Normal	Fluid Inlet Temp., °F Relieving	Set Pressure PSIG	Constant Back Pressure PSIG	Developed Back Pressure PSIG	Relief Valve Capacity
SI Pump Discharge (63-534, -536 & -535)	Borated Water	100	100	1750	3	50	20 gpm
Injection Tank Discharge Line (63-577)	Borated Water	130	130	2735	3	12	20 gpm
RHR Pump Discharge to SIS (63-626 and -627)	Borated Water	114	400	600	3	50	400 gpm
SI Pump Combined Suction Line (63-511)	Borated Water	100	270	220	3	50	25 gpm
Cold leg Accumulator Tanks to Containment (63-602,-603,-604&-605)	Nitrogen Gas	120	120	700	0	0	1500 scfm
RHR Pump Discharge to Hot Leg Injection (63-637)	Borated	250	350	600	3	50	20 gpm

TABLE 6.3.2-3

NORMAL OPERATING STATUS OF EMERGENCY CORE COOLING SYSTEM COMPONENTS FOR CORE COOLING

Number of Safety Injection Pumps Operable	2
Number of Charging Pumps Operable	2
Number of Residual Heat Removal Pumps Operable	2
Number of Residual Heat Exchangers Operable	2
Refueling Water Storage Tank Volume, gals.	370,000 min 375,000 max
Boron Concentration in Refueling Water Storage Tanks, ppm	2,500 min- 2,700 max
Boron Concentration in Cold Leg Accumulator, ppm	2,400 min- 2,700 max
Number of Accumulators	4
Cold Leg Accumulator Pressure, psig	624 - 668
Cold Leg Accumulator Water Volume, gals	7615 min 7960 max
System Valves, Interlocks, and Piping Required for the Above	
Components which are Operable	All

TABLE 6.3.2-4 (Sheet 1)

SEQUENCE OF CHANGEOVER OPERATION

SEQUENCE OF CHANGEOVER OPERATION FROM
INJECTION TO RECIRCULATION FOR THE RHR SYSTEM

NOTE: Sequence of the first three actions in the following list may be changed to optimize procedure step sequence.

1. Check RHR System by verifying the RHR pumps are running.

2. Establish CCS to RHR Heat Exchangers, Panel M-27b, by opening the component cooling water isolation valve to each RHR heat exchanger (FCV-70-153, 156).

3. Verify automatic switchover when RWST level is low (130 inches) and containment sump level is high (30 inches above elevation 680') by verifying the containment sump valves FCV-63-72, 73 start to open at the same time RWST-RHR suction valves FCV-74-3 and 21 are starting to close.

4. Close SI pump miniflow valves (FCV-63-3, 4, 175).

5. Close the two valves in the crossover line downstream of the RHR heat exchangers (FCV-74-33, 35).

6. Open the 2 parallel valves in the common suction line between the charging pump suction and the safety injection pump suction (FCV-63-6, 7).

7. Open the valve in the line from the train A RHR pump discharge to the charging pump and train A SI pump suction (FCV-63-8) and the valve in the line from the train B RHR pump discharge to the train B safety injection pump suction (FCV-63-11).

8. Reset the SIS signal at the system level.

9. Close the two parallel valves in the line from the RWST to the charging pump suction (FCV-62-135, 136).

10. Close RHR suction from RWST by restoring power to FCV-63-1 (Rx MOV Bd A1-1) then closing it.

11. Close the valve in the line from the RWST to the Safety injection pump suction (FCV 63-5).

TABLE 6.3.2-4 (Sheet 2)

SEQUENCE OF CHANGEOVER OPERATION

SEQUENCE OF CHANGEOVER OPERATION FROM
INJECTION TO RECIRCULATION FOR CONTAINMENT SPRAY SYSTEM

1. Stop both containment spray pumps ("pull to lock in stop" to preclude the possibility of pump restart while realigning suction valves).

2. Open the essential raw cooling water isolation valves to each containment spray heat exchanger (FCV-67-125, 126, 123, 124). This action may be initiated early (prior to stopping containment spray pumps).

   NOTE: Individual trains may be realigned and restarted in series to minimize the time with no spray flow.

3. Close the spray pump/RWST isolation valve at the suction of each containment spray pump (FCV-72-22 and 21).

4. Open the sump isolation valve at the suction of each containment spray pump (FCV-72-23, 20).

5. Verify containment spray suction valves are open (Train A FCV-63-72, FCV-72-23; Train B FCV-63-73, FCV-72-20).

6. Start containment spray pumps and verify containment spray flow (FI-72-34, 13).

TABLE 6.3.2-4 (Sheet 3)

SEQUENCE OF CHANGEOVER OPERATION

REALIGNMENT OF ECCS FROM COLD LEG RECIRCULATION MODE TO THE HOT LEG RECIRCULATION MODE

1. Aligning RHR Train A for Hot Leg Recirculation (Train B similar)

   a. CLOSE RHR Train A cold leg isolation FCV-63-93

   b. Verify RHR Train B discharge crosstie valve CLOSED FCV-74-35

   c. OPEN RHR Train A discharge crosstie valve FCV-74-33

   d. OPEN RHR hot leg injection FCV-63-172

   e. Verify RHR hot leg flow on FI-63-173

   f. Close RHR Train B cold leg isolation valve FCV-63-94

2. Aligning SI Pumps For Hot Leg Recirculation

   a. STOP SI Pump A-A

   b. CLOSE Train A crosstie FCV-63-152

   c. Verify FCV-63-152 CLOSED, then OPEN Train A hot leg injection FCV-63-156

   d. START SI Pump A-A and verify Train A hot leg flow on FI-63-151

   e. STOP SI Pump B-B

   f. CLOSE Train B crosstie FCV-63-153

   g. Verify FCV-63-153 CLOSED, then OPEN Train B hot leg injection FCV-63-157

   h. START SI pump B-B and verify Train B hot leg flow on FI-63-20

   i. Check power available and CLOSE SI pump cold leg injection FCV-63-22

TABLE 6.3.2-5

MAXIMUM POTENTIAL RECIRCULATION LOOP LEAKAGE EXTERNAL TO CONTAINMENT

	Items	Type of Leakage Control and Unit Leakage Rate Used in the Analysis	Leakage to Atmosphere cc/hr	Leakage to Drain Tank cc/hr
1.	Residual Heat Removal Pumps (Low Head Safety Injection)	Mechanical seal with leakoff-10 cc/hr/seal. Acceptance tested to essentially zero leakage	0	20
2.	Safety Injection Pumps	Same as residual heat removal pump	0	40
3.	Charging Pumps	Same as residual heat removal pump	0	40
4.	Flanges:			
	a. Pumps	Gasket - adjusted to zero	0	0
	b. Valves Bonnet to Body	leakage following any test		0
	(larger than 2")	10 drops/min/gauge used	2,400	0
	c. Control Valves	(30cc/hr). Due to leak tight	480	
		flanges on pumps, no leakage		0
	d. Heat Exchangers	is assumed to atmosphere	240	0
5.	Valves - Stem Leakoffs	Back seated double packing with leakoff - 1 cc/hr/in. stem diameter used (see Table 6.3.2-1)*	0	50
6.	Misc. Small Valves	Flanged body packed stems - 1 drop/min used (3cc/hr)*	600	0
7.	Misc. Large Valves (Larger than 2")	Double packing 1cc/hr/in. stem diameter used*	40	0

*Some valves may have their leakoff line connections plugged after packing has been upgraded with graphite packing rings. These new configurations and materials provide improved sealing abilities to reduce the possibilities of stem leakage.

TABLE 6.3.2-6

MATERIALS EMPLOYED FOR EMERGENCY CORE COOLING SYSTEM COMPONENTS

Component	Material
Cold leg Accumulators	Carbon Steel, Clad with Austenitic Stainless Steel
Pumps -	
Centrifugal charging	Austenitic Stainless Steel
Safety Injection	Austenitic Stainless Steel
Residual Heat Removal	Austenitic Stainless Steel
Residual Heat Exchangers -	
Shell	Carbon Steel
Shell End Cap	Carbon Steel
Tubes	Austenitic Stainless Steel
Channel	Austenitic Stainless Steel
Channel Cover	Austenitic Stainless Steel
Tube Sheet	Forged Carbon Steel with Stainless Steel Weld Overlay Face
Valves	
Motor Operated Valves Containing Radioactive Fluids	
Pressure Containing Parts	Austenitic Stainless Steel or Equivalent
Body-to-bonnet Bolting & Nuts	Low alloy steel
Seating Surfaces	Stellite No. 6 or Equivalent
Stems	Austenitic Stainless Steel or, 17-4PH Stainless
Motor Operated Valves Containing Non-Radioactive, Boron - Free Fluids	
Body, Bonnet and Flange	Carbon Steel
Stems	Corrosion Resistant Steel
Diaphragm Valves	Austenitic Stainless Steel
Accumulator Check Valves	
Parts Contacting Borated Water	Austenitic Stainless Steel
Clapper Arm Shaft	Corrosion Resistant Steel
Relief Valves	
Stainless Steel Bodies	Stainless Steel
Carbon Steel Bodies	Carbon Steel
All Nozzles, Discs, Spindles, Guides	Austenitic Stainless Steel
Bonnets for Stainless Steel Valves without a Balancing Bellows	Stainless Steel
All Other Bonnets	Carbon Steel
Piping -	
All Piping in Contact with Borated Water	Austenitic Stainless Steel

TABLE 6.3.2-7 (Sheet 1)

SINGLE ACTIVE FAILURE ANALYSIS FOR EMERGENCY CORE COOLING SYSTEM COMPONENTS

Short-Term Phase

Component	Malfunction	Comments
A. Cold Leg Accumulator	Deliver to broken loop	Totally passive system with one accumulator per loop. Evaluation based on one spilling accumulator.
B. Pump		
1. Centrifugal Charging	Fails to start	Two provided. Evaluation based on operation of one.
2. Safety injection	Fails to start	Two provided. Evaluation based on operation of one.
3. Residual heat removal	Fails to start	Two provided. Evaluation based on operation of one.
C. Automatically Operated Valves		
1. Injection tank inlet	Fails to open	Two parallel lines; one valve in either line required to open.
Injection tank outlet	Fails to open	Two parallel lines; one valve in either line required to open.
2. Residual heat removal pumps suction line to RWST	Fails to close	Check valve in series with operation of only one valve required to stop flow from Sump to RWST. This failure results in additional loss of RWST volume (to the Sump) below the low RWST level automatic switchover of RHR from injection to recirculation mode.
3. Centrifugal Charging Pumps		
a. Suction line to RWST	Fails to open	Two parallel lines; one valve in either line required to open.
b. Discharge line to the regenerative HTX	Fails to close	Two valves in series; only one valve required to close.
c. Recirculation line	Fails to close	Two valves in series; only one valve required to close.
d. Suction from VCT	Fails to close	Two valves in series; only one valve required to close.

TABLE 6.3.2-7 (Sheet 2)

SINGLE ACTIVE FAILURE ANALYSIS FOR EMERGENCY CORE COOLING SYSTEM COMPONENTS
Long-Term Phase

Component	Malfunction	Comments
A. Valves operated from Control Room for Recirculation		
1. Containment sump recirculation isolation	Fails to open	Two lines parallel; only one valve in either line is required to open.
2. Residual heat removal pumps suction line to refueling water storage tank	Fails to close	Check valve in series with one gate valve; operation of only one valve required.
3. Safety injection pump suction line to refueling water storage tank	Fails to close	Check valve in series with gate valve; operation of only one valve required.
4. Centrifugal charging pump suction line to refueling water storage tank	Fails to close	Check valve in series with two parallel gate valves. Operation of either the check valve or one of the gate valves required.
5. High head pump suction line discharge of residual heat exchanger	Fails to open	Separate and independent high head injection path taking suction from discharge of residual heat exchanger

TABLE 6.3.2-7 (Sheet 3)

SINGLE ACTIVE FAILURE ANALYSIS FOR EMERGENCY CORE COOLING SYSTEM COMPONENTS
Long-Term Phase

B. Pumps

1.	Residual heat removal pump	Fails to start	Two provided. Evaluation based on operation of one.
2.	Charging pump	Fails to operate	Same as injection phase. *
3.	Safety injection pumps	Fails to operate	Same as injection phase. *

*either a charging pump or a safety injection pump required.

TABLE 6.3.2-8

EMERGENCY CORE COOLING SYSTEM RECIRCULATION PIPING PASSIVE FAILURE ANALYSIS

Long Term Phase

Flow Path	Indication of Loss of Flow Path	Alternate Flow Path
Low Head Recirculation		
From containment sump to low head injection header via the residual heat removal pumps and the residual heat exchangers	Accumulation of water in a residual heat removal pump compartment or the Auxiliary Building sump	Via the independent, identical low head flow path utilizing the second residual heat exchanger and residual heat removal pump
High Head Recirculation		
From containment sump to the high head injection header via residual heat removal pump, residual heat exchanger and the high head injection pumps	Accumulation of water in a residual heat removal pump and safety injection pump compartments or the Auxiliary Building sump or charging pump compartments	From containment sump to the high head injection headers via alternate residual heat removal pump, residual heat exchanger and the alternate high head charging or safety injection pump

TABLE 6.3.3-1

EMERGENCY CORE COOLING SYSTEM SHARED FUNCTIONS EVALUATION

Component	Normal Operating Arrangement	Accident Arrangement
Refueling Water Storage Tank	Lined up to suction of safety injection, containment spray and residual heat removal pumps.	Lined up to suction of centrifugal charging, safety injection and residual heat removal pumps.
Centrifugal Charging Pumps	Lined up for charging and seal injection service. Suction from volume control tank.	Lined up to CCPIT. Suction shifts to RWST. Valves for realignment meet single failure criteria.
Residual Heat Removal Pumps	Lined up to cold legs of reactor coolant piping.	Lined up to cold legs of reactor coolant piping.
Residual Heat Exchangers	Lined up for residual heat removal pump operation.	Lined up for residual heat removal pump operation.
Safety Injection Pumps	Lined up to cold legs of reactor coolant piping	Lined up to cold legs of reactor coolant piping.

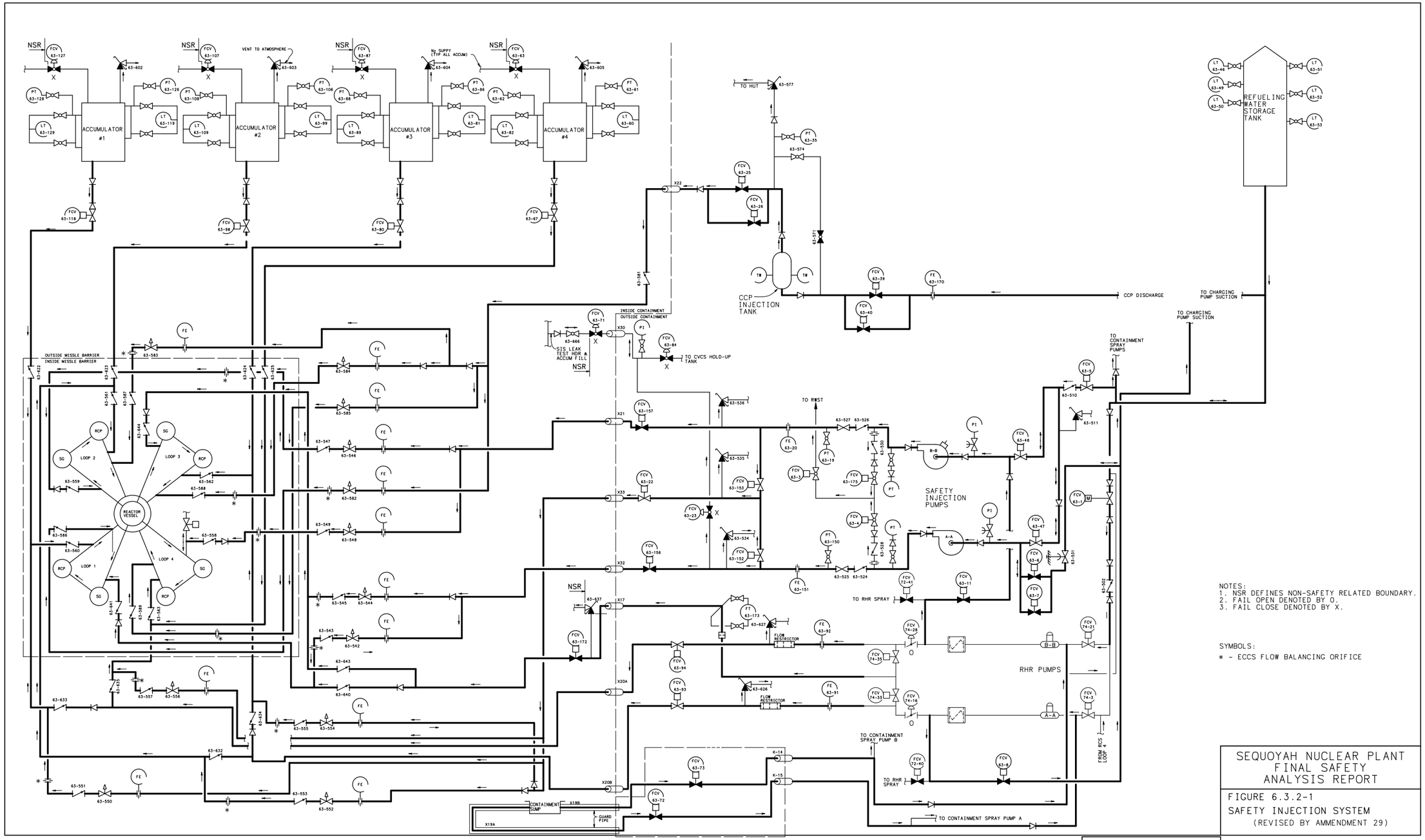

NOTES:
1. NSR DEFINES NON-SAFETY RELATED BOUNDARY.
2. FAIL OPEN DENOTED BY O.
3. FAIL CLOSE DENOTED BY X.

SYMBOLS:
* - ECCS FLOW BALANCING ORIFICE

SEQUOYAH NUCLEAR PLANT
FINAL SAFETY
ANALYSIS REPORT

FIGURE 6.3.2-1
SAFETY INJECTION SYSTEM
(REVISED BY AMMENDMENT 29)

CAD MAINTAINED DRAWING

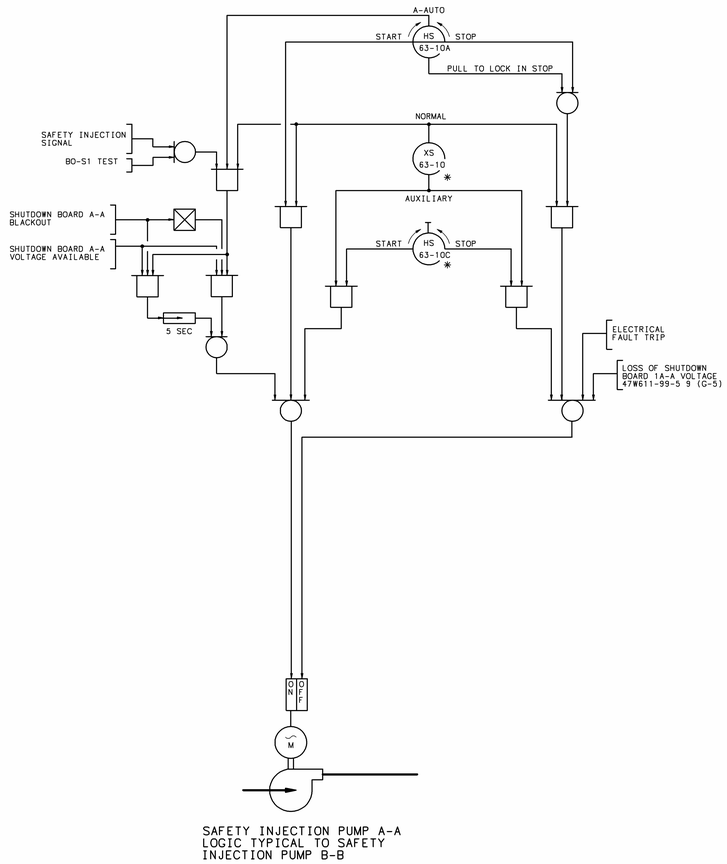

SEQUOYAH NUCLEAR PLANT
FINAL SAFETY
ANALYSIS REPORT

FIGURE 6.3.2-2
SAFETY INJECTION PUMP LOGIC

(REVISED BY AMENDMENT 22)

CAD MAINTAINED DRAWING

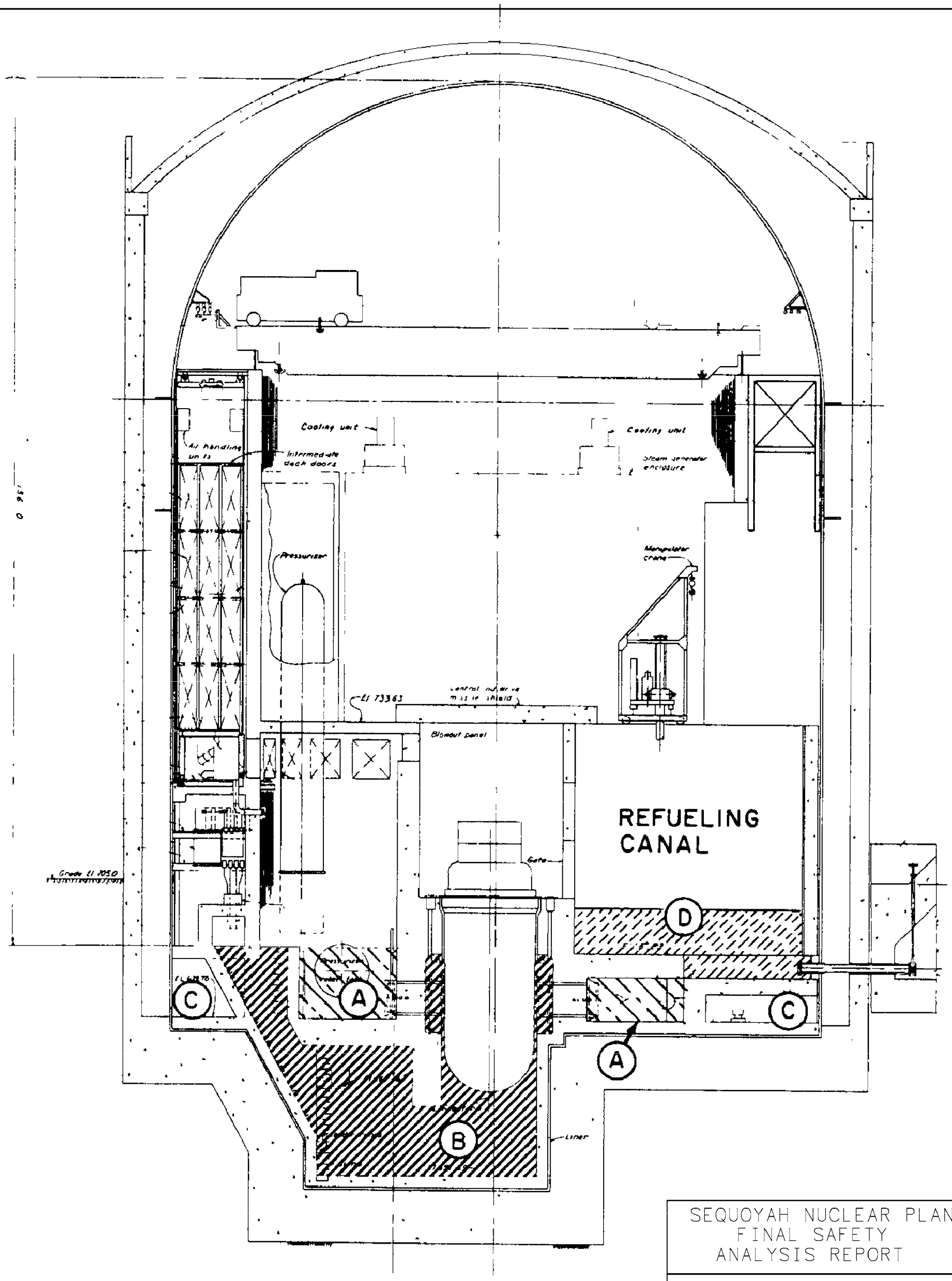

SEQUOYAH NUCLEAR PLANT
FINAL SAFETY
ANALYSIS REPORT

FIGURE 6.3.2-3 REACTOR BLDG ELEVATION ECCS ACTIVE SUMP AND INACTIVE SUMP LOCATIONS
(REVISED BY AMENDMENT 13)

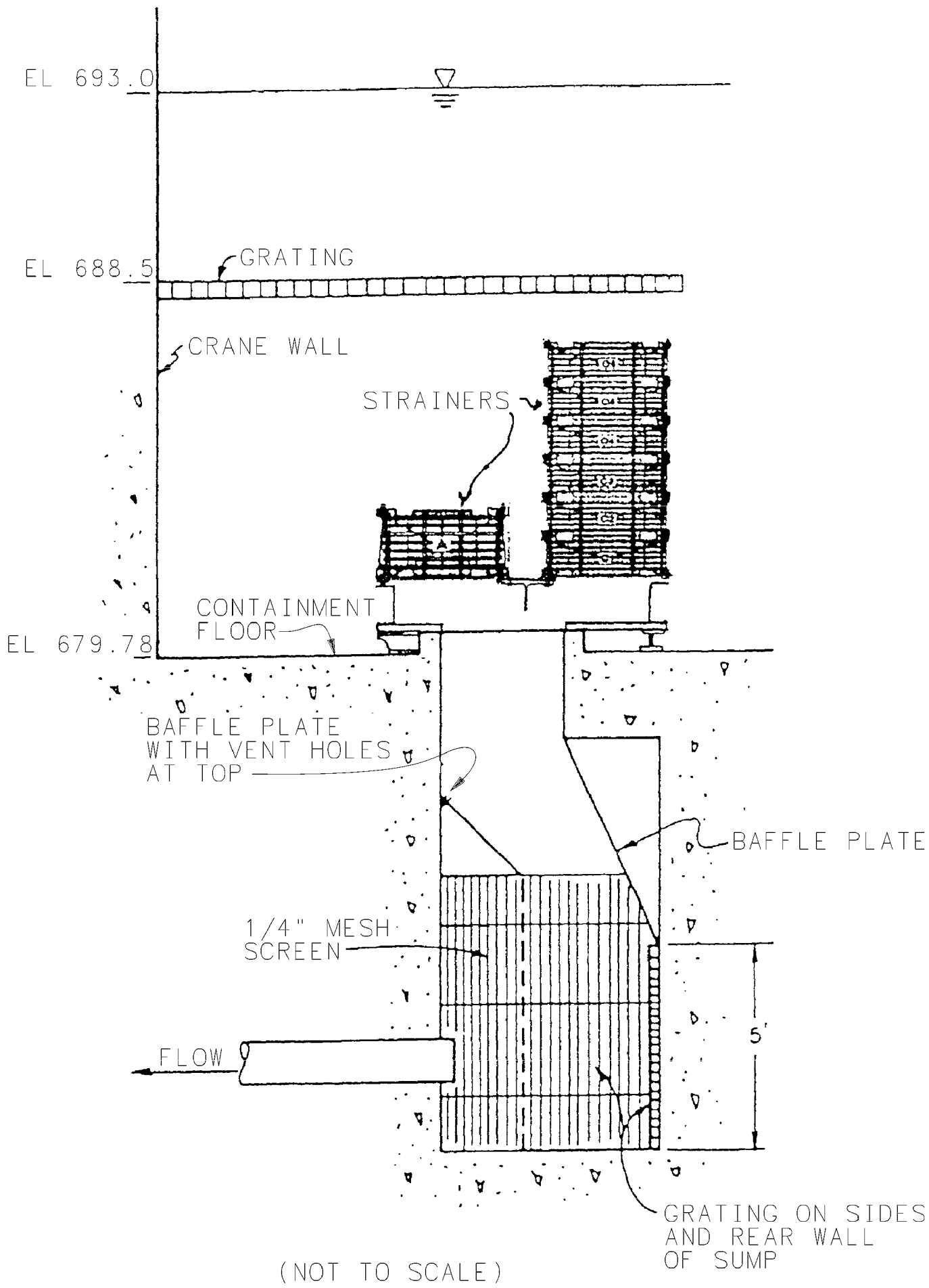

SEQUOYAH NUCLEAR PLANT
FINAL SAFETY
ANALYSIS REPORT

FIGURE 6.3.2-4
CONTAINMENT SUMP WITH
VORTEX MODIFICATIONS SUPPRESSION
(REVISED BY AMENDMENT 21)

CAD MAINTAINED DRAWING

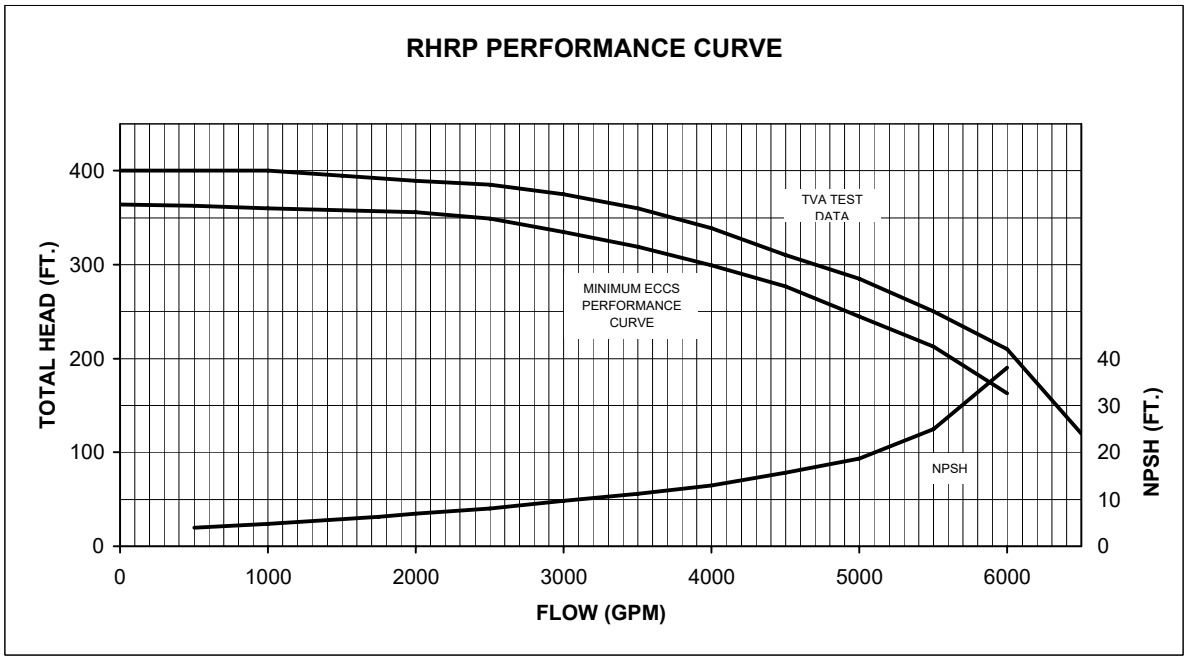

RHR MINIMUM PERFORMANCE POINTS

Flow (GPM)	Head (Ft)
0	364
500	363
1000	360
1500	358
2000	356
2500	349
3000	335
3500	319
4000	299
4500	277
5000	245
5500	213
6000	163

Notes

1. The NPSH curve plotted in the figure is a composite of the 1A-A, 1B-B, 2A-A and 2B-B pumps Pre-Operational Test Data (Reference 6.3.6.3).

2. The minimum pump performance curve represents the safety analysis limit. In-service test criteria may conservatively require increased developed head.

Revised by Amendment 21

Figure 6.3.2-5
NPSH and Head Capacity Curves for RHR Pumps

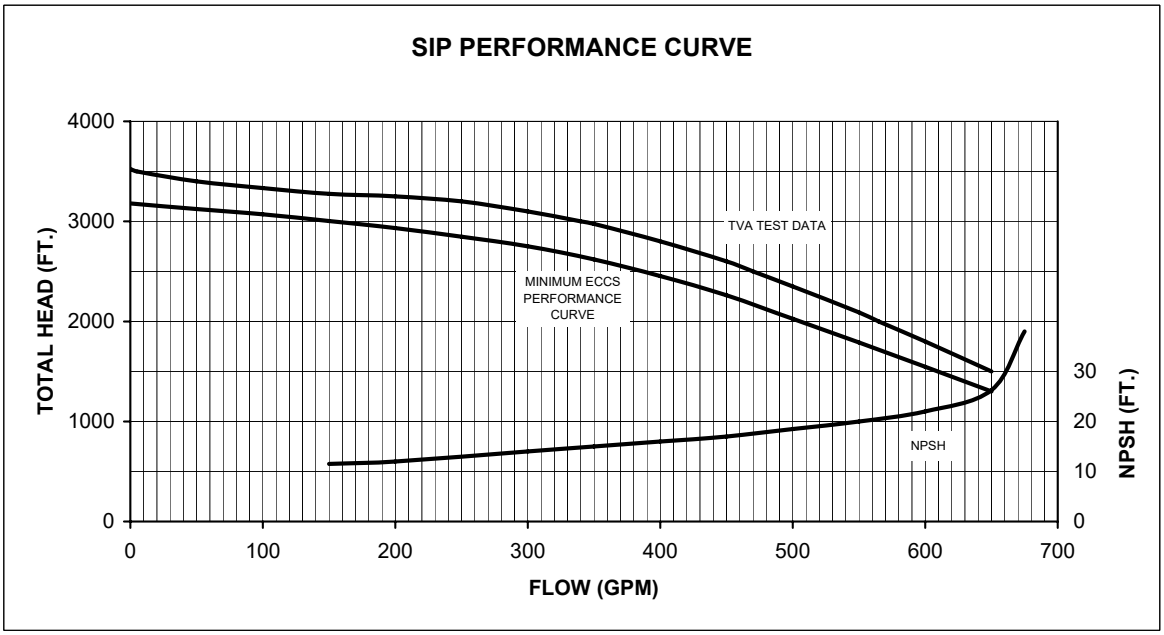

SIP MINIMUM PERFORMANCE POINTS

Flow (GPM)	Head (Ft)
0	3179
50	3123
100	3070
150	3004
200	2934
250	2847
300	2751
350	2620
400	2454
450	2262
500	2026
550	1790
600	1546
650	1300

Notes

1. The NPSH curve plotted in the figure is a composite of the 1A-A, 1B-B, 2A-A and 2B-B pumps Pre-Operational Test Data (Reference 6.3.6.3).

2. The minimum pump performance curve represents the safety analysis limit. In-service test criteria may conservatively require increased developed head.

Revised by Amendment 21

Figure 6.3.2-6
NPSH and Head Capacity Curves for Safety Injection Pumps

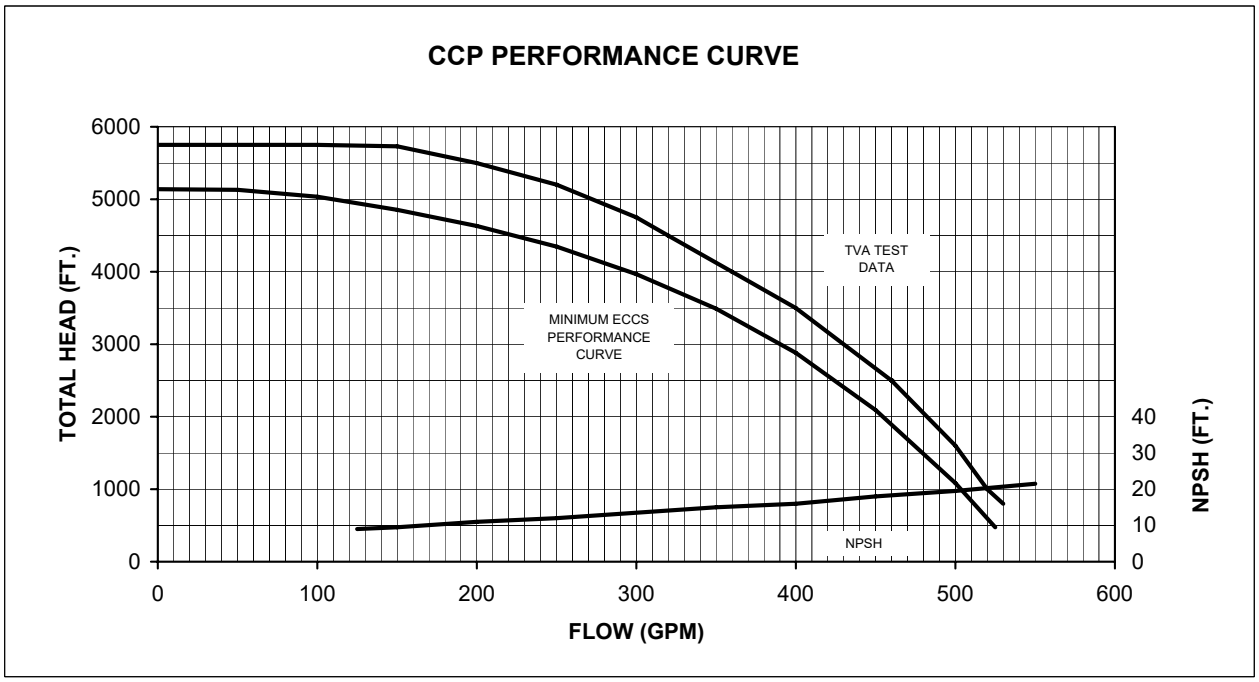

CCP MINIMUM PERFORMANCE POINTS

Flow (GPM)	Head (Ft)
0	5,140
50	5,130
100	5,035
150	4,855
200	4,631
250	4,346
300	3,966
350	3,491
400	2,880
450	2,090
500	1,083
525	475

Notes

1. The NPSH curve plotted in the figure is a composite of the 1A-A, 1B-B, 2A-A and 2B-B pumps Pre-Operational Test Data (Reference 6.3.6.3).

2. The minimum pump performance curve represents the safety analysis limit. In-service test requirments may conservatively require increased developed head.

Revised by Amendment 21

Figure 6.3.2-7
NPSH and Head Capacity Curves for Centrifugal Charging Pumps

6.4 HABITABILITY SYSTEMS

6.4.1 Habitability Systems Functional Design

6.4.1.1 Design Bases

One segment of the Main Control Room Habitability System design bases is a composite set of circumstances that describe the most adverse conditions that could take place. These were found to occur during a loss of coolant accident (LOCA) on a calm, hot day with the essential raw cooling water (ERCW) heat sink at its highest temperature. Such conditions were assumed to be concurrent, with the hot summer conditions lasting for the full duration of the emergency.

Another segment of the Main Control Room Habitability System design bases is a composite set of circumstances that describe the worst set of conditions envisioned during the winter months. These would occur during a LOCA on a calm, cold day with the ERCW heat sink at its lowest temperature. These conditions were also considered to be concurrent, with the weather conditions holding for the full duration of the emergency.

The last segment of the Main Control Room Habitability System design bases is a set of performance requirements. These are associated with the capability to maintain an environment within the main control room habitability system area that is in accordance with the requirements specified in Criterion 19 (10 CFR 50, Appendix A). The environment is maintained for the duration of the emergency even after suffering any single component or subsystem active failure.

Details associated with the above design bases are presented in other parts of this document. Information on wind conditions, sources, and amount of radioactivity that surround and enter the main control room is given in subsection 15.5.3. Peak outside environmental conditions and peak conditions within the main control room are described in subsection 3.11. A description of the cold weather limits adopted and information on normal operating conditions are described in subsection 9.4.1.

6.4.1.2 System Design

The Main Control Room Habitability System is designed to provide a safe, comfortable and appropriately equipped location for personnel controlling plant operations during normal operation and during accidents. Features incorporated into this Habitability System to assure these aspects include:

1. Adequate shielding from all potential radiation sources,

2. A Heating, Ventilating, Air Conditioning, and Air Cleanup (HVACAC) System designed to keep the main control room pressurized to at least a positive 1/8-inch w.g. relative to outside atmosphere and a slightly positive pressure relative to its surroundings and also, to maintain a slightly positive pressure in other rooms in the habitability zone relative to adjoining spaces during control room emergency operation mode at temperatures, humidities, and air purity levels adequate for conducting safe, efficient plant control operations (See section 9.4.1).

3. A low leakage enclosure for the main control room and its adjoining rooms to provide the capability for keeping a positive air pressure level within the enclosure,

4. Airborne hazards monitors that detect high temperature (e.g. steam) and unsafe radioactive gas levels annunciate the presence of the hazard and transfer the HVACAC system to its accident mode of operation. Operator action is credited for detection and actuation of the accident mode of operation for the HVACAC system for smoke,

5. Office and living accommodations appropriate for long term occupancy,

6. An amply stocked inventory of emergency equipment and supplies.

The Main Control Room Habitability System analyses is presented in Subsection 12.1.1. Factors considered in these design analyses were the LOCA induced activity releases and gamma shine from adjacent structures that could contain radioactivity are provided in Subsection 12.1.2.

This HVACAC System contains several aspects that are significant to the Main Control Room Habitability System. One of these is that this system has full capacity redundancy to assure a capability for controlling the environment after any single component or subsystem failure. Another important aspect is the capability to keep the main control room at least a 1/8-inch w.g. positive pressure relative to the outside atmosphere and a slightly positive pressure relative to its surroundings and also, to maintain a slightly positive pressure in other rooms in the habitability zone relative to adjoining spaces during control room isolation emergency operating mode, except during a tornado isolation mode. A third important aspect is the capability for selecting emergency pressurizing air, during accidents, from intakes on opposite ends of the building. This permits the operator to select the cleaner air source during such periods. A fourth aspect of interest to the Habitability System is the air cleanup units that purify both make-up and recirculated air flows during emergencies.

Each air cleanup unit in the HVACAC System contains a bank of HEPA filters and a bank of carbon adsorbers. The HEPA filter bank contains four filter units and the carbon adsorber bank contains twelve adsorber modules (see subsection 9.4.1 for further details). Type II unit trays, fabricated in accordance with AACC Standard CS-8, containing impregnated charcoal are used in the carbon adsorber bank. In this installation the face velocity across the bank of unit trays is less than 40 feet per minute and the residence time is in excess of 0.25 seconds to assure a high removal efficiency.

A third important feature in the Main Control Room Habitability System is its low leakage enclosure. This enclosure is formed by:

1. Monolithic reinforced concrete floor, walls, and roof described in subsection 3.8.4.4,

2. Metal pressure barrier beneath each control room console,

3. Low leakage seals for all electrical lines penetrating the enclosure,

4. Low leakage doors and door seals, and

5. Low leakage ventilation system isolation dampers.

The operational modes are the normal operations mode, and the emergency mode. The normal operations mode will be the mode utilized during all normal plant operations. The emergency operations mode will be initiated automatically by the receipt of a safety injection signal from either reactor unit, upon the detection of high temperature or radioactivity in the control building air intake duct, or manually by the operator (e.g., smoke).

In the normal operations mode, all access doors into the main control room habitability system area will be normally closed and will be used just for necessary ingress and egress.

In the emergency operations mode, ingress into and egress from the main control room habitability system area will be administratively restricted to essential movement. During this period, up to 1000 cfm of outside air will be brought in and mixed with recirculated air, filtered through an air cleanup unit, and processed for proper temperature level. In this mode, air leakage resistance from the main control room habitability system area will assure the maintenance of at least a 1/8-inch w.g. positive pressure in the main control room relative to outside atmosphere and a slightly positive pressure relative to its surroundings and also, maintenance of a slight positive pressure in other rooms in the main control room habitability system area relative to adjoining spaces. Such a capability was demonstrated during a preoperational test and periodically thereafter in accordance with Technical Specifications.

Little contamination is expected to enter the main control room habitability system area during ingress or egress activities during the emergency operating mode. The basis for this position is that during this brief period when the door is open the air flow will be from inside the main control room habitability system area to the outside. Since the pressure will never be below atmospheric in the main control room habitability system area during this interval, little contamination is expected to leak into the area. In such circumstances the makeup air input of up to 1000 cfm to the main control room habitability system area is considered sufficient to prevent significant infiltration.

Offices including the technical support center, living accommodations, and emergency equipment and supplies are also important features in the Main Control Room Habitability System. The scope of the office and living accommodations provided is shown in Figure 1.2.3-3. This shows that sanitary facilities provided include a toilet, shower, and locker room. Also provided is a kitchen that is equipped with a microwave, refrigerator, cabinet space, and a sink. Cabinets located within a main control room contain emergency supplies, first aid equipment, full coverage goggles, contamination clothing for whole body protection from beta radiation, face masks, self-contained breathing apparatus, and emergency radiation monitoring equipment to support possible emergency operations. The self-contained breathing apparatus is effective against smoke, airborne radioactive contamination, and an oxygen deficient atmosphere.

Fire protection for the main control room is described in the Fire Protection Report (see Section 7.4 and 9.5.1).

Face masks and self-contained breathing apparatus are provided to permit emergency operation.

Safe shutdown can be achieved and maintained from the backup control center (i.e., alternate shutdown) even with main control building completely destroyed. Alternate shutdown is described in the Fire Protection Report (see 9.5.1).

Environmental parameters for equipment in the Main Control Room are described in subsection 3.11. Details on the noncombustible control panels and consoles and on the fire resistant wiring installed in the Main Control Room are given in subsection 7.4.1.1.

The hazard to the control room from potential smoke generated by outside facilities is minimal due to the distance of separation between the sites and the control building air intake. The capabilities described above in Subsection 6.4.1.2, System Design, provide for the mitigation of consequences from smoke intrusion into the control room from any source. See subsection 2.2.3.5 for additional details on toxic gases.

6.4.1.3 Design Evaluation

The Main Control Room Habitability System has several features that collectively provide the capability needed to satisfy Criterion 19 (10 CFR 50, appendix A). An evaluation of this system, therefore, must take into consideration the contribution provided by the:

1. Shielding enclosing the main control room. Analyses presented in subsection 12.1.2 show that this shielding reduces the control room personnel dose from external sources created during a LOCA to a fraction of that permitted.

2. Low leakage enclosure for the main control room. The enclosure provides the capability for keeping a positive pressure within the main control room during control room isolation emergency operating mode.

3. Positive pressure level maintained in the main control room during control room isolation emergency operating modes. This capability assures that in-leakage of contaminated air is minimized.

4. Widely separated intakes for emergency pressurizing air. The two fresh air intakes for the control room are located at elevation 752, one at the north end of the building and the other near the south end. The intake at the north end may be used during both normal and emergency operations. During a radiological emergency, air is automatically supplied from both intakes until the operator manually shuts off the supply from one intake. Details concerning the radiation monitoring of the emergency pressurizing air and the selection of the air intake source are discussed in subsection 11.4.2.2.5. The option given the main control room operator to benefit from a wind-generated cleaner air mass may reduce contamination concentrations within the main control room significantly.

5. Sufficiently sized emergency pressuring air flow rate. The pressurizing air intake of up to 1000 cfm is sufficient for main control room pressurization and small enough to limit the amount of contamination drawn into the Main Control Room.

6. Filters and adsorbers incorporated into the HVACAC System. These air cleanup units help provide the capability for reducing the iodine inhalation dose to less than 30 rem and the whole body dose from gammas to well below the 5 rem limit. In these determinations, continuous 30 day occupancy was assumed and no credit was taken for utilizing the cleaner pressurizing air source capability described in item 4 above.

7. Airborne hazards monitor and control subsystem. Fully redundant monitors and controls allow automatic detection of high temperature (steam) and radiation levels and the capability to annunciate and to switch the HVACAC System to the accident mode of operation to help maintain an acceptable air purity level in the Main Control room. Operator action is credited for detection and actuation of the accident mode of operation due to smoke.

8. Accessibility of the HVACAC System dampers. This feature provides a capability for adjusting flow control or isolation dampers in the event one of these does not fail in the intended fail-safe position during an emergency.

9. Use of full coverage goggles and protection clothing provided in the control room emergency equipment stores kit to keep eye and whole body beta doses below the 5 rem whole body dose limit or its equivalent to any part of the body. Credit for occupancy was taken in this determination. Guidelines for occupancy were:

   100 percent occupancy during the first 24 hours, 60 percent occupancy beginning with the second day and ending after the fourth day, 40 percent occupancy beginning with the fifth day and ending after the thirtieth day.

   No credit, however, was taken for using cleaner pressurizing air available from one of the separated air intakes cited in item 4 above.

10. Office and living accommodations provided adjacent to the Main Control Room. These facilities provide a capability for long-term occupancy by control room personnel needed for accident control operations.

11. A backup control center located in the Auxiliary Building. This backup control center serviced by an Auxiliary Building Ventilation System gives a capability to conduct an emergency plant shutdown in the event that the Main Control Room becomes unavailable.

6.4.1.4 Testing and Inspection

Tests and inspections conducted on the Main Control Room Habitability System are mainly concerned with the HVACAC System, the capability to keep a positive pressure within the main control room, and the operation of the airborne hazards monitors. The scope includes preoperational and periodic tests. The preoperational tests objectives were to demonstrate that the HVACAC System, the main control room enclosure, and the airborne hazards monitors are capable of detecting hazards and are capable of establishing and maintaining acceptable conditions for safe, long-term occupancy. In this testing, the capability for performing all

necessary functions was verified. The periodic tests are scheduled to be performed during the plant lifetime in accordance with the Technical Specifications. Additional details are given in subsection 9.4.1.4.

6.4.1.5 Instrumentation Requirement

Several kinds of instrumentation are utilized in the Main Control Room Habitability System. Beta radiation sensors are installed in the makeup air intake duct. Static differential pressure indicators are installed in the Elevation 732 Mechanical Equipment room that indicate the pressure differential between the Main Control Room and the atmosphere external to the Control Building. Thermostats are positioned in the Main Control Room to control HVACAC System operations. Static pressure differential sensors are installed in the air cleanup units to measure the pressure change across each air purification element bank. Flow sensors are installed downstream from each Main Control Room air handling unit to sense the presence of substandard air flows and initiate startup of the standby redundant HVACAC train.

Design details of this instrumentation and associated control networks are given in Chapter 7.

6.5 ICE CONDENSER SYSTEM

See Figure 6.5.1-1 for Isometric of Ice Condenser.

6.5.1 Floor Structure and Cooling System

6.5.1.1 Design Bases

The ice condenser floor is a concrete structure containing embedded refrigeration system piping.

Figure 6.5.1-2A shows the general layout of the original floor structure. For Unit 1 only, Bays 13, 14, and 15, the wear slab is “modified.” The “modified” wear slab eliminated the ¼” steel plate and foam concrete section, as shown in Figure 6.5.1-2.B and replaced them with concrete. The “modified” wear slab is a monolithic reinforced concrete section with embedded cooling pipes. The “modified” wear slab is approximately 20 inches thick and acts as a filler/insulator material. The functional requirements for both normal and accident conditions can be separated into five groups: Wear slab, floor cooling, insulation section, subfloor and the floor drain. Each group is now described in detail.

Wear Slab and Floor Cooling System

Due to water intrusion and freezing under the slabs, the wear slabs in some bays have moved. This movement has impacted the slope of the wear slabs. The change in slope has not adversely affected the flow parameters. The embedded glycol piping and flex hose for the floor cooling system is acceptable for the movement in the wear slab.

Enhancement to the wear slabs to restrict the intrusion of moisture under the slabs include insulating between the 12" diameter drains and the 16" diameter sleeve, adding an insert with a gasket to seal the gap between the floor drain and the grate, and selectively applying sealant to the slab joints/cracks.

1. Functional Requirements

   The wear slab is a concrete structure whose function is to provide a cooled surface as well as to provide personnel access support for maintenance and/or inspection. The wear slab also serves to contain the floor cooling piping.

   The floor cooling system intercepts approximately 90% of the heat flowing toward the ice condenser compartments from the lower crane wall and equipment room during normal operation. The floor cooling system is designed with defrost capability. During periods of wall panel defrosting it may be necessary to heat the floor above 32°F. Selected bays have been modified to provide vertical drainage paths (well points) for removal of accumulated water from the foam concrete to reduce slab movement.

Design Criteria and Codes

Refer to the General Design Criteria, Subsection 3.8.3. The following codes are also used in the design:

American Welding Society Structural Welding Code - 1972, AWS Publication D1.1-72.

ANSI Standard Code for Pressure Piping Refrigeration Piping ANSI B31.5-66 including Addenda B31.5a 1968.

2. Design Conditions

a. Thermal Conditions

i. Initial cooldown -	top of Wear Slab	70°F	(except Unit 1 Bays 13, 14, & 15)
	bottom of Wear Slab	12°F	
ii. Defrost Cycle –	top of Wear Slab	33°F	
	bottom of Wear Slab	70°F	

b. Seismic Loading

i. 1/2 Safe Shutdown Earthquake (1/2 SSE) Loads	
Vertical 1/2 SSE	0.35g.
Horizontal 1/2 SSE	0.24g. radial; 0.36g. tangential
ii. Safe Shutdown Earthquake (SSE) Loads	
Vertical SSE	0.55g.
Horizontal SSE	0.37g. radial; 0.56g. tangential

c. Design Basis Accident (DBA) Loads

i. Pressure load on floor	19.3 psi
ii. Floor momentum load (due to deflectors)	78 kips

d. Ice Loading - assume 6 in solid ice on floor — 4300 lbs/bay

e. Live Loading — 250 lb/ft^2

f. Dead Loads

1/4" plate	1410 lbs/per bay (except Unit 1, Bays 13, 14, & 15)
1/2" pipe	164 lbs/per bay
Concrete Wear Slab	9700 lbs/per bay (except Unit 1, Bays 13, 14, & 15)
“Modified” Concrete Wear Slab	22575 lbs/per bay (Unit 1, Bays 13,14, & 15)

g. Wall Panel - 121 lbs/in over back 8 in. of slab

h.	Volume of cavity in floor structure	5.3 yds^3/bay
	"Foam" concrete density	35 lbs/ft^3 (except Unit 1, Bays 13, 14, & 15)

During seismic and/or accident conditions the insulation is designed to support loads transferred by the wear slab. See Section 6.5.1.3 titled, “Original Wear Slab Insulation Section,” for an evaluation of the effects of water intrusion and freezing within the foam concrete.

Structural Subfloor

The design of the structural subfloor is presented in Subsection 3.8.3.

Floor Drain

1. Functional Requirements

The floor drain is a passive structural component during normal operation as its only function is to minimize heat/air inflow to the lower plenum.

The section of floor drain pipe inserted vertically below the wear slab is designed to provide a high thermal resistance to minimize heat gain to the ice condenser. Under accident conditions the floor drains must not fail in a mode which prevents outflow of water.

Design Criteria and Codes

The floor drains and associated piping shall meet the requirements of TVA Class G piping, with the following provisions:

1. Seismic Category (pressure boundary)

2. Shall not crimp such that the cross-sectional area is reduced by more than 25 percent.

Welding of structural components shall comply with American Welding Society Structural Welding Code, AWS D1.1-1972.

Welding of piping components shall be in accordance with the requirements of ANSI B31.1 (1967).

The need for tack welds, originally specified between the sleeve and the floor drain grate, has been eliminated by incorporation of a flexible boot assembly into the floor drain to accommodate slab movement caused by intrusion of ice under the wear slab.

Design Conditions

Normal Operation
Design temperature, maximum - 120°F
Nominal DP across valve - less than 1 psf

Accident Conditions
ΔP across check valve - 14 psi (max.)
Temperature pipe and valve - 250°F

6.5.1.2 System Design

Original Wear Slab and Floor Cooling System

The original wear slab is a 4 inch thick layer of concrete (4000 psi) having an exposed top surface area of 139 sq-ft/bay. See Figure 6.5.1-3 for top surface typical geometry. The concrete has a density of 150 lbs/ft^3 and is prepared with air entrainment admixtures to minimize spalling from freeze/thaw cycles. Steel reinforcing is used in the wear slab to assure adequate and uniform strength. A protective coating is applied to the top of the wear slab which provides an additional water barrier for the wear slab. The floor cooling system consists of 1/2 inch schedule 80 carbon-steel ASTM A-333 Grade 6 piping which is embedded in the wear slab of each bay in a serpentine fashion (See Figure 6.5.1-3) thereby providing ample cooling of the wear slab surface. The cooling pipes contained in each wear slab rest on a steel plate which extends across the full width of the floor for maximum effectiveness in intercepting heat passing up through the floor. Expansion joints are located at each bay and expansion material is located at the slab perimeter. The floor cooling system design pressure is 150 psi. The floor coolant flow rate per bay is adjusted by means of needle valves and is monitored by a temperature sensing element located at the downstream end of each of the bay floor piping. Should a leak develop each individual bay piping loop can be isolated by closing two valves. The coolant contained in the piping is a corrosion inhibited glycol/water solution.

For defrosting purposes, electric heating of the glycol is provided. Components requiring periodic maintenance such as pumps, heaters and control valves are located outside of the ice condenser.

The insulation cavity is filled with a low density, closed cell, foam concrete. The nominal density of the foam concrete is 35 lbs/ft^3, the compressive strength is 110 psi. The thermal conductivity per inch thickness is normally 1.0 BTU/hr-°F-ft^2. The insulation cavity for the foam concrete is sealed by a vapor barrier to provide additional assurance that the insulation section will resist infusion of water vapor and thus retain a high thermal resistance. The top surface of the foam concrete is covered with a course of grouting which provides seating surface for the floor plate and cooling coil assemblies.

The foam concrete, however, has been exposed to water and over time became saturated which has resulted in degradation due to freeze-thaw action. The foam concrete is no longer considered capable of fully supporting the design loads experienced by the wear slab. This freeze-thaw action has also contributed toward upward heaving of the wear slab. The water source for the freeze-thaw action has been postulated to be leakage through the existing joint seals. During outage periods, water from ice condenser maintenance and cleaning has leaked through the joint seals and assimilated underneath the wear slab. The heaving action has resulted in the formation of cracks in the wear slab plus voids and fissures in the foam concrete.

Selected bays are “dewatered” by melting and removing ice from the foam concrete during outages as appropriate to reduce slab movement during plant operation. Foam concrete in selected bays has also been injected with a glycol based antifreeze agent to reduce freezing and thus further limit slab uplift caused by ice formation. A temporary floor movement monitoring system is installed to provide floor movement information during plant operation.

The inability of the foam concrete to function as a total support for the wear slab has been evaluated and found to be acceptable (see Reference 25). No adverse secondary effects were

identified that would prevent the ice condenser from performing its intended function. To help control the upward heaving of the wear slabs, well points may be installed in designated ice condenser bays. Following installation of the well points, the floor may be defrosted causing water in the foam concrete to migrate and collect in the wells where it can be removed. A sealant system has also been applied as necessary to seal the cracking formed by the heaving action. This sealant system is designed to retard the future intrusion of water.

Modified Wear Slab and Floor Cooling System

For Unit 1 only, Bays 13, 14, and 15, the "modified" wear slab is a 20.25 inch thick layer of concrete (4000 psi) having an exposed top surface area of approximately 139 sq-ft/bay. The concrete has a density of 118 lb/ft^3 and a nominal thermal conductivity of 6.0 BTU-in/hr-ft^2-°F. Steel reinforcement is used to control temperature and shrinkage stresses. The floor cooling system consists of ½ inch schedule 40 carbon steel ASTM A-333 Grade 6 piping which is embedded in the wear slab of each bay (13, 14, and 15) is a serpentine fashion thereby providing ample cooling of the "modified" wear slab surface. The cooling pipes contained in each wear slab rests on a steel framework, with cooling pipes extending across the full width of the floor for maximum effectiveness in intercepting heat passing up through the floor. Expansion joints are located between each bay and expansion material is located along the slab perimeter. The floor cooling system design pressure is 150 psi. The floor coolant flow rate per bay is adjusted by means of a needle valve and temperature is monitored by a temperature sensing element located on the downstream end of the coil piping for each bay. Should a leak develop, each individual bay piping loop can be isolated by closing two valves. The coolant contained in the piping is a corrosion inhibited ethylene glycol/water solution.

Floor Drain

Special consideration has been given in the design to prevent freezing of the floor drains and to minimize check valve leakage.

The floor drains employ a low thermal conductivity (transite) section of pipe 12 inch in diameter, inserted vertically in the wear slab to minimize heat gain to the ice bed. The top of the drain pipe is covered with a grating which is fastened to the floor. See Figure 6.5.1-2 for piping details. The drain check valve is a 12-inch diameter horizontal valve fabricated from 304 or 316 SS. The valve is designed to remain closed against the cold air head in the ice condenser to minimize any heat inleakage and air outleakage during normal operation. The valve is designed to tolerate a 15 psi back pressure when closed. The check valve is in a warm environment and no freezing will occur.

6.5.1.3 Design Evaluation

Wear Slab

The original wear slab is a structural element and during normal operating conditions is subject only to its dead weight consisting of concrete, steel reinforcing, steel plates, and piping. Below this is a foamed concrete fill for insulation purposes. These layers sit upon a structural slab and are both analyzed as sitting upon the structural slab. The original wear slab and fill dead weight is equivalent to 1.26 psi. Some bays have been modified. The "modified" condition has no independent wear slab. The volume where the original wear slab and fill was located is replaced by a concrete fill of light weight insulating concrete that contains the piping and is not considered a structural element. The modified configuration results in a light weight concrete fill dead weight equivalent to 1.41 psi. Six inches of 100% density ice is assumed to be uniformly distributed over the entire floor. The live load for maintenance purposes is assumed to be 250 lbs/ft^2. The vertical seismic input is 0.35 g for 1/2 SSE and 0.55 g for SSE. The dead load plus seismic loads are insignificant because the highest load on the floor is contributed by blowdown pressure during design accident conditions. The blowdown pressure is 9 psi, and added to this value, for design purposes, is a 40 percent design margin, and a dynamic load factor of 1.53. This results in a minimum value for design of 19.28 psi.

The most severe loading condition is the combination of the dead load, the SSE seismic acceleration of 0.55g, the 19.28 psi pressure load and 8.1 psi locally near the deflectors due to flow inpulse loadings. The wear slab is designed to accommodate the heatup and cooldown cycles and 1/2 SSE without overstressing the concrete and coolant piping (see section below titled, "Original Wear Slab Insulation Section," for discussion of the effects of ice in the foam concrete).

Floor Cooling System

The embedded piping for floor cooling of the wear slab is 1/2 inch schedule 80 pipe and ½ inch schedule 40 pipe is used for the "modified" wear slab. The floor cooling system design pressure is 150 psi and the piping is tested to 200 psi. The pipe is sized to allow for at least 38 mils of corrosion. Nevertheless, the glycol coolant contains corrosion inhibitors and as a result pipe corrosion will be negligible. For the unmodified wear slab, the 1/4 inch floor plate is integrated with the concrete through 1/2 inch diameter anchors welded to the plate on 12 inch centers. These anchors prevent thermal loads from concentrating in the piping.

Original Wear Slab Insulation Section

The original insulation section supported wear slab loads. For a conservative analysis the wear slab dead weight + seismic + DBA loads were assumed to be transferred to the foam concrete section. The original compressive strength of the foam concrete was sufficient to accept these floor loads.

The insulation section consists of foam concrete. As the result of freeze-thaw action experienced, the foam concrete in Units 1 and 2 is no longer considered to support wear slab loads as originally designed. This condition has been evaluated and is acceptable (see reference 25).

Floor Drain

Drains are provided at the bottom of the ice condenser compartment to allow the melt/condensate water to flow out of the compartment during a loss-of-coolant accident. These drains are provided with check valves that are designed to seal the ice condenser during normal plant operation to prevent loss of cold air from the ice condenser. These check valves remain closed against the cold air head (1 psf) of the ice condenser and open before the water head reaches a value of 18 inches of water. The check valves also disburse the drain flow to obtain the spray pattern used to establish the ice condenser drain lower compartment heat removal mechanism described in References 27 and 28.

For a small pipe break, the water inventory in the ice condenser produced in proportion to the energy added from the accident. The water collecting on the floor of the condenser compartment then flows out through the drains. For intermediate and large pipe breaks the ice condenser doors are open and water drains through both the doors and the drains.

For a large pipe break, a short time of the order of seconds is required for the water to fall from the ice condenser to the floor of the compartment. Results of full scale section tests performed at Waltz Mill showed that, for the design blowdown accident, a major fraction of the water drained from the ice condenser and no increase in containment pressure was indicated even for the severe case with no drains.

A number of tests were performed with the reference flow proportional type door installed at the inlet to the ice condenser and a representative hinged door installed at the top of the condenser. Tests were conducted with and without the reference water drain area, equivalent to 15 ft^2 for the plant, at the bottom of the condenser compartment.

These tests were performed with the maximum reference blowdown rate, with an initial low blowdown rate followed by the reference rate, and with a low blowdown rate followed by the simulated core residual heat rate.

The results of all of these tests showed satisfactory condenser performance with the reference type doors, vent, and drain for a wide range of blowdown rates. Also, these tests demonstrate the insensitivity of the final peak pressure to the water drain area. In particular, the results of these full scale section tests indicated that, even for the reference blowdown rate, and with no drain area provided, the drain water did not exert a significant back pressure on the ice condenser lower doors. This showed that a major fraction of the water had drained from the ice condenser compartment by the end of the initial blowdown. The effect of this test result is that containment final peak pressure is not affected by drain performance.

Although drains are not necessary for the large break performance, 15 ft^2 of drain area was provided for small breaks.

For small breaks, water flows through the drains at the same rate that is produced in the ice condenser. Therefore, the water on the floor of the compartment reaches a steady height which is dependent only on the energy input rate.

To determine that the 15 ft^2 drain area met these requirements, the water height was calculated for various small break sizes up to a 30,000 gpm break. Above 30,000 gpm the ice condenser doors would be open to provide additional drainage. The maximum height of water required was calculated to be 2.2 ft above the drain check valve. Since this height resulted in a water level which was more than 1 ft below the bottom elevation of the inlet doors, it was concluded that water does not accumulate in the ice condenser for this condition and that a 15 ft^2 drain gives satisfactory performance.

During normal plant operation, the sole function of the valve is to remain in a closed position, minimizing air leakage across the seat. To avoid unnecessary unseating of the valve, a 1-1/2 inch drain line leading to a 2 inch drain header is connected to the 12 inch line immediately ahead of the valve. Any spillage or defrost water drains off without causing the valve to be opened.

Special consideration has been given in the design to prevent freezing of the check valves and to minimize check valve leakage.

To minimize the potential for valve freezing, a low conductivity (transite) section of pipe is inserted vertically below the seal slab, while the horizontal run of pipe (steel) is imbedded in a warm concrete wall before it reaches the valve. The valve itself is in the upper region of the lower compartment, where ambient temperature is above the freezing temperature.

The valve is held in a closed position by virtue of its design as an almost vertical flapper with a hinge at the top. The flap is held closed by gravity.

In order to reduce valve leakage to an acceptable value a sealant is applied to the seating surface after installation of the valves. Tests show that this reduces leakage to practically zero. Maximum allowable leakage rate would be approached as a limit only if all the sealant were to disappear completely from all the valves, which is unlikely. Sealant will be replaced as necessary. Water soluble paper is usually placed beneath the floor drain grating to serve as an additional vapor barrier against heat influx.

Conclusion

On the basis of the original analysis performed on the floor structure, it was concluded that the floor structure is adequate for all anticipated loading conditions. Water intrusion and subsequent uplift of the floor slab due to freezing have necessitated enhancement of the floor system. Joints in the slab have been sealed to prevent further water intrusion and the movement of the slab is now monitored to ensure that the free movement of the lower inlet door is not restricted. Three bays in Unit 1 have been replaced with new concrete.

On the basis of the latest structural analysis and engineering evaluation performed on the floor system (see Reference 25), it is concluded that the effect of freeze-thaw action on the foam concrete will not prevent the Ice Condenser from functioning as designed.

6.5.1.4 Testing and Inspection

Inservice inspection of the floor drain valves is described in SQN Technical Specification 3.6.15.

6.5.2 Wall Panels

6.5.2.1 Design Basis

Function

The wall panels are designed under normal operating conditions, to thermally insulate the ice bed from the heat conducted through the crane wall, the containment wall and the end walls. In addition, they are designed to provide a circulation path for cold air and a heat transfer surface next to the ice bed so that the ice is maintained at its design temperature range.

The supporting structure of the wall panel also provides for transfer of radial and tangential loads from the lattice frame columns to the crane wall anchor embedments.

Criteria and Codes

The structural parts of the wall panels are designed to meet the requirements given in Subsection 3.8.3.

Design Conditions

The service temperature range is 10 to 20°F. The Design Basis Accident temperature is 250°F.

The design loads are presented in Table 6.5.2-1. The loading combinations considered in the design are those given in Subsection 3.8.3. For the SSE plus DBA combination, ten (10) loading cases are considered.

6.5.2.2 System Design

The wall panel design incorporates provisions for installation on the crane wall, containment wall, and end walls of the ice bed annulus. Containment and end wall panels are similar except for the omission of the lattice frame column attachments. The design of a crane wall panel is shown in Figures 6.5.2-1 and 6.5.2-2.

The crane wall panel design incorporates transverse beam sections which are fabricated from a standard structural section and to which the lattice frame column mounting lugs are attached. These sections are attached to the rear mounting angle assemblies through two stainless steel side plates of bolted construction.

Wall panels are attached to the crane and end walls by studs welded to the anchor embedments and to the containment by studs welded to the shell. Details of the design of the crane wall anchor embedments are covered in Subsection 3.8.3. The crane wall panels extend from the bottom of the upper plenum to the lower support structure where they are supported on the inner circumferential beams of the horizontal platform. The containment wall panels extend from the bottom of the upper plenum to the top of the floor wear slab.

Cooling ducts are incorporated in the design to provide flow from the air handlers in the duct adjacent to the ice bed and return flow in the outer duct of the panel. This provides an even distribution of duct face temperature. Each bottom duct assembly provides a flow path between the inner and outer duct to allow return flow through the outer duct.

The ducts are fabricated as sandwich panels utilizing corrugated sheet sections enclosed in sheet metal enclosures. This type of sandwich construction provides resistance to differential pressure loads and results in minimal overall weight and flow restrictions.

The back cover sheet of the panel is mechanically fastened to prevent leakage, facilitate installation of insulation and to provide a vapor barrier. Attachment of lap strips between adjacent wall panels is made to the side plates of the panels. Joining of wall panel members is accomplished using fillet welds and mechanical fasteners on load carrying members. Lighter sections are joined by spot welding where structural rigidity and/or positive sealing are not required. Flow sections of wall panels are seal welded to prevent air leakage.

Materials of construction of the wall panels conform to requirements stated in Subsection 3.8.3.

Areas between air ducts and walls are insulated and areas between adjacent air ducts are insulated and covered with a lap strip to provide a seal between wall surface and ice bed. Elastomers and sealants will be insignificantly affected by exposure to a 5 r/hr gamma radiation field over a period of forty years.

The insulation between the containment wall and the air duct is polyurethane foam insulation. The auto ignition temperature of this material is about 1000°F. Ignition temperature is 400 to 500°F. Decomposition starts at 300°F. The major decomposition products are $C0_2$, CO, and NO_2.

6.5.2.3 Design Evaluation

The wall panels have been analyzed for seismic and Design Basis Accident loading conditions as well as service loads.

Analysis for DBA Pressure Load

The wall panels as shown in Figure 6.5.2-2, are bolted to transverse beam sections with a maximum span of about 24 inches. In the analysis, the wall panels were taken as a 24 in. x 36 in. sandwich plate simply supported on all four sides.

The stress analysis was based on the general theory for sandwich plates presented in References 7 through 9. Elastic constants were determined by the method given in Reference 10.

A local stress analysis was also performed assuming an elastic foundation and the stability of the leg of the corrugated core was investigated, Reference 11 (see Figure 6.5.2-3). The results of these analyses are summarized in Table 6.5.2-2.

It is noted that a DBA pressure of 18.7 psig was used in these analyses. The duct internal pressure was neglected in the analyses because it is negligible in relation to the 18.7 psig (internal design pressure 0.5 psig).

Analysis for Seismic and DBA Transverse Beam Loads

A transverse beam section was investigated for its ability to transmit the imposed Seismic and DBA loads from the lattice frame column attachment to the crane wall. A two dimensional beam analysis utilizing the "STASYS" program was employed. Various loading modes were used with values as shown in Table 6.5.2-1 B, C, D & E. Results are summarized in Tables 6.5.2-2 and 6.5.2-3.

Overall Conclusion

Based on the analyses described in the foregoing, it is concluded that the wall panel assembly meets the design requirements given in Subsection 3.8.3.

6.5.3 Lattice Frames and Support Columns

6.5.3.1 Design Basis

Function

The lattice frames and support columns assembly provide the following functions:

1. Positions the ice baskets in the ice bed and establishes the hydraulic diameter (free flow area between the ice baskets).

2. Provides lateral support for the ice baskets under normal, seismic and accident loads.

3. Allows passage of steam and air through the space around ice baskets.

4. Allows for basket installation and removal requirements.

Structural Requirements

Refer to Subsection 3.8.3.

Design Criteria

1. The lattice frames shall be designed to be compatible with the periodic weighing procedure for the ice baskets.

2. The structure shall be designed to position the ice columns in the required array to maintain the performance of the ice condenser. In particular, the flow area around each ice column shall be maintained within the limits established by the general design criteria.

3. The lattice frame shall allow loading of the ice baskets in position, and shall permit lifting of complete basket columns for removal in sections.

Materials Requirements

1. Refer to the listing of acceptable materials in Subsection 3.8.3.

General Thermal and Hydraulic Performance

1. The lattice frames shall space the ice basket columns so that the hydraulic diameter around each ice column is maintained for all modes of operation.

2. Differential thermal expansion between crane wall and lattice frame structure, together with other applicable loads, shall not stress the lattice frames or its associated supporting structure beyond the design limits, or adversely affect the spacing between lattice frames.

3. Forces across the lattice frames in the horizontal and vertical direction due to seismic and blowdown loads together with other applicable loads shall not overstress the lattice frame and supporting structure beyond the design limits.

Interface Requirements

1. Lattice frame to Ice basket Columns The lattice frame locates and aligns the ice basket array. Sufficient clearance shall be provided to assure ease of ice basket installation but shall limit radial basket motion to a nominal amount. The lattice frame structure must also be capable of withstanding design and operating seismic and accidental loading.

2. Lattice frame to Lattice Frame Column The lattice frame shall be attached to the lattice frame columns. The column bases shall be adjustable so that matching of columns to lower support structure can accommodate the range of manufacturing and installation tolerances.

3. Lattice Frame Columns to Crane Wall Air Duct Panels The lattice frame columns shall be bolted to the wall panel cradles. Lateral seismic loading from ice baskets and lattice frame shall be transmitted to the crane wall through the lattice frame columns and the wall panels. The studs at the crane wall shall be capable of meeting the structural design criteria.

4. Lattice Frame Columns to Lower Support Structure Lattice frame columns interface with the lower support structures. The columns shall be designed to allow for accumulation of dimensional tolerances at interfaces.

5. Lattice Frame Columns to Intermediate Deck The top end of the lattice frame columns at each bay shall support the intermediate deck and related supports.

6. Allowance shall be made for mounting the ice condenser temperature sensing system onto the lattice frames.

Design Load

The lattice frames and support columns are designed to withstand dead loads, live loads, seismic loads including impact and accident loads and remain within the allowable limits established in Subsection 3.8.3. Differential thermal expansion loads due to normal and accident conditions are also considered. Structural loads are not transmitted through the lattice frames and columns to the containment structure.

Figures 6.5.3-1 and 6.5.3-2 shows the lattice frame loading orientation and distribution.

The lattice frame and column design loads are listed below.

1. Dead Loads

Lattice Frame Weight, lbs each	1200
Column Weight Crane Side, lbs each (2-1/4 inch x 4 inch bar at 30.6 lbs/ft)	1500
Column Weight Containment Side, lbs each (3 inch x 5 inch x 1/2 inch x 48 ft @ 20.88 lbs/ft)	1000
Column Connector Bracket Weight, lbs/pair	50
Load on Columns from Intermediate Deck Doors, Framing and Grating, lbs per column	490

2. Seismic Loads

1/2 Safe Shutdown Earthquake (1/2 SSE)

Horizontal:
(See Table 6.5.3-1 for 1/2 SSE at 6 ft. increments in elevation from 15 to 57 ft. above floor. Table 6.5.3-2 presents local load on lattice frame due to single ice basket)

Vertical:
1/2 SSE to be applied to Dead Loads in Vertical Direction, g 0.35.

Safe Shutdown Earthquake (SSE)

Horizontal - Radial and Tangential:
(See Table 6.5.3-3 for all safe shutdown earthquake loads for each of the eight levels of lattice frames).

Vertical:
SSE to be applied to Dead Loads in Vertical Direction, g 0.55.

3. Design Basis Accident (DBA) Loads

Horizontal - Radial and Tangential
(See Table 6.5.3-3 for all lattice frame DBA loads for each of the eight levels of lattice frames).

Vertical - Lattice Frames:
A design margin of 40 percent and a dynamic load factor of 1.1 should be used with the values in Table 6.5.3-4.

Vertical DBA Loads from Intermediate Deck on Lattice Frame (DLF) Columns:

Col. Position	DBA+.4 Margin	1.2 DLF	Drag Load at Max. Hinge Load DBA+.4 Margin
1. Crane Wall-Primary	18,800 lbs	22,600 lbs	1135 lbs
2. Crane Wall-Intermediate	9,400	11,300	567
3. Crane Wall-Intermediate	9,400	11,300	567
4. Crane Wall-Primary	18,800	22,600	1135
5. Containment-Primary	20,500	24,600	1135
6. Containment-Intermediate	10,250	12,300	567
7. Containment-Intermediate	10,250	12,300	567
8. Containment-Primary	20,500	24,600	1135

Column loads are sequential and reflect adjacent bay loads. Primary columns are located at the bay ends and intermediates are between the primary.

4. Combined DBA & SSE Loads

Forces are transmitted to lattice frame and columns by the ice basket when blowdown and vertical SSE occur simultaneously. Blowdown forces the baskets laterally against the lattice frame structural members while vertical SSE transmits the friction load vertically to lattice frames and columns.

Table 6.5.3-3 lists the horizontal tangential and radial DBA and SSE force for each of the eight lattice frame levels. Using a friction coefficient of 0.50, the load for individual frames and columns are calculated. These friction forces are summarized in Table 6.5.3-5.

Specific Plant Parameters are as follows:

1. Minimum Service Temperature Inside Ice Condenser, °F	10
2. Maximum Service Temperature Outside Ice Condenser, °F	120
3. Operating Pressure, psig	0.3-0.5
4. Accident (DBA) Pressure (maximum), psig	9 + 4.0% = 12.6
5. Accident temperature, °F	250

6.5.3.2 System Design

The lattice frames are structural steel grid work structures located in the ice condenser annulus and fitted between the lattice frame support columns and clearing the wall panel air ducts.

The lattice frames are mounted radially across the ice condenser annulus for the full 300 degrees of annulus circumference at each of eight levels between the lower support structure and the intermediate deck. The first level is located 15 ft above the wear slab or ice condenser floor and the next seven levels are vertically spaced at 6 ft intervals. A total of 576 lattice frames are required for the ice condenser assembly. Three lattice frames are required per level in each of the 24 bays and this configuration is repeated for the eight levels.

The lattice frames are mounted to rectangular steel columns which are placed at the crane wall side and at the containment side of the condenser annulus. The column bases are attached to the lower support structures. Columns at the crane wall are attached along the length to the wall panel cradles and the lower support structure, while those at the containment side are free-standing i.e., the bases are fastened to the lower support structure but there are no connections with the wall panels or the containment vessel wall. This arrangement prevents transmission of loads from ice baskets, lattice frames and columns to the containment vessel. The vertical columns and crane wall support maintain the lattice frame geometry during normal and accident loading conditions.

The lattice frames are welded steel structures consisting of radial struts supported by welded cross bracing as shown in Figure 6.5.3-3. Basically the lattice frame is about 125 in. long, 48 in. at its widest point and 7-1/2 in. deep. The entire welded structure weighs about 1200 lbs. Individual free path penetrations are provided for each of twenty-seven ice baskets. The lattice frame struts that form the ice basket restraints are all double fillet welded to the stringers. This assures a consistent weld design and ensure the integrity of the entire structure in operation.

Flexible radial members on the lattice frame are located at the containment side to accommodate differential thermal expansion in the tangential direction, and to allow for minor column misalignment at installation. The flexible radial members are attached to the vertical support columns.

The lattice frame attachment at the crane wall consists of horizontal ear-like tabs that accommodates the bolting. One tab is slotted in the tangential direction to allow for differential thermal expansion between the concrete crane wall and the steel structures. Lattice frame tabs are fastened to brackets on the vertical support columns. The wall panel cradles are fastened to the crane wall studs and transmit the lattice frame and ice basket horizontal loads to the crane wall, while the vertical loads are transmitted to the lower support structure.

The cross bracings and radial struts are arranged so that the ice baskets are positioned in the free path penetrations. The free path diameter controls the radial clearance between ice baskets and the lattice frames. The penetrations are spaced to assure the proper hydraulic diameter around each ice basket and to allow free passage of air and steam through the surrounding passages. Small pads on the radial struts control the tangential ice basket clearance.

All of the welding and inspection will be done in accordance with the American Welding Standard Procedure, D1.1-72. The welds are inspected visually and then by magnetic particle examination. The magnetic particle examination is applied to selectively located welds throughout the structure.

6.5.3.3 Design Evaluation

The lattice frames were analyzed using The ICES-STRUDL II system of computer programs for frame analysis. STRUDL is a general program operating as a subsystem of the Integrated Civil

Engineering (ICES) program. The lattice frames were treated as three dimensional structures composed of joints, support joints, and structural members connecting the joints. Figure 6.5.3-4 illustrates the analytical model generated for the lattice frames. Each structural joint is assigned a circled number, and each structural member an uncircled number.

The lattice frame is treated as a cantilevered structure in the horizontal plane and restrained vertically at the four column connections in the vertical direction. The model in Figure 6.5.3-4 shows flexible connections at the crane wall and no connection at the containment wall. Variations in flexibility of the crane wall connections were considered in the analysis to simulate the behavior of the slotted tab connection and the connections to lattice frame columns and air duct wall panels.

The analysis of the loads for the individual maximums of D + 1/2 SSE, D + SSE and D + DBA was determined. A survey was also conducted for the loading combinations of D + SSE + DBA for each lattice frame level at reference seismic orientation, 45 degrees, and 90 degrees from reference (Refer to Figure 6.5.3-1) to determine the maximum loading condition on the lattice frame. The survey showed that the highest loads occur on the lattice frame at the 15 ft. level, and that the combination of D + SSE + DBA, horizontally and vertically produces the maximum stresses.

Maximum stresses are calculated at each structural member at the end of the fillet weld for all loading conditions. These maximum stresses are summarized in Table 6.5.3-6.

Fatigue stresses due to 1/2 SSE loading were calculated and are within the allowable limits defined in Subsection 3.8.3. Table 6.5.3-7 summarizes the fatigue analysis.

The vertical support columns and brackets which support the lattice frames have been structurally analyzed to determine structural integrity. The worst load combinations of D + 1/2 SSE, D + SSE, D + SSE + DBA were considered in the analysis. The resulting stress analysis indicates that the stresses in the supporting structure are within the allowable stress criteria limits defined in Subsection 3.8.3.

The vertical support members were also analyzed to determine buckling characteristics. Analysis using classical buckling methods indicates that this phenomena is not a concern.

6.5.3.4 Testing and Inspection

For inservice inspection, see Technical Specification 3.6.12.

6.5.4 Ice Baskets

6.5.4.1 Design Basis

Function

The function of the ice baskets is to contain borated ice in 12 inch diameter columns 48 feet high. The ice absorbs the thermal energy resulting from LOCA or steam line break in the containment structure. The baskets are arranged to promote heat transfer from the steam to ice

during and following these accidents. The function of the ice baskets is also to provide adequate structural support for the ice and maintain the geometry for heat transfer during or following the worst loading combinations.

Loading Modes

The following loading conditions are considered in the design of the ice baskets; dead weight, seismic loads, blowdown loads, and impact loads between the basket, ice and lattice frames. The baskets withstand these loads and remain within the allowable limits established in Subsection 3.8.3.

Design Consideration

1. The structural stability and deformation requirements are determined to ensure no loss of function under accident and safe shutdown earthquake loads.

2. The ice baskets are designed to facilitate maintenance and for a lifetime consistent with that of the plant.

3. The structure is designed to maintain the ice in the required array to maintain the integrity of performance of the ice condenser. In particular, the hydraulic diameter and heat transfer area are maintained within the limits established by test to be consistent with the containment design pressure.

4. Any section of the ice basket is capable of supporting the total weight of the ice above that section.

General Thermal and Hydraulic Performance Requirements

The ice baskets are fabricated from perforated sheet metal which has open area to provide sufficient ice heat transfer surface. The adequacy of the design and the performance were confirmed by test.

Interface Requirements

1. Lattice Frame The lattice frames at every 6 ft. act as horizontal restraints along the length. The design provides a nominal 1/4 in. radial clearance between the ice baskets and the lattice frames. Lattice frame and basket coupling elevations coincide to prevent damage to the basket during impact.

2. Lower Support Structure Ice basket bottoms are designed to be supported by and held down by attachments to the lower support structure. The basket supports are designed for structural adequacy under accident and safe shutdown earthquake loads and permit weighing of selected ice baskets.

3. Basket Alignment The ice condenser crane aligns with baskets to facilitate basket weighing and/or removal. The baskets are capable of accepting basket lifting and handling tools.

4. Basket Loading The ice baskets are capable of being loaded by a pneumatic ice distribution system. The baskets shall contain the minimum ice weight as specified in Technical Specifications.

5. External Basket Design The baskets are designed to minimize any external protrusions which would interfere with lifting, weighing removal and insertion.

6. Basket Coupling Baskets are capable of being coupled together in 48 ft. columns.

7. Basket Couplings and Stiffening Rings Couplings or rings are located at 6 ft. intervals along the basket and have internal flanges to support the ice from falling down to the bottom of the ice column during and after a DBA and/or SSE. The first 6 ft. interval from the top of each basket does not require a support.

Design and Test Loads

The minimum test and basic design loads are given in Table 6.5.4-1 and 6.5.4-2.

6.5.4.2 System Design

The ice condenser is an insulated cold storage room in which ice is maintained in an array of vertical cylindrical columns. The columns are formed by perforated metal baskets with the space between columns forming the flow channels for steam and air. The ice condenser is contained in the annulus formed by the containment vessel wall and the crane wall circumferentially over a 300° arc.

The ice columns are composed of four baskets approximately 12 feet long each, filled with flake ice. The baskets are formed from a 14 gauge (.075) perforated sheet metal, as shown in Figure 6.5.4-1. The perforations are a 1.0 in x 1.0 in holes, spaced on a 1.25 inch center. The radius at the junction of the perforation is 1/16 inch. The ice basket material is made from ASTM-A569 which is a commercial quality low carbon steel. The basket component parts are corrosion protected by a hot dip galvanized process. The perforated basket assembly has an open area of approximately 64 percent to provide the necessary surface area for heat transfer between the steam/air mixture and the ice to limit the containment pressure within design limits. The basket heat transfer performance was confirmed by the autoclave test.

Interconnection couplings and stiffening rings are located at the bottom and 6 ft. levels respectively of each basket section. The bottom coupling and stiffening ring are cylindrical in shape approximately 3 inches high with a rolled internal lip. The lip provides stiffening to the basket and a stop for the cruciforms at 6 ft. intervals. These cruciforms prevent the ice in the basket from displacing axially in the event of loss of ice caused by sublimation or partial melt down due to accident conditions. Testing performed by TVA and Westinghouse has confirmed that a cruciform insert is not required for the first 6 ft. interval from the top of each basket. (See Reference 26). These couplings are attached to the ice basket by locking sheet metal and screw and basket detents.

The baskets are assembled into the lattice frames to form a continuous column of ice 48 ft. high. The bottom wire mesh is designed to allow water to flow out of the basket and has attachments for mechanical connection to the lower support structure to prevent uplift of the baskets during SSE and DBA. The lattice frames provide only lateral ice basket support at intervals corresponding to the stiffened ice basket sections. The vertical loads of the ice and ice basket is

transmitted by the basket to the lower support structure. The attachment between the ice basket and the lower support structure is disengaged to permit weighing of the baskets. The columns of ice can be lifted and removed in sections, and provision is made for lifting and weighing the whole length of selected columns for surveillance purposes.

Fabrication

1. The sheet metal is purchased in the hot-rolled and pickled condition.

2. The perforator oils and perforates the material and ships to the basket fabricator.

3. The basket fabricator rolls the perforated metal into a cylindrical shape 12 inches in diameter by 143 inches long and material is degreased.

4. The sides of the rolled cylinder are continuously welded using the gas metal arc process.

5. Following the welding the cylinder is pickled, washed, fluxed, hot dip galvanized, and dipped in a sodium dichromate bath.

6. The couplings and stiffening ring blanks are cut from sheets or coils of hot rolled, pickled and oiled material. These are formed by a rolling process and are 3 inches high with a roll-formed internal lip and are of a diameter to fit inside the perforated basket.

7. The cruciforms are die-formed from steel strip.

8. Following the forming operations, the stiffeners and couplings with cruciforms in place are pickled, washed, fluxed, hot dip galvanized, and dipped in a sodium dichromate bath.

9. The column bottom is fabricated by a procedure similar to item (6) above. The proper appurtenances are welded in place and the piece is galvanized per item 8 above.

10. The remaining appurtenances are cut to size, machined, welded, and plated where required.

11. The completed couplings, bottoms, appurtenances, stiffening rings and cylinders are next assembled. The stiffening rings are inserted inside the cylinder until the side is adjacent to the 2.5 inch unperforated area in the center of the cylinder and attached by a self drilling, self tapping, locking machine metal screw and four basket detents.

12. For the column bottom, two U-bolts and nuts and washers fasten the mounting bracket assembly to the plate of the basket end.

13. The bottom is inserted into the cylinder until the cylinder rests against the step of the bottom and is attached mechanically by twelve self drilling, self tapping locking machine screws.

14. For the upper baskets, the couplings are inserted in the cylinders approximately 1-1/2 inches and attached with twelve screws as above.

15. All welding and inspection are performed in accordance with AWS publication D.1.1-72, including latest revisions.

Installation

The completed baskets are placed in the lattice frames from the top deck by first lowering a bottom basket into the lattice frames and locking in place, extending approximately 2 inches above the top lattice frame. The second upper basket is lifted with the crane and gripper fixture and placed on top of the bottom basket inserting the coupling into the top of the bottom basket and attaching with, self drilling, self tapping screws.

Next the locking or holding fixture is released and the two baskets lowered until the top is approximately 2 inches above the lattice frames as above. The third and fourth baskets are installed in the same manner as the second.

When the full column is assembled and ready to set on the lower support structure, the bolts and mounting bracket are loosened and the column lowered to facilitate alignment of the yoke with hole in the support structure. After alignment and insertion of the clevis pin, the four bolts are tightened. A hitch pin cotter is inserted to retain the clevis pin.

Materials

The listing of acceptable materials for the ice basket are presented in Subsection 3.8.3.

6.5.4.3 Design Evaluation

Basket Evaluation

The perforated metal baskets of A-569 low carbon of 14 gauge sheet and 1.0 in. by 1.0 in. holes on 1.25 in. centers have been evaluated by analyses and tests and found to be within the allowable limits defined in Subsection 3.8.3. Three different methods were used in determining the baskets adequacy. The first method employed classical strength of materials techniques, the second used limit analysis and the third confirmed the basket integrity by tests.

Stress Analysis

This method considers the ice basket as being composed of a number of line (vertical basket element) and stay (circumferential basket element) elements and the collapse of the ice basket may be precipitated by the local yielding and/or buckling of the individual line elements.

When the basket is loaded both axially and laterally as a beam, the line elements are subjected to an axial compression, a lateral shear and a bending load. This combined stress state can possibly lead to local yielding, plastic collapse, line element buckling and ultimately to structural failure. All these modes of possible failures were analyzed and the results were found to be well within the allowable criteria. Analysis indicates that the critical line element buckling load is about 303,000 lbs. The maximum vertical load, D + SSE is 2782 lbs. Therefore the possibility of elastic buckling is remote. For a case with only lateral load, the analysis indicates that a factor of safety of 3.15 exists between the allowable basket load and the maximum lateral load that exists. A summary of stresses are tabulated in Table 6.5.4-3. For the various design cases considered, it is seen that the design stress is always below the allowable stress.

The effect of unequal ice sublimation or non-uniform ice density causing torsional loads on the ice basket, has been investigated. From Table 6.5.4-3 the horizontal load of 1017 lbs. occurring under (D + SSE + DBA) conditions at the 12 ft. elevation is considered. This is equivalent to a shear stress at the neutral axis of the line element of 3403 psi. The effect of non-uniform ice distribution was represented by considering the ice mass center-of-gravity offset at an eccentricity of one inch, and neglecting the loss of ice weight, this gave an additional shear stress of 302 psi, for a total combined shear stress of 3705 psi. This is well below the allowable shear stress.

Analysis was also made of the same where the ice melts out so that it occupies only one half side of the basket. The eccentricity would be 3 inches but the ice mass would be halved giving a shear stress of 450 psi, for a combined maximum shear stress of 3850 psi, again well below the allowable.

Limit Analysis

Limit analysis was performed on the ice basket in order to determine by analysis the lower bound collapse load when the basket is simultaneously loaded in the axial and lateral directions. The following mode of failures were considered as follows:

1. Plastic collapse of the compression side
2. Plastic yield of the compression side
3. Shear yield of the neutral plane
4. Plastic yield of the neutral surface of line elements.

A summary of the combinations of concentric axial load and distributed load that will cause basket failure is presented in Figure 6.5.4-2. Also superimposed in this figure is the design and test load envelope. It can be seen that this envelope is well below the governing failure mechanism of plastic yielding of the neutral surface of the line elements.

Ice Basket Appurtenances Evaluation

The ice basket connections are analyzed to ensure structural integrity during all design load combinations of dead weight, 1/2 Safe Shutdown Earthquake, Safe Shutdown Earthquake and Design Bases Accident. The primary area of concern is the ice basket to lower support structure connection. This area is shown in Figure 6.5.4-1. The item, material and minimum yield stress are presented in Table 6.5.4-4. The allowable stress limits for D + 1/2 SSE, D + SSE or D + DBA, and D + SSE + DBA are tabulated in Tables 6.5.4-5, 6.5.4-6 and 6.5.4-7 respectively. The loads used in analysis of these parts envelope minimum design loads plus load factors necessary for the TVA analysis.

Clevis Pin

The clevis pin transmits the ice basket loads to the lower support structure through a 1x2 inch bar welded to the top of the structure. Sufficient clearance is provided both vertically and horizontally to provide a pinned connection, thereby eliminating the transfer of any moment to the structure resulting from basket deflection because of horizontal loads.

The stresses on the 1/2 inch diameter pin are tabulated in Table 6.5.4-8.

Column Bottom Mounting

The mounting bracket is attached to the basket bottom as shown in Figure 6.5.4-1. The design loads are transmitted through the mountings and clevis pin from the ice basket bottom.

The stresses in the mounting bracket assembly, plate, and U-bolt are tabulated in Tables 6.5.4-9, -10 and -11 respectively.

Column Bottom

The column bottom is shown in Figure 6.5.4-1. The loads that are transmitted through the clevis pin assembly are distributed to the ice basket through the rigid plate and the cylindrical ice basket end section. Wire mesh is used to contain the ice and to provide drainage for water. The stress summary for the ice basket end is shown in Table 6.5.4-12.

The intermediate ice baskets' couplings were also analyzed and the results of the analysis, given in Tables 6.5.4-13, -14, -15 and -16, indicate that the intermediate couplings are structurally adequate for maximum loading conditions defined in Subsection 3.8.3.

6.5.4.4 Testing and Inspection

Inservice inspection of the ice baskets is described in SQN Technical Specification 3.6.12.

6.5.4.5 Modifications

Modifications have been implemented on some damaged baskets which cause the basket/basket support configuration to differ slightly from the original configuration. The modifications ensure that the modified basket configuration meets or exceeds the equipment performance requirements of the original basket configuration evaluated in the previous paragraphs of FSAR Section 6.5.4.

6.5.5 Crane and Rail Assembly

6.5.5.1 Design Basis

Function

The crane and rail assembly is designed to carry components and tools into, out of, and within the ice condenser area during erection, maintenance, and inspection periods.

Criteria and Codes

The crane is designed in accordance with the requirements of the Electric Overhead Crane Institute Specification 61. It is designed so that under all loadings it will not be derailed.

The rail is designed according to the General Design Criteria of Subsection 3.8.3. These criteria provide assurance that the rail will maintain its structural integrity.

Design Conditions

The service temperature range is 15 to 100°F.

During plant erection, two cranes can be used in the ice condenser region, each carrying up to 6000 pounds. A separation of at least two bays is maintained between their centers. Prior to installation of air handling units, one crane is removed. The heaviest load actually expected after

this time is less than 2,500 pounds. The crane will remain normally parked (without load) outside the ice condenser while the reactor is at power. The crane and supporting structure are designed to withstand dynamic loading during operating modes specified above.

The design loads for the crane are presented in Table 6.5.5-1.

6.5.5.2 System Design

The bridge, boom and hoist of the crane are all motor operated. The bridge speeds are approximately 38 and 110 feet per minute. The boom member is capable of rotating 360° in either direction at a speed of approximately 2 revolutions per minute. The electric hoist is mounted on the boom member with 2 stainless steel cables reeved over 2 sheaves mounted on the boom and around 2 sheaves on the block assembly. The hoist provides approximately 71 feet of lift at speeds of 7 and 20 feet per minute. It is equipped with an upper and lower limit switch to insure that the cables will not completely unwind from the hoist drum.

The hoist will automatically switch to low speed approximately 2 feet below the highest point of travel.

The total crane weight is approximately 7200 pounds.

The predominant material of construction is A36 steel. The main structural members are painted to prevent corrosion.

The crane travels on two circular rails that run through the ice condenser area. The circular diameters of the rails are 95 and 109 feet. The top flange plate and rail section are continuously welded to the web plate under controlled conditions. The top flange and web plates are A36 steel and the lower rail section is special analysis steel with a hard non-peening rolling surface.

6.5.5.3 Design Evaluation

The crane rails and supporting structures were analyzed as a part of the top deck structure (see Subsection 6.5.11). It was found that all stresses were maintained within limits prescribed in Subsection 3.8.3 for all design conditions defined in 6.5.5.1.

6.5.6 Refrigeration System

6.5.6.1 Design Basis

Functional Requirements

The refrigeration system serves to cool down the ice condenser from ambient conditions of the reactor containment and to maintain the desired equilibrium temperature in the ice compartment. It also provides the coolant supply for the ice machines during ice loading. The refrigeration system additionally includes a defrost capability for critical surfaces within the ice compartment.

During a postulated loss of coolant accident the refrigeration system is not required to provide any heat removal function. However, the refrigeration system components which are physically located within the containment must be structurally secured (not become missiles) and the component materials must be compatible with the POST-LOCA environment.

Design Conditions

Operating Conditions

See individual component sections:

1. Floor cooling Subsection 6.5.1
2. Air handling unit Subsection 6.5.7
3. Isolation valves Subsection 6.5.7

Performance Requirements

1. The mandatory design parameters that relate to refrigeration performance are:

a.	Maximum initial total weight of ice in columns	3,162,289 lbs
b.	Minimum total weight of ice in columns	2,082,024 lbs
c.	Normal overall average operating temperature range of ice bed	10° - 20 °F

2. The design must also provide a sufficiently well insulated ice condenser annulus such that with a complete loss of all refrigeration capacity, sufficient time exists for an orderly reactor shutdown prior to ice melting. A design objective is that the insulation of the cavity is adequate to prevent ice melting for at least 7 days in the unlikely event of a complete loss of refrigeration capability.

3. The non-directly safety related design objective parameters are:

   a. Ice sublimation: Ice sublimation and mass transfer shall be reduced to the lowest possible limits by maintaining essentially isothermal conditions within the ice bed and by minimizing local temperature gradients. A design objective is to limit the sublimation of the ice bed to less than 2 percent per year by weight. The normal steady state sublimation appearing on the wall panels as frost is calculated to be significantly less than the total design objective.

   b. An appropriate combination of refrigeration capacity and insulation capability shall be achieved to permit the following;

      i. Maintain the average ice bed temperature in the range of 10 to 20°F under the most adverse non-accident conditions.

      ii. Cool the ice condenser down to 15°F in 14 days (initial cooldown prior to ice loading).

The ice condenser is structurally designed to withstand the various extreme loading parameters including DBA + SSE. The ice condenser design and the reactor containment supporting walls were analyzed for heat transfer through the boundaries of the ice condenser. The configuration and sizing of the cooling components were then determined to achieve the various design requirements.

One of the most important design criteria for the ice condenser is that the insulation shall maintain the ice condenser chamber below 30°F for a significant period of time given that a malfunction or failure of any refrigeration component has occurred. Most system anomalies can be remedied during this period. For any repair which would require more time, a scheduled reactor shutdown can be completed in a safe and orderly fashion. Eliminating the "emergency factor" from the operation of the refrigeration system places the performance of the refrigeration components in an operational category without mandatory safety related design requirements.

6.5.6.2 System Design

The refrigeration system serves as a central heat sink for sensible heat and heat of fusion picked up, respectively, in the ice condensers and in the ice machines. A circulating system of ethylene glycol solution carries the heat from the various heat transfer surfaces to the glycol chillers. Cooling of the ice condenser is achieved by a three stage system:

1st stage - refrigerant loop
2nd stage - glycol loop
3rd stage - air cooling loop

First stage - Refrigerant loop

Six original 25 ton* glycol chillers and four replacement 25 ton** glycol chillers are installed in the plant. Each glycol chiller is self contained and operates independently. The glycol chillers are common equipment shared by Units 1 & 2. Each chiller unit is a closed refrigeration system consisting of a compressor, a condenser, expansion valves, and evaporator. The original six 25 ton* units utilize analog controls; the replacement four 25 ton** units utilize digital controls. Ethylene glycol solution is cooled during its passage through the evaporator, and heat is removed from the chiller unit by cooling water flowing through the condenser. The condenser cooling water is provided from the raw cooling water system.

Refer to Table 6.5.6-1 for chilling machine parameters.

Second Stage - Glycol Loop

The second cycle, Figure 6.5.6-1, carries the heat removed from the ice condenser air handling units, the floor cooling system and the ice machines (when operating) to the refrigerant cycle evaporator/cooler units. The liquid circulating through this cycle is a corrosion inhibited 50% ethylene glycol solution. It is compatible with most common piping materials and standard gasket and packing materials. Piping and valve materials used in this loop are predominantly carbon steel with stainless or alloy trim. Diaphragm valves are provided with ethylene propylene diaphragms. Piping and equipment carrying chilled ethylene glycol solution are covered with low temperature thermal insulation.

Six glycol circulating pumps have been provided to convey cooled glycol from the ten refrigeration units to the air handling units (30 per containment) and to the ice compartment floor cooling system of each containment. The design includes provisions for interconnecting the chiller units and pumps, as follows: the A through H chillers can be aligned to either Unit's Ice Condenser or to the Ice Machines, the I and J chillers can be aligned to the Unit 2 Ice Condenser or to the Ice Machines, but not to the Unit 1 Ice Condenser. The heated glycol is then returned to the refrigeration units thereby completing the glycol loop. The heat is extracted from the air in its passage through the air handlers and from the floor cooling system. Two rows of air handlers located along inner and outer walls are served by respective glycol supply and return headers. The

*Nominal refrigeration rating of original chillers based on 85°F RCW Condenser inlet temperature
**Nominal refrigeration rating of replacement chillers based on 88°F RCW Condenser inlet temperature

return headers are connected to a vented expansion tank located above the upper deck in each unit. Inboard and outboard containment isolation valves are installed on both supply and return lines. Closure of these valves in response to a Phase A containment isolation will isolate the ethylene glycol piping inside the containment vessel from the external refrigeration system. In the event of a LOCA, the glycol heats up from approximately 0°F to the containment accident temperature and expands harmlessly into the expansion tank. The liquid trapped between a pair of isolation valves is relieved around the inner isolation valve through a bypass line via a small check valve. The bypass line also contains test connections for periodic leak testing of the isolation valves and the check valve.

The ice condenser floor is kept cold by chilled glycol solution circulating through pipe coils embedded in the concrete wear slab. (See Subsection 6.5.1 for floor cooling diagrams). During normal operation, one floor cooling pump feeds a circular header, which distributes the coolant to individual coils located in each bay. A second circular header returns the flow to pump suction.

The floor glycol solution is maintained at the proper temperature by continuously bleeding solution out of the system and feeding cold solution into it at the same rate. The cold solution may be taken from the glycol stream returning from the air handling units to the external refrigeration system. The bleed flow is sent back into the same line downstream of the feed connection. Feed and bleed flow is maintained by the same pump that drives solution through the coils. Bleed flow rate is regulated by a temperature control valve. A second pump is available for use while pump no. 1 is being serviced. A manual throttling valve bypassing the temperature control valve can perform the latters' function.

Floor temperature will generally be maintained between the temperatures of the ice bed and the wall panels. There should, therefore, be essentially no frosting on the floor surface. It is sometimes necessary, however, to heat the floor above 32°F when any time the wall panels are being defrosted in order to keep the water melting off the wall panels from freezing to the floor. At this time, the floor will be heated with warm glycol. After defrosting is completed, the system is restored to its normal cooling status. The defrost cycle is relatively brief and its effect on the ice bed will be negligible.

Components requiring periodic maintenance (pumps, heater, control valve) are located outside of the containment. The cooling coils in the concrete wear slab intercept heat passing up through the floor. The coils are made of heavy steel pipe to minimize chances of developing a leak by gradual corrosion of pipe material. Should a leak develop, any individual loop can be isolated by closing two valves inside the lower region of the ice condenser.

Table 6.5.6-1 has additional detailed parameters for the glycol cycle components.

The structural summary of the glycol cycle components are discussed in the following sections:

1. Floor Cooling System Subsection 6.5.1
2. Isolation Valves Subsection 6.5.7

<u>Third Stage - Air Cooling Loop</u>

The ice condenser compartment is designed to be kept below the freezing point throughout the life of the plant. It is cooled to 15°F prior to ice loading and kept near that temperature

indefinitely, barring occurrence of a loss-of-coolant accident, extensive failure of the refrigeration system, or permissible excursion during ice loading. Ice bed temperature is maintained at the specified level by means of chilled air circulating through the boundary planes of the compartment. Starting in the upper plenum, which constitutes the top boundary, air enters one of 30 air handling packages located in the plenum. The air handler cools the air and blows it down through a series of insulated duct panels lining the inner, outer and end walls of the ice condenser. When the air reaches the lower support structure at the inner wall or end walls or the floor level at the outer wall, it turns back up to the plenum through a parallel path in the wall panels.

The air handling units are designed for automatic self-defrost operation. The self defrost cycle is initiated by a preset timer. The timer programs defrost time and duration for each individual AHU coil. Both the time and duration of the defrost can be adjusted by resetting the timer. When the defrost time reaches the time setting for defrosting, the timer contact will close. This action will energize the coil defrost, drain pan, and condensate drain heaters; stop operation of the AHU fan motor; and shut off the solenoid operated glycol valve stopping glycol flow. The air handling unit will remain in defrost until the timer completes the defrost timing period. At that time, the above noted actions will be reversed, returning the AHU to normal operation. During the defrost period, the defrost termination (DT) switch may reach the 100°F cutout point before the time completes the defrost cycle. In this case, the DT switch will open and de-energize the heaters. However, the fan motor and glycol valve will not return to their normal operation modes until the timed defrost period ends. Optimum defrost cycles will be determined by experience gained during plant operation.

The coil defrost heaters, drain pan heater, and condensate drain heater have a high limit thermostat that will terminate the defrost heat if the defrost termination thermostat should fail.

Provisions also exist for defrosting the wall panels by circulating heated air through the wall panels. The structural function and capabilities of the air cooling cycle components are discussed in the following sections:

1. AHU Subsection 6.5.7
2. Wall panels Subsection 6.5.2
3. Air distribution ducts Paragraph 6.5.13

Table 6.5.6-1 has additional parameters for the air handling units.

6.5.6.3 Design Evaluation

The refrigeration system is sized to maintain the required ice inventory even under worst case operating conditions. The total capacity of the 10 glycol chillers is sufficient to maintain both ice condensers.

The design conditions for the hot boundaries of the ice condenser are:

1.	Lower containment, air temperature	125°F
2.	Upper containment, air temperature	105°F
3.	Equipment room air temperature	120°F
4.	Outer containment wall	110°F

Items 1 through 3 are specified in the general design criteria. Item 4 is the design dry-bulb temperature in the region of Tennessee where the Sequoyah Nuclear Plant units are located for a 50 year hot summer, plus an additional margin of 7°F. The 1% factor is defined such that only 1% of the time the dry-bulb temperature during the summer months will be above the specified temperature for a 50 year hot summer. Data was obtained from ASHRAE climatic guide for cooling and heating design conditions. For an average summer, the 1% design dry-bulb temperature for Chattanooga is 98°F and for a 50 year hot summer, is 103°F.

The major thermal boundaries of the ice condenser including the floor, cooled walls with ducts, lower inlet doors, and top deck support beams are analyzed using a Westinghouse developed computerized technique, TAP-A, (or TAP-B) - Computing Transient or Steady-State Temperature Distributions, WANL-TME-1872, Dec. 1969. Subcontract NP-1.

The TAP-A program is applicable to both "transient and steady-state heat transfer in multi-dimensional systems having arbitrary geometric configurations, boundary conditions, initial conditions, and physical properties. The program can be utilized to consider internal conduction and radiation, free and forced convection, radiation at external surfaces, specified time dependent surface temperatures, and specified time dependent surface heat fluxes."

The solution of the general heat conduction equation is determined with finite difference techniques. The program will solve the equation as determined for the particular finite element or nodal model set up, either explicitly or implicitly. All case studies for the ice condenser are solved implicitly.

The TAP-B program is a variation of TAP-A but includes fluid coupling to the finite element model. The TAP-B variation was used to analyze the cooled wall panels. Since the duct air temperature distribution is included in the model it is possible to evaluate the temperature distribution of the surface of the wall panel facing the ice condenser over the complete length of the duct.

The wall panel heat load comprises about 70% of the total heat load, through the thermal boundaries with the inner surface area of the wall panels covering just under 30,000 ft^2.

The wall panel model for the crane wall is 48 ft. long with 8 axial stations each 6 ft. in length. The width of the model covers the region from the center line of the duct region to the centerline of the lap strip region.

At each axial station there are typically three nodes distributed over the duct region, four nodes over the lap strip region and one node for the lattice frame support column. There are 41 interior surface nodes representing the two ducts at each axial station. The total number of internal material modes is 640 and the total number of surface nodes is 472 for the 48 ft. length of the model.

Roughly 70% of the thermal load through the wall panels flows through the mounting brackets (or about 50% of the total thermal load of the ice condenser). The cold boundary temperature of the model was assumed to be 12°F in the ice bed with a 10°F duct entrance temperature.

The original floor model utilized TAP-B. The results of the basic model justified the design concept. Hand calculations were used to estimate heat loads for design variations. The total

floor model is comprised of approximately 1200 nodes in 5 layers and covers one quarter of a typical floor bay, of which there are 24 bays. The air temperature over the floor was assumed to be 14°F. The temperature of the glycol boundary was calculated for each fluid node. Over 90% of the heat entering the floor region is found to be removed by the floor cooling system. Use is made of the transient capabilities of the program to determine the defrost or warm-up time required when the glycol is heated. The heat transfer through the top surface of the floor is in two directions, both into and out of the wear slab. The net flow from the top surface to the ice condenser chamber is about 1000 BTU/hr. About 78,000 BTU/hr total is absorbed by the floor glycol coolant.

The “modified” wear slab was analyzed using the ANSYS code to evaluate the heat transfer characteristics of the modified floor structure. The use of this evaluation resulted in a modified cooling coil design which would conservatively intercept the nominal heat load through the modified floor structure.

The lower inlet door region while not contributing significantly to the overall thermal load on the refrigeration system is extremely important when considering sublimation. Various models of portions of the door were postulated to determine effective means of limiting the heat flux through the lower inlet doors.

The total heat load through doors with appropriate insulation is maintained at less than 11,000 BTU/hr to the ice bed. The door assembly was analyzed in two segments, there are 24 complete 2 door assemblies in the ice condenser. The first door model covered the region from the centerline of one door panel to the central seal region. Hand calculations were used to determine the nature of the convection between the two door panels in the central seal region, and in the outer hinge region. The information on the type of convection present was necessary to locate insulation and to determine any advantage to be gained from positioning flaps or boots around the door center because the convection was determined to be laminar with air conduction dominating. The central door model contained about 150 internal nodes including insulation. The second region covered by a model was the hinge region. The hinge model was 15 inches deep (about 1/6 of) the door length and included effects of the reinforcement channels along the full width of the door. The extremities further away from the hinge region were only grossly modeled. There were a total of 168 internal nodes in the "hinge" model including a protective boot around the hinge. The hinge model also included effects of the pillar in the crane wall upon which the door is mounted. The hinge region is of major importance in contributing to the internal thermal load with most of the heat input coming from the massive concrete pillar. It is necessary to protect the hinges with boots to limit the convective heat transfer which is quite effective in reducing the heat flow.

The top deck support beams are similarly modeled using TAP-A. The beams are a major source of thermal load in the plenum and are thermal boundaries, but only a small fraction of the total thermal load on the air handlers (not including air handler motor heat).

The modeling required for analysis of the components is extensive and detailed. The admittance of each node and connection; involving the determination of the length, volume, and area of each element was conservatively estimated where simplification of the model was required. The models are realistic since sufficient detail was considered and all significant modes of heat transfer were considered. Hand calculations back-up all major assumptions used to arrive at a model.

The summation of the thermal analysis gives a total nominal thermal load of 60.6 tons or 727,600 BTU/hr, based on the original foam concrete floor structure design. The “modified” wear slab and embedded cooling coil was designed such that the nominal thermal load through the floor was similar to the original design. As such, the overall heat gain in the ice condenser is approximately the same.

The breakdown is listed below. The values given are considered to be maximum expected loads. Design changes required as a result of seismic load changes or other design re-evaluations would of course change the final summation. The final thermal load will still be maintained at the same level consistent with stated required refrigeration requirements.

	x 10^4 BTU/hr
Wall panels	29.33
Plenum and Top Deck	9.32
Leakage (50 cfm) (see Note 1)	1.31
Lower inlet doors	1.10
Floor (including floor pump heat)	12.00
End walls	.91
Total thermal load	53.97

Note 1. Plant testing has verified a nominal leakage of 250 cfm. Sufficient margin was provided in system design to ensure that minimum total ice weight not be reached between refueling outages, as demonstrated by past operating experience.

The calculated heat loads show that a heat gain of 465,300 BTU/hr per containment may be expected from thermal boundaries of the ice condenser. Additionally the air handling unit fan motors generate 75,800 BTU/hr of motor heat. The floor cooling system including pump heat has a heat gain of 120,000 BTU/hr.

The circulating pumps (2 operating) add a total of 100,200 BTU/hr. The piping is estimated to pickup 7,000 BTU/hr. Therefore, a chiller capacity of 790,000 BTU/hr per containment (base load) is required. The glycol chillers are common equipment serving both Units and the total chiller package capacity was chosen to be 3.8 times the total two unit base load which is approximately 3,000,000 BTU/hr. Since eight glycol chillers are rated nominally at 300,000 BTU/hr* and two glycol chillers are rated at 300,000 BTU/hr**, depending on cooling water temperatures, the total installed capacity is, therefore, 3,000,000 BTU/hr (nominal rating).

The six circulating pumps (4 operating, 2 standby) are conservatively sized to deliver the required cooling to each plant. Two standby pumps are included in the design to assure adequate cooling solution flow even in the event of a pump failure. Similarly the air handling units are conservatively sized to handle the worst case cooling load. Thirty air handling units are installed based on a 10/7 ratio of (per the original system design basis) installed capacity to base load.

*Nominal refrigeration rating of original chillers based on 85°F RCW Condenser inlet temperature
**Nominal refrigeration rating of replacement chillers based on 88°F RCW Condenser inlet temperature

Therefore at least nine (9) air handling units are available to take care of unit failures or units temporarily out of service due to normal air handling unit defrosting.

It is significant that the ice bed is sufficiently subcooled and insulated so that even a complete breakdown of the refrigeration system or of all air handlers will not initiate the melting of any ice for a period of one week. Anomalous conditions in the ice condenser will be indicated by alarm annunciation from expansion tank level switches, the temperature monitoring system, or the door position monitoring system.

Consideration has been given to the effect on refrigeration performance of component failure. The basic consideration to keep in mind is that if the refrigeration system were to fail completely it would take a period of more than 1 week for the ice bed to reach an average temperature of 30°F under maximum environmental conditions.

It is obvious from the manner in which the number of air handlers were sized that there is adequate air handler capacity to compensate for multiple air handling unit failures. If one bay using the original foam concrete structure in the floor is not cooled because the glycol flow has to be isolated from that bay the heat nominal load from that bay is under 3,000 BTU/hr. The effective nominal sublimation rate for that bay would be approximately .25% per year per bay. It would be expected that one bay would not be permitted to go uncooled for more than 1 year. Once an operational sublimation rate is established it would not be unreasonable to assume that possibly 3 isolated - uncooled floor bays could be permitted to be uncooled for about 1 year. If the floor cooling system is shut off completely it should be put back in operation in 3 to 6 months. An annual sublimation rate of about 4 to 5% per year will result with no cooling in the floor.

For the “modified” wear slab bays, a loss of cooing would result in a slightly higher heat transfer through the monolithic concrete relative to the foam concrete. However, the slight increase in heat transfer considering an isolated cooling coil would not be expected to increase nominal sublimation rates previously determined.

6.5.7 Refrigeration System - Components

The following discusses Refrigeration System components which require structural integrity.

6.5.7.1 Design Basis

1. Air Handling Units (AHU)

   During normal operation the air handling units serve to cool the air and to circulate the cooled air through the ice condenser walls panels to keep the ice subcooled in the ice beds. Normal structural loads expected are dead weight seismic 1/2 SSE and thermal loads. During an accident the AHUs are designed to resist the normal structural loads plus SSE + DBA induced loads. Welding, welder qualification and weld procedures are in accordance with ANSI B31.5 Refrigeration Piping and the ASME Boiler and Pressure Vessel Code, Section IX "Welding Qualification."

2. Isolation Valves

   During normal operation the containment isolation valves are open, thereby permitting glycol coolant flow to the containment as well as coolant return from the containment to

the glycol chillers. During a LOCA, the automatic diaphragm valves are commanded to shut which terminates the glycol coolant flow and isolates the part of the system inside containment. The valves constitute part of reactor containment. The valve operation satisfies the requirements of 10 CFR 50 Appendix A, GDC 57 "Closed System Isolation." In addition a small check valve is included within containment which provides a passage for expanding liquid trapped between the automatic diaphragm valves thereby avoiding a destructive pressure buildup. At the same time the check valve prevents reverse flow (out of containment) and therefore also satisfies the requirements of GDC 57.

The valves are required to function under SSE and/or DBA conditions and must seal against the circulating pump head.

3. AHU Support Structure

Functional Requirements

The AHU support structure supports the Air Handling Unit package under various design conditions which are detailed below:

Design Criteria and Codes

Refer to the Design Criteria Subsection 3.8.3.

Design Conditions

Normal Operation

Deadweight loads due to AHU, structure, transformer	2500 lbs
Design temperature, min.	15°F

Accident conditions

Post-Accident Temperature (no uplift)	190°F

6.5.7.2 System Design

1. Air Handling Units

Each AHU is supported from its support structure, transmitting its major loads to top deck cross beams. See the AHU Support Structure Design Criteria for additional details.

The air is drawn by each AHU from the upper plenum, is cooled in the AHU and is discharged into the air distribution header. The design gross cooling capacity of each AHU package is 30,000 BTU/hr with the plenum air entering at 19°F maximum and cooled by the AHU to 10°F nominal. Each package has a nominal 2400 CFM air delivery capacity. The entering glycol mixture is at -5°F nominal temperature and the discharge glycol temperature is 0°F nominal. These glycol temperatures may vary as needed to maintain the desired ice condenser temperature. The optimum normal operating temperature of the ice condenser has been demonstrated to be 19°F in order to minimize concrete expansion, floor heaving, and frost buildup. Electrical power is provided for fan motor and defrost heaters as well as for temperature control circuits.

In order to support seismically induced loads the AHU and supports are designed to have a natural frequency in excess of 20 Hz. All materials used in the AHU's are compatible with both normal and post LOCA environments.

2. Isolation Valves

The valves are made of carbon steel to ASTM A216, Grade WCB, normalized with a diaphragm and soft disc or seat material of ethylene propylene rubber. The valve bodies can tolerate a maximum internal pressure of 200 psig. The diaphragm valves are subjected to a normal flow rate of 360 gpm and can operate over a temperature range of -10 to 190°F. Materials and paints are corrosion resistant and present no material compatibility problems during either normal or accident conditions. Provisions exist for periodic leak testing of the isolation valves in place. Electric power exists for valve operation and valve position instrumentation is employed. The valves and associated piping are supported so as to limit the stresses due to earthquake and thermal loads.

3. AHU Support Structure

The support structure supports the air handling unit vertically and tangentially from the cross beam of the top deck structure and is radially hinged from channels attached to the crane or containment wall. All parts are coated with a paint suitable for use inside containment. Figure 6.5.7-1 shows the design of the structure.

6.5.7.3 Design Evaluation

Configuration

The uniformity of temperature in the ice bed is important to reduce the amount of sublimation.

The flow pattern of the duct work is planned to minimize temperature variation on the inner "ice bed side" surface. The cold air exhausting from the air handler units enters the ducts which are divided into two sections. The inlet section covers the entire front surface of the duct except for the insulated lap strip region. The cold air flows down the length of the ice condenser wall to the door top, or floor, then returns flowing up the backside facing the hot boundary. The ducts are isolated with thin insulation. The regenerative effect is very small since the 2 film coefficients on either side of the insulation provide a resistance that in combination with the low transverse gradient result in a relatively nominal or small heat flow from the hotter to the colder inside duct. In fact this flow helps to slightly mitigate the vertical gradient. The change in the temperature on the ice bed side surface of the duct is less than 2°F over all. The insulation between the containment wall or crane wall and the duct provides the primary resistance to reduce the heat flow into the ice bed.

Detail analysis of the panel surface also shows a very small temperature difference between the lap strip region and the duct surface. This uniformity (less than 1°F ΔT) results from tying the lattice frame support columns into the upflow or return duct by means of a heavy bracket and support pad attached to the back of the duct, then to the wall, rather than directly to the hot wall.

The wall panels act also to effectively reduce the heat flow into the ice bed in the unlikely event of a complete refrigeration failure.

The air handlers exhaust the supply of cold air into a common manifold with takeoffs to each of the 150 wall panel assemblies. The exhaust from the ducts enters a common plenum above the ice bed where mixing and balancing of the flows occurs. The exhaust of each duct need not be controlled by dampers, etc., since the system is relatively well balanced and insensitive to 10% variations in flow. It is unlikely that adjacent air handler units will be other than temporarily out of service and since excess performance capability is installed together with an equalizing inlet manifold occasional defrost etc. will not cause a problem.

Temperature variations along the containment wall will not cause temperature variations along the ice bed side for the reason that there is very little regenerative effect between the downflow and return ducts.

The outer containment wall is sealed against vapor migration by the containment shell, the inner crane wall is sealed and painted, however, no credit is taken for the effectiveness of the paint in preventing vapor migration. A calculation was made to check the permeability of the crane wall to moisture. It was determined that if the gap between the crane wall panel and the crane wall communicated with the dry upper plenum that vapor would migrate to the cold plenum rather than to the relatively warm back of the wall panel. It is required however that an effective vapor barrier be provided for the duct insulation which is accomplished by the sealed metal back facing of the wall panel.

The expected operating temperature difference between the upper plenum and the top of the ice bed is small. The plenum is isolated from the ice bed by the intermediate deck doors. The gradient across the deck is on the order of 1°F. This gradient is one of the most difficult of all parameters to predict with accuracy coincident with size of the gradient. However, since the gradient is small the intermediate deck heat load will not be significant.

Vents in the intermediate and top deck are installed to provide replacement air which will compensate for leakage flow through the lower inlet doors. These vents complete the circuit of flow and ensure that the flow through the lower inlet doors is always from the ice bed to the lower containment without depleting the cold head in the lower ice bed. Diffusion against the design flow was checked and found to be small or negligible, especially with flapper valves in the vents. (See Section 6.5.6.3.)

Sizing Calculations

The pressure drop through the ducts and manifolds was estimated by using loss coefficients determined by using a standard Reference 12 as a guide. The pressure drop through the air handlers was determined by test. The overall system flow rate was established by superimposing the system flow versus ΔP curve over the fan flow versus ΔP curve.

With the flow rate established the capacity of the air handlers was determined. First the air handler capacity was theoretically determined for a set of design conditions approximating operating conditions. Next the air handler units were tested by the manufacturer to the set of specified design conditions. It was determined that the theoretical relationships adequately predicted air handler performance and these techniques were then used to adjust the test values

to those of actual operation. The gross operating capacity of one air handler is just under 30,000 BTU/hr by manufacturer's test and calculation. Gross operating capacity has been found to be lower than 30,000 BTU/hr, however, the ice bed temperature has been successfully maintained at or below the Technical Specification limit.

The air handling unit heat load is adjusted by a factor of 10/7 per the original design basis to insure adequate capacity under operating conditions for fouling, defrosting or isolated instances of one or several unit failures. Maintenance and inspection will greatly increase or insure reliable mechanical operation and cooling performance.

An estimate of the number of air handlers required was made to initiate the calculation, the flow pressure and rates drops were then calculated and the fan motor heat and heat transfer rates of the air handler unit predicted. The predicted performance was compared with the required capability and the calculation was reiterated varying the number of AH units until the predicted performance just exceeded the required capability.

The final number of required air handlers was determined to be 30.

The capacity of the chiller packages was determined by commercial design practices. The expected thermal load was summed for the air handler units, pumps, floor system etc. and multiplied by a factor of 3 to size the chiller units. The expected loads were used rather than the design loads utilizing the 10/7 factor since it is not necessary or desirable to double up on fouling or excess capacity factors. The six original glycol chillers are rated for a capacity of 300,000 BTU/hr* per unit, and the four replacement glycol chillers are rated for a capacity of 300,000 BTU/hr** per unit with specifications as follows:

	original	new	
glycol outlet:	- 5°F	- 5.2°F	(as confirmed by test)
glycol inlet:	+ 2.3°F	+ 2.3°F	(as confirmed by test)
cooling water temperature:	85°F	88°F	

It should be noted that the chiller outlet is specified as approximately -5°F (nominal) and that the air handler inlet is also specified as -5°F (nominal). A check calculation of the line heat gains for 200 ft of 2 inch std pipe indicates a ΔT rise of .02°F for a nominal insulation thickness of 3 inch of foam glass.

Sublimation Calculations

The heat gain contributing to sublimation was determined to be under 16,000 BTU/hr as a result of the calculations discussed in Subsection 6.5.6. An enthalpy flow balance was employed to determine the fraction of heat entering the ice bed which results in sublimation. The fraction is about 30% of the heat transferred by convection.

Since the door and lower ice condenser volume is the major source of heat contributing to sublimation a simplified but conservative model was established for that situation. The door surface temperature was conservatively calculated to be 20°F with the ice bed temperature at 13°F for the descending cold air. The heat load to the ice bed was calculated to be less than

*Nominal refrigeration rating of original chillers based on 85°F RCW Condenser inlet temperature
**Nominal refrigeration rating of replacement chillers based on 88°F RCW Condenser inlet temperature

10,000 BTU/hr from the door with the insulation in place. Radiation and convection were taken into consideration in the calculations, both with respect to the heat input and removal. A typical deposition of frost was assumed to be on the wall panels with a nominal conductivity of 0.07 BTU/hr-ft^2-°F.

The area of deposition of frost varies with the air flow but the quantity remains constant (with constant heat input). Several techniques were utilized to bracket the air flow and corresponding sublimation calculations completed for each case.

The overall sublimation rate was calculated to be 0.2 to 0.5% per year when radiation was included as a mode of heat transfer. Previous calculations considering only convection ranged from 1 to 2% per year. It is obvious that the inclusion of radiant heat transfer effects significantly reduces the overall sublimation rate.

The model for sublimation considered only the lower ice bed volume door; the effects of heat loads from other sources intermediate deck etc., are not as significant and therefore included only in the final calculation to determine the quantity of ice deposited on the walls. Also not included was ice removal due to leakage of dry air.

A modal frequency analysis was performed for the air handling unit housings and support structure. The results indicate that the design frequency is approximately 20 Hz, so that the fundamental mode is well out of the frequency range of peak amplification on the response spectra. In the process of designing the structure on the basis of stiffness, strength of members subjected to various combinations exceeds specified limits by generous margins.

6.5.8 Embedments

See Sections 3.7 and 3.8.

6.5.9 Lower Inlet Doors

6.5.9.1 Design Basis

Function

The ice condenser inlet doors form the barrier to air flow through the inlet ports of the ice condenser for normal plant operation. They also provide the continuation of thermal insulation around the lower section of the crane wall to minimize heat input that would promote sublimation and mass transfer of ice in the ice condenser compartment. In the event of a loss of coolant accident, LOCA, causing a pressure increase in the lower compartment, the doors open, venting air and steam relatively evenly into all sections of the ice condenser.

The door panels are provided with tension spring mechanisms that produce a small closing torque on the door panels as they open. The magnitude of the closing torque is equivalent to providing approximately a one pound per square foot pressure drop through the inlet ports with the door panels open to a position equivalent to the full port flow area. The zero load position of the spring mechanisms is set such that, with zero differential pressure across the door panels, the gasket holds the door slightly open. This setting provides assurance that all doors will be open slightly, upon removal of cold air head, therefore eliminating significant inlet maldistribution for very small incidents.

For larger incidents, the doors open fully and flow distribution is controlled by the flow area and pressure drops of inlet ports. The doors are provided with shock absorber assemblies to dissipate the large door kinetic energies generated during large break incidents.

Criteria

Radiation Exposure

Maximum radiation at inlet door is 5 r/hr gamma during normal operations. No secondary radiation due to neutron exposure.

Structural Requirements

Refer to Subsection 3.8.3.

Loading Modes

1. The door hinges and crane wall embedments must support the dead weight of the door assembly during all conditions of operation. Door hinges shall be designed and fabricated to preclude galling and self welding.

2. Seismic loads will tend to open the door.

3. During normal operations the outer surface of the door will operate at a temperature approaching that of the lower compartment while the inner surface will approach that of the ice bed. During loss of coolant accidents, the outer surface will be subjected to higher temperatures on a transient basis. Resultant thermal stresses are considered in the door design.

4. During large break accidents, the doors will be accelerated by pressure gradients then stopped by the shock absorber system. During small break accidents, doors will open in proportion to the applied pressure with restoring force provided by springs. Upon removal of pressure, door closure will result as a result of spring action.

Design Criteria - Accident Conditions

1. All doors shall open to allow venting of energy to the ice condenser for any leak rate which results in a divider deck differential pressure in excess of the ice condenser cold head.

   The force required to open the doors of the ice condenser shall be sufficiently low such that the energy from any leakage of steam through the divider barrier can be readily absorbed by the containment spray system without exceeding containment design pressure.

2. Doors and door ports shall limit maldistribution to 150 percent maximum, peak to average mass input for the accident transient, for any reactor coolant system release of sufficient magnitude to cause the doors to open.

3. The basic performance requirement for lower inlet doors for design basis accident conditions is to open rapidly and fully, to insure proper venting or released energy into the

ice condenser. The opening rate of the inlet doors is important to insure minimizing the pressure buildup in the lower compartment due to the rapid release of energy to that compartment. The rate of pressure rise and the magnitude of the peak pressure in any lower compartment region is related to the confinement of that compartment. The time period to reach peak lower compartment pressure due to the design basis accident is approximately 0.05 seconds.

4. Doors shall be of simple mechanical design to minimize the possibility of malfunction.

5. The inertia of the doors shall be low, consistent with producing a minimal effect on initial pressure.

Design Criteria - Normal Operation

1. The doors shall restrict the leakage of air into and out of the ice condenser to the minimum practicable limit. (See Section 6.5.6.3.)

2. The doors shall restrict local heat input in the ice condenser to the minimum practicable limit. Heat leakage through the doors to the ice bed should be a total of 20,000 BTU/hr or less (for 24 pairs of doors).

3. The doors shall be instrumented to provide indication of their closed position. Testing of prototype doors has established that their normal position under zero differential pressure conditions is 3/8" ± 1/8" open.

4. Provision shall be made for adequate means of inspecting the doors during reactor shutdown.

5. The doors shall be designed to withstand earthquake loadings without damage so as not to affect subsequent ice condenser operation for normal and accident conditions. These loads are derived from the seismic analysis of the containment.

6. The door system shall provide a flow proportioning capability for small break conditions in accordance with Figure 6.5.9-1.

Interface Requirements

1. Crane wall attachment of the door frames is via studs with a compressible seal. Attachment to the crane wall is critical for the safety function of the doors.

2. Sufficient clearance is required for doors to open into the ice condenser. Items to be considered in this interface are floor clearance, lower support structure clearance and floor drain operation.

   Original ice basket qualification testing (Topical Report WCAP-8110, Supplement 9-A Reference 21), has shown freshly loaded ice is considered fused after 5 weeks. In the event of an earthquake (OBE or greater) which occurs within 5 weeks following the completion of ice basket replenishment, plant procedures require a visual inspection of applicable areas of the ice condenser within 24 hours to confirm that opening of the ice condenser lower inlet doors is not impeded by any ice fallout resulting from the seismic disturbance. The 24 hour time frame for inspection is applicable during modes where the lower inlet doors are required to be operable, otherwise perform this inspection prior to startup. This alternative method of compliance with the requirements of GDC 2 is credible based upon the reasonable assurance that the ice condenser doors will open following a seismic event during the 5 week period and the low probability of a seismic event occurring coincident with or subsequently followed by a Design Basis Accident.

3. Door opening and stopping forces will be transmitted to the crane wall and lower support structure, respectively.

Design Loads

Pressure loading during LOCA was provided by the Transient Mass Distribution (TMD) code from an analysis of a double-ended hot leg break in the corner formed by the refueling canal, with 100 percent entrainment of water in the flow. For conservatism, TMD results were increased by 40 percent in performing the design analysis for the lower inlet doors.

The lower inlet door design parameters and loads are presented in Table 6.5.9-1.

6.5.9.2 System Design

Twenty-four pairs of inlet doors are located on the ice condenser side of ports in the crane wall at an elevation immediately above the ice condenser floor. General location and details of these doors are shown in Figures 6.5.9-2 through 6.5.9-6. Each door panel is 92.5 in. high, 42 in. wide and 7.5 in. thick. Each pair is hinged vertically on a common frame.

Each door consists of a 0.5 in. thick Fiber Reinforced Polyester (FRP) plate stiffened by six steel ribs, bolted to the plate. The FRP plate is designed to take vertical bending moments resulting from pressures generated from a LOCA and from subsequent stopping forces on the door. The ribs are designed to take horizontal bending moments and reactions, as well as tensile loads resulting from the door angular velocity, and transmit them to the crane wall via the hinges and door frame.

Seven inches of urethane foam are bonded to the back of the FRP plate to provide thermal insulation. The front and back surfaces of the door are protected with 26 gauge stainless steel covers which provide a complete vapor barrier around the insulation. The urethane foam and stainless steel covers do not carry overall door moments and shearing forces.

Three hinge assemblies are provided for each door panel; each assembly is connected to two of the door ribs. Loads from each of the two ribs are transmitted to a single 1.572 inch diameter hinge shaft through brass bushings.

These bushings have a spherical outer surface which prevents binding which might otherwise be caused by door rib and hinge bar flexure during accident loading conditions. The hinge shaft is supported by two self-aligning, spherical roller bearings in a cast steel housing. Vertical positioning of the door panel and shaft with respect to the bearing housing are provided by steel caps bolted to the ends of the shaft and brass spacer rings between the door ribs and bearings. Shims are provided between the shaft and caps to obtain final alignment. Each bearing housing is bolted to the door frame by four bolts, threaded into tapped holes in the housing. Again, shims are provided between the housings and door frame to maintain hinge alignment. Hinges are designed and fabricated to prevent galling and self welding.

The door frame is fabricated mainly from steel angle sections; 6 in. x 6 in. on the sides and 6 in. x 4 in. on the top and bottom. A 4 in. central I beam divides the frame into sections of each door. At each hinge bracket, extensions and gusset plates, fabricated from steel plate, are welded to the frame to carry loads to the crane wall.

The door panel is sealed to the frame by compliant bulb-type rubber seals which fit into channels welded to the door frame. During normal plant operations these seals are compressed by the cold air head of the ice bed acting on the door panels. As the seals operate at a much warmer temperature than the ice bed, frosting of the seal region is extremely unlikely. The inservice inspection program, described in Paragraph 6.5.9.4, will verify this fact on a periodic basis.

Each door is provided with four flow proportioning springs. One end of each spring is attached to the door panel and the other to a spring housing mounted on the door frame. These springs provide a door return torque proportional to the door opening angle and thus satisfy the requirement for flow proportioning. In addition, they assure that the doors will close in the event they are inadvertently opened during normal plant operations. The springs are adjusted during assembly such that, with no load on the doors, the doors are slightly open. For small door openings, the required 3/8 inch effective door opening is controlled by a 3/8 inch gap between panels and is, thus, independent of the door position as measured in degrees.

In order to dissipate the large kinetic energies resulting from pressures acting on the doors during a LOCA, each door is provided with a shock absorber assembly as shown in Figure 6.5.9-6. The shock absorbing element is a wedge shaped phenolic foam pad 89 in. high, 32 in. wide, and 28 in. thick at its maximum section. The pad is bonded to a base plate which is bolted to the ice condenser lower support structure. The pad is covered with a flexible, reinforced plastic sheet to prevent water ingress during operation and to retain foam particles following a LOCA. The plastic cover is in turn protected on the front, top, and bottom by a thin, stainless steel cover and on the remaining sides by a stainless steel mesh.

In operation, the door panel first contacts the shock absorber pad at an opening angle of 55° and crushes to approximately 30% of its original thickness. Stopping forces are distributed evenly over the outer two-thirds of the door panel, centered about the door center of percussion. The foam material is selected to provide an essentially constant crushing force over its crushing distance with minimum elastic recovery. Thus forces and bending moments on the door are minimized and, once opened, there is a negligible tendency for the door to "bounce" closed again.

Material

Door materials are consistent with the listing of acceptable materials as presented in Subsection 3.8.3. All exposed surfaces are made of stainless steel or coated with paint suitable for use inside the containment. All insulation material is compatible with containment chemistry requirements for normal and accident conditions.

6.5.9.3 Design Evaluation

The lower inlet doors were dynamically analyzed to determine the loads and structural integrity of the door for the design basis load conditions.

Using TMD results as input, the door dynamic analysis was performed using the "DOOR" Program. This computer program has been developed to predict door dynamic behavior under accident conditions. This program takes the door geometry and the pressures and calculates flow conditions in the door port. From the flow are derived the forces on the door due to static pressure, dynamic pressure and momentum. These forces, plus a door movement generated force, i.e., air friction, are used to find the moment on the door and from this are derived the hinge loads. Output from the program includes door opening angle, velocity and acceleration as functions of time as well as both radial and tangential hinge reactions.

Analysis Due to LOCA

The net load distributions on the door for both opening and stopping were determined by considering the applied pressures acting on the door and then solving the rigid body equations of motion such that the net forces and moments at the hinge point are zero. In the process, this produced expressions for the inertial forces in the door and the hinge reaction as functions of the applied pressure.

The expressions for net load distribution were integrated to determine door shear and moment as functions of distance from the hinge point. The resultant load, shear and moment distribution curves and the total hinge loads, calculated by the "DOOR" Program, provided the inputs for subsequent stress analysis.

Using this input, the door assembly was analyzed as a stiffened plate structure with vertical bending being taken by the FRP outer plate and horizontal bending plus radial tensile loads being resisted by the steel ribs. As inertial forces are directly accounted for in the analysis, no dynamic load factor was applied.

Hinge pin, hinge bracket, and frame stresses were analyzed under hinge reactions considering the effects of tension, shear bending, and torsion as appropriate. For these components, a dynamic load factor of 1.2 was calculated and applied.

Stresses in the flow proportioning springs were calculated considering dynamic effects as well as static ones. Welded and bolted connections were analyzed as part of the overall door, frame and hinge analysis.

All portions of the door and frame showed factors of safety greater than one. The general acceptance criterion was that stresses be within the allowable limits of the AISC-69 Structural Code. This provides an additional margin of conservatism over the general ice condenser design criteria for D+DBA which permit stresses up to 1.33 times the AISC limits. For materials and components not covered by the Code, i.e., bearings, non-metallic materials, etc., conservative acceptance criteria were established on the basis of manufacturer's recommendations and/or engineering evaluations.

Flow proportioning characteristics of the door were evaluated by determining the door opening as a function of applied pressure. Assuming a triangular pressure distribution across the door, the flow area vs pressure at full door opening, was determined to be consistent, within 10% of the curve shown on Figure 6.5.9-7. In addition the effects of door closure were evaluated assuming the pressure was suddenly released from a fully opened door and the door allowed to shut under the effect of the door proportioning springs. Stress levels in the door, gasket, and frame were found to be acceptable for this condition. In addition to the above analysis, full scale simulated blowdown tests have been performed on prototype door and shock absorber assemblies. These tests confirm the adequacy of these components at test levels up to 140% of maximum loading conditions predicted by the TMD Code.

Analysis of Seismic Loading

Seismic analysis of the doors indicates that stresses are insignificant in comparison with those occurring during a LOCA. Under a SSE, the doors could open several inches (actually, the crane

wall will move away from the doors). At the termination of the earthquake, the doors will immediately close and reseal under the effects of proportioning spring tension and the ice bed cold air head. Thus, any loss of cold air during a 1/2 SSE or SSE will be small and limited to a short period of time.

6.5.9.4 Testing and Inspection

Inservice inspection of the lower inlet doors is described in SQN Technical Specification 3.6.13.

6.5.10 Lower Support Structure

6.5.10.1 Design Basis

Function

The lower support structure is designed to support and hold down the ice baskets in the required array, to provide an adequate flow area into the ice bed for the air and steam mixture in the event of a Design Basis Accident, to direct and distribute the flow of air and steam through the ice bed, and to protect the containment structure opposite the ice condenser inlet doors from direct jet impingement forces.

The last two functions are accomplished by turning vanes that are designed to turn the flow of the air and steam mixture up through the ice bed in the event of a Design Basis Accident. For such an event, the vanes would serve to reduce the drag forces on the lower support structural members, reduce the impingement forces on the containment across from the lower inlet doors and to distribute the flow more uniformly over the ice bed. In addition to the turning vanes, the lower support structure has slotted plates, which are continuous around the outer circumference of the lower support structure and are designed to reduce the jet impingement forces on the containment structure across from the lower inlet doors in the event of a Design Basis Accident.

Criteria and Codes

The loading combinations, stress limits and material specifications used in the design of the lower support structure are given in Subsection 3.8.3.

Design Conditions

The normal operating temperature range is 10 to 20°F. The normal operational temperature change, including maintenance operations is 10°F to 70°F. The maximum temperature during a Design Basis Accident is 250°F.

The loads used for the design of the lower support structure are given in Table 6.5.10-1. The loads consist of dead weight (gravity), forces as a result of DBA, 1/2 SSE and SSE seismic loads and loads as a result of thermal changes.

The dead loads include the weight of the crane wall insulated duct panels, the weight of the intermediate deck doors and frames, the weight of the lattice frames and columns, and the

weight of the turning vanes. The weight of the ice baskets filled with ice, the slotted jet impingement plate assemblies and the door shock absorber, also act on the lower support structure.

Forces and loadings that occur during LOCA were provided by the Transient Mass Distribution (TMD) Code from analysis of double-ended breaks in an end compartment near the refueling canal, with 100 percent entrainment of water in the flow. For conservatism, all forces and loads that are a result of TMD were increased by 40% in performing the detail design and analysis for the lower support structure. However, the loads as shown on Table 6.5.10-1 are the basic forces and have not been increased by the 40% factor.

The lower support structure seismic design loads were developed using dynamic seismic analysis and the defined seismic response curves for the Sequoyah Nuclear Power Plant.

Thermal loading conditions, which result from two thermal excursions were specified for the lower support structure. One thermal excursion from 10°F to 70°F, is defined as a normal operating service load, and the other, defined as 70°F to 250°F, is the thermal excursion seen by the lower support structure following a LOCA.

The loading combinations considered in the design are given in Subsection 3.8.3.

6.5.10.2 System Design

The lower support structure is shown on Figure 6.5.10-1. The lower support structure is contained in a 300-degree circular arc of the containment. The three-pier lower support structure consists of 24 horizontal platform assemblies, 24 upper turning vane assemblies, 24 floor turning vane assemblies and 24 slotted impingement plate assemblies. The aforementioned assemblies are supported by 25 radial portal frame assemblies with columns at radii of 45'6 inch, 49'11-3/4 inch, and 55'8-1/2 inch. The 25 portal frame assemblies are spaced at approximately 12-1/2 degrees between adjacent portal frames. The total height of the structure is 9'7-3/8 inch, measured from the top surface of the floor wear slab. The design is such that the flow area at the ice basket interface for all 24 bays is at least 1088 square feet.

The horizontal platform consists of an inner and outer platform assembly for each bay. As assembled, the platform includes inner, middle and outer straight circumferential beams which span each portal frame. Nine radial beams formed by boxed-channel sections are welded to the inner, middle and outer circumferential beam. There is horizontal cross bracing between the inner and middle circumferential beams and the outer and middle circumferential beams.

The outer horizontal platform assembly consists of nine radial beams welded to the outer circumferential beam and welded to a channel-shaped plate girder which forms one half of the middle circumferential beam. The inner horizontal assembly is similar to the outer platform assembly. The channel-shaped plate girders of the inner and outer horizontal platform assemblies are field bolted to form a continuous middle circumferential beam.

For each bay, the platform inner and middle circumferential beams are connected to the portal frames with a shear connection, i.e., no moment is transmitted to the columns. The outer circumferential beam is shear connected to the portal column, but the connection is designed to transmit moment about a vertical axis. Every alternate horizontal platform (per bay) is connected

to the columns at one side by bolted connections, which are slotted along the axis of the circumferential beams to accommodate circumferential thermal expansion. The adjacent bay is not slotted in the circumferential direction and supplies the tangential shear resistance for the slotted bay.

There are nine radial beams in each portal bay and each radial beam supports nine ice basket columns. Provision is made for attaching, by bolting, each ice basket column to the radial beams.

The inner and outer circumferential beams of the platform assembly have the lattice frame column supports bolted to them. The insulated duct panels on the containment wall interface the floor and the insulated duct panels on the crane wall are supported by the inner circumferential beams of the lower support structure. The inner, middle, and outer circumferential beams are straight beams.

Each radial portal frame is comprised of three columns. The primary radial shear resistance is provided by a 1 in. thick plate box section that welds to the inner and middle columns (columns at radii 45'6 inch and 49'11-3/4 inch, respectively), thus forming a steel shear wall. The outer column (radius 55'8-1/2 inch) is attached to the middle column assembly by a 1 in. thick plate as shown on Figure 6.5.10-1. The 1 in. thick plate is pin-connected to the outer column by bars pinned at both ends and welded to the middle column. The column base plates are pin-connected to the ice condenser support floor. To accommodate thermal expansion, the middle pier column pin connections are designed to allow radial expansion, and every other outer column base plate pin connection is designed to allow circumferential expansion. The inner pier columns (near the crane wall) are designed to transmit all three force components. The base plate pin arrangement is shown on Figure 6.5.10-2. The lower inlet door shock absorbers are mounted to the 1 in. thick plates that are welded to the inner and middle columns of the portal frames of the lower support structure.

Tangential or circumferential rigidity of the lower support structure is provided by a cross bracing system between the outer columns. The cross bracing system is provided in alternate bays, which coincide with the bays in which the circumferential platform beams are not slotted in their axial direction at the column attachment points.

To turn, direct and distribute the flow through the lower inlet doors during a LOCA, each portal bay has five turning vanes that span between the adjacent radial portal frames. The vanes are as indicated on Figure 6.5.10-1. The vanes are slotted on one side in each bay to allow circumferential thermal growth. The vanes are also slotted at the other end to facilitate positioning of vanes to provide clearance of the vanes above the wear slab.

In addition to the turning vanes, a beam gridwork spans between adjacent outer columns (Figure 6.5.10-1) and acts as a jet impingement shield for the fluid flow not turned by the vanes. The beam gridwork assembly is provided in each bay of the lower support structure and is attached to the outer columns with a bolted connection. Similar to the turning vanes, the beam gridwork assembly is bolted on one side with slotted holes to allow for circumferential thermal growth.

The materials for the lower support structure are ASTM-A588 steel. Bolting materials are ASTM-A320 Grade L7 and nut material is ASTM-194 Grade 7. These materials conform to the

requirements stated in Subsection 3.8.3. All welding meets the requirements of the American Welding Society Structural Welding Code-1972-AWS Publication D1.1-72.

The material used for the pins in the lower support structure is ASTM-A434 steel, E4340, Class BD. The material is normalized, then quenched and tempered. Chemical properties, physical test data and Charpy-V Notch test values at minus 20°F are required.

Bolting materials are ASTM-A320 Grade L7 and nut material is ASTM-194 Grade 7. These materials conform to the Design Criteria, Subsection 3.8.3. All welding meets the requirements of the American Welding Society Structural Welding Code-1972-AWS Publication D1.1-72.

The minimum yield stress as defined in AISC-69 Code, was reduced by 10 percent for design purposes. This is more conservative than the requirements of Subsection 3.8.3 - Design Criteria.

6.5.10.3 Design Evaluation

1. General

The lower support structure was analyzed using a finite element model. The ANSYS structural analysis program was used in the analysis. The seismic responses, in terms of equivalent acceleration and interface forces, in two horizontal directions (radial and tangential) and the vertical direction (z) were developed from a dynamic seismic response analysis performed for a combined lattice frame/ice basket/lower support structure model. The seismic loads, as well as loads due to dead weight, thermal and the forces due to DBA, were applied to the lower support structure as static forces.

Figures 6.5.10-3 through 6.5.10-8 show the finite element model used to represent the three pier lower support structure. The model is comprised of three dimensional beam elements having six degrees of freedom per node; flat triangular shell elements, each having six degrees of freedom per node such that both membrane and bending action of the plates is considered; and general six degrees-of- freedom lumped masses having a 6 x 6 diagonal mass matrix with three values, M_x, M_y, M_z and three moments of inertia, I_x, I_y, and I_z. No horizontal ice mass was considered since this effect on the seismic response was accounted for in the results of the dynamic analysis of the combined lattice frames/ice baskets/lower support structure model. Rotary inertia terms were not used for the lumped masses.

2. Structural Representation

Figure 6.5.10-5 shows an overall view of the one bay finite element model of the structural members. Each of the line members represents three dimensional beam elements as follows:

Columns	- WF12 x 120 lb/ft.
Inner Circumferential Beam	- Built Up Plate Beams
Middle Circumferential Beam	- Built Up Plate Beams
Outer Circumferential Beam	- Built Up Plate Beams
Platform Bracing	- 3 in. Diameter Bars

Radial Beams	- Channels, 10 inch x 25 lbs/ft. with Web Plates and Nose Angles
Circumferential Brace	- Built Up Section From Angles
Door Shock Absorber Box Section	- 1 in. Flange Plates and 1 in. Web Stiffeners
Slotted Impingement Plate	- 3/4 in. Plate with Tee Stiffeners

The beam gridwork which spans the chord between the two outer columns was modeled using equivalent beam elements. The beam properties were developed considering the composite action of the beam gridwork assembly. In the computations, the minimum cross section through the beam gridwork was used to determine the equivalent bending properties. Figure 6.5.10-5 shows the beam representations of the beam gridwork.

Two one inch plates are used to distribute the loads from the lower inlet door shock absorber to the portal frame. The one inch plates form a box section assembly composed of flange plates with internal rib stiffeners. The box assembly welds to the inner and middle columns in each portal frame.

An equivalent modulus and thickness were calculated for the uniform flat triangular shell elements used to model the portal frame box section assembly. Figure 6.5.10-8 shows the element pattern of the triangular elements used.

At beam connections where the beam centroidal axes do not intersect, either rigid links or specified offsets, which can be automatically accommodated for ANSYS beam elements, were used to preserve geometric compatibility between the elements. The connections of the horizontal platform to the portal frame were considered to be pin connections except at the outer column line where it is assumed that a moment around a vertical axis can be transmitted.

The beam gridwork assembly is attached to the outer columns assuming no moment can be transmitted from the assembly to the columns.

Similarly, the upper and floor turning vanes are idealized as beam elements which are pin connected to the portal assemblies. The remaining structural connections were considered to be moment connections.

Mass Distribution

Structural Mass: The structural mass of the lower support structure is represented automatically in the ANSYS program through the use of consistent mass matrices associated with each of the structural finite elements. Thus, only the material density is input to account for the structural mass. For the plate model of the impact plate box section, a density was calculated to preserve the correct structural weight considering the composite plate to be comprised of two one-inch plates.

Ice Mass: The mass of the ice baskets is represented as lumped masses at node points along each radial beam as shown on Figure 6.5.10-6. The mass was distributed as shown on Figure 6.5.10-6 and is based on the geometric placement of the ice baskets on the radial beams. Only mass in the vertical, Z direction, was assigned to the lumped masses representing the ice baskets, since the horizontal seismic effect of the ice basket mass was incorporated as loads on the radial beams. The horizontal seismic loads were determined from a dynamic analysis of a combined lattice frame/ice basket/lower support structure model.

Displacement Boundary Conditions

Displacement boundary conditions were not specified for the tops of the columns nor for other nodes contained in the column radial plane. However, forces are applied to the columns which account for the adjacent bay loading.

To accommodate the thermally induced loads in the structural members, the base plates of the two middle columns are free to expand in a radial direction. Likewise, to accommodate the circumferential thermal expansion, every other outer column base plate connection is free to expand circumferentially.

Referring to Figure 6.5.10-3 which shows a schematic of the ice condenser floor and the column lines, the above boundary conditions imply that the outer column bases at odd numbered column lines are restrained against motion in the vertical, radial and circumferential directions, while the other column bases at even numbered column lines are free to displace circumferentially.

The middle columns are free to move in the radial direction at all column lines and the inside columns (near the crane wall) are restrained for all three translations at all column lines. These boundary conditions minimize the thermally induced stresses and the floor loads.

Seismic Loads

a. General

Analysis indicates that the frequency of the lower support structure is sufficiently high relative to the peaks of the response spectra and is one mode dominant in the vertical direction, so that a seismic modal response analysis is not required. Instead, an equivalent static analysis was performed for vertical accelerations based on the assumption of one mode dominance. For horizontal seismic loads, the largest forces in the radial and tangent directions as determined from a dynamic analysis of a combined ice basket/lattice frame/lower support structure model were applied as static concentrated forces to the lower support structure.

b. Vertical Excitation

For vertical seismic excitation of the lower support structure, a value of 0.55 g was used for the Safe Shutdown Earthquake (SSE) and 0.35 g for the 1/2 Safe Shutdown Earthquake (1/2 SSE). The floor reaction forces and internal structural forces and moments corresponding to both SSE and 1/2 SSE loading were obtained by scaling the results for the gravity loading case by ± 0.55 and + 0.35, respectively.

c. Horizontal Radial Excitation

To account for the seismic loads transmitted from the ice baskets, lattice frames, and lattice columns, a dynamic analysis of the lattice frame and ice basket structures coupled to the lower support structure by means of flexibility coefficients which represent the lower support structure was performed. The loads transmitted to the lower support structure at the interface between the lower support structure and the ice baskets were applied as static concentrated forces. To account for the seismic loads transmitted from adjacent bays, radial forces were applied to the model at the required nodes. The earthquake loads are tabulated in Table 6.5.10-1.

d. Horizontal Tangential Excitation

The tangential loads transmitted from the lattice frames and ice baskets were determined in the same manner as the radial forces from the dynamic analysis performed.

The total tangential loads applied to the radial beams by the ice baskets were distributed in the same manner as the mass as shown on Figure 6.5.10-6. Since the ice baskets are attached to the top surface of the radial beams, concentrated torques were applied at each of the nodes of the radial beams to account for the distance of approximately six inches from the top of the radial beam. The seismic loads from adjacent bays were considered by applying concentrated circumferential forces to the appropriate nodes. The loads considered are tabulated in Table 6.5.10-1.

Blowdown Loads

a. General

The blowdown forces applied to the lower support structure have been divided into four classifications:

i. Vertical Forces
ii. Horizontal Radial Forces
iii. Lower Inlet Door Impact Forces
iv. Horizontal Tangential Forces

The following sections discuss the loads for each of the classifications and the application of the loads to the finite element model of the three pier lower support structure.

b. Vertical Blowdown Loads

i. General

The vertical uplift loads acting on the lower support structure arise from the following phenomena:

a) Uplift on the ice baskets
b) Uplift on the radial beams
c) Uplift on the horizontal platform bracing
d) Uplift pressure across the intermediate deck
e) Uplift on lattice frames and lattice columns

The forces are transient in nature. However, only the basic static values with Dynamic Load Factors applied to account for the transient nature of the loading have been applied to the structural model.

ii. Uplift on Ice Baskets

The force per ice basket is as shown in Table 6.5.10-1. These loads were applied as concentrated vertical forces acting at the nodes of each radial beam, as shown on Figure 6.5.10-6. The node positions approximate the actual ice basket attachment points.

To account for the force on ice baskets in the adjacent bays, concentrated forces are applied at nodes 14, 314, 34, 334, 54 and 354 and are distributed in accordance with the adjacent bay mass shown on Figure 6.5.10-6.

iii. Uplift on the Radial Beams

The distributed uplift force on each radial beam of the inner platform and each radial beam of the outer platform are shown in Table 6.5.10-1. The loads were applied to the finite element model as a uniformly distributed load acting on each of the beam elements comprising a radial beam, for each of the nine radial beams.

For the force on the radial beams of adjacent bays, concentrated vertical forces were applied to nodes 14, 314, 34, 334, 54, and 354 and were distributed to account for the differences in spans between the inner and outer platforms.

iv. Uplift on the Horizontal Platform Bracing

The total uplift force acting on the cross bracing in the inner and outer segment of the platform (between the inner and middle circumferential beams and between the middle and outer circumferential beams, respectively) are shown on Table 6.5.10-1.

One-half the total load for each platform segment was applied at the intersection of the two cross brace elements, or node 1199 for the inner platform and 1200 for the outer platform. The remaining one-half of the total load was distributed equally to the four end points of the cross bracing in each segment of platform.

Analogous to the other load conditions, the drag on adjacent bay cross bracing was accounted for by concentrated forces applied as nodes 14, 314, 334, 54 and 354.

v. Uplift Pressure Across Intermediate Deck

The uplift pressure acting on the intermediate deck plus hinge loads from the intermediate deck doors are as indicated in Table 6.5.10-1.

These loads are transmitted through the eight lattice columns to the lower support structure. These loads were applied as concentrated forces at nodes 1000, 1006, 1012, 1018, 1180, 1186, 1192 and 1198, the lattice column attachment points, assuming the end node columns 1000, 1018, 1180 and 1198 carry one-half the load of the center ones.

For the lattice columns attached to the outer circumferential beam, there is an offset from the base of the lattice column to the centroidal axis of the circumferential beam. Thus, concentrated torques were applied to the node points 1180, 1186, 1192 and 1198 on the outer circumferential beam.

Adjacent bay loading was accounted for as was other loads by applying concentrated forces at nodes 13, 314, 54 and 354, and a torque at nodes 14 and 314.

vi. Uplift on Lattice Frames and Lattice Columns

The force on the lattice frames and columns are as shown on Table 6.5.10-1. The total bay force for these lattice frames was assumed to distribute equally as concentrated vertical forces at the eight lattice column attachment points 1000, 1006, 1012, 1018, 1180, 1186, 1192 and 1198, assuming the end columns carry one-half the load of the remaining columns.

Torques were also applied to the outer circumferential beam nodes 1180, 1186, 1192 and 1198 to account for the offset, as discussed previously. Concentrated forces were applied to nodes 14, 314, 54 and 354 and torques at 14 and 314 to account for adjacent bay loading.

c. Horizontal Radial Blowdown Forces

i. General

The horizontal blowdown forces acting on the structure arise from the following phenomena:

a) Momentum forces on the middle circumferential beam turning vane
b) Momentum forces on the upper three turning vanes attached to the middle column
c) Momentum forces on the floor turning vane attached to the middle column
d) Momentum loading on the slotted impingement plate
e) Forces on the outer circumferential beam
f) Radial forces on the ice baskets

ii. Momentum Forces on Turning Vanes

The total load per vane is shown in Table 6.5.10-1. The force shown acts through the center of curvature of the vanes and at 45° with a vertical axis. The loads were applied as concentrated forces to the nodes contained in the beam representations of each vane. The total loads were assumed to distribute by the tributary length associated with each node. Adjacent bay loads were considered by applying one half the specified total bay force to the vane attachment points.

iii. Pressure on Slotted Impingement Plate

The jet impingement pressure acting on the slotted plate spanning the chord between the outer columns is given in Table 6.5.10-1. Similar to the vanes, the total force was assumed to distribute by the tributary length of beam element associated with each node of the beam simulation of the slotted plate. Adjacent bay loads were handled the same as the turning vanes.

iv. Forces on Outer Circumferential Beam

The radial outward force acting on the outer circumferential beam is shown in Table 6.5.10-1. These forces were applied as a distributed load to the beam element representing the circumferential beam. The adjacent bay loads were considered by applying concentrated forces at the outer circumferential beam reaction nodes 14 and 314.

v. Radial Forces on Ice Baskets

The radial force per ice basket was taken to be 17.9 lb/ft. Since there is a lattice frame six feet above the lower support structure, it was assumed that one-half of the load or three feet was carried by the lower support structure, giving a force of 53.7 lbs per ice basket. This gives a total radial force of 483 lbs per radial beam which was distributed among the nodes of each radial beam. The adjacent bay ice basket radial force was considered by applying concentrated radial forces at nodes 14, 314, 34, 334, 54 and 354, analogous to the seismic loads.

d. Lower Inlet Door Impact Load

From studies and tests performed on the peak force transmitted through the crushable material used to arrest the inlet door motion, at total static tangential load of 60 kips per door was applied to the lower support structure. The dynamic pulse characteristics of the force were accounted for by recommending a dynamic load factor of 2.0 for the rectangular pulse taken to represent the force versus time relationship for the crushable material.

From geometric layouts, it was determined that the force would be applied to approximately one-half of the plate box section between the inner and middle columns. The loaded area of flat triangular plate elements is shown shaded on Figure 6.5.10-8. Concentrated radial forces were applied at nodes 42 through 47, 72 through 77, and 372 through 377 for the door force.

The door impact load was applied simultaneously in the same direction at both column lines 1 and 2 as a worst case. Thus, the loading considered is antisymmetric tangential loading on the one bay model and creates an overturning moment about a radial axis through the lower support structure. In the design of the lower support structure, the bolt connections between the columns and the circumferential beams are designed to consider the possible loading from the door impact loads being applied in opposite tangential directions on the door arrestor plates.

e. Horizontal Tangential Forces

The tangential force acting on the ice baskets due to cross flow in the ice condenser chamber was taken to be 23.8 lbs. per linear foot. Similar to the radial forces, three feet of ice basket (one-half of the span between the top of the lower support structure and the attachment of the ice baskets to the first lattice frame) was considered. The loads were applied to the finite element model as uniformly distributed loads on each of the beam elements comprising a radial beam.

Analogous to the tangential seismic loads, the loads are applied at the top face of the radial beams where the ice baskets are attached, thereby applying torques to the radial beams. Therefore, concentrated torques are applied at each of the node points of the radial beams.

The adjacent bay loading was considered by concentrated forces at nodes 14, 314, 334 and 354.

3. Dynamic Load Factors

To account for the dynamic nature of the blowdown forces, dynamic load factors were applied to the DBA forces applied statically to the finite element representation of the lower support structure. The dynamic load factors (DLF) are as follows:

a.	Vertical Uplift Forces	DLF = 0 or 1.8
b.	Horizontal Radial Forces	DLF = 0 or 1.2
c.	Lower Inlet Door Impact Forces	DLF = 0 or 2.0
d.	Horizontal Tangential Forces	DLF = ± 1.2

Transient Analysis of Blowdown Loads

Following a LOCA, the inlet doors open admitting steam flow into the ice condenser chamber. The fluid flow through the lower support structure and upward through the ice bed cause time-dependent forces to be applied to the lower support structure. In general, there are four classifications of transient forces applied to the lower support structure: (1) vertical forces on the radial beams, ice baskets, lattice frames, lattice columns, and intermediate deck; (2) horizontal radial forces acting on the outer columns, the jet impingement plate, the outer circumferential beam, and turning vanes attached to the middle circumferential beam and middle column; (3) tangential forces, applied to the impact plates attached to the portal frames, resulting from arresting the motion of the inlet doors; and (4) tangential forces on the radial beams due to cross flow in the ice condenser compartment.

For the vertical forces, the time dependence of the forces on each ice basket is shown on Figure 6.5.10-9, and the time dependence of the pressure across the intermediate deck, thus the forces, is shown on Figure 6.5.10-10. The time dependence of the horizontal radial forces acting on the turning vanes, outer columns, jet impingement plate and outer circumferential beam are shown on Figure 6.5.10-11 for a cold let break and Figure 6.5.10-12 for a hot leg break. A cross flow force time dependence was not defined; however, it was assumed that the time dependence for the tangential forces is the same as for the radial forces. Since the actual magnitude of the cross flow forces is small, the time-dependence assumption will not greatly affect the results.

In arresting the motion of the inlet doors, a pulse-type loading is applied to the lower support structure, which is taken to be a regular pulse with maximum force equal to 60 kips with a duration of 16 milliseconds.

Single Degree of Freedom Representation

In general, the transient structural response of a multidegree of freedom system is given by the expression:

$$Y_i(t) = \sum_{J=i}^{N} \Gamma_j \, \eta_j(t) \, \psi_{ij} \qquad (1)$$

where,

$y_i(t)$ is the structural responser at any time t.

Γ_j is the jth mode shape of the structure.

Ψ_{ij} is the participation factor of the jth mode shape for the transient load.

$\eta_j(t)$ is the generalized coordinate of the jth mode shape at any time (t).

The generalized coordinate η_j of the jth mode is given in terms of the forcing function f(t) by Duhamel's integral, or the convolution integral as:

$$\eta_j(t) = \omega \int_o^t f(\tau) \sin \omega (t - \tau) \, d\tau \qquad (2)$$

Thus, the expansion for the generalized coordinate for each mode, j, is the same as the amplification factor, or Dynamic Load Factor definition for a single degree of freedom system:

$$DLF(t) = \omega \int_o^t f(\tau) \sin \omega (t - \tau) \, d\tau \qquad (3)$$

Assuming that $\Gamma j = 1$ for some $j = k$ and $\Gamma j \approx O$ for $j \neq k$, amounts to the assumption that only one mode dominates in the structural response to the transient. In this case, the structural response becomes:

$$y_i(t) = \eta k(t) \quad \psi ik \qquad (4)$$

or,

$$y_i(t) \cong D\ (t)\ \psi ik \qquad (5)$$

in which case the maximum structural response is given by:

$$y_{i\max} \cong DLF_{\max}\ \psi ik \qquad (6)$$

Assuming that the dominant mode ψik can be approximated by the static deflection shape due to the loads applied to the structure, the maximum structural response can be approximated by:

$$y_{i\max} \cong DLF_{\max}\ y_{i\,static} \qquad (7)$$

Thus, assuming that the response of the lower support structure to the transient blowdown forces may be represented by Equation (7), the dynamic effects of the transient may be investigated by evaluating the transient response spectra given by:

$$DLF_{\max}(\omega) = \max_{over\ t}\ \omega \int_{o}^{t} f(\tau)\ \sin\ \omega(t-\tau)d\tau \qquad (8)$$

evaluated for ω=lωη where ωη is the natural frequency estimated for the lower support structure.

Computation of Transient Response Spectra

The development of the transient response spectra corresponding to the blowdown forces shown on Figures 6.5.10-9, -10, -11, and -12, was done by numerically evaluating the convolution integral given by Equation (2) for discrete values of time, t, then finding the maximum DLF(t*) over the range $0 \leq t^* \leq T$, where T was the end of the transient as determined from the TMD code as discussed in Paragraph 6.5.11.1. In the computations, the transient shown on Figures 6.5.10-9, -10, -11, and -12 are represented as a series of straight line segments.

The evaluation of the dynamic load factor as a function of time, was made at discrete time points with the interval Δt given as:

$$\Delta t < \frac{1}{10 f_{max}} \qquad (9)$$

where f_{max} is the maximum frequency in Hz considered in the transient response spectra. Thus, the time interval was chosen sufficiently small so that it was no larger than 1/10 of the smallest period of free vibration considered in the transient response spectra.

Figures 6.5.10-13, -14, -15, and -16, show plots of the transient response spectra for the vertical ice basket forces, pressure across the intermediate deck, radial horizontal force due to a cold leg break and radial horizontal forces due to a hot leg break, respectively.

From the figures, it was decided that a dynamic load factor of 0 to 1.8 should be used for the two vertical uplift forces, and 0 to 1.2 should be used for the horizontal forces, including the circumferential (tangential) forces.

Since the transient for the forces applied to the structure in arresting the motion of the inlet doors was taken to be a rectangular pulse, the transient response spectra may be found in the literature.

Considering the frequency of the lower support structure, a Dynamic Load Factor of 0 to 2.0 was considered to represent a conservative design value for the effect of door impact on the structure. Also, in the design of the structure, a complete reversal of the door impact forces is considered.

Discussion

The recommended dynamic load factors are the maximum values from the transient response spectra for zero damping and for a frequency greater than 10 Hz. When evaluating the Dynamic Load Factor to be used, the combined dynamic action of the lower support structure and the supporting floor must be considered. Preliminary estimates of the lowest frequency for the coupled floor-structure system are in excess of 11 Hz.

As previously stated, transient response spectra used to determine the DLF are for zero damping, rather than, a damping of between 5 to 10 percent, which is appropriate for the highly stressed, bolted lower support structure. Damping will reduce the dynamic response as indicated on Figures 6.5.10-15 and 6.5.10-16 which show the response for horizontal forces for 0, 5, 10 and 20 percent damping; thus the DLF recommended are conservative from this standpoint.

For multi-degree of freedom systems, a single DLF cannot theoretically be specified. However, if the structure responds predominantly in a single mode that has a mode shape which approximates the static deflected shape resulting from the applied forces, a conservatively derived DLF can be used for practical design. For the lower support structure, preliminary estimates of the combined floor-lower support structure frequencies indicate that the lowest frequency will be greater than 11 Hz and the third mode will be in excess of 15 Hz. The DLF applicable to the higher modes, as indicated on Figures 6.5.10-13, -14, -15, and -16 will be 15 to 25 percent less than the DLF value specified for the DBA forces. Therefore, by specifying the peak DLF value for the transient, the actual forces applied to the structure will be conservative.

In addition to the conservatism used to derive the DLF's used for design, additional conservatism has been incorporated into the design by specifying that the forces scaled by the DLF's to be applied to the structure in the worst manner to determine the maximum member forces. Since the maximum DLF for each transient will not occur at the same time, combining the member forces derived for each transient in this manner is conservative. In particular, an RMS combination similar to that used in earthquake analysis could be justified because of the time separation of peak occurrence.

Also, as discussed in Section 4, below, the allowable stresses used for design load conditions which include the DBA have been specified as 0.9 times the yield stress of the lower support structure material after normalizing. This requirement is more conservative than that specified in Subsection 3.8.3.

Conclusion

The recommended DLF's have been conservatively derived and applied in the design of the lower support structure. Therefore, the resultant member forces determined for the DBA, using the recommended DLF, result in a conservative prediction of the stresses induced in the structure.

4. Design Load Case

It can be seen from the magnitude of forces shown in Table 6.5.10-1 that the proportions of all members and structural elements of the lower support structure are sized by the load combinations which include DBA forces. The DBA forces are 2 to 5 times larger than other forces that are applied to the lower support structure. Therefore, only the load combinations which include DBA forces are presented.

For design of the lower support structure, the following load condition was used:

$$DL + TN + EV + ER + ET + AV + AR + AT + LIDI \leq 0.9\ YIELD$$

where YIELD is defined as the yield strength of the material after normalizing.

DL	=	Gravity
TN	=	Thermal 70°F to 250°F
EV	=	Safe Shutdown Earthquake Forces in the Vertical Direction
ER	=	Safe Shutdown Earthquake Forces in Radial Direction
ET	=	Safe Shutdown Earthquake Forces in the Tangential Direction
AV	=	Vertical Forces Due to DBA as Defined in Paragraph 6.5.10.3
AR	=	Radial Horizontal Forces Due to DBA as Defined in Paragraph 6.5.10.3
AT	=	Tangential Horizontal Forces Due to DBA as Defined in Paragraph 6.5.10.3
LIDI	=	Lower Inlet Door Impact

Because of the oscillatory nature of the DBA forces, the above loading condition results in two maximum equivalent static design load cases which have different Dynamic Load Factors for DBA forces. The two load cases correspond to the maximum uplift condition on the lower support structure and a maximum down load on the lower support structure. For the maximum uplift case, the load equation including dynamic load factors (DLF) is:

$$DL + TN + EV(UP) + ER + ET + 1.8\ AV + 1.2\ AR + 1.2\ AT + 2\ LIDI \leq 0.9\ YIELD$$

The second load case, maximum down force is similar to the aforementioned load case, with the exception that the DLF for the vertical DBA is taken equal to zero and the vertical SSE forces (EV) are assumed to act downwards. The DBA forces used in the detailed analysis have been increased, as previously mentioned, by 40% from those listed in Table 6.5.10-1.

5. Results of Stress Analysis

Members

The stresses in the various structural members for the two design load cases specified are tabulated in Table 6.5.10-2. For each load case, the following format is used for the stresses tabulated in the table: the stresses induced in the member due to the axial member forces are shown in the first column; the stresses induced due to moment about the local member y axis are contained in the second column, and those induced in the member around the local member z axis are contained in the third column. The fourth column presents the maximum stresses in the member considering biaxial bending and the axial force.

Joints

The member forces at connections from the two load cases previously discussed that include DBA forces were used to proportion the connections. In the design of the connection for the load conditions including DBA, the recommendation of the AISC - 69 Code section 2.8 were followed. In summary, the normal allowable AISC - 69 Code limits for bolted and welded connections were increased by 1.7 to determine an equivalent yield point stress condition. To be consistent with the conservative approach used in proportioning members, the allowable stresses were scaled by 1.7 and then multiplied by 0.9 to determine the joints stress limits used in the design.

6.5.10.4 Testing and Inspection

A 100 percent inspection and evaluation for any gross ice buildup in the lower plenum will be performed. The lower plenum consists of the lower support structure, turning vanes, and associated components. Any identified ice buildup will be removed (Reference 29).

6.5.11 Top Deck and Doors

The top deck, intermediate deck, containment shell, crane wall and end walls form the boundaries of the ice condenser upper plenum. The upper plenum houses the air handling units and the distribution ducts to the wall panels and provides a working space for loading, weighing and maintaining the ice baskets.

6.5.11.1 Design Basis

Function

An array of blanket panels forms a thermal and vapor barrier atop the upper plenum, allowing limited movement of air through vents during plant operation and free outflow of air during DBA. A grating deck supports the blanket panels and accommodates traffic by inspectors. The top deck structure supports the grating as well as the bridge crane and rail assembly and the air handling units.

Loading Modes

The following loading conditions are considered in the design of the top deck: Deadweight, seismic loads, blowdown loads, and live loads. The top deck structure will withstand these loads and remain within the allowable limits established in the Design Criteria.

Design Considerations

1. The blanket panels are hinged on top of the crane wall. The major loads are applied directly into the crane wall.

2. A blanket panel must be flexible, i.e., be capable of deforming out of its plane in response to relatively low forces without disintegrating. Deformation of panels during DBA is permissible, but formation of missiles must be averted.

3. The deck forms an integral part of ice condenser performance during DBA. Structural loads are a function of air pressure and flow relationships, which in turn are affected by deck characteristics.

4. The top deck structures are subjected to loads from the air handling unit.

Material Consideration

1. Refer to Subsection 3.8.3 of the Design Criteria for steel structures.

2. Blanket material must be fire resistant by its own composition or by means of a suitable cover sheet.

3. Blanket material must not be significant source of halides in gaseous form, either by gradual diffusion of inherent ingredients or by radiolysis of component materials following a DBA.

4. Blanket material must not be a significant source of leachable halides during exposure to containment spray following a DBA.

Thermal and Hydraulic Performance Requirements

1. Heat input to the plenum through the top deck assembly is limited to 13.5 BTU/hr-ft^2.

2. Resistance to air flow during DBA is minimized, in terms of both inertia of panels and obstruction by grating. Panels may reclose or remain open following DBA. Panels open on low differential pressure for small flow rates.

3. A vapor barrier is established on the upper surface of the blanket panels.

Interface Requirements

1. In the process of opening, adjacent blanket panels will interfere with each other. This is acceptable in view of their flexibility.

2. Sealing strips are installed to connect panel vapor barrier to adjacent panels, to crane wall, to end walls and to containment shell, without transmitting appreciable loads to the containment shell.

3. The grating rests on, and is attached to, the cross beams between the top deck beams and transmits operating and drag loads to these structures. The structural members receive loads from bridge crane and air handling units as well as the deck itself.

Design Loads

Design loads used in the design of the top deck assembly are shown in Table 6.5.11-1.

6.5.11.2 System Design

The design of the top deck is shown in Figure 6.5.11-1.

The top deck doors consist of radially aligned flexible blanket panels resting on a grating deck and hinged on top of the crane wall.

A blanket pair covers one-half bay, extending from the radial centerline of a bay to the edge of the adjacent top deck beam. It consists of two blanket assemblies, one resting on the grating, the second one resting (mirror image) on the first one, with bands touching.

The parts of a blanket assembly and their respective functions are as follows:

1. Thermal insulation is provided by a flexible polyurethane foam blanket, 1 inch thick.

2. Approximately one-half of the centrifugal load is carried by bands of fully hardened stainless steel, 0.005 inch thick.

3. A stainless steel cover sheet ("skin") or similar material serves as a vapor barrier (top surface), protects the blanket against wear and fire (top and bottom surfaces) and provides all of the lateral and about one-half of the centrifugal strength.

4. Parts (2) and (3) are bonded to the faces of the foam and extended along one edge to form a hinge.

The grating deck performs the structural functions of the top deck during non-accident conditions. It is supported from pairs of cross beams spanning the top deck beams, and its upper surface is flush with the top of the top deck beams. The bearing bars of the grating run parallel to the centerline of the particular bay. They are 2 inches high, 3/16 inch thick, and spaced on 2-3/8 inch centers. This design satisfies all requirements for open area and upward drag loads during DBA as well as for normal traffic loads. A clearance of no less than 4.0 inches is maintained between the grating and the containment.

The grating is fabricated from carbon steel, ASTM-A569-72, and provided with trim banding adjacent to top deck beams. Completed grating sections are galvanized for corrosion protection.

A hinge bar clamps one edge of each blanket assembly to the top surface of the crane wall. Anchor bolts transmit the hinge loads into the crane wall.

Fixed insulation pads are tacked to the top of the radial beams.

Flexible seal membranes are attached between vapor barrier (top) surfaces of the blanket panels and against containment liner, end walls, and fixed insulation.

A pressure equalization vent curtain is installed around the periphery of the top deck. The curtain minimizes diffusion of air under steady state conditions while permitting free movement of air in or out during momentary periods of pressure imbalance.

Fabrication

1. Grating sections are fabricated to specific shapes, complete with trim handling. The finished assemblies are cleaned and hot dip galvanized.

2. Structurals are cut and welded to suit.

3. Blanket assemblies and fixed insulation are fabricated by an insulation contractor using specified bonding methods.

4. Hinge bars are machined from rectangular steel bars and painted or galvanized.

Installation

1. The grating sections are placed and bolted down.

2. New bolts are installed in top of crane wall.

3. Fixed insulation pads and bottom layer of blankets are placed in position all around top deck.

4. Top layer of blankets is placed in position all around top deck.

5. Hinge bars are installed. Blankets are clamped. Fixed insulation is attached.

6. Vent assemblies are installed.

7. Seals are installed.

6.5.11.3 Design Evaluation

Top Deck Blanket Doors

The top deck doors were dynamically analyzed to determine the loads and structural integrity of the door for the design basis load conditions.

Using TMD results as input, the door dynamic analysis was performed using a separate computer code named the "DOOR" Program. This computer program has been developed to predict door dynamic behavior under accident conditions. This program takes the door geometry and the pressures and calculates the flow conditions in the door port. From the flow are derived the forces on the door due to static pressure, dynamic pressure and momentum. These forces, plus

a door movement generated force, i.e., air friction, are used to find the moment on the door and from this are derived the hinge loads. Output from the program includes door opening angle, velocity and acceleration as functions of time as well as both radial and tangential hinge reactions.

Analysis Due to LOCA

The net load distributions on the door opening were determined by considering the applied pressures acting on the door and then solving the rigid body equations of motion such that the net forces and moments at the hinge point are zero. In the process, this produced expressions for the inertial forces in the door and the hinge bar reaction as functions of the applied pressure. The resultant horizontal and vertical hinge loads, calculated by subsequent stress analysis.

Using this input, the blanket assembly was analyzed with horizontal and vertical forces being taken by direct stress in the skin and bands.

As inertial forces are directly accounted for in the analysis, no dynamic load factor was applied.

The hinge bar and anchor bolt stresses were analyzed under hinge reactions considering the effects of the horizontal and vertical components of the tension band. For these components, no dynamic load factor was applied since the bars are very rigid themselves and are rigidly attached to the crane wall. Stresses in the blanket floor grating due to aerodynamic drag were also calculated. Loads used for stress calculations include 40% margin above computed TMD values. Certain aspects of the dynamic performance of a flexible door (e.g., tangential distortion, whipping, bowing) cannot be modeled with sufficient confidence.

A summary of the analysis performed and results are presented in Table 6.5.11-2. All portions of the door showed factors of safety equal to or greater than one. The general acceptance criterion was that stresses be within the allowable limits of the AISC-69 Structural Code. For materials and components not covered by the Code, i.e., spring temper stainless steel, non-metallic materials, floor grating, etc., conservative acceptance criteria were established on the basis of manufacturer's recommendations or ASTM minimum tensile specifications.

Dynamic Test

A full scale test of a blanket pair (one-half bay) was performed for verification of analysis. Observed dynamic characteristics were found to correlate well with computed TMD values, and integrity of blankets was maintained within acceptable limits.

Top Deck Structure

The top deck structure was analyzed using the ANSYS finite element computer program, with three-dimensional beams representing the structural members, three-dimensional lumped masses representing the mass elements, and a stiffness matrix to represent the flexible connections in the system. Geometric compatibility is maintained using three-dimensional rigid elements.

Two bays considered representative of the system were isolated and modeled. Conservatively, four air handling units were assumed to be located in the two-bay region, two next to the crane wall and two next to the containment wall.

Stresses were calculated for the various combinations of dead load, thermal, seismic and accident conditions. A modal analysis was performed to determine seismic amplification. Blowdown stresses were calculated using a computed dynamic load factor, and a 40% margin added to TMD loads. Maximum stresses produced in major members are all within the limits of the design criteria given in Subsection 3.8.3. The circumferential struts, AHU beams and crane rails have been analyzed and are structurally acceptable.

6.5.11.4 Testing and Inspection

Inservice inspection of the top deck doors is described in SQN Technical Specification 3.6.13.

6.5.12 Intermediate Deck and Doors

6.5.12.1 Design Basis

Function

The intermediate deck forms the ceiling of the ice bed region and the floor of the upper plenum. It serves as a thermal and vapor barrier, which allows limited air movement, through vents, between regions during normal plant operation and free out flow of air and steam following DBA.

Criteria

Refer to Design Criteria in Subsection 3.8.3 for structural design criteria.

Loading Modes

The following loading conditions are considered in the design of the intermediate deck: Deadweight, seismic loads, blowdown loads, and loads due to personnel traffic on deck. The intermediate deck structure will withstand these loads and remain within the allowable limits established in Subsection 3.8.3.

Design Criteria - Accident Conditions

1. Resistance to air flow during DBA shall be minimized, in terms of both inertia of the door panels and obstruction by the frames. Panels may reclose or remain open. Panels shall open on low pressure differential for small flow rates.

2. At the end of their movement, pairs of doors will collide. Distortion at the time is acceptable, provided doors do not become missiles.

3. The doors shall be of simple mechanical design to minimize the possibility of malfunction.

Design Criteria - Normal Conditions

1. Heat conduction through the intermediate deck shall be limited to 0.6 BTU/°F-hr-ft^2.

2. The design of the deck shall permit its use as a walking surface for maintenance of the air handling units and inspection of the ice bed.

3. The design of the deck shall provide a vapor barrier between the ice bed and upper plenum area.

4. The design of the upper deck shall provide convenient access to selected ice baskets for weighing and visual inspection.

Interface Requirements

1. Sealing strips will be installed to seal deck frames to wall panels as a continuation of the vapor barrier.

2. Hinge loads, drag loads, and live loads will be transmitted from the deck through support beams to the lattice frame support columns.

3. Instrumentation cables from the temperature monitoring system will penetrate the seal area of the deck.

Design Loads

Pressure loading during LOCA was provided by the Transient Mass Distribution (TMD) code from an analysis of a double-ended hot leg break in the corner formed by the refueling canal, with 100 percent entrainment of water in the flow. For conservatism, TMD results were increased by 40 percent in performing the design analysis.

The intermediate deck design parameters and loads are presented in Table 6.5.12-1 and on Figure 6.5.12-2.

6.5.12.2 System Design

The intermediate deck is shown in Figure 6.5.12-1. For ease of manufacture and installation, the deck is separated into 48 subsections. Each sub-section covers an area extending over a length of three lattice frames and width of approximately half the ice condenser annulus. Two types of subsections are used; the inner subsection have overall dimensions of 13 ft. long by 5 ft. 7 inches wide; and the outer subsection have dimensions of 12 ft. by 4 ft. 7 inches. Except for dimensional differences, the designs of inner and outer subsections are identical.

Each sub-section consists of four door panels mounted on a steel frame. The door panels are sandwich structures, consisting of 26 gauge galvanized steel sheets adhesively bonded to a 2.5 inch thick urethane foam core. Loads developed in the sandwich structures are transmitted to two panel hinge points by a 2.5 inch x 5 in. rectangular steel tube which forms a backbone for the panel. The panel is reinforced and sealed by a peripheral channel and two internal ribs, formed from 18 gauge steel sheet.

Plates, which are welded to the ends of the tubular backbone, are drilled to accommodate 1 in. diameter stainless steel hinge pins. These pins in turn are supported by welded steel support brackets which are bolted, through the door frame, to intermediate deck support beams. Thus, hinge loads are taken directly into the support beams and not into the frame itself.

The door frame is fabricated from steel angle and T-sections. A formed channel on the frame holds a compliant bulb-type rubber seal which is compressed by the door in its closed position. In addition to being clamped in place by the hinge support brackets as described above, additional bolts in the frame angles fasten the corners of the frame to the support beams and connect adjacent members of the inner and outer assemblies to each other.

The intermediate deck support beams are 8 inches wide flange steel members, which radially span the ice condenser annulus. They are bolted to the lattice frame support columns via welded plate bracket assemblies and compliant pads. The latter feature assures that beam end moments will not be transmitted to the relatively flexible support columns.

Flexible membranes are installed between the intermediate deck frame and adjacent wall panels to provide a continuous vapor barrier.

Pressure equalization vents are installed at selected door locations on the intermediate deck. Vertical flaps minimize diffusion of air under steady state conditions while permitting free movement of air in or out during momentary periods of pressure imbalance.

6.5.12.3 Design Evaluation

The intermediate deck doors were dynamically analyzed to determine the loads and structural integrity of the door for the design basis load conditions.

Using TMD results as input, the door dynamic analysis was performed using a separate computer code named the "DOOR" Program. This computer program has been developed to predict door dynamic behavior under accident conditions. This program takes the door geometry and the pressures and calculates flow conditions in the door port. From the flow are derived forces on the door due to static pressure, dynamic pressure and momentum. These forces, plus a door movement generated force, i.e., air friction, are used to find the moment on the door and from this are derived the hinge loads. Output from the program includes door opening angle, velocity and acceleration as functions of time as well as both radial and tangential hinge reactions.

Analysis Due to LOCA

The net load distributions on the door during opening were determined by considering the applied pressures acting on the door and utilizing an analysis similar to that derived for the lower inlet door (Subsection 6.5.9), to obtain shear, moment, and hinge reactions.

Using this input the door panel was analyzed as a sandwich panel; i.e., the outer steel skins are assumed to carry tensile and compressive membrane loads, while the urethane core carries transverse shear loads between the outer skins. The tubular backbone was analyzed as a beam with biaxial bending and torsion under the combined effects of panel shear loading, panel centrifugal loading and hinge reactions. Hinge pins and support brackets, including bolting, were analyzed by considering the effects of tension, shear, and bending as appropriate. No dynamic load factor was applied, as inertial forces are directly accounted for in the analysis.

The door frame and attachment bolting were analyzed under loadings created by the differential pressure acting on the frame members. The intermediate deck beams and attachments were analyzed under the effects of loads transmitted to them by the door hinges and frames. For these latter analyses, appropriate dynamic load factors were calculated and applied.

All results indicated positive margins of safety in comparison with the structural criteria contained in Subsection 3.8.3.

During a LOCA, stopping of the doors is accomplished by impacting adjacent door panels against each other. In the process, a significant portion of the door kinetic energy is absorbed through plastic deformation of the door panels. This is an acceptable mode of behavior as long as the doors do not break up and lose their insulation or otherwise generate missiles. During simulated blowdown tests on full-scale prototype doors at levels of up to 140% of maximum pressures predicted by TMD, the ability of the doors to withstand opening and stopping loads was confirmed. Only local deformation of the panels resulted and no missiles or insulation were released.

Seismic Analysis

A response spectra nodal analysis was performed on the intermediate deck structure to determine maximum seismic loadings during 1/2 SSE and SSE. Resultant loadings on the structure were found to be negligible in comparison with LOCA loadings. Further, calculations indicated the doors will not open during either earthquake.

6.5.12.4 Testing and Inspection

Inservice inspection of the intermediate deck doors, is described in SQN Technical Specification 3.6.13.

6.5.13 Air Distribution Ducts

6.5.13.1 Design Basis

Functional Requirements

The air distribution ducts distribute the cold air from all air handling units uniformly to the wall panels. The air distribution ducts also serve to return the warmer air which is discharged from the wall panels to the upper plenum. (See Figure 6.5.13-1) The loss of the air distribution function does not affect the safety of the plant as the ice bed is a passive component and can tolerate refrigeration system failures for a week to two weeks.

Design Criteria

The air distribution ducts are permitted to deform during accident conditions but must not affect any safety related components located nearby.

Design Conditions

Normal Operation

Design temperature normal	10°F - 15°F
ΔP normal	2'WG

Accident Conditions

Accident temperature maximum (without ΔP)	190°F

6.5.13.2 System Design

The air distribution ducts are located in the upper plenum. The ducts are made of galvanized sheet steel. The design includes flexible connections separating each duct and each AHU. The flexible connections also serve as vibration breaks.

6.5.13.3 Design Evaluation

The air distribution ducts are a part of the refrigeration system and serve to distribute cold air to the wall panels thereby maintaining the readiness of the ice in the ice bed. The air distribution ducts are not required to function during an accident. The air distribution ducts, are, therefore, non-safety related components. Refer to Subsection 6.5.6 for detailed discussions of the refrigeration system performance during normal operating conditions and of its ability to tolerate refrigeration component failures.

During a LOCA, the air distribution ducts are permitted to deform. A deformation will be outward toward the crane and liner wall insulation and therefore present no problem to nearby safety related components.

6.5.14 Equipment Access Door

6.5.14.1 Design Basis

Functional Requirements

The equipment access door permits movement of crane, equipment and personnel into and out of the ice condenser plenum for ice loading and maintenance.

In closed position, the door constitutes a thermal and vapor barrier (normal plant operation) and a pressure barrier (accident condition) between ice condenser air and upper containment atmosphere.

The basic functions of the equipment access door are non-safety related. It is important, however, to prevent failure of the door in any manner that may affect safety related components located nearby.

Design Criteria and Codes

The door is designed to comply with structural requirements in Subsection 3.8.3.

Design Conditions

Normal Operation

Design temperature inside	15°F
Design temperature outside	100°F

Accident Conditions

Maximum surface temperature (without ΔP)	190°F

6.5.14.2 System Design

An equipment access door is provided in each end wall thereby providing ample access to the upper plenum. The equipment access door includes: the insulated door panel, frame and hoist assembly, gasketing, and fasteners. The door frame slides from closed to open position within a fixed frame embedded in the concrete end wall. All exposed surfaces are protected against corrosion by appropriate coating.

Limit switches are provided to monitor movement of each door and to indicate position as a part of the door position monitoring system.

6.5.14.3 Design Evaluation

The equipment access door is a non-safety related component. The door stresses during SSE + DBA loadings are below the allowable levels.

6.5.15 Ice Technology, Ice Performance and Ice Chemistry

6.5.15.1 Design Basis

The operational principle of the ice condenser is the condensation of steam by means of melting ice. Approximately one and a half pounds of ice per pound of reactor coolant are required to absorb the coolant energy to prevent excessive containment pressure and temperature buildup. The liquid resulting from the thawing process drains to the containment sump where it is utilized during the recirculation phase of cooldown by the Emergency Core Cooling System. It is, therefore, necessary that the boron concentration of the recirculated primary coolant not be diminished through the action of the ice condenser. Hence, the ice condenser utilizes borated ice, which upon bulk melting delivers an aqueous solution containing boron to the containment sump.

The complete equilibrium freezing of this solution forms a eutectic composition with a melting point of -0.42°C (31.2°F).

On a macroscopic scale, the complete equilibrium freezing of an aqueous solution of boron as sodium tetraborate, results in a solid consisting of crystals of pure ice (approximately 91% of the original water), surrounded by frozen eutectic. Microscopically this eutectic solid consists of individual crystals of pure ice and pure $Na_2B_40_7$ $10H_20$ (Reference 13).

6.5.15.2 System Design

The ice for the ice condenser is produced in machines that yield ice in the form of a continuous ribbon, 3/16 inch thick which is deposited in a storage bin via gravity chutes.

The ice is kept at subcooled temperatures by chilled air flowing through the hollow walls and floor of the bin and over the exposed surface of the ice.

Ice is pushed out of the bin by a mechanized rake and carried to an ice chopper via two screw conveyor. The chopper reduces the size of the ice flakes to approximately 2 inch x 2 inch x 3/16 inch. The ice chopper discharges through a metering hopper into a pneumatic conveying valve.

The pneumatic conveying valve feeds ice at a measured rate into a stream of chilled compressed air, which carries the ice through temporarily erected piping to either one of the ice condenser units where it is stored for manual loading or conveyed directly to the ice baskets. When directed to the baskets, the air/ice mixture is fed into a cyclone receiver atop the ice baskets where the ice drops into the basket while the air is released into the containment vessel. Air is removed during this procedure in order to maintain a stable containment vessel pressure.

6.5.15.3 Design Evaluation

As the ice condenser is to be available to perform its engineered safety feature function for the life of the plant, ice storage characteristics are an important consideration. Two mechanisms influence the long term storage of the ice, the diffusion of sodium borate crystals through the ice crystals, and the sublimation of the ice.

1. Diffusion

   For a discussion of the first mechanisms, it will be necessary to refer to the phase diagram presented in Figure 6.5.15-1. When the temperature of an aqueous sodium tetraborate solution is continuously lowered, freezing begins with the formation of crystals of pure water surrounded by the salt solution. The temperature at which the first ice crystals form (assuming no supercooling) depends on the initial concentration of the solution. For example, a solution of $Na_2B_40_7$ $10H_20$ containing 2000 ppm boron begins to freeze at - 0.41°C (+31.27°F), under one atmosphere pressure (Point A in Figure 6.5.15-1). If the freezing process is allowed to continue reversibly, i.e., under conditions of the thermodynamic equilibrium, more ice crystallizes and the surrounding solution increases in concentration according to line AB in Figure 6.5.15-1. Finally when the system temperature is -0.42°C (+31.24°F), the remaining liquid freezes to a solid with a boron concentration of 2220 ppm. The composition of this solid is known as the eutectic composition.

   If the borated ice is made by the very slow freezing process just described, the pure water crystals first formed will become the centers for further crystallization and will therefore grow until the liquid reaches the eutectic composition. The total number of these relatively large pure ice crystals will be determined by the number of nucleation sites available in the solution during the initial phase of the process. If the freezing rate is made extremely large i.e., the process is carried out in an irreversible manner, the initial crystals will not have time to grow appreciably before all the water and sodium borate have crystallized. Such a path is represented by the line CD in Figure 6.5.15-1. The solid obtained by this process will be a uniform mixture of very small crystals of two kinds, ice and sodium tetraborate.

When a collection of various-sized crystals of a substance are maintained at constant temperature and pressure in contact with a solution saturated with respect to the substance, two processes tend to occur. The larger crystals tend to grow at the expense of the smaller ones, and the crystals of irregular form tend to become regular of form. Both of these phenomena are manifestations of systems tending toward thermodynamic equilibrium where the total free energy of the system (in this case the surface free energy) is at a minimum. The solution referred to above can also be a vapor and in the simplest case can be the pure saturated vapor of the crystalline substance. Note that kinetically the two processes are competitive and that both are subject to diffusional control. Therefore, diffusion of molecules, from one site to an adjacent one of the same crystal would be favored over migration to another large crystal, in the case where rapid cooling of very dilute solutions causes many crystals to form that are small compared to the separation between them. Such is the case in practice with the ice condenser.

The driving force for diffusion between crystals of sodium borate through the pure ice matrix is a concentration gradient. If a large crystal is tending to grow, it will cause depletion of sodium and borate ions in the immediately surrounding ice. If a small crystal tends to give up sodium and borate ions to feed the growth of the larger crystal then there will be an increase in the concentrations of sodium borate surrounding the shrinking crystal. Since ice and sodium borate do not form an appreciable solid solution (note eutectic mixture of ice and sodium borated crystals), then the concentration of sodium borate around the shrinking crystal can not be large. For the sake of constructing an upper bound on diffusional effects in the borated ice, assume the maximum concentration to be ~ 10% of the eutectic solution concentration (i.e., 220 ppm).

Diffusion of sodium borate across a slab of pure ice can be determined as follows:

Data for the diffusion of sodium borate in ice are not available, but the self-diffusion coefficients for deuterium, tritium and oxygen (18) in ice have been reported by Franks. (Reference 14) At -11°C (+12°F) the value for all species is ~ 10^{-11} cm^2/sec. Assuming that the coefficient for sodium and borate ions is of the same order of magnitude, the rate of diffusion of sodium borate through a 1/32 inch slab of pure ice is estimated to be ~ 2 x 10^{-13} g/cm^2-sec. for an initial concentration of 220 ppm boron. If the concentration of boron in the ice phase on one face of the slab remained constant at 220 ppm while diffusion through the pure ice slab took place it would take over 100 years for an amount of boron in a single piece of condenser ice to diffuse 1/32 inch, or halfway through the ice flake.

Since the quick frozen borated ice is of stable uniform composition, then upon bulk melting there should be formed a solution of borax of uniform concentration. If the entire borated ice-mass were to be uniformly warmed above -0.42°C (+31.24°F) then melting would begin at the points of contact between water crystals and $Na_2B_40_7$ $10H_20$ crystals, and the ice-mass would lose structure. This is a phenomenon known as "rotting" and has been observed at times in sea-ice which has been subjected to slow (order of hours or days) temperature excursions to just above the melting point. If the melting process is rapid then the fact that the borated ice-mass is a mixture of crystals not a homogeneous solid solution will not affect the performance of the ice condenser.

Melting in the ice condenser will occur over a time span of the order of seconds, beginning at the contact between the steam and the ice-mass and progressing inwardly.

The above arguments are greatly simplified, but lead to conservative results. It can therefore be concluded from the above arguments that while some local changes will undoubtedly occur in the quick frozen borated ice, a maldistribution of the solute boron in the ice condenser, of such magnitude as to affect the operation of the condenser as described in the first paragraph, is extremely remote. Furthermore, the microscopically heterogeneous composition of the borated ice-mass will not reflect itself in the ice condenser performance.

2. Sublimation

The other mechanism that affects the long term storage of the ice is sublimation. Sublimation has several effects inside the ice condenser. The geometry of the ice mass changes where sublimation occurs, and the resulting vapor is deposited on a colder surface at another location inside the ice condenser.

In normal cold storage room application, the cooling coil is exposed to the air in the room, and moisture in the air will freeze on the coil. If ice is stored in the room, all of the ice will eventually migrate to the coil (which will be defrosted periodically, draining the water outside the room) through a sublimation-mass transfer mechanism.

To avoid the mechanism, and maintain a constant mass of ice, the ice condenser is provided with double wall insulation. The annular gap between the insulated walls is provided with a heat sink in the form of a flow of cool, dry air that enters and leaves through the insulated panels.

However, a small amount of heat enters the system through the inlet doors, which are not double insulated, and also through the double layer insulation system. The effect of this heat gain on the ice condenser has been examined analytically and experimentally through testing.

An analytical model of the sublimation process has been developed to provide an estimate of the expected sublimation rate as well as identify the significant parameters affecting the sublimation rate. The model developed a relationship identifying the fraction of total heat input which sublimes ice (the rest of the heat raises the temperature of the air, which transports the vapor to the cold surface where it freezes). The sublimation fraction depends on the difference in vapor pressure between warmest and coldest air temperatures within the ice condenser. The sublimation fraction decreases as the ΔT decreases and also as the average ice condenser temperature decreases. For an average temperature of 15°F in the ice condenser compartment, the analytical model predicts a sublimation rate of about 1 percent of the ice mass sublimed per year per ton (12,000 BTU/hr) of heat gain to the ice storage compartment. The final heat gain calculations identified a heat gain into the ice storage compartment of 1 to 1.5 tons, most of which will enter the compartment through the doors. For the purposes of this report, it is assumed that the reference heat gain for the plant is 1 ton, and therefore, the calculated reference sublimation rate would be 1 percent of the ice weight per year and provides a basis of comparison with test results.

3. Chemical Additives

Sodium tetraborate will be used as a chemical additive to the ice in the plant. The boron is needed for recirculation through the core and the tetraborate is used for iodine removal and containment sump pH control. Boron or sodium tetraborate was also added to the ice used in the long-term storage tests. Chemical analyses were performed before and after certain storage tests to identify any change in boron concentration in the ice. These chemical tests showed that the boron concentration did not significantly change during long-term ice storage. Also, the tests proved that the boron is not transferred with the ice during the sublimation process. It remains as a residue at the original point of sublimation.

Samples of flake ice with sodium tetraborate additive were laced in the cold storage room at Waltz Mill on August 29, 1969, and chemical analyses were made of the ice used in the test samples. The samples were suitably isolated so that sublimation would be minimized or prevented. The tests were terminated on June 19, 1970, approximately 9-1/2 months after initiation, and chemical analyses were again made of several samples taken from different locations in the test section. These analyses indicated that there was essentially no change in the boron concentration from beginning to end of testing, confirming the diffusion theory discussed in paragraph 1 above.

6.5.15.4 Testing and Inspection

1. General

The ice condenser design consists of 48 foot long columns of ice contained within perforated metal baskets.

In the long-term storage of ice, the compression, shear, and creep characteristics are important considerations. Several years of testing at the Waltz Mill facility in these areas of interest has indicated that the ice bed will maintain its geometry for its design life. While the construction of the ice baskets has changed since these tests were performed, the data is still applicable as the basic geometric configuration of the baskets has remained the same, and the same type of ice to be used in the plant was incorporated in the final series of tests. These Waltz Mill tests provide background on the testing that has been done to date, and presented in the next section is a discussion of planned tests that will provide additional information to further evaluate the mechanical performance of ice.

A number of mechanical loading test series have been performed at Waltz Mill to determine compaction, shear, or creep rates in the ice bed. The first series of tests initiated in 1966 used tube ice (hollow cylinders, 1.50 inch O.D. by 0.5 inch I.D. by 2 inch length) produced in a commercial ice machine. The ice used in the above tests was made with no chemical additive, or with boron as a chemical additive to the ice. In some of these tests lead weights were placed on top of the ice samples to simulate the weight of various ice column heights.

The final series of tests initiated in 1969 used flake ice in the same type of baskets to determine the compaction and shear rates of the ice. As the flake ice represents the basis for the configuration used in the ice condenser, only those tests results applicable for this ice form will be discussed.

2. Compaction Tests

Table 6.5.15-1 lists and describes the flake ice compaction tests performed, the duration of the tests, and the resulting compaction after one year of testing for these tests. The results of all of the tests showed that the greatest amount of compaction occurred during the first several months of testing. The amount of compaction varied with the equivalent height of the ice column and depended on the type of ice employed. Figure 6.5.15-2 presents the percent compaction versus time for flake ice test D'. Compaction of flake ice occurs much more rapidly than the other forms of ice due to the smaller and random size of the individual pieces of ice. After the initial year of compaction, the rate of compaction reduces significantly. The rate of compaction reduces almost to zero as the ice density approaches some value close to the density of solid ice. Inspection of the compaction tests indicated no evidence of ice being extruded out through the sides of the baskets.

For these tests the compaction measured is for the bottom section of the ice bed only; the ice above this level (simulated by lead blocks) would be compacted to a lesser extent since it is loaded with less weight. Therefore, the tests results were corrected for the effect of continuously reducing load from bottom to top of the ice column. When this correction was made, the results of the flake ice tests (D',E') suggest that the amount of compaction of an increment in the ice bed varies linearly with the height of the ice bed above the increment, as shown by Figure 6.5.15-3. For flake ice the comparison rate must eventually change, as indicated by the dotted line, as the density of solid ice is approached. Application of this relationship would result in the estimated compaction relationship, shown in Figure 6.5.15-4, for total compaction (in the first year) versus unsupported height of the ice bed. Since the basket provides support for the ice every 6 feet, the compaction of any 6-foot section of the ice bed would be limited to less than 4 inches.

3. Shear Tests

In these tests, ice was loaded into the basket on top of the temporary bottom support which was removed within one or two weeks after loading. The initial series of tests employed tube ice in expanded metal baskets with lead weights added to simulate additional weight of ice. All of the tests experienced an initial settlement within the first two months (after the temporary support was removed). Afterwards, the results show very low creep rates, which appear to be proportional to the weight added. Subsequently it was concluded that each increment of ice in the basket would support its own weight by shear on the adjacent basket walls.

To evaluate this theory with flake ice, additional shear tests (G', H', I') were initiated. In these tests, unsupported ice bed heights of 1 foot, 3 feet, and 5 feet were tested with no lead weights added. In theory, the shear rate should be the same since each foot of ice column had the same shear support.

The results presented in Table 6.5.15-1, confirmed that the shear rates for the three ice bed heights were of similar magnitude for a period of about 6 months. The rate measured was about 1 inch per year and was about 10 times the rate measured in the previous tests with tube ice in expanded metal baskets. From this information it is concluded that the shear capability of flake ice on the sides of the wire baskets is small. However, in the plant design the ice will be supported by the horizontal supports at the bottom and center of each 12-foot section of ice column, so the stability of the ice bed will not depend on the shear forces existing between the ice and the baskets.

6.5.16 References

1. "Standard Format and Content of Safety Analysis Reports for Nuclear Power Plants," Revision 1, Regulatory Staff, USAEC, October 1972.

2. "Test Plans and Results for the Ice Condenser System," WCAP-8110, April 16, 1973.

3. "Test Plans and Results for the Ice Condenser System," WCAP-8110, Supplement 1, April 30, 1973.

4. "Test Plans and Results for the Ice Condenser System," WCAP-8110, Supplement 2, June 19, 1973.

5. "Test Plans and Results for the Ice Condenser System," WCAP-8110, Supplement 3, July 18, 1973.

6. "Test Plans and Results for the Ice Condenser System," WCAP-8110, Supplement 4, November 15, 1973.

7. Allen, H. G. "Analysis and Design of Structural Sandwich Panels," Pergamon Press, London, 1969.

8. Plantema, F. F., "Sandwich Construction," John Wiley, New York, 1966.

9. Raville, M. E., "Deflection and Stress in a Uniformly Loaded Simply Supported Rectangular Sandwich Plate," FPL Report No. 1847, September, 1962.

10. Libove, C. and R. E. Huboka, "Elastic Constants for Corrugated-Core Sandwich Plates," NACA Report No. TN-2289.

11. Timoshenko, S. P., "Theory of Elastic Stability," McGraw-Hill, 1961.

12. Idel'chik, Handbook of Hydraulic Resistance, AECTR 6630, NTIS, Springfield, Va.

13. Nies, N. P. and Hulbert, R. W., Journal of Chemical and Engineering Data, Vol. 12, No. 3, pp. 303-313, 1967.

14. Franks, F., "Water," V. 1, Plenum (1972), Ch. 4.

15. Specification for the Design, Fabrication and Fraction of Structural Steel for Buildings, American Institute of Steel Construction.

16. Donald C. Cook Nuclear Plant, FSAR, American Electric Power Service Corporation, Docket Numbers 50-315 and 50-316.

17. Ice Condenser System Lower Inlet Door Shock Absorber Test Plans and Results, WCAP-8336, May 1974 (Westinghouse NES Proprietary) and WCAP-8110, Supplement 5, May 1974.

18. Final Report-Ice Condenser Full-Scale Tests at the Waltz Mill Facility, WCAP-8282, February 1974 (Westinghouse NES Proprietary), and WCAP-8110, Supplement 6, May 1974.

19. Final Report-Ice Condenser Full-Scale Tests at the Waltz Mill Facility, WCAP-8282, Addendum 1, May 1974, (Westinghouse NES Proprietary) and WCAP-8110, Supplement 7, May 1974.

20. Stress and Structural Analysis and Testing of Ice Baskets, WCAP-8304, (Westinghouse NES Proprietary) and WCAP-8110, Supplement 8, May 1974.

21. Ice Fallout From Seismic Testing of Fused Ice Basket, WCAP-8110, Supplement 9-A, May 1974.

22. Static Testing of Production Ice Baskets, WCAP-8110, Supplement 10, September 1974.

23. Probability and Statistics for Engineers, I. Miller and E. Freud, Prentice Hall Inc., Englewood Cliffs, New Jersey, 1965.

24. Sampling Techniques (2nd ed.), W. G. Cochran, John Wiley and Sons, Inc., New York, 1963.

25. Supplemental Safety Assessment/Safety Evaluation of Design Change Notice M08924C (RIMS B39930622003) (Applicable to both Units 1 and 2).

26. Westinghouse Letter TVA-8734, “Westinghouse Evaluation of TVA Special Test SQ-STEAR-INST-83-12 for Ice Basket Integrity with the Top Cruciform Removed” (RIMS NEB 830912 607).

27. WCAP-10986, “Ice Condenser Drain Test Results, Data Analysis and Development of Drain Flow Models for the LOTIC-III Ice Condenser Code” dated November 1985 (RIMS B45860414354).

28. WCAP-12810, “Sequoyah Main Steam Line Break Containment Integrity Analysis with Superheat” dated December 1990 (RIMS B88911122002).

29. TS Change 00-01, NRC-SER for Amendment Nos. 267 and 258. The TS Change was Approved March 22, 2001.

Table 6.5.2-1 (Sheet 1)

WALL PANEL DESIGN LOADS (1)

A. Service Loads

Weight of Panels on Containment and End Wall (58' length)	100 lbs/linear ft.
Weight of Panels on Crane Wall (48' length)	85 lbs/linear ft.
Pressure (Wall panel internal)	0 to 0.5 psig

B. 1/2 SSE Lattice Frame Column Loads(2)
(Maximum at 57' elevation)

Radial	± 11,500 lbs.
Tangential	± 8,600 lbs.
Radial plus Tangential	+ 7,100 lbs.
Radial plus Tangential	- 7,100 lbs.

C. SSE Lattice Frame Column Loads(2)
(Maximum at 57' elevation)

Radial	± 13,426 lbs.
Tangential	± 9,590 lbs.
Radial plus Tangential	+ 8,148 lbs/ea.
Radial plus Tangential	- 8,148 lbs/ea.

D. DBA(2)
Maximum Lattice Frame Column Load and Pressure at 15' elevation)

Tangential	± 8,259 lbs.
Pressure (D.L.F. = 1.5; M = 1.4)(Note 3)	18.7 psig

E. SSE plus DBA(2)

15' Elevation

(1)	Tangential	+ 14,810 lbs.
	Pressure (D.L.F. = 1.5; M = 1.4)	18.7 psig
(2)	Tangential	± 14,810 lbs.
	Pressure (D.L.F. = 1.0; M = 1.0)	9.0 psig
(3)	Radial plus Tangential	+ 8,525 lbs/ea.
	Pressure (D.L.F. = 1.5; M = 1.4)	18.7 psig
(4)	Radial plus Tangential	- 8,525 lbs/ea.
	Pressure (D.L.F. = 1.5; M =1.4)	18.7 psig

Table 6.5.2-1 (Sheet 2)

WALL PANEL DESIGN LOADS (1)

21' Elevation

(1)	Radial	± 12,332 lbs.
	Pressure (D.L.F. = 1.5; M = 1.4)	18.7 psig
(2)	Radial	± 12,332 lbs.
	Pressure (D.L.F. = 1.0; M = 1.0)	9.0 psig

57' Elevation

(1)	Radial	± 13,340 lbs.
	Pressure (D.L.F. = 1.0; M = 1.0)	.84 psig
(2)	Tangential	± 13,426 lbs.
	Pressure (D.L.F. = 1.0; M = 1.0)	.84 psig
(3)	Radial plus Tangential	+ 7,126 lbs/ea.
	Pressure (D.L.F. = 1.0; M = 1.0)	.84 psig
(4)	Radial plus Tangential	- 7,126 lbs/ea.
	Pressure (D.L.F. = 1.0; M = 1.0)	.84 psig

(1) Design pressure loads, as stated, are applied uniformly to the wall panel transverse beams. Radial and Tangential loads are applied at lattice frame column to wall panel attachment. These are maximum load combinations.

(2) Vertical seismic loads (0.35 and 0.55 times dead load for 1/2 SSE and SSE, respectively) and vertical Design Basis Accident loads are neglected in the analysis because they are small in comparison to the radial and tangential loads.

(3) D.L.F. = Dynamic Load Factor. M = Margin

TABLE 6.5.2-2

SUMMARY OF RESULTS FOR WALL PANELS

DBA Pressure

Item	Safety Factor	Basis
Maximum general membrane (located at center of face sheet, point A in Figure 6.5.2-2)	2.7	Allowable from Subsection 3.8.3
Maximum local membrane stress (located in middle of the face between legs of corrugated core, point B in Figure 6.5.2-3)	1.7	Allowable from Subsection 3.8.3
Load on Each Leg of Corrugated core	7.5	Critical load by Formula of Reference[11]

TABLE 6.5.2-3

WALL PANEL TRANSVERSE BEAM STRESS SUMMARY

Loading Conditions	D + 1/2 SSE	D + SSE	D + SSE + DBA
Criteria 3.8.3	1.0S	1.33S	1.65S
Bending Allowable Stress (Psi)	33,000	43,890	54,450
Max. Calculated Stress (Psi) Member No/Stress	209/16,083	209/18,095	251/17,857
Interaction Factor ≤ 1.0			
Calculated; Member No/value	209/0.550	209/0.465	251/0.413

TABLE 6.5.3-1

LATTICE FRAME LOADS
HORIZONTAL 1/2 SAFE SHUTDOWN EARTHQUAKE [2]

Elevation above Floor Slab, ft	1/2 SSE at 0° and 90° from Reference Direction of Excitation (kips) 0°		90°		1/2 SSE 45°[1] From Reference Direction of Excitation (kips)	
	T_{avg}	Radial	T_{avg}	Radial	Tangential	Radial
15	5.9	0	0	7.9	4.9	4.9
21	5.9	0	0	7.9	4.9	4.9
27	6.2	0	0	8.3	5.1	5.1
33	6.6	0	0	8.7	5.4	5.4
39	7.0	0	0	9.4	5.8	5.8
45	7.6	0	0	10.2	6.3	6.3
51	8.2	0	0	10.9	6.8	6.8
57	8.6	0	0	11.5	7.1	7.1

(1) $\left(\frac{\text{Tang + Radial}}{2}\right)$ Cos 45°

(2) Refer to Figure 6.5.3-1 for direction of excitation.

TABLE 6.5.3-2

LOCAL SEISMIC LOADS ON LATTICE FRAMES
DUE TO SINGLE ICE BASKET

Elevation above Floor Slab, ft	Ice Basket Load, lbs
15	459
21	461
27	482
33	510
39	547
45	593
51	638
57	671

TABLE 6.5.3-3

ICE CONDENSER LATTICE FRAME LOADS [1]

BLOWDOWN PRESSURE LOADS FOR SAFE SHUTDOWN EARTHQUAKE (SSE)
AND DESIGN BASIS ACCIDENT (DBA)

Elevation Above Floor Slab, ft.	SEISMIC LOAD (LBS.) SSE Tangential	SSE Radial	Ice Column Horizontal-Tangential lbs/ft	Ice Column Horizontal Radial lbs/ft	Lattice Frame[2] -Horizontal-Tangential lbs.	Lattice Frame[2] Horizontal Radial lbs.	TOTAL -SSE & DBA, LBS. Tangential	Radial
15	6550	9170	23.8	17.9	8259	6211	14,810	15,381
21	6590	9226	22.5	8.95	7808	3106	14,400	12,332
27	6880	9632	19.8	0	6871	0	13,750	9,632
33	7280	10,192	18.5	0	6420	0	13,700	10,192
39	7810	10,934	16.8	0	5830	0	13,640	10,934
45	8470	11,858	14.0	0	4858	0	13,330	11,858
51	9110	12,754	11.8	0	4095	0	13,210	12,754
57	9590	13,426	10.8	0	3748	0	13,340	13,426

NOTE: 1. A design margin (M) of 40% and a dynamic load factor (DLF) of 1.53 are used where applicable.
2. (lb./ft.) x (DLF) x (M) x (6) x (27) -- There are 27 baskets per lattice frame, and blowdown pressure loads are applied over 6 ft. of each basket.

TABLE 6.5.3-4

VERTICAL DBA LOADS
ON LATTICE FRAMES

Elevation above Floor Slab, ft.	Vertical Blowdown Drag Forces, lbs/lattice frame	Vertical Load lbs/column Crane Side	Vertical Load lbs/column Cont. Side
15	7572	3030	4543
21	7572	3030	4543
27	3726	1490	2236
33	1754	1490	2236
39	1754	702	1052
45	1619	648	970
51	1619	648	970
57	1792	716	1075
TOTALS:	27,408	10,966	16,443

Note: A design margin of 40% and a dynamic load factor of 1.10 should be used with the above values.

TABLE 6.5.3-5

VERTICAL FRICTION LOADS
ON LATTICE FRAMES

El Above Floor Slab	(From Table 6.5.3-3) Horiz. Tang. DBA lb/Lattice Frame	Vert. Friction Load μ = .5 lb/lattice Frame	Vertical Friction lb/Crane Col. (40%)	Vertical Friction lb/Contain. Col. (60%)
15	8259	4129	1652	2477
21	7808	3904	1562	2342
27	6871	3435	1374	2061
33	6420	3210	1284	1926
39	5830	2915	1166	1749
45	4858	2429	972	1457
51	4095	2047	819	1228
57	3748	1874	750	1124
TOTALS	47,889	23,945	9,578	14,367

NOTE: A design margin of 40% and a dynamic load factor of 1.53 is used in the above values.

TABLE 6.5.3-6

MAXIMUM LATTICE FRAME STRESS SUMMARY

Criteria	D+1/2 SSE S per AISC-69	D+DBA 1.33S	D+SSE 1.33S	D+DB+SSE 1.33S
Bending Allowable Stress** (psi)	37,500	49,875	49,875	61,875
Max Calculated Stress (psi)				
Member No./stress	71/33,360	71/25,640	71/36,850	71/49,330
	63/30,590	72/22,900	63/33,770	63/43,720
	79/28,360	80/22,300	79/31,320	72/42,870
	72/28,160	63/22,040	72/31,110	79/42,160
	78/27,780	79/22,030	78/30,690	75/41,600
Interaction Factor:				
Calculated Member No/value:	71/.92	71/.81	71/1.02	78/1.46
Allowable:	1.0	1.33*	1.33*	1.65*

Note: The interaction factor considers the combined effect of vertical and horizontal stresses. It is the product of the increase in allowable stresses and the limit for S per AISC-69.

** ASTM-A441 not normalized. Yield Stress = 50,000 psi

TABLE 6.5.3-7

SUMMARY OF FATIGUE ANALYSIS [1]
FOR LATTICE FRAMES

Member Number/ Joint Number	Calculated Stress range, psi (in welded location)	Allowable Stress range [2], psi
127/67	2000	22,500
128/68	2300	22,500
130/130	2000	22,500
131/72	2200	22,500
133/92	2200	22,500
134/73	2300	22,500

(1) - Based on 400 1/2 SSE cycles.
(2) - AISC-69 specification, Appendix B.

TABLE 6.5.4-1

ICE BASKET LOAD SUMMARY

MINIMUM TEST LOADS** (LBS.)

Elevation* (ft.)	Case I D + 1/2 SSE H	Case I D + 1/2 SSE V	Case II D + DBA H	Case II D + DBA V	Case III D + SSE H	Case III D + SSE V	Case IV D+ SSE+DBA H	Case IV D+ SSE+DBA V
0	769	4666	265	-2527	749	4056	840	-3650
6	1431	4242	742	-2209	1314	3549	2000	3193
12	1760	3712	549	-1895	1617	3042	2079	-2738
28	2412	3193	416	-1579	2022	2535	2473	-2282
24	2547	2495	445	-1191	2022	2029	2619	-1825
30	2551	1872	426	- 998	2022	1520	2651	-1369
36	2201	1167	420	- 631	2022	1014	2200	- 911
42	2091	582	451	- 316	1941	506	2142	- 456
48	1980	0	142	0	1881	0	1806	0

* Above lower support structure.

** Minimum Test Loads furnished are envelope test loads covering all domestic Ice Condenser Plant ice baskets, and are conservative with respect to Sequoyah.

Note: Negative Vertical Loads constitute a tensile load on the ice basket.

TABLE 6.5.4-2

ICE BASKET LOAD SUMMARY
BASIC DESIGN LOADS (LBS.)

Elevation*	D		1/2 SSE		SSE		DBA	
(ft.)	H	V	H	V	H	V	H	V
0	0	1795	407	628	482	987	111	-2544
6	0	1571	385	549	385	864	215	-2226
12	0	1346	441	471	441	740	191	-1908
18	0	1122	497	392	497	617	165	-1590
24	0	898	553	314	553	494	149	-1272
30	0	673	532	235	532	370	141	- 954
36	0	449	504	157	504	247	143	- 636
42	0	224	476	78	476	123	134	- 318
48	0	0	560	0	560	0	61	0

* Above lower support structure.

Note: Negative Vertical loads constitute a tensile load on the ice basket.

TABLE 6.5.4-3

SUMMARY OF STRESSES IN BASKET DUE TO DESIGN LOADS

Elevation from Lower Support Structure, ft	Design Load, lb[1] H	Design Load, lb[1] V	Maximum Stress, psi	Allowable Stresses, psi
0	[3] 304	3029	11,508	19,950[2]
12	[3] 650	2271	17,100	19,950[2]
24	[3] 761	1514	17,976	19,950[2]
36	[3] 835	378	17,435	19,950[2]
12	[4] 1017	-2003	23,988	24,750[5]

Notes:

(1) With 10% margin

(2) Allowable stress = .6 x S_y x 1.33 per 6.2.2.16

(3) Design load, D + SSE

(4) Design load, D + SSE + DBA, 10% margin on weight, 40% margin on pressure and 1.5 dynamic load factor.

(5) Allowable stress = .6 x S_y x 1.65

TABLE 6.5.4-4

ICE BASKET MATERIAL MINIMUM YIELD STRESS

Item	Material	Minimum Yield Stress (KSI)
Clevis Pin and U-Bolts	SAE-J 429 Grade 8	130
Basket End Coupling and Stiffener	ASTM A-622	32
Nut	AISI-431	125 (Min. Shear)
Mounting Bracket Assembly	ASTM A-588 Grade A	50
Plate	ASTM A-36	36
Grid Bars	ASTM A-570-GR.B	
Wire Mesh	ASTM A-641	40
Perforated Basket	ASTM A-569	25
Coupling Screw C-1022 Minimum Thru Hardness RC-32		Minimum Tensile Strength is 140,000 psi based on hardness.

TABLE 6.5.4-5

ALLOWABLE STRESS LIMITS (D + 1/2 SSE)
FOR ICE BASKET MATERIALS

ALLOWABLE LIMITS

Material	Specified Minimum Yield (KSI)	Tension F_t=0.6Fy (KSI)	Shear F_v=0.4Fy (KSI)	Bearing F_p=0.9Fy (KSI)	Bending F_b=0.66Fy (KSI)
Carbon Steel 130 KSI Minimum Yield	130	78	52	117	85.8
ASTM A588	50	30	20	45	33
ASTM, A570 Grade B	30	18	12	27	19.8
ASTM A622	32	19.2	12.8	28.8	21.1
ASTM A36	36	21.6	14.4	32.4	23.8
ASTM A641	40	24	16	36	26.4
ASTM A569	25	15	10	22.5	16.5

TABLE 6.5.4-6

ALLOWABLE STRESS LIMITS (D+SSE), (D+DBA)
FOR ICE BASKET MATERIALS

ALLOWABLE LIMITS

Material	Specified Minimum Yield (KSI)	Tension $S_t=1.33F_t$ (KSI)	Shear $S_v=1.33F_v$ (KSI)	Bearing $S_p=1.33F_p$ (KSI)	Bending $S_b=1.33F_b$ (KSI)
Carbon Steel 130 KSI Minimum	130	103.7	69.2	155.6	114.1
ASTM-A588	50	39.9	26.6	59.8	43.9
ASTM-A570 Grade B	30	23.9	16.0	35.9	26.3
ASTM-A622	32	25.5	17.0	38.3	28.1
ASTM-A36	36	28.7	19.1	43.0	31.6
ASTM-A641	40	31.9	21.3	47.9	35.1
ASTM-A569	25	19.95	13.3	29.92	21.95

TABLE 6.5.4-7

ALLOWABLE STRESS LIMITS (D+SSE+DBA)
FOR ICE BASKET MATERIALS

ALLOWABLE LIMITS

Material	Specified Minimum Yield (KSI)	Tension S_t=1.65F_t (KSI)	Shear S_v=1.65F_v (KSI)	Bearing S_p=1.65Fp (KSI)	Bending S_b=1.65F_b (KSI)
Carbon Steel 130 KSI Minimum	130	128.7	85.8	193.1	141.6
ASTM-A588	50	49.5	33.0	74.2	54.4
ASTM-A570 Grade B	30	29.7	19.8	44.6	32.7
ASTM-A622	32	31.7	21.1	47.5	34.8
ASTM-A36	36	35.6	23.8	53.5	39.2
ASTM-A641	40	39.6	26.4	59.9	43.6
ASTM-A569	25	24.75	16.5	37.13	27.23

Table 6.5.4-8

ICE BASKET CLEVIS PIN STRESS SUMMARY

(Parenthetical values are stress allowables.)

Load Case No.	Horiz. Load H (LBF)	Vert. Load V (LBF)	Pin Bending Stress f_b (10^3 psi)	Pin Shear Stress f_v (10^3 psi)	Pin-Lug Bearing Stress f_p 10^3 psi
Case I	251	2638	67.3 (97.5)	13.5 (52.0)	10.6 (45.0)
Case II	300	-1596	41.2 (129.7)	8.3 (69.2)	6.5 (59.8)
Case III	251	3028	77.1 (129.7)	15.5 (69.2)	12.1 (59.8)
Case IV	551	-2671	69.3 (160.9)	13.9 (85.8)	10.9 (74.2)

TABLE 6-5.4-9

ICE BASKET MOUNTING BRACKET ASSEMBLY

STRESS SUMMARY

(Parenthetical values are stress allowables.)

Load Case No.	Horiz. Load H (LBF)	Vert. Load V (LBF)	Load Case Factor N	Point 1 Interaction Formula Value X*	Washer Bearing Stress f_p (Psi x 10^3)	Sheer Tear Out Stress f_v (Psi x 10^3)	Weld Shear Stress f_v (Psi x 10^3)
I	251	2638	1.0	0.90	34.6	-	7.8
					(45.0)*	(20.0)	(20.0)
II	300	-1596	1.33	0.57	36.6	5.3	5.4
					(59.8)	(26.6)	(26.6)
III	251	3028	1.33	1.02	34.6	-	8.7
					(59.8)	(26.6)	(26.6)
IV	551	-2671	1.65	0.96	53.0	8.9	9.2
					(74.2)	(33.0)	(33.0)

*X $\leq$ N indicates safe condition

TABLE 6.5.4-10

ICE BASKET PLATE STRESS SUMMARY

Load Case No.	Horiz. Load H (LBF)	Vert. Load V (LBF)	Load Case Factor N	Point 1 Interaction Formula Value* X	Point 2 Interaction Formula Value* X
I	251	2638	1.0	0.25	0.27
II	300	-1596	1.33	0.23	0.29
III	251	3028	1.33	0.28	0.27
IV	551	-2671	1.65	0.42	0.53

*X $\leq$ N indicates safe condition.

TABLE 6.5.4-11

ICE BASKET U-BOLT STRESS SUMMARY

(Parenthetical Values are Stress Allowables)

Load Case No.	Horiz. Load H (LBF)	Vert. Load V (LBF)	Tensile Stress f_b (10^3 psi)
I	251	2638	42.8
			(78.0)
II	300	-1596	55.1
			(103.7)
III	251	3028	42.8
			(103.7)
IV	551	-2671	65.6
			(128.7)

TABLE 6.5.4-12
ICE BASKET - BASKET END STRESS SUMMARY

Load Case No.	Horiz. Load H (LBF)	Vert. Load V (LBF)	Load Case Factor N	Point 1 Interaction Formula Value X*	Point 2 Interaction Formula Value X*
I	251	2638	1.0	0.74	0.97
II	300	1596	1.33	0.85	0.63
III	251	3028	1.33	0.76	1.10
IV	551	2671	1.65	0.56	1.08

*X ≤ N indicates safe condition.

TABLE 6.5.4-13

ICE BASKET COUPLING SCREW - STRESS SUMMARY
BOTTOM COUPLING ELEVATION
(3 inches above lower support structure)

(Parenthetical Values are Stress Allowables)

Load Case No.	Horiz. Load H (lbs.)	Vert. Load V (lbs.)	Screw Bending Stress f_b (ksi)	Screw Shear Stress f_v (ksi)	Basket Bearing Stress f_p (Ksi)	Basket Tear-Out Stress f_{vt} (ksi)
Case I			65.8	12.0	16.8	4.3
	251	2638	(84.0)	(33.6)	(28.8)	(12.8)
Case II			43.1	7.8	11.0	2.8
	300	-1596	(111.7)	(44.7)	(38.3)	(17.0)
Case III			74.7	13.6	19.1	4.8
	251	3028	(111.7)	(44.7)	(38.3)	(17.0)
Case IV			73.1	13.3	18.7	4.7
	551	-2671	(138.6)	(55.4)	(47.5)	(21.1)

TABLE 6.5.4-14

ICE BASKET COUPLING SCREW - STRESS SUMMARY
12 FOOT ELEVATION
(Above top of lower support structure)

(Parenthetical Values are Stress Allowables)

Load Case No.	Horiz. Load H (lbs.)	Vert. Load V (lbs.)	Screw Bending Stress f_b (ksi)	Screw Shear Stress f_v (ksi)	Basket Bearing Stress f_p (Ksi)	Basket Tear-Out Stress f_{vt} (ksi)
Case I			81.8	14.9	20.9	5.3
	818	1977	(84.0)	(33.6)	(28.8)	(12.8)
Case II			40.2	7.3	10.3	2.6
	289	-1198	(111.7)	(44.7)	(38.3)	(17.0)
Case III			88.5	16.1	22.6	5.7
	818	2271	(111.7)	(44.7)	(38.3)	(17.0)
Case IV			95.3	17.4	24.4	6.2
	1108	-2004	(138.6)	(55.4)	(47.5)	(21.1)

TABLE 6.5.4-15

ICE BASKET COUPLING SCREW - STRESS SUMMARY
24 FOOT ELEVATION
(Above top of lower support structure)

(Parenthetical Values are Stress Allowables)

Load Case No.	Horiz. Load H (lbs.)	Vert. Load V (lbs.)	Screw Bending Stress f_b (ksi)	Screw Shear Stress f_v (ksi)	Basket Bearing Stress f_p (Ksi)	Basket Tear-Out Stress f_{vt} (ksi)
Case I			82.1	15.0	21.0	5.3
	1122	1319	(84.0)	(33.6)	(28.8)	(12.8)
Case II			29.0	5.3	7.4	1.9
	233	-799	(111.7)	(44.7)	(38.3)	(17.0)
Case III			86.5	15.8	22.1	5.6
	1122	1513	(111.7)	(44.7)	(38.3)	(17.0)
Case IV			93.2	17.0	23.9	6.0
	1355	-1335	(138.6)	(55.4)	(47.5)	(21.1)

TABLE 6.5.4-16

ICE BASKET COUPLING SCREW - STRESS SUMMARY
36 FOOT ELEVATION
(Above top of lower support structure)

(Parenthetical Values are Stress Allowables)

Load Case No.	Horiz. Load H (lbs.)	Vert. Load V (lbs.)	Screw Bending Stress f_b (ksi)	Screw Shear Stress f_v (ksi)	Basket Bearing Stress f_p (Ksi)	Basket Tear-Out Stress f_{vt} (ksi)
Case I			66.9	12.2	17.1	4.32
	1161	658	(84.0)	(33.6)	(28.8)	(12.8)
Case II			16.4	3.0	4.2	1.1
	176	-371	(111.7)	(44.7)	(38.3)	(17.0)
Case III			69.1	12.6	17.7	4.5
	1161	757	(111.7)	(44.7)	(38.3)	(17.0)
Case IV			74.4	13.6	19.0	4.8
	1338	-639	(138.6)	(55.4)	(47.5)	(21.1)

TABLE 6.5.5-1

CRANE AND RAIL ASSEMBLY DESIGN LOADS

A. Normal Operation

Crane Weight (excluding rails)	7200 lbs
Maximum Capacity During Plant Erection	6000 lbs (each of two cranes)
Maximum Capacity	6000 lbs (one crane)
Maximum Load Expected	2400 lbs

Note: Seismic loading is not considered as crane is parked outside of Ice Condenser section during normal operation.

TABLE 6.5.6-1 (Sheet 1)

REFRIGERATION SYSTEM PARAMETERS

1.0 General - per twin unit plant

Cooling Water Temperature, maximum design	95°F
Number of ice condenser units	2

2.0 Refrigeration - per twin unit plant

2.1 Glycol chilling machines - 5 dual packages installed

Refrigeration capacity per chiller (half pkg), nominal	6 at 25 tons* / 4 at 25 tons**
Total plant capacity, 5 x 2 x 25	250 tons
Glycol flow per evaporator, normal	≅127 gpm
Glycol flow per evaporator at max. ΔP	200 gpm
Glycol pressure, maximum design	150 psig
Pressure drop through evaporator, normal	16 feet
Maximum allowable ΔP through evaporator	17 psig
Glycol entering temperature, nominal	2°F
Glycol exit temperature, nominal	-5°F (25 ton* units) / -5.2°F (25 ton** units)
Cooling water flow per condenser, normal	110 gpm
Cooling water pressure, maximum design	150 psig
Pressure drop through condenser	3.6 feet
Approximate refrigerant charge per chiller	150 lb (25 ton* units) / 150 lb (25 ton** units)
Refrigerant	R-502 (25 ton* units) / R-404A (25 ton** units)

2.2 Glycol circulation pumps - 6 installed 4-Required

Design flow per pump	190 gpm
Normal flow per containment, 2 x 190	380 gpm
TDH at design flow	220 feet
Shut-off head	250 feet
NPSH required at design point	9 feet

2.3 Pressure relief valves

2.3.1 External headers 2 - installed

Set pressure (for thermal expansion of glycol)	150 psig
Capacity at set pressure (each)	2.9 gpm

2.3.2 Floor cooling system header (2 per unit) Set pressure 180 psig

2.4 Refrigeration medium (glycol) - UCAR Thermofluid 17 or equal

Concentration, ethylene glycol in water-50 weight % or 47.8 volume %

At temperature:	-10°F	-5°F	0°F	100°F
Specific gravity	1.084	1.083	1.082	1.056
Absolute viscosity, centipoise	29.5	25.0	20.5	2.3
Kinematic viscosity, centistokes	27.2	23.1	18.9	2.18

*Nominal refrigeration rating of original chillers based on 85°F RCW Condenser inlet temperature.
**Nominal refrigeration rating of replacement chillers based on 88°F RCW Condenser inlet temperature.

TABLE 6.5.6-1 (Sheet 2)

REFRIGERATION SYSTEM PARAMETERS

3.0 Ice Condenser - per one containment unit

3.1 Ice Bed

Amount of ice initially stored per unit, nominal, lbs	2.98×10^6
Minimum amount of ice in storage, lbs	1.930×10^6
Estimated ice displacement per year	1-2%
Ice melt during maximum LOCA, calculated, approx.	10^6 lbs
Temperature of ice & static air, (optimum 19°F)	18-20°F
Assumed ambient temperature (external)	100°F
Pressure at lower doors due to cold head, nominal	0.68 psf
Inlet door opening pressure	0.68 psf

3.2 Air Handling Units - 30 dual packages installed per containment

Refrigeration requirements per containment, calculated nominal	51.5 tons
Gross capacity per dual package rated	2.5 tons
Glycol entering temperature, nominal	-5°F
Glycol exit temperature, approx.	0°F
Glycol flow per air handler (1/2 package)	6 gpm
Total glycol flow, 30x2x6	360 gpm
Glycol pressure drop, estimated	50 feet
Air flow per single air handler (1/2 package) (nominal)	1,200 cfm
Total cooling air flow, 30x2x1200	72,000 scfm
Air blower head	2" H_20
Air entering temperature, estimated	19°F
Air exit temperature, nominal	10°F

TABLE 6.5.9-1

LOWER INLET DOOR DESIGN PARAMETERS AND LOADS

A. Normal Operation	
Temperature, Lower Compartment, ^{o}F	120 Maximum
Temperature, Ice Bed, ^{o}F	10 Minimum
Pressure across Doors, psf	1.0 Nominal
B. Seismic	
Response of Crane Wall at Door Elevation	
Horizontal, 1/2 SSE,g	0.015
Vertical, 1/2 SSE, g	0.087
Horizontal, SSE,g	0.27
Vertical, SSE g	0.18
C. Accident Conditions	
Temperature, Lower Compartments, ^{o}F	250 Maximum
Pressure across Doors as shown in Figure 6.5.9-7. For design purposes a 40% margin shall be applied to differential pressure given in this figure.	

TABLE 6.5.10-1 (Sheet 1)

DESIGN LOADS THREE PIER LOWER SUPPORT STRUCTURE
(See Figure 6.5.10-4)

			LOAD DESCRIPTION	BASIC VALUE
I.			Gravity	
			Structural and Ice Weight (2000 lbs/Ice Basket)	1.0 g
			Wall Panel Weight (lbs/Lattice Frame Bay*)	4000
			Lattice Frames (for eight/Lattice Frame Bay) in lbs.	9600
			Intermediate Deck (lbs/LSS** Bay)	2200
			Lattice Frame Colums each in lbs.	989
II.			Thermal Loads	
			Normal Operating	70°F to 10°F
			DBA Thermal Loading	70°F to 250°F
III.	(A)		Seismic Vertical SSE	
			Vertical Seismic Load	0.55 g
III.	(B)		Seismic Vertical 1/2 SEE	
			Vertical Seismic Load	0.35 g
IV.	(A)		Radial Horizontal SSE Seismic	
			Radial Direction - Structural Acceleration	0.37 g
			Seismic Load on Ice Basket (lbs/Lattice Frame Bay)	13000
IV.	(B)		Radial 1/2 SSE Seismic	
			Radial Direction Structural Acceleration	0.24 g
			Seismic Ice Basket Loads (lbs/Lattice Frame Bay)	11000
V.	(A)		Tangential Horizontal SSE Seismic	
			Tangential Direction Structural Acceleration	0.56 g
			Seismic Load on Ice Basket (lbs/Lattice Frame Bay)	9000
V.	(B)		Tangential 1/2 SSE Seismic	
			Tangential Direction Structural Acceleration	0.36 g
			Seismic Load on Ice Basket (lbs/Lattice Frame Bay)	8000

*One Lattice Frame Bay in Plan is equivalent to 1/3 of the Lower Support Structure bay or three radial beams.
**Lower Support Structure.

TABLE 6.5.10-1 (Sheet 2)

DESIGN LOADS THREE PIER LOWER SUPPORT STRUCTURE
(See Figure 6.5.10-4)

		LOAD DESCRIPTION	BASIC VALUE
VI.	(A)	Vertical Blowdown	
		Drag on Inner Radial Beam (kips/ft)	0.0567
		Drag on Outer Radial Beam (kips/ft)	0.0885
		Drag on Ice Basket (kips/Basket)	2.354
		Drag on Horizontal Platform Inner & Outer Bracking (kips/LSS Bay)	2.192
		Drag on Lattice Frame - Eight Frames (kips/LSS Bay)	31.727
		Drag on Intermediate Deck (kips/LSS Bay)	116
		Drag Upward on Outer Circumferential Beam (kips/ft)	.758
VI.	(B)	Horizontal Blowdown	
		Horizontal Load on Middle Circumferential Beam (kips/LSS Bay) at 45° Angle	31.114
		Floor Turning Vane on Middle Column (kips/LSS Bay)	9.911
		Upper Turning Vanes each (kips/LSS Bay)	15.221
		Slotted Plate (kips/LSS Bay)	36.391
		Outer Circumferential Beam Load (kips/ft)	1.728
		Radial Load on Ice Basket (kips/Basket)	0.054
VI.	(C)	Impact Loading for Inner Portal	
		Tangential (kips/Column Line)	60
		Radial (kips/Column Line)	48.2
VI.	(D)	Tangential Blowdown Force	
		Tangential Drag Force (kips/Basket)	.071

TABLE 6.5.10-2 (Sheet 1)

SUMMARY OF STRESSES MAJOR STRUCTURAL COMPONENTS LOWER SUPPORT STRUCTURE ICE CONDENSER

Definition of Terms

M_y = Moment about local y axis

M_z = Moment about local z axis

C_y = Distance from local y neutral axis to extreme fiber

C_z = Distance from local z neutral axis to extreme fiber

I_{yy} = Moment of inertia about local y axis

I_{zz} = Moment of inertia about local z axis

$$\sigma_y = \frac{M_z c_y}{I_{zz}} \pm \sigma_{axial}$$

$$\sigma_z = \frac{M_y c_z}{I_{yy}} \pm \sigma_{axial}$$

$$\sigma_{max} = \frac{M_z c_y}{I_{zz}} \pm \frac{M_y c_z}{I_{yy}} \pm \sigma_{axial}$$

$\sigma_{max}, \sigma_{min}, Tau_{max}$ = Maximum principal stresses through the plate thickness

TABLE 6.5.10-2 (Sheet 2)

COLUMN STRESSES
(ALL STRESSES IN KSI)

	Case 1. Maximum Up Force				Case 2. Maximum Down Force			
NODES	σ Axial	σ Y	σ z	σ Max	σ Axial	σ Y	σ z	σ Max
LINE 1 INNER								
49-50	4.6	6.6	6.1	8.1	0.6	2.7	4.5	5.3
50-51	3.7	5.8	4.3	6.4	0.2	2.4	1.1	2.8
51-52	3.3	5.3	3.5	5.5	-0.2	-2.3	-0.7	-2.8
52-53	3.2	4.8	3.7	5.1	-0.7	-2.3	-1.4	-2.9
53-54	3.5	4.6	5.5	5.6	-1.1	-2.0	-1.7	-2.0
MIDDLE								
29-30	0.4	1.2	1.5	2.0	-5.4	-6.1	-7.8	-8.2
30-31	0.8	2.0	1.4	2.6	-4.4	-5.7	-6.6	-7.8
31-32	1.0	2.7	1.9	3.5	-3.0	-4.7	-3.9	-5.5
32-33	1.6	3.2	2.5	3.4	-2.0	-3.6	-2.3	-3.9
33-34	2.4	3.2	5.9	6.1	-2.0	-2.8	-2.4	-2.9
OUTER								
9-10	8.4	15.9	16.4	21.9	-0.6	-8.1	-5.7	-11.2
10-11	8.4	13.9	16.4	21.9	-0.6	-5.6	-5.6	-11.1
11-12	8.4	11.3	15.4	18.3	-0.6	-3.5	-2.8	- 4.9
12-13	8.4	8.6	14.4	14.4	-0.6	-0.8	-2.8	- 3.0
LINE 2 INNER								
349-350	8.8	10.8	12.8	14.1	4.8	6.7	11.7	12.5
350-351	7.0	9.1	8.0	10.1	3.5	5.5	4.6	6.4
351-352	5.7	7.7	7.1	8.8	2.2	4.1	3.7	5.4
352-353	4.7	6.3	5.9	7.5	0.8	2.5	2.3	4.0
353-354	4.1	5.2	5.2	6.0	-0.5	-1.6	- 2.1	- 2.6
MIDDLE								
329-330	-4.9	-5.6	-7.2	-7.7	-10.7	-11.5	-16.5	-16.9
330-331	-3.3	-4.4	-6.9	-8.1	-8.5	-9.6	-13.6	-14.7
331-332	-1.2	-2.6	-3.8	-5.3	-5.2	-5.2	-6.7	9.3
332-333	0.5	1.8	2.4	3.5	-3.1	-4.5	-4.4	-5.7
333-334	1.8	2.5	6.9	7.1	-2.5	-3.2	-3.6	-4.3
OUTER								
309-310	5.0	5.4	13.4	13.8	-4.0	-4.4	-9.4	-9.8
310-311	5.0	5.4	13.4	13.8	-4.0	-4.4	-9.3	-9.7
311-312	5.0	6.0	11.8	12.0	-3.9	-4.9	-6.9	-7.9
312-31	5.0	6.1	10.6	11.7	-3.9	-5.0	-6.9	-7.9

TABLE 6.5.10-2 (Sheet 3)

CIRCUMFERENTIAL BEAM STRESSES
(ALL STRESSES IN KSI)

	Case 1. Maximum Up Force				Case 2. Maximum Down Force			
NODES	σ Axial	σ Y	σ z	σ Max	σ Axial	σ Y	σ z	σ Max
INNER BEAM								
1000-1001	-0.6	-3.1	-2.9	-5.4	-0.6	-2.4	-1.8	-3.6
1001-1002	-0.8	-3.7	-5.2	-8.2	-0.6	-2.8	-2.6	-4.9
1002-1003	-0.4	-1.2	-7.4	-7.5	-0.1	-1.2	-2.9	-3.9
1003-1004	-0.5	-1.1	-9.8	-10.1	-0.1	-1.6	-3.5	-5.1
1004-1005	-0.5	-1.8	-12.1	-13.4	-0.1	-2.0	-4.2	-6.1
1005-1006	-0.6	-1.7	-14.6	-15.7	-0.1	-2.1	-4.8	-6.5
1006-1007	-0.6	-1.8	-14.6	-15.6	-0.1	-1.8	-4.9	-6.5
1007-1008	-0.6	-1.8	-14.4	-15.5	-0.1	-1.7	-4.9	-6.5
1008-1009	-0.6	-1.2	-14.4	-15.0	-0.1	-1.0	-5.0	-5.8
1009-1010	-0.6	-1.1	-14.4	-14.6	-0.1	-0.8	-5.0	-5.6
1010-1011	-0.6	-1.3	-14.5	-15.2	-0.1	-1.3	-4.9	-6.0
1011-1012	-0.6	-1.6	-14.7	-15.7	-0.1	-1.8	-4.9	-6.3
1012-1013	-0.6	-1.7	-14.7	-15.7	-0.1	-2.2	-4.7	-6.3
1013-1014	-0.6	-2.1	-12.3	-13.8	-0.2	-2.6	-4.1	-6.2
1014-1015	-0.6	-1.8	-10.0	-11.2	-0.2	-2.9	-3.4	-5.8
1015-1016	-0.5	-2.1	-7.7	-9.3	-0.2	-3.0	-2.7	-5.5
1016-1017	-0.6	8.4	5.8	13.6	0.8	9.2	2.2	10.6
1017-1018	-0.7	5.7	3.7	8.6	0.8	6.3	1.4	6.9
MIDDLE BEAM								
1080-1081	-0.4	-4.7	-2.6	-6.9	-0.5	-5.6	-1.8	-6.9
1081-1082	-0.5	-10.9	-4.4	-14.7	-0.4	-11.8	-2.6	-14.0
1082-1083	-0.3	-5.0	-6.2	-10.4	0.3	4.2	2.5	6.0
1083-1084	-0.4	-4.6	-7.5	-10.7	0.3	4.1	3.2	6.3
1084-1085	-0.4	-3.5	-8.8	-10.9	0.3	3.2	3.9	6.1
1085-1086	-0.4	-3.0	-9.6	-11.5	0.3	2.9	4.3	6.5
1086-1087	-0.4	-2.3	-10.4	-11.6	0.3	2.0	4.8	6.0
1087-1088	-0.5	-2.2	-10.6	-12.1	0.3	1.8	5.0	6.3
1088-1089	-0.5	-1.4	-10.9	-11.6	0.3	1.3	5.2	6.2
1089-1090	-0.5	-1.5	-10.9	-11.8	0.3	0.5	5.2	5.4
1090-1091	-0.5	-1.4	-10.5	-11.4	0.3	0.8	5.1	5.6
1091-1092	-0.5	-2.1	-10.1	-11.7	0.2	1.5	5.1	6.3
1092-1093	-0.5	-1.5	-9.2	-10.3	0.2	1.1	4.7	5.6
1093-1094	-0.5	-1.9	-8.3	-9.7	0.2	1.5	4.4	5.7
1094-1095	-0.5	-1.4	-6.9	-7.2	0.2	1.4	3.8	3.9
1095-1096	-0.5	-1.8	-5.5	-5.7	0.1	2.1	3.2	4.4
1096-1097	0.4	23.2	4.7	27.5	0.5	22.2	2.3	24.0
1097-1098	0.5	14.1	2.9	16.5	0.5	13.2	1.5	14.2

TABLE 6.5.10-2 (Sheet 4)

CIRCUMFERENTIAL BEAM STRESSES
(ALL STRESSES IN KSI)

	Case 1. Maximum Up Force				Case 2. Maximum Down Force			
NODES	σ Axial	σ Y	σ z	σ Max	σ Axial	σ Y	σ z	σ Max
OUTER BEAM								
1180-1181	2.9	9.7	7.3	12.0	1.6	6.4	5.4	10.1
1181-1182	2.7	13.8	10.6	21.6	1.6	10.0	6.3	14.7
1182-1183	0.4	4.9	13.0	17.5	-0.1	-3.5	-6.5	-9.9
1183-1184	0.3	6.1	17.9	22.8	-0.1	-3.5	-7.2	10.3
1184-1185	0.3	5.2	23.2	26.9	-0.1	-3.2	-7.9	-10.5
1185-1186	0.1	5.3	27.4	31.1	-0.1	-3.1	-8.4	-10.9
1186-1187	0.0	3.5	28.4	30.7	-0.1	-2.1	-8.5	-10.4
1187-1188	-0.2	-3.2	-29.1	-31.5	-0.2	-1.8	-8.6	-10.2
1188-1189	-0.2	-1.4	-29.7	-30.5	-0.2	-1.3	-8.3	-9.0
1189-1190	-0.3	-0.8	-30.0	-30.5	-0.3	-0.6	-8.2	-8.3
1190-1191	-0.3	-1.0	-30.2	-30.9	-0.3	-1.1	-7.6	-7.9
1191-1192	-0.3	-1.3	-30.2	-31.2	-0.4	-1.0	-7.2	-7.5
1192-1193	-0.3	-1.1	-30.1	-30.9	-0.5	-2.3	-6.3	-7.0
1193-1194	-0.3	-0.6	-26.4	-26.8	-0.6	-2.4	-5.2	-5.9
1194-1195	-0.3	-1.1	-22.1	-22.2	-0.6	-3.8	-3.4	-5.3
1195-1196	-0.2	-1.4	-18.0	-19.2	-0.7	-3.3	-1.8	-4.3
1196-1197	-2.0	-12.9	-14.4	-25.3	-3.1	-16.7	-5.3	-16.7
1197-1198	-1.9	-7.6	-9.9	-15.6	-3.2	-11.0	-8.1	-13.9

TABLE 6.5.10-2 (Sheet 5)

RADIAL BEAM STRESSES
(ALL STRESSES IN KSI)

	Case 1. Maximum Up Force				Case 2. Maximum Down Force			
NODES	σ Axial	σ Y	σ z	σ Max	σ Axial	σ Y	σ z	σ Max
RADIAL BEAM 1								
1001-1002	-3.7	-8.6	-5.7	-10.7	-1.8	-3.9	-4.7	-5.0
1021-1041	-3.8	-6.6	-5.8	-8.5	-1.8	-2.3	-6.9	-7.0
1041-1061	-3.9	-6.6	-12.4	-13.2	-1.9	-2.9	-7.01	-7.6
1061-1081	-3.9	-10.2	-24.5	-30.8	-2.0	-3.0	-6.8	-7.8
1081-1101	-2.6	-8.1	-10.0	-15.6	-0.7	-5.7	-12.4	-17.3
1101-1121	-2.7	-5.7	-7.8	-10.8	-0.8	-3.3	-5.3	-7.8
1121-1141	-2.7	-6.0	-8.4	-11.4	-0.9	-2.1	-5.0	-6.0
1141-1161	-2.7	-6.3	-8.6	-12.2	-0.9	-4.1	-5.7	-8.9
1161-1181	-2.8	-16.1	-9.6	-22.8	-1.1	-4.2	-5.9	9.0
RADIAL BEAM 2								
1023-1023	-0.4	-6.1	-1.6	-7.2	0	-1.3	2.5	2.9
1023-1043	-0.5	-3.2	-3.4	-5.9	-0.1	-0.7	-3.7	-3.7
1043-1063	-0.6	-3.4	-11.5	-12.0	-0.2	-1.3	-3.8	-4.0
1063-1083	-0.6	-6.3	-24.1	-29.8	-0.2	-1.3	-2.6	-3.6
1083-1103	-0.2	-5.5	-17.2	-22.5	0.1	3.3	10.0	13.2
1103-1123	-0.2	-3.0	-7.5	-10.3	0.1	2.5	3.4	5.8
1123-1143	-0.3	-3.5	-2.3	-4.6	0	-1.5	-3.3	-4.4
1143-1163	-0.4	-4.1	-2.3	-6.0	-0.1	-3.4	-3.4	-6.6
1163-1183	-0.5	-13.6	-3.3	-16.4	-0.3	-3.3	-3.5	-6.5
RADIAL BEAM 3								
1005-1025	1.2	4.7	5.8	9.4	1.0	2.5	3.4	4.1
1025-1045	1.2	3.6	4.2	6.5	0.9	1.8	3.4	4.3
1045-1065	1.1	3.4	13.8	13.9	0.8	2.0	3.2	3.6
1065-1085	1.0	7.3	27.3	33.5	0.7	2.1	6.1	7.5
1085-1105	0.4	3.1	23.3	25.1	0.6	4.6	8.0	12.0
1105-1125	0.4	3.3	13.1	16.0	0.5	3.1	2.3	4.9
1125-1145	0.3	3.2	7.1	10.1	0.4	2.1	2.8	3.6
1145-1165	0.2	3.4	7.9	8.6	0.3	3.6	2.7	4.6
1165-1185	0.1	14.9	13.7	28.5	0.2	4.2	2.3	6.3

TABLE 6.5.10-2 (Sheet 6)

RADIAL BEAM STRESSES
(ALL STRESSES IN KSI)

	Case 1. Maximum Up Force				Case 2. Maximum Down Force			
NODES	σ Axial	σ Y	σ z	σ Max	σ Axial	σ Y	σ z	σ Max
RADIAL BEAM 1								
1007-1027	0.9	2.8	6.2	6.7	0.6	2.3	2.8	3.8
1027-1047	0.9	2.8	5.0	6.1	0.6	1.9	2.8	4.1
1047-1067	0.8	2.5	15.6	16.4	0.5	1.8	2.2	3.1
1067-1087	0.7	6.1	29.3	34.7	0.4	3.4	7.0	10.0
1087-1107	0.8	3.4	28.8	28.9	0.7	4.6	7.6	11.4
1107-1127	0.7	3.9	17.1	20.3	3.6	3.6	2.1	5.0
1127-1147	0.7	3.5	10.2	13.1	0.6	2.5	2.9	4.0
1147-1167	0.6	3.3	9.6	10.9	0.5	3.7	2.8	4.6
1167-1187	0.4	14.9	14.4	28.8	0.3	7.6	2.4	9.7
RADIAL BEAM 5								
1009-1029	-1.2	-2.6	-4.4	-5.6	-1.9	-3.2	-3.6	-4.9
1029-1049	-1.2	-2.9	-6.7	-7.0	-2.0	-3.6	-3.8	-5.4
1049-1199	-1.3	-1.7	-8.8	-9.1	-2.1	-2.4	-4.0	-4.3
1199-1069	1.1	3.9	17.0	18.2	1.7	4.4	2.9	5.2
1069-1089	1.0	5.9	31.6	36.4	1.6	6.4	7.2	12.0
1089-1109	0.1	4.0	32.0	35.9	-0.3	-4.3	-8.8	-12.7
1109-1129	0	3.4	18.4	21.9	-0.4	-3.9	-2.7	-5.5
1129-1200	-0.1	-5.0	-9.5	-11.5	-0.5	-5.4	-3.7	-8.5
1200-1149	3.0	4.7	9.6	11.3	1.9	3.5	5.0	6.1
1149-1169	2.9	5.7	7.3	9.7	1.8	4.6	5.0	7.3
1169-1189	2.8	11.9	6.3	15.4	1.6	10.7	4.1	10.7
RADIAL BEAM 6								
1011-1031	0.3	3.2	5.9	8.9	0	1.8	1.7	3.5
1031-1051	0.3	1.7	3.8	5.0	-0.1	-2.1	-1.8	-3.8
1051-1071	0.2	1.9	14.4	16.1	-0.1	-1.5	-2.1	-3.1
1071-1091	0.1	2.8	28.3	31.0	-0.2	-5.2	-7.3	-12.3
1091-1111	0.5	6.4	29.9	35.7	0.5	3.2	5.9	8.1
1111-1131	0.5	3.6	18.4	21.6	0.4	3.7	3.5	4.7
1131-1151	0.4	2.0	11.6	13.0	0.3	2.7	3.8	5.8
1151-1171	0.3	4.8	9.9	14.3	0.2	2.8	3.7	5.2
1171-1191	0.2	4.0	13.9	17.1	0	10.4	-2.3	-12.7

TABLE 6.5.10-2 (Sheet 7)

RADIAL BEAM STRESSES
(ALL STRESSES IN KSI)

	Case 1. Maximum Up Force				Case 2. Maximum Down Force			
NODES	σ Axial	σ Y	σ z	σ Max	σ Axial	σ Y	σ z	σ Max
RADIAL BEAM 7								
1013-1033	0.4	6.2	5.5	11.3	0.2	2.4	1.8	4.0
1033-1053	0.4	1.5	4.3	5.3	0.1	2.6	1.7	4.2
1053-1073	0.3	2.5	11.3	13.4	0	1.8	2.2	3.1
1073-1093	0.2	2.1	24.3	25.7	-0.1	-6.2	-7.6	-13.7
1093-1113	0.6	8.6	28.0	35.9	0.8	3.8	3.8	5.9
1113-1133	0.6	3.8	17.0	20.3	0.7	4.2	5.0	6.4
1133-1153	0.5	2.9	10.2	11.4	0.6	3.1	5.0	7.5
1153-1173	0.4	6.1	9.0	14.7	0.5	2.8	4.9	6.5
1173-1193	0.3	5.8	13.7	14.5	0.3	10.5	2.7	12.8
RADIAL BEAM 8								
1015-1035	1.4	9.7	3.3	9.7	1.9	4.4	3.6	6.2
1035-1055	1.4	2.9	3.3	4.3	1.8	4.8	3.5	6.5
1055-1075	1.3	3.9	6.5	9.1	1.7	3.7	5.3	6.1
1075-1095	1.3	3.5	16.5	16.7	1.7	8.2	11.7	18.2
1095-1115	1.5	11.4	30.6	40.5	1.8	5.1	7.1	10.4
1115-1135	1.4	4.9	17.5	21.0	1.7	5.6	8.3	10.9
1135-1155	1.4	4.5	7.6	8.6	1.7	4.3	8.2	10.9
1155-1175	1.3	7.8	3.3	9.8	1.6	3.6	7.1	8.8
1175-1195	1.1	7.9	3.2	9.9	1.4	10.1	4.2	12.9
RADIAL BEAM 9								
1017-1037	1.6	13.2	5.1	13.3	3.6	8.0	5.9	10.3
1037-1057	1.5	2.9	5.0	6.4	3.5	6.9	3.9	7.3
1057-1077	1.3	4.0	4.6	5.5	3.3	5.2	6.4	7.1
1077-1097	1.2	5.2	11.3	15.3	3.2	13.1	12.3	22.2
1097-1117	3.5	17.5	24.9	39.0	5.6	11.4	13.4	17.6
1117-1137	3.5	7.4	15.8	19.7	5.4	9.7	13.5	17.7
1137-1157	3.3	6.6	8.3	11.5	5.3	7.7	13.1	15.5
1157-1177	3.2	9.8	10.2	16.8	5.1	7.0	10.3	11.7
1177-1197	3.1	9.8	10.1	16.8	4.8	15.1	13.4	23.6

TABLE 6.5.10-2 (Sheet 8)

ICE BASKET HOLD-DOWN BAR STRESSES
(ALL STRESSES IN KSI)

	Case 1. Maximum Up Force				Case 2. Maximum Down Force			
NODES	σ Axial	σ Y	σ z	σ Max	σ Axial	σ Y	σ z	σ Max
BAR 1								
1021-1023	2.1	6.2	11.8	16.7	-0.6	-2.9	-2.0	-4.1
1023-1025	4.2	7.7	14.3	17.3	-1.0	-3.1	-1.7	-3.8
1025-1027	5.6	6.8	11.5	12.1	-1.2	-4.1	-1.7	-4.6
1027-1029	6.2	8.2	7.7	9.7	-1.3	-4.8	-2.4	-5.9
1029-1031	6.4	10.4	9.8	13.7	-1.1	-3.2	-3.3	-5.4
1031-1033	6.1	12.5	9.4	15.3	-0.8	-3.1	-3.7	-6.1
1033-1035	4.9	12.9	12.2	20.2	-0.3	-3.0	-3.8	-6.6
1035-1037	2.9	14.4	11.6	23.0	0.2	5.0	3.6	8.3
BAR 2								
1041-1043	0.2	1.8	6.3	7.9	-0.1	-2.1	-0.4	-2.4
1043-1045	0.4	2.6	7.4	9.7	-0.2	-2.8	-0.8	-3.3
1045-1047	0.6	4.6	4.8	8.8	-0.2	-4.5	-4.0	-5.1
1047-1049	0.7	6.3	2.0	7.5	-0.2	-5.9	-1.1	-6.6
1049-1051	0.9	5.4	4.0	8.5	0	-4.2	-1.7	-5.4
1051-1053	0.8	7.2	2.0	8.4	0	6.0	2.7	8.7
1053-1055	0.6	7.9	3.6	10.9	0.1	6.8	3.8	10.5
1055-1057	0.4	10.2	3.6	13.1	0.1	9.4	3.4	12.6
BAR 3								
1061-1063	0.7	6.1	5.5	10.8	-0.6	-0.7	-2.0	-2.2
1063-1065	1.4	6.8	7.1	12.2	-1.4	-2.2	-2.0	-2.8
1065-1067	2.1	8.6	6.0	12.0	-1.8	-5.0	-2.0	-5.2
1067-1069	2.6	9.4	3.0	9.8	-2.0	-7.8	-3.3	-9.2
1069-1071	2.4	6.6	3.9	7.4	-2.2	-7.0	-3.3	-8.1
1071-1073	2.0	5.6	3.4	6.9	-1.9	-8.3	-4.7	-10.8
1073-1075	1.3	3.9	3.4	6.0	-1.5	-8.4	-5.7	-12.4
1075-1077	0.3	4.7	2.7	6.9	-1.0	-10.7	-5.7	-15.4
BAR 4								
1101-1103	1.7	4.0	7.7	9.8	-0.6	-4.2	-2.9	-6.6
1103-1105	3.3	4.0	6.2	6.3	-0.7	-5.3	-2.3	-6.7
1105-1107	4.2	7.7	7.3	10.8	-1.0	-7.3	-1.9	-7.9
1107-1109	4.7	12.3	11.7	19.3	-1.1	-8.7	-3.4	-10.9
1109-1111	4.9	11.4	6.3	12.4	-1.0	-7.2	-4.2	-10.4
1111-1113	4.5	12.8	6.8	14.7	-0.7	-6.0	-2.4	-7.7
1113-1115	3.7	12.9	7.2	15.9	-0.3	-4.6	-1.4	-5.6
1115-1117	2.6	14.0	10.4	21.8	0.3	5.7	2.2	7.7

TABLE 6.5.10-2 (Sheet 9)

ICE BASKET HOLD-DOWN BAR STRESSES
(ALL STRESSES IN KSI)

	Case 1. Maximum Up Force				Case 2. Maximum Down Force			
NODES	σ Axial	σ Y	σ z	σ Max	σ Axial	σ Y	σ z	σ Max
BAR 5								
1121-1123	-0.1	-4.9	-4.3	-9.0	-0.2	-7.0	-1.8	-8.7
1123-1125	-0.3	-6.6	-2.2	-8.0	-0.3	-8.0	-1.3	-9.0
1125-1127	-0.4	-9.5	-3.1	-12.2	-0.4	-10.0	-1.1	-10.7
1127-1129	-0.7	-12.6	-13.2	-25.1	-0.6	-11.9	-5.0	-16.3
1129-1131	1.0	11.0	2.9	12.6	1.1	11.3	7.4	17.7
1131-1133	0.8	11.8	3.0	13.7	0.9	11.1	2.1	12.3
1133-1135	0.6	12.1	1.7	13.1	0.6	10.3	1.4	11.0
1135-1137	0.4	13.6	4.8	18.0	0.4	11.4	2.4	13.1
BAR 6								
1141-1143	0	11.0	7.4	18.3	-0.2	-6.8	-2.4	-8.9
1143-1145	0.1	12.2	2.4	14.5	-0.5	-8.4	-1.4	-9.3
1145-1147	0.1	13.5	6.8	20.2	-0.6	-10.9	-1.6	-11.7
1147-1149	0.3	13.0	14.1	26.1	-0.6	-12.3	-3.0	-14.7
1149-1151	0.9	10.9	6.6	16.2	-0.1	-11.2	-5.8	-16.3
1151-1153	0.7	10.2	4.5	13.9	0	12.5	3.1	15.6
1153-1155	0.5	8.5	1.8	9.7	0	12.3	2.1	14.3
1155-1157	0.3	8.9	5.8	14.2	0	13.1	4.1	16.9
BAR 7								
1161-1163	2.3	17.7	15.6	30.8	-1.4	-3.7	-6.1	-8.4
1163-1165	5.0	22.1	14.5	31.2	-3.0	-7.0	-5.6	-9.6
1165-1167	8.0	23.5	20.9	35.9	-3.8	-11.0	-4.4	-11.6
1167-1169	10.5	22.2	24.1	34.5	-3.7	-13.3	-6.1	-15.5
1169-1171	10.9	19.8	17.8	26.7	-3.3	-13.3	-8.8	-18.4
1171-1173	9.6	12.9	17.9	21.3	-2.2	-13.5	-7.3	-18.5
1173-1175	6.8	8.8	14.7	16.2	-1.3	-12.6	-5.4	-16.6
1175-1177	3.0	4.8	15.6	17.4	-0.7	-12.0	-6.4	-17.7

TABLE 6.5.10-2 (Sheet 10)

PLATFORM HORIZONTAL BRACING STRESSES
(ALL STRESSES IN KSI)

	Case 1. Maximum Up Force				Case 2. Maximum Down Force			
NODES	σ Axial	σ Y	σ z	σ Max	σ Axial	σ Y	σ z	σ Max
INNER PLATFORM								
1202-1199	-3.0	-1.9	2.2	-6.7	-3.9	-2.2	-1.0	-7.1
1203-1199	6.4	2.1	3.1	11.3	2.6	1.8	-1.0	5.5
1199-1216	9.7	2.1	2.2	13.7	8.5	1.8	-1.0	11.3
1199-1217	-5.7	1.4	1.3	-8.4	-9.3	1.2	-2.1	-12.6
OUTER PLATFORM								
1204-1200	-9.6	-4.1	2.9	-16.6	-13.8	-3.6	1.8	18.8
1205-1200	16.2	4.6	6.2	26.8	12.0	-4.0	-2.7	18.0
1200-1218	19.8	2.8	-5.6	26.0	15.6	3.3	-1.3	19.6
1200-1219	-12.5	3.4	6.7	-20.8	-16.8	3.8	-3.8	-24.4

OUTER COLUMN VERTICAL CROSS-BRACING STRESSES
(ALL STRESSES IN KSI)

	Case 1. Maximum Up Force				Case 2. Maximum Down Force			
NODES	σ Axial	σ Y	σ z	σ Max	σ Axial	σ Y	σ z	σ Max
420-550	-12.1	-17.3	-15.6	-20.9	-7.5	-12.8	-7.7	13.0
500-550	9.2	13.4	11.7	16.0	13.7	17.9	14.0	18.1
550-518	-12.0	-17.2	-14.7	-19.9	-7.6	-12.8	-8.6	-13.3
550-438	9.1	13.4	12.5	16.8	13.7	18.0	14.2	18.4
500-518	10.4	12.4	12.0	14.0	6.7	8.7	7.8	9.8

TABLE 6.5.10-2 (Sheet 11)

DOOR ARRESTOR PLATE STRESSES
(ALL STRESSES IN KSI)

	Case 1. Maximum Up Force			Case 2. Maximum Down Force		
NODES	σ max	σ min	Tau max	σ max	σ minY	Tau max
COLUMN LINE 1						
42-72-73	6.1	-4.2	5.1	6.1	-3.5	4.8
73-43-42	6.8	-2.9	4.8	5.0	-4.7	4.9
72-22-73	1.1	-2.6	1.8	3.5	-4.8	4.2
23-73-22	0.9	-2.2	1.6	-0.1	-6.2	3.0
43-73-74	2.1	-4.2	3.1	0.8	-5.3	3.0
74-44-43	7.5	1.7	2.9	0.6	-4.5	2.5
73-23-74	1.9	-2.6	2.3	2.6	-5.6	4.1
24-74-23	1.1	-2.6	1.9	-0.1	-7.0	3.4
44-74-75	4.8	0.7	2.1	0.1	-5.3	2.7
75-45-44	7.1	1.9	2.6	-0.3	-4.7	2.2
74-24-75	1.4	-2.3	1.9	1.3	-5.2	3.3
25-75-24	1.1	-2.7	1.9	0.2	-6.7	3.5
45-75-76	3.9	0.8	1.6	0	-4.2	2.1
76-46-45	6.4	2.3	2.0	-1.0	-4.2	1.6
75-25-76	1.2	-1.6	1.4	0.9	-3.6	2.3
26-76-25	0.8	-2.5	1.7	-0.4	-5.4	2.5
46-76-77	1.7	0.5	0.6	0.1	-2.0	1.1
77-47-46	1.3	-2.7	2.0	2.8	0.8	1.0
76-26-77	0.8	-1.5	1.1	0.3	-1.6	0.9
27-77-26	-0.1	-2.5	1.2	0.4	-4.0	2.2
COLUMN LINE 2						
342-372-373	14.0	-4.6	9.3	13.6	-3.5	8.5
373-343-342	15.6	-3.2	9.4	13.2	-4.1	8.7
372-322-373	4.9	-4.5	4.7	6.8	-6.1	6.4
323-373-322	1.1	-5.9	3.5	-0.4	-9.7	4.6
343-373-374	5.1	-6.6	5.9	3.1	-7.1	5.1
374-344-343	11.6	1.7	5.0	4.1	-3.8	4.0
373-323-374	6.6	-5.1	5.8	6.5	-7.4	7.0
324-374-323	1.9	-6.6	4.3	0.1	-10.5	5.3
344-374-375	3.2	-5.6	4.4	1.7	-7.1	4.4
375-345-344	9.7	1.9	3.9	6.8	0.3	3.3
374-324-375	5.1	-4.9	5.0	4.3	-7.1	5.7
325-375-324	2.7	-6.1	4.4	1.1	-9.5	5.3
345-375-376	2.3	-4.0	3.1	1.4	-5.8	3.6
376-346-345	8.1	2.3	2.9	6.1	-0.1	3.1
375-325-376	4.1	-3.7	3.9	3.1	-5.1	4.1
326-376-325	3.0	-4.8	3.9	1.2	-7.0	4.1
346-376-377	1.01	-2.1	1.5	2.9	-1.8	2.4
377-347-346	4.8	0.5	2.2	4.4	-1.2	2.8
376-326-377	3.0	-2.9	2.9	2.0	-2.5	2.3
327-377-326	3.8	-3.6	3.7	3.2	-4.0	3.6

TABLE 6.5.10-2 (Sheet 12)

DOOR ARRESTOR PLATE STIFFENER STRESSES
(ALL STRESSES IN KSI)

	Case 1. Maximum Up Force				Case 2. Maximum Down Force			
NODES	σ Axial	σ Y	σ z	σ Max	σ Axial	σ Y	σ z	σ Max
COLUMN LINE 1 HORIZONTAL STIFFENERS								
47-72	3.1	4.0	4.4	4.9	5.0	6.0	6.5	6.8
72-22	0.3	0.9	0.5	0.9	1.9	2.5	2.1	2.6
43-73	-0.4	-0.5	-0.9	-1.0	-0.3	-0.4	-0.6	-0.7
73-23	0.4	0.6	0.7	0.8	0.6	0.7	1.1	1.3
44-74	-0.5	-0.6	-0.8	-0.8	-0.5	-0.6	-0.7	-0.8
74-24	0.1	0.3	0.3	0.6	0.1	0.3	0.6	0.9
45-75	-0.3	-0.3	-0.3	-0.4	-0.1	-0.1	-0.3	-0.3
75-25	0.2	0.4	0.4	0.6	0.5	0.7	0.9	1.1
46-76	-0.1	-0.4	-0.2	-0.4	0.2	0.3	0.3	0.6
76-26	0.1	0.3	0.2	0.4	0.6	0.9	0.8	1.0
47-77	-1.0	-1.7	-1.2	-1.8	0.8	1.4	0.8	1.4
77-27	-0.8	-1.4	1.1	-1.7	1.3	1.7	1.3	1.8
COLUMN LINE 1 VERTICAL STIFFENERS								
72-73	0.3	0.9	1.0	1.2	-1.1	-1.6	-1.5	-2.0
73-74	1.6	2.7	1.9	3.0	-0.2	-1.3	-0.6	-1.3
74-75	1.7	3.0	1.9	3.2	-0.5	-1.8	-0.8	-2.0
75-76	1.3	2.4	1.4	2.5	-0.7	-1.8	-0.9	-1.7
76-77	0.6	1.2	0.6	1.2	-0.5	-1.0	-0.5	-1.0
COLUMN LINE 2 HORIZONTAL STIFFENERS								
342-372	8.9	9.9	12.2	12.5	10.9	11.9	14.4	14.7
372-322	2.2	2.8	2.4	2.8	3.8	4.4	3.9	4.5
343-373	-0.9	-1.0	-1.9	-2.1	-0.8	-1.0	-1.7	-1.8
373-323	1.0	1.2	1.9	2.0	1.2	1.4	2.3	2.5
344-374	-1.3	-1.3	-2.0	-2.0	-1.3	-1.3	-1.9	-1.9
374-324	0.2	0.4	1.1	1.3	0.2	0.4	1.5	1.6
345-375	-0.6	-0.7	-1.1	-1.1	-0.4	-0.5	-1.0	-1.0
375-325	0.6	0.7	1.4	1.5	0.9	1.0	1.9	2.0
346-376	-1.0	-0.3	-0.4	-0.6	0.2	0.4	0.8	1.0
376-326	0.8	1.0	1.5	1.7	1.4	1.6	2.0	2.2
347-377	-1.8	-2.5	-1.8	-2.5	0.0	-0.6	0.3	0.8
377-327	-0.5	-1.0	-0.5	-1.1	1.6	2.2	2.1	2.7

TABLE 6.5.10-2 (Sheet 13)

DOOR ARRESTOR PLATE STIFFENER STRESSES
(ALL STRESSES IN KSI)

	Case 1. Maximum Up Force				Case 2. Maximum Down Force			
NODES	σ Axial	σ Y	σ z	σ Max	σ Axial	σ Y	σ z	σ Max
COLUMN LINE 2 VERTICAL STIFFENERS								
372-373	-0.3	-0.8	1.3	-1.7	-1.7	-2.2	-2.6	-3.1
373-374	2.4	3.4	3.3	4.4	0.6	1.7	1.7	2.7
374-375	2.3	3.5	3.1	4.3	0.1	1.4	1.1	2.3
375-376	1.5	2.6	2.1	3.2	-0.5	-1.5	-1.1	-2.0
376-377	0.5	1.0	0.8	1.4	-0.6	-1.2	-1.1	-1.3

THREE TURNING VANE ASSEMBLY STRESSES
(ALL STRESSES IN KSI)

	Case 1. Maximum Up Force				Case 2. Maximum Down Force			
NODES	σ Axial	σ Y	σ z	σ Max	σ Axial	σ Y	σ z	σ Max
UPPER TURNING VANE								
TOP								
220-221	0.1	0.2	26.9	27.0	0.1	0.1	27.8	27.8
221-222	-0.9	-1.0	20.1	20.3	-0.9	-0.9	20.8	20.8
222-223	-0.9	-1.1	19.9	20.1	-0.9	-1.0	20.5	20.5
223-224	0	-0.1	26.4	26.6	0	-0.1	27.3	27.4
MIDDLE								
225-226	0.1	0.2	30.9	31.0	0.1	0.2	31.8	32.0
226-227	0.1	0.2	23.5	23.7	0.1	0.2	24.3	24.4
227-228	0	0.2	23.1	23.2	0	0.3	23.8	23.9
228-229	0	-0.1	30.2	30.3	0	-0.3	31.2	31.4
BOTTOM								
230-231	0	-0.1	25.2	25.3	0	0	26.0	26.0
231-232	0.9	1.0	20.8	21.0	0.9	1.0	21.5	21.6
232-233	0.9	1.0	20.6	20.7	0.9	1.0	21.3	21.3
233-234	0	-0.2	24.8	25.0	0	-0.1	25.6	25.7

TABLE 6.5.10-2 (Sheet 14)

TURNING VANE ASSEMBLY MOUNTING PLATE STRESSES
(ALL STRESSES IN KSI)

	Case 1. Maximum Up Force			Case 2. Maximum Down Force		
NODES	σ max	σ min	Tau max	σ max	σ min	Tau max
COLUMN LINE 1						
87-81-82	1.9	-0.7	1.3	2.3	-1.3	1.8
87-82-85	2.2	0.1	1.1	2.6	0.3	1.2
85-86-87	4.2	-0.2	2.2	2.2	-1.0	1.6
82-83-85	1.0	-0.2	0.6	1.0	0.1	0.5
84-85-83	1.2	-0.3	0.8	1.8	-0.6	1.2
89-63-62	3.2	1.4	0.9	2.2	0.1	1.1
89-62-61	1.0	-1.7	1.3	1.2	-5.2	3.2
89-61-81	0.7	-0.6	0.6	0.2	-4.0	2.1
61-82-81	-0.4	-8.5	4.0	1.6	-8.0	4.8
62-82-61	1.2	-1.5	1.4	4.2	0.2	2.0
63-82-61	1.8	-0.4	1.1	2.3	0	1.2
COLUMN LINE 2						
387-381-382	1.6	1.0	0.3	1.5	-0.3	2.3
387-382-385	1.4	0.2	0.6	2.1	0.2	1.0
385-386-387	4.2	0.8	1.7	2.6	-1.2	1.9
382-383-385	1.1	0.7	0.2	1.0	-0.3	0.6
384-385-383	2.2	0	1.1	3.1	-0.1	1.6
389-363-362	1.7	-0.2	1.0	1.0	-1.8	1.4
389-362-381	1.9	-1.0	1.4	2.1	-4.7	3.4
389-361-381	0.9	-1.7	1.3	1.0	-5.9	3.4
361-382-381	1.7	-5.2	3.4	4.3	-5.4	4.8
362-382-361	2.3	0.8	0.7	2.6	-0.6	1.6
363-382-361	1.6	0.5	0.6	2.2	0.9	0.6

JET IMPINGEMENT SLOTTED PLATE STRESSES
(ALL STRESSES IN KSI)

	Case 1. Maximum Up Force				Case 2. Maximum Down Force			
NODES	σ Axial	σ Y	σ z	σ Max	σ Axial	σ Y	σ z	σ Max
560-561	0	37.2	0	37.3	0	37.2	-0.1	37.3
561-562	0	36.2	0	36.2	0	36.2	-0.1	36.3
562-563	0	36.2	-0.1	36.2	0	36.2	-0.1	36.3
564-563	-0.1	-37.4	-0.1	-37.4	-0.1	-37.4	-0.2	-37.5

TABLE 6.5.11-1

DESIGN LOADS AND PARAMETERS
TOP DECK

Plant Parameters	
Ambient temperature before cooldown, maximum °F	100
Ambient temperature, upper surface and hinge bar, range, °F	75-100
Ambient temperature, lower surface, minimum °F	15
Post-LOCA temperature, lower surface, minimum °F	15
Post-LOCA temperature, (no Δp applied), maximum °F	190
Dead Weight	
Air handling unit and support structure, lbs/bay	2500
Grating, lbs per ft^2	7.5
Blanket panel, lbs per ft^2	1.33
Hinge bar, lbs per ft	53
Static design equivalent of live load (personnel traffic), psf	100
LOCA Loading	
Maximum drag load on horizontal beam surfaces, lbs/ft^2	177
Maximum drag load on grating, lb/ft^2	24.8
Maximum back pressure following LOCA, psi	0.28
Maximum drag load on AHU, lbs	1,250

Note: Margin and dynamic load factor are applied to tabulated values as appropriate.

TABLE 6.5.11-2

SUMMARY OF RESULTS
UPPER BLANKET DOOR STRUCTURAL ANALYSIS - LOCA

Item	Area	Code Allowable Stresses Max. Calculated Stress	Basis
1	Skin and bands, direct tension		B
2	Hinge bar - bending	6.30	A
3	Anchor bolts - tension	1.00+	C
4	Floor grating - bending	4.55	D
5	Insulation tip stress - tear	2.01	D
	- tensile	16.70	

*KEY TO DESIGN BASIS

A. Allowable value per AISC-69 limits
B. ASTM-177 minimum tensile with AISC allowable
C. ASTM-A193 minimum tensile with AISC allowable
D. Strength values per Manufacturer's literature

TABLE 6.5.12-1

DESIGN LOADS AND PARAMETERS
INTERMEDIATE DECK

A. Normal Operations

Ambient temperature before cooldown, maximum, ^{o}F	100
Ambient temperature, minimum,^{o}F	10
Temperature differential across deck, estimated, ^{o}F	$\pm$1

B. Dead Weight

Panel, lbs. per ft^2, maximum	5.5
Static design equivalent of live load (personnel traffic), psf	100

C. Accident Conditions

Post-LOCA temperature (No ΔP applied), max. ^{o}F	190
Pressure across intermediate deck	Figure 6.5.12-2

NOTE: For design purposes a 40% margin is applied to the differential pressure given in Figure 6.5.12-2.

TABLE 6.5.15-1

SUMMARY OF WALTZ MILL TESTS

Compaction Tests

One foot diameter wire mesh baskets, loaded with flake ice to various heights, lead weights added to simulate additional height of ice.

Test	Started	Terminated	Test (months)	Equivalent Lengths of (ft.)	Compaction Height of Bed (% Volume In First Year)
D'	2/21/69	8/28/70	18.0	22	24.5
E'	2/21/69	8/28/70	18.0	7.5	5.5

Shear Tests

One foot diameter wire mesh baskets, loaded with flake ice to various heights, temporarily supported between two wooden discs by pegs which are removed after one month.

Test	Started	Terminated	Length of Test (months)	Height of Bed (ft.)	Inches/Year)
G'	9/16/69	8/28/70	11.4	5	0.9
H'	9/16/69	8/28/70	11.4	3	0.9
I'	9/16/69	8/28/70	11.4	1	0.4

*Shear rate approximated, based on 6 months of data; not applicable for greater than 6 months.

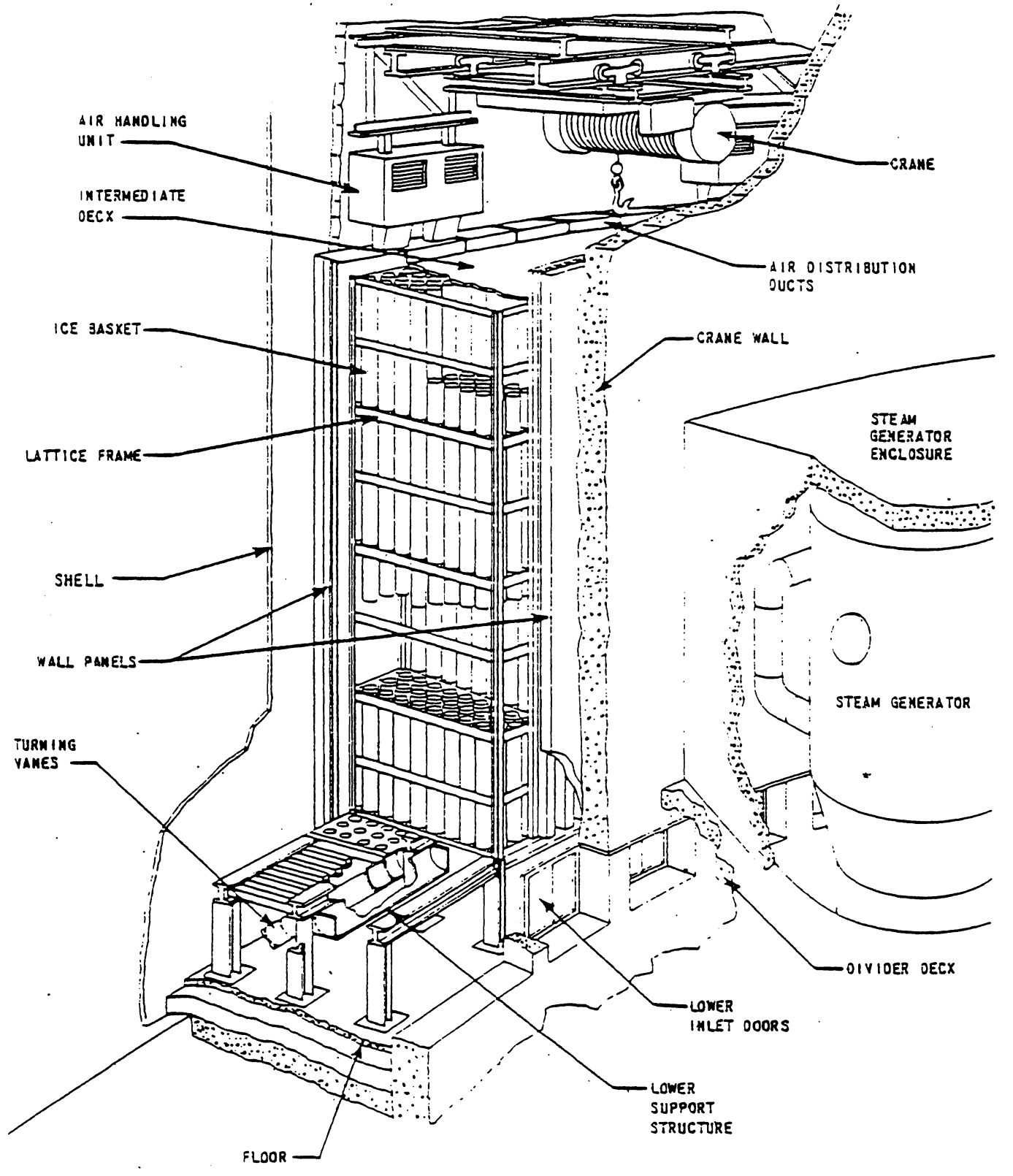

Figure 6.5.1-1 Isometric of Ice Condenser

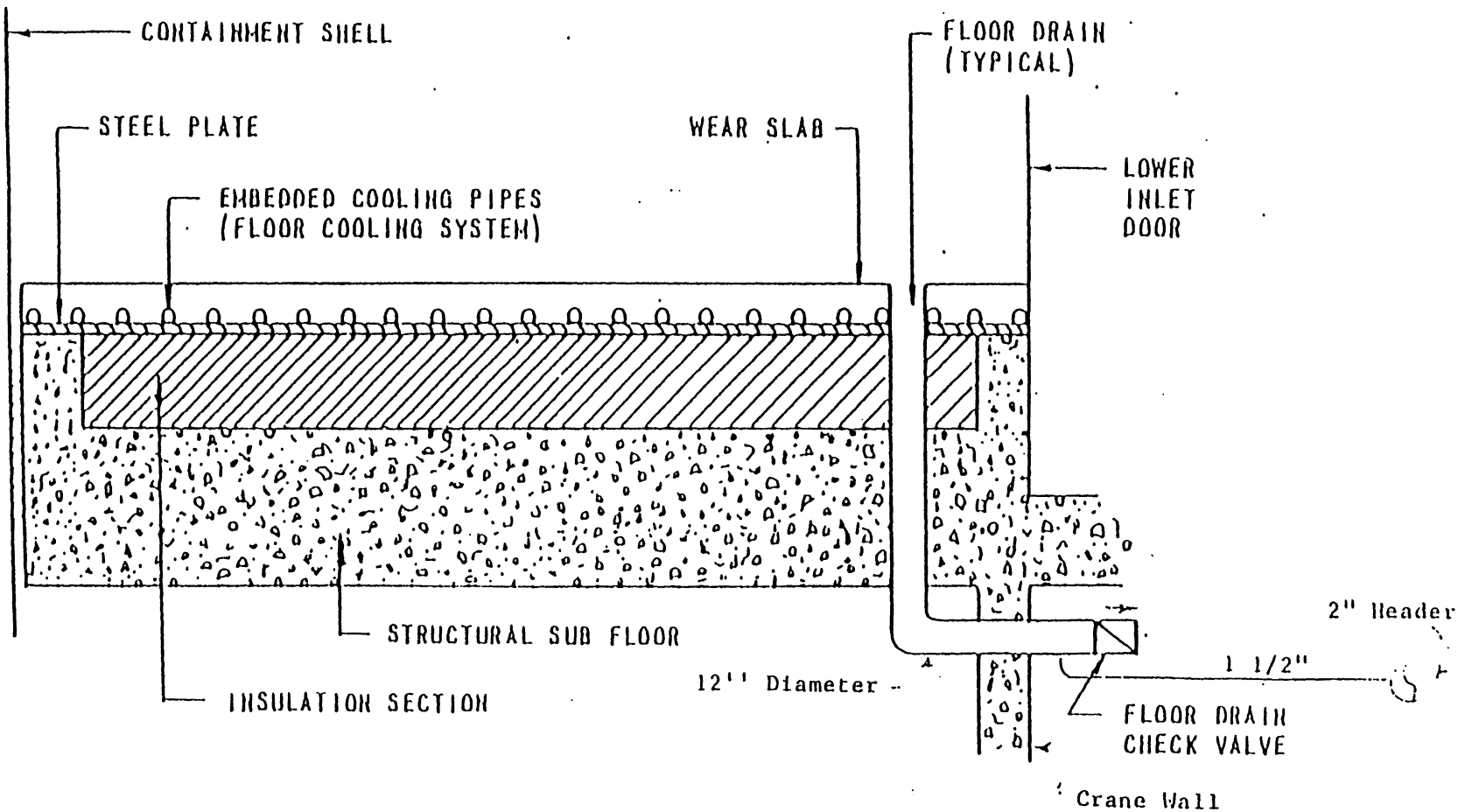

Figure 6.5.1-2.A ORIGINAL Floor Structure

3372-13

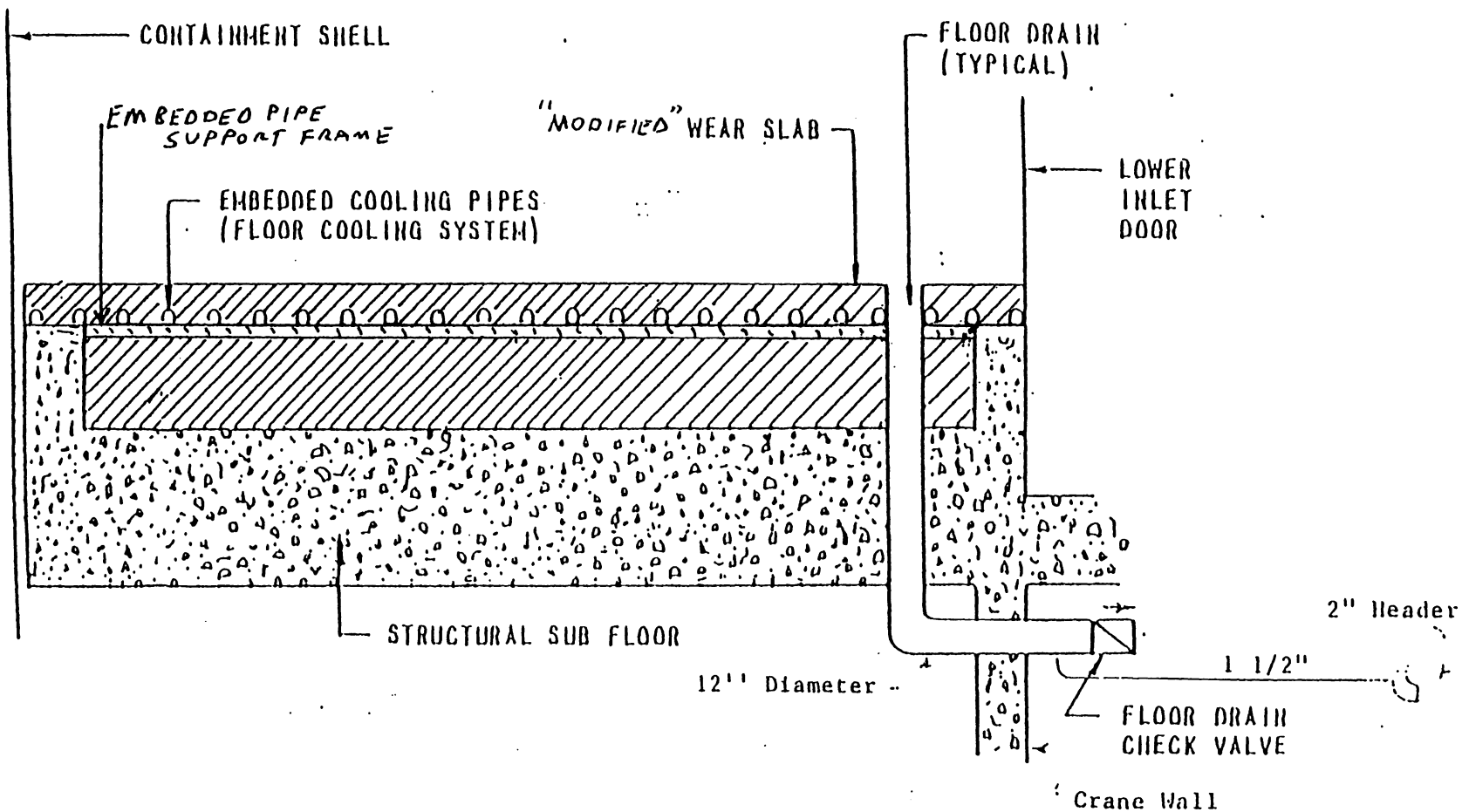

Figure 6.5.1-2.B "MODIFIED" Floor Structure

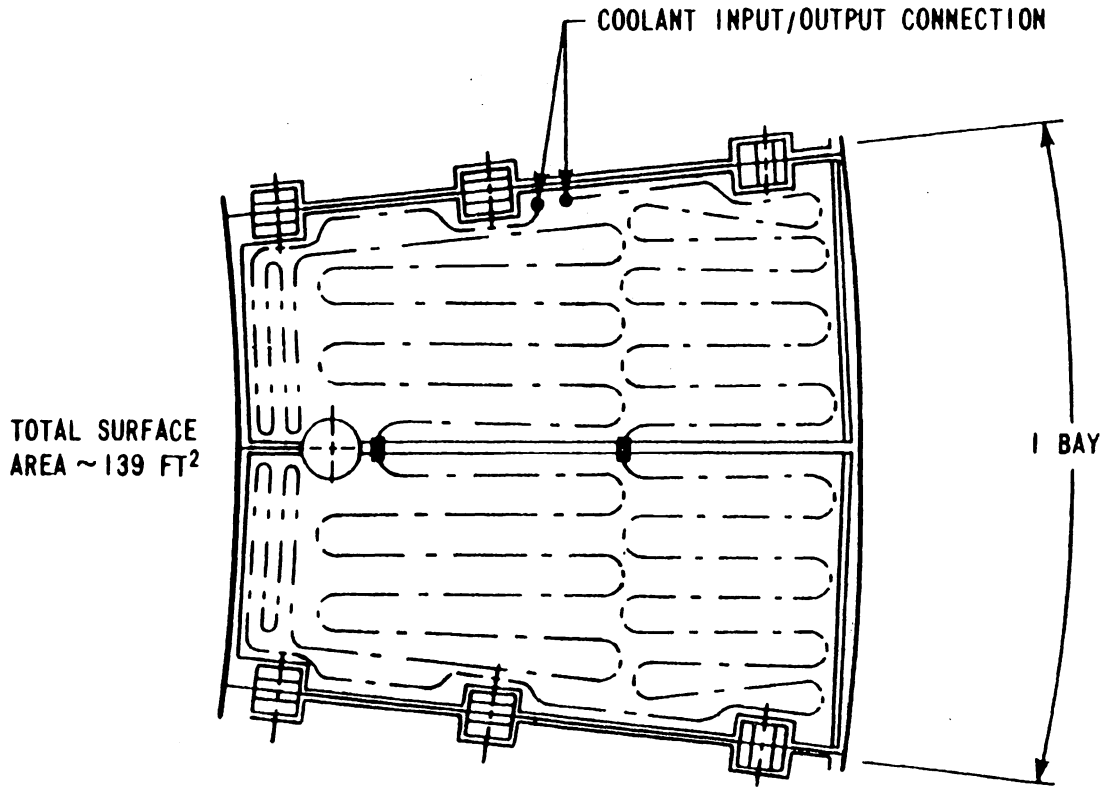

Figure 6.5.1-3 Wear Slab Top Surface Area Showing Typical Coolant Piping Layout

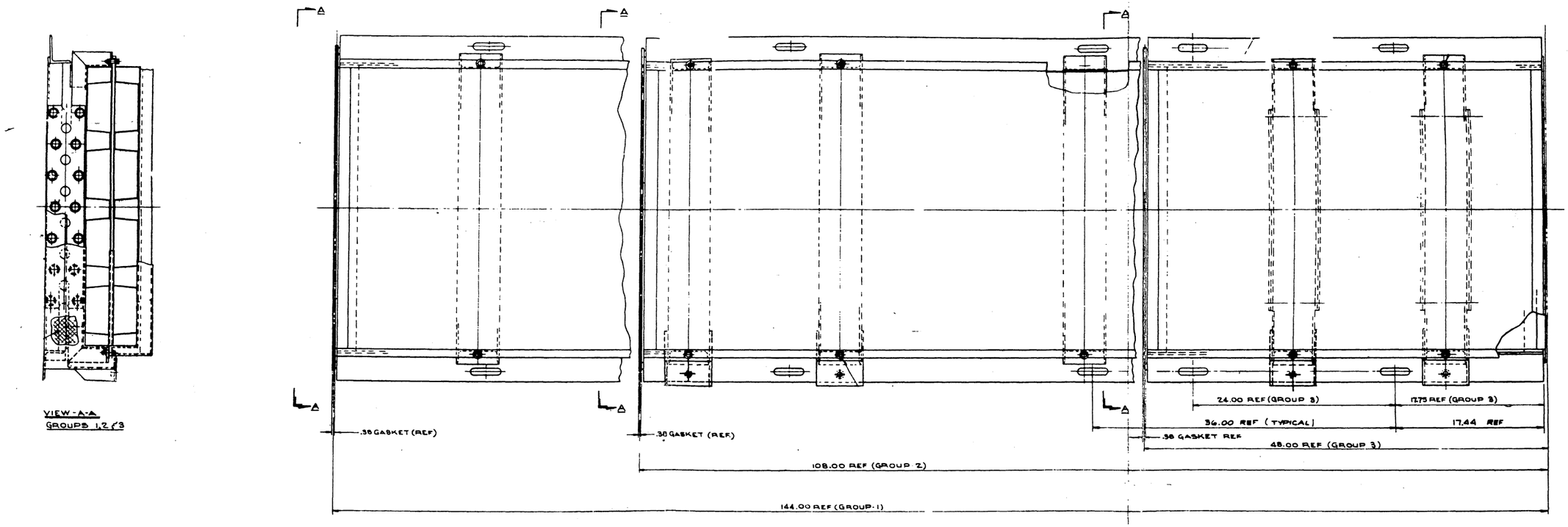

Figure 6.5.2-1 Crane Wall Panel Drawing

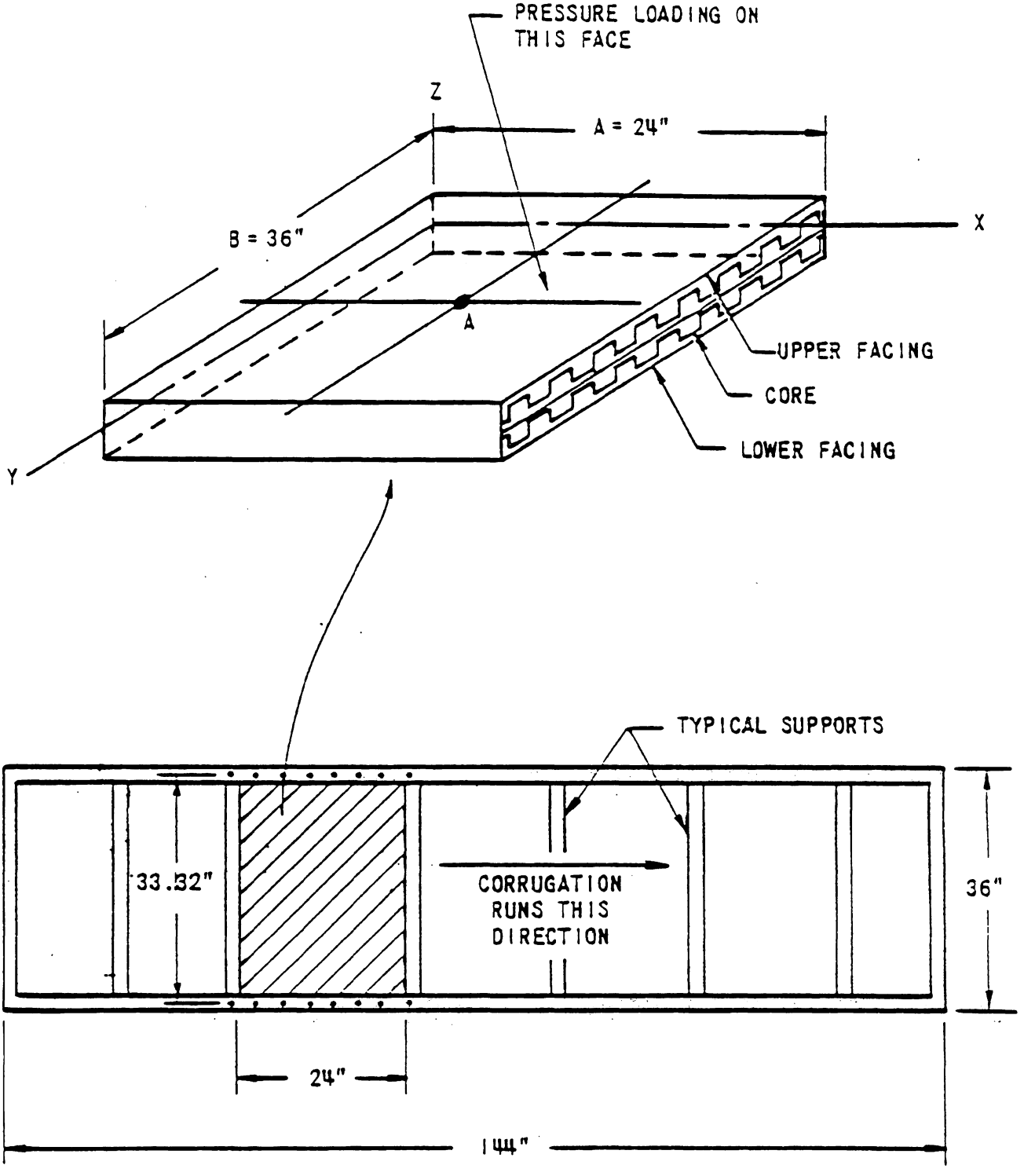

Figure 6.5.2-2 Wall Panel DBA Pressure Loading Model

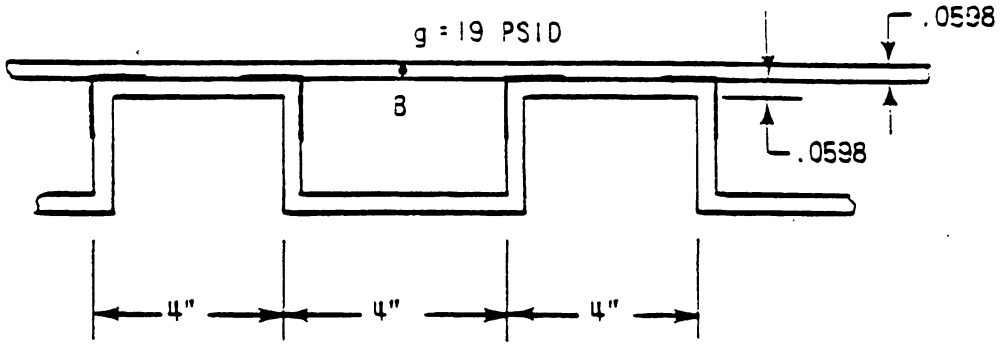

LOCAL SECTION OF WALL PANEL

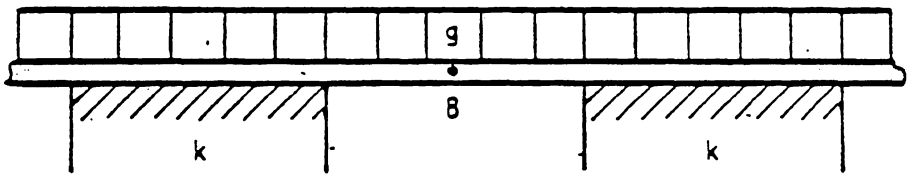

SIMPLIFIED MODEL - ELASTIC FOUNDATION

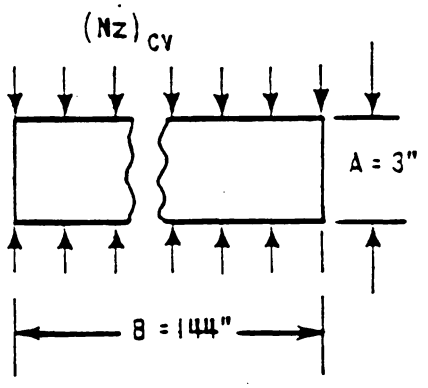

LEG OF THE CORRUGATED CORE

Figure 6.5.2-3 Wall Panel Local Stress Analysis

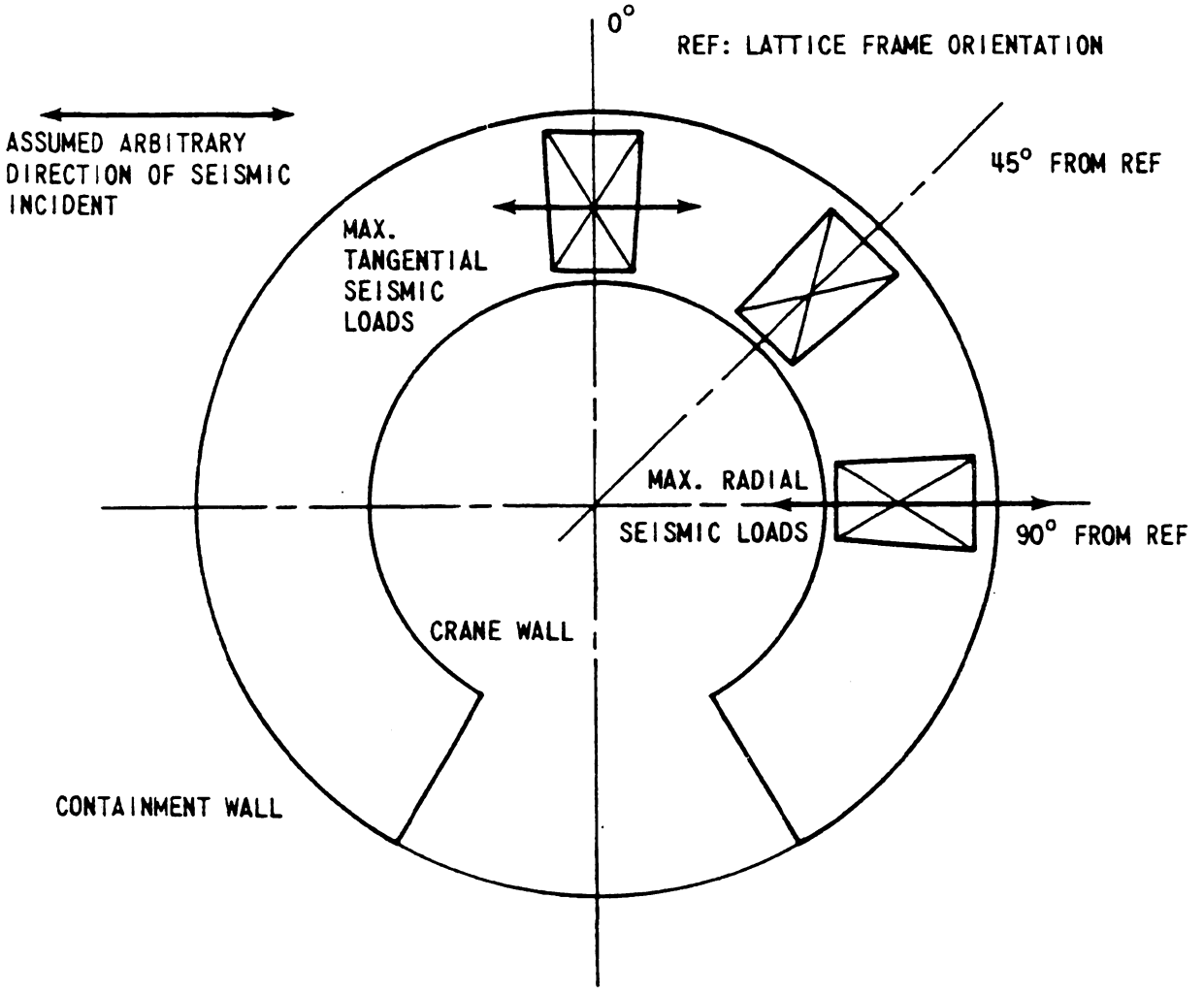

NOTES:

1. MAXIMUM TANGENTIAL AND RADIAL SEISMIC LOADS CANNOT OCCUR SIMULTANEOUSLY.
2. TANGENTIAL AND RADIAL SEISMIC LOADS 45 DEGREES FROM THE REFERENCE DIRECTION OF SEISMIC INPUT OCCUR SIMULTANEOUSLY AND THE MAGNITUDE IS THE AVERAGE OF MAXIMUM RADIAL AND MAXIMUM TANGENTIAL TIMES THE COSINE OF 45°, OR $\left(\frac{\text{RADIAL} + \text{TANGENTIAL}}{2}\right) .707$.
3. HORIZONTAL AND VERTICAL SEISMIC LOADS CAN OCCUR HORIZONTALLY.
4. BLOWDOWN LOADS, TANGENTIAL, RADIAL AND VERTICAL CAN OCCUR SIMULTANEOUSLY. RADIAL BLOWDOWN LOADS ALWAYS OCCUR IN THE DIRECTION OF THE CONTAINMENT WALL.

Figure 6.5.3-1 LATTICE FRAME ORIENTATION

REVISED BY AMENDMENT 6.

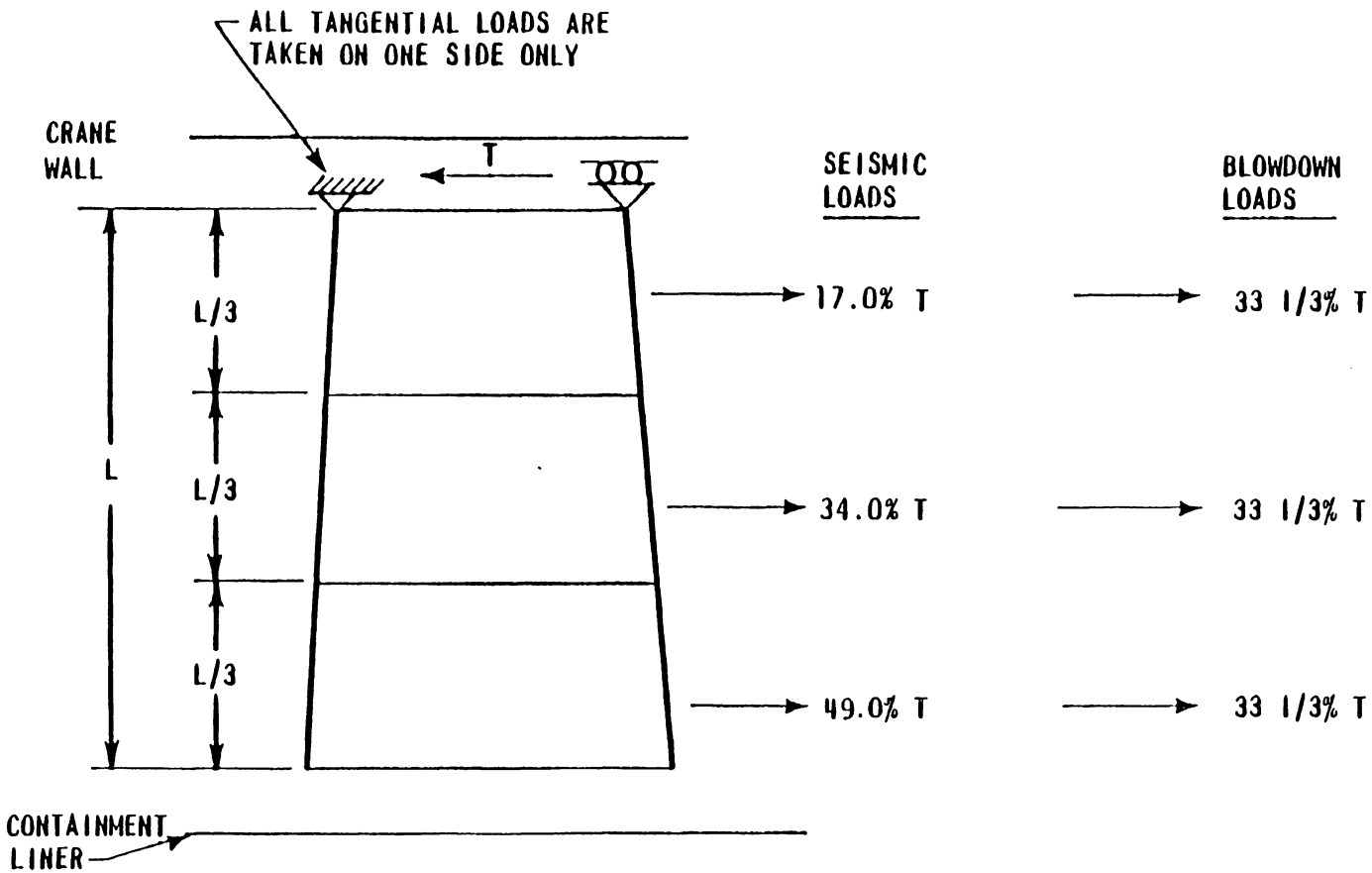

Figure 6.5.3-2 Load Distribution for Tangential Seismic and Blowdown Loads in Analytical Model

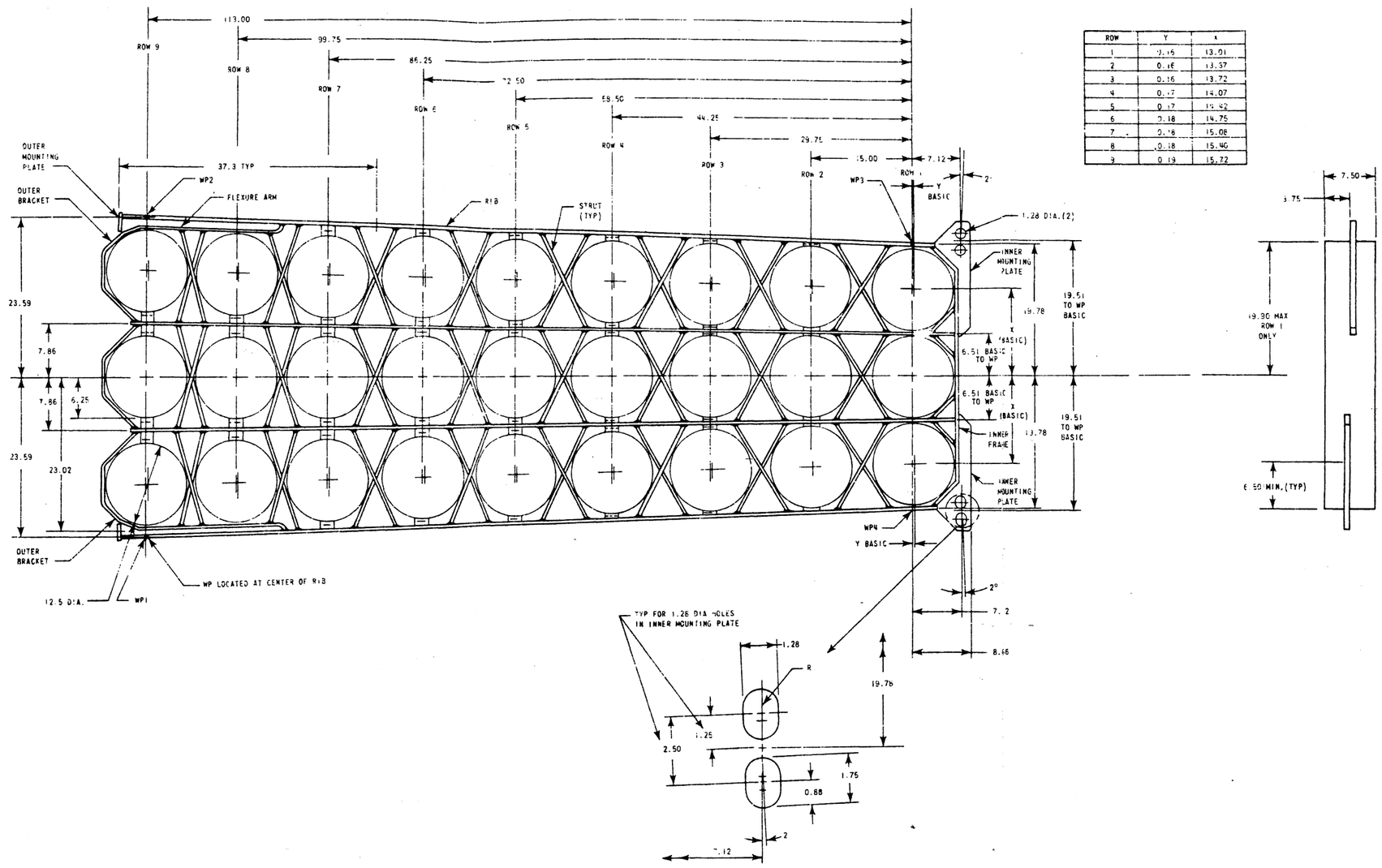

ROW	Y	X
1	0.15	13.01
2	0.16	13.37
3	0.16	13.72
4	0.17	14.07
5	0.17	14.42
6	0.18	14.75
7	0.18	15.08
8	0.18	15.40
9	0.19	15.72

Figure 6.5.3-3 Lattice Frame

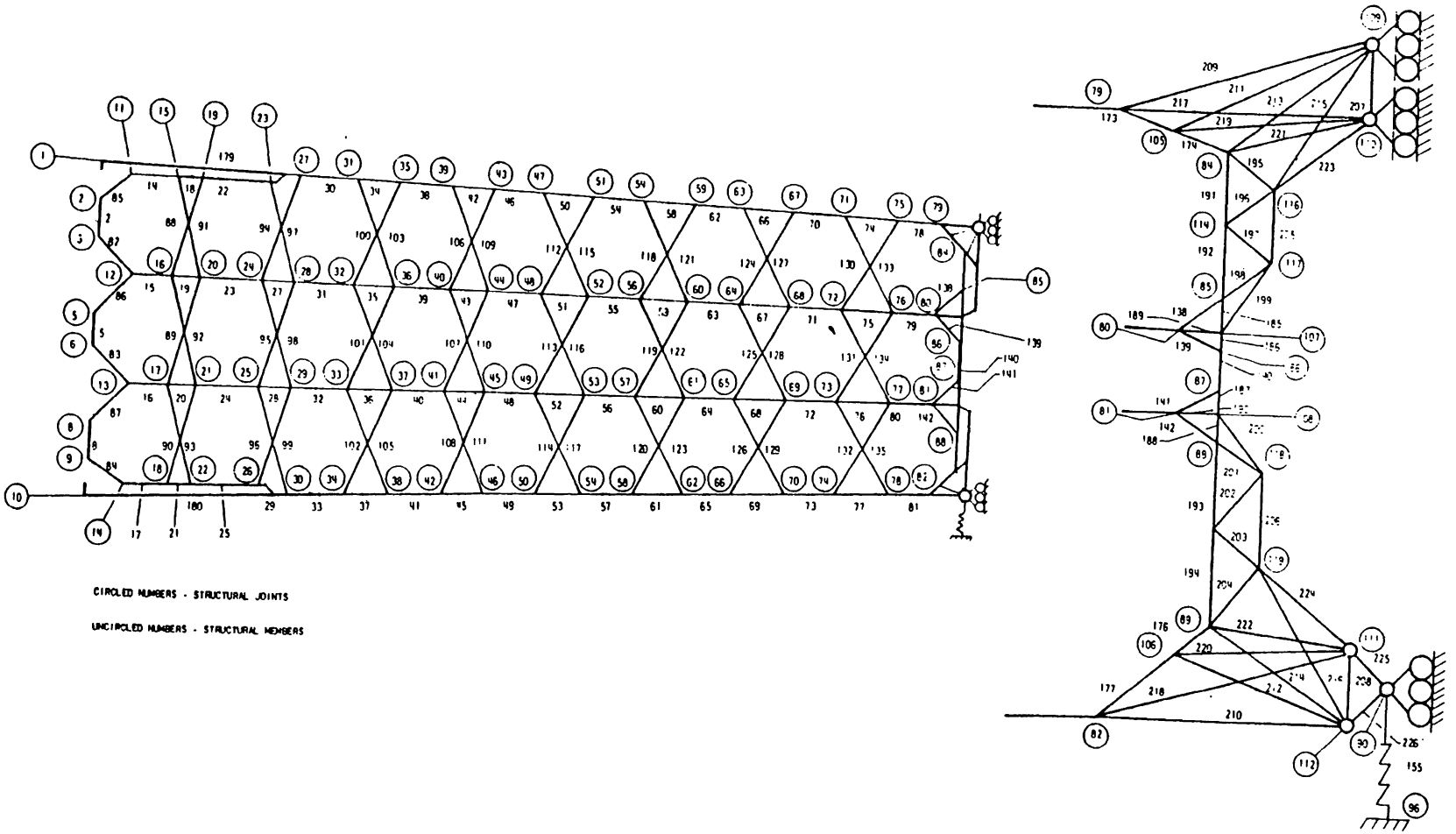

Figure 6.5.3-4 Lattice Frame Analysis Model

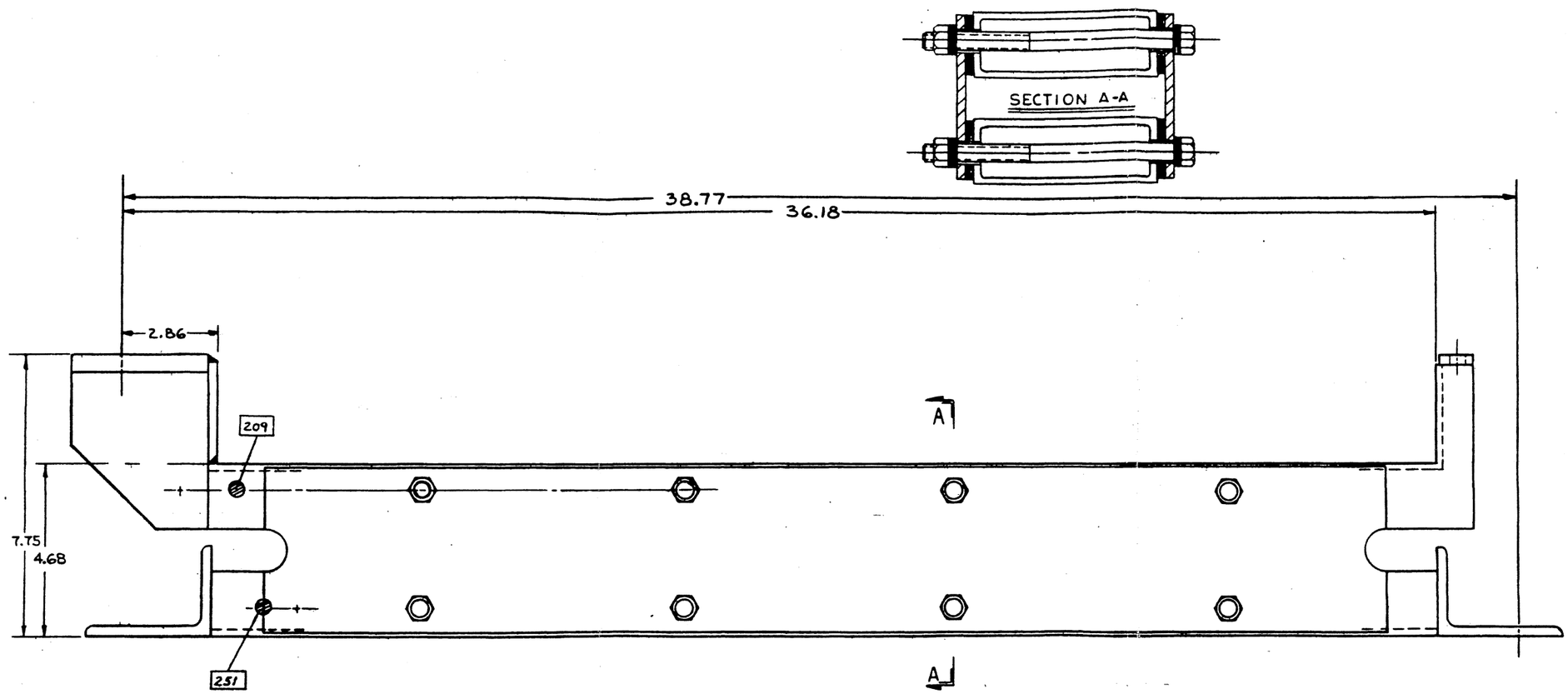

Figure 6.5.3-5 Transverse Beam Analytical Model

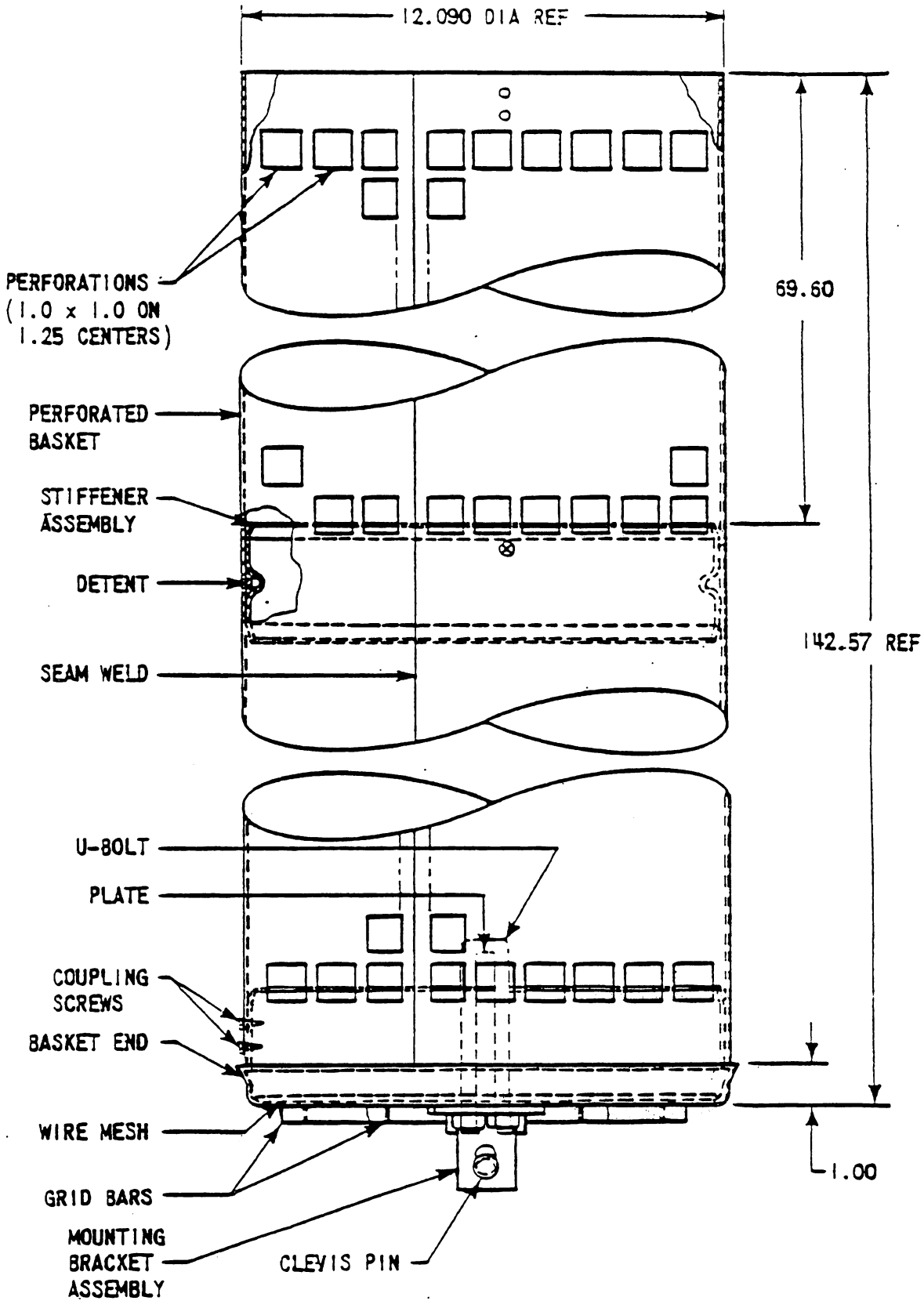

Figure 6.5.4-1 Typical Bottom Ice Basket Assembly

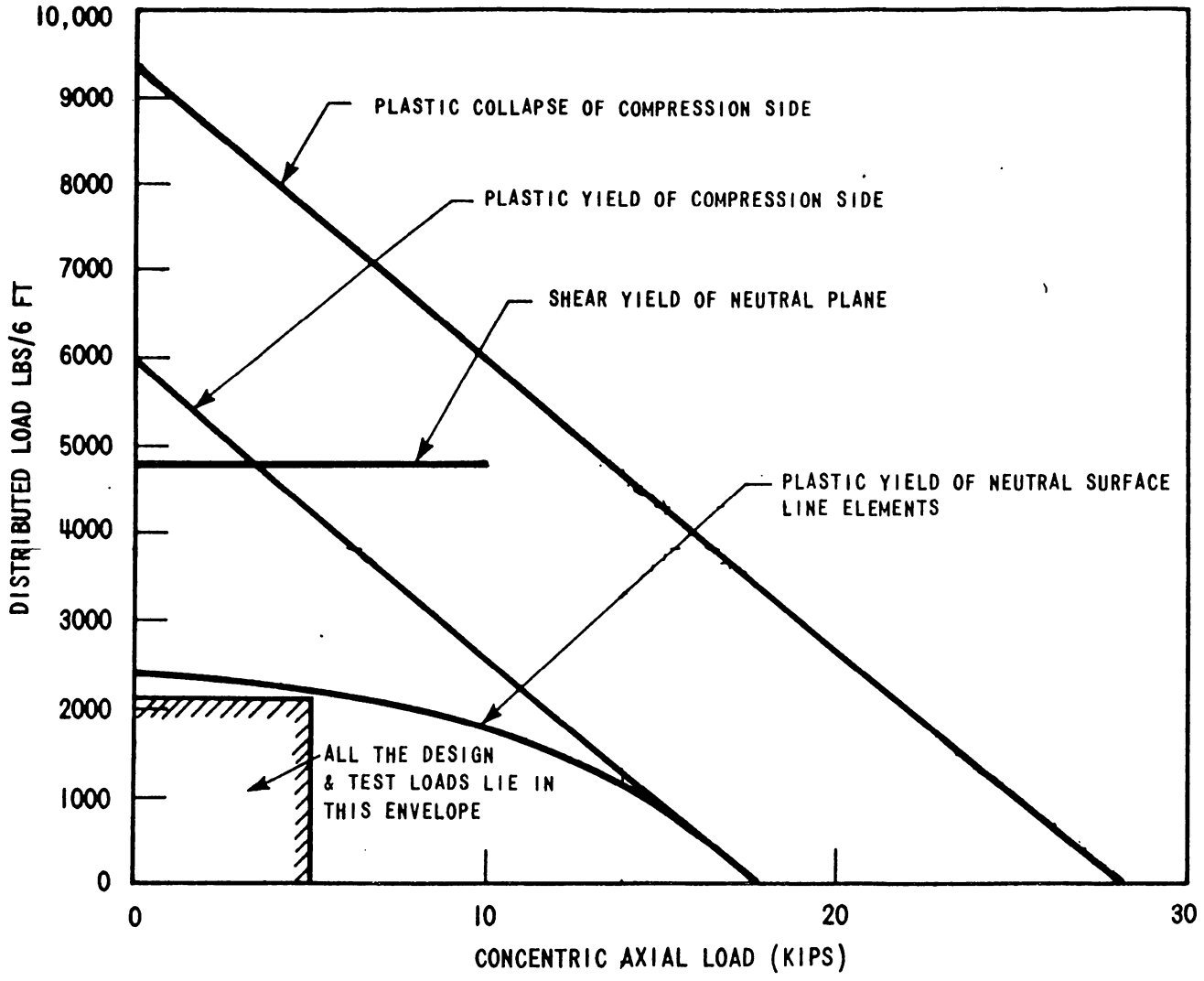

Figure 6.5.4-2 Combinations of Concentric Axial Load and Distributed Load That Will Cause Failure of a Perforated Metal Ice Basket Material: A-569 Steel, Gauge - 14, 1.0" Sq. Holes

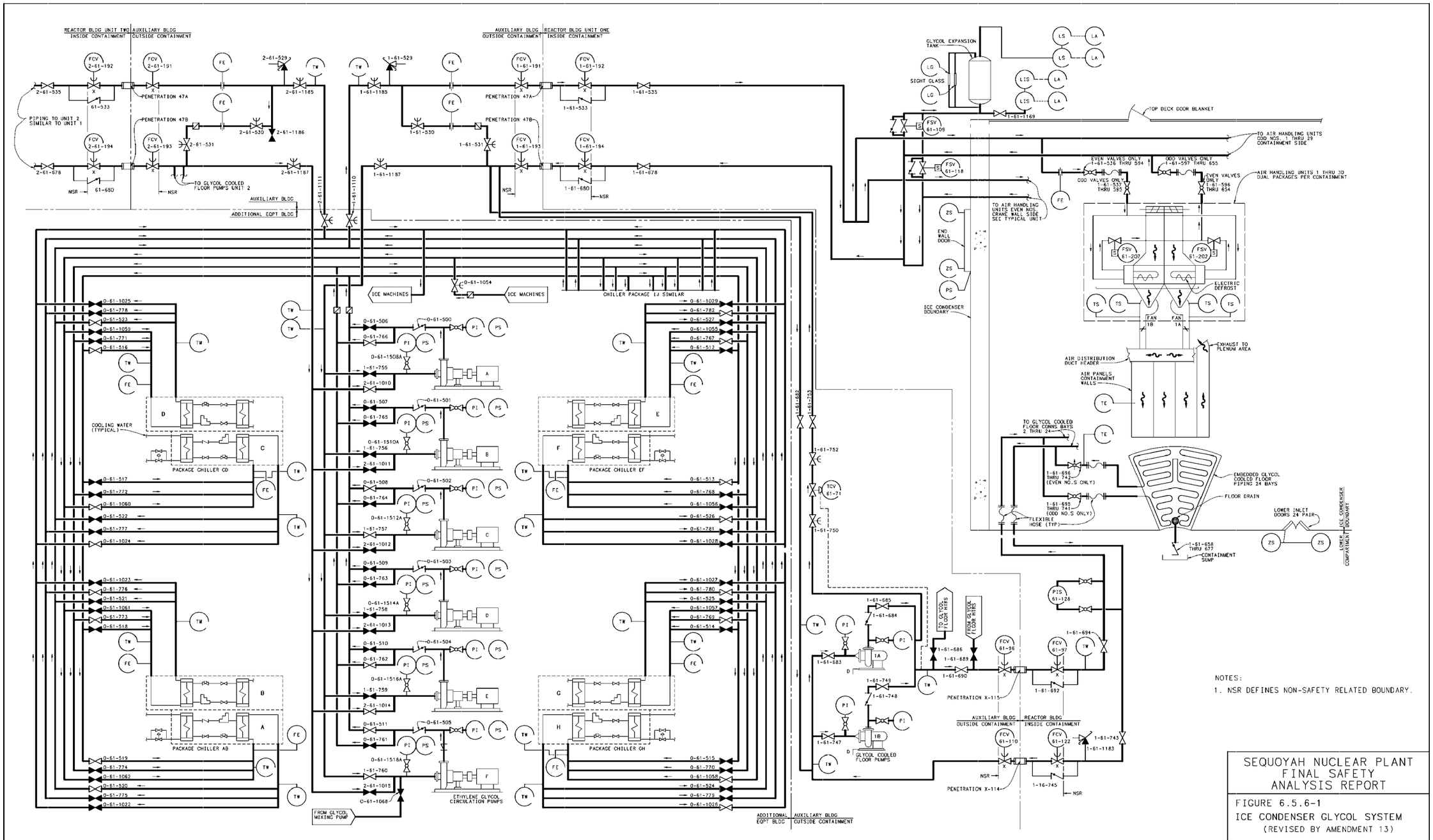

NOTES:

1. NSR DEFINES NON-SAFETY RELATED BOUNDARY.

SEQUOYAH NUCLEAR PLANT
FINAL SAFETY
ANALYSIS REPORT

FIGURE 6.5.6-1
ICE CONDENSER GLYCOL SYSTEM
(REVISED BY AMENDMENT 13)

DRAWING SERVICES UNIT
PROCAD MAINTAINED DRAWING
THIS CONFIGURATION CONTROL DRAWING IS MAINTAINED BY THE SQN CAD UNIT AND IS NOW PART OF THE TVA PROCADAM DATABASE.
COMPUTER GRAPHICS

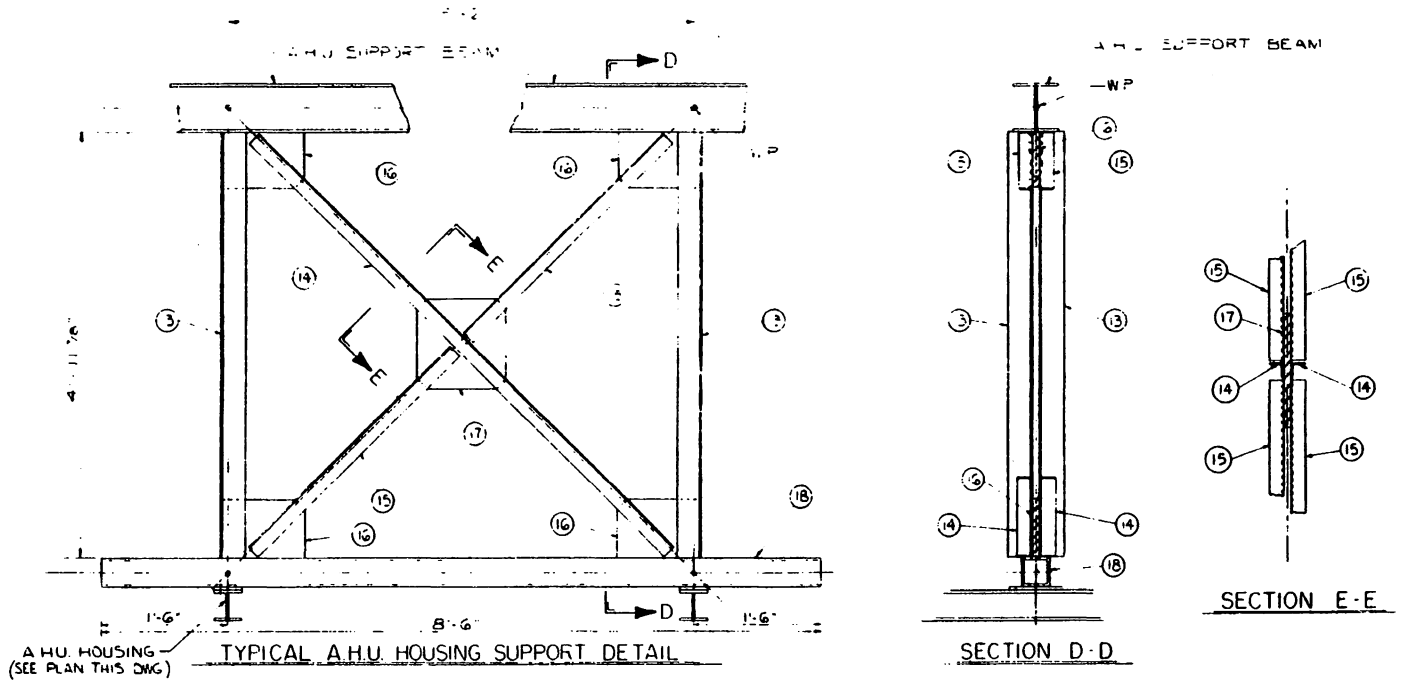

Figure 6.5.7-1 Air Handling Unit Support Structure

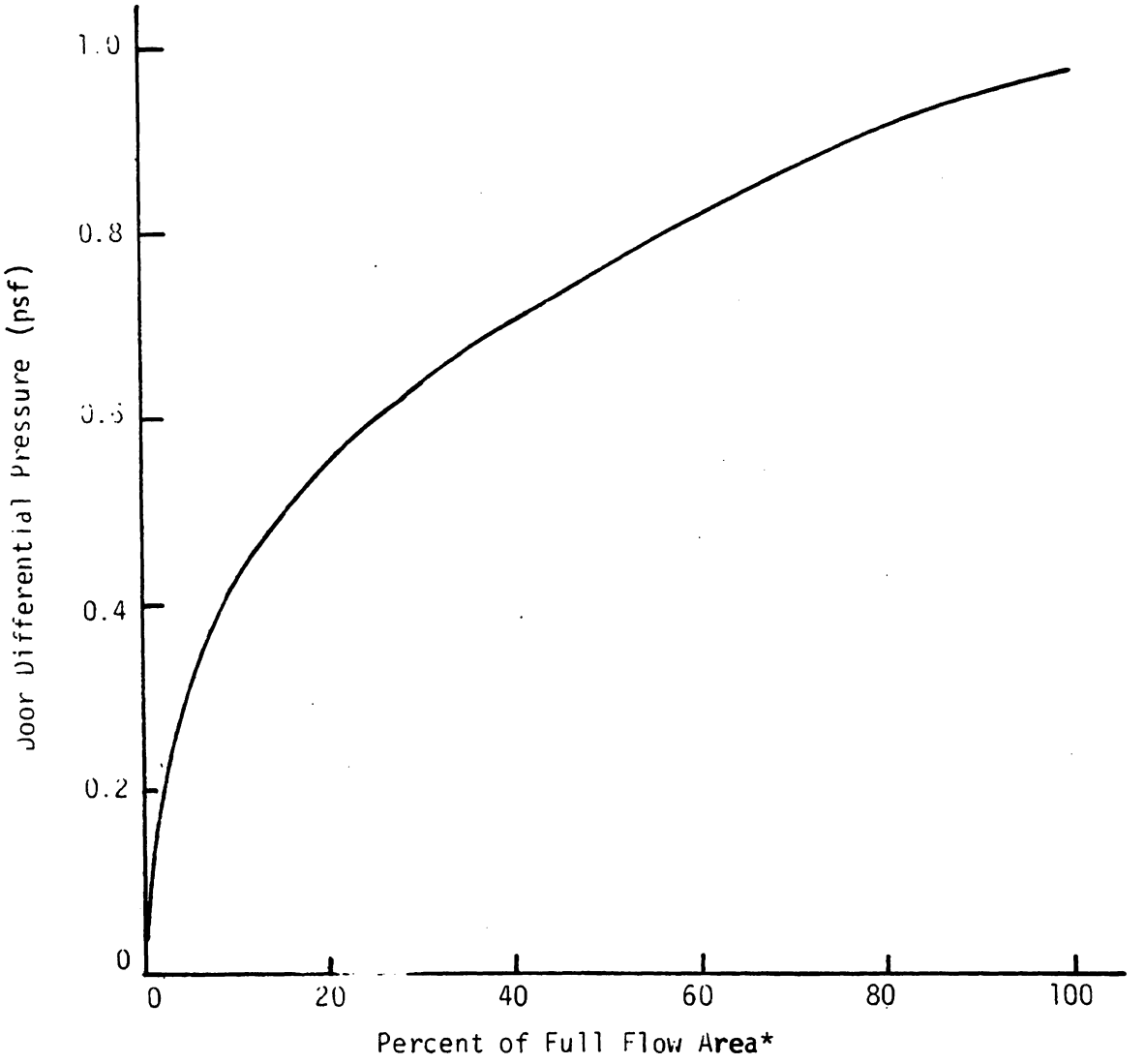

*Full Flow Area is defined as the minimum door port area with doors fully open

Figure 6.5.9-1 Flow Area- Pressure Differential

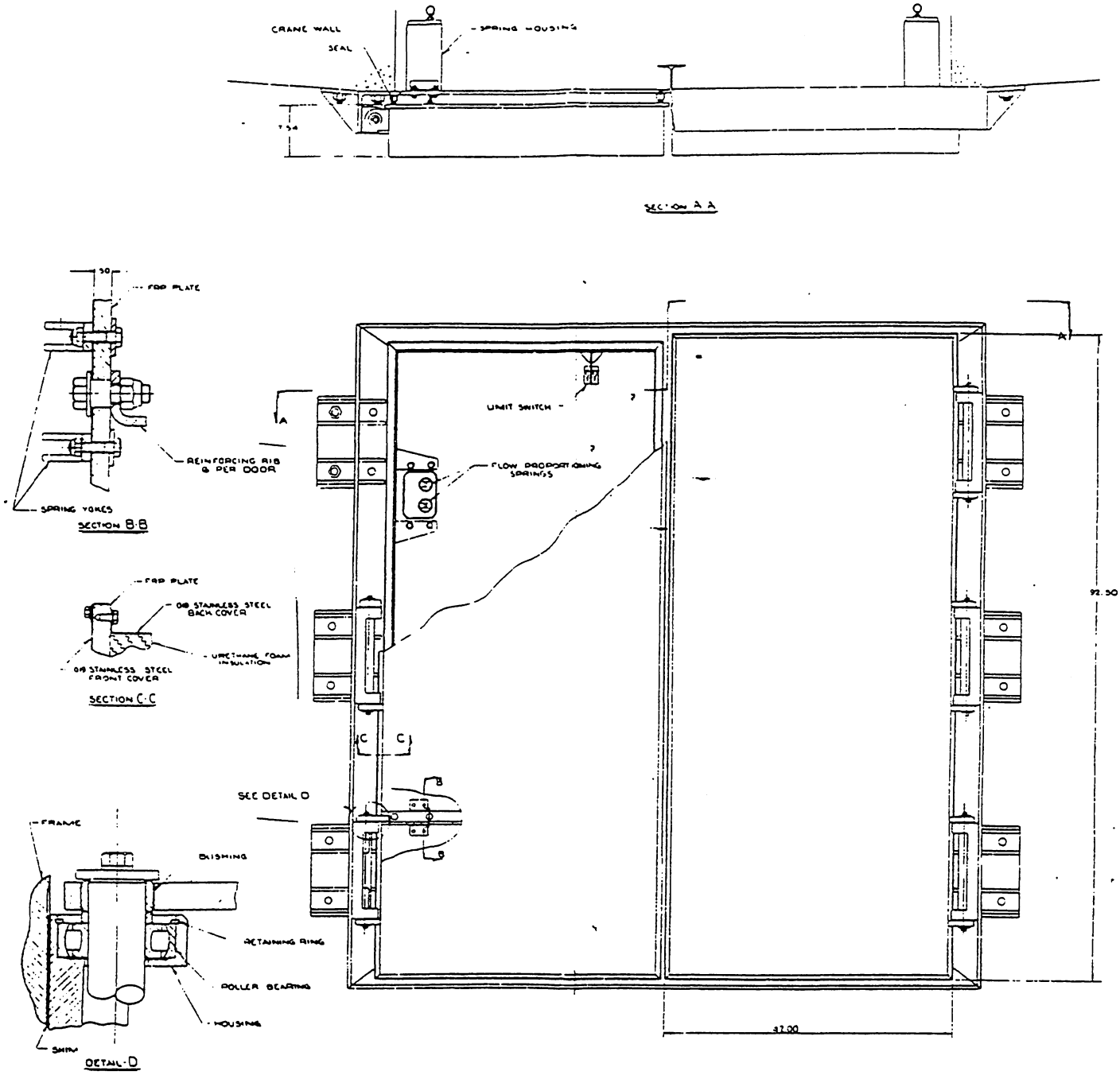

SEQUOYAH NUCLEAR PLANT
FINAL SAFETY
ANALYSIS REPORT

Figure 6.5.9-2
Lower Inlet Door Assembly
(REVISED BY AMENDMENT 13)

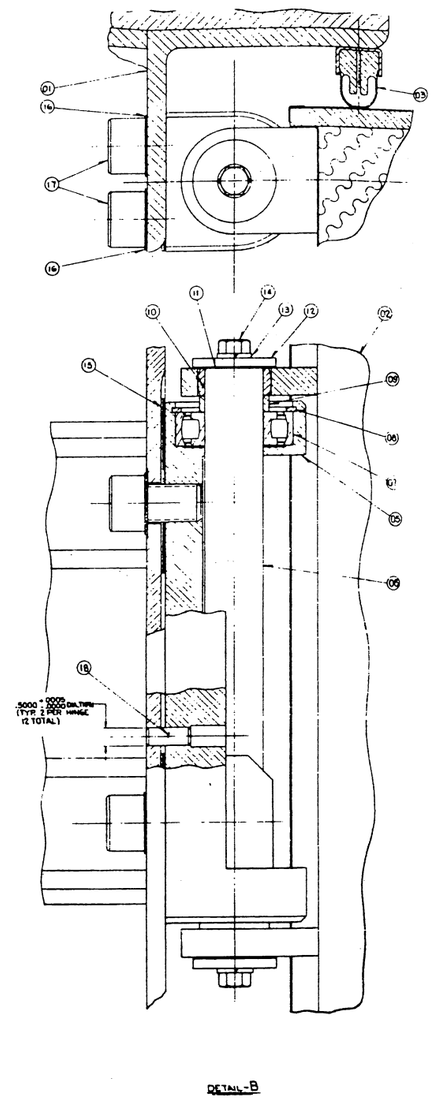

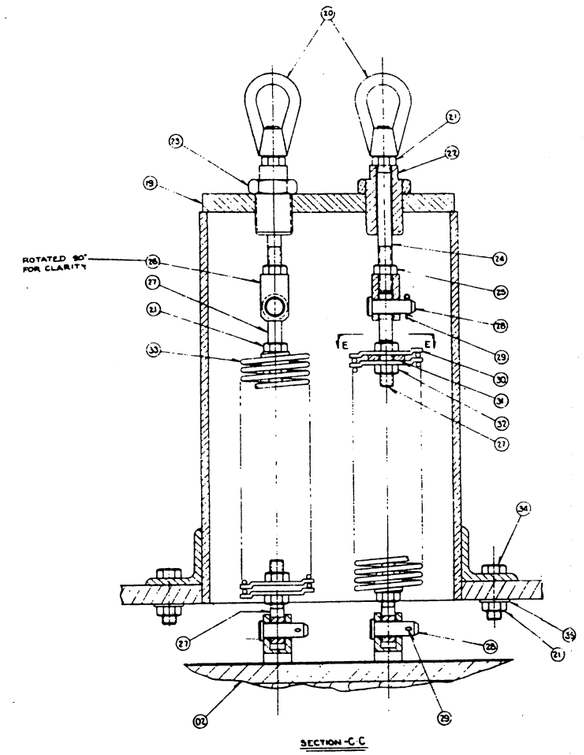

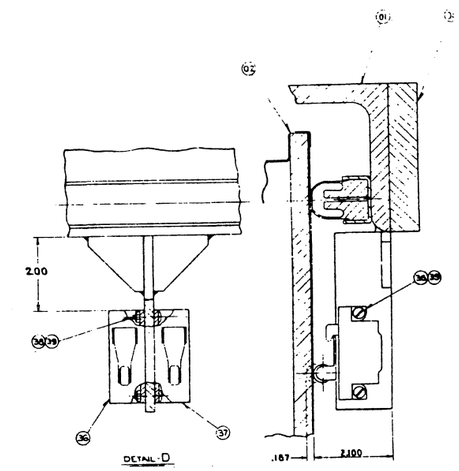

1. Door Frame Ass'y
2. Door Ass'y
3. Seal
4. Foam Gasket
5. Bearing Housing .
6. Shaft
7. Bearing
8. Retaining Ring
9. Spacer
10. Bushing
11. Spacer
12. Shaft Cap
13. .500 Lock Washer (Spring Type)
14. .500 - 13 UNC - Hex Bolt x 1.00 Lg.
15. Shim
16. 1.000 Lock Washer (External Tooth)
17. 1.000 - 8 UNC - Soc. Hd. Cap SCR x 1.500 Lg.
18. Dowel Pin .5003 +.0005 -.0002 Dia. x 1.000 Lg.
19. Spring Housing
20. Eye Nut - G-400 Size 2
21. .375 - 16 UNC - Hex Nut
22. Adj. Scr.
23. 1.000 - 12 UNF - Jam Nut
24. .375 Dia. Stud Thd. Both Ends . .375 - 16 UNC x 1.500 Lg.
25. .375 - 16 UNC Jam Nut
26. Clevis
27. Rod End #RE-376
28. Clevis Pin #PN-37
29. Cotter Pin .093 Dia. x .625 Lg.
30. Spring Clip
31. Washer 1.000 O.D. x .437 I.D. x .090 Thk.
32. Spring Clip Ass'y
33. Spring
34. .375-16 UNC Hex Bolt x 1.25 Lg.
35. .375 Std. Washer
36. Switch #CS 31 .
37. Switch #CS 32
38. 6-32 UNC Rd. Hd. SCR x .50 Lg.
39. 6-32 UNC Hex Unit

Figure 6.5.9-3 Details of Lower Inlet Door Showing Hinge, Proportioning Mechanism Limit Switches and Seals

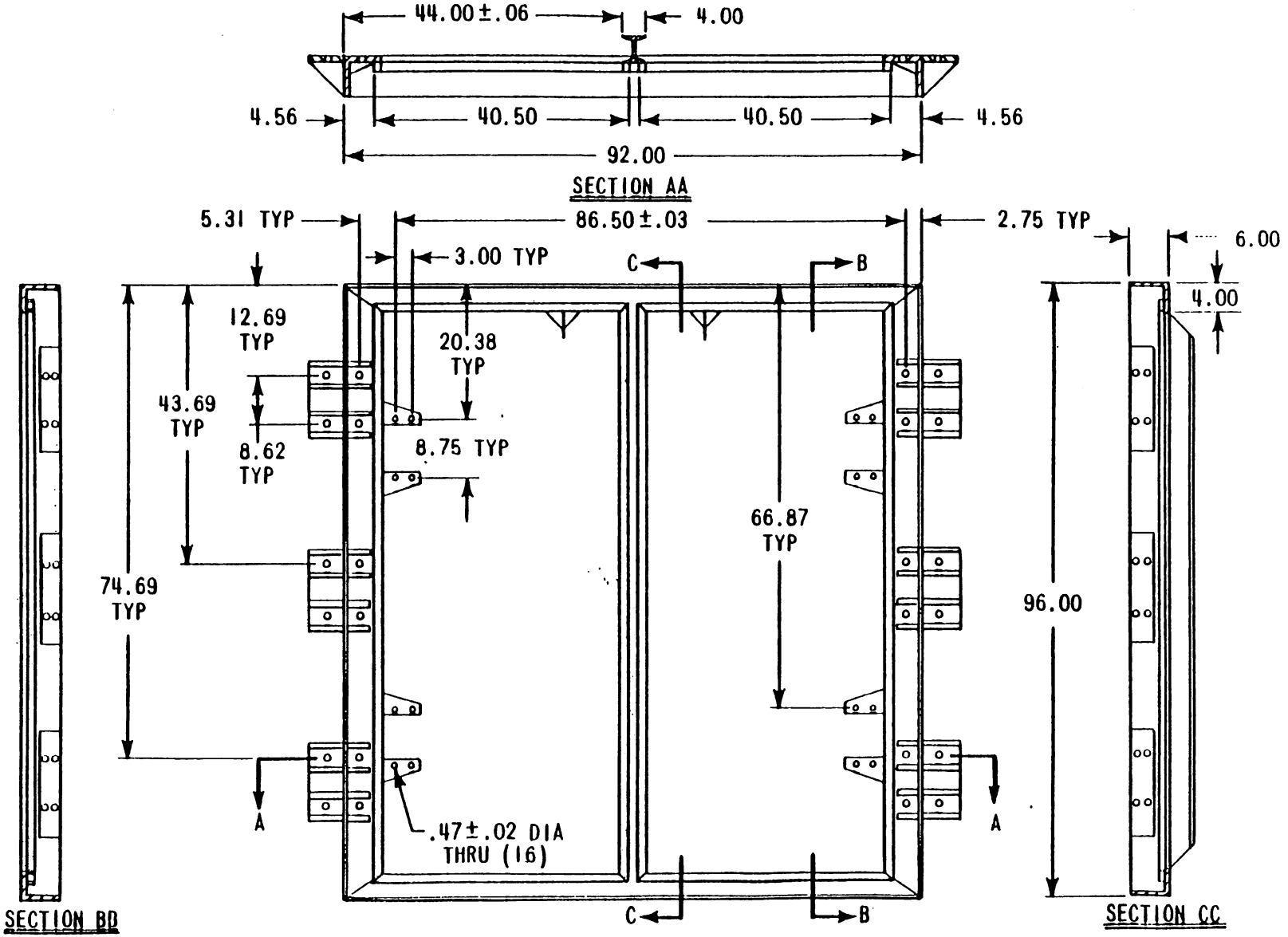

Figure 6.5.9-4 Inlet Door Frame Assembly

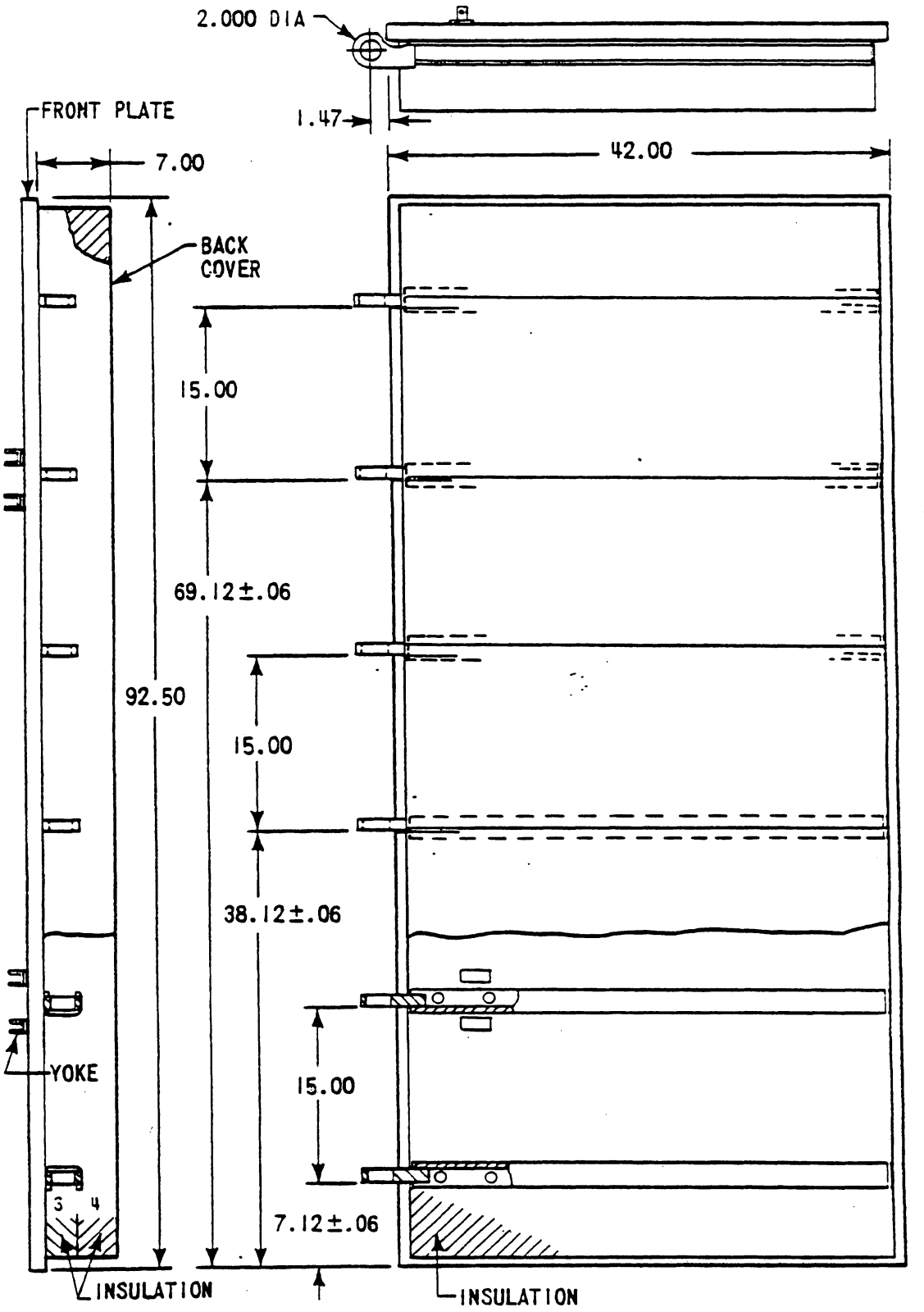

Figure 6.5.9-5 Inlet Door Panel Assembly

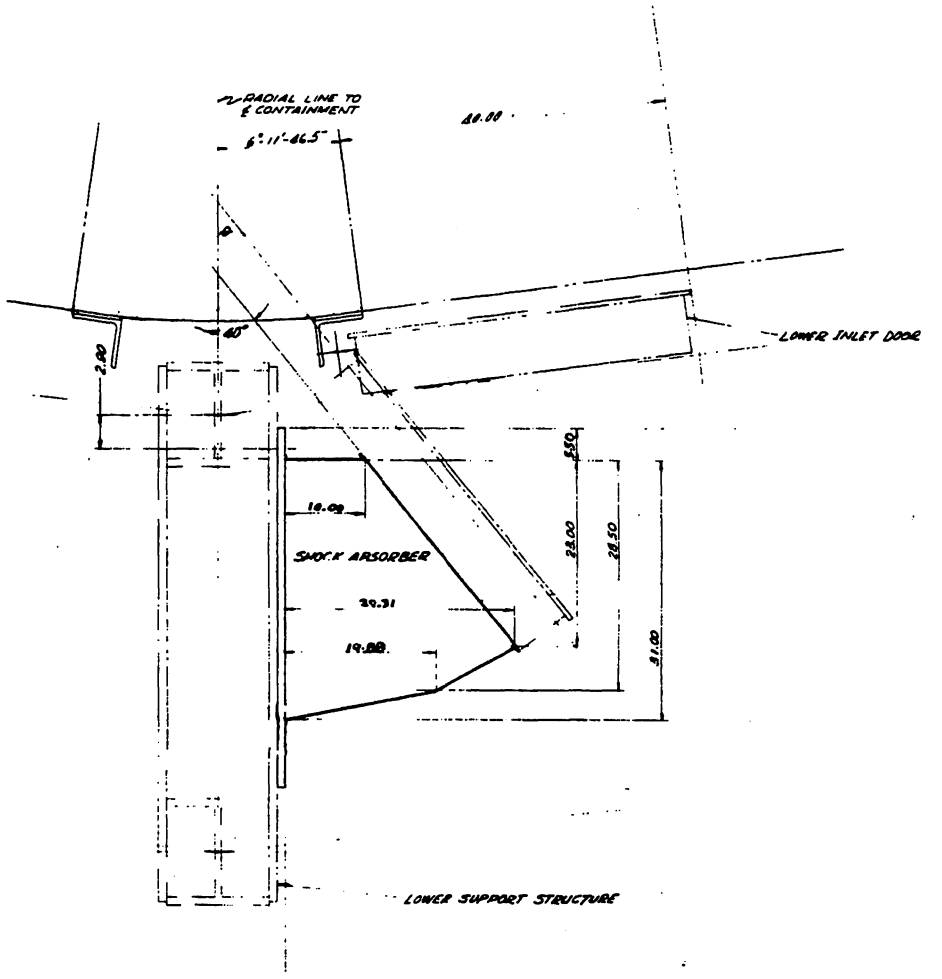

Figure 6.5.9-6 Lower Inlet Door Shock Absorber Assembly

Best Available Historical Image

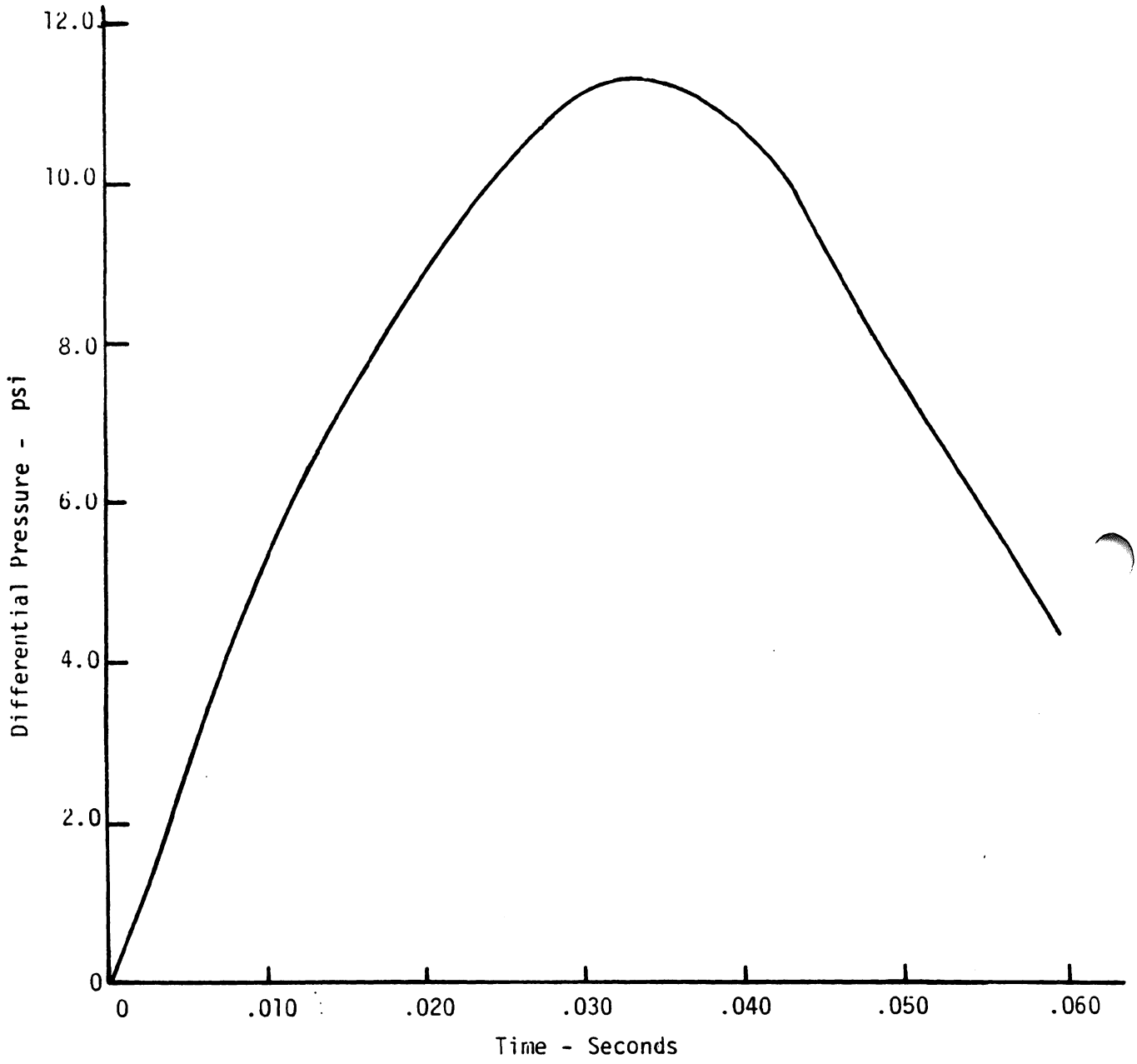

Figure 6.5.9-7 Lower Inlet Door Differential Pressure - Time History

NOTE: FOR DESIGN PURPOSES A 40% MARGIN SHALL BE APPLIED TO THE DIFFERENTIAL PRESSURE GIVEN IN THIS TABLE (REF. TO TABLE 6.5.9-1)

REVISED BY AMENDMENT 6.

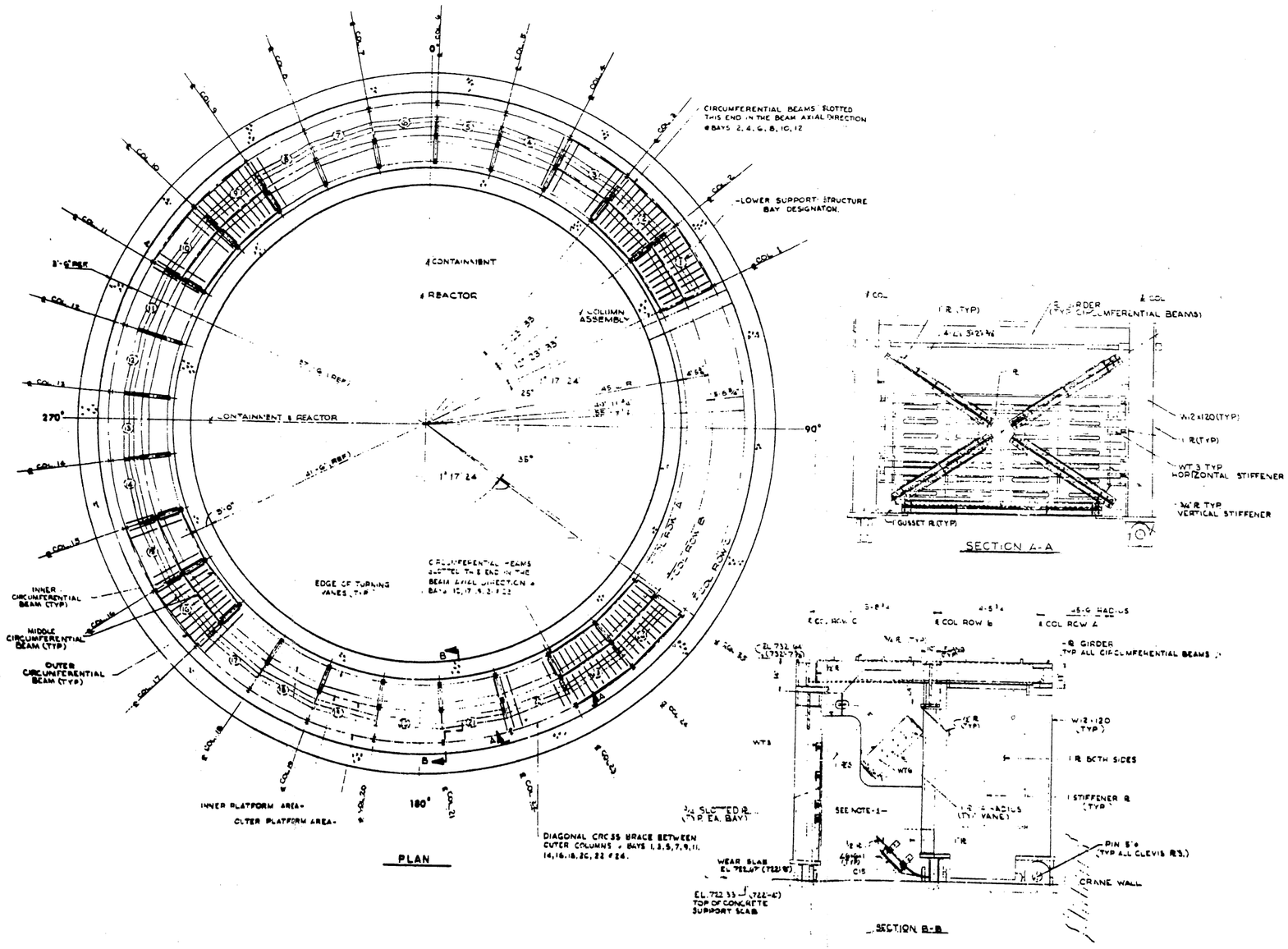

Figure 6.5.10-1 Lower Support Structure Support Floor Embedments

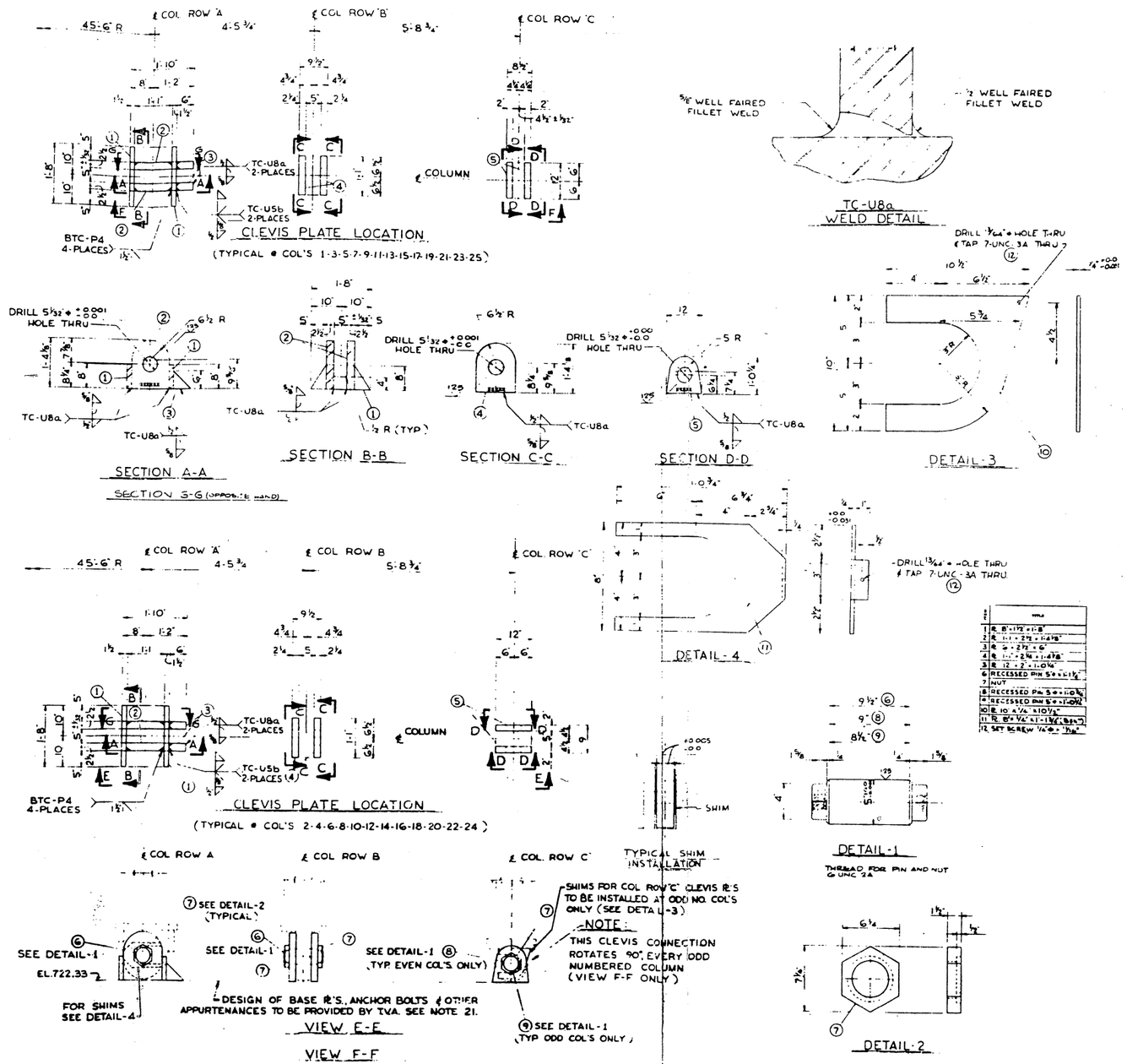

Figure 6.5.10-2 Lower Support Structure Details

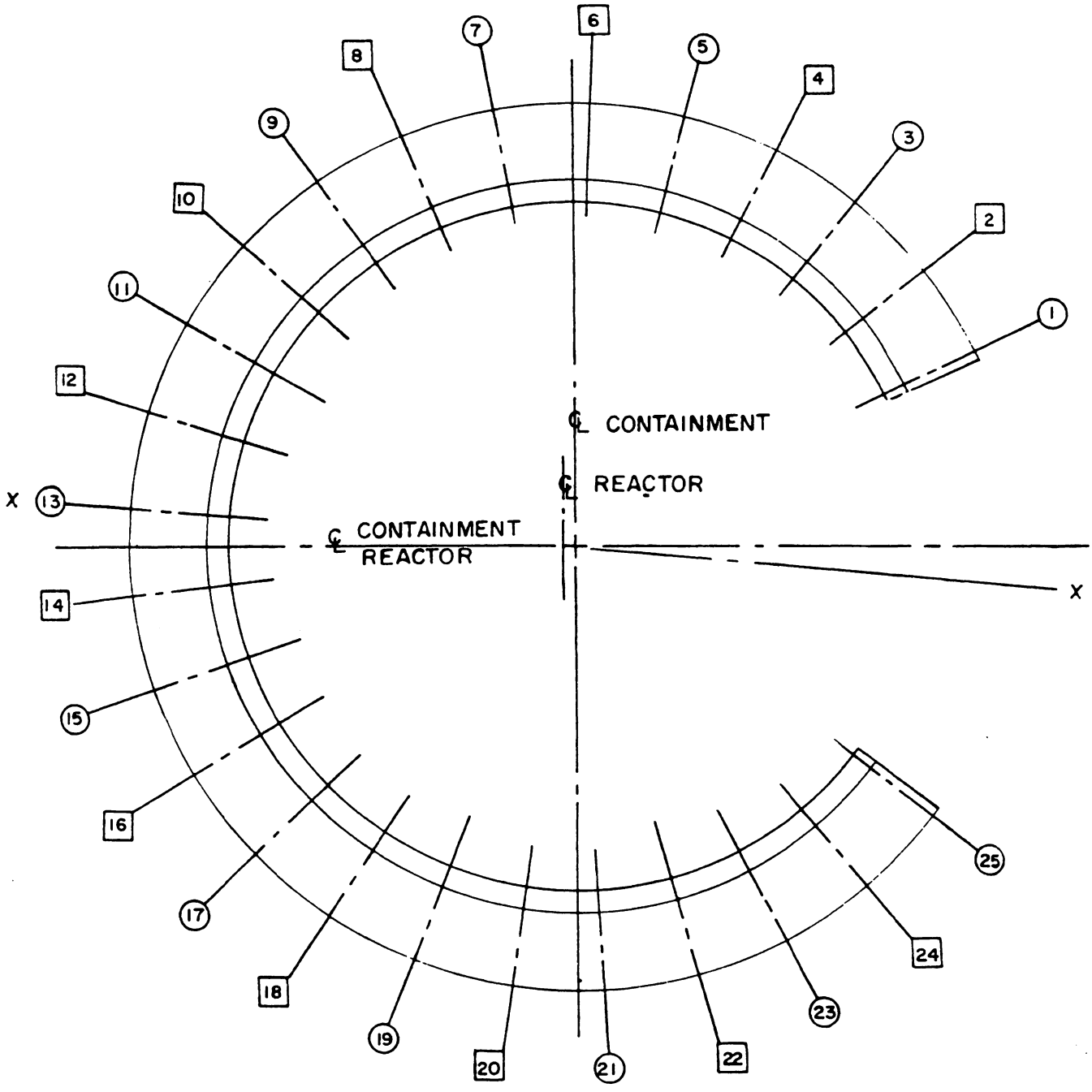

(1) COLUMN LINES WITH OUTER BASES RESTRAINED (UR, UΘ, UZ = 0)

[2] COLUMN LINES WITH OUTER BASES FREE IN CIRCUMFERENTIAL DIRECTION (UR, UZ = 0)

Figure 6.5.10-3 Schematic of Ice Condenser Support Floor

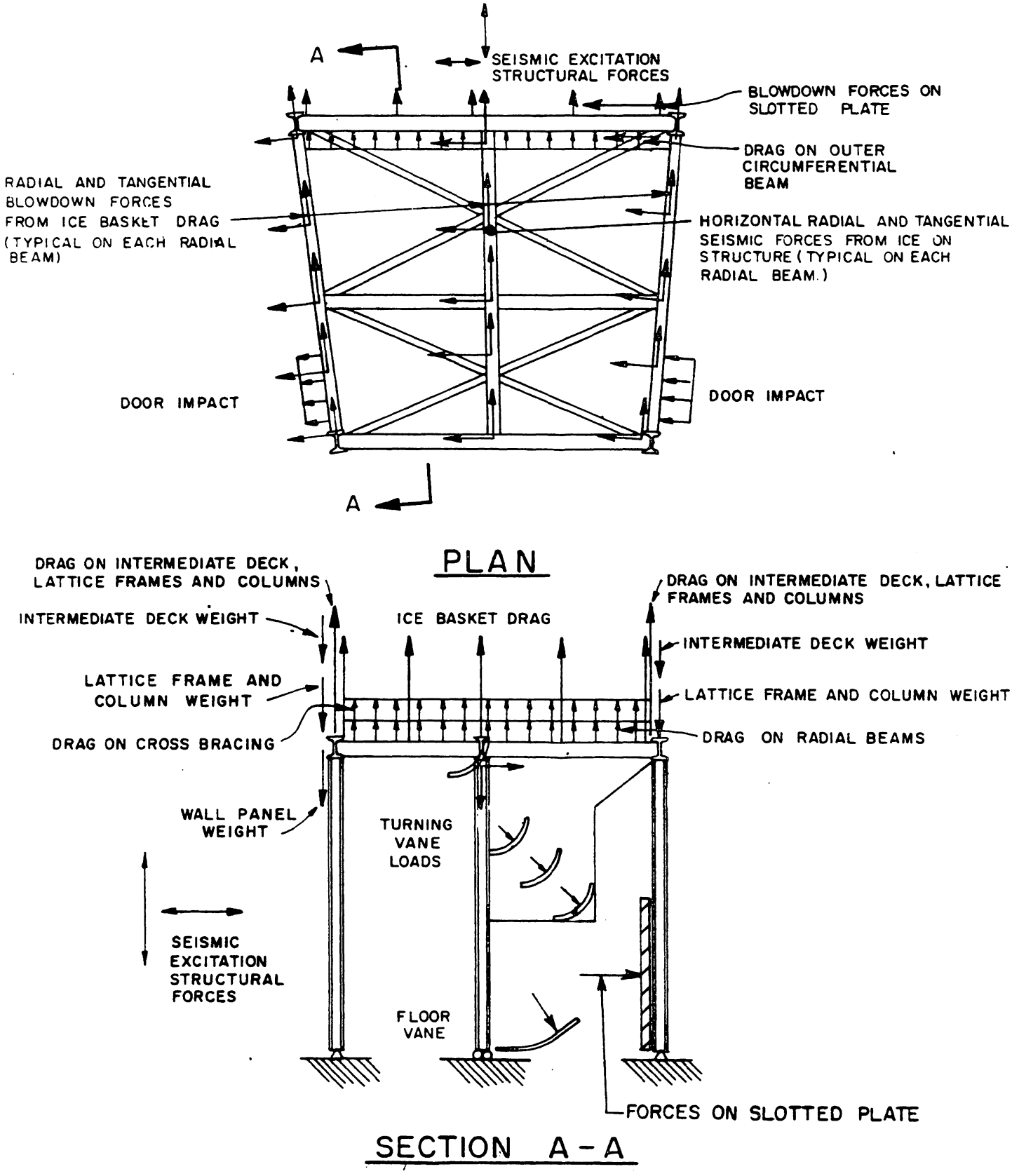

Figure 6.5.10-4 Schematic Diagrams of Forces Applied to Three Pier Lower Support Structure

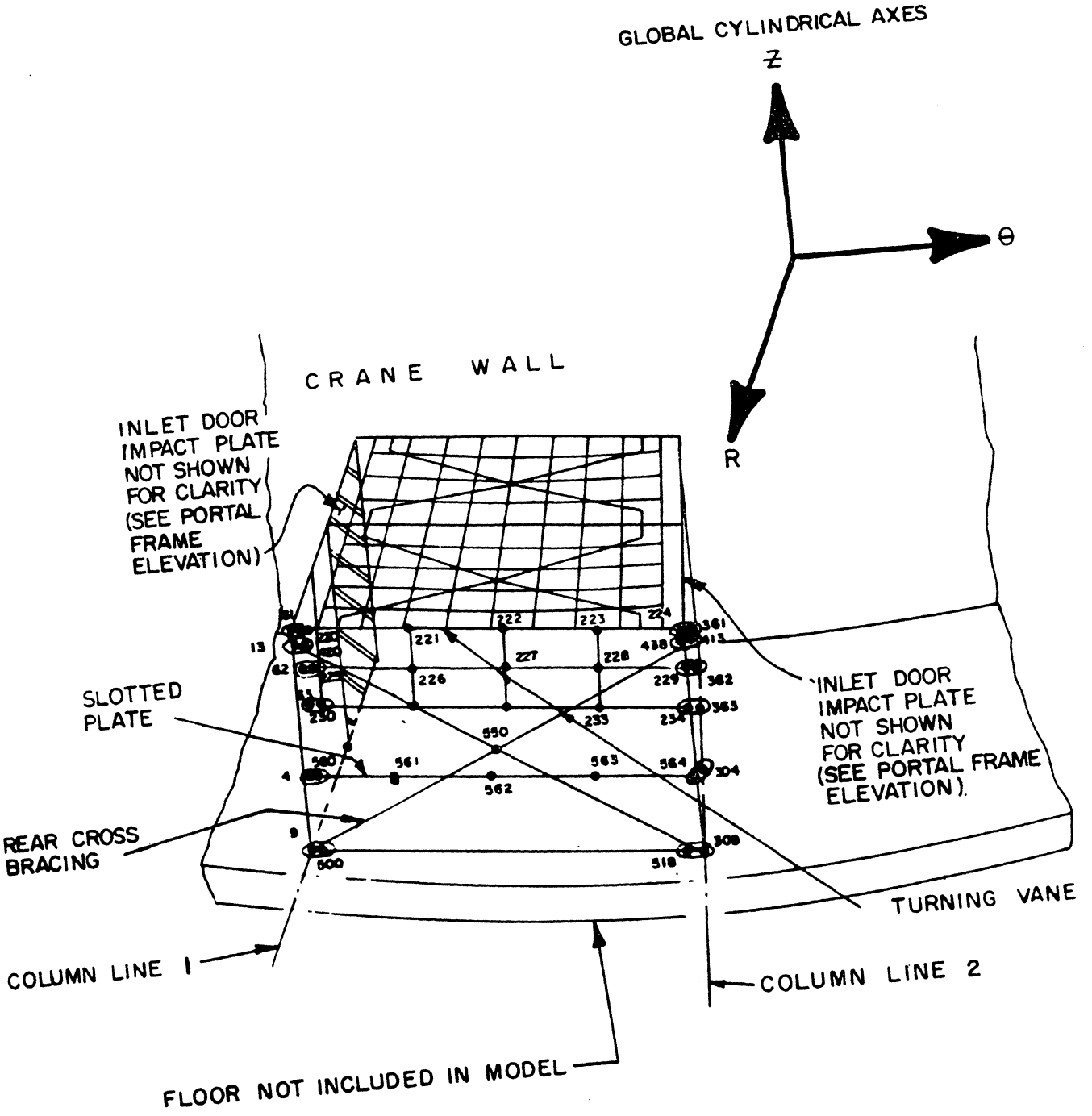

Figure 6.5.10-5 Lower Support Structure Three Pier Finite Element Model

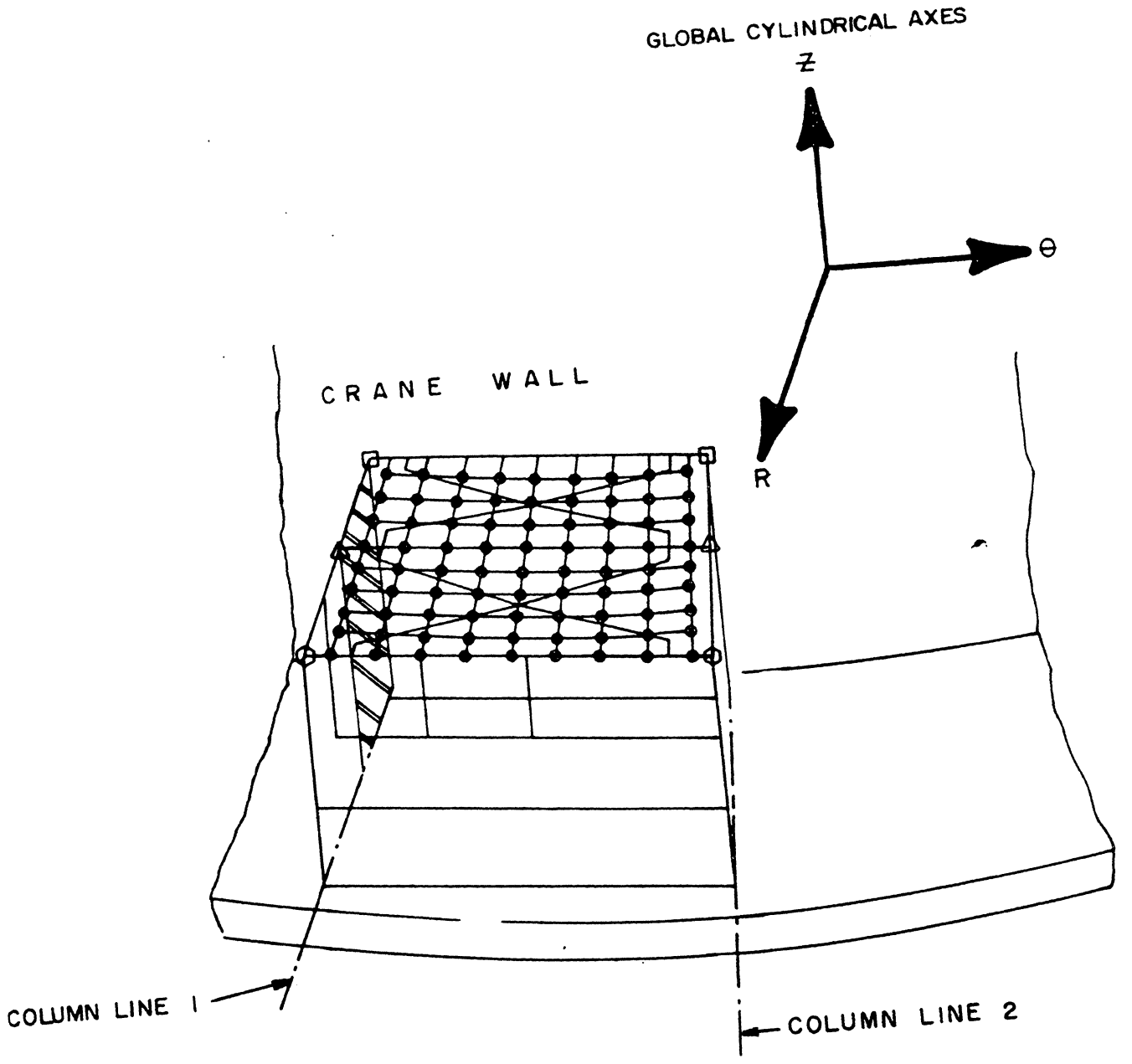

LEGEND

ADJACENT BAY MASS

□ 27 M/4

△ 81 M/4

○ 54 M/4

MASS DISTRIBUTION ON EACH RADIAL BEAM

● – M

NOTE: M = TOTAL MASS OF ONE ICE BASKET = 5.18 $\frac{\#\ SEC.^2}{IN.}$

Figure 6.5.10-6 Mass Distribution Three Pier Finite Element Model

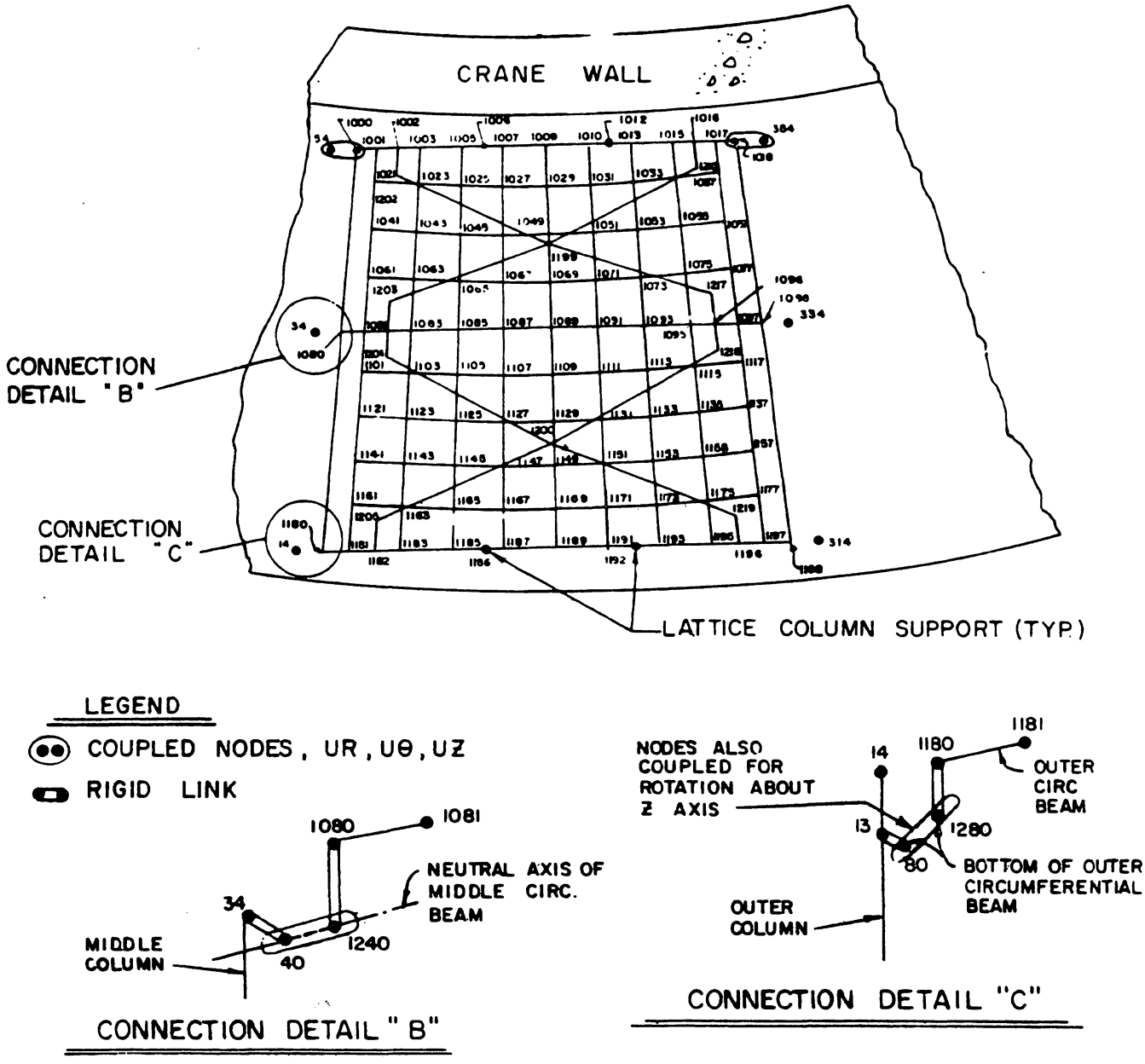

Figure 6.5.10-7 Lower Support Structure Three Pier Finite Element Model Platform Plan

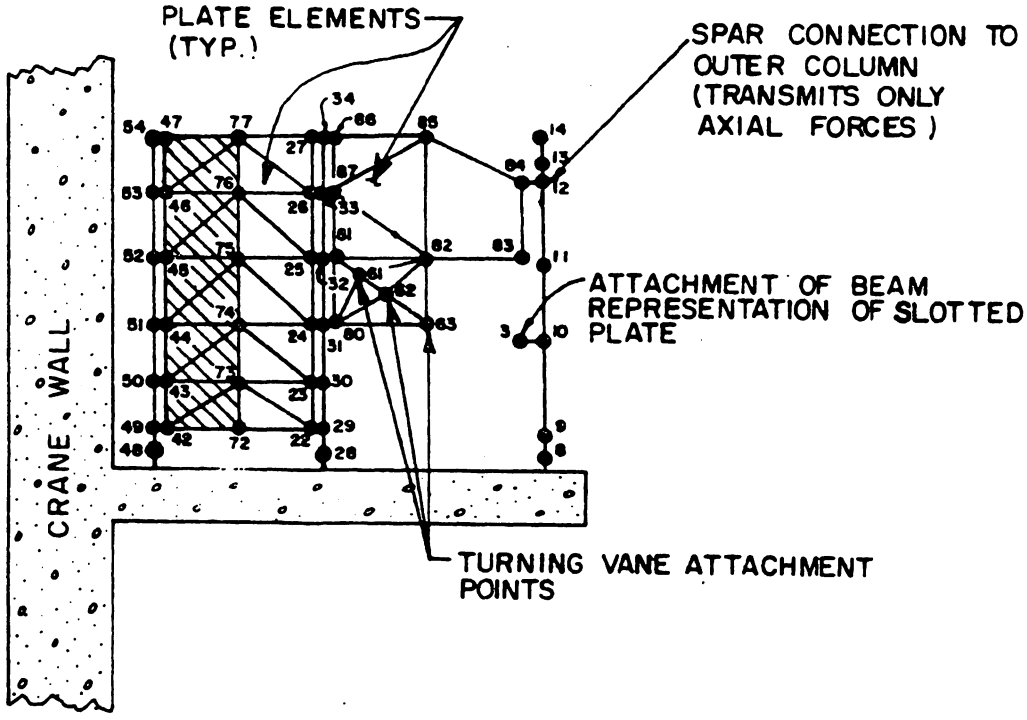

NOTE:

COLUMN LINE 1 NODE NUMBERS SHOWN

COLUMN LINE 2 NODE NUMBERS - ADD 300 TO THOSE SHOWN

AREA OVER WHICH DOOR IMPACT LOAD IS APPLIED

Figure 6.5.10-8 Lower Support Structure Three Pier Finite Element Model Portal Frame Elevation

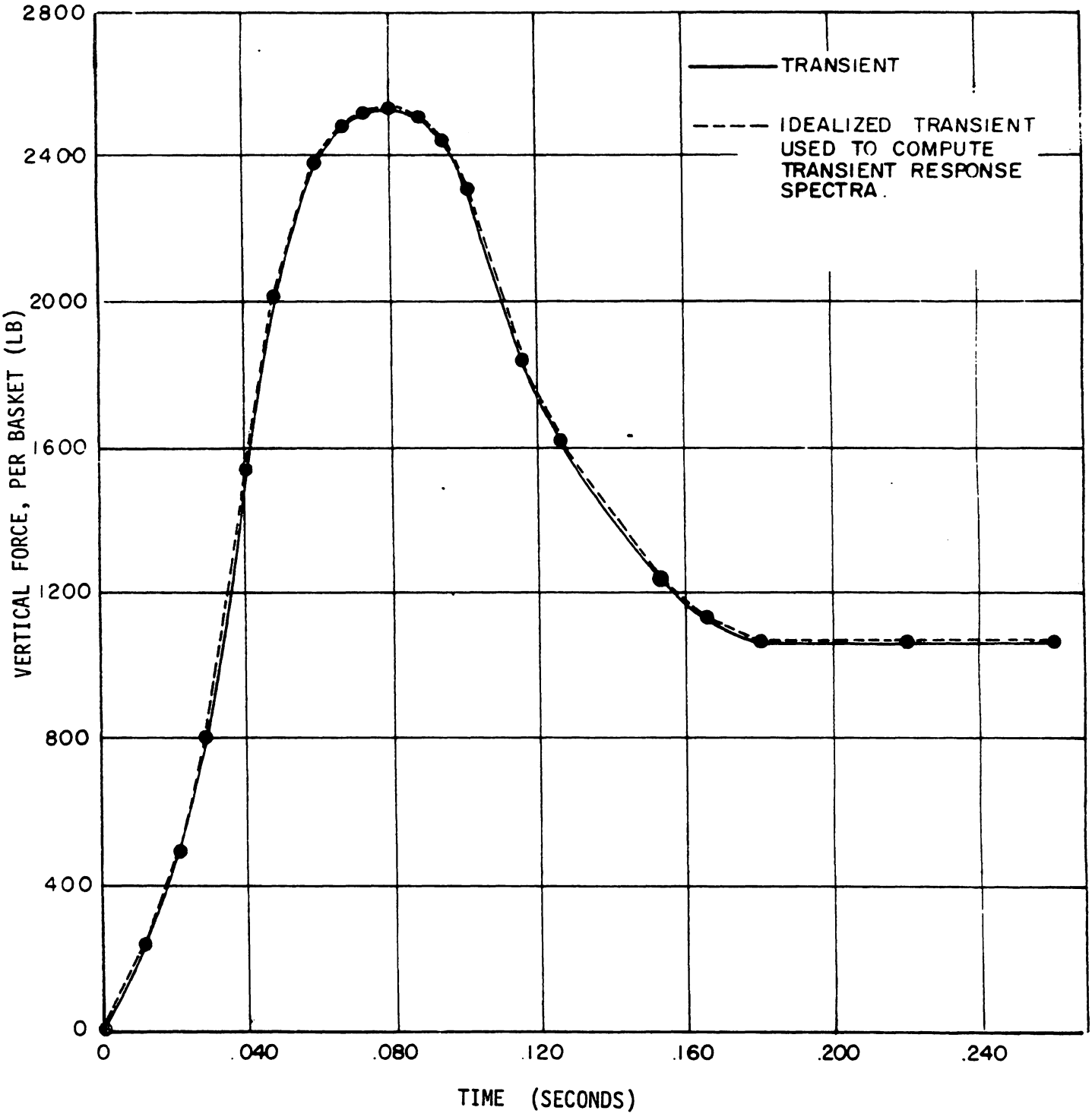

Figure 6.5.10-9 Ice Basket Uplift Force Transient

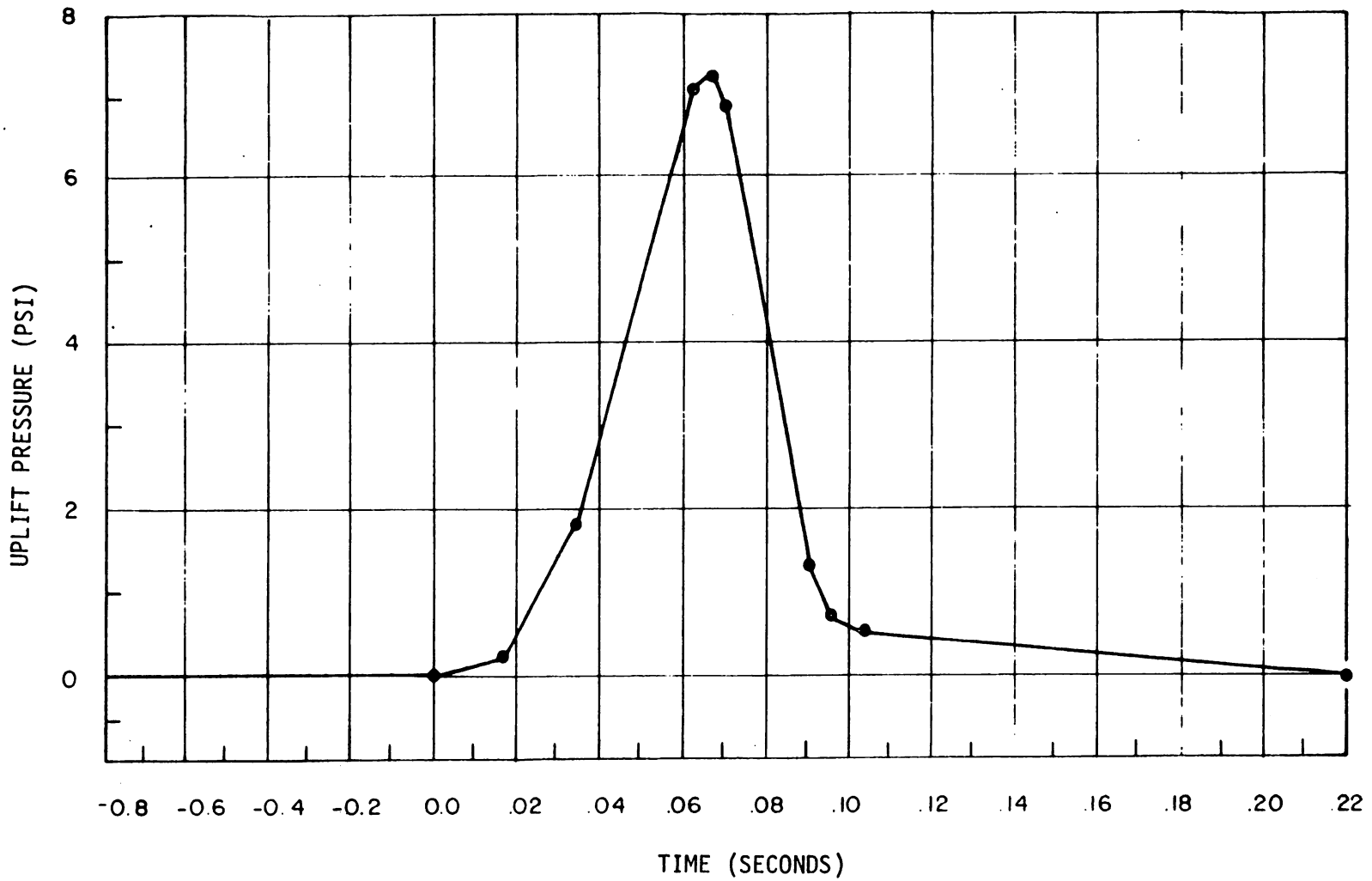

Figure 6.5.10-10 Drag Pressure Uplift Across Intermediate Deck

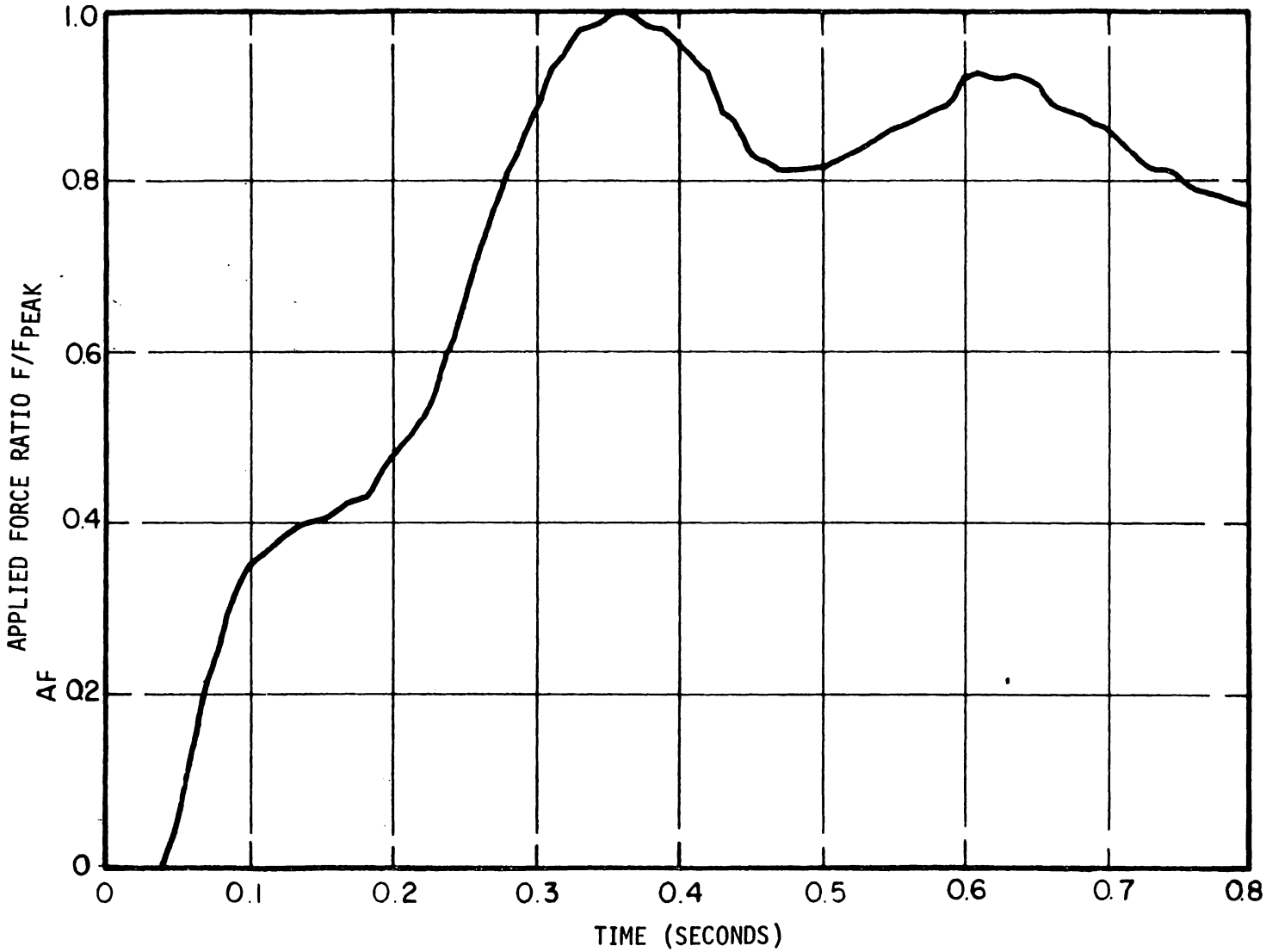

Figure 6.5.10-11 Force Transient Cold Leg Break

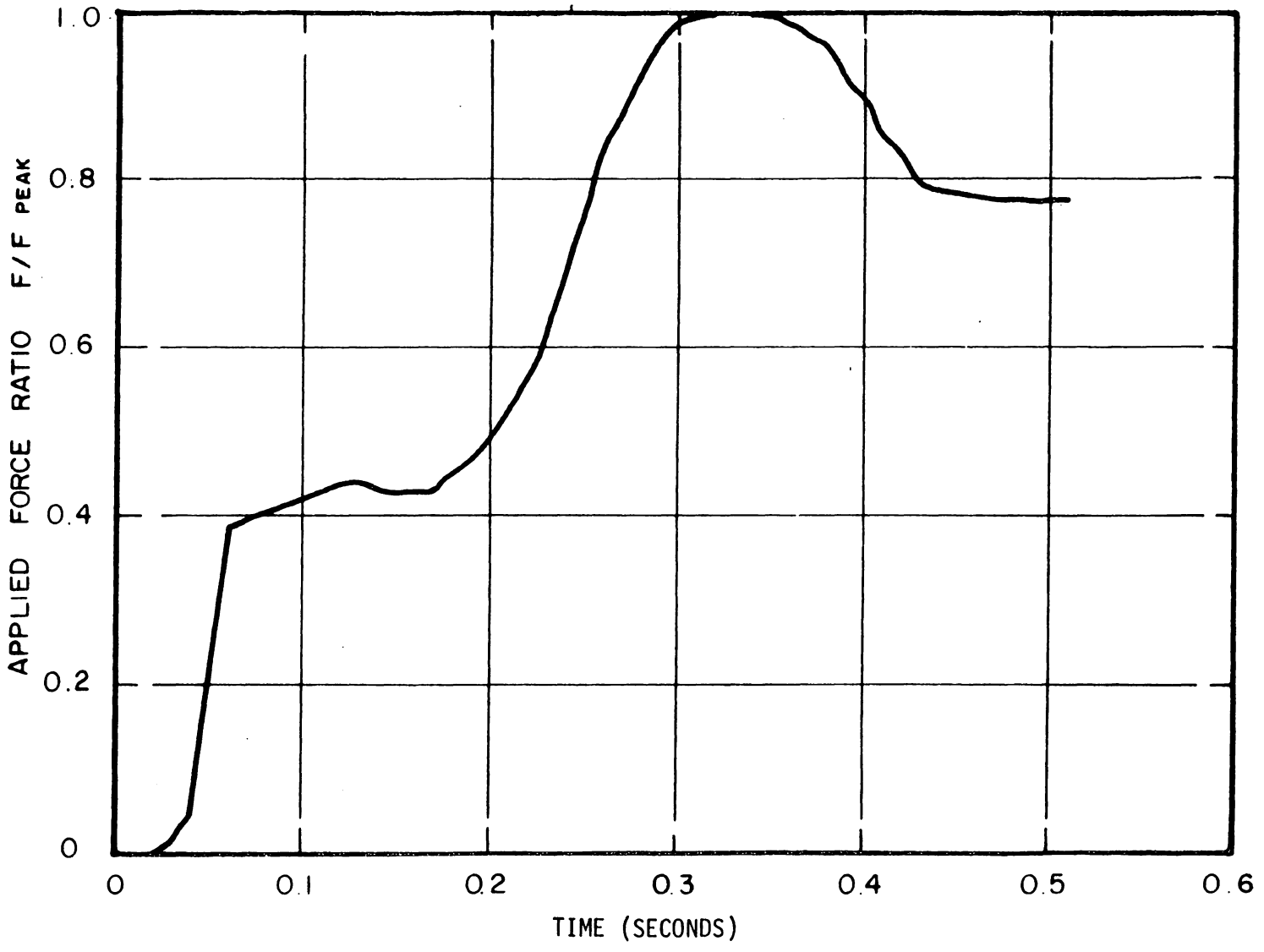

Figure 6.5.10-12 Force Transient Hot Leg Break

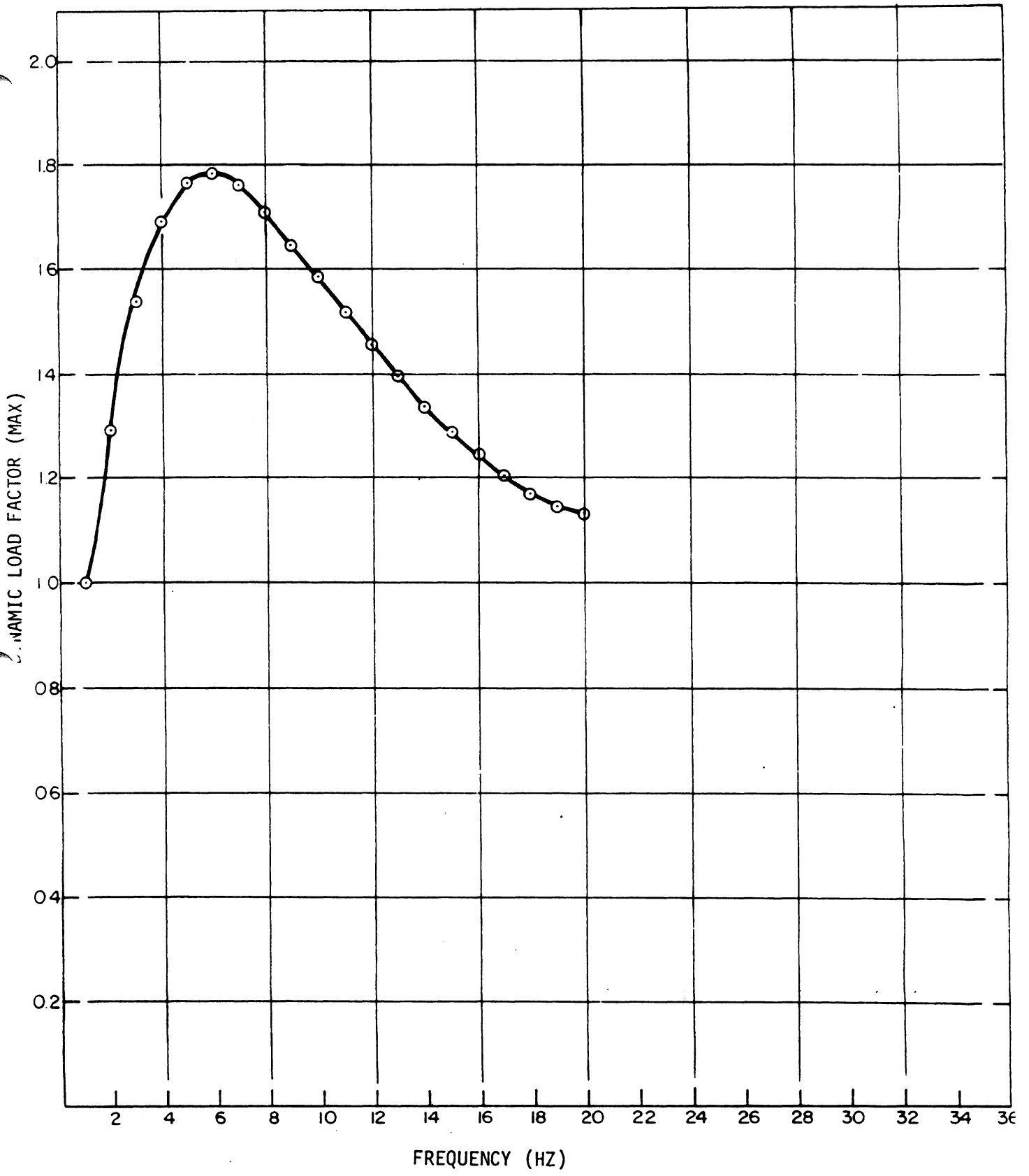

Figure 6.5.10-13 Transient Response Spectra Vertical Blowdown Uplift Forces

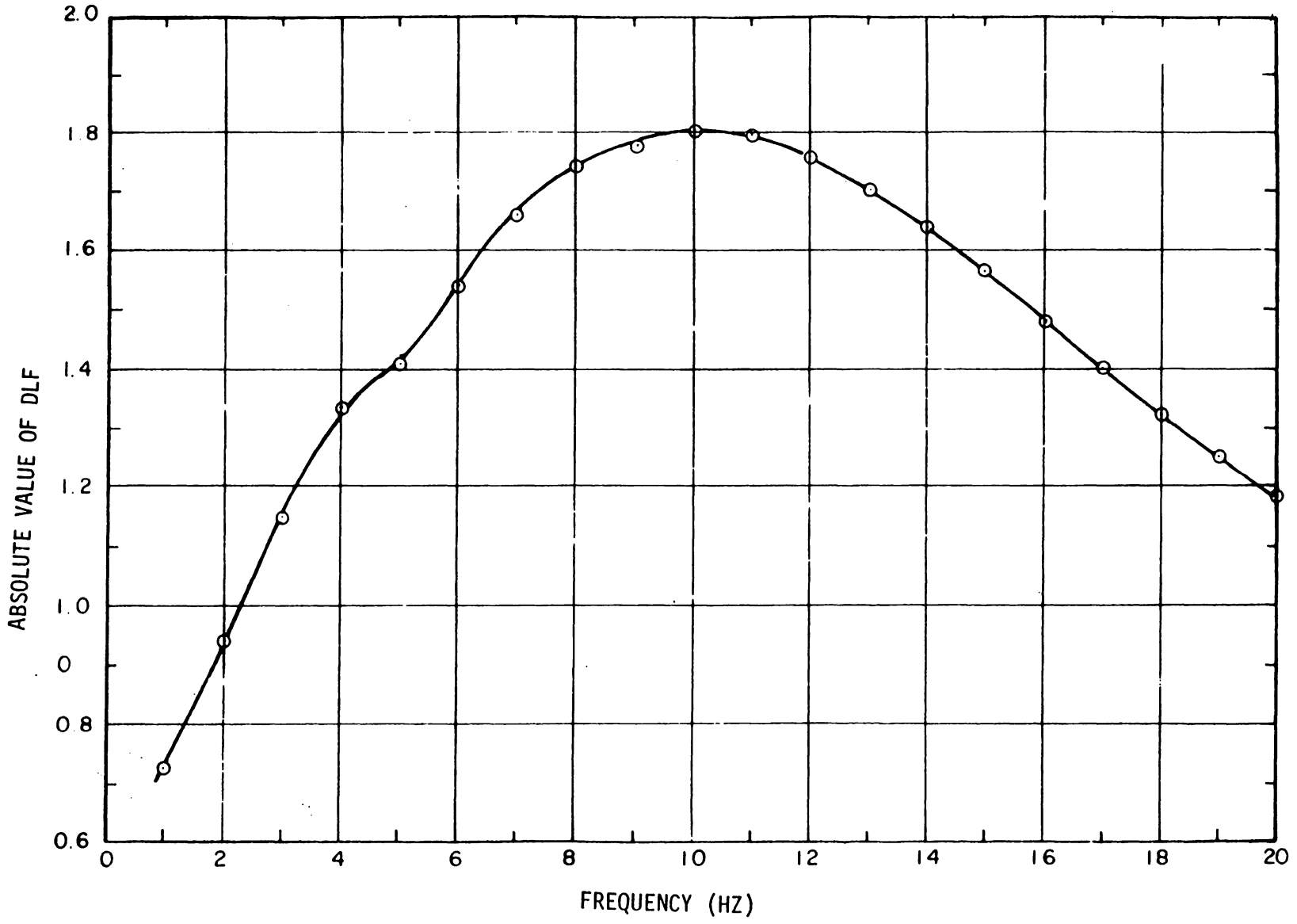

Figure 6.5.10-14 Transient Response Spectra Pressure Across Intermediate Deck

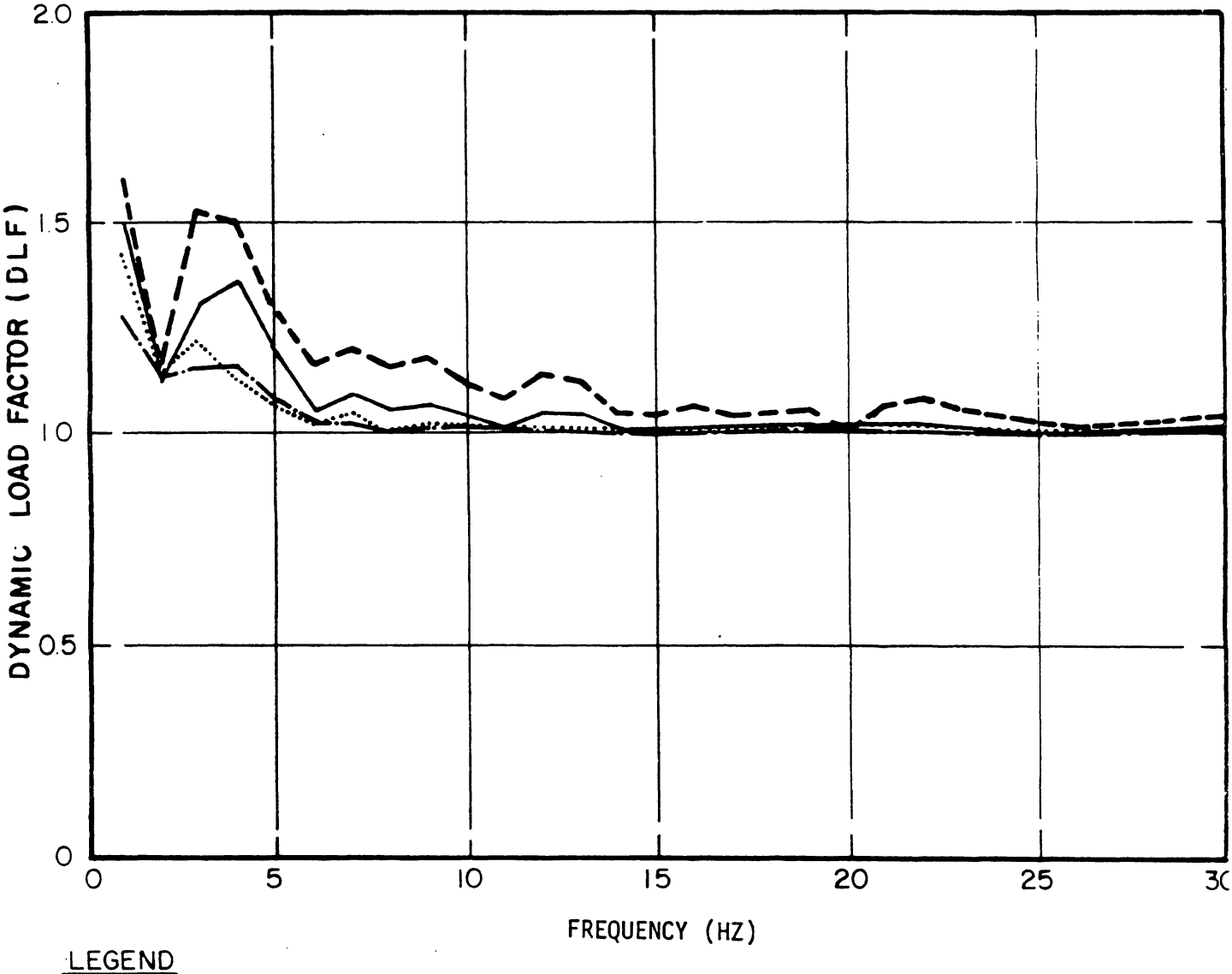

LEGEND

- - - - - -	0 %	CRITICAL	DAMPING
————	5 %	"	"
.....	10 %	"	"
—·—·—	20%	"	"

Figure 6.5.10-15 DLF Spectra Cold Leg Break Force Transient

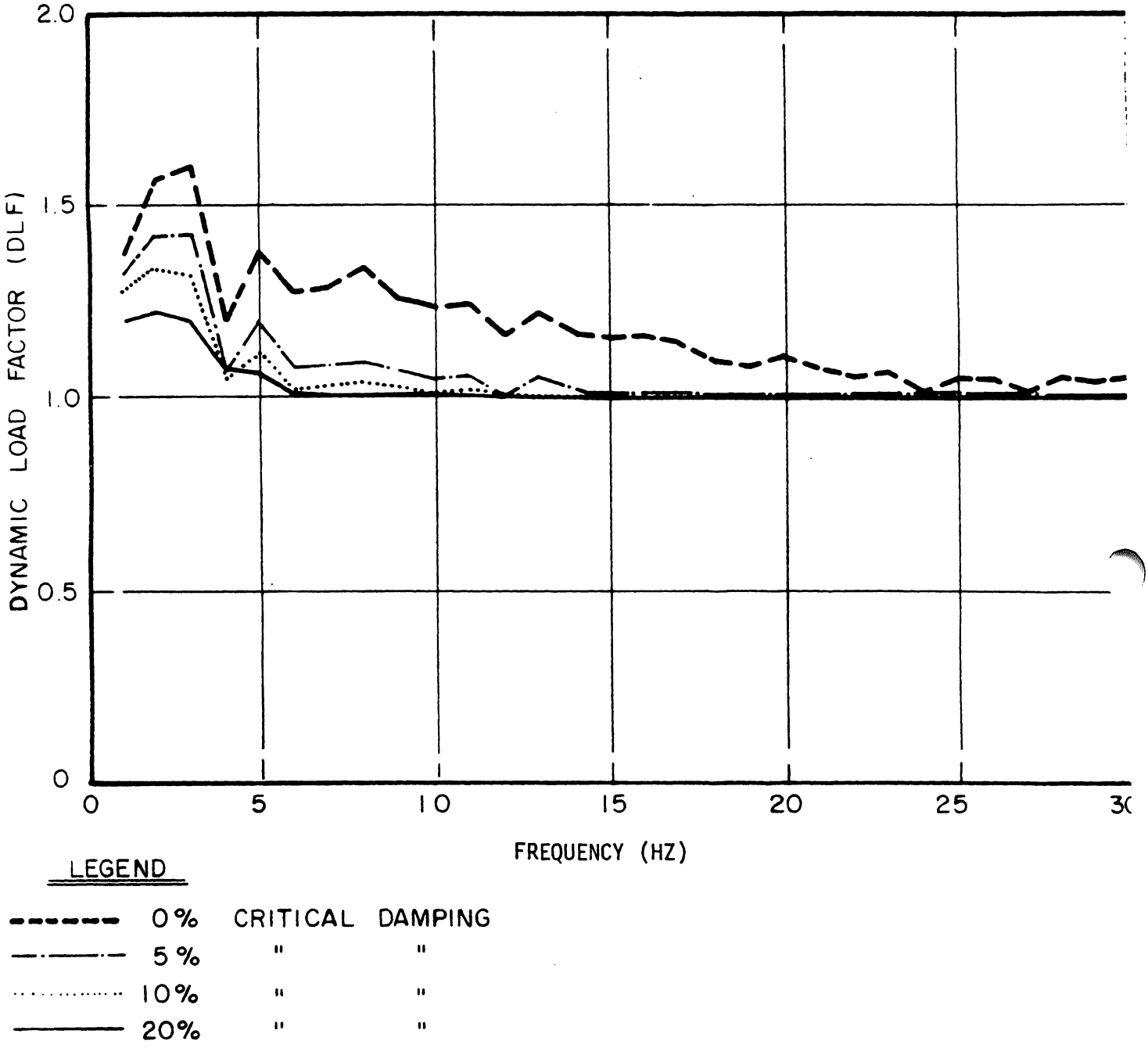

Figure 6.5.10-16 DLF Spectra Hot Leg Break Force Transient

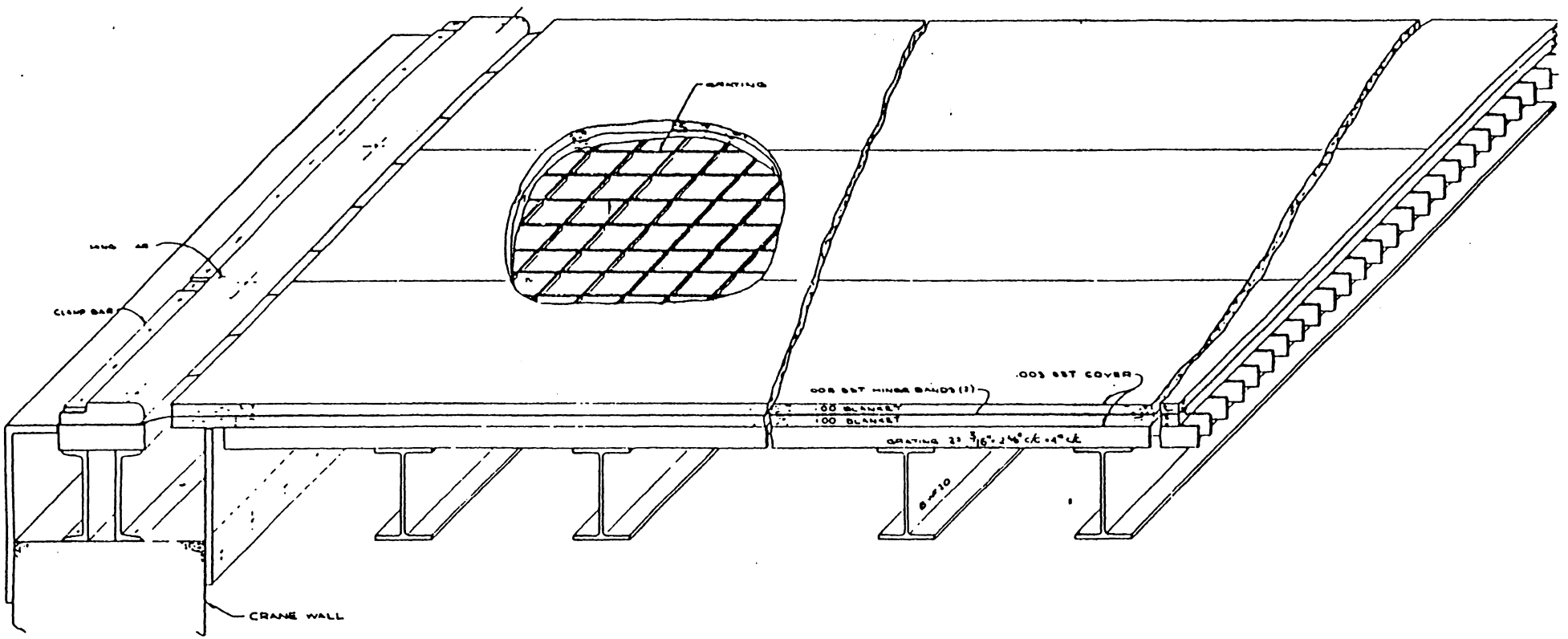

FIGURE 6.5.11-1

TOP DECK TEST ASSEMBLY

REVISED BY AMENDMENT 6.

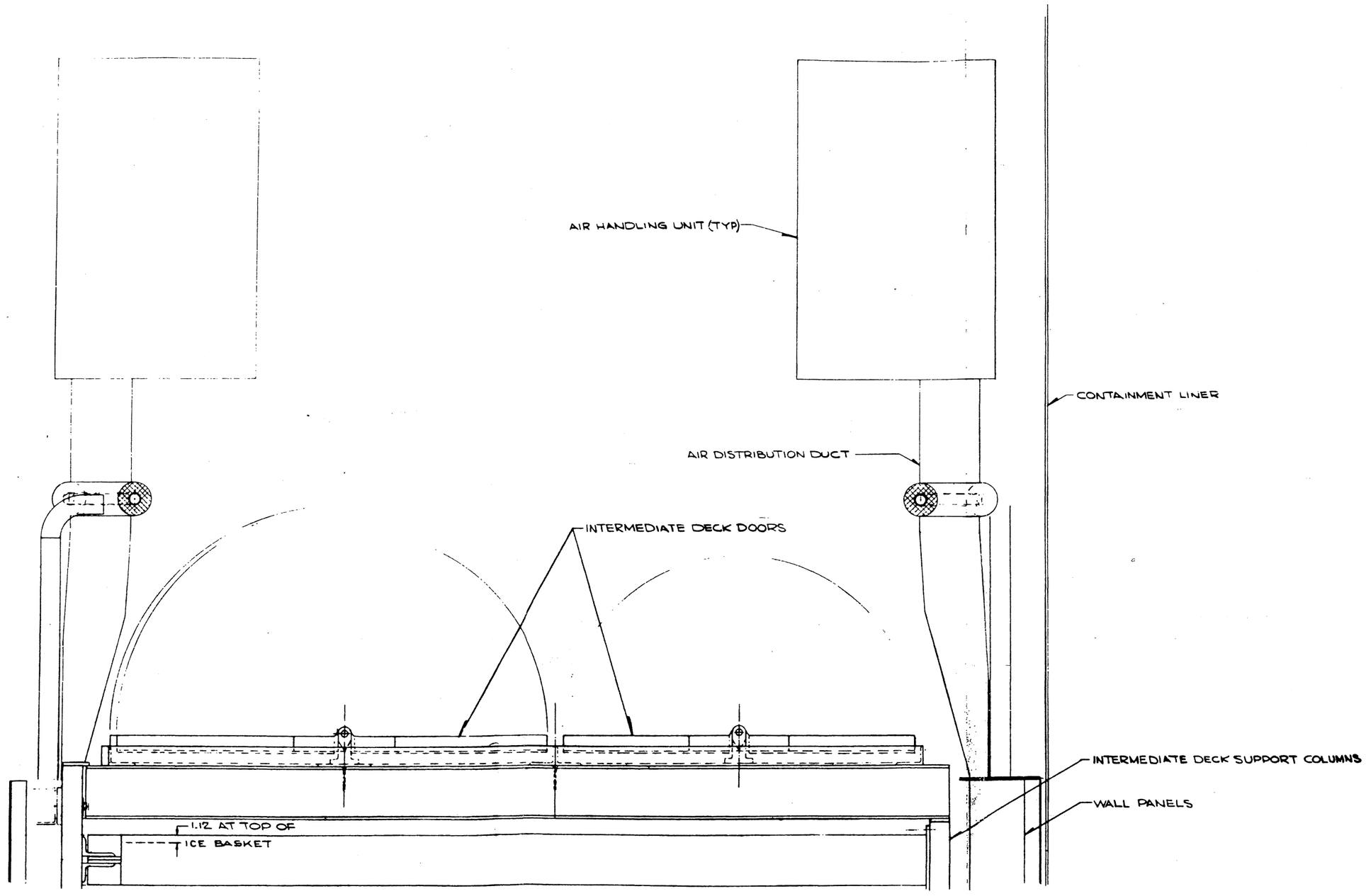

Figure 6.5.12-1 Intermediate Deck Door Assembly

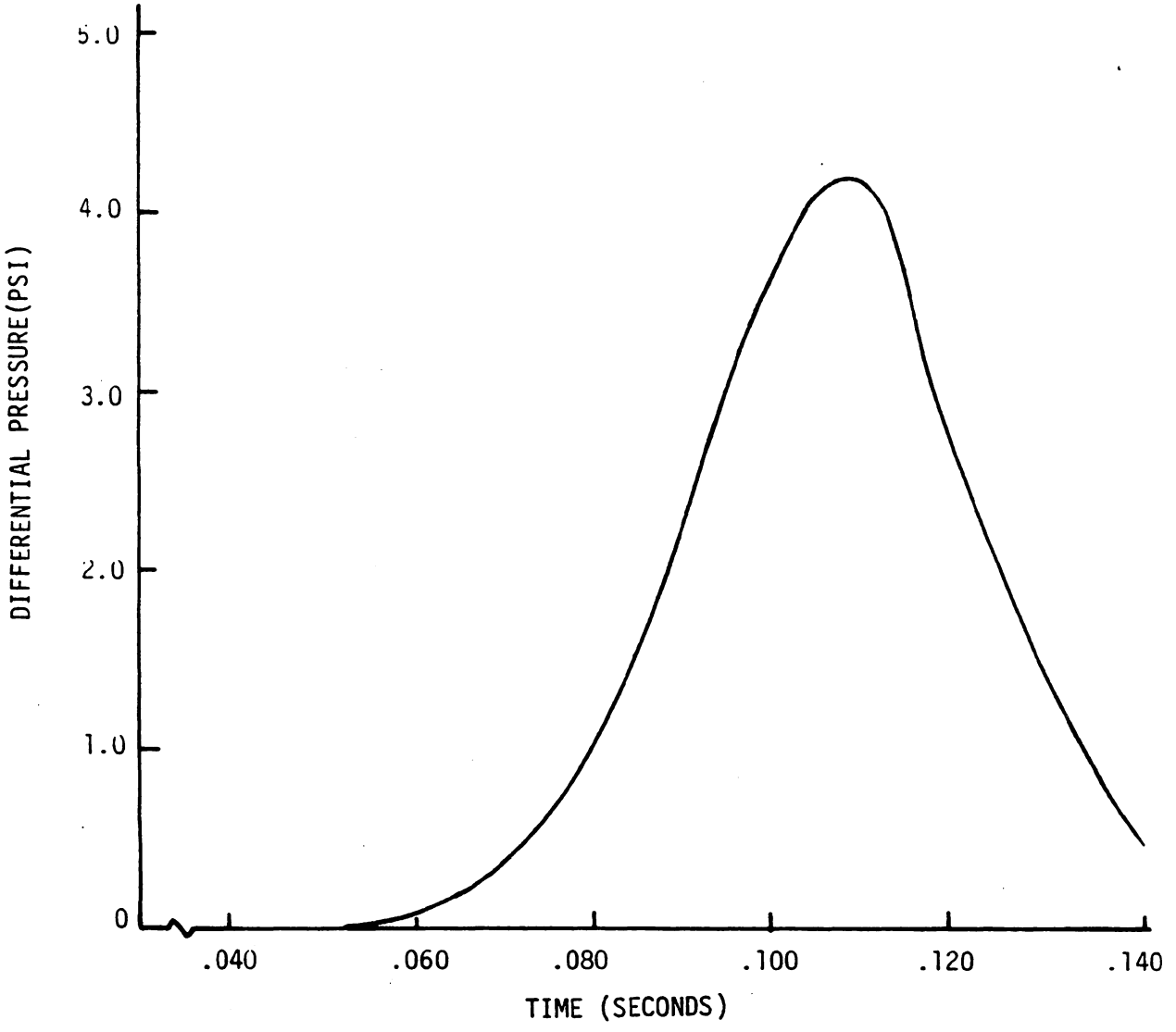

Figure 6.5.12-2 Intermediate Deck Differential Pressure - Time History

NOTE: FOR DESIGN PURPOSES A 40 % MARGIN IS TO BE APPLIED TO THE DIFFERENTIAL PRESSURE GIVEN ON THIS FIGURE. (REF. TABLE 6.5.12-1)

REVISED BY AMENDMENT 6.

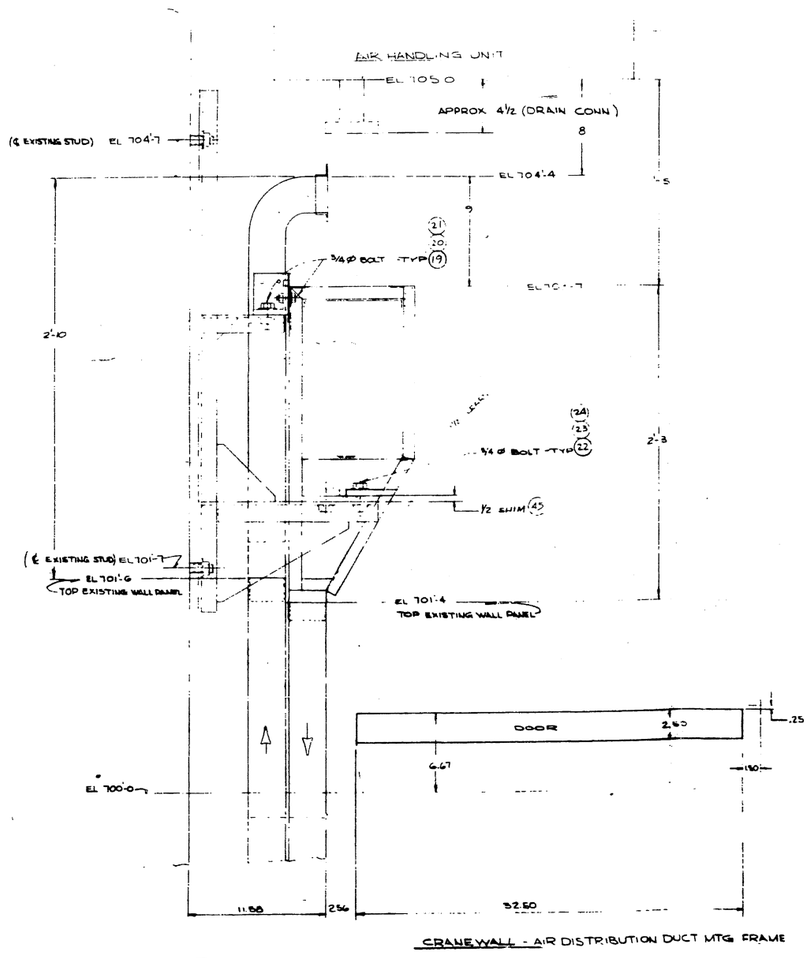

CRANEWALL - AIR DISTRIBUTION DUCT MTG FRAME

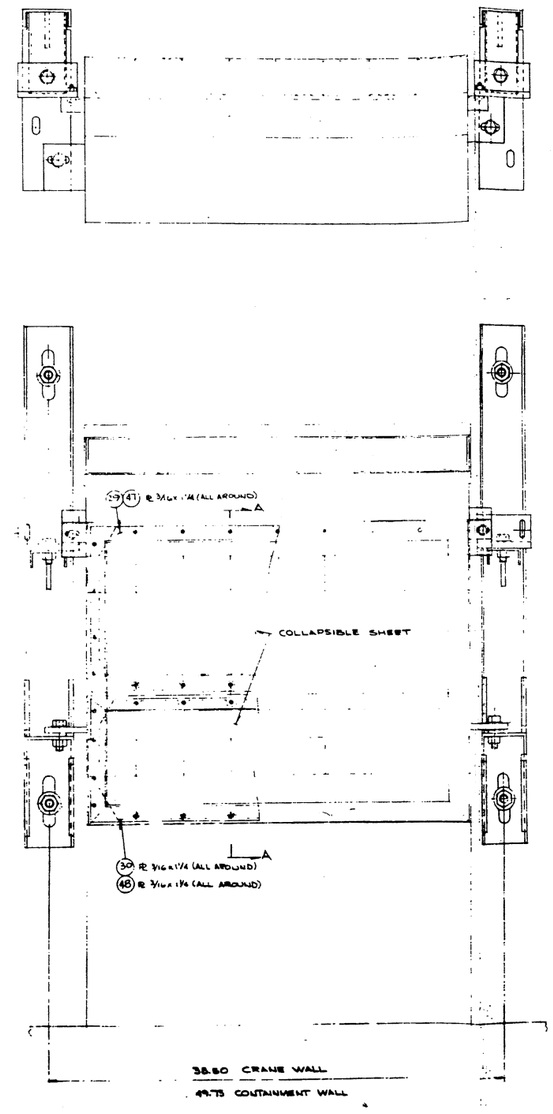

FOR NOTES AND BILL OF MATERIAL SEE W DWG 868446-L108

ALL JOINTS WILL BE AIR TIGHT.

WORK THIS DWG WITH W DWGS 868446-L108 & L109

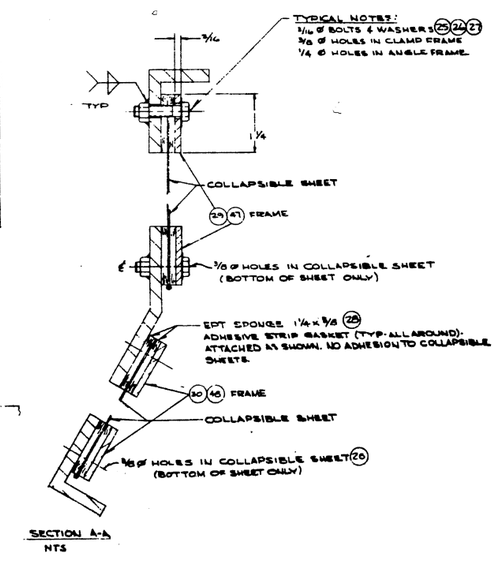

SECTION A-A
NTS

Figure 6.5.13-1 Air Distribution Duct

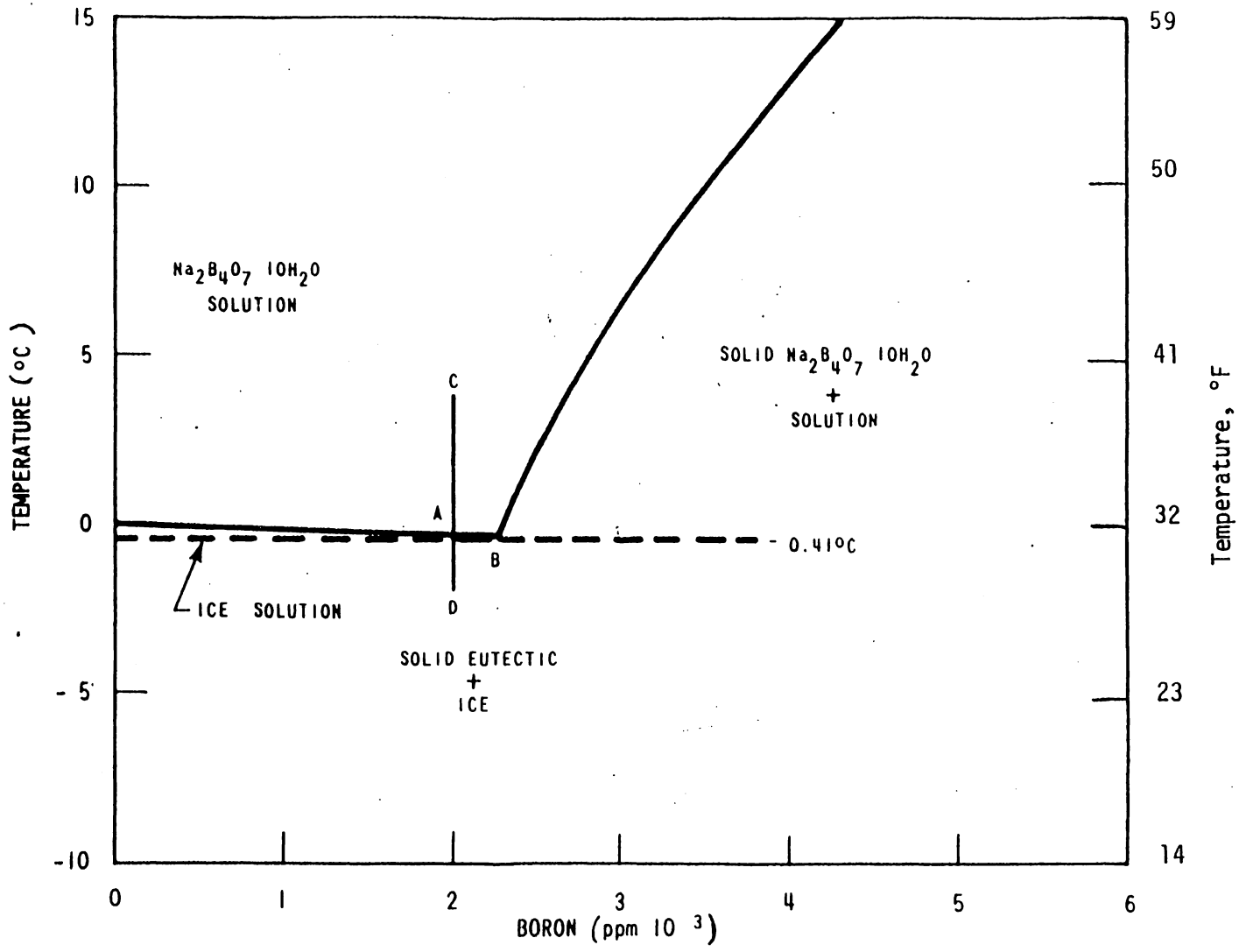

Figure 6.5.15-1 Phase Diagram for $Na_2B_4O_7.10H_2O$ System at One Atmosphere (reference 1)

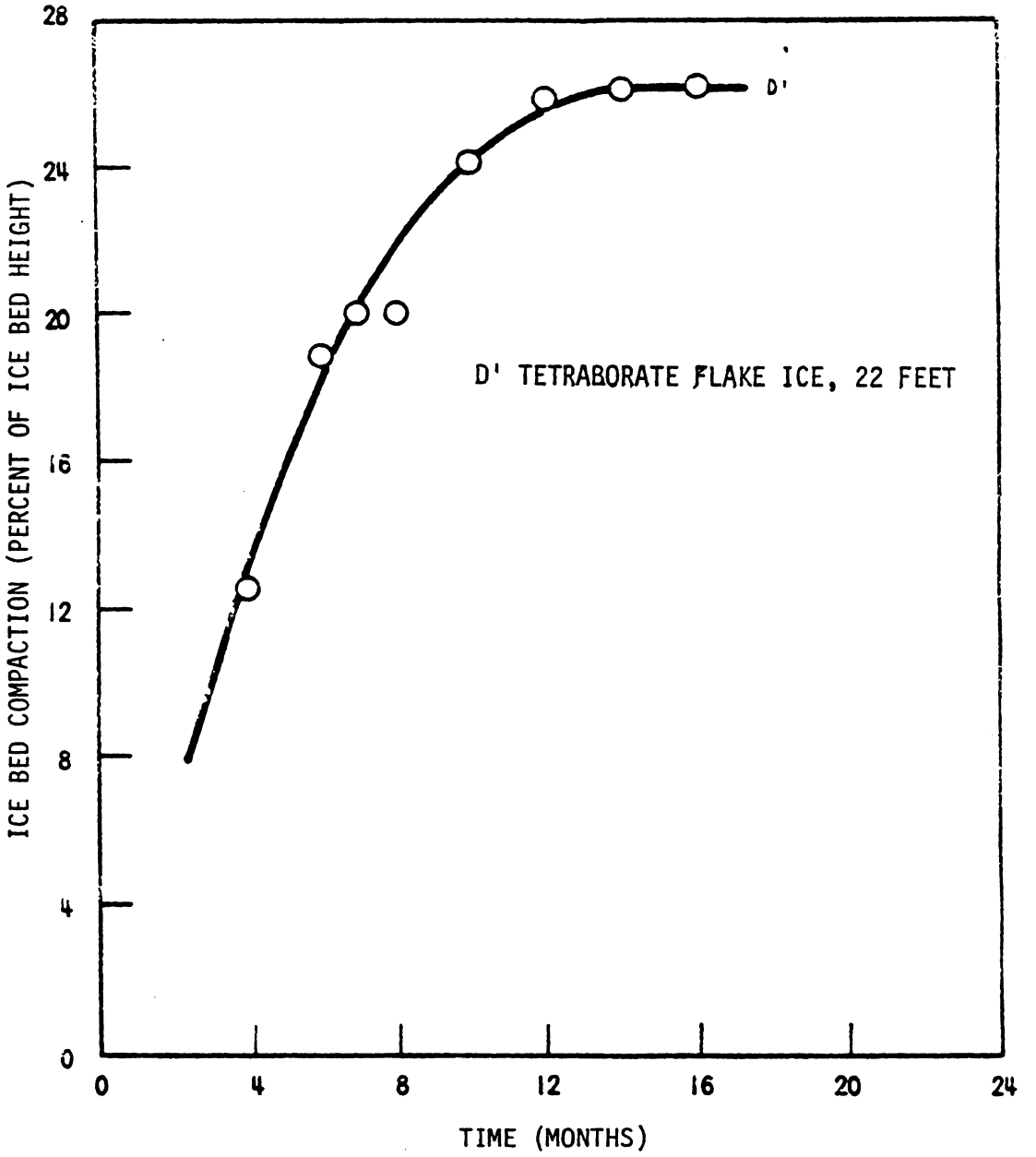

Figure 6.5.15-2 Ice Bed Compaction versus Time

Best Available Historical Image

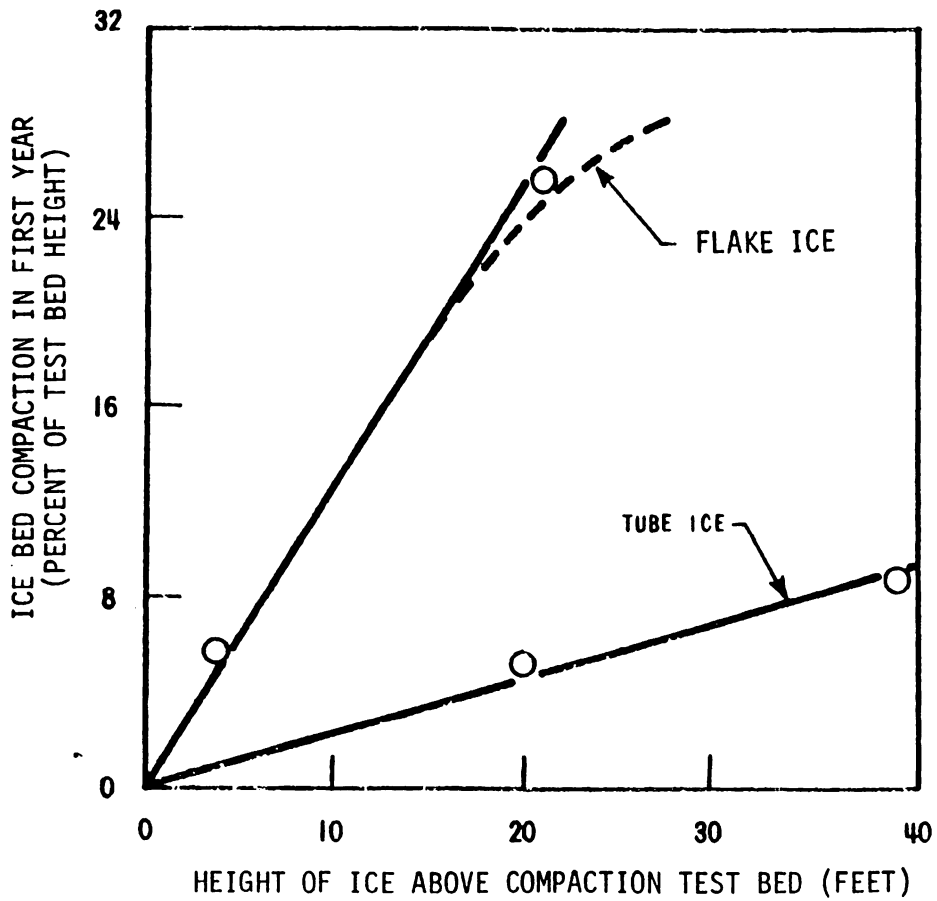

Figure 6.5.15-3 Test Ice Bed Compaction versus Ice Bed Height

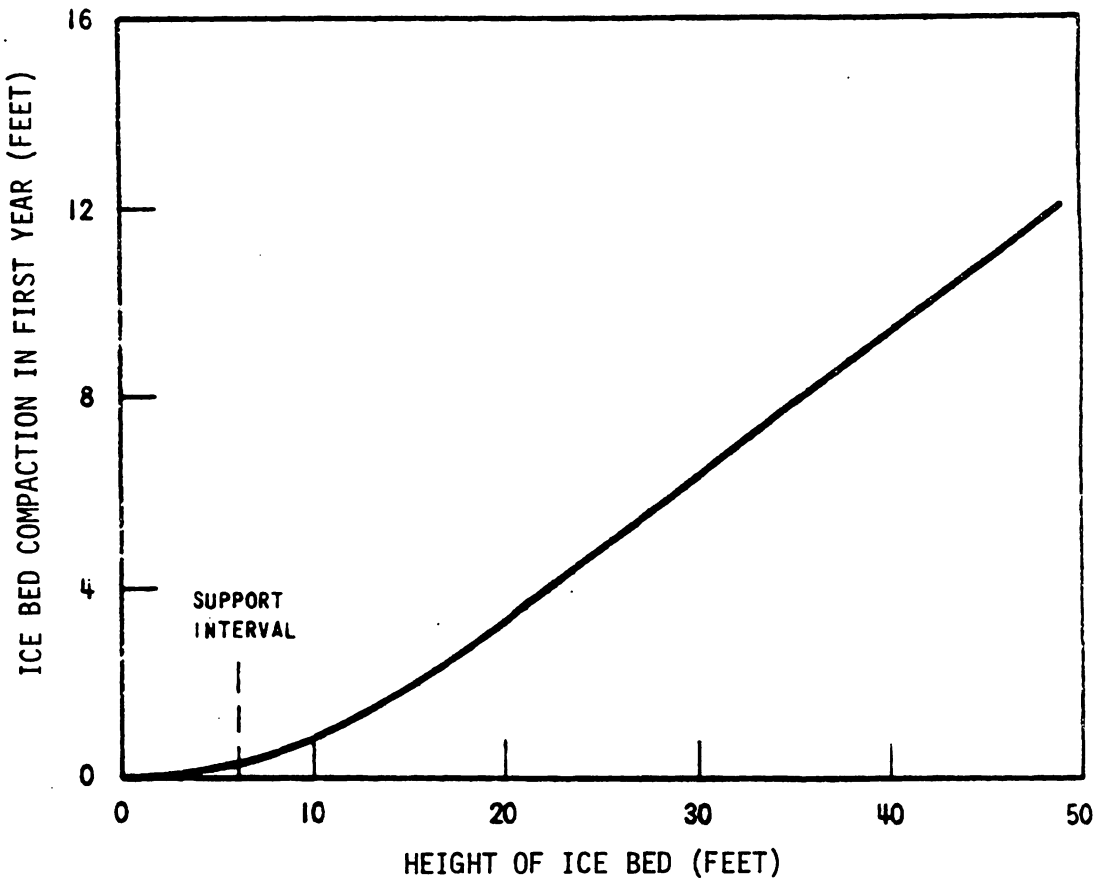

Figure 6.5.15-4 Total Ice Compaction versus Ice Bed Height

6.6 AIR RETURN FANS

6.6.1 Design Bases

The primary purpose of the Air Return Fan System is to enhance the ice condenser and containment spray heat removal operation by circulating air from the upper compartment to the lower compartment, through the ice condenser, and then back to the upper compartment. The operation will take place at the appropriate time (Section 6.5) following the design basis accident including LOCA. The secondary purpose of the system is to limit hydrogen concentration in potentially stagnant regions by ensuring a flow of air from these regions.

6.6.2 System Description

There are two 100 percent capacity air return fans. Each will remove air at the rate of approximately 40,000 cfm from the upper compartment through a main duct to an accumulator room of the lower compartment. (See Figure 9.4.7-1.) The discharged air will flow from each accumulator room through the annular equipment areas into the lower compartment. Any steam produced by residual heat will mix with the air and flow through the lower inlet doors of the ice condenser. The steam portion of the mixture will condense as long as ice remains in the ice condenser and the air will continue to flow into the upper compartment through doors at the top of the ice condenser. Each main duct contains a nonreturn damper which prevents excessive reverse flow.

The fans will start approximately 10 minutes after receipt of a Phase B containment isolation signal. In addition, either fan may be controlled manually from the main control room. Each fan can develop sufficient head to keep the nonreturn dampers and ice condenser inlet doors open after blowdown is complete.

System components are environmentally qualified (EQ) per the requirements of 10CFR50.49 to function during the conditions resulting from a DBA LOCA or MSB. These conditions as well as the normal and abnormal operating conditions are defined in appropriate EQ design criteria. During accident conditions, the system is capable of operating continuously with temperatures ranging up to 327°F for the first hour, and at 250°F and 100 percent relative humidity for 100 days, with a total radiation dose of up to 10^8 rads. See Section 15.5.8, Reference 17. The fan motors contain motor space heaters which operate normally to prevent condensation within the motor even when the ambient relative humidity is at 100 percent. Materials of the system are essentially steel, coated to prevent corrosion.

The Air Return Fan System is an engineered safety feature and meets the qualification requirements for seismic Category I. The main duct through the divider deck between the upper and lower compartments meets the requirements of ANSI Safety Class 2A. The remainder of the system meets the requirements of ANSI Safety Class 2B.

The design of the fans and controls of each 100 percent capacity system meets the intent of Regulatory Guides 1.29 and 1.53.

Each air return fan is direct drive, vaneaxial, with a capacity of not less than 40,000 cfm against a static pressure of 5 inches water gauge; each is driven by a 460-volt, 3-phase electric motor which develops 50 horsepower at 1,170 r/min. The non-return dampers are heavy duty and are designed to prevent flow from the lower compartment to the upper compartment under a

differential pressure of 12 lb/in^2. The dampers are controlled to open when the differential pressure across the operating fan assures flow from the upper to lower compartment. The gravity-loaded damper will fail in the closed position upon loss of necessary flow head, and has a leakage area at 12 lb/in^2 differential pressure of not more than 4 square inches. The position of the damper is monitored in the control room.

Simultaneously with the return of air from the upper compartment to the lower compartment, post-LOCA hydrogen mixing capability is provided by the Air Return Fan System in the following regions of the containment: containment dome, each of the four steam generator enclosures, pressurizer enclosure, upper reactor cavity, each of the four accumulator rooms, and the instrument room. These regions are served by hydrogen collection headers which terminate on the suction side of either of the two air return fans as shown in Figure 9.4.7-1. The minimum design flow from each region is sufficient to limit the local concentration of hydrogen to not more than 3 percent when the containment average is 2 percent.

The header system was adjusted prior to initial plant operation to assure that the actual flows are at least equal to the minimum design flow when either or both fans are in operation.

6.6.3 Safety Evaluation

In order to assure the rapid return of air to the lower compartment after the initial blowdown, air return fans are provided. The design basis of the fans is described in Section 6.2.1.3. The fans also provide a continuous mixing of containment compartment atmosphere for the long-term postblowdown environment. This mixing flow is to bring fission products in contact with the ice bed and/or the upper compartment spray for removal from the containment atmosphere, as described in Section 6.2.3. The fans also aid in mixing the containment atmosphere to preclude hydrogen pocketing, which is assumed to be produced as a result of the accident. A fully redundant system is provided by the design.

Each fan located in the lower compartment, when operating alone, will circulate air at approximately 40,000 cfm from the upper compartment into the lower compartment. A back-draft damper, usually closed, is located upstream of each deck fan to prevent reverse flow during the initial loss-of-coolant blowdown. In addition, each fan will mix air from the enclosed areas in the lower volume to the general lower volume atmosphere to prevent excessive localized hydrogen buildup following a DBA.

The air return fans have sufficient head to overcome the compartment differentials that occur after the Reactor Coolant System blowdown. The fan head is sufficient to overcome steam generation by decay heat, plus air flow into the ice condenser inlet doors, ice condenser cold head differential, flow through the ice condenser and other system losses. In the event that the top and intermediate deck doors should all reclose after blowdown, each fan has sufficient head to overcome the increased pressure to pass the required flow. After complete ice bed melt out, each fan has sufficient head to flow a minimum of 40,000 cfm with the containment pressurized to the design pressure rating.

Two 100 percent capacity air return systems are provided. Thus, if one fan should fail, the other will provide the necessary air flow from the upper to lower compartment. The fans are designed to withstand the post-accident containment environment. To preclude the flooding of containment air return fan A-A, curbs or "kick plates" are installed about the fan. These curbs

will cause spray water runoff to flow into the sump through the refueling canal, rather than the equipment hatch, personnel access hatch, or fan A-A. In addition, system redundancy assures that the minimum design flows required for hydrogen mixing capability are achieved even during operation of only one air return fan. As seen in Figure 9.4.7-1, the headers which serve the steam generator enclosures, pressurizer enclosure, accumulator rooms, and instrument room are interconnected on the suction side of each fan (downstream of the nonreturn damper). This arrangement permits flow in either direction depending on the fan in operation. The upper reactor cavity and containment dome areas have separate headers connected to each fan which accomplishes the same objective when only one fan is in operation.

6.6.4 Inspection and Testing

Preoperational performance tests are addressed in Chapter 14. Inservice tests and inspections are provided in Technical Specifications.

6.7 AUXILIARY FEEDWATER SYSTEM

The auxiliary Feedwater System is discussed in Paragraph 10.4.7.2.

6.8 PUMP AND VALVE INSERVICE TESTING PROGRAM

The ASME SECTION XI Pump and Valve Inservice Testing Programs were completed for the first ten year inspection interval on December 12, 1995. Unit 1 pump and valve testing was performed to the requirements of ASME Section XI 1974 Edition through the Summer 1975 Addenda. Unit 2 pump and valve testing was performed to the requirements of ASME Section XI 1977 Edition through the Summer 1978 Addenda. The first ten year interval was greater in length due to the lengthy shutdown periods of the units during this interval.

The second ten year interval was based upon the 1989 Edition of the ASME Section XI Code and utilizes OM Part 6 for pumps and OM Part 10 for valves and OM Part 1 for relief valves. Information relative to the scope, exemptions, relief requests, and program basis information is contained in the Sequoyah ASME Inservice Pump Testing Program Basis Document and the ASME Inservice Valve Testing Program Basis Document.

The third ten-year interval is based upon the ASME OM Code 2001 Edition through the 2003 Addenda. The OM Code provides the rules for the selection and testing of pumps, valves, and relief devices. Information relative to the scope, exemptions, relief requests, and program basis information is contained within SQN site technical procedures.

6.9 MOTOR-OPERATED VALVE PROGRAM - GENERIC LETTER 89-10

6.9.1 Program Description

NRC Generic Letter (GL) 89-10, "Safety-Related Motor Operated Valve Testing and Surveillance," requests that holders of nuclear power plant operating licenses and construction permits establish a program to provide for testing, inspection, and maintenance of safety-related motor-operated valves (MOVs) and certain other MOVs in safety-related systems so as to provide the necessary assurance that they will function when subjected to the design basis conditions that are to be considered during both normal operation and abnormal events within the design basis of the plant.

GL 89-10, GL 95-07; Pressure Locking and Thermal Binding of Safety-Related Power-Operated Gate Valves, and GL 96-05; Periodic Verification of Design-Basis Capability of Safety-Related MOVs, are described in the Motor-Operated Valve Program.

6.9.2 References

1. TVA letter to NRC dated December 21, 1989, Browns Ferry Nuclear Plant (BFN), Sequoyah Nuclear Plant (SQN), and Watts Bar Nuclear Plant (WBN) - Response to Generic Letter (GL) 89-10 - Safety-Related Motor-Operated Valve (MOV) Testing and Surveillance.

2. TVA letter to NRC dated October 28, 1991, Sequoyah Nuclear Plant - Supplemental Information for Compliance with Generic Letter (GL) 89-10.

3. TVA letter to NRC dated November 26, 1991, Sequoyah Nuclear Plant (SQN) - TVA Response to NRC Inspection Report 91-18 Regarding Generic Letter (GL) 89-10.

4. TVA letter to NRC dated October 16, 1995, Browns Ferry Nuclear Plant (BFN), Sequoyah Nuclear Plant (SQN), and Watts Bar Nuclear Plant (WBN) - Initial response to (GL) 95-07, Pressure Locking and Thermal Binding of Safety-Related Power-Operated Gate Valves.

5. TVA letter to NRC dated December 15, 1995, Browns Ferry Nuclear Plant (BFN), Sequoyah Nuclear Plant (SQN), and Watts Bar Nuclear Plant (WBN) - Revised response to (GL) 95-07, Pressure Locking and Thermal Binding of Safety-Related Power-Operated Gate Valves.

6. TVA letter to NRC dated March 15, 1996, Browns Ferry Nuclear Plant (BFN), Sequoyah Nuclear Plant (SQN), and Watts Bar Nuclear Plant (WBN) - Supplement response to (GL) 95-07, Pressure Locking and Thermal Binding of Safety-Related Power-Operated Gate Valves.

7. TVA letter to NRC dated February 13, 1996, Browns Ferry Nuclear Plant (BFN), Sequoyah Nuclear Plant (SQN), and Watts Bar Nuclear Plant (WBN) - 180-day response to (GL) 95-07, Pressure Locking and Thermal Binding of Safety-Related Power-Operated Gate Valves.

8. TVA letter to NRC dated August 6, 1996, Sequoyah Nuclear Plant units 1 and 2 - Response to NRC requests for additional information - (GL) 95-07, Pressure Locking and Thermal Binding of Safety-Related Power-Operated Gate Valves.

9. TVA letter to NRC dated November 18, 1996, Browns Ferry Nuclear Plant (BFN), Sequoyah Nuclear Plant (SQN), Watts Bar Nuclear Plant (WBN), and Bellefonte Nuclear Plant (BLN) - Response to (GL) 96-05, Periodic Verification of Design-Basis Capability of Safety-Related Motor-Operated Valves dated September 18, 1996.

10. TVA letter to NRC dated March 17, 1997, Browns Ferry Nuclear Plant (BFN), Sequoyah Nuclear Plant (SQN), Watts Bar Nuclear Plant (WBN), and Bellefonte Nuclear Plant (BLN) - 180-day response to NRC (GL) 96-05, Periodic Verification of Design-Basis Capability of Safety-Related Motor-Operated Valves dated September 18, 1996.

11. NRC letter to TVA dated August 27, 1998, Completion of Action for Generic Letter 95-07 and Transmittal of Safety Evaluation of Licensee Response, Sequoyah Nuclear Plan, Units 1 and 2 (TAC Nos. M93519 and M93520).

12. TVA letter to NRC dated April 28, 1998, Brown's Ferry Nuclear Plant (BFN), Sequoyah Nuclear Plant (SQN), Watts Bar Nuclear Plant (WBN), and Bellefonte Nuclear Plant (BLN) Response to NRC's Safety Evaluation dated October 30, 1997 on Joint Owner's Group (JOG) Program for Generic Letter (GL) 96-05, "Periodic Verification (PV) of Motor Operated Valves (MOV)" described in Topical Report MPR-1807 (Revision 2).

13. TVA letter to NRC dated April 23, 1999, Sequoyah Nuclear Plant (SQN) Units 1 and 2 - Docket Nos. 50-327 and 50-328 - Facility Operating License DPR-77 and DPR-79 - Response to NRC Questions Concerning Generic Letter (GL) 96-05.

14. NRC's letter to TVA dated January 3, 2000, Sequoyah Nuclear Plant, Units 1 and 2 - Closeout of Generic Letter (GL) 96-05, "Periodic Verification of Design Basis Capability of Safety-Related Motor Operated Valves."

APPENDIX 6A

IODINE REMOVAL IN THE

ICE CONDENSER SYSTEM

TABLE OF CONTENTS

APPENDIX 6A

IODINE REMOVAL IN THE

ICE CONDENSER SYSTEM

Section	Title	Page
6A.1	INTRODUCTION	6A-3
6A.2	ANALYTICAL MODEL	6A-3
6A.3	APPLICATION OF ICE CONDENSER IODINE REMOVAL MODEL	6A-4

TABLE OF FIGURES

Number	Title
6A-1	Ice Condenser System

APPENDIX 6A

IODINE REMOVAL IN THE ICE CONDENSER SYSTEM

6A.1 INTRODUCTION

Following a postulated loss of coolant accident, fission products are assumed to be released from the reactor fuel elements in accordance with the model outlined in TID-14844. This model is used as a basis for determining if the iodine removal systems installed in the nuclear power plant are adequate to insure that the off-site doses do not exceed 10 CFR 100 reference values.

As a result of experimental and analytical efforts by Westinghouse, the ice condenser system has been proven to be an effective passive system for removing elemental iodine from the containment atmosphere and thereby reducing the off-site doses following a Loss of Coolant Accident. The experimental program and results of the ice condenser system effectiveness in removal of elemental iodine is reported in WCAP 7426, a non-proprietary topical report. The results of these extensive bench scale tests clearly indicated that an ice condenser system containing sodium tetraborate ice could effectively remove elemental iodine from the containment atmosphere.

In order to apply the results of the bench scale experimental program, an analytical model applicable to the plant ice condenser system has been developed from the data of the experimental program. The purpose of this appendix is to describe the analytical model and present the results of the ice condenser iodine removal effectiveness analysis.

6A.2 ANALYTICAL MODEL

Following a LOCA a large volume of steam would discharge into the containment lower compartment. Pressure and temperature would rise immediately. At first the increased pressure in the lower compartment would force steam through the ice condenser sections and later recirculation fans would circulate the iodine-air-steam mixture through the ice condenser.

The ice condenser serves primarily as a large heat sink to readily reduce the containment temperature and pressure and condense the steam. In addition to steam, iodine as gaseous elemental iodine may be liberated into the containment. It is also assumed that a fraction of the iodine in the containment atmosphere exists as methyl iodine. Elemental iodine, being readily soluble in aqueous solutions will be removed from the air-steam mixture by the ice condenser. Methyl iodide, however, is assumed not to be removed by the ice condenser.

The ice in the ice condenser will contain sodium tetraborate normally referred to as alkaline ice by virtue of the alkalinity of the ice melt.

Data obtained from the experimental program as reported in WCAP 7426 can be classified as (1) alkaline ice and (2) acid ice. Since alkaline ice will be used in the ice condenser the iodine removal efficiency from those tests results were correlated. The theoretical analysis for iodine removal by alkaline ice treats the ice condenser as consisting of two distinct compartments, an ice section and a rain section. Melt, falling from the ice into the sump comprises the rain section (see Figure 6A-1). Steam condenses from the air-steam of melt mixture in both sections. In the ice section $(1+\lambda_v/\lambda_f)$ grams of melt mixture are formed per gram of steam condensed, where λ_v is latent heat of vaporization of water and λ_f is latent heat of fusion of water. In the rain section, however, only 1 gram of melt mixture is formed per gram of steam

condensed. Melt temperature rises above 32°F as steam condenses in the rain. As time progresses more ice melts, and the rain section plays a more significant role in iodine removal.

An equation for iodine removal efficiency is obtained by solving the multi-component diffusion equations for steam-air-iodine mixtures in both ice condenser sections. In the rain section iodine is treated as a trace component with air and steam as the bulk constituents. Iodine from the bulk vapor diffuses through a gaseous boundary layer into the spherical drop as it falls through the rain section. Condensation of water vapor and absorption of iodine in the ice sections were treated in a similar manner. Ice is modeled as a flat plate surrounded by an essentially stagnant air-steam-iodine boundary layer through which steam and iodine diffuse.

The solution of the diffusion equations based on the above assumptions results in the following relationship:

$$\eta_I = Y_s \ \eta_s$$

Where:

η_I is the iodine removal efficiency, $\frac{\text{gm iodine removed}}{\text{gm iodine fed to condenser}}$,

Y_s is the mole fraction steam in inlet gas stream, and

η_s is the steam condensation efficiency, $\frac{\text{gm steam condensed}}{\text{gm steam fed to condenser}}$

Since the steam condensation efficiency in an ice condenser is nearly 100% the iodine removal efficiency is directly related to the mole fraction of steam in the inlet gas steam.

6A.3 APPLICATION OF ICE CONDENSER IODINE REMOVAL MODEL

The ice condenser iodine removal model has been applied to an ice condenser containment. The model assumes iodine is released from the reactor system after blowdown and mixed with steam from boiloff and is swept to the ice condenser by the recirculation fans. The vapor composition of the lower compartment is homogenous mixture of iodine, steam from core boiloff, and air.

The ice bed iodine removal efficiency, η_I, has been computed on a time dependent basis for Sequoyah with the results provided in Table 15.5.3-2.

The results of the ice condenser iodine removal efficiency are applied in Chapter 15 in evaluating the off-site doses.

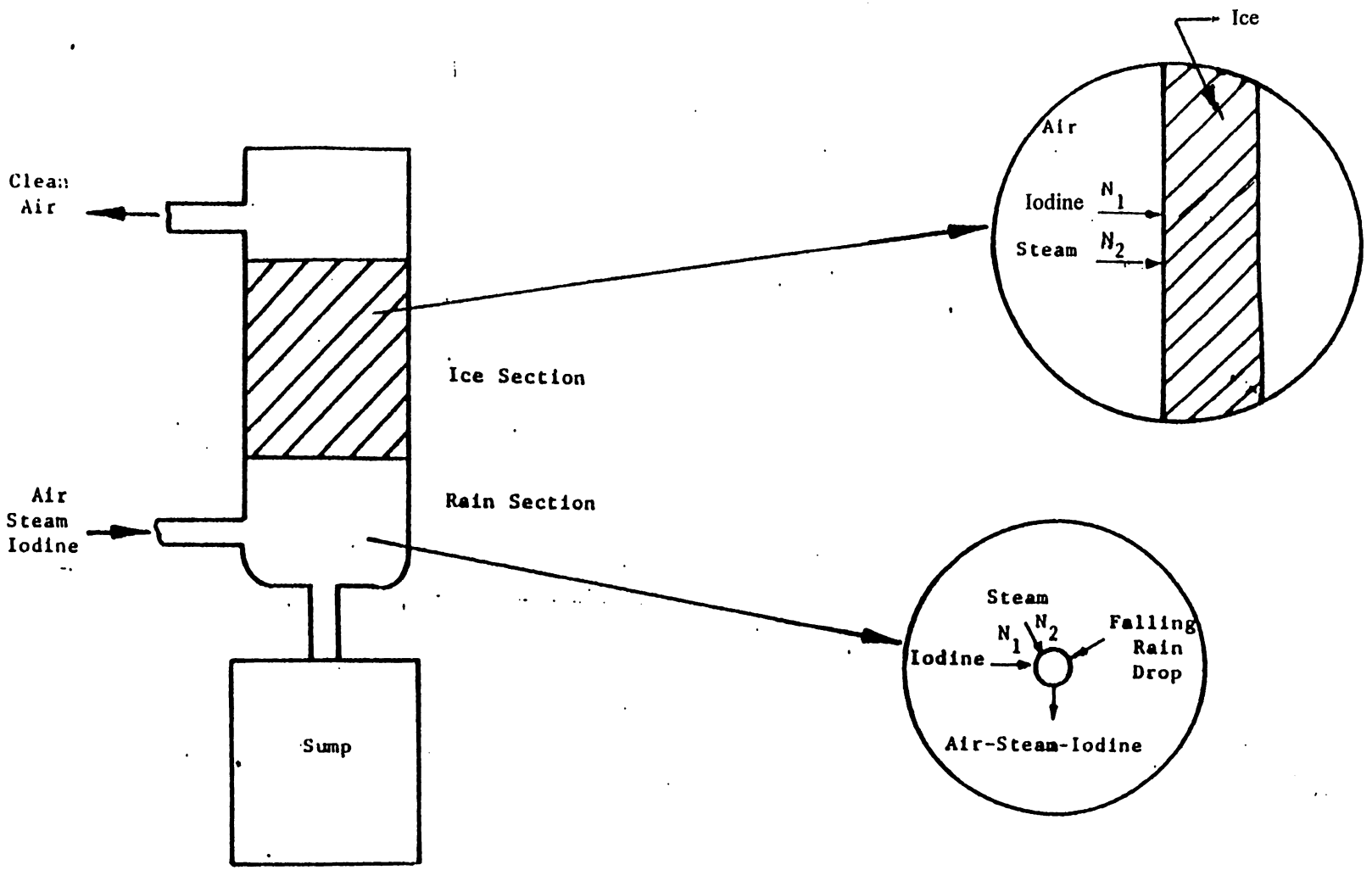

FIGURE 6A-1 ICE CONDENSER

LIST OF CONTENTS

Section	Title	Page
7.0	INSTRUMENTATION AND CONTROLS	
7.1	INTRODUCTION	7.1-1
7.1.1	IDENTIFICATION OF SAFETY RELATED SYSTEMS	7.1-4
7.1.1.1	Safety Related Systems	7.1-4
7.1.1.2	Safety Related Display Instrumentation	7.1-4
7.1.1.3	Instrumentation and Control System Designers	7.1-5
7.1.1.4	Plant Comparison	7.1-5
7.1.2	IDENTIFICATION OF SAFETY CRITERIA	7.1-5
7.1.2.1	Design Bases	7.1-7
7.1.2.2	Independence of Redundant Safety Related Systems	7.1-10
7.1.2.3	Physical Identification of Safety Related Equipment	7.1-12
7.1.2.4	Conformance to IEEE 317-1971 (Reference 3), IEEE 317-1976 (Reference 21), and IEEE 317-1983 (Reference 25)	7.1-12
7.1.2.5	Conformance to IEEE 323-1971 (Reference 4) and IEEE 323-1974 (Reference 16)	7.1-12
7.1.2.6	Conformance to IEEE 336-1971 (Reference 5)	7.1-13
7.1.2.7	Conformance to IEEE 338-1971 (Reference 6)	7.1-13
7.1.2.8	Conformance to Regulatory Guide 1.22 (February, 1972) (Reference 7)	7.1-13
7.1.2.9	Conformance to IEEE 308-1971 (Reference 9)	7.1-14
7.1.2.10	Conformance to IEEE 334-1971 (Reference 8)	7.1-14
7.1.2.11	Conformance to IEEE 344-1971 (Reference 10) and IEEE 344-1975 (Reference 20)	7.1-14
7.1.2.12	Conformance to IEEE 379-1972 and Regulatory Guide 1.53 (June, 1973) (References 1, 12, and 13)	7.1-14
7.1.3	ELECTRICAL PENETRATIONS	7.1-15
7.1.3.1	Design Bases	7.1-15
7.1.3.2	System Description	7.1-15
7.1.3.3	Tests and Inspections	7.1-15
7.1.4	CONTROL ROOM DISPLAYS AND CONTROLS	7.1-16
7.1.4.1	Control Room Panels	7.1-16
7.1.4.2	Safety Parameter Display System	7.1-16
7.1.4.3	Bypassed and Inoperable Status Indication	7.1-18
7.1.4.4	Distributed Control System Displays	7.1-19
7.1.5	REFERENCES	7.1-21
7.2	REACTOR TRIP SYSTEM	7.2-1
7.2.1	DESCRIPTION	7.2-1
7.2.1.1	System Description	7.2-1
7.2.1.2	Design Bases Information	7.2-13
7.2.2	ANALYSES	7.2-16
7.2.2.1	Failure Mode and Effects Analyses	7.2-16

LIST OF CONTENTS

Section	Title	Page
7.2.2.2	Evaluation of Design Limits	7.2-16
7.2.2.3	Specific Control and Protection Interactions	7.2-24
7.2.2.4	Additional Postulated Accidents	7.2-27
7.2.3	TESTS AND INSPECTIONS	7.2-28
7.2.3.1	Inservice Tests and Inspections	7.2-28
7.2.3.2	Periodic Testing of the Nuclear Instrumentation System	7.2-30
7.2.3.3	Periodic Testing of the Process Channels of the Protection Circuits	7.2-30
7.2.4	REFERENCES	7.2-32
7.3	ENGINEERED SAFETY FEATURES ACTUATION SYSTEM	7.3-1
7.3.1	DESCRIPTION	7.3-1
7.3.1.1	System Description	7.3-1
7.3.1.2	Design Bases Information	7.3-5
7.3.2	ANALYSIS	7.3-7
7.3.2.1	Failure Mode and Effects Analyses	7.3-7
7.3.2.2	Compliance with Standards and Design Criteria	7.3-7
7.3.2.3	Further Considerations	7.3-12
7.3.2.4	Summary	7.3-12
7.3.3	REFERENCES	7.3-16
7.4	SYSTEMS REQUIRED FOR SAFE SHUTDOWN	7.4-1
7.4.1	DESCRIPTION	7.4-1
7.4.1.1	Control Room Availability	7.4-1
7.4.1.2	Auxiliary Controls	7.4-1
7.4.1.3	Systems Available for Hot Shutdown	7.4-2
7.4.1.4	Systems Available for Cold Shutdown	7.4-4
7.4.1.5	Additional Systems Available Outside the Main Control Room	7.4-4
7.4.2	ANALYSIS	7.4-5
7.5	SAFETY-RELATED DISPLAY INSTRUMENTATION FOR POSTACCIDENT MONITORING (PAM)	7.5-1
7.5.1	DESCRIPTION	7.5-1
7.5.1.1	System Description	7.5-1
7.5.1.2	Variables Types	7.5-1
7.5.1.3	Variables Categories	7.5-2
7.5.2	DESIGN BASIS	7.5-2
7.5.2.1	Selection Criteria	7.5-2
7.5.2.2	Design Criteria	7.5-3
7.5.2.3	General Requirements	7.5-5
7.5.3	ANALYSIS	7.5-6

LIST OF CONTENTS

Section	Title	Page
7.5.4	TESTS AND INSPECTIONS	7.5-7
7.5.4.1	Programs	7.5-7
7.5.4.2	Removal of Channels from Service	7.5-7
7.5.4.3	Administrative Control	7.5-7
7.5.5	REFERENCES	7.5-7
7.6	ALL OTHER SYSTEMS REQUIRED FOR SAFETY	7.6-1
7.6.1	INSTRUMENTATION AND CONTROL VITAL POWER SUPPLY SYSTEMS	7.6-1
7.6.1.1	Description	7.6-1
7.6.1.2	Functional Performance Requirements	7.6-1
7.6.1.3	Analysis	7.6-1
7.6.2	RESIDUAL HEAT REMOVAL ISOLATION VALVES	7.6-2
7.6.2.1	Description	7.6-2
7.6.2.2	Analysis	7.6-2
7.6.3	REFUELING INTERLOCKS	7.6-3
7.6.4	DELETED BY AMENDMENT 8	7.6-5
7.6.5	LOOSE PART DETECTION SYSTEM (LPDS)	7.6-5
7.6.6	SPURIOUS ACTUATION PROTECTION FOR MOTOR OPERATED VALVES	7.6-5
7.6.7	INTERLOCKS FOR RCS PRESSURE CONTROL DURING LOW TEMPERATURE OPERATION	7.6-6
7.6.7.1	Analysis of Interlocks	7.6-7
7.6.8	LIQUID LEVEL MONITORING SYSTEM	7.6-8
7.6.8.1	Steam Generator Water Level Instrumentation	7.6-8
7.6.8.2	Pressurizer Water Level Instrumentation	7.6-8
7.6.9	SWITCHOVER FROM S.I. TO RECIRCULATION FOLLOWING LOCA	7.6-8
7.6.10	IN-CORE INSTRUMENTATION – THERMOCOUPLES	7.6-9
7.6.11	REFERENCES	7.6-9
7.7	CONTROL SYSTEMS NOT REQUIRED FOR SAFETY	7.7-1
7.7.1	DESCRIPTION	7.7-1
7.7.1.1	Reactor Control System	7.7-3
7.7.1.2	Rod Control System	7.7-3
7.7.1.3	Plant Control Signals for Monitoring and Indicating	7.7-4
7.7.1.4	Plant Control System Interlocks	7.7-8
7.7.1.5	Pressurizer Pressure Control	7.7-9
7.7.1.6	Pressurizer Water Level Control	7.7-9
7.7.1.7	Steam Generator Water Level Control	7.7-10
7.7.1.8	Steam Dump Control (SDC) Systems	7.7-11
7.7.1.9	In-Core Instrumentation	7.7-12
7.7.1.10	Control Board	7.7-14
7.7.1.11	Comparison of Plant Control (PC) Systems with the Donald C. Cook Station	7.7-15
7.7.1.12	Anticipated Transient Without Scram (ATWS) Mitigating System Actuation Circuitry (AMSAC)	7.7-15

LIST OF CONTENTS

Section	Title	Page
7.7.2	ANALYSIS	7.7-16
7.7.2.1	Separation of Protection and Control Systems	7.7-17
7.7.2.2	Response Considerations of Reactivity	7.7-17
7.7.2.3	Step Load Changes Without Steam Dump	7.7-19
7.7.2.4	Loading and Unloading	7.7-20
7.7.2.5	Load Rejection Furnished by Steam Dump System	7.7-20
7.7.2.6	Turbine-Generator Trip with Reactor Trip	7.7-20
7.7.3	REFERENCES	7.7-21
APPENDIX 7A	INSTRUMENTATION IDENTIFICATIONS AND SYMBOLS	7A-1

LIST OF TABLES

Number	Title
7.2.1-1	List of Reactor Trips
7.2.1-2	Protection System Interlocks
7.2.1-3	Trip Correlation
7.2.1-4	Reactor Trip System Instrument Accuracies
7.2.1-5	Reactor Trip System Instrumentation Response Times
7.3.1-1	Instrumentation Operating Condition for Engineered Safety Features
7.3.1-2	Instrument Operating Conditions for Isolation Functions
7.3.1-3	Interlocks for Engineered Safety Features Actuation System
7.3.1-4	Engineered Safety Features Response Times
7.3.2-1	Required Safety Feature
7.5-1	Summary of Qualification Criteria for Post Accident Monitoring
7.5-2	Table of Variables for Post Accident Monitoring
7.7.1-1	Plant Control System Interlocks

LIST OF FIGURES

Number	Title
7.1.3-1	Electrical Penetration High-Voltage Power Penetration Assembly
7.1.3-2	Electrical Penetration Nuclear Instrumentation System Penetration Assembly
7.1.3-3	Electrical Penetration Control Rod Position Indication Assembly
7.1.3-4	Electrical Penetration Low-Voltage Power, Control, and Indication Assembly
7.1.3-5	Electrical Penetration Thermocouple Penetration Assembly
7.1.4-1	Layout of Control Boards
7.2.1-1	Instrumentation and Control Systems Logic Diagrams (20 sheets)
7.2.1-2	Setpoint Reduction Function for Overpower and Overtemperature ΔT Trips
7.2.2-1	Typical Illustration of Overtemperature and Overpower ΔT Protection
7.2.2-2	Design to Achieve Isolation Between Channel
7.6.6-1	Spurious Actuation Protection for MOVs
7.6.7-1	Low Temperature Overpressure Protection
7.6.9-1	Safety Injection System Recirculation Sump Isolation Valves
7.7.1-1	Simplified Block Diagram of Reactor Control System
7.7.1-2	Control Bank Rod Insertion Monitor
7.7.1-3	Rod Deviation Comparator
7.7.1-4	Block Diagram of Steam Dump Control System
7.7.1-5	Basic Flux - Mapping System

7.0 INSTRUMENTATION AND CONTROLS

7.1 INTRODUCTION

This chapter presents the various plant Instrumentation and Control Systems by relating the functional performance requirements, design bases, system descriptions, design evaluations, and tests and inspections for each. The information provided in this chapter emphasized those instruments and associated equipment which constitute the protection system as defined in IEEE Std. 279-1971 "IEEE Standard: Criteria for Protection Systems for Nuclear Power Generating Stations."

The primary purpose of the Instrumentation and Control Systems is to provide automatic protection against unsafe and improper reactor operation during steady state and transient power operations (Conditions I, II, III) and to provide initiating signals to mitigate the consequences of faulted conditions (Condition IV). For a discussion of the four conditions see Chapter 15. The information presented in this chapter emphasizes those Instrumentation and Control Systems which are central to assuring that the reactor can be operated to produce power in a manner that insures no undue risk to the health and safety of the public.

It is shown that the applicable criteria and codes, such as the Nuclear Regulatory Commission's General Design Criteria and IEEE Standards, concerned with the safe generation of nuclear power are met by these systems.

Definitions

The definitions below establish the meaning of words in the context of their use in Chapter 7.

Channel - An arrangement of components and modules or software as required to generate a single protective action signal when required by a plant condition. A channel loses its identity where single action signals are combined.

DCS - (Distributed Control System) - Non-safety related arrangement of processing groups that contain redundant digital processor pairs that perform many plant functions - controls, interlocks, alarms, etc. Each processing pair (or group or controller) are separate and independent of the others.

DNBR - (Departure From Nucleate Boiling Ratio) - The ratio of the critical heat flux (defined as the transition from nucleate boiling to film boiling) to the actual local heat flux.

Module - Any assembly of interconnected components which constitutes an identifiable device, instrument, or piece of equipment. A module can be disconnected, removed as a unit, and replaced with a spare. It has definable performance characteristics which permit it to be tested as a unit. A module could be a card or other subassembly of a larger device, provided it meets the requirements of this definition.

Components - Items from which the system is assembled (e.g., resistors, capacitors, wires, connectors, transistors, tubes, switches, springs, etc.).

Single Failure - Any single event which results in a loss of function of a component or components of a system. Multiple failures resulting from a single event will be treated as a single failure.

Protective Action - A protective action can be at the channel or the system level. A protective action at the channel level is the initiation of a signal by a single channel when the variable sensed exceeds a limit. A protective action at the system level is the initiation of the operation of a sufficient number of actuators to effect a protective function.

Protective Function - A protective function is the sensing of one or more variables associated with a particular generating station condition signal processing and the initiation and completion of the protective action at values of the variable established in the design basis.

Type Tests - Tests made on one or more units to verify adequacy of design.

Degree of Redundancy - The difference between the number of channels monitoring a variable and the number of channels which when tripped, will cause an automatic system trip.

Minimum Degree of Redundancy - The degree of redundancy below which operation is prohibited, or otherwise restricted by the Technical Specifications.

Reproducibility - This definition is taken from SAMA Standard PMC-202-1970. Process Measurement and Control Terminology: "the closeness of agreement among repeated measurements of the output for the same value of input, under normal operating conditions over a period of time, approaching from both directions." It includes drift due to environmental effects, hysteresis, long-term drift, and repeatability. Longterm drift (aging of components, etc.) is not an important factor in accuracy requirements since, in general, the drift is not significant with respect to the time elapsed between testing. Therefore, long-term drift may be eliminated from this definition. Reproducibility, in most cases, is a part of the definition of accuracy (see below).

Accuracy - This definition is derived from SAMA Standard PMC-202-1970, Process Measurement and Control Terminology. An accuracy statement for a device falls under Note 2 of the definition of accuracy, which means reference accuracy or the accuracy of that device at reference operating conditions: "Reference accuracy includes conformity, hysteresis and repeatability." To adequately define the accuracy of a system, the term reproducibility is useful as it covers normal operating conditions. The following terms, "trip accuracy" and "indicated accuracy" etc., will then include conformity and reproducibility under normal operating conditions.

Where the final result does not have to conform to an actual process variable but is related to another value established by testing, conformity may be eliminated, and the term reproducibility may be substituted for accuracy.

Readout Devices - For consistency the final device of a complete channel is considered a readout device. This includes indicators, recorders, isolators (nonadjustable), and controllers.

Channel Accuracy - This definition includes accuracy of primary element, transmitter and rack modules. It does not include readout devices or rack environmental effects, but does include process and environmental effects on field mounted hardware. Rack environmental effects are included in the next two definitions to avoid duplication due to dual inputs.

Indicated and/or Recorded Accuracy - This definition includes channel accuracy, accuracy of readout devices and rack environmental effects.

Trip Accuracy - This definition includes comparator accuracy, channel accuracy, for each input, and rack environmental effects. This is the tolerance expressed in process terms (or percent of span) within which the complete channel must perform its intended trip function. This includes all instrument errors but no process effects such as streaming. The term "actuation accuracy" may be used where the word "trip" might cause confusion (for example, when starting pumps and other equipment).

Actuation Accuracy - Synonymous with trip accuracy, but used where the word "trip" may cause ambiguity.

Cold Shutdown - The reactor is in the cold shutdown condition when the reactor is subcritical by at least 1 percent $\Delta k/k$ and T_{avg} is $\leq$200°F with T_{avg} defined as the average temperature across the reactor vessel as measured by the hot and cold leg temperature detectors.

Hot Shutdown - The reactor is in the hot shutdown condition when the reactor is subcritical by an amount greater than or equal to the margin as specified in the SQN Technical Specifications and T_{avg} is greater than 200°F but less than or equal to T_{oper} where T_{oper} is defined as any temperature at which the reactor is critical, limited by the SQN Technical Specifications.

Phase A Containment Isolation - Closure of all non-essential process lines which penetrate containment initiated by the safety injection signal.

Phase B Containment Isolation - Closure of remaining process lines, initiated by containment high-high pressure.

Key Variables

A key variable is that single variable (or minimum number of variables) that provides primary information and most directly indicates the accomplishment of a safety function (in the case of types B and C) or the operation of a safety system (for type D) or radioactive material release (for type E). All type A variables are key variables.

Backup Information

That information, made up of additional variables, that provides supplemental information for diagnosis, backup, system status, and/or confirmatory information to the operator.

Critical Safety Function

Those safety functions that are essential to prevent a direct and immediate threat to the health and safety of the public. These are the accomplishing and maintaining of:

1. Reactivity control

2. Reactor core cooling and heat removal from the primary system

3. Reactor coolant system integrity

4. Containment integrity (Including radioactive effluent control)

Primary Information

Primary information is information that is essential for the direct accomplishment of specified safety functions; it does not include variables that may be associated with contingency actions that may also be identified in written plant procedures.

7.1.1 Identification of Safety Related Systems

7.1.1.1 Safety Related Systems

The instrumentation required to function to achieve the system responses assumed in the safety evaluations, and those needed to shut down the plant safely are given in this section.

7.1.1.1.1 Reactor Trip System

The Reactor Trip System is a functionally defined system described in Section 7.2. The equipment which provides the trip functions is identified and discussed in Section 7.2. Design bases for the Reactor Trip System are given in Paragraph 7.1.2.1.

7.1.1.1.2 Engineered Safety Features Actuation System

The Engineered Safety Features Actuation System is a functionally defined system described in Section 7.3. The equipment which provides the actuation functions is identified and discussed in Section 7.3. Design bases for the Engineered Safety Features Actuation System are given in Paragraph 7.1.2.1.

7.1.1.1.3 Vital Power Supply System

Design bases for the Vital Power Supply System are given in Paragraph 7.1.2.1. Further description of the system is provided in Section 7.6.

7.1.1.1.4 Auxiliary Control Air System

The Auxiliary Control Air System supplies essential control air to safety related items such as the auxiliary feedwater control valves; the Vacuum Relief System containment isolation valves; and dampers in the Auxiliary Building Gas Treatment System, the Emergency Gas Treatment System, and the Control Building HVAC system. Further description of the system is given in Subsection 9.3.1.

7.1.1.2 Safety Related Display Instrumentation

Display instrumentation provides the operator with information to enable him to monitor the results of Engineered Safety Features actions following a Condition II, III or IV event. Section 7.5 and Table 7.5-2 provide information required to assess plant conditions during and following an event and to maintain the plant in a hot shutdown condition, or to proceed to cold shutdown.

7.1.1.3 Instrumentation and Control System Designers

All systems discussed in Chapter 7 have definitive functional requirements developed on the basis of the Westinghouse NSSS design. The systems are supplied by Westinghouse with the exception of the vital power, auxiliary control air, and post accident monitoring systems that were designed and supplied by TVA and the DCS, which was supplied by Invensys (Foxboro Company).

7.1.1.4 Plant Comparison

A detailed comparison is provided in Section 1.3 for initial plant design and major changes from the PSAR.

7.1.2 Identification of Safety Criteria

Paragraph 7.1.2.1 gives design bases for the systems given in Paragraph 7.1.1.1. Design bases for non-safety related systems are provided in the sections which describe the systems. Conservative considerations for instrument errors are included in the accident analyses presented in Chapter 15. Functional requirements, developed on the basis of the results of the accident analyses, which have utilized conservative assumptions and parameters are used in designing these systems and a pre-operational testing program verifies the adequacy of the design. Accuracies are given in Sections 7.2, 7.3, and 7.5.

The documents listed below were considered in the design of the systems given in Subsection 7.1.1. In general, the scope of these documents is given in the document itself. This determines the systems or parts of systems to which the document is applicable. A discussion of compliance with each document for systems in its scope is provided in the referenced sections.

Because some documents were issued after design and testing had been completed, the equipment documentation may not meet the format requirements of some standards. The documents considered are:

1. "General Design Criteria for Nuclear Power Plants," Appendix A to Title 10 CFR Part 50, July 7, 1971. (See Sections 7.2, 7.3, 7.4, and 7.7).

2. "Regulatory Guide 1.11 (March, 1971) -Instrument Lines Penetrating Primary Reactor Containment," Regulatory Guides for Water Cooled Nuclear Power Plants, Division of Reactor Standards, Atomic Energy Commission, (See Paragraph 6.2.4.1 and 6.2.4.3).

3. "Regulatory Guide 1.22 (February, 1972) -Periodic Testing of Protection System Actuation Functions," Regulatory Guides for Water Cooled Nuclear Power Plants, Division of Reactor Standards, Atomic Energy Commission, (See Paragraph 7.1.2.8).

4. The Institute of Electrical and Electronic Engineers, Inc., "IEEE Standard: Criteria for Protection Systems for Nuclear Power Generating Stations," IEEE Std. 279-1971. (See Sections 7.2, 7.3, 7.6).

5. The Institute of Electrical and Electronic Engineers, Inc., "IEEE Standard Criteria for Class IE Electric Systems for Nuclear Power Generating Stations," IEEE Std. 308-1971. (See Section 7.6).

6. The Institute of Electrical and Electronic Engineers, Inc., "IEEE Standard for Electrical Penetration Assemblies in Containment Structures for Nuclear Fueled power Generating Stations," IEEE Std. 317-1971. (See Paragraph 7.1.2.4).

7. The Institute of Electrical and Electronic Engineers, Inc., "IEEE Trial-Use Standard; General Guide for Qualifying Class 1E Electric Equipment for Nuclear Power Generating Stations," IEEE Std. 323-1971. (See Paragraph 7.1.2.5).

8. The Institute of Electrical and Electronic Engineers, Inc., "IEEE Trial-Use Guide for Type Tests of Continuous-Duty Class 1E Motors Installed Inside the Containment of Nuclear Power Generating Stations," IEEE Std. 334-1971. (See Paragraph 7.1.2.10).

9. The Institute of Electrical and Electronic Engineers, Inc., "IEEE Standard Installation, Inspection, and Testing Requirements for Instrumentation and Electric Equipment During the Construction of Nuclear Power Generating Stations," IEEE Std. 336-1971. (See Paragraph 7.1.2.6)

10. The Institute of Electrical and Electronic Engineers, Inc., "IEEE Trial-Use Criteria for the Periodic Testing of Nuclear Power Generating Station Protection Systems," IEEE Std. 338-1971. (See Paragraph 7.1.2.7).

11. The Institute of Electrical and Electronic Engineers, Inc., "IEEE Trial-Use Guide for Seismic Qualification of Class 1E Electric Equipment for Nuclear Power Generating Stations," IEEE Std. 344-1971. (See Paragraph 7.1.2.11).

12. The Institute of Electrical and Electronic Engineers, Inc. "IEEE Trial-Use Guide for the Application of the Single-Failure Criterion to Nuclear Power Generating Station Protection Systems," IEEE Std. 379-1972. (See Paragraph 7.1.2.12).

13. "Regulatory Guide 1.53 (June, 1973) -Application of the Single-Failure Criterion to Nuclear Power Plant Protection Systems," Regulatory Guides for Water Cooled Nuclear Power Plants," Division of Reactor Standards, Atomic Energy Commission, (See Paragraph 7.1.2.12).

14. The Institute of Electrical and Electronic Engineers, Inc., "IEEE Standard, Qualifying Class IE Equipment for Nuclear Power Generating Stations," IEEE Standard 323-1974. (see Paragraph 7.1.2.5).

15. The Institute of Electrical and Electronic Engineers, Inc., "IEEE Standard, Criteria for Independence of Class IE Equipment and Circuits," IEEE Standard 384-1981.

16. The Institute of Electrical and Electronic Engineers, Inc., "IEEE Standard, Criteria of Safety Systems for Nuclear Power Generating Stations," IEEE Standard 603-1980.

17. The Institute of Electrical and Electronic Engineers, Inc., "ANSI/IEEE Standard, American National Standard Application Criteria for Programmable Digital Computer Systems in Safety Systems of Nuclear Power Generating Stations," ANSI/IEEE-ANS-7-4.3.2-1982.

18. The Institute of Electrical and Electronic Engineers, Inc., "IEEE Recommended Practices for Seismic Qualification of Class IE Equipment for Nuclear Power Generating Stations," IEEE Std. 344-1975. (See Paragraph 7.1.2.11).

19. The Institute of Electrical and Electronic Engineers, Inc., "IEEE Standard for Electric Penetration Assemblies in Containment Structures for Nuclear Fueled power Generating Stations," IEEE Std. 317-1976. (See Paragraph 7.1.2.4).

20. Regulatory Guide 1.105, "Instrument Setpoints for Safety-Related Systems", Revision 2 February 1986.

21. The Institute of Electrical and Electronic Engineers, Inc., “IEEE Standard for Electric Penetration Assemblies in Containment Structures for Nuclear Fueled Power Generating Stations,” IEEE Std. 317-1983. (See paragraph 7.1.2.4).

7.1.2.1 Design Bases

The technical design bases for the protection systems are provided by Westinghouse equipment specifications which consider the functional requirements for these systems and applicable criteria such as IEEE 279-1971, IEEE 317-1971, IEEE 323-1971 and the NRC General Design Criteria.

7.1.2.1.1 Reactor Trip System

The Reactor Trip System acts to limit the consequences of Condition II events (faults of moderate frequency such as loss of feedwater flow) by, at most, a shutdown of the reactor and turbine, with the plant capable of returning to operation after corrective action. The Reactor Trip System features impose a limiting boundary region to plant operation which ensures that the reactor safety limits analyzed in Chapter 15 are not exceeded during Condition II events and that these events can be accommodated without developing into more severe conditions.

The design requirements for the Reactor Trip System are derived by analyses of plant operating and fault conditions where automatic rapid control rod insertion is necessary in order to prevent or limit core or reactor coolant boundary damage. The design limits for this system are:

1. Minimum DNBR will not be less than limit value as a result of any anticipated transient or malfunction (Condition II faults).

2. Power density will not exceed the rated linear power density for Condition II faults. See Chapter 4 for fuel design limits.

3. The stress limit of the Reactor Coolant System for the various conditions will be as specified in Chapter 5.

4. Release of radioactive material will not be sufficient to interrupt or restrict public use of those areas beyond the exclusion distance or to exceed the guidelines of 10 CFR 20, "Standards For Protection Against Radiation," as a result of any Condition III fault.

5. For any Condition IV fault, release of radioactive material shall not result in an undue risk to public health and safety nor will it exceed the guidelines of 10 CFR 100, "Reactor Site Criteria."

7.1.2.1.2 Engineered Safety Features Actuation System

The Engineered Safety Features Actuation System acts to limit the consequences of certain Condition II (upset conditions such as credible small steamline breaks) and Condition III events (infrequent faults such as primary coolant spillage from a small rupture which exceeds normal charging system makeup and requires actuation of the safety injection system). The Engineered Safety Features Actuation System acts to mitigate Condition IV events (limiting faults, which include the potential for significant release of radioactive material).

The design bases for the Engineered Safety Features Actuation System are derived from the design bases given in Chapter 6 for the Engineered Safety Features. Design bases requirements of IEEE 279-1971 are addressed in Paragraph 7.3.1.2. General design requirements are given below.

1. Automatic Actuation Requirements

   The primary functional requirement of the Engineered Safety Features Actuation System is to receive input signals (information) from the various on-going processes within the reactor plant and containment and automatically provide, as output, timely and effective signals to actuate the various components and subsystems comprising the Engineered Safety Features System. These signals must assure that the Engineered Safety Features System will meet its performance objectives as outlined in Chapter 6.

   The functional diagrams presented in Figure 7.2.1-1, Sheets 5, 6, 7 and 8 provide a graphic outline of the logic associated with the ESF actuation system.

2. Manual Actuation Requirements

   The Engineered Safety Features Actuation System has provisions for manually initiating from the control room all of the functions of the Engineered Safety Features System. Manual actuation serves as backup to the automatic initiation and provides selective control of Engineered Safety Features service features.

7.1.2.1.3 Vital Power Supply System

The Vital Power Supply System provides continuous, reliable, regulated single phase AC power to all instrumentation and control equipment required for plant safety. Details of this system are provided in Section 7.6. The design bases are given below:

1. The inverter shall have the capacity and regulation required for the AC output for proper operation of the equipment supplied.

2. Redundant loads shall be assigned to different distribution panels which are supplied from different inverters.

3. Auxiliary devices that are required to operate dependent equipment will be supplied from the same distribution panel to prevent the loss of electric power in one protection set from causing the loss of equipment in another protection set. No single failure shall cause a loss of power supply to more than one distribution panel.

4. Each of the distribution panels will have access to an inverter and a standby power supply.

7.1.2.1.4 Emergency Power

Design bases and system description for the emergency power supply are provided in Chapter 8.

7.1.2.1.5 Interlocks

Interlocks are discussed in Sections 7.2, 7.3, 7.6, and 7.7. The protection (P) interlocks are given on Tables 7.2.1-2 and 7.3.1-3. These interlocks are designed to meet the requirements of paragraph 4.12 of IEEE 279-1971. Control interlocks are identified on Table 7.7.1-1. Because control interlocks are not safety related, they have not been specifically designed to meet the requirements of IEEE Protection System Standards.

7.1.2.1.6 Bypasses

Bypasses are designed to meet the requirements of IEEE 279-1971, paragraphs 4.11, 4.12, 4.13 and 4.14. A discussion of bypasses provided is given in Sections 7.2 and 7.3.

7.1.2.1.7 Equipment Protection

The criteria for equipment protection are given in Chapter 3. Equipment related to safe operation of the plant is designed, constructed and installed to protect it from damage. This is accomplished by working to accepted standards and criteria aimed at providing reliable instrumentation which is available under varying conditions. As an example, certain equipment is seismically qualified in accordance with IEEE 344-1971 (Reference 10). During construction, independence and separation is achieved, as required by IEEE 279-1971, either by barriers or physical separation. This serves to protect against complete destruction of a system by fires, missiles or other natural hazards.

7.1.2.1.8 Diversity

Functional diversity has been designed into the system. Functional diversity is discussed in Reference 1. The extent of diverse system variables has been evaluated for a wide variety of postulated accidents as discussed in Reference 2. Generally, two or more diverse protection functions would automatically terminate an accident before unacceptable consequences could occur.

For example, there are automatic reactor trips based upon nuclear flux measurements, reactor coolant loop temperature measurements, pressurizer pressure and level measurements, and reactor coolant pump underfrequency and under voltage measurements, as well as manually, and by initiation of a safety injection signal.

Regarding the Engineered Safety Features Actuation System for a LOCA, a safety injection signal can be obtained manually or by automatic initiation from diverse parameter measurements as shown in Table 7.3.1-1.

7.1.2.1.9 Setpoints

The Technical Specifications for the Sequoyah Nuclear Plant incorporate the Nominal Trip Setpoint (NTSP) and the Allowable Value (AV) for setpoints within the reactor protection system (RPS) which includes the Reactor Trip System (RTS) and the Engineering Safety Features Actuation System (ESFAS). These setpoints were analytically determined in accordance with the methodology described in references 22 and 23. Instrument spans are selected such that the AVs are at least 5 percent from the end of the instrument span. Automatic initiation of protective functions occurs at the NTSP (plus or minus the allowed tolerances). The reactor trip setpoints have been selected to ensure that core damage and loss of integrity of the reactor coolant system are prevented during anticipated operational events. The ESFAS setpoints have been selected to protect against violating core design limits and the

Reactor Coolant System (RCS) pressure boundary, and to mitigate accidents. These NTSPs are monitored and adjusted as necessary by periodic performance of surveillance tests in accordance with Technical Specification requirements.

NTSPs are chosen, in conjunction with the AV, to ensure that the Analytical Limits will not be exceeded during either accidents or anticipated operational occurrences, the NTSP is more conservative than the Analytical Limit. The AV provides an allowance to the Analytical Limit to account for unmeasurable uncertainties such as process effects to ensure that the protective action is performed under worst case conditions before the Analytical Limit is exceeded. To ensure the AV protects the Analytical Limit, the channel must be reset or confirmed to be within the As Left (AL) tolerance during periodic surveillance testing. The AL is the tolerance band on either side of the NTSP within which an instrument or instrument loop is left after calibration or setpoint verification to ensure future operability. The As Found (AF) is the tolerance band on either side of the NTSP which defines the limits of acceptable instrument performance, beyond which the channel may be considered degraded and must be evaluated for operability prior to returning to service. Conditions where the device is found outside the AF will be entered into the corrective action program for further evaluation.

The methodologies used for the determination of the AF and AL tolerances for the functions defined to be within the scope of TSTF 493 are described as follows:

> As Found tolerance is determined to be the Square Root Sum of the Squares (SRSS) combination of Reference Accuracy, Measurement and Test Equipment (M&TE) error, M&TE readability error and Drift. Other uncertainties may be included if applicable and are technically justified. As Left tolerance is determined to be the SRSS combination of Reference Accuracy, M&TE error and M&TE readability error (Reference 24). The Technical Specifications are annotated with the functions that fall under the scope of these AF and AL tolerances.

7.1.2.2 Independence of Redundant Safety Related Systems

The safety related systems in Paragraph 7.1.1.1 are designed to meet the independence and separation requirements of criterion 22 of the 1971 General Design Criteria and Paragraph 4.6 of IEEE 279- 1971. The administrative responsibility and control provided during the design and installation is discussed in Chapter 17 which address the Quality Assurance programs applied by Westinghouse and TVA.

The electrical power supply, instrumentation, and control conductors for redundant circuits of a nuclear plant have physical separation to preserve the redundancy and to ensure that no single credible event will prevent operation of the associated function due to electrical conductor damage. Critical circuits and functions include power, control and analog instrumentation associated with the operation of the Reactor Trip System or Engineered Safety Features Actuation System. Credible events shall include, but not be limited to, the effects of short circuits, pipe rupture, missiles, etc. and are considered in the basic plant design. Control board details are given in Paragraph 7.7.1.10. Detailed information pertaining to electrical cable for safety related systems is given in Paragraph 8.3.1.4 (including exceptions to the following general requirements).

7.1.2.2.1 General

1. Cables of redundant circuits will be run in separate cable trays, conduits, ducts, penetrations, etc.

2. Circuits for non-redundant functions should be run in cable trays or conduit separated from those used for redundant circuits. Where this cannot be accomplished, non-redundant circuits may be run in a cable tray, conduit, etc., assigned to a redundant function. When so routed, it must remain with that particular redundant circuit routing and will not cross-over to other redundant groups.

3. Horizontal and vertical separation will be maintained between cable trays, associated with redundant circuits.

4. Where it is impractical for reasons of equipment arrangement to provide separate cable trays, cables of redundant circuits may be isolated by physical barriers or be installed in separate metallic conduit.

5. Power and control conductors rated at 600 volts or below should not be placed in cable trays with conductors rated above 600 volts.

6. Analog or other low level type signal conductors will not be routed in cable trays containing power or control cables

7.1.2.2.2 Specific Systems

Channel independence is carried throughout the system, extending from the sensor through to the devices actuating the protective function. Physical separation is used to achieve separation of redundant transmitters. Separation of wiring is achieved using separate wireways, cable trays, conduit runs and containment penetrations for each redundant channel set. Redundant process equipment is separated by locating modules in different protection rack sets. Each redundant channel set is energized from a separate AC power feed.

There are four separate process protection rack sets. Separation of redundant process channels begins at the process sensors and is maintained in the field wiring, containment penetrations and process protection racks to the redundant trains in the logic racks. Redundant process channels are separated by locating electronics in different rack sets. Since all equipment within any rack is associated with a single protection channel set, there is no requirement for separation of wiring and components within the rack.

Independence of the logic trains is discussed in Reference 11. Two reactor trip breakers are actuated by two separate logic matrices which interrupt power to the control rod drive mechanisms. The breaker main contacts are connected in series with the power supply so that opening either breaker interrupts power to all full length shutdown and control rod drive mechanisms, permitting the rods to free fall into the core.

1. Reactor Trip System

    a. Separate routing is maintained for the four basic Reactor Trip System channel sets process sensing signals, comparator output signals and power supplies for such systems. The separation of these four channel sets is maintained from sensors to instrument racks to logic system cabinets.

    b. Separate routing of the reactor trip signals from the redundant logic system cabinets is maintained, and in addition, they are separated from the four process channel sets.

2. Engineered Safety Features Actuation System

    a. Separate routing is maintained for the four basic sets of ESF Actuation System process sensing signals, comparator output signals and power supplies for such systems. The separation of these four channel sets is maintained from sensors to instrument racks to logic system cabinets.

    b. Separate routing of the ESF actuation signals from the redundant logic system cabinets is maintained and is separated from the four process channel sets.

    c. Separate routing of control and power circuits associated with the operation of engineered safety features equipment is required to retain redundancies provided in the system design and power supplies.

3. Vital Power Supply System

   The separation criteria presented also apply to the power supplies for the load centers and busses distributing power to redundant components and to the control of these power supplies.

Reactor Trip System and Engineered Safety Features Actuation System process circuits may be routed in the same wireways provided circuits have the same power supply and channel set identity (I, II, III or IV).

7.1.2.2.3 Fire Protection

Details of fire protection are provided in the Fire Protection Report (see 9.5.1).

7.1.2.3 Physical Identification of Safety Related Equipment

Adequate identification is provided to distinguish Reactor Trip, Engineered Safety Features and Instrumentation and Control Power Supply Systems as safety related. As previously stated there are four protection channel set racks. A color coded nameplate on each rack of each set is used to identify the protection sets. The color coding of the protection set nameplates is given in section 8.3.1.4.5.

All non-rack mounted protective equipment and components are provided with an identification tag or nameplate. Small electrical components such as relays have nameplates on the enclosure which house them. All cables are numbered with identification tags. In congested areas, such as under or over the control boards, instrument racks, etc., cable trays and conduits containing redundant circuits shall be identified using permanent markings. The purpose of such markings, discussed in detail in Chapter 8, Paragraph 8.3.1.4, is to facilitate cable routing identification of future modification or additions.

Positive permanent identification of cables and/or conductors shall be made at all terminal points. There are also identification nameplates on the input panels of the solid state logic protection system.

7.1.2.4 Conformance to IEEE 317-1971 (Reference 3), IEEE 317-1976 (Reference 21), and IEEE 317-1983 (Reference 25).

Electrical penetrations and conformance with IEEE 317-1971, 317-1976, or 317-1983 "Electrical Penetration Assemblies in Containment Structures for Nuclear Fueled Power Generating Stations" are discussed in Chapter 8, Subparagraph 8.3.1.2.3.

7.1.2.5 Conformance to IEEE 323-1971 (Reference 4) and IEEE 323-1974 (Reference 16)

Reactor Trip System equipment is type tested to substantiate the adequacy of design. This is the preferred method as indicated in IEEE 323-1971. Type tests may not conform to the format guidelines set forth in Section 5.2 of IEEE 323-1971, since type tests on some equipment were performed prior to issuance of the standard. However, it has been determined by Westinghouse that the testing and documentation was comparable to that required by IEEE 323-1971.

The Eagle 21 Process Protection System has been environmentally qualified in accordance with 10CFR50.49 and IEEE 323-1974. "Topical Report Eagle 21 Microprocessor - Based Process Protection System," WCAP-12374, September 1989, provides additional qualification information for the Eagle 21 System.

7.1.2.6 Conformance to IEEE 336-1971 (Reference 5)

A discussion of conformance to IEEE 336 is given in Paragraph 8.3.1.2.2.

7.1.2.7 Conformance to IEEE 338-1971 (Reference 6)

1. The reliability goals specified in Paragraph 4.2 of Reference 6 are being developed, and adequacy of test frequencies will be demonstrated.

2. The periodic test frequency discussed in Paragraph 4.3 of Reference 6 and specified in the plant Technical Specifications, is conservatively selected to assure that equipment associated with protection functions has not drifted beyond its minimum performance requirements. If any protection channel appears to be marginal or requires more frequent adjustments due to plant condition changes, the test frequency is accelerated to accommodate the situation until the marginal performance is resolved.

3 The test interval discussed in Paragraph 5.2, Reference 6, is developed primarily on past operating experience and modified if necessary to assure that system and subsystem protection is reliably provided.

7.1.2.8 Conformance to Regulatory Guide 1.22 (February, 1972) (Reference 7)

Periodic testing of the Reactor Trip and Engineered Safety Features Actuation Systems, as described in Subsections 7.2.2 and 7.3.2, complies with NRC Regulatory Guide 1.22, "Periodic Testing of Protection System Actuation Functions." Under the present design, there are functions which are not tested at power, because to do so would render the plant in a less-safe condition. These are as follows:

1. Generation of a reactor trip by tripping the turbine;

2. Generation of a reactor trip by use of the manual trip switch;

3. Generation of a reactor trip by use of the manual safety injection switch;

4. Closing the main steam line stop valves;

5. Closing the feedwater control valves;

6. Closing of FW pump discharge valves.

The actuation logic for the functions listed is tested as described in Sections 7.2 and 7.3. As

required by Regulatory Guide 1.22, where actuated equipment is not tested during reactor operation it has been determined that:

1. There is no practicable system design that would permit operation of the equipment without adversely affecting the safety or operability of the plant;

2. The probability that the protection system will fail to initiate the operation of the equipment is, and can be maintained, acceptably low without testing the equipment during reactor operation; and

3. The equipment can routinely be tested when the reactor is shut down. Where the ability of a system to respond to a bona fide accident signal is intentionally bypassed for the purpose of performing a test during reactor operation, each bypass condition is automatically indicated to the reactor operator in the main control room by a separate annunciator for the train in test. Test circuitry does not allow two trains to be tested at the same time so that extension of the bypass condition to redundant systems is prevented.

7.1.2.9 Conformance of IEEE 308-1971 (Reference 9)

See Section 7.6 for a discussion of the power supply for the Reactor Trip System and compliance with IEEE 308.

7.1.2.10 Conformance to IEEE 334-1971 (Reference 8)

There are no Class I motors in the Reactor Trip System, thus IEEE 334 does not apply.

7.1.2.11 Conformance to IEEE 344-1971 (Reference 10) and IEEE 344-1975 (Reference 20)

The seismic testing as discussed in Section 3.10 and the references of Chapter 3 conform to the guidelines set forth in IEEE 344-1971 with the exceptions noted in Section 3.10.

The Eagle 21 Process Protection System Seismic Testing was performed in accordance with IEEE-344-1975. "Topical Report Eagle 21 Microprocessor - Based Process Protection System," WCAP-12374, September 1989, provides additional qualification information for the Eagle 21 System.

7.1.2.12 Conformance to IEEE 379-1972 and Regulatory Guide 1.53 (June, 1973) (References 1, 12 and 13)

The principles described in IEEE Std. 379-1972 were used in the design of the Westinghouse protection system. The system complies with the intent of this standard and the additional requirements of Regulatory Guide 1.53. The formal analyses required by the standard have not been documented exactly as outlined although parts of such analyses are published in various documents such as References 1, 12 and 13. Westinghouse has gone beyond the required analyses and has performed a fault tree analysis (Reference 1).

The referenced Topical Reports provide details of the analyses of the protection systems previously made to show conformance with single failure criterion set forth in Paragraph 4.2 of IEEE Std. 279-1971. The interpretation of a single-failure criterion provided by IEEE-379 does not indicate substantial differences with the Westinghouse interpretation of the criterion except in the methods used to confirm design reliability.

Established design criteria in conjunction with sound engineering practices form the bases for the Westinghouse protection systems. The Reactor Trip and Engineered Safeguards Actuation Systems are each redundant safety systems. The required periodic testing of these systems will disclose any failures or loss of redundancy which could have occurred in the interval between tests, thus ensuring the availability of these systems.

7.1.3 Electrical Penetrations

7.1.3.1 Design Bases

The electrical penetration assemblies are designed to maintain containment integrity during all design basis events including temperature rise under fault-current conditions. To assure that electric power is continuously available to operate required equipment, penetrations for redundant cables are located in two or more separate areas in the containment structure.

7.1.3.2 System Description

Either modular or canister type penetrations are used for all electrical conductors passing through the primary containment. A double pressure barrier is formed by a header plate at the end of the penetration nozzle through which the conductors pass. There are three basic types of electrical penetration assemblies: high-voltage, instrumentation, and low-voltage type. These three types are tabulated into five categories: high-voltage power, nuclear instrumentation system, control rod position indication, low-voltage power, control and indication, and thermocouple. An example of each category of canister-type penetration assembly is shown in Figures 7.1.3-1 through 7.1.3-5, respectively.

The penetration assembly is designed for insertion from the outboard end of the primary containment nozzle and is welded to the nozzle by a weld ring. Leak test equipment (valve and pressure gauge) is provided on the outboard end of each assembly. The assemblies are designed to remain functional during and after design basis events. For additional details, see Section 8.3.1.2.3.

7.1.3.3 Tests and Inspections

The original Westinghouse canister-type electrical penetration assemblies have been prototype tested, production tested, and field tested after installation for leakage. Prototype leak rate test results were comparable to the specified test requirement and found acceptable. The leak rate did not exceed 1.0×10^{-6} cubic centimeters per second of dry helium total for the prototype assembly when pressurized to 12 lb/in^2g with dry helium in an ambient temperature of 150°F.

Each original Westinghouse canister-type penetration assembly is provided with a pressure connection and gauge to allow pressurization of the assembly from outside the primary containment. Refer to Figures 7.1.3-1 through 7.1.3-5 for the location of the gauge-valve assembly on each of the five categories of electrical penetration assemblies. Each penetration assembly has passed the factory production leak rate test. This requires the assemblies to be pressurized with helium out in the open and tested for individual leaks using a sniffer type leak detector.

After all of the original Westinghouse canister-type electrical penetration assemblies were installed and became an integral part of the primary containment system, they were leak rate tested. The installed penetration assemblies were backfilled with dry nitrogen at approximately 12 lb/in^{2}g and tested to the following requirements:

Pressure	12 lb/in^{2}g for 24 hours
Temperature	Ambient (50°F to 120°F)
Maximum leakage rate for each assembly	1 x 10^{-2} cubic centimeters per second of dry nitrogen

Subsequent replacement electrical penetrations are tested per Appendix J of 10CFR50. In addition, each conductor was given an insulation resistance test and an electrical continuity test after installation of the penetration assemblies.

7.1.4 Control Room Displays and Controls

7.1.4.1 Control Room Panels

The control room panels are shown in Figure 7.1.4-1.

7.1.4.2 Safety Parameter Display System

7.1.4.2.1 System Description

The principal purpose and function of the Safety Parameter Display System (SPDS) is to aid control room personnel during abnormal and emergency conditions in determining the safety status of the plant and in assessing whether abnormal conditions warrant corrective action by operators to avoid a degraded core. During emergencies the SPDS serves as an aid to evaluating the current safety status of the plant, executing function-oriented emergency procedures, and monitoring the impact of engineered safeguards or mitigation activities. The SPDS also operates during normal operations, continuously displaying information from which the plant safety status can be readily and reliably assessed.

Each unit has its own SPDS running on the Plant Computer System. These plant computer systems also drive display equipment in the Technical Support Center (TSC) and provides plant data to the off-site computer located at the Emergency Operations Facility (EOF). Each unit's plant computer system has two color graphic monitors in the control room, which continuously display information on the Critical Safety Functions (CSF) for the SPDS.

The operators use keyboards and touch screens to request additional detailed information about the parameters used to determine the CSF status as well as other plant conditions. This information is provided in three formats: mimic, tabular, and trend displays.

The data undergoes several validation steps before being presented to the operators. When redundant sensors are used, the data received by the computer can be processed by software to determine if the quality of one or more points is questionable.

7.1.4.2.2 Design Bases

Location of SPDS

The SPDS is conveniently located to control room operators. Both units' plant computer systems main monitor and SPDS is located inside the horseshoe on panel M-19A. A second monitor located at panel M-19B also provides access to SPDS.

Continuous and Reliable Display of Plant Safety Status Information

The SPDS displays information from which the plant safety status can be readily and reliably assessed by control room personnel responsible for the avoidance of degraded and damaged core events. This is accomplished by presenting the status of each CSF on every SPDS display. Redundant sensor algorithms are used to aid the operators in determining if displayed information is reliable.

The quality of the information is identified as being good, suspect, bad, or substituted. Data is tagged as suspect if it is inconsistent with redundant sensors. Data is tagged as bad if it is outside the process sensor limits, or data acquisition system span, or because hardware checks indicate a malfunctioning input device. Data is tagged as substituted when the value is operator entered. If a point is not suspect, bad, or substituted, it is considered good. Pseudo-points are tagged as suspect if any of their constituent points are not good.

A general "health indicator" is provided on every SPDS display which provides an overall SPDS condition (operating or failed).

Concise Display of Critical Plant Variables

The SPDS parameters are from the augmented Westinghouse Owners Group (WOG) status tree displays. The six standard trees have been modified to function under both pre and post trip conditions. Two additional trees have been added to meet NUREG 0737, Supplement 1. The SPDS provides a concise display of critical plant variables which provide information to plant operators about the following critical safety functions:

Critical Safety Function	SPDS Parameter(s)
Reactivity Control	Subcriticality
Reactor Core Cooling and Heat Removal from the Primary System	Core Cooling Heat Sink Decay Heat Removal
Reactor Coolant System Integrity	Pressurized Thermal Shock Inventory
Radioactivity Control	Effluent and Area Radioactivity Containment

Critical Safety Function (continued)	SPDS Parameter(s)
Containment Conditions	Effluent and Area Radioactivity Containment

When the SPDS logic determines the plant may not be in a safe condition, the operator is informed of the problem. The operator verifies the SPDS indication is correct.

Human Factors

Human factors are taken into account in the design of the SPDS. Color coding is used to inform operators of the severity of SPDS alarm condition. Flashing is used to draw operator attention to new alarm conditions. Page keys, touch screens, or mouse commands are used for screen navigation. Alarms are acknowledged with a keystroke or touch screen at the plant computer system monitor located on panel M-19A.

Alpha-numeric information is input from a standard QWERTY keyboard.

Additional information is presented to control room personnel in various standard formats.

Electrical and Seismic Qualification

The SPDS is not qualified 1E and is not powered from a 1E power source. As such the SPDS is suitably isolated from equipment and sensors used in safety systems.

The SPDS has three power sources:

Normal: Rectified station unit board AC power inverted to 120V AC

Alternate: Station battery 250V DC inverted to 120V AC

Maintenance: Regulated 120V AC from 480V AC station unit board

The SPDS is not required to operate during or after a seismic event. SPDS equipment is designed so that it will not adversely affect any equipment important to safety, either during or after a seismic event.

7.1.4.3 Bypassed and Inoperable Status Indication

The Bypassed and Inoperable Status Indication (BISI) system is a computer-based system which provides indication and annunciation of the abnormal status of certain safety related systems which have been bypassed or deliberately placed in an abnormal condition. The BISI system meets the intent of Reg Guide 1.47 for selected ESFAS components.

The BISI system is an aid to MCR operating crews; it supplements plant administrative procedures by supplying plant safety system status. The BISI is not a safety grade system and is not required to operate after an accident. The BISI system is not required to prevent or

mitigate the consequences of any accidents. As such, the BISI system is properly isolated and separated from safety systems.

The BISI system provides component level, system level, and train level indication of ESFAS actuated components which do not fail in their ESFAS actuated condition. When a BISI monitored component or required support system is determined to be in a non-safe (abnormal) condition, MCR personnel are alerted visually and audibly to the situation. The final determination of the bypassed or inoperable status of the system, and any associated action, is left up to the licensed reactor operators.

The following systems are monitored by BISI: 1) Chemical and Volume Control; 2) Component Cooling; 3) Containment Spray; 4) Control Air; 5) Diesel Generator; 6) Containment Air Return Fans; 7) Essential Raw Cooling Water; 8) Main and Auxiliary Feedwater; 9) Residual Heat Removal; 10) Safety Injection; and 11) Air Cleanup Systems.

Components must meet all three of the following conditions for the device to be monitored by the BISI system:

1. Could render inoperable a redundant portion of the protection system, or systems related to the protection system required to be operable to perform their safety-related functions; and

2. Is expected to be rendered inoperable more frequently than once a year; and

3. Is expected to occur when the affected system is normally required to be operable per Technical Specifications.

Note: The safety related room coolers are not monitored by BISI. The operable status of these components/systems are controlled by administrative procedures.

The BISI system software is executed on the same plant computer system used for the Safety Parameter Display System (SPDS) and Technical Support Center (TSC). The computer inputs consist of signals which reflect the status of monitored components. The initial signal may be generated by a limit switch, relay contact, or similar device. The computer processes the incoming signals and generates appropriate outputs on the monitors located in the MCR.

In accordance with Section D.4 of Reg Guide 1.47, the operator has the capability to manually declare a BISI system abnormal for cases where a system is inoperable but the computer software algorithms do not make the same determination. The operator cannot defeat the BISI indication for a system determined to be in an abnormal condition by the computer but determined to be normal by the operator. Some BISI monitored system alarms will be inhibited based on the plant mode as indicated by the plant computer system.

7.1.4.4 Distributed Control System Displays

The Distributed Control System (DCS) utilizes four flat panel display control areas, one on M-3, one on M-14, one on M-19A and one on M-19B along with their associated keyboard or numeric key pads and point/click devices. These display controls are connected to their respective independent display servers located in the Auxiliary Instrument Room. These servers, through an independent computer network, access the various control processing groups that make up the DCS. The failure of one display processor will fail it's associated displays, leaving the second redundant processor and its associated displays fully capable of providing the operator with display and control functions needed to fully operate the plant.

Through these DCS displays the operator may control and monitor the various plant processes or variables that are controlled by the DCS system. These displays, using their keyboards or numeric key pads along with their point/click devices, provide a secondary control access point for the plant controls systems that have manual-auto stations in the Main Control Room. Should a manual-auto control station fail or be removed from service for maintenance, any DCS display can then be used to provide operator access to make necessary control functions if necessary.

These displays are powered by reliable power from the 120 VAC Vital Instrument Power Boards and the Technical Support System inverters. The plant can typically be operated without these displays being in service as the manual-auto stations provide the primary main control room access. The displays provide parameter display values and provide process trends in monitoring plant operations. When maintenance is required for DCS components, affected channels or inputs may be taken out of scan by the operator at any of the MCR DCS display stations to prevent plant upsets by the maintenance activity.

The displays use similar graphics color coding and symbols as the design of the SPDS and plant Integrated Computer System. The background color of the DCS displays differ from the ICS/SPDS background to ensure they are not mistaken for each other. Access to the DCS control functions is controlled by user name and password. To enact a control action from the display, the operator has to acknowledge a two-step process to help prevent inadvertent system operation.

7.1.5 References

1. Gangloff, W. C., and W. D. Loftus, "An Evaluation of Solid-State Logic Reactor Protection in Anticipated Transients," WCAP-7706-L, (Westinghouse NES Proprietary), and WCAP-7706, September 1971.

2. Burnett, T.W.T., "Reactor Protection System Diversity in Westinghouse Pressurized Water Reactors," WCAP-7306, April 1969.

3. The Institute of Electrical and Electronic Engineers, Inc., "IEEE Standard for Electrical Penetration Assemblies in Containment Structures for Nuclear Fueled Power Generating Stations," IEEE Standard 317-1971.

4. The Institute of Electrical and Electronic Engineers, Inc., "IEEE Trial-Use Standard, General Guide for Qualifying Class 1E Electrical Equipment for Nuclear Power Generating Stations," IEEE Standards 323-1971.

5. The Institute of Electrical and Electronic Engineers, Inc., "IEEE Standard, Inspection and Testing Requirements for Instrumentation and Electrical Equipment During the Construction of Nuclear Power Generating Stations," IEEE Standard 336-1971.

6. The Institute of Electrical and Electronic Engineers, Inc., "IEEE Trial-Use Criteria for the Periodic Testing of Nuclear Power Generating Station Protection Systems," IEEE Standard 338-1971.

7. Division of Reactor Standards, Atomic Energy Commission, "Regulatory Guide 1.22 (February 1972), Periodic Testing of Protection System Actuation Functions," Regulatory Guides for Water Cooled Nuclear Power Plants.

8. The Institute of Electrical and Electronic Engineers, Inc., "IEEE Trial-Use Guide for Type Tests of Continuous-Duty Class 1E Motors Installed Inside the Containment of Nuclear Power Generating Stations," IEEE Standard 334-1971.

9. The Institute of Electrical and Electronic Engineers, Inc., "IEEE Standard, Criteria for Class 1E Electrical Systems for Nuclear Power Generating Stations," IEEE Standard 308-1971.

10. The Institute of Electrical and Electronic Engineers, Inc., "IEEE Trial-Use Guide for Seismic Qualification of Class 1E Electrical Equipment for Nuclear Power Generating Stations," IEEE Standard 344-1971.

11. Katz, D. N., "Solid-State Logic Protection System Description," WCAP-7672, June 1971.

12. Gangloff, W. C., "An Evaluation of Anticipated Operational Transients in Westinghouse Pressurized Water Reactors," WCAP-7686-L, March 1971 (Westinghouse NES Proprietary), and WCAP-7486, May 1971.

13. Salvatori, R., "Anticipated Transients Without Reactor Trip in Westinghouse Pressurized Water Reactors," WCAP-8096, April 1973.

14. The Institute of Electrical and Electronic Engineers, Inc., "IEEE Standard, Criteria for Protection Systems for Nuclear Power Generating Stations," IEEE Standard 279-1971.

15. Regulatory Guide 1.47 "Bypassed and Inoperable Status Indications for Nuclear Power Plant Safety Systems," Rev. 0.

16. The Institute of Electrical and Electronic Engineers, Inc., "IEEE Standard, Qualifying Class 1E Equipment for Nuclear Power Generating Stations," IEEE Standard 323-1974.

17. The Institute of Electrical and Electronic Engineers, Inc., "IEEE Standard, Criteria for Independence of Class 1E Equipment and Circuits," IEEE Standard 384-1981.

18. The Institute of Electrical and Electronic Engineers, Inc., "IEEE Standard, Criteria of Safety Systems for Nuclear Power Generating Stations," IEEE Standard 603-1980.

19. The Institute of Electrical and Electronic Engineers, Inc., "ANSI/IEEE Standard, American National Standard Application Criteria for Programmable Digital Computer Systems in Safety Systems of Nuclear Power Generating Stations," ANSI/IEEE-ANS-7-4.3.2-1982.

20. The Institute of Electrical and Electronic Engineers, Inc., "IEEE Recommended Practices for Seismic Qualification of Class 1E Equipment for Nuclear Power Generating Stations," IEEE Std. 344-1975.

21. The Institute of Electrical and Electronic Engineers, Inc., "IEEE Standard for Electric Penetration Assemblies in Containment Structures for Nuclear Fueled Power Generating Stations," IEEE Standard 317-1976.

22. Tuley, C.R., "Westinghouse Setpoint Methodology for Protection System, Sequoyah Units 1 and 2, Eagle 21 Version", WCAP-11239 Rev. 6, (Westinghouse Proprietary Class 2).

23. ISA-S67.04 - 1982. "Setpoints for Nuclear Safety-Related Instrumentation Used in Nuclear Power Plants".

24. Sequoyah Licensing Amendment Request (LAR) SQN-TS-11-10, Conversion to NUREG-1431, Rev. 4.0 Commitment NCO 115301629 (RIMS # L44131122008).

25. The Institute of Electrical and Electronic Engineers, Inc., “IEEE Standard for Electric Penetration Assemblies in Containment Structures for Nuclear Fueled Power Generating Stations,” IEEE Standard 317-1983.

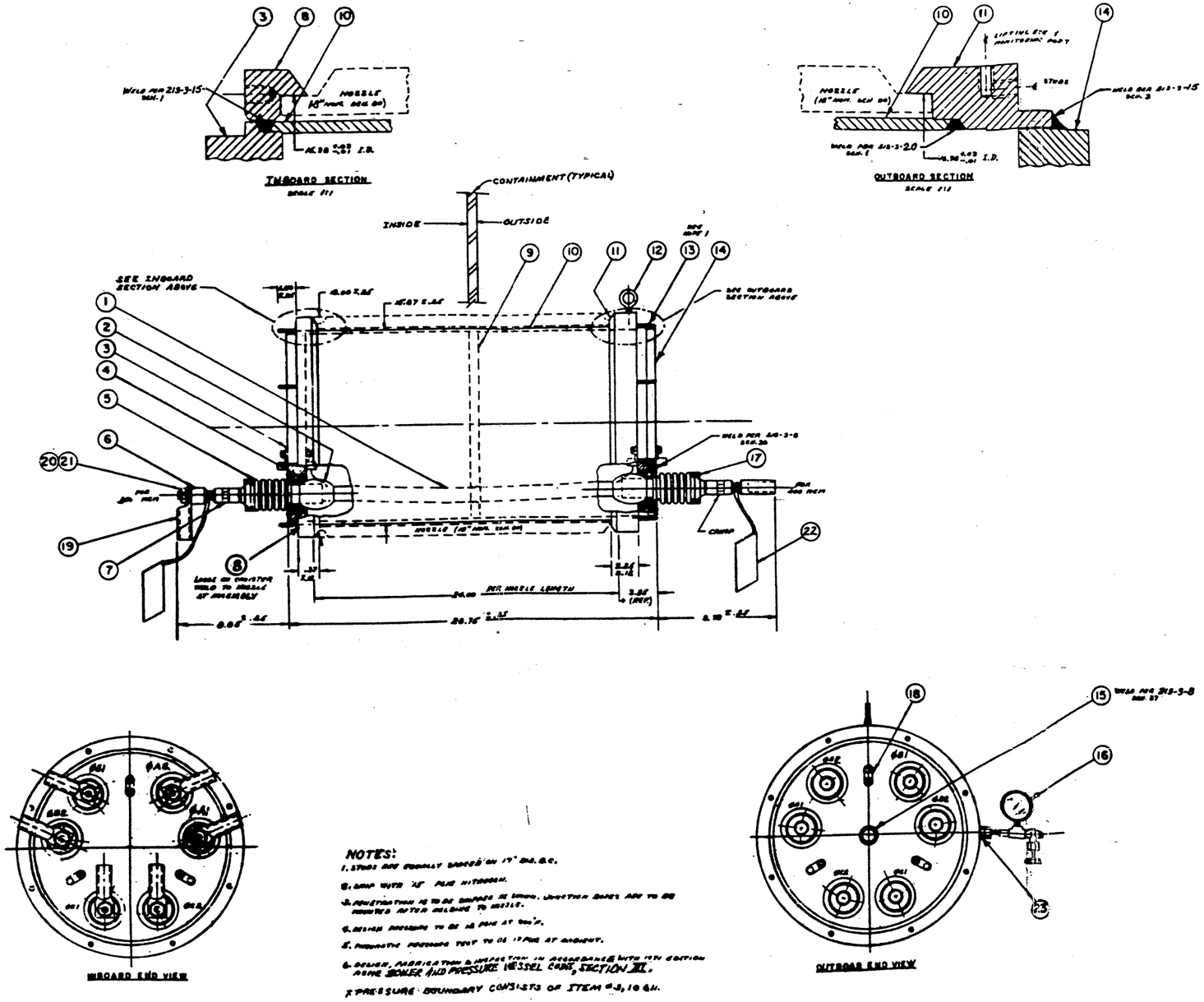

ITEM	REQ.	MATERIAL
1	6	CABLE - SEE - [illegible] WITH SHIELD
2	16	STUDS CONE
3	1	INBOARD HEADER SA240 TYPE 304
4	–	EPOXY - SN - IRETAL
5	12	CERAMIC BUSHING
6	12	CONNECTOR MONC COPPER
7	12	TERMINAL IDENTIFICATION BRL
8	1	INBOARD WELD RING 10" [illegible] SA182
9	1	POLYESTER FIBERGLAS FILLED [illegible]
10	1	CONDUCTOR 10" [illegible] SA-[illegible]
11	1	OUTBOARD WELD RING 10" [illegible] SA182
12	1	LIFTING EYE
13	16	3/8-16 STUDS - 2" LONG
14	1	OUTBOARD HEADER SA240 TYPE 304
15	1	PLUG - 304 ST.ST.
16	1	GAGE-VALVE ASSEMBLY
17	–	ELBOWS 90°
18	12	BLACKBURN LUG W-126
19	6	BOMBOY STYLE 1020
20	6	BRASS HEX. NUT, 5/8-11
21	6	BRASS FLAT WASHER, 5/8
22	2	NON-DESTRUCTABLE LABEL [illegible]
23	1	CAJON CONNECTOR [illegible]

Figure 7.1.3-1 Electrical Penetration High-Voltage Power Penetration Assembly

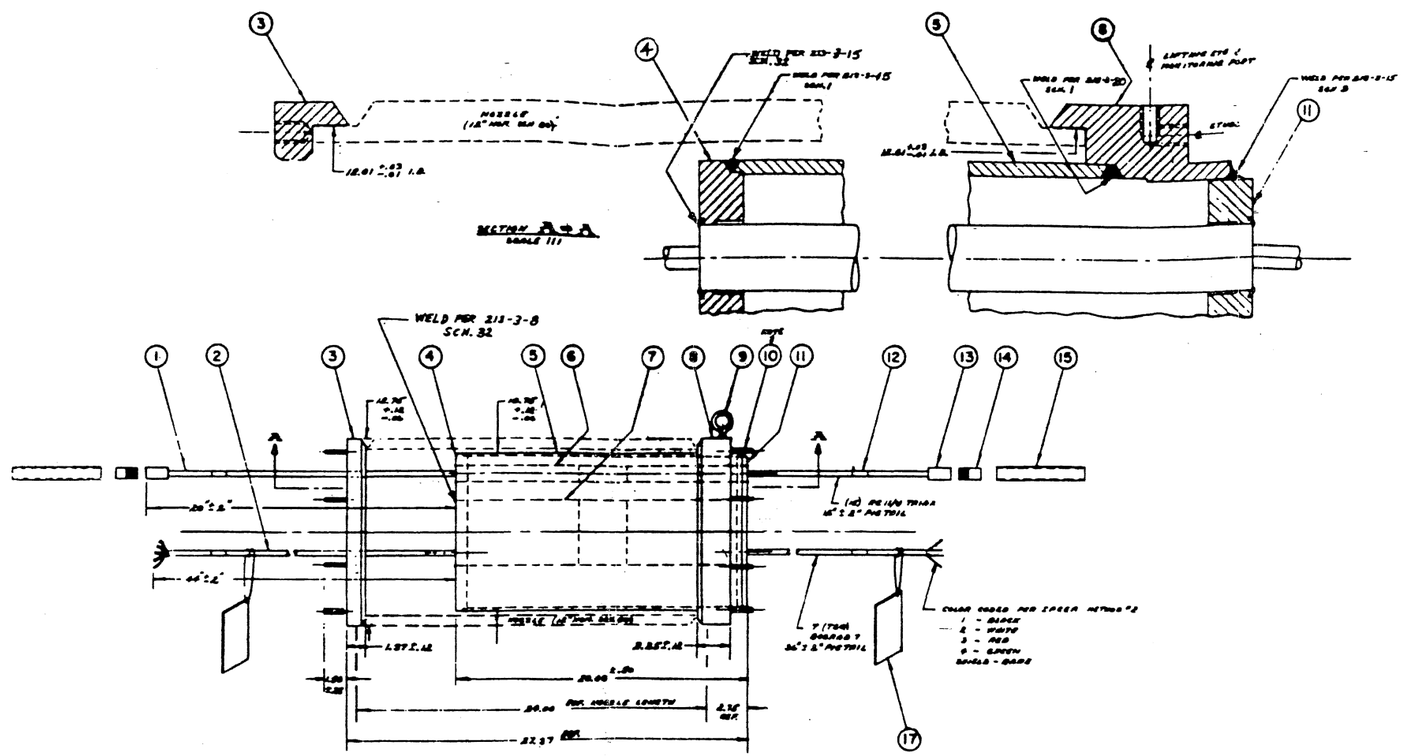

ITEM	REQ	MATERIAL
1	30	[illegible]
2	16	1/4" TUNTUS [illegible]
3	1	[illegible]
4	1	[illegible]
5	1	[illegible]
6	15	TRIAXIAL SEAL (SEMICO-GLASS)
7	1	TRI SEAL (METAL-CERAMIC)
8	1	[illegible]
9	1	LIFTING EYE
10	16	[illegible]
11	1	[illegible]
12	46	[illegible]
13	30	[illegible]
14	30	[illegible]
15	30	[illegible]
16	1	GAGE-VALVE ASSEMBLY
17	2	NON-DESTRUCTABLE INFO LABEL
18	1	CANON CONNECTOR [illegible]

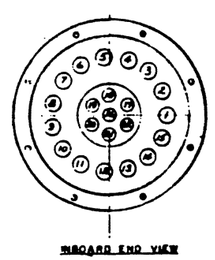

NOTES:

1. [illegible]
2. [illegible]
3. PENETRATION TO BE SHAPED [illegible] JUNCTION BOXES ARE TO BE MOUNTED AFTER WELDING TO VESSEL.
4. DESIGN PRESSURE TO BE 15 PSIG AT 300°F.
5. PNEUMATIC PRESSURE TEST TO BE 17 PSIG [illegible]
6. DESIGN, FABRICATION & INSPECTION IN ACCORDANCE WITH [illegible] ASME BOILER AND PRESSURE VESSEL CODE, SECTION III.
7. PRESSURE BOUNDARY CONSISTS OF ITEMS NO. 4,5,6,7 & 8.

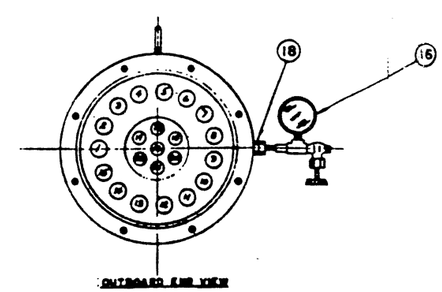

Figure 7.1.3-2 Electrical Penetration Nuclear Instrumentation System Penetration Assembly

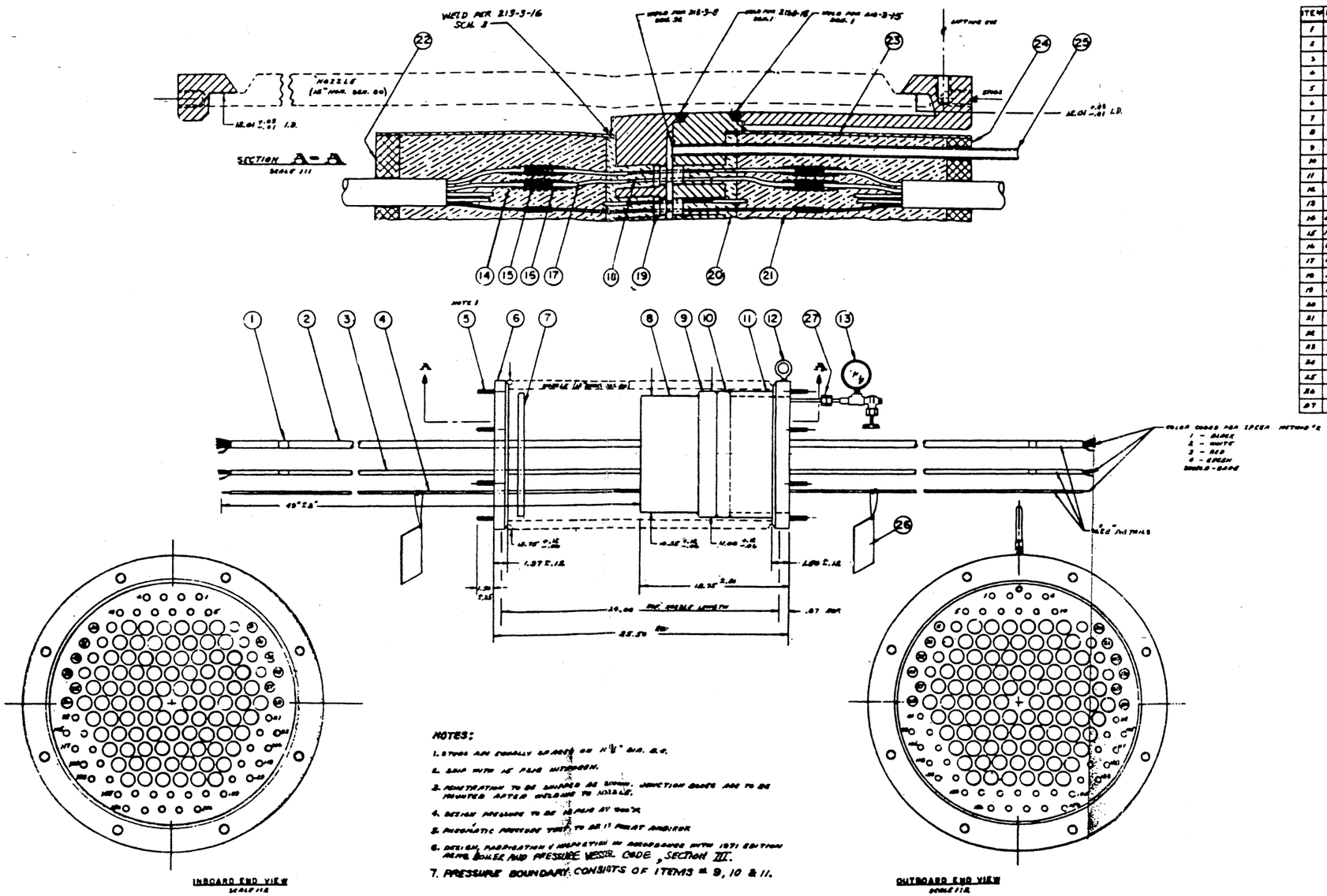

ITEM	REQ.	MATERIAL
1	300	CABLE IDENTIFICATION NO.
2	120	PIG TAIL 4/C TWISTED SHIELDED
3	60	1/2" PIG TAIL 4/C TWISTED SHIELDED
4	60	1/2" PIG TAIL 7/C 7 STRAND, GOLD
5	16	3/4-4 STUDS - 2" LG
6	1	4" HOT WELD PIPE 16" SCH 80 316 STL SEAMLESS
7	1	BRAZING DISK PORCELAIN PORCELAIN FILLED
8	1	INBOARD SUPPORT BRASS TYPE 304
9	1	INBOARD MANIFOLD 60 304 TYPE 304
10	1	OUTBOARD MANIFOLD 60 304 TYPE 304
11	1	CONNECTOR-WELD PIPE 16" SCH 80 316 STL SEAMLESS
12	1	LIFTING EYE
13	1	GAGE - VALVE ASSEMBLY
14	600	POLYPAK 316 HEAT SHRINK INSULATION
15	100	BUTT SPLICE
16	600	SILICONE FIBERGLASS INSULATION
17	600	SILICONE FIBERGLASS INSULATION
18	600	1/2 PIG TAIL CONNECTOR
19	138	INSULATING BUTTON, POLYPAK PAINT
20	—	SEALING COMPOUND
21	—	EPOXY POTTING
22	1	INBOARD SPACER POLYESTER FIBERGLASS FILLED
23	1	OUTBOARD SUPPORT BRASS TYPE 304
24	1	OUTBOARD SPACER POLYESTER FIBER GLASS FILLED
25	1	PORTICE TUBE 1.5" TYPE 304
26	2	NON-RESTRICTABLE HOSE LOOPS
27	1	CAJON COUPLING 6VCO

COLOR CODED PER SPECIFICATIONS
1 - BLACK
2 - WHITE
3 - RED
4 - GREEN
SHIELD - BARE

Figure 7.1.3-3 Electrical Penetration Control Rod Position Indication Assembly

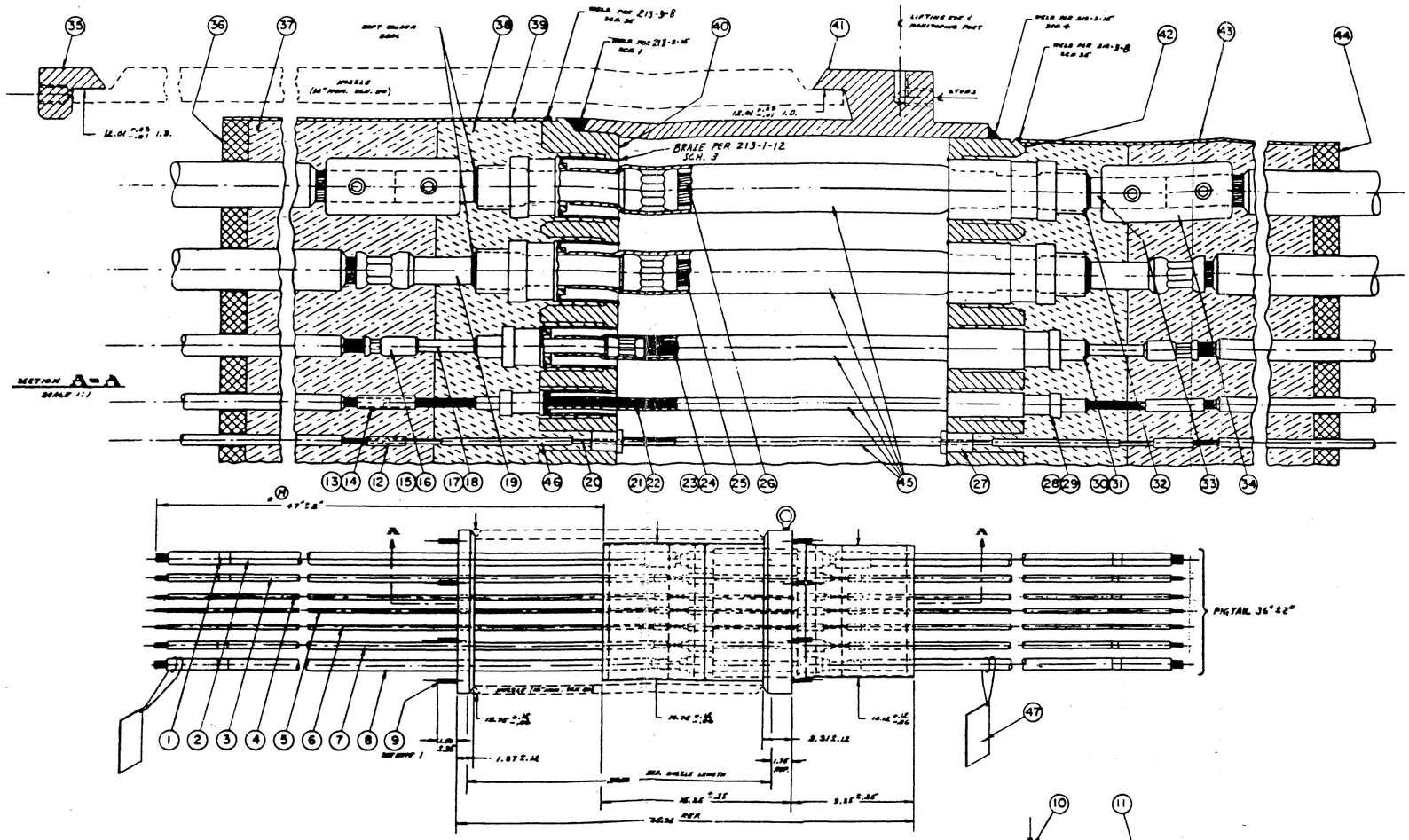

NOTES:

1. STUDS ARE EQUALLY SPACED ON 4 1/2" DIA. B.C.
2. MAP WITH 16 PINS OUTBOARD.
3. PENETRATION TO BE BRAZED AS SHOWN. JUNCTION BOXES ARE TO BE MOUNTED AFTER INSTALLATION.
4. BRAZE PRESSURE TO BE 25 PSIG AT 300°F.
5. PNEUMATIC PRESSURE TEST TO BE 17 PSI AT AMBIENT.
6. DESIGN, FABRICATION & INSPECTION IN ACCORDANCE WITH 1971 EDITION PART, BOILER AND PRESSURE VESSEL CODE, SECTION III.
7. PRESSURE BOUNDARY CONSISTS OF ITEMS # 40, 41.

ITEM	REQ.	MATERIAL
1	100	CABLE IDENTIFICATION NO.
2	6	#8 AWG 1/C 37 STRAND, COPPER
3	12	#4/0 AWG 1/C 19 STRAND, COPPER
4	12	#1/0 AWG 1/C 19 STRAND, COPPER
5	40	#12 AWG 1/C 19 STRAND, COPPER
6	18	#8 AWG 1/C 19 STRAND, COPPER
7	18	#4/0 AWG 1/C 7 STRAND, COPPER
8	12	#4/0 AWG 1/C 19 STRAND, COPPER
9	16	3/8-16 STUDS - 8" LG
10	1	LIFTING EYE
11	1	GAGE-VALVE ASSEMBLY
12	40	#12 BUTT SPLICE
13	18	#8 BUTT SPLICE
14	12	#6 BUTT SPLICE
15	12	#4 BUTT SPLICE
16	12	#4/0 BUTT SPLICE
17	12	#6 SOLID CU. CONDUCTOR
18	12	#10 SOLID CU. CONDUCTOR
19	12	#4/0 SOLID CU. CONDUCTOR
20	20	#12 AWG SOLID CU. CONDUCTOR
21	3	#8 AWG 19 STRAND CU. CONDUCTOR
22	6	#6 AWG 19 STRAND CU. CONDUCTOR
23	6	#6 AWG 7 STRAND CU. CONDUCTOR
24	6	#4/0 AWG 19 STRAND CU. CONDUCTOR
25	6	#4/0 AWG 19 STRAND CU. CONDUCTOR
26	4	#500 MCM 37 STRAND CU. CONDUCTOR
27	40	#12 POLYSULPHONE INSULATING BUTTON
28	18	#8 CERAMIC FEED-THRU
29	12	#6 CERAMIC FEED-THRU
30	12	#4 CERAMIC FEED-THRU
31	12	#4/0 CERAMIC FEED-THRU
32	20	#500 MCM CERAMIC FEED-THRU
33	8	#500 MCM SOLID CU. CONDUCTOR
34	8	500 MCM LOCK-TITE CONNECTOR
35	1	INBOARD WELDING [illegible]
36	1	INBOARD LARGE POLYESTER MONOFILAMENT FILTER
37	—	EPOXY POTTING
38	—	SILICONE RUBBER POTTING
39	1	INBOARD LARGE [illegible] TYPE 304
40	1	INBOARD SCHEDULE [illegible] TYPE 304
41	1	CONNECTOR [illegible]
42	1	OUTBOARD [illegible] TYPE 304
43	1	OUTBOARD LARGE [illegible] TYPE 304
44	1	OUTBOARD LARGE POLYESTER MONOFILAMENT FILTER
45	57	SILICONE RUBBER PROPRIETARY SLEEVE GRADE A
46	40	POLYAMIDE 105°C HEAT SHRINK WALL [illegible]
47	2	NON-DESTRUCTABLE INFO LABEL
48	1	CANON CONNECTOR [illegible]

Figure 7.1.3-4 Electrical Penetration Low-Voltage Power, Control, and Indication Assembly

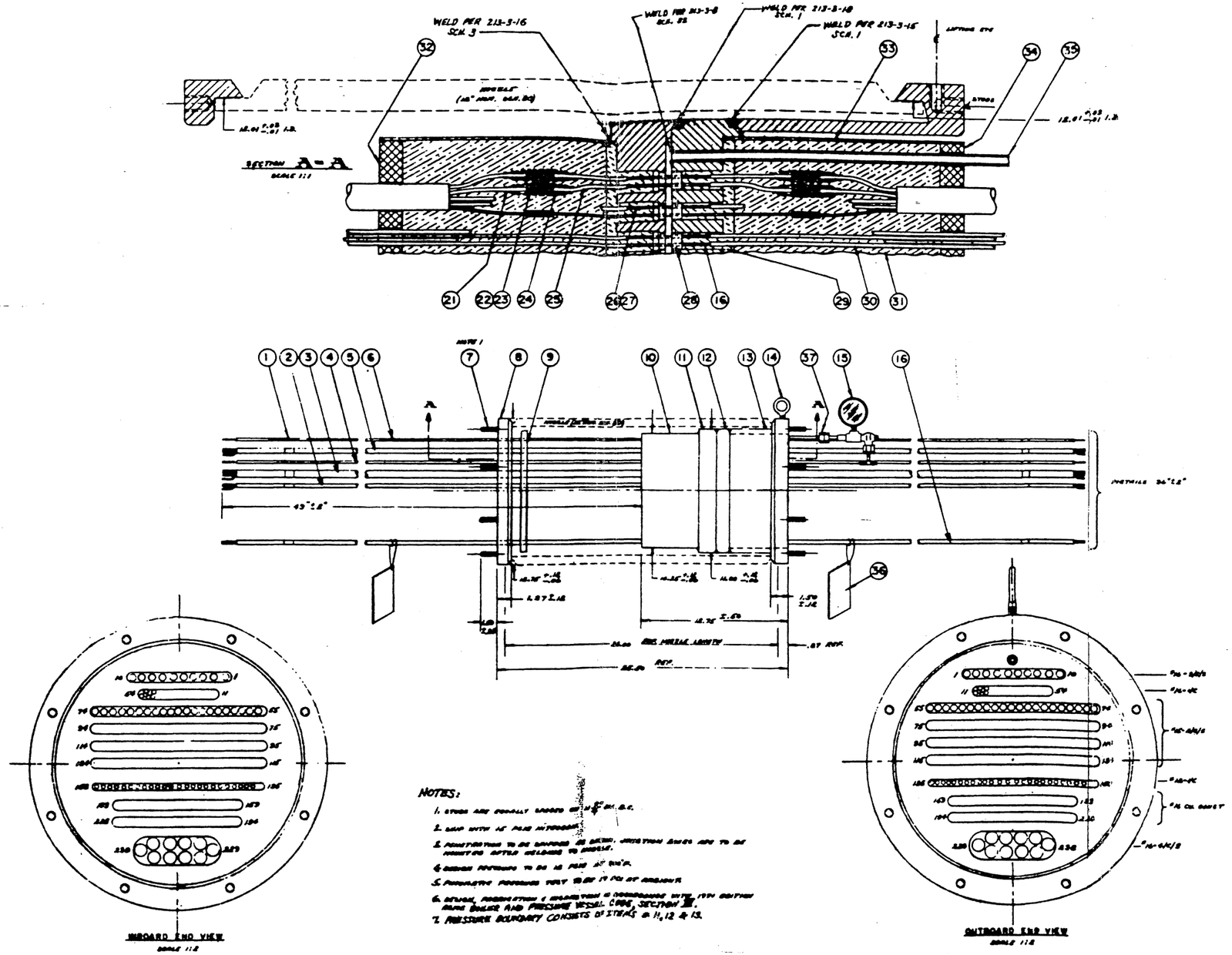

ITEM	REQ.	MATERIAL
1	002	CABLE [illegible]
2	100	[illegible]
3	80	[illegible]
4	20	[illegible]
5	20	[illegible]
6	07	[illegible]
7	16	[illegible]
8	1	[illegible]
9	1	[illegible]
10	1	[illegible]
11	1	[illegible]
12	1	[illegible]
13	1	[illegible]
14	1	LIFTING EYE
15	1	[illegible]
16	70	[illegible]
17		
18		
19		
20		
21	256	[illegible]
22	90	[illegible]
23	005	[illegible]
24	256	[illegible]
25	256	[illegible]
26	000	[illegible]
27	20	[illegible]
28	142	[illegible]
29	—	[illegible]
30	200	[illegible]
31	—	EPOXY PUTTY
32	1	[illegible]
33	1	[illegible]
34	1	[illegible]
35	1	[illegible]
36	2	[illegible]
37	1	[illegible]

Figure 7.1.3-5 Electrical Penetration Thermocouple Penetration Assembly

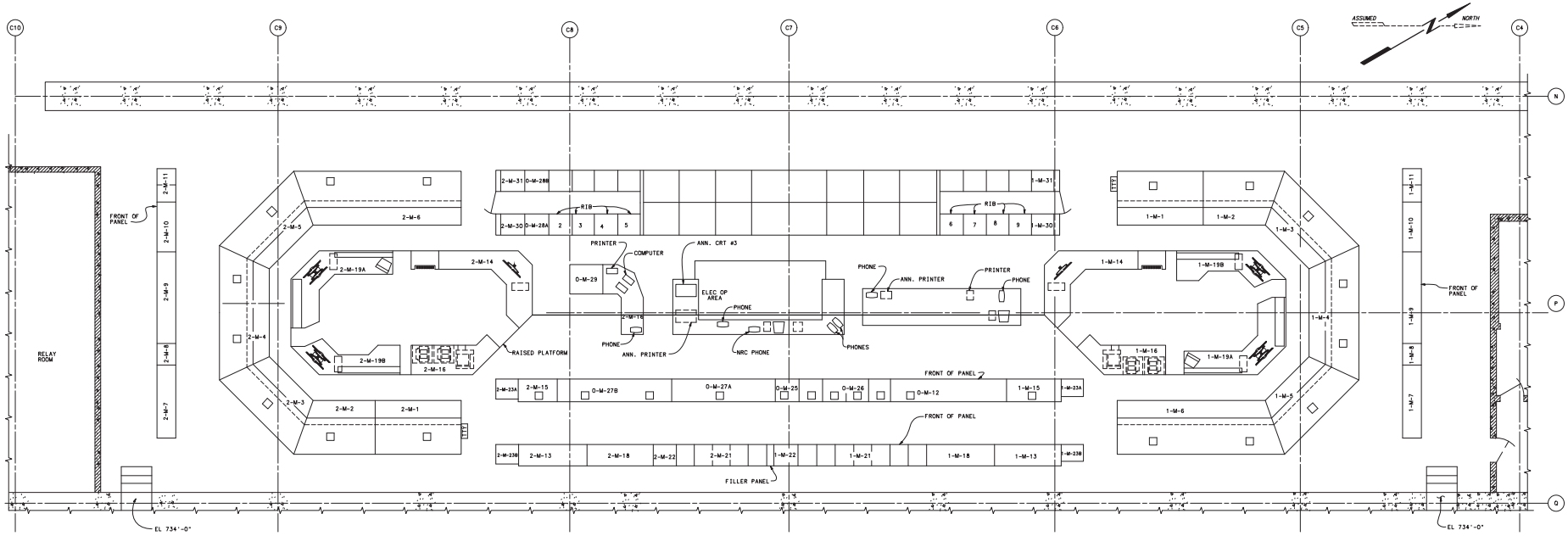

PLAN EL 732'-0"

CONTROL PANEL NOMENCLATURE

UNIT 1 PANEL NO.	UNIT 2 PANEL NO.	
1-M-1	2-M-1	GENERATOR AND AUXILIARY POWER
1-M-2	2-M-2	TURBINE CONTROL
1-M-3	2-M-3	FEEDWATER STEAM, AND CONDENSATE
1-M-4	2-M-4	REACTOR CONTROL
1-M-5	2-M-5	REACTOR COOLANT SYSTEM AND AUXILIARY STEAM
1-M-6	2-M-6	ENGINEERED SAFEGUARDS SYSTEMS AND AUXILIARY SYSTEMS
1-M-7	2-M-7	CIRCUIT BREAKERS
1-M-8	2-M-8	TURBINE SUPERVISORY CONTROL
1-M-9	2-M-9	VENTILATION, ICE CONTAINMENT, AND REACTOR BLDG
1-M-10	2-M-10	TEMPERATURE MONITORING
1-M-11	2-M-11	VENTILATION (UNIT 1), SPARE (UNIT 2)
1-M-13	2-M-13	NEUTRON MONITORING
1-M-14	2-M-14	DESK
1-M-15	2-M-15	UNIT WATER SERVICES
1-M-16	2-M-16	TCS PRINTERS
1-M-18	2-M-18	TRAVELING INCORE SYSTEM
1-M-19A	2-M-19A	DESK
1-M-19B	2-M-19B	DESK
1-M-21	2-M-21	ANNUNCIATOR CABINET
1-M-22	2-M-22	ANNUNCIATOR DEMULTIPLEXER
1-M-23A	2-M-23A	AUX BLDG HELB DETECTION
1-M-23B	2-M-23B	SPARE
1-M-30	2-M-30	POST ACCIDENT RADIATION MONITORING
1-M-31	2-M-31	POST ACCIDENT RADIATION MONITORING

PANELS COMMON TO BOTH UNITS

O-M-25	MONITORING PANEL
O-M-26	DIESEL GENERATOR CONTROL
O-M-27A	ESSENTIAL RAW COOLING WATER
O-M-27B	COMPONENT COOLING WATER
O-M-12	RADIATION MONITORING AND RECORDING
O-M-28A	SPARE
O-M-28B	SPARE
O-M-29	FIRE DETECTION MONITOR PANEL

SEQUOYAH NUCLEAR PLANT
FINAL SAFETY
ANALYSIS REPORT

FIGURE 7.1.4-1
LAYOUT OF CONTROL BOARDS

(REVISED BY AMENDMENT 28)

CAD MAINTAINED DRAWING

7.2 REACTOR TRIP SYSTEM

7.2.1 Description

7.2.1.1 System Description

The Reactor Trip System automatically keeps the reactor operating within a safe region by shutting down the reactor whenever the limits of the region are approached. The safe operating region is defined by several considerations such as mechanical/hydraulic limitations on equipment, heat transfer phenomena and nuclear phenomena. Therefore, the Reactor Trip System keeps surveillance on process variables which are directly related to equipment mechanical limitations, such as pressure, pressurizer water level (to prevent water discharge through safety valves, and uncovering heaters) and also on variables which directly affect the heat transfer capability of the reactor (e.g., flow, reactor coolant temperatures). Still other parameters utilized in the Reactor Trip System are calculated from various process variables. In any event, whenever a direct process or calculated variable exceeds a setpoint the reactor will be shut down in order to protect against either gross damage to fuel cladding or loss of system integrity which could lead to release of radioactive fission products into the containment.

The following systems make up the Reactor Trip System:

1. Process Instrumentation and Control System (References 1 and 17)

2. Nuclear Instrumentation System (Reference 2)

3. Solid State Logic Protection System (Reference 3)

4. Reactor Trip Switchgear (Reference 3)

5. Manual Actuation Circuit

The Reactor Trip System consists of up to four redundant sensors and associated process protection circuitry and two redundant digital logic trains. The process protection circuitry monitors various plant parameters and provides inputs to the digital logic trains. The digital logic trains develop the logic necessary to automatically open the reactor trip breakers.

Each of the two trains, A and B, is capable of opening a separate and independent reactor trip breaker, RTA and RTB, respectively. The two trip breakers in series connect three phase AC power from the rod drive motor generator sets to the rod drive power cabinets, as shown on Figure 7.2.1-1, Sheet 2. During plant power operation, a DC undervoltage coil on each reactor trip breaker holds a trip plunger out against its spring, allowing the power to be available at the rod control power supply cabinets.

For a reactor trip, 1) a loss of DC voltage to the undervoltage coil releases the trip plunger and 2) the shunt trip coil energizes, either of which will trip open the breaker. When either of the trip breakers opens, power is interrupted to the rod drive power supply, and the control rods fall, by gravity, into the core. The rods cannot be withdrawn until an operator resets the trip breakers. The trip breakers cannot be reset until the bistable which initiated the trip is re-energized. Bypass breakers BYA and BYB are provided to permit testing of the trip breakers, as discussed in 7.2.2.2.3.

7.2.1.1.1 Functional Performance Requirements

The Reactor Trip System automatically initiates reactor trip:

1. Whenever necessary to prevent fuel damage for an anticipated transient (Condition II).

2. To limit core damage for infrequent faults (Condition III).

3. So that the energy generated in the core is controlled to limit fuel damage such that 10 CFR 100 dose limits are met and peak clad temperature is less than the maximum allowed value for limiting faults (Condition IV).

The Reactor Trip System initiates a turbine trip signal whenever reactor trip is initiated to prevent the reactivity insertion that would otherwise result from excessive reactor system cooldown and to avoid unnecessary actuation of the Engineered Safety Features Actuation System.

The Reactor Trip System provides for manual initiation of reactor trip by operator action.

7.2.1.1.2 Reactor Trips

The various reactor trip circuits automatically open the reactor trip breakers whenever a condition monitored by the Reactor Trip System reaches a preset level. To ensure a reliable system, high quality design, components, manufacturing, quality control and testing is used. In addition to redundant channels and trains, the design approach provides a reactor trip system which monitors numerous system variables by different means, i.e., protection system functional diversity. The extent of this diversity has been evaluated for a wide variety of postulated accidents and is detailed in Reference 7.

Table 7.2.1-1 provides a list of reactor trips which are described below.

1. Nuclear Overpower Trips

   The specific trip functions generated are as follows:

   a. Power range high neutron flux trip.

      The power range high neutron flux trip circuit trips the reactor when two of the four power range channels exceed the trip setpoint.

      There are two independent bistables each with their own trip setting (a high and a low setting) per channel (four channels total). The high trip setting provides protection during normal power operation and is always active. The low trip setting, which provides protection during startup, can be manually bypassed when two out of the four power range channels read above approximately 10 percent power (P-10). Three out of the four channels below 10 percent automatically reinstates the trip function. Refer to Table 7.2.1-2 for a listing of all protection system interlocks.

   b. Intermediate range high neutron flux trip

      The intermediate range high neutron flux trip circuit trips the reactor when one out of the two intermediate range channels exceed the trip setpoint. This trip, which provides

protection during reactor startup, can be manually blocked if two out of four power range channels are above approximately 10 percent power (P-10). Three out of the four power range channels below this value automatically reinstates the intermediate range high neutron flux trip. The intermediate range channels (including detectors) are separate from the power range channels. The intermediate range channels can be individually bypassed at the nuclear instrumentation racks to permit channel testing at any time under prescribed administrative procedures and only under the direction of authorized supervision. This bypass action is annunciated on the control board.

c. Source range high neutron flux trip

The source range high neutron flux trip circuit trips the reactor when one of the two source range channels exceeds the trip setpoint. This trip, which provides protection during reactor startup and plant shutdown, can be manually bypassed when one of the two intermediate range channels reads above the P-6 setpoint value (source range outputs disabled and intermediate range on scale power level) and is automatically reinstated when both intermediate range channels decrease below the P-6 value. This trip is also automatically bypassed by two out of four logic from the power range permissive (P-10).

This trip function can also be reinstated below P-10 by an administrative action requiring manual actuation of two control board mounted switches. Each switch will reinstate the trip function in one of the two protection logic trains. The source range trip is set between the P-6 setpoint and the maximum source range level. The channels can be individually blocked at the nuclear instrumentation racks to permit channel testing at any time under prescribed administrative procedures and only under the direction of authorized supervision. This blocking action is annunciated on the control board.

d. Power range high positive neutron flux rate trip

This circuit trips the reactor when an abnormal rate of increase in nuclear power occurs in two out of four power range channels. This trip provides protection against rod ejection accidents of low worth from mid-power and is always active.

e. Power range high negative neutron flux rate trip

This circuit trips the reactor when an abnormal rate of decrease in nuclear power occurs in two out of four power range channels. This trip provides protection against dropped rods and is always active.

Figure 7.2.1-1, Sheets 3, 4 and 5 show the logic for all of the nuclear overpower and rate trips. A detailed functional description of the equipment associated with this function is given in Reference 2.

2. Core Thermal Overpower Trips

The specific trip functions generated are as follows:

a. Overtemperature ΔT trip

This trip protects the core against low DNBR and trips the reactor on coincidence logic as listed in Table 7.2.1-1 with one set of temperature measurements per loop. The setpoint for this trip is continuously calculated by process circuitry for each loop by solving the following equation:

Overtemperature ΔT

$$\Delta T \frac{[1+\tau_4 s]}{[1+\tau_5 s]} \leq \Delta T_0 [K_1 - K_2 \frac{(1+\tau_1 s)}{(1+\tau_2 s)}(T - T') + K_3(P - P') - f_1(\Delta I)]$$

Where:

ΔT = Difference between hot leg and cold leg

T = Average temperature, °F

T'= nominal T_{avg} at rated thermal power

$\Delta T°$ = indicated ΔT at Rated Thermal Power

$K_1 \leq 1.15$

$K_2 \geq 0.011$

$\frac{1+\tau_1 s}{1+\tau_2 s}$ = The function generated by the lead-lag controller for T_{avg} dynamic compensation

τ_1 & τ_2 = Time constants utilized in the lead-lag controller for T_{avg}, $\tau_1 \geq 33$ secs., $\tau_2 \leq 4$ secs.

$\frac{1+\tau_4 s}{1+\tau_5 s}$ = The function generated by the lead-lag controller for measured ΔT

τ_4 & τ_5 = Time constants utilized in the lead-lag controller for measured ΔT, $\tau_4 \geq 5$ secs., $\tau_5 \leq 3$ secs.

K_3 = 0.00055

P = Pressurizer pressure, lb/in^{2}g

P' = 2235 lb/in^{2}g (Nominal RCS operating pressure)

S = Laplace transform operator (sec $^{-1}$)

f_1 (ΔI) is a function of the indicated difference between top and bottom detectors of the power-range nuclear ion chambers; with gains to be selected based on measured instrument response during plant startup tests such that (reference Figure 7.2.1-2):

(i) For $q_t - q_b$ between QTNL* and QTPL* $f_1(\Delta I) = 0$ (where q_t and q_b are percent RATED THERMAL POWER in the top and bottom halves of the core respectively, and $q_t + q_b$ is total THERMAL POWER in percent of RATED THERMAL POWER).

(ii) For each percent that the magnitude of (q_t - q_b) exceeds -29 percent, the ΔT trip setpoint shall be automatically reduced by QTNS* of its value at RATED THERMAL POWER.

(iii) For each percent that the magnitude of (q_t -q_b) exceeds +5 percent, the ΔT trip setpoint shall be automatically reduced by QTPS* of its value at RATED THERMAL POWER.

* These values can be found in the Technical Specification/COLR for the applicable fuel cycle.

The one pressurizer pressure parameter required per loop is obtained from separate sensors which are connected to three pressure taps at the top of the pressurizer. The four pressurizer pressure signals are obtained from the three taps by connecting one of the taps to two pressure transmitters. Refer to Subparagraph 7.2.2.3.3 for an analysis of this arrangement.

Figure 7.2.1-1, Sheet 5, shows the logic for the overtemperature ΔT trip function. A detailed functional description of the process equipment associated with this function is contained in Reference 1.

b. Overpower ΔT trip

This trip protects against excessive power (fuel rod rating protection) and trips the reactor on coincidence as listed in Table 7.2.1-1, with one set of temperature measurements per loop. The setpoint for each channel is continuously calculated using the following equation:

Overpower ΔT

$$\Delta T \frac{[1+\tau_4 s]}{[1+\tau_5 s]} \leq \Delta T_0[K_4 - K_5 \frac{(\tau_3 s)}{(1+\tau_3 s)}(T) - K_6(T - T'') - f_2(\Delta I)]$$

Where:

ΔT° = Indicated ΔT at RATED THERMAL POWER

$K_4 \leq 1.087$

$K_5 \geq 0.02/°F$ for increasing average temperature and 0 for decreasing average temperature

$\frac{\tau_3 s}{1 + \tau_3 s}$ = The function generated by the rate-lag controller for T_{avg} dynamic compensation

τ_3 = Time constant utilized in the rate-lag controller for T_{avg}, $\tau_3 \geq 10$ secs.,

$K_6 \geq 0.0011$ for $T > T''$ and $K_6 \geq 0$ for $T \leq T''$

T" = Indicated T_{avg} at rated thermal power

S = Laplace transform operator (sec^{-1})

$f_2(\Delta I)$ is a function of the indicated difference between top and bottom detectors of the power-range nuclear ion chambers; with gains to be selected based on measured instrument response during plant startup tests such that:

(i) for $q_t - q_b$ between QPNL* and QPPL* $f_2(\Delta I) = 0$ (where q_t and q_b are percent RATED THERMAL POWER in the top and bottom halves of the core, respectively, and $q_t + q_b$ is total THERMAL POWER in percent of RATED THERMAL POWER).

(ii) for each percent that the magnitude of $(q_t - q_b)$ exceeds QPNL* the ΔT trip setpoint shall be automatically reduced by QPNS* of its value at RATED THERMAL POWER.

(iii) for each percent that the magnitude of $(q_t - q_b)$ exceeds QPPL* the ΔT trip setpoint shall be automatically reduced by QPPS* of its value at RATED THERMAL POWER.

* These values can be found in the Technical Specification/COLR for the applicable fuel cycle.

T = As defined for overtemperature ΔT trip

$\frac{1 + \tau_4 s}{1 + \tau_5 s}$ = The function generated by the lead-leg controller for measured ΔT.

The source of temperature and flux information is identical to that of the overtemperature ΔT trip and the resultant ΔT setpoint is compared to the same ΔT. Figure 7.2.1-1 Sheet 5 shows the logic for this trip function. The detailed functional description of the process equipment associated with this function is contained in Reference 17.

3. Reactor Coolant System Pressurizer Pressure and Level Trips

The specific trip functions generated are as follows:

a. Pressurizer low pressure trip

The purpose of this trip is to protect against low pressure which could lead to DNB and limit the necessary range of protection afforded by the overtemperature ΔT trip. The parameter being sensed is reactor coolant pressure as measured in the pressurizer. Above P-7 the reactor is tripped when the compensated pressurizer pressure measurements fall below preset limits. This trip is blocked below P-7 to permit startup. The trip logic and interlocks are given in Table 7.2.1-1.

The trip logic is shown on Figure 7.2.1-1, Sheet 6.

b. Pressurizer high pressure trip

The purpose of this trip is to protect the Reactor Coolant System against system overpressure.

The same sensors and transmitters used for the pressurizer low pressure trip are used for the high pressure trip except that separate bistables are used for trip. These comparators trip when uncompensated pressurizer pressure signals exceed preset limits on coincidence as listed in Table 7.2.1-1. There are no interlocks or permissives associated with this trip function.

The logic for this trip is shown on Figure 7.2.1-1, Sheet 6.

c. Pressurizer High Water Level Trip

This trip is provided as a backup to the high pressurizer pressure trip and serves to prevent water relief through the pressurizer safety valves. This trip is blocked below P-7 to permit startup. The coincidence logic and interlocks of pressurizer high water level signals are given in Table 7.2.1-1.

The trip logic for this function is shown on Figure 7.2.1-1, Sheet 6.

4. Reactor Coolant System Low Flow Trips

These trips protect the core from DNB in the event of a loss of coolant flow situation. The means of sensing the loss of coolant flow are as follows:

a. Low reactor coolant flow

The parameter sensed is reactor coolant flow. Three elbow taps in each coolant loop are used as a flow device that indicates the status of reactor coolant flow. The basic function of this device is to provide information as to whether or not a reduction in flow rate has occurred. An output signal from two out of the three comparators in a loop would indicate a low flow in that loop. This trip is blocked below P-7 to permit startup.

The coincidence logic and interlocks are given in Table 7.2.1-1.

Figure 7.2.1-1, Sheet 5, shows the logic for the Reactor Coolant System low flow trips.

At power levels above P-7 and below P-8, low flow in two or more loops causes a reactor trip. Above P-8, low flow in one loop causes a reactor trip.

b. Reactor coolant pump undervoltage trip

This trip is required in order to protect against low flow which can result from loss of voltage to more than one reactor coolant pump (e.g. from plant blackout). There is one undervoltage sensing relay connected to the load side of each reactor coolant pump breaker. These relays provide an output signal when the pump voltage goes below approximately 70 percent of rated voltage. Signals from these relays are time delayed to prevent spurious trips caused by short term voltage perturbations. The coincidence logic and interlocks are given in Table 7.2.1-1. This trip is blocked below P-7 to permit startup.

c. Reactor coolant pump underfrequency trip

This trip is required to protect against low flow resulting from bus underfrequency; for example, a major power grid frequency disturbance. The function of this trip is to open the reactor coolant pump (RCP) breakers and trip the reactor for an underfrequency condition.

There is one underfrequency sensing relay connected to the load side of each reactor coolant pump breaker. Power level above the P-7 setpoint and an underfrequency condition sensed by more than one reactor coolant pump motor results in the tripping of all of the reactor coolant pump breakers as well as directly tripping the reactor. Signals from these relays are time delayed to prevent spurious trips caused by short-term frequency perturbations. Undervoltage sensing relays are provided across the power feed to each underfrequency sensor in order to ensure that each underfrequency input to the Reactor Protection System will indicate an underfrequency condition exists on loss of power to the sensing device. The contacts of this undervoltage relay are in series with the output of the underfrequency sensing relays in each channel. Figure 7.2.1-1, Sheet 5 shows the logic.

As shown in Figure 7.2.1-1, Sheet 5, the only inputs to the Reactor Protection System (RPS), associated with the RCP come from the undervoltage and underfrequency sensors. These sensors are located on the load side of the RCP breakers, within a Seismic Category I structure, and are designed in accordance with the requirements of IEEE 279-1971.

The trip signal for the reactor trip breakers, associated with the underfrequency condition, is an output from the RPS, as shown in Figure 7.2.1-1, Sheet 5.

The Westinghouse analysis of the loss of flow accident has shown that for frequency decay rates less than 6.8 Hz per sec. no RCP trip is necessary. TVA has performed an analysis to confirm that the worst case frequency decay rate at the RCP input terminals is below this limit. The results of the TVA analysis shows a frequency decay rate of less than 5 Hz/sec.

5. Low-Low Steam Generator Water Level Trip (Including Environmental Allowance Modifier and Trip Time Delay)

This trip protects the reactor from loss of heat sink in the event of a loss of feedwater to one or more steam generators or a major feedwater line rupture. This trip is actuated on two out of three low-low water level signals occurring in any steam generator. If a low-low water level condition is detected in one steam generator, signals shall be generated to trip the reactor and start the motor driven auxiliary feedwater pumps. If a low-low water level condition is detected in two or more steam generators, a signal is generated to start the turbine driven auxiliary feedwater pump as well.

This trip includes an Environmental Allowance Modifier (EAM) which distinguishes between normal and adverse containment environmental conditions. The EAM selects a low setpoint for the steam generator low-low level trip which includes an environmental uncertainty associated with normal plant conditions. In the event that an adverse containment condition is sensed by the EAM, a higher steam generator low-low level trip setpoint is automatically selected to account for larger environmental uncertainties associated with the harsh environmental conditions due to a feedwater rupture inside containment. By utilizing the two different setpoints, more operational flexibility is provided during normal conditions, while adequate protection is still provided during accident/adverse conditions.

In addition, the signals to actuate reactor trip and start auxiliary feedwater pumps are delayed through the use of a Trip Time Delay (TTD) system for reactor power levels below 50% of RTP. Low-low water level in any protection set in any steam generator will generate a signal which starts an elapsed time trip delay timer. The allowable trip time delay is based upon the prevailing power level at the time the low-low level trip setpoint is reached and the

number of steam generators that are affected. If power level rises after the trip time delay setpoints have been determined, the trip time delay is re-determined (i.e., decreased) according to the increase in power level. However, the trip time delay setpoints are not to be changed if the power level decreases after the setpoints have been determined. The use of this delay allows added time for natural steam generator level stabilization or operator intervention to avoid an undesirable inadvertent protection system actuation.

The logic is shown on Figure 7.2.1-1, Sheets 17, 18 and 19.

6. Turbine Trip-Reactor Trip

The turbine trip-reactor trip is actuated by two out of three logic from emergency trip header pressure signals or by all closed signals from the turbine steam stop valves. A turbine trip causes a direct reactor trip above P-9 setpoint.

The reactor trip on turbine trip is an anticipatory trip input signal to the reactor protection system. This trip is anticipatory in that it is not assumed to occur in any of the Chapter 15 accident analysis. This trip meets all of the requirements of IEEE 279-1971 including separation, redundancy, single failure, and testability. Seismic location, qualification, or mounting of the sensors is not practical because of their location in the nonseismic Turbine Building.

High-high steam generator level signals in two out of three channels for any steam generator will actuate a turbine trip, trip the main feedwater pumps and close the main and bypass feedwater control valves and main feedwater isolation valves. The purpose is to protect the turbine and steam piping from excessive moisture carryover caused by high-high steam generator level. Other turbine trips are discussed in Chapter 10.

The logic for this trip is shown on Figure 7.2.1-1, Sheet 7.

The analog portion of the trip shown on Figure 7.2.1-1, Sheet 16, is represented by dashed (- - -) lines. When the turbine is tripped, turbine emergency trip header pressure drops, and the pressure is sensed by three pressure sensors. A digital output is provided from each sensor when the oil pressure drops below a preset value. These three outputs are transmitted to two redundant two out of three logic matrixes, either of which trips the reactor if above P-9 setpoint.

The emergency trip header pressure signal also dumps the emergency header closing all of the turbine steam stop valves. When all stop valves are closed a reactor trip signal will be initiated if the reactor is above P-9 setpoint. This trip signal is generated by redundant (two each) limit switches on the stop valves.

7. Safety Injection Signal Actuation Trip

A reactor trip occurs when the Safety Injection System is actuated. The means of actuating the Safety Injection System are described in Section 7.3. This trip protects the core against a loss of primary or secondary coolant.

Figure 7.2.1-1, Sheet 8, shows the logic for this trip.

8. Manual Trip

The manual trip consists of two switches with two outputs on each switch. One output is used to actuate the train A trip breaker, the other output actuates the train B trip breaker. Operating a manual trip switch removes the voltage from the undervoltage trip coil and energizes the reactor trip breaker shunt trip coil.

There are no interlocks which can block this trip. Figure 7.2.1-1, Sheet 3, shows the manual trip logic.

7.2.1.1.3 Reactor Trip System Interlocks

1. Power Escalation Permissives

The overpower protection provided by the out of core nuclear instrumentation consists of three discrete, but overlapping, levels. Continuation of startup operation or power increase requires a permissive signal from the higher range instrumentation channels before the lower range level trips can be manually blocked by the operator.

A one out of two intermediate range permissive signal (P-6) is required prior to source range level trip blocking and source range outputs disabled. Source range level trips are automatically reactivated and outputs restored when both intermediate range channels are below the permissive (P-6) level. There is a manual reset switch for administratively reactivating the source range level trip and outputs when between the permissive P-6 and P-10 level, if required.

Source range level trip block and outputs disabled are always maintained when above the permissive P-10 level.

The intermediate range level trip and power-range (low setpoint) trip can only be blocked after satisfactory operation and permissive information are obtained from two of four power range channels. Individual blocking switches are provided so that the low-range power range trip and intermediate range trip can be independently blocked for each train. These trips are automatically reactivated when any three of the four power range channels are below the permissive (P-10) level, thus ensuring automatic activation to more restrictive trip protection.

The development of permissives P-6 and P-10 is shown on Figure 7.2.1-1, Sheet 4. All of the permissives are digital; they are derived from bistable signals from the four power range and the two intermediate range channels.

See Table 7.2.1-2 for the list of protection system interlocks.

2. Blocks of Reactor Trips at Low Power

Interlock P-7 blocks a reactor trip below approximately 10 percent of full power on a low reactor coolant flow in more than one loop, reactor coolant pump undervoltage and under frequency, pressurizer low pressure or high water level. See Figure 7.2.1-1, Sheets 5 and 6.

Interlock P-8 blocks a reactor trip on 2/3 low reactor coolant flow in any one loop. When the plant is below approximately 35 percent of full power, the block action (absence of the

P-8 interlock signal) occurs when three out of four neutron flux power range signals are below the setpoint. Thus, below the P-8 setpoint, the reactor will be allowed to operate with one loop indicating low flow and trip will not occur until two loops are indicating low flow. See Figure 7.2.1-1, Sheet 4, for derivation of P-8, and Sheet 5 for applicable logic.

Interlock P-9 blocks a reactor trip following a turbine trip below 50 percent power. The block action (absence of the P-9 interlock signal) occurs when three out of four neutron flux power range signals are below the setpoint. Thus, below the P-9 setpoint, the reactor will not be directly tripped by a turbine trip, but instead the reactor control system and the steam dump system will automatically control the reactor to zero power conditions. See Figure 7.2.1-1 Sheet 16 for the implementation of the P-9 interlock. See Figure 7.2.1-1 Sheet 4 for the derivation of P-9.

See Table 7.2.1-2 for the list of protection system blocks.

7.2.1.1.4 Coolant Temperature Sensor Arrangement and Calculational Methodology

The individual narrow range cold and hot leg temperature signals required for input to the reactor trip circuits and interlocks are obtained using RTD's installed in each reactor coolant loop.

The cold leg temperature measurement on each loop is accomplished with two RTDs mounted in thermowells. The cold leg sensors are inherently redundant in that either sensor can adequately represent the cold leg temperature measurement.

The hot leg temperature measurement on each loop is accomplished with three RTDs mounted in thermowells spaced 120 degrees apart around the circumference of the reactor coolant pipe for spatial variations.

These cold and hot leg RTD signals are input to the protection system digital electronics and processed as follows:

The two cold leg temperature signals are subjected to range and consistency checks and then averaged to provide a group value for T cold.

If either T cold input signal is out of range high or low, it will be set to the high or low limit, respectively.

Next, a consistency check is performed on the T cold input signals. If these signal agree within an acceptance interval (DELTAC), the group quality is set to GOOD. If the signals do not agree within the acceptance tolerance DELTAC, the group quality is set to BAD, and the individual signal qualities are set to POOR. The average of the two signals is used to represent the group in either case.

DELTAC is a fixed input parameter based on operating experience. One DELTAC value is required for each protection set.

Each of the three hot leg temperature signals is subjected to a range check, and utilized to calculate an estimated average hot leg temperature which is then consistency checked against the other two estimates for average hot leg temperature.

If any T hot input signal is out of range high or low, it will be set to the offscale high or low limit respectively. Next, an estimated average hot leg temperature is derived from each T hot input signal as follows:

$\overline{T}_{hji} = T^f_{hji} - P_{\beta i} \overset{\circ}{S}_{ji}$

where

T^f_{hji} is the filtered T hot signal for the jth RTD (j = 1 to 3) in the ith loop (i = 1 to 4)

$\overset{\circ}{S}_{ji}$ = manually input bias which corrects the individual T hot RTD value to the loop average.

$P_{\beta i}$ = Power fraction being used to correct the bias value being used for any power level.

$P_{\beta i} = \left(T^f_{havei} - T^f_{ci}\right) / \Delta T^o_i$

where

ΔT^o_i is the full power ΔT in the ith loop

Then, an average of the three estimated hot leg temperatures is computed and the individual signals are checked to determine if they agree within ± DELTA of the average value. If all of the signals do agree within ± DELTA of the average value, the group quality is set to GOOD. The group value T^f_{havei} is set to the average of the three estimated average hot leg temperatures.

If the signal values do not all agree within ± DELTA of the average, the algorithm will delete the signal value which is furthest from the average. The quality of this signal will be set to POOR and a consistency check will then be performed on the remaining GOOD signals. If these signals pass the consistency check, the group value will be taken as the average of these GOOD signals and the group quality will be set to POOR. However, if these signals again fail the consistency check (within ± DELTA), then the group value will be set to the average of these two signals; but the group quality will be set to BAD. All of the individual signals will have their quality set to POOR.

DELTA is a fixed input parameter based upon temperature distribution tests within the hot leg. One DELTA value is required for each protection set.

Delta T and T average are calculated as follows:

$\Delta T = T^f_{have} - T^f_c$

$T_{avg} = \left(T^f_{have} + T^f_c\right) / 2.0$

The calculated values for Delta T and T Average are then utilized for both the remainder of the Overtemperature and Overpower Delta T protection channel and channel outputs for control purposes.

7.2.1.1.5 <u>Pressurizer Water Level Reference Leg Arrangement</u>

The design of the pressurizer water level instrumentation includes a slight modification of the usual tank level arrangement using differential pressure between an upper and a lower tap. The modification consists of the use of a sealed reference leg instead of the conventional open column of water. Refer to 7.2.2.3.4 for an analysis of this arrangement.

7.2.1.1.6 Process System

The process system is described in Reference 17.

7.2.1.1.7 Solid State Logic Protection System

The solid state logic protection system takes binary inputs (voltage/no voltage) from the process protection and nuclear instrument channels corresponding to conditions (normal/abnormal) of plant parameters. The system combines these signals in the required logic combination and generates a trip signal to the undervoltage and shunt trip coils of the reactor trip circuit breakers when the necessary combination of signals occur. The system also provides annunciator, status light and computer input signals which indicate the condition of bistable input signals, partial trip and full trip functions and the status of the various blocking, permissive (see Section 10.4.4.3 for exception on P-12) and actuation functions. In addition the system includes means for semi-automatic testing of the logic circuits. A detailed description of this system is given in Reference 3.

7.2.1.1.8 Isolation Devices

In certain applications, Westinghouse considers it advantageous to employ control signals derived from individual protection channels through isolation devices contained in the protection channel, as permitted by IEEE-279.

In all of these cases, analog signals derived from protection channels for non-protective functions are obtained through isolation devices located in the process protection racks. By definition, non-protective functions include those signals used for control, remote process indication, and computer monitoring.

Isolation device qualification tests are described in References 4, 5, and 17.

7.2.1.1.9 Energy Supply and Environmental Variations

The energy supply for the Reactor Trip System, including the voltage and frequency variations, is described in Section 7.6. The environmental variations, throughout which the system will perform, are given in Section 3.11.

7.2.1.1.10 Trip Levels (Setpoints)

The levels that, when reached, will require trip action are given in the SNP Technical Specifications. (Refer also to Subparagraph 7.1.2.1.9)

7.2.1.1.11 Seismic Design

The seismic design considerations for the Reactor Trip System are given in Section 3.10. This design meets the requirements of Criterion 2 of the 1971 General Design Criteria (GDC).

7.2.1.2 Design Bases Information

The information given below presents the design bases information per Section 3 of IEEE 279-1971 Reference 8. Functional logic diagrams are presented in Figure 7.2.1-1.

7.2.1.2.1 Generating Station Conditions

The following are the generating station conditions requiring reactor trip.

1. DNBR approaching limit value.

2. Power density (kilowatts per foot) approaching rated value for Condition II faults (See Chapter 4 for fuel design limits).

3. Reactor Coolant System overpressure creating stresses approaching the limits specified in Chapter 5.

7.2.1.2.2 Generating Station Variables

The following are the variables required to be monitored in order to provide reactor trips. (See Table 7.2.1-1)

1. Neutron flux

2. Reactor Coolant temperature

3. Reactor Coolant System pressure (pressurizer pressure)

4. Pressurizer water level

5. Reactor Coolant flow

6. Reactor Coolant pump operational status (voltage and frequency, and breaker position)

7. Steam generator water level

8. Turbine-generator operational status (emergency trip header pressure and stop valve position)

7.2.1.2.3 Spatially Dependent Variables

The following variable is spatially dependent:

1. Reactor coolant narrow range hot leg temperature: See Paragraph 7.3.1.2 for a discussion of this variable spatial dependence.

7.2.1.2.4 Limits, Margins and Levels

The parameter values that will require reactor trip are given in the SNP Technical Specifications, and in Chapter 15, Safety Analysis. Chapter 15 demonstrates that the setpoints used in the SNP Technical Specifications are conservative. (Refer also to Subparagraph 7.1.2.1.9)

The setpoints for the various functions in the Reactor Trip System have been analytically determined such that the operational limits so prescribed will prevent fuel rod clad damage and loss of integrity of the Reactor Coolant System as a result of any Condition II incident (anticipated malfunction). As such, the Reactor Trip System limits the following parameters:

1. Minimum DNBR
2. Maximum System Pressure
3. Fuel rod maximum linear power

The accident analyses described in Section 15.2 demonstrate that the functional requirements as specified for the Reactor Trip System are adequate to meet the above considerations, even assuming, for conservatism, adverse combinations of instrument errors (Refer to Table 15.1.3-1). Safety limits associated with the reactor core and Reactor Coolant System, plus the Limiting Safety System Setpoints, are presented in the SNP Technical Specifications.

The Technical Specifications incorporate both nominal and limiting setpoints. Nominal settings of the setpoints are more conservative than the limiting settings. This allows for calibration uncertainty and instrument channel drift without violating the limiting setpoint. Automatic initiation of protective functions occurs at the nominal setpoints (plus or minus the allowed tolerances). The methodology used to derive the setpoints is documented in references 16 and 20.

7.2.1.2.5 Abnormal Events

The malfunctions, accidents or other unusual events which could physically damage Reactor Trip System components or could cause environmental changes are as follows:

1. Earthquake (discussed in Chapter 2 and Chapter 3).
2. Fire (See Section 9.5).
3. Explosion (Hydrogen buildup inside containment). (See Section 6.2).
4. Missiles (See Sections 3.5 and 10.2.3).
5. Flood (See Chapter 2 and 3).
6. Wind and Tornadoes (See Section 3.3).

All instrumentation, control and communication lines that will be required for operation in the flood mode are either above the design basis flood (DBF) or within a nonflooded structure or are designed for submerged operation.

7.2.1.2.6 Minimum Performance Requirements

The performance requirements are as follows:

1. System response times:

   The reactor trip system response time shall be the time interval from when the monitored parameter exceeds its trip setpoint at the channel sensor until loss of stationary gripper coil voltage.

The reactor trip system instrumentation response time values are provided in Table 7.2.1-5.

2. Reactor Trip accuracies are given in Table 7.2.1-4.

3. Protection system ranges:

		Range
a.	Power range nuclear power	1 to 120% full power
b.	Neutron flux rates (positive and negative)	+5% to -5% of full power for rapid changes in power.
c.	Overtemperature ΔT:	
	T_{hot} leg	530 to 650°F
	T_{cold} leg	510 to 630°F
	T_{avg}	530 to 630°F
	Pressurizer pressure	1700 to 2500 psig
	$F(\Delta>)$	-60 to +60%
	ΔT setpoint	0 to 150% power

d.	Overpower ΔT	(See Overtemperature ΔT)
e.	Pressurizer Pressure	1700 to 2500 psig
f.	Pressurizer water level	Entire distance between level taps
g.	Reactor coolant flow	0 to 120% of rated flow
h.	Reactor coolant pump bus underfrequency	50 to 65 Hz
i.	Reactor coolant pump bus undervoltage	0 to 100% rated voltage
j.	Steam generator water level	± ~ 6 ft. from nominal full load

7.2.2 Analyses

7.2.2.1 Failure Mode and Effects Analyses

A failure mode and effects analysis of the Reactor Trip System has been performed. Results of this study and a fault tree analysis are presented in WCAP-7706, "An Evaluation of Solid State Logic Reactor Protection In Anticipated Transients," (Reference 6).

7.2.2.2 Evaluation of Design Limits

While most setpoints used in the Reactor Protection System are fixed, there are variable setpoints, most notably the overtemperature ΔT and overpower ΔT setpoints. All setpoints in the Reactor Trip System have been selected on the basis of detailed safety analyses and engineering design studies. The capability of the Reactor Trip System to prevent loss of integrity of the fuel clad and/or Reactor Coolant System pressure boundary during Condition II and III transients is demonstrated in the Safety Analysis, Chapter 15. These safety analyses are carried out using those setpoints determined from results of the engineering design studies. Setpoint limits are presented in the Technical Specifications. A discussion of the intent for each of the various reactor trips and the accident analysis (where appropriate) which utilizes this trip is presented in Subparagraph 7.2.1.1.2. It should be noted that the selected trip setpoints all provide for margin before protection action is actually required to allow for uncertainties and instrument errors (Reference 16). The design meets the requirements of Criteria 16 and 22 of the 1971 GDC.

7.2.2.2.1 Trip Setpoint Discussion

It has been noted in Subparagraph 7.2.1.2.4 that below the minimum allowable DNBR there is likely to be significant local fuel clad failure. The DNBR existing at any point in the core for a given core design can be determined as a function of the core inlet temperature, power output, operating pressure and flow. Consequently, core safety limits in terms of a DNBR equal to the minimum value for the hot channel can be developed as a function of core ΔT, T_{avg} and pressure for a specified flow as illustrated by the solid lines in Figure 7.2.2-1. Also shown as solid lines in Figure 7.2.2-1 are the loci of conditions equivalent to 116.5 percent of power as a function of ΔT and T_{avg} representing the overpower (kW/ft) limit on the fuel. The dashed lines indicate the

maximum permissible setpoint (ΔT) as a function of T_{avg} and pressure for the overtemperature and overpower reactor trip. Actual setpoint constants in the equation representing the dashed lines are as given in the SNP Technical Specifications. These values are conservative to allow for instrument errors. The design meets the requirements of Criteria 16, 20, 22 and 27 of the 1971 GDC.

DNBR is not a directly measurable quantity; however, the process variables that determine DNBR are sensed and evaluated. Small isolated changes in various process variables may not individually result in violation of a core safety limit, whereas the combined variations, over sufficient time, may cause the overpower or overtemperature safety limit to be exceeded. The design concept of the reactor trip system takes cognizance of this situation by providing reactor trips associated with individual process variables in addition to the overpower/overtemperature safety limit trips. The process variable trips prevent reactor operation whenever a change in the monitored value is such that a core or system safety limit is in danger of being exceeded should operation continue. Basically, the high pressure, low pressure and overpower/overtemperature ΔT trips provide sufficient protection for slow transients as opposed to such trips as low flow or high flux which will trip the reactor for rapid changes in flow or flux, respectively, that would result in fuel damage before actuation of the slower responding ΔT trips could be effected.

Therefore, the Reactor Trip System has been designed to provide protection for fuel clad and RCS pressure boundary integrity where: (a) A rapid change in a single variable of factor which will quickly result in exceeding a core or a system safety limit, and (b) A slow change in one or more variables will have an integrated effect which will cause safety limits to be exceeded. Overall, the Reactor Trip System offers diverse and comprehensive protection against fuel clad failure and/or loss of Reactor Coolant System integrity for Condition II and III accidents. This is demonstrated by Table 7.2.1-3 which lists the various trips of the Reactor Trip System, the corresponding Technical Specification on Safety Limits and Safety System Settings and the appropriate accident discussed in the Safety Analyses in which the trip could be utilized.

The nuclear power plant Reactor Trip System design employed by Westinghouse was evaluated in detail with respect to common mode failure and is presented in References 6 and 7. The design meets the requirements of Criterion 21 of the 1971 GDC.

Preoperational testing is performed on Reactor Trip System components and systems to determine equipment readiness for startup. This testing serves as a very real evaluation of the system design.

Analyses of the results of Condition I, II, III and IV Events, including considerations of instrumentation installed to mitigate their consequences, are presented in Chapter 15. The instrumentation installed to mitigate the consequences of load rejection and turbine trip is given in Section 7.7.

7.2.2.2.2 Reactor Coolant Flow Measurement

The elbow taps used on each loop in the primary coolant system are instrument devices that indicate the status of the reactor coolant flow. The basic function of this device is to provide information as to whether or not a reduction in flow has occurred. The correlation between flow and elbow tap signal is given by the following equation:

$$\frac{\Delta P}{\Delta P_0} = \left(\frac{w}{w_0}\right)^2$$

Where ΔP_o is the pressure differential at the reference flow, w_o, and ΔP is the pressure differential at the corresponding flow, w. The full flow reference point is established during initial plant startup. The low flow trip point is then established by extrapolating along the correlation curve. The expected absolute accuracy of the channel is within $\pm$ 10 percent of full flow and field results have shown the repeatability of the trip point to be within $\pm$ 1 percent.

7.2.2.2.3 Evaluation of Compliance to Applicable Codes and Standards

The Reactor Trip System meets the requirements of IEEE-Standard 279, Reference 8, as indicated below.

1. Single Failure Criterion

   The protection system is designed to provide redundant (one out of two, two out of three or two out of four) instrumentation channels for each protective function and one out of two logic train circuits. These redundant channels and trains are electrically isolated and physically separated. Thus, any single failure within a channel or train will not prevent protective action when required. This meets the requirements of Criterion 22 of the GDC. Loss of input power, the most likely mode of failure, to a channel or logic train will result in a signal calling for a trip. This meets the requirements of Criterion 23 of the 1971 GDC.

   To prevent the occurrence of common mode failures, such additional measures as functional diversity, physical separation, and testing as well as administrative control during design, production, installation and operation are employed, as discussed in References 6 and 7. This meets the requirements of Criterion 21 of the 1971 GDC.

2. Quality of Components and Modules

   For a discussion of the quality of the components and modules used in the Reactor Trip System, refer to Chapter 17. The quality used meets the requirements of Criterion 1 of the 1971 GDC.

3. Equipment Qualification

   For a discussion of the type of tests made to verify the performance requirements, refer to Section 3.11. The test results demonstrate that the design meets the requirements of Criterion 22 of the 1971 GDC.

4. Independence

   Each individual channel is assigned to one of four channel designations, e.g., Channel I, II, III, IV. See Figure 7.2.2-2. Channel independence is carried throughout the system, extending from the sensor through to the devices actuating the protective function. Physical separation is used to achieve separation of redundant transmitters. Separation of wiring is achieved using separate wireways, cable trays, conduit runs and containment penetrations for each redundant channel. Redundant process equipment is separated by locating electronics in different protection rack sets. Each redundant channel is energized from a separate AC power feed. This meets the requirements of Criterion 22 of the 1971 GDC.

5. Control and Protection System Interaction

   The protection system is designed to be independent of the control system. In certain applications the control signals and other non-protective functions are derived from individual

protective channels through isolation devices. The isolation devices are classified as part of the protection system and are located in the process protective racks. Non-protective functions include those signals used for control, remote non-IE process indication, and computer monitoring. The isolation devices are designed such that a short circuit, open circuit, or the application of the maximum credible fault voltage on the isolated output portion of the circuit (i.e., the non-protective side of the circuit) will not affect the input (protective) side of the circuit.

The signals obtained through the isolation devices are never returned to the protective racks. This meets the requirements of Criterion 24 of the 1971 GDC.

A detailed discussion of the design and testing of the isolation devices is given in References 4 and 5. These reports include the results of applying various malfunction conditions on the output portion of the isolation devices. The results show that no significant disturbance to the isolation device input signal occurred.

Where failure of a protection system component can cause a process excursion, which requires protective action, the protection system can withstand another independent failure without loss of protective action. This is normally achieved by means of two-out-of-four (2/4) trip logic for each of the protective functions except the Steam Generator Level and Pressure and the Pressurizer Level and Pressure Protections. The Steam Generator and Pressurizer Low Water Level as well as the Steam Generator Pressure and Pressurizer Pressure (Low Pressure Safety Injection Initiations) protective functions rely upon two-out-of-three (2/3) trip logic and a control system Median Signal Selector (MSS). The use of a control system MSS prevents any protection system failure from causing a control system reaction resulting in a need for subsequent protective action. This meets the requirements of Criterion 25 of the 1971 GDC.

6. Capability for Testing

The Reactor Trip System is capable of being tested during power operation. Where only parts of the system are tested at any one time, the testing sequence provides the necessary overlap between the parts to assure complete system operation.

The protection system is designed to permit periodic testing of the process channel portion of the Reactor Trip System during reactor power operation without initiating a protective action unless a trip condition actually exists. This is because of the "AND" logic required for reactor trip. Note that the source and intermediate range high neutron flux trips must be bypassed during testing.

The operability of the process sensors is ascertained by comparison with redundant channels monitoring the same process variables or those with a fixed known relationship to the parameter being checked. The sensors can be calibrated during plant shutdown.

The Process Protection System performs automatic surveillance testing of the digital process protection racks via a portable Man Machine Interface (MMI) test cart. The MMI test cart is connected to a process rack by inserting a connector into the process rack test panel. Using the MMI, the "Surveillance Test" option is then selected. Following instructions entered through the MMI, the rack test processor automatically performs the following operations:

1. Selection of the individual process channel to be tested.

2. Calibration of the test reference signals and verification of the tester time base.

3. Placement of the Individual channel trip outputs in either "Channel Trip" or "Bypass" (password protected) mode.

   A. Bypass Mode -- disables the individual channel comparator trip circuitry which forces the associated logic input relays to remain in the non-tripped state until the "bypass" is removed.

   B. Channel Trip Mode – Usually interrupts the individual channel comparator outputs to the logic circuitry to de-energize the associated logic input relay(s) (some channel trip functions are energize to trip).

4. Activation of the test injection signal.

5. Performance of Analog to Digital (A/D) converter test, and engineering unit values conversion tests.

6. Performance of comparator functional tests.

7. Performance of channel time response test.

8. Completion of test cycle and automatically remove "Channel Trips" or “Bypass” signals.

9. Verify calibration of the test injection signals.

10. Display of test results on the MMI screen.

Interruption of the comparator output to the logic circuitry for any reason (test, maintenance purposes, or removed from service) causes that portion of the logic to be actuated and accompanied by a channel trip alarm and channel status light in the control room. Status lights on the process rack test panel indicate when the associated comparators have tripped. Each channel is fully testable via the portable MMI test cart.

The power range channels of the Nuclear Instrumentation System are tested by superimposing a test signal on the actual detector signal being received by the channel at the time of testing. The output of the bistables is not placed in a tripped condition prior to testing. Also, since the power range channel logic is two out of four, bypass of this reactor trip function is not required.

To test a power range channel, a "TEST-OPERATE" switch is provided to require deliberate operator action and operation of which will initiate the "CHANNEL TEST" annunciator in the control room. Bistable operation is tested by increasing the test signal level up to its trip setpoint and verifying bistable relay operation by control board annunciator and trip status lights.

It should be noted that a valid trip signal would cause the channel under test to trip at a lower actual reactor power level. A reactor trip would occur when a second bistable trips. No provision has been made in the channel test circuit for reducing the channel signal level below that signal being received from the Nuclear Instrumentation System detector.

A Nuclear Instrumentation System channel which can cause a reactor trip through one of two protection logic (source or intermediate range) is provided with a bypass function which prevents the initiation of a reactor trip from that particular channel during the short period that it is undergoing test. These bypasses initiate an alarm in the control room.

For a detailed description of the Nuclear Instrumentation System see Reference 2.

The logic trains of the Reactor Trip System are designed to be capable of complete testing at power, except for those trips listed in Subsection 7.1.2.8. Annunciation is provided in the control room to indicate when a train is in test, when a reactor trip is bypassed and when a reactor trip breaker is bypassed. Details of the logic system testing are given in Reference 3.

The reactor coolant pump breakers cannot be tripped at power without causing a plant upset by loss of power to a coolant pump. However, the reactor coolant pump breaker open trip logic and continuity through the shunt trip coil can be tested at power. Manual trip cannot be tested at power without causing a reactor trip since operation of either manual trip switch actuates both Train A and Train B. Note, however, that manual trip could also be initiated from outside the control room by manually tripping one of the reactor trip breakers. Initiating safety injection or opening the turbine trip breakers cannot be done at power without upsetting normal plant operation. However, the logic for these trips is testable at power.

Testing of the logic trains of the Reactor Trip System includes a check of the SSPS input relays and a logic matrix check. The following sequence is used to test the system:

a. Check of input relays

   During testing of the process instrumentation system and nuclear instrumentation system bistables, each channel bistable is placed in a trip mode causing one SSPS input relay in Train A and one in Train B to de-energize. A contact of each relay is connected to a universal logic printed circuit card. This card performs both the reactor trip and monitoring functions. The contact that creates the reactor trip also causes a status lamp and an annunciator on the control board to operate. Either the Train A or Train B input relay operation will light the status lamp and annunciator.

   Each train contains a multiplexing test switch, one of which (either train) normally remains in the A + B position. The A + B position alternately allows information to be transmitted from the two trains to the control board. During process or nuclear instrumentation testing, a steady status lamp and annunciator indicates that input relays in both trains have been de-energized. A flashing lamp means that the input relays in the two trains did not both de-energize. Contact inputs to the logic protection system such as reactor coolant pump bus under frequency relays operate input relays which are tested by operating the remote contacts as described above and using the same type of indications as those provided for bistable input relays.

Actuation of the SSPS input relays provides the overlap between the testing of the logic protection system and the testing of those systems supplying the inputs to the logic protection system. Test indications are status lamps and annunciators on the control board. Inputs to the logic protection system are checked one channel at a time, leaving the other channels in service. For example, a function that trips the reactor when two out of four channels trip becomes a one out of three trip when one channel is placed in the trip mode. Both trains of the logic protection system remain in service during this portion of the test.

b. Check of Logic Matrixes

Logic matrixes are checked one train at time. Input relays are not operated during this portion of the test. Reactor trips from the train being tested are inhibited with the use of the input error inhibit switch on the semi-automatic test panel in the train. Details of

semi-automatic tester operation are given in Reference 3. At the completion of the logic matrix tests, one comparator/bistable in each channel of process instrumentation or nuclear instrumentation is tripped to check closure of the input error inhibit switch contacts.

The logic test scheme uses pulse techniques to check the coincidence logic. All possible trip and non-trip combinations are checked. Pulses from the tester are applied to the inputs of the universal logic card at the same terminals that connect to the input relay contacts. Thus there is an overlap between the input relay check and the logic matrix check. Pulses are fed back from the reactor trip breaker undervoltage coil to the tester. The pulses are of such short duration that the reactor trip breaker undervoltage coil armature cannot respond mechanically.

Test indications that are provided are an annunciator in the control room indicating that reactor trips from the train have been blocked and that the train is being tested, and green and red lamps on the semi-automatic tester to indicate a good or bad logic matrix test. Protection capability provided during this portion of the test is from the train not being tested.

The general design features and details of the testability of the logic system are described in Reference 3, thus this testing capability meets the requirements of Criterion 21 of the 1971 GDC.

7. Testing of Reactor Trip Breakers

Normally, reactor trip breakers 52/RTA and 52/RTB are in service, and bypass breakers 52/BYA and 52/BYB are withdrawn (out of service). In testing the protection logic, pulse techniques are used to avoid tripping the reactor trip breakers thereby eliminating the need to bypass them during this testing. The following procedure describes the method used for testing the trip breakers:

a. With bypass breaker 52/BYA in the test position, manually close and trip it to verify its operation.

b. Rack in and close 52/BYA. Place test block hand switch (S1) in the test position (not blocked). Manually trip 52/RTA through a protection system logic matrix.

c. Reset 52/RTA.

d. Trip and rackout 52/BYA.

e. Repeat above steps to test trip breaker 52/RTB using bypass breaker 52/BYB.

Auxiliary contacts of the bypass breakers are connected into the alarm system of their respective trains, as described in Reference 3 such that if either train is placed in test while the bypass breaker of the other train is closed, both reactor trip breakers and both bypass breakers will automatically trip.

Auxiliary contacts of the bypass breakers are also connected in such a way that if an attempt is made to close the bypass breaker in one train while the bypass breaker of the other train is already closed, both bypass breakers will automatically trip.

The Train A and Train B alarm systems operate separate annunciators in the control room. The two bypass breakers also operate an annunciator in the control room. Bypassing of a protection train with either the bypass breaker or with the test switches will result in audible and visual indications.

The complete Reactor Trip System is normally required to be in service. However, to permit online testing of the various protection channels or to permit continued operation in the event of a subsystem instrumentation channel failure, Technical Specification, 3.3.1 defines the required number of operable channels and the minimum degree of channel redundancy has been formulated. This Technical Specification also defines the required restriction to operation in the event that the channel operability and degree to redundancy requirements cannot be met.

The Reactor Trip System is designed in such a way that response time tests can only be performed during shutdown. However, the safety analyses utilize conservative numbers for trip channel response time. The measured channel response times are compared with those used in the safety evaluations. On the basis of startup tests conducted on several plants, the actual response times measured are less than the times used in the safety analyses. Refer to Table 15.1.3-1.

8. Bypasses

The process protection system is designed to permit an inoperable channel to be placed in a bypasss condition for the purpose of trouble shooting or periodic test of a redundant channel.

Where operating requirements necessitate automatic or manual bypass of a protective function (see Section 10.4.4.3 for exception on P-12), the design is such that the bypass is removed automatically whenever permissive conditions are not met. Devices used to achieve automatic removal of the bypass of a protective function are considered part of the protective system and are designed in accordance with the criteria of this section. Indication is provided in the control room if some part of the system has been administratively bypassed or taken out of service.

9. Multiple Setpoints

For monitoring neutron flux and steam generator level, multiple setpoints are used. When a more restrictive trip setting becomes necessary to provide adequate protection for a particular mode of operation or set of operating conditions, the protective system circuits are designed to provide positive means or administrative control to assure that the more restrictive trip setpoint is used. The devices used to prevent improper use of less restrictive trip settings are considered part of the protective system and are designed in accordance with the criteria of this section.

10. Completion of Protective Action

The protection system is so designed that, once initiated, a protective action goes to completion. Return to normal operation requires action by the operator.

11. Manual Initiation

    Switches are provided on the Control Board for manual initiation of protective action. Failure in the automatic system does not prevent the manual actuation of the protective functions. Manual actuation relies on the operation of a minimum of equipment.

12. Access

    The design provides for administrative control of access to all set point adjustments, module calibration adjustments, test points, and the means for manually bypassing channels or protective functions. For details refer to Reference 17.

13. Information Read Out

    The protective system provides the operator with complete information pertinent to system status and safety. All transmitted signals (flow, pressure, temperature, etc.) which can cause a reactor trip is either indicated or recorded for every channel, including all neutron flux power range currents (top detector, bottom detector, algebraic difference and average of bottom and top detector currents). Any reactor trip will actuate an alarm and an annunciator. Such protective actions are indicated and identified down to the channel level.

    Alarms and annunciators are also used to alert the operator of deviations from normal operating conditions so that he may take appropriate corrective action to avoid a reactor trip. Actuation of any rod stop or trip of any reactor trip channel will actuate an alarm.

14. Identification

    The identification described in Section 7.1 provides immediate and unambiguous identification of the protection equipment.

7.2.2.3 Specific Control and Protection Interactions

7.2.2.3.1 Neutron Flux

Four power range neutron flux channels are provided for overpower protection. If any channel fails in such a way as to produce a low output, that channel is incapable of overpower protection but will not cause control rod movement because of the auctioneer. Two out of four overpower trip logic will ensure an overpower trip if needed even with an independent failure in another channel.

The high median signal of the four power range neutron flux channels is selected by DCS to automatically control the control rods. If any channel fails and produces a low output, DCS utilizes the median signal of the three remaining channels, thereby limiting rod movement due to a failed channel.

In addition, channel deviation signals in the control system will give an alarm if any power range neutron flux channel deviates significantly from any of the other channels. Also, the automatic rod control system (contained within the DCS) will respond only to rapid changes in indicated neutron flux; slow changes or drifts are compensated by the temperature control signals. Finally, an overpower signal from any intermediate or power range nuclear channel will block automatic rod withdrawal. The setpoint for this rod stop is below the reactor trip setpoint.

7.2.2.3.2 Coolant Temperature

The accuracy of the resistance temperature detector measurements is demonstrated during plant startup tests by comparing temperature measurement from all resistance temperature detectors with one another.

The comparisons are done with the Reactor Trip System in an isothermal condition. The linearity of the ΔT measurements obtained from the hot leg and cold leg resistance temperature

detectors as a function of plant power is also checked during plant startup tests. The absolute value of ΔT versus plant power is not important as far as reactor protection is concerned. Reactor Trip System setpoints are based upon percentages of the indicated ΔT at nominal full power rather than on absolute values of ΔT. For this reason, the linearity of the ΔT signals as a function of power is of importance rather than the absolute values of the ΔT. As part of the plant startup tests, the loop resistance temperature detector signals will be compared with the core exit thermocouple signals. Note also that reactor temperature control is based upon signals derived from protection system channels after isolation by isolation devices such that no feedback effect can perturb the protection channels. Since control is based on the highest average temperature of the loops, the control rods are always moved based upon the most pessimistic temperature measurement with respect to margins to DNBR. A spurious low average temperature measurement (at power) from any loop temperature control channel will cause no control action. A spurious high average temperature measurement will cause rod insertion (safe direction).

In addition, channel deviation signals in the control system will give an alarm if any temperature channel deviates significantly from the auctioneered (highest) value. Automatic rod withdrawal blocks will also occur if any two of the temperature channels indicate overtemperature or overpower condition.

7.2.2.3.3 Pressurizer Pressure

The pressurizer pressure protection channels signals are used for high and low pressure protection and as inputs to the overtemperature ΔT trip protection function. Isolated output signals from these channels are used for pressure control in the DCS. These signals are used to control pressurizer spray and heaters and power operated relief valves. A coincident high pressure signal from two independent DCS processing groups is needed for the actuation of each pressurizer PORV. Pressurizer pressure is sensed by fast response pressure transmitters with a time response of better than 0.2 seconds.

The four pressurizer pressure signals pass through a Median-Low Signal Selector in the DCS preventing a spurious signal from one channel causing a control system pressure perturbation.

Units 1 and 2

The pressurizer heaters are incapable of overpressurizing the Reactor Coolant System. The rate of pressure rise achievable with heaters is slow, and ample time and pressure alarms are available to alert the operator of the need for appropriate action.

Overpressure protection is based upon the positive surge of the reactor coolant produced as a result of turbine trip under full load, assuming the core continues to produce full power.

The self-actuated safety valves are sized on the basis of steam flow from the pressurizer to accommodate this surge at a setpoint of 2500 psia and an accumulation of 3 percent. Note that no credit is taken for the relief capability provided by the power operated relief valves during this surge. In addition, operation of any one of the power operated relief valves can maintain pressure below the high pressure trip point for most transients.

The four pressurizer pressure signals are obtained from the three taps by connecting one of the taps to two pressure transmitters. Redundancy is not impaired by having a shared tap since the logic for this trip is two out of four. If the shared tap is plugged, the affected channels will remain static. If the impulse line bursts, the indicated pressure will drop to zero. In either case the fault is easily detectable, and the protective function remains operable.

7.2.2.3.4 Pressurizer Water Level

Three pressurizer water level channels are used for reactor trip. Isolated signals from these channels are used for pressurizer water level control (control contained within the plant Distributed Control System). A failure in the level control system could fill or empty the pressurizer at a slow rate (on the order of half an hour or more).

Experience has shown that hydrogen gas can accumulate in the upper part of the condensate pot on conventional open reference leg systems in pressurizer water level service. At Reactor Coolant System operating pressures, high concentrations of dissolved hydrogen in the reference leg water are possible. To eliminate the possibility of such effects, a bellows is used in a pot at the top of the reference leg to provide an interface seal and prevent dissolving of hydrogen gas into the reference leg water. Supplier tests were run which confirmed a time response of less than 1.0 second. A major section of the vertical portion of the sealed sense line is outside the cavity that shields the pressurizer and therefore is not subject to short-term heatup. Since Sequoyah is an ice condenser plant, it does not experience peak temperatures in the upper compartment as high as non-ice condenser plants. The long-term heatup is the only concern. The reference leg is uninsulated and will remain at local ambient temperature. This temperature will vary somewhat over the length of the reference leg piping under normal operating conditions but will not exceed 140°F. During a blowdown accident, any reference leg water flashing to steam will be confined to the condensate steam interface in the condensate pot at the top of the temperature barrier leg and will have only a small (about one inch) effect on measured level. Some additional variance may be expected due to effervescence of hydrogen in the temperature barrier water. However, even if complete loss of this water is assumed, the variance will tend to increase the margin of safety.

The sealed reference leg design has been installed in various plants since early 1970 and operational accuracy was verified at the Robert Ginna Station by use of the sealed reference leg system in parallel with an open reference leg channel. No effects of operating pressure variations on either the accuracy or integrity of the channel have been observed.

Calibration of the sealed reference leg system is done in place after installation by application of known pressure to the low pressure side of the transmitter and measurement of the transmitter output. The effects of static pressure variations are predictable. The largest effect is due to the density change in the saturated fluid in the pressurizer itself. The effect is typical of level measurements in all tanks with two phase fluid and is not peculiar to the sealed reference leg technique. In the sealed reference leg, there is a slight compression of the fill water with increasing pressure, but this is taken up by the flexible bellows. A leak of the fill water in the sealed reference leg can be detected by comparison of redundant channel readings on line and by physical inspection of the reference leg off line. Leaks of the reference leg to atmosphere will be immediately detectable by off scale indications and alarms on the control board. A closed pressurizer level instrument shut off valve would be detected by comparing the level indications from the redundant level channels (three channels). In addition, there are alarms on each one of the three channels to indicate an error between the measured pressurizer water level and the programmed pressurizer water level. There is no single instrument valve which could affect more than one of the three level channels.

The high level trip setpoint provides sufficient margin such that the undesirable condition of discharging liquid coolant through the safety valves is minimized. Even at full power conditions, which would produce the worst thermal expansion rates, a failure of the level control would not lead to any liquid discharge through the safety valves. This is due to the automatic high pressurizer pressure reactor trip actuating at a pressure sufficiently below the safety valve setpoint.

7.2.2.3.5 Steam Generator Water Level

The basic function of the reactor protection circuits associated with low steam generator water level is to preserve the steam generator heat sink for removal of long term residual heat. Should a complete loss of feedwater occur, the reactor would be tripped on low-low steam generator water level. In addition, redundant auxiliary feedwater pumps are provided to supply feedwater in order to maintain residual heat removal after trip preventing eventual thermal expansion and discharge of the reactor coolant through the pressurizer relief valves into the relief tank even when main feedwater pumps are incapacitated. This reactor trip acts before the steam generators are dry to reduce the required capacity and starting time requirements of these auxiliary feedwater pumps and to minimize the thermal transient on the Reactor Coolant System and steam generators. Therefore, a low-low steam generator water level reactor trip is provided for each steam generator to ensure that sufficient initial thermal capacity is available in the steam generator at the start of the transient. It is desirable to minimize thermal transients on a steam generator for a credible loss of feedwater accident.

It should be noted that a single protection system failure that potentially could cause a control system reaction is eliminated by the DCS (Distributed Control System) using a Median Signal Selection (MSS) function. The system checks the quality of the instrument signal inputs and if all are of a good quality, the median signal is then selected for control. Should one of the signal inputs fail, the remaining signals are then averaged to provide the control function. The prime reason for the MSS feature is to prevent a failed protection system instrument channel from causing a disturbance in the feedwater control system requiring subsequent protective system action. All three narrow range steam generator water level channels for each steam generator, which also provide a reactor protection system reactor trip, are applied to the DCS MSS circuitry for feedwater control for its respective feedwater regulating valve. Upon a failure of one steam generator level signal, the remaining level signals for that generator are averaged in the DCS for its feedwater regulating valve control. Since no adverse control system action may now result from a single failed protection instrument channel, a second random protection system failure (as would otherwise be required by IEEE 279-1971) need not be considered.

7.2.2.4 Additional Postulated Accidents

Loss of plant auxiliary control air or loss of component cooling water is discussed in Paragraph 7.3.2.3. Load rejection and turbine trip are discussed in further detail in Section 7.7.

The control interlocks, called rod stops, that are provided to prevent abnormal power conditions which could result from excessive control rod withdrawal are discussed in 7.7.1.4.1 and listed on Table 7.7.1-1. Excessively high power operation (which is prevented by blocking of automatic rod withdrawal), if allowed to continue, might lead to a safety limit (as given in the Technical Specifications) being reached. Before such a limit is reached, protection will be available from the Reactor Trip System. At the power levels of the rod block setpoints, safety limits have not been reached; and therefore these rod withdrawal stops do not come under the scope of safety related systems, and are considered as control systems.

7.2.3 Tests and Inspections

The Reactor Trip System meets the testing requirements of Reference 9. The testability of the system is discussed in 7.2.2.2.3. The test intervals are specified in the Technical Specifications. Written test procedures and documentation, conforming to the requirements of Reference 9, are available for audit by responsible personnel.

Reference 15 documents a methodology to be used to justify revisions to the technical specifications. The methodology consists of the deterministic and numerical evaluation of the effects of particular technical specification changes with consideration given to such things as safety, equipment requirements, human factors and operational impacts. The technical specification revisions evaluated were increased test and maintenance times, less frequent surveillance and testing in bypass.

7.2.3.1 Inservice Tests and Inspections

Periodic surveillance of the Reactor Trip System is performed to ensure proper protective action. This surveillance consists of channel checks, channel calibrations, channel operational testing, and response time testing which are summarized as follows:

1. Channel Checks

   A channel check consists of a qualitative determination of acceptability by observation of channel behavior during operation. It includes comparison of the channel indication and/or status indications and/or status derived from independent channels measuring the same variable. Failures such as blown instrument fuses, defective indicators, or faulted amplifiers which result in "upscale" or "downscale" indication can be easily recognized by simple observation of the functioning of the instrument or system. Furthermore, in many cases such failures are revealed by alarm or annunciator action, and a check supplements this type of surveillance.

2. Channel Calibration

   A channel calibration consists of adjustment of channel output such that it responds, within acceptable range and accuracy, to known values of the parameter which the channel measures. Calibration encompasses the entire channel including the sensor, alarm and/or trip function, and includes the channel operational test discussed below. Thus, the calibration ensures the acquisition and presentation of accurate information.

3. Channel Operational Test

   A channel operational test consists of:

   a. Analog channels - the injection of a simulated signal into the channel as close to the sensor as practicable to verify operability including alarm and/or trip functions.

   b. Bistable channels - the injection of a simulated signal into the sensor to verify operability including alarm and/or trip functions.

   c. Digital channels - the injection of a simulated signal into the channel as close to the sensor input to the process racks as practicable to verify operability including alarm and/or trip functions.

4. Response Time Test

   A response time verification demonstrates that the protective function associated with each applicable channel is completed within the required time limit. The response time verification may consist of any series of sequential, overlapping, or total channel measurements such that the total channel response time is verified to be within the acceptable limits (Table 7.2.1-5).

The minimum frequencies for the surveillance items listed above are defined in the plant technical specifications.

As a result of TS Change No. 99-08 and WCAP-13632 R1, the following requirements must be applied in order to eliminate sensor Response Time Test.

1. Pressure sensor response times must be verified by performance of an appropriate response time test prior to placing a new sensor in to operational service and reverified following maintenance that may adversely affect sensor response time.

2. Pressure sensors (transmitters and switches) utilizing capillary tubes must be subjected to response time testing after initial installation and following any maintenance or modification activity that could damage the transmitter capillary tubes.

3. Pressure transmitters equipped with variable damping capability in reactor trip system or engineered safety feature actuation system response time applications, which required periodic response time test, must be subjected to response time testing after initial installation or following any maintenance or modification activity. Administrative controls may include use of pressure transmitters that are factory set and hermetically sealed to prohibit tampering or in situ application of a tamper seal (or sealant) on the potentiometer to secure and give visual indication of the potentiometer position.

4. Periodic drift monitoring will be performed for all Model 1151, 1152, 1153, and 1154 Rosemount pressure and differential pressure transmitters for which periodic response time testing is required, in accordance with guidance contained in Rosemount Technical Bulletin No. 4 and will continue to remain in full compliance with any prior commitments to Bulletin 90-01, Supplement 1, “Loss of Fill-Oil in Transmitters Manufactured by Rosemount.”

7.2.3.2 Periodic Testing of the Nuclear Instrumentation System

The following periodic tests of the Nuclear Instrumentation System are performed:

1. Testing at plant shutdown

    a. Source range testing
    b. Intermediate range testing
    c. Power range testing

2. Testing between P-6 and P-10 permissive power levels

    a. Intermediate range testing
    b. Power range testing

3. Testing above P-10 permissive power level

    a. Intermediate range testing
    b. Power range testing

Any deviations noted during the performance of these tests are investigated and corrected in accordance with the established calibration and trouble shooting procedures provided in the manufacturer's technical manual for the Nuclear Instrumentation System. Control and protection trip settings are indicated in the plant Technical Specifications and the Precautions, Limitations and Setpoints documents.

7.2.3.3 Periodic Testing of the Process Channels of the Protection Circuits

The following periodic tests of the process channels of the protection circuits are performed:

1. T_{avg} and ΔT protection channel testing
2. Pressurizer pressure protection channels
3. Pressurizer level protection channels
4. Environmental Allowance Modifier and Trip Time Delay Protection Channels
5. Steam generator level protection channels
6. Reactor coolant flow protection channels
7. Impulse chamber pressure channels

The following conditions are incorporated into the procedures for these tests:

1. These tests may be performed at the required frequencies and for the required operational modes as defined in the plant technical specifications.

2. Before starting any of these tests with the plant at power, all redundant reactor trip channels associated with the function to be tested must be in the normal (untripped) mode in order to avoid spurious trips. In accordance with the provisions of the plant technical specifications, certain inoperable channels may be placed in the bypassed mode to accommodate testing of the remaining channels.

3. Setpoints are verified.

Median Signal Selector Testing

The median signal selectors (MSS) that are used for feedwater control (and pressurizer (level and pressure) and steam generator pressure controls as well as in other systems) exist as software modules or blocks in the Distributed Control System (DCS). Prior to maintenance or testing of an individual DCS input channel, the MSS function can be validated that it is working properly. The signals that are applied to the MSS can be compared to the resultant output by reviewing the various signal values in the DCS. The MSS function will then allow testing or maintenance of individual DCS input channels while at power without causing a control system disturbance as long as the other channels are functioning properly and their channels are not tripped or bypassed. The MSS would simply ignore the channel under test.

The DCS has the option to manually remove a channel to be tested from providing input into the DCS control, forcing the DCS logic to ignore the channel to be tested. If two input channels of the same parameter are removed for maintenance at the same time, the DCS will cause the control affected by those signals to shift to manual and initiate an alarm. If the DCS detects a hardware problem with two channels of the same parameter at the same time, the associated control is switched to manual, initiating an alarm to warn the operators.

7.2.4 References

1. J. A. Nay, "Process Instrumentation for Westinghouse Nuclear Steam Supply Systems," WCAP-7547-L, March, 1971 (Westinghouse NES Proprietary); WCAP-7671, May, 1971 (Non-Proprietary), and WCAP-7913, (Non-Proprietary).

2. J. B. Lipchak and R. A. Stokes, "Nuclear Instrumentation System," WCAP-7380-L, January 1971 (Westinghouse NES Proprietary); and WCAP-7669, May, 1971 (Non-Proprietary).

3. D. N. Katz, "Solid State Logic Protection System Description," WCAP-7488-L, March, 1971 (Westinghouse NES Proprietary); and WCAP-7672, May, 1971 (Non-Proprietary).

4. J. P. Doyle "Noise, Fault, Surge, and Radio Frequency Interference Test Report for Westinghouse Eagle-21 Process Protection Upgrade System," WCAP - 11733, June 1988, (Westinghouse Proprietary Class 2).

5. J. B. Lipchak and R. R. Bartholomew, "Test Report Nuclear Instrumentation System Isolation Amplifier," WCAP 7506-L, October 1970 (Westinghouse NES Proprietary); and WCAP-7819 Rev. 1, January 1972 (Non-Proprietry).

6. W. C. Gangloff and W. D. Loftus, " An Evaluation of Solid State Logic Reactor Protection In Anticipated Transients," WCAP-7706-L, (Westinghouse NES Proprietary) and WCAP-7706 (Non-Proprietary).

7. T. W. T. Burnett, "Reactor Protection System Diversity in Westinghouse Pressurizer Water Reactors," WCAP-7306, April 1969.

8. The Institute of Electrical and Electronic Engineers, Inc., "IEEE Standard: Criteria for Protection Systems for Nuclear Power Generating Stations," IEEE Std. 279-1971.

9. The Institute of Electrical and Electronic Engineers, Inc., "IEEE Trial Use Criteria for the Periodic Testing of Nuclear Power Generating Station Protection Systems," IEEE Std.338-1971.

10. The Institute of Electrical and Electronic Engineers, Inc., "IEEE Standard Criteria for Class IE Electrical Systems for Nuclear Power Generating Stations," IEEE Std. 308-1971.

11. The Institute of Electrical and Electronic Engineers, Inc., "IEEE Trial-Use Standard; General Guide for Qualifying Class 1E Electric Equipment for Nuclear Power Generating Stations," IEEE Std. 323-1971.

12. The Institute of Electrical and Electronic Engineers, Inc., "IEEE Trial-Use Guide for Type Tests of Continuous-Duty Class 1E Motor Installed Inside the Containment of Nuclear Power Generating Stations," IEEE Std. 334-1971.

13. The Institute of Electrical and Electronic Engineers, Inc., "IEEE Trial-Use Guide for Seismic Qualification of Class 1E Electric Equipment for Nuclear Power Generating Stations," IEEE Std. 344-1971.

14. "General Design Criteria for Nuclear Power Plants," Appendix A to Title 10 CFR 50, July 7, 1971.

15. E. P. Rahe, "Evaluation of Surveillance Frequencies and Out of Service Times for Reactor Protection System," WCAP 10271 and Supplement 1 (Westinghouse NES Proprietary).

16. C. R. Tuley, "Westinghouse Setpoint Methodology for Protection Systems, Sequoyah Units 1 and 2," WCAP 11239, Rev. 6, December 1991 (Westinghouse Proprietary Class 2).

17. L. E. Erin, "Topical Report Eagle-21 Microprocessor-Based Process Protection System," WCAP-12374, September 1989 (Westinghouse Proprietary Class 2).

18. J. F. Mesmigos, "Median Signal Selector for Foxboro Series Process Instrumentation Application to Deletion of Low Feedwater Flow Reactor Trip," WCAP-12417 (Westinghouse Proprietary Class 2).

19. The Institute of Electrical and Electronic Engineers, Inc., "IEEE Recommended Practices for Seismic Qualification of Class 1E Equipment for Nuclear Power Generating Stations," IEEE Std. 344-1975.

20. ISA-S67.04 - 1982, "Setpoints for Nuclear Safety-Related Instrumentation Used in Nuclear Power Plants".

TABLE 7.2.1-1 (Sheet 1)

LIST OF REACTOR TRIPS

	Reactor Trip	Coincidence Logic	Interlocks	Comments
1.	High neutron flux (Power Range)	2/4	Manual block of low setting permitted by P-10	High and low settings: manual block and automatic reset of low setting by P-10
2.	Intermediate range neutron flux	1/2	Manual block permitted by P-10	Manual block and automatic reset
3.	Source range neutron flux	1/2	Manual block permitted by P-6, interlocked with P-10	Manual block and automatic reset. Automatic block above P-10
4.	Power range high positive neutron flux rate	2/4	No interlocks	
5.	Power range high negative neutron flux rate	2/4	No interlocks	
6.	Overtemperature ΔT	2/4	No interlocks	
7.	Overpower ΔT	2/4	No interlocks	
8.	Pressurizer low pressure	2/4	Interlocked with P-7	Blocked below P-7
9.	Pressurizer high pressure	2/4	No interlocks	
10.	Pressurizer high water level	2/3	Interlocked with P-7	Blocked below P-7
11.	Low reactor coolant flow	2/3 per loop	Interlocked with P-7 and P-8	Low flow in 1 loop will cause a reactor trip when above P-8 and low flow in two loops will cause a reactor trip when above P-7. Blocked below P-7.
12.	Reactor coolant pump undervoltage	2/4	Interlocked with P-7	Low voltage on all buses permitted below P-7

TABLE 7.2.1-1 (Sheet 2)

LIST OF REACTOR TRIPS

	Reactor Trip	Coincidence Logic	Interlocks	Comments
13.	Reactor coolant pump underfrequency	2/4	Interlocked with P-7	Under frequency on 2 buses will cause reactor trip; reactor trip blocked below P-7
14.	Low-low steam generator water level	2/3 per loop	No interlocks	
15.	Safety injection signal	Coincident with actuation of safety injection	No interlocks	(See Section 7.3 for Engineered Safety Features actuation conditions)
17.	Turbine-generator trip			
	a) Low emergency trip header pressure	2/3	Interlocked with P-9	Blocked below P-9
	b) Turbine stop valve	4/4	Interlocked with P-9	Blocked below P-9
18.	Manual	1/2	No interlocks	

Note: See Table 7.2.1-2 Protection System Interlocks for definition of designations.

TABLE 7.2.1-2

PROTECTION SYSTEM INTERLOCKS

Designation	Derivation	Function
	POWER ESCALATION PERMISSIVES	
P-6	1/2 Neutron flux (intermediate range) above setpoint	Allows manual block of source range reactor trip
	2/2 Neutron flux (intermediate range) below setpoint	Defeats the block of source range reactor trip
P-10	2/4 Neutron flux (power range) above setpoint	Allows manual block of power range (low setpoint reactor trip)
		Allows manual block of intermediate range reactor trip and intermediate range rod stops (C-1)
		Blocks source range reactor trip (back-up for P-6)
	3/4 Neutron flux (power range) below setpoint	Defeats the block of power range (low setpoint) reactor trip
		Defeats the block of intermediate range reactor trip and intermediate range rod stops (C-1)
		Input to P-7
	BLOCKS OF REACTOR TRIPS	
P-7	3/4 Neutron flux (power range) below setpoint (from P-10) and 2/2 Turbine impulse chamber pressure below setpoint (from P-13)	Blocks reactor trip on: Low flow, reactor coolant pump, under-voltage, and under-frequency, pressurizer low pressure, and pressurizer high level
P-8	3/4 Neutron flux (power range) below setpoint	Blocks low primary coolant flow reactor trip for low flow in a single loop
P-9	Absence of P-9: 3/4 neutron flux (power range) below setpoint	Blocks reactor trip on turbine trip
P-13	2/2 Turbine impulse chamber pressure below setpoint	Input to P-7

Note: See Table 7.7.1-1 Plant Control System Interlocks for explanation of C-1.

TABLE 7.2.1-3 (Sheet 1)

TRIP CORRELATION

TRIP	ACCIDENT[a]	TECH SPEC
1. Source Range High Flux	15.2.1 1. Uncontrolled RCCA Bank Withdrawal from a Sub-critical Condition	Not used in[b] Safety Analysis
2. Intermediate Range, High Flux	15.2.1 1. Uncontrolled RCCA Bank Withdrawal from a Sub-critical Condition	Not used in[b] Safety Analysis
3. Power Range, High Flux (Low Setpoint)	15.2.1 1. Uncontrolled RCCA Bank Withdrawal from a Sub-critical Condition	3.3.1
4. Power Range, High Flux (High Setpoint)	15.2.1 1. Uncontrolled RCCA Bank Withdrawal from a Sub-critical Condition 15.2.2 2. Uncontrolled RCCA Bank Withdrawal at Power 15.2.6 3. Startup of an Inactive R. C. Loop 15.2.10 4. Excessive Heat Removal Due to Feedwater System Malfunction 15.2.11 5. Excessive load Increase 15.2.13 6. Accidental Depressurization of the Main Steam System	3.3.1
5. Positive Neutron Flux Rate	15.4.6 Rod Ejection	3.3.1
6. Negative Neutron Flux Rate	15.2.3 1. RCCA Misalignment	3.3.1

TABLE 7.2.1-3 (Sheet 2)

TRIP CORRELATION

TRIP	ACCIDENT[a]	TECH SPEC
7. Overpower ΔT	15.2.2 1. Uncontrolled RCCA Bank Withdrawal at Power 15.2.10 2. Excessive heat removal due to feedwater system malfunction 15.2.11 3. Excessive load Increase 15.2.13 4. Accidental Depressurization of the main steam system	3.3.1
8. Overtemperature ΔT	15.2.2 1. Uncontrolled RCCA Bank Withdrawal at Power 15.2.4 2. Uncontrolled Boron Dilution 15.2.7 3. Loss of external electrical load and/or turbine trip 15.2.10 4. Excessive heat removal due to feedwater system malfunction 15.2.11 5. Excessive load Increase 15.2.12 6. Accidental depressurization of the RC system 15.2.13 7. Accidental depressurization of the main steam system	3.3.1
9. Low Primary Coolant flow a. Undervoltage b. Underfrequency c. Low flow One of 3 loops	15.2.5 1. Partial loss of forced reactor coolant flow 15.2.9 2. Loss of offsite power to the station auxiliaries (station blackout)	3.3.1

TABLE 7.2.1-3 (Sheet 3)

TRIP CORRELATION

TRIP	ACCIDENT[(a)]	TECH SPEC
d. Low flow Two to 3 loops		
10. Pressurizer High Pressure	15.2.2 1. Uncontrolled RCCA Bank withdrawal at power	3.3.1
11. Pressurizer High Water Level	15.2.2 1. Uncontrolled RCCA Bank withdrawal at power 15.2.7 2. Loss of external electrical load and/or turbine trip	3.3.1
12. Pressurizer Low Pressure	15.2.12 1. Accidental Depressurization of the RC System	3.3.1
13. Lo-Lo SG water level	15.2.8 1. Loss of normal feedwater	3.3.1

(a) Chapter 15 Subsection number
(b) Credit not taken for trip for reasons of conservatism in the safety analyses.

TABLE 7.2.1-4

REACTOR TRIP SYSTEM INSTRUMENT ACCURACIES

	Reactor Trip Signal	Note
1.	Power range high neutron flux (Low and high power setpoints)	(1)
2.	Intermediate range high neutron flux	(1)
3.	Source range high neutron flux	(1)
4.	Power range high positive neutron flux rate neutron flux rate	(1)
5.	Power range high negative neutron flux rate	(1)
6.	Overtemperature ΔT	(1)
7.	Overpower ΔT	(1)
8.	Pressurizer low pressure	(1)
9.	Pressurizer high pressure	(1)
10.	Pressurizer high water level	(1)
11.	Low-low Steam Generator water level	(1)
12.	Loss of reactor coolant flow	(1)
13.	RCP undervoltage	(1)
14.	RCP underfrequency	(1)

NOTES

(1) See Reference 16 for System Accuracy

TABLE 7.2.1-5 (Sheet 1)

REACTOR TRIP SYSTEM INSTRUMENTATION RESPONSE TIMES

FUNCTIONAL UNIT	RESPONSE TIME
1. Manual Reactor Trip	Not Applicable
2. Power Range Neutron Flux	≤ 0.5 seconds *
3. Power Range, Neutron Flux, High Positive Rate	Not Applicable
4. Power Range, Neutron Flux, High Negative Rate	≤ 0.5 seconds *
5. Intermediate Range, Neutron Flux	Not Applicable
6. Source Range, Neutron Flux	Not Applicable
7. Overtemperature Delta T	≤ 8.0 seconds *
8. Overpower Delta T	≤ 8.0 seconds *
9. Pressurizer Pressure -- Low	≤ 2.0 seconds
10. Pressurizer Pressure -- High	≤ 2.0 seconds
11. Pressurizer Water Level -- High	Not Applicable
12. Loss of Flow - Single Loop (Above P-8)	≤ 1.0 seconds
13. Loss of Flow - Two Loops (Above P-7 and below P-8)	≤ 1.0 seconds
14. Main Steam Generator Water Level -- Low - Low	
A. RCS Loop _T (P ≤ 50% RTP: P > 50% RTP)	≤ 8.0 seconds (1)
B. Steam Generator Water Level -- Low-Low (Adverse EAM)	≤ 2.0 seconds (1)
C. Containment Pressure (EAM)	≤ 2.0 seconds (1)
15. Deleted	
16. Undervoltage - Reactor Coolant Pumps	≤ 1.2 seconds
17. Underfrequency - Reactor Coolant Pumps	≤ 0.6 seconds
18. Turbine Trip	
A. Low Fluid Oil Pressure	Not Applicable
B. Turbine Stop Valve	Not Applicable

TABLE 7.2.1-5 (Sheet 2)

REACTOR TRIP SYSTEM INSTRUMENTATION RESPONSE TIMES

FUNCTIONAL UNIT	RESPONSE TIME
19. Safety Injection Input from ESF	Not Applicable
20. Reactor Trip Breakers	Not Applicable
21. Automatic Trip Logic	Not Applicable
22. Reactor Trip System Interlocks	Not Applicable

* Neutron detectors are exempt from response time testing. Response time of the neutron flux signal portion of the channel shall be measured from detector output or input of first electronic component in channel.

(1) Does not include Trip Time Delays. Response times noted include the transmitters, Eagle-21 process protection cabinets, solid state protection cabinets, and actuation devices. This reflects the response time necessary for THERMAL POWER in excess of 50% RTP.

Note: Not Applicable indicates that this is not used in the Chapter 15 analysis.

LOGIC SYMBOLS

SYMBOL	LOGIC FUNCTION	
	AND	A DEVICE WHICH PRODUCES AN OUTPUT ONLY WHEN EVERY INPUT EXISTS.
	NOT	A DEVICE WHICH PRODUCES AN OUTPUT ONLY WHEN THE INPUT DOES NOT EXIST.
	OR	A DEVICE WHICH PRODUCES AN OUTPUT WHEN ONE INPUT (OR MORE) EXISTS.
	OFF RETURN MEMORY	A DEVICE WHICH RETAINS THE CONDITION OF OUTPUT CORRESPONDING TO THE LAST ENERGIZED INPUT, EXCEPT UPON INTERRUPTION OF POWER IT RETURNS TO THE OFF CONDITION.
	RETENTIVE MEMORY	A DEVICE WHICH RETAINS THE CONDITION OF OUTPUT CORRESPONDING TO THE LAST ENERGIZED INPUT (ALSO UPON INTERRUPTION OF POWER).
	ADJUSTABLE TIME DELAY ENERGIZING	A DEVICE WHICH PRODUCES AN OUTPUT FOLLOWING DEFINITE INTENTIONAL TIME DELAY AFTER RECEIVING AN INPUT.
	ADJUSTABLE TIME DELAY DE-ENERGIZING	A DEVICE WHICH CONTINUES TO PRODUCE AN OUTPUT FOR A DEFINITE INTENTIONAL PERIOD OF TIME AFTER THE INPUT HAS BEEN REMOVED.
2/3	COINCIDENCE (2 OUT OF 3 SHOWN)	A DEVICE WHICH PRODUCES AN OUTPUT WHEN THE PRESCRIBED NUMBER OF INPUTS EXIST (EXAMPLE 2 INPUTS MUST EXIST FOR AN OUTPUT).
M. R. L R	RETENTIVE MEMORY WITH MANUAL RESET	A DEVICE HAVING THE LOGICAL FUNCTION AS INDICATED BY THE DIAGRAM BELOW

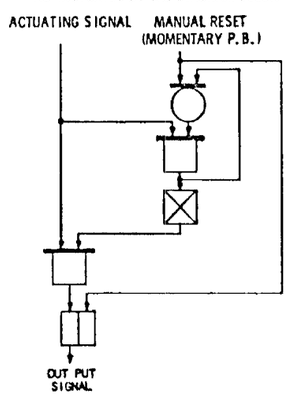

ADDITIONAL SYMBOLS

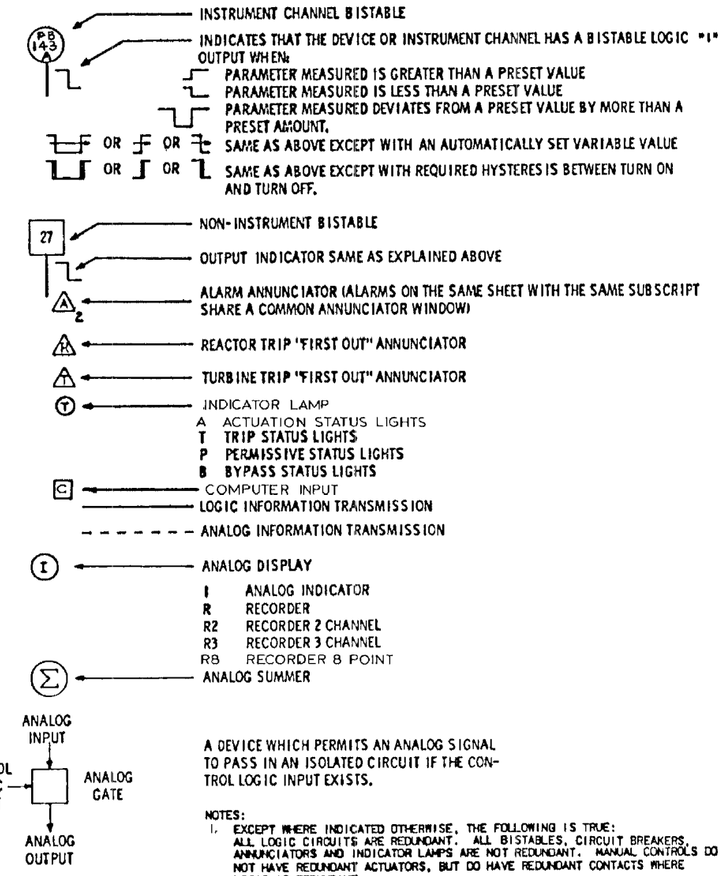

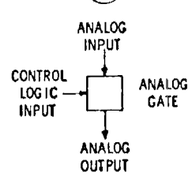

A DEVICE WHICH PERMITS AN ANALOG SIGNAL TO PASS IN AN ISOLATED CIRCUIT IF THE CONTROL LOGIC INPUT EXISTS.

NOTES:

1. EXCEPT WHERE INDICATED OTHERWISE, THE FOLLOWING IS TRUE: ALL LOGIC CIRCUITS ARE REDUNDANT. ALL BISTABLES, CIRCUIT BREAKERS, ANNUNCIATORS AND INDICATOR LAMPS ARE NOT REDUNDANT. MANUAL CONTROLS DO NOT HAVE REDUNDANT ACTUATORS, BUT DO HAVE REDUNDANT CONTACTS WHERE LOGIC IS REDUNDANT.
2. THIS SET OF DRAWINGS IS IDENTICAL FOR UNITS 1 & 2 EXCEPT FOR THE TAG NUMBERS.
   FOR UNIT 1, TAG NUMBERS ADD A "1". EXAMPLE: 1PC-455E.
   FOR UNIT 2, TAG NUMBERS ADD A "2". EXAMPLE: 2PC-455E.
3. WHENEVER A PROCESS SIGNAL IS USED FOR CONTROL AND IS DERIVED FROM A PROTECTION CHANNEL, ISOLATION MUST BE PROVIDED.
4. THIS SET OF DRAWINGS ILLUSTRATES THE FUNCTIONAL REQUIREMENTS OF THE REACTOR CONTROL AND PROTECTION SYSTEM. THESE DRAWINGS DO NOT REPRESENT ACTUAL HARDWARE IMPLEMENTATION.
5. SHEET NUMBERS REFER TO THE FSAR FIGURE 7.2.1-1 SHEET #.

DEVICE FUNCTION LETTERS AND NUMBERS

FB	FLOW CHANNEL
LB	LEVEL CHANNEL
NC	NUCLEAR CHANNEL
PB	PRESSURE CHANNEL
RC	RADIATION CHANNEL
SB	SPEED CHANNEL
TB	TEMPERATURE CHANNEL
ZB	POSITION CHANNEL
20	ELECTRIC OPERATED VALVE
27	UNDERVOLTAGE RELAY
33	POSITION SWITCH
52	AC CIRCUIT BREAKER
63	PRESSURE SWITCH
71	LEVEL SWITCH
80	FLOW SWITCH
81	UNDERFREQUENCY RELAY

ADDITIONAL LOGIC SYMBOLS

SYMBOL	LOGIC FUNCTION
MIN/HOLD	AFTER RECEIPT OF THE CONTROL LOGIC INPUT THE MIN/HOLD UNIT OUTPUT WILL BE ALLOWED TO DECREASE IF THE UNIT INPUT DECREASES. IF THE INPUT TO THE UNIT INCREASES, THE UNIT OUTPUT WILL HOLD THE MINIMUM VALUE, SINCE RECEIPT OF CONTROL LOGIC.

TITLE	INDEX	SHEET NO.
INDEX AND SYMBOLS		1
REACTOR TRIP SIGNALS		2
NUCLEAR INSTR. AND MANUAL TRIP SIGNALS		3
NUCLEAR INSTR. PERMISSIVES AND BLOCKS		4
PRIMARY COOLANT SYSTEM TRIP SIGNALS		5
PRESSURIZER TRIP SIGNALS		6
STEAM GENERATOR TRIP SIGNALS		7
SAFEGUARDS ACTUATION SIGNALS		8
ROD CONTROLS & ROD BLOCKS		9
STEAM DUMP CONTROL		10
PRESSURIZER PRESSURE & LEVEL CONTROL		11
PRESSURIZER HEATER CONTROL		12
FEEDWATER CONTROL & ISOLATION		13
FEEDWATER CONTROL & ISOLATION		14
AUXILIARY FEEDWATER PUMPS STARTUP		15
TURBINE TRIPS, RUNBACKS & OTHER SIGNALS (Ⓜ REQUIREMENTS)		16
EAM/TTD LOGIC, PROTECTION SET I		17
EAM/TTD LOGIC, PROTECTION SET II		18
EAM/TTD LOGIC, PROTECTION SET III		19
EAM/TTD LOGIC, PROTECTION SET IV		20

SEQUOYAH NUCLEAR PLANT
FINAL SAFETY
ANALYSIS REPORT

FIGURE 7.2.1-1 SHEET 1

FUNCTIONAL DIAGRAMS-INDEX AND SYMBOLS
(REVISED BY AMENDMENT 13)

DRAWING SERVICES UNIT
PROCAD MAINTAINED DRAWING
THIS CONFIGURATION CONTROL DRAWING IS MAINTAINED BY THE SQN CAD UNIT AND IS PART OF THE TVA PROCADAM DATABASE.
COMPUTER GRAPHICS

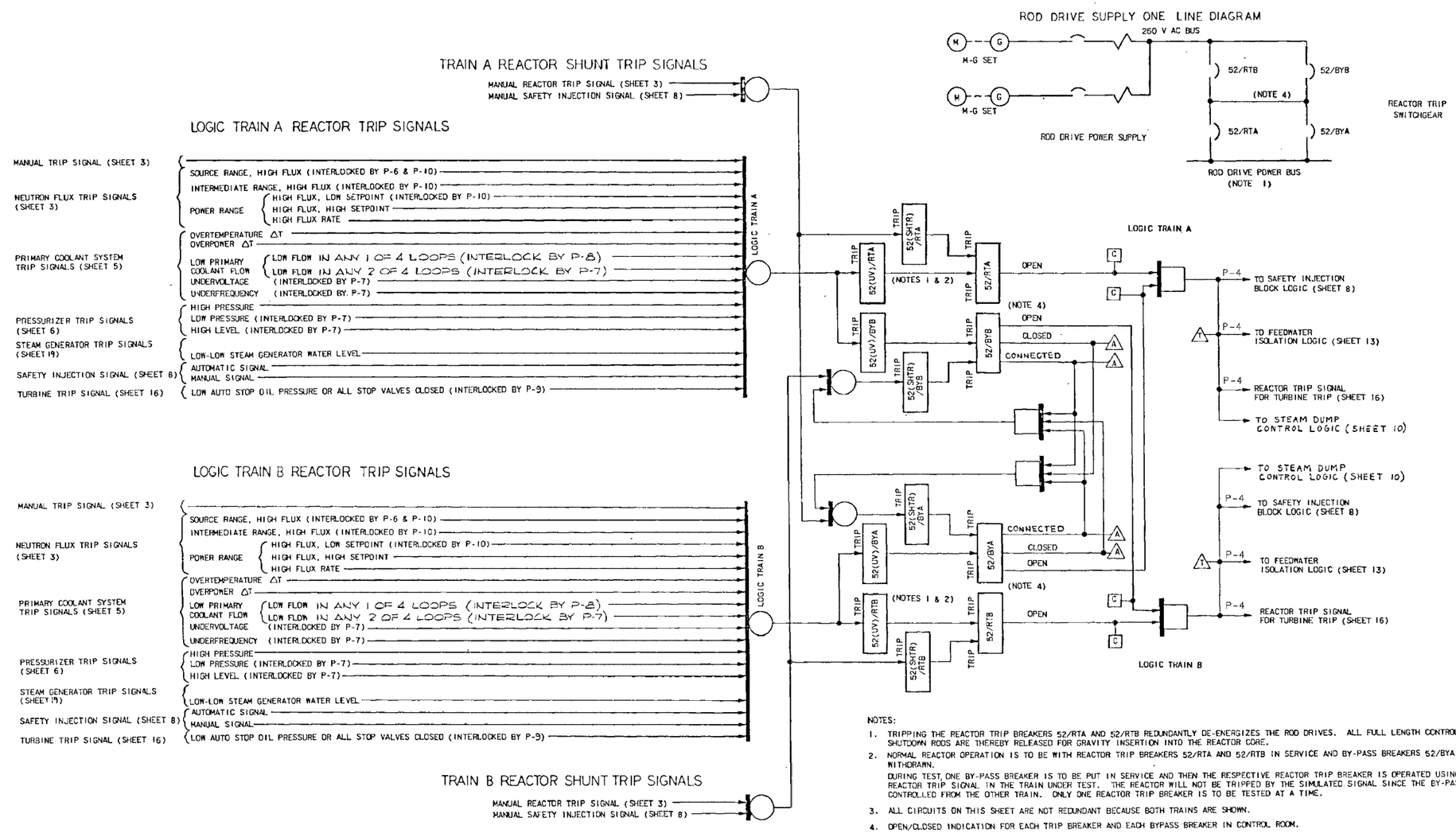

NOTES:

1. TRIPPING THE REACTOR TRIP BREAKERS 52/RTA AND 52/RTB REDUNDANTLY DE-ENERGIZES THE ROD DRIVES. ALL FULL LENGTH CONTROL RODS AND SHUTDOWN RODS ARE THEREBY RELEASED FOR GRAVITY INSERTION INTO THE REACTOR CORE.
2. NORMAL REACTOR OPERATION IS TO BE WITH REACTOR TRIP BREAKERS 52/RTA AND 52/RTB IN SERVICE AND BY-PASS BREAKERS 52/BYA AND 52/BYB WITHDRAWN.
   DURING TEST, ONE BY-PASS BREAKER IS TO BE PUT IN SERVICE AND THEN THE RESPECTIVE REACTOR TRIP BREAKER IS OPERATED USING A SIMULATED REACTOR TRIP SIGNAL IN THE TRAIN UNDER TEST. THE REACTOR WILL NOT BE TRIPPED BY THE SIMULATED SIGNAL SINCE THE BY-PASS BREAKER IS CONTROLLED FROM THE OTHER TRAIN. ONLY ONE REACTOR TRIP BREAKER IS TO BE TESTED AT A TIME.
3. ALL CIRCUITS ON THIS SHEET ARE NOT REDUNDANT BECAUSE BOTH TRAINS ARE SHOWN.
4. OPEN/CLOSED INDICATION FOR EACH TRIP BREAKER AND EACH BYPASS BREAKER IN CONTROL ROOM.
5. CLOSING A BYPASS BREAKER WILL ACTUATE THE SOLID STATE PROTECTION SYSTEM GENERAL WARNING ALARM SYSTEM FOR THAT TRAIN. ACTUATION OF THE GENERAL WARNING ALARM SYSTEM ON BOTH TRAIN A AND TRAIN B WILL SEND TRIP SIGNALS TO ALL FOUR BREAKERS (RTA, RTB, BYA, BYB,) THROUGH THE UNDERVOLTAGE COILS.
6. SHEET NUMBERS REFER TO FIGURE 7.2.1-1 (SHEET NUMBER).

SEQUOYAH NUCLEAR PLANT
FINAL SAFETY
ANALYSIS REPORT

FIGURE 7.2.1-1 SHEET 2

FUNCTIONAL DIAGRAMS-REACTOR TRIP SIGNALS
(REVISED BY AMENDMENT 13)

DRAWING SERVICES UNIT
PROCAD MAINTAINED DRAWING
THIS CONFIGURATION CONTROL DRAWING IS MAINTAINED BY THE SQN CAD UNIT AND IS PART OF THE TVA PROCADAM DATABASE.
COMPUTER GRAPHICS

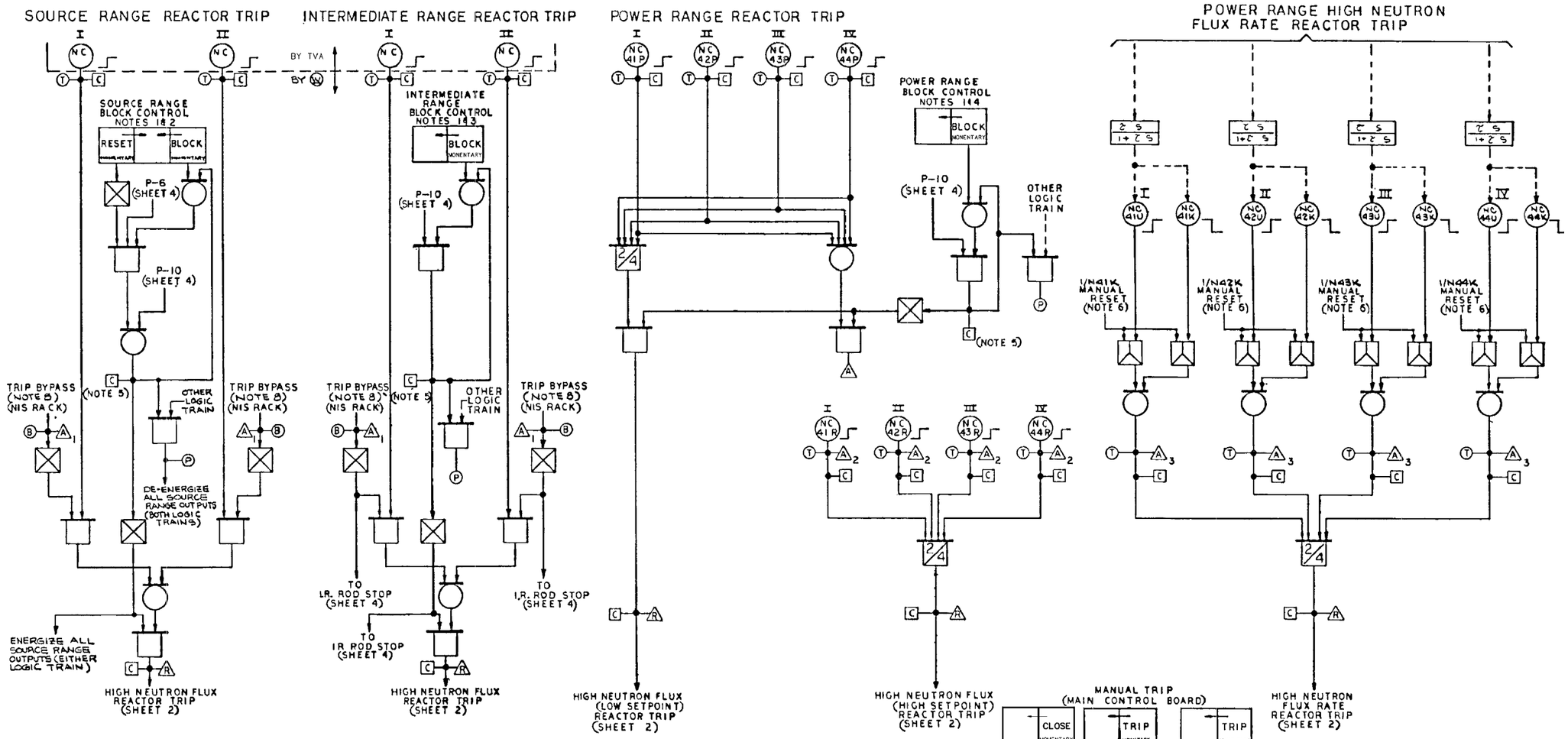

NOTES:

1. THE REDUNDANT MANUAL BLOCK CONTROLS CONSIST OF TWO CONTROLS ON THE CONTROL BOARD FOR EACH RANGE, ONE FOR EACH TRAIN.
2. 1/N 33A IS IN LOGIC TRAIN A.
   1/N 33B IS IN LOGIC TRAIN B.
3. 1/N 38A IS IN LOGIC TRAIN A.
   1/N 38B IS IN LOGIC TRAIN B.
4. 1/N 47A IS IN LOGIC TRAIN A.
   1/N 47B IS IN LOGIC TRAIN B.
5. TWO COMPUTER INPUTS ARE CONNECTED TO THIS CIRCUIT, INDIVIDUAL FOR EACH TRAIN.
6. MANUAL RESET CONTROL & CONSIST OF FOUR MOMENTARY CONTROLS IN THE CONTROL ROOM, ONE CONTROL FOR EACH INSTRUMENT CHANNEL.

SEQUOYAH NUCLEAR PLANT
FINAL SAFETY
ANALYSIS REPORT

FIGURE 7.2.1-1 SHEET 3

FUNCTIONAL DIAGRAMS-NUCLEAR INSTR & MANUAL TRIP SIGNALS
(REVISED BY AMENDMENT 20)

CAD MAINTAINED DRAWING

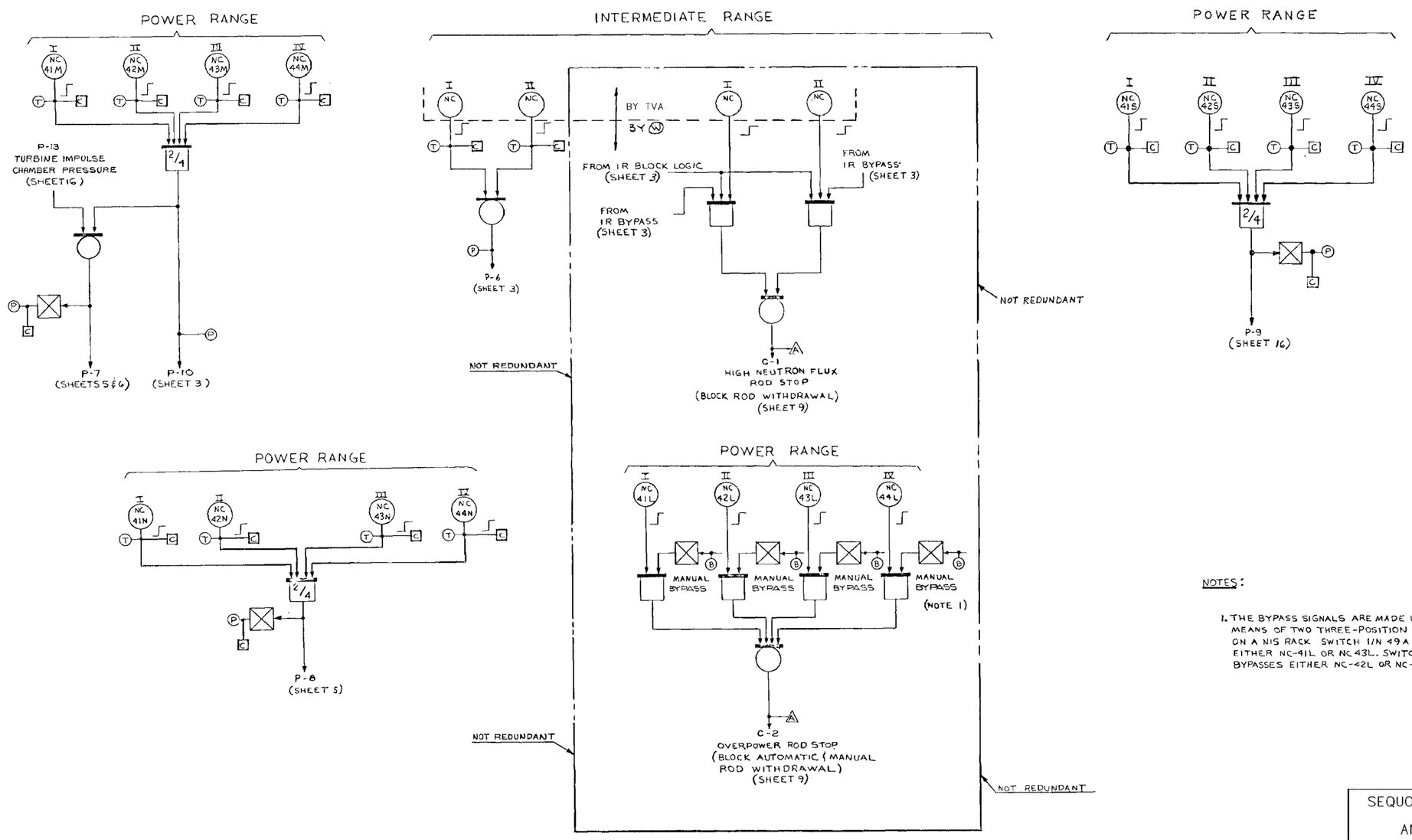

NOTES:

1. THE BYPASS SIGNALS ARE MADE UP BY MEANS OF TWO THREE-POSITION SWITCHES ON A NIS RACK. SWITCH 1/N 49A BYPASSES EITHER NC-41L OR NC 43L. SWITCH 1/N 49B BYPASSES EITHER NC-42L OR NC-44L.

SEQUOYAH NUCLEAR PLANT
FINAL SAFETY
ANALYSIS REPORT

FIGURE 7.2.1-1 SHEET 4

FUNCTIONAL DIAGRAMS-NUCLEAR
INSTR PERMISSIVES & BLOCKS
(REVISED BY AMENDMENT 13)

DRAWING SERVICES UNIT
PROCAD MAINTAINED DRAWING
THIS CONFIGURATION CONTROL DRAWING IS MAINTAINED BY THE SQN CAD UNIT AND IS PART OF THE TVA PROCADAM DATABASE.
COMPUTER GRAPHICS

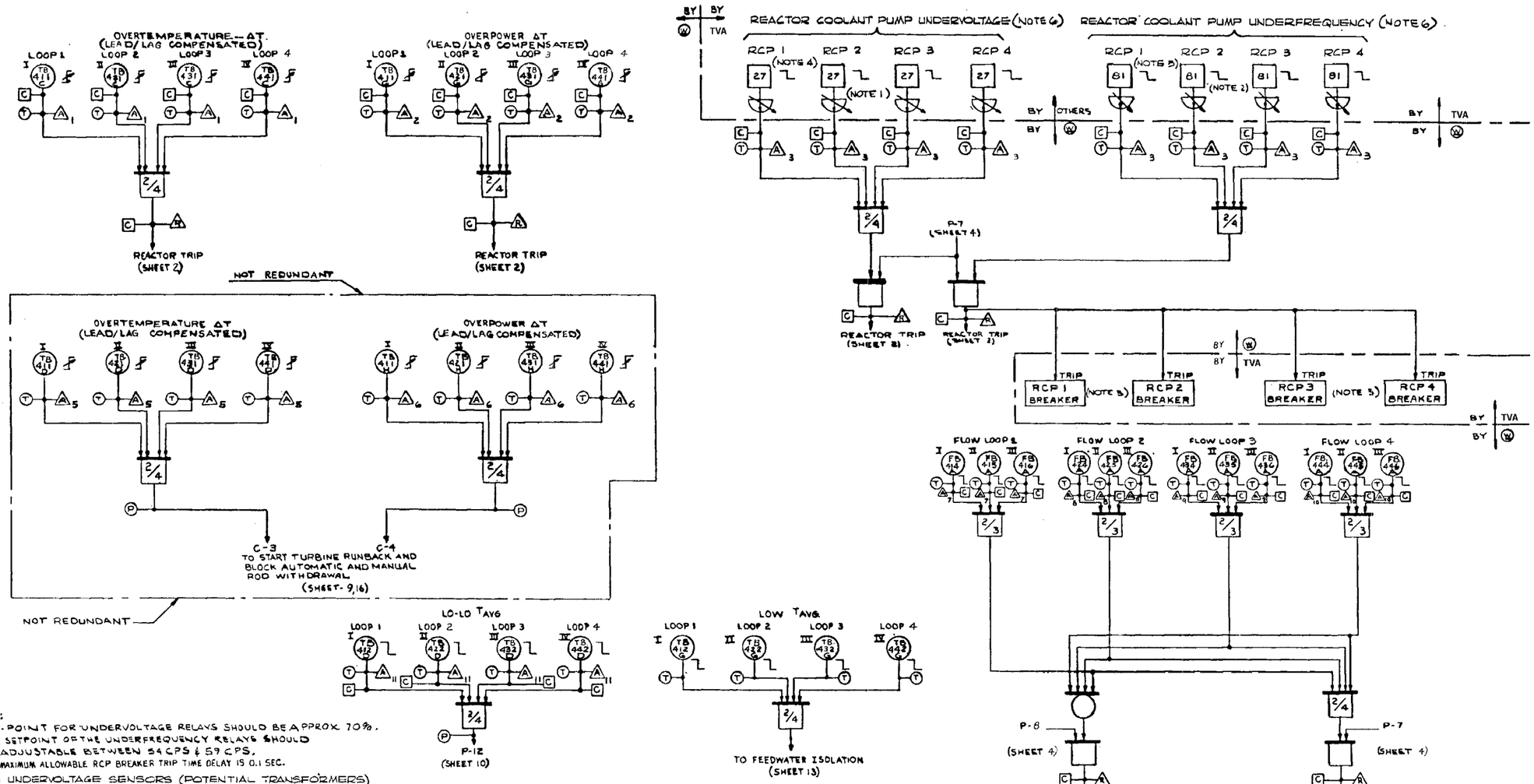

NOTES:

1. SET-POINT FOR UNDERVOLTAGE RELAYS SHOULD BE APPROX. 70%.
2. THE SETPOINT OF THE UNDERFREQUENCY RELAYS SHOULD BE ADJUSTABLE BETWEEN 54 CPS & 59 CPS.
3. THE MAXIMUM ALLOWABLE RCP BREAKER TRIP TIME DELAY IS 0.1 SEC.
4. THE UNDERVOLTAGE SENSORS (POTENTIAL TRANSFORMERS) MUST BE LOCATED ON THE MOTOR SIDE OF THE RCP CIRCUIT BREAKERS TO DETECT THE TRIP OF THE RCP CIRCUIT BREAKERS IN ADDITION TO BUS UNDERVOLTAGE.
5. THE UNDERFREQUENCY SENSORS MAY BE LOCATED ON THE MOTOR SIDE OF THE RCP CIRCUIT BREAKERS.
6. REACTOR TRIP SYSTEM RESPONSE TIME REQUIREMENTS FOR RCP UNDERVOLTAGE IS ≤ 1.2 SEC., & FOR UNDERFREQUENCY IS ≤ 0.6 SEC. THE RESPONSE TIME IS DEFINED AS THE ELAPSED TIME FROM THE BISTABLE CHANGE OF STATE TO THE BEGINNING OF CONTROL ROD MOTION.

SEQUOYAH NUCLEAR PLANT
FINAL SAFETY
ANALYSIS REPORT

FIGURE 7.2.1-1 SHEET 5

FUNCTIONAL DIAGRAMS-PRIMARY COOLANT SYS TRIP SIGNALS
(REVISED BY AMENDMENT 13)

DRAWING SERVICES UNIT
PROCAD MAINTAINED DRAWING
THIS CONFIGURATION CONTROL DRAWING IS MAINTAINED BY THE SQN CAD UNIT AND IS PART OF THE TVA PROCADAM DATABASE.
COMPUTER GRAPHICS

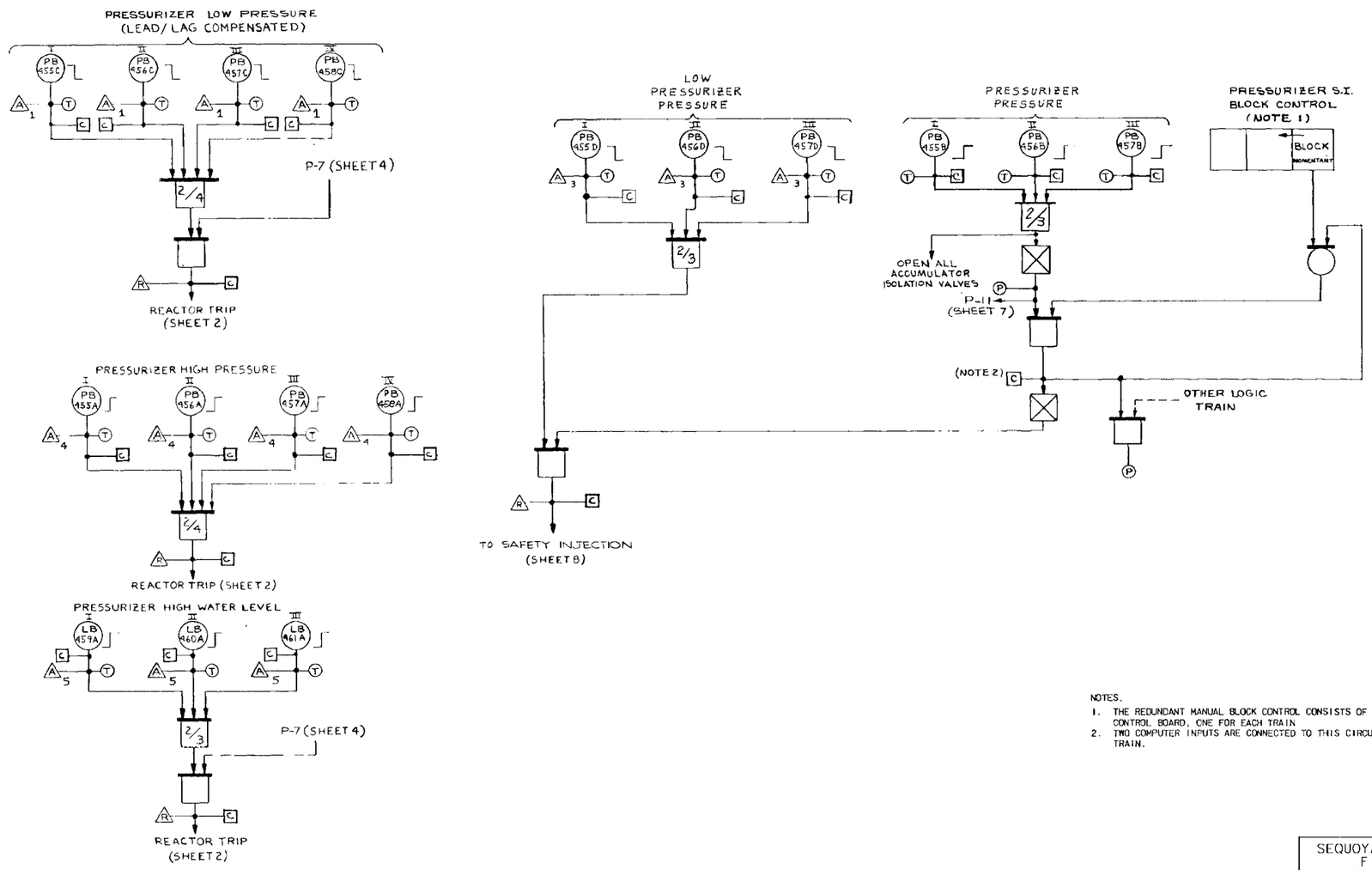

NOTES.

1. THE REDUNDANT MANUAL BLOCK CONTROL CONSISTS OF TWO CONTROLS ON THE CONTROL BOARD, ONE FOR EACH TRAIN
2. TWO COMPUTER INPUTS ARE CONNECTED TO THIS CIRCUIT. INDIVIDUAL FOR EACH TRAIN.

SEQUOYAH NUCLEAR PLANT
FINAL SAFETY
ANALYSIS REPORT

FIGURE 7.2.1-1 SHEET 6

FUNCTIONAL DIAGRAMS-PRZ TRIP SIGNALS
(REVISED BY AMENDMENT 13)

DRAWING SERVICES UNIT
PROCAD MAINTAINED DRAWING
THIS CONFIGURATION IS CONTROLLED AND MAINTAINED BY THE DSN CAD UNIT AND IS PART OF THE TVA PROCADM DATABASE.
COMPUTER GENERATED

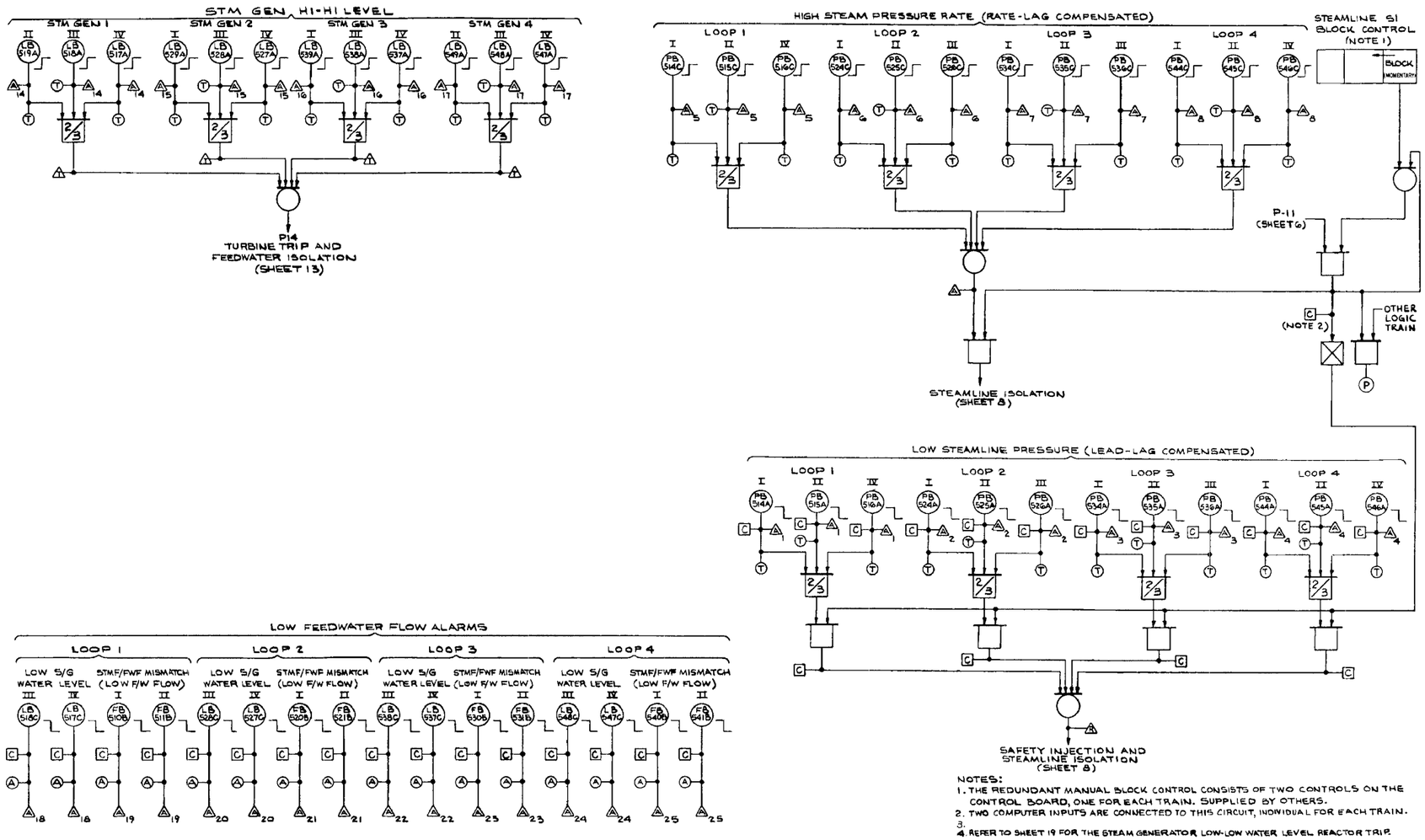

NOTES:

1. THE REDUNDANT MANUAL BLOCK CONTROL CONSISTS OF TWO CONTROLS ON THE CONTROL BOARD, ONE FOR EACH TRAIN. SUPPLIED BY OTHERS.
2. TWO COMPUTER INPUTS ARE CONNECTED TO THIS CIRCUIT, INDIVIDUAL FOR EACH TRAIN.
3.
4. REFER TO SHEET 19 FOR THE STEAM GENERATOR LOW-LOW WATER LEVEL REACTOR TRIP.

SEQUOYAH NUCLEAR PLANT
FINAL SAFETY
ANALYSIS REPORT

FIGURE 7.2.1-1 SHEET 7

FUNCTIONAL DIAGRAMS-STEAM GENERATOR TRIP SIGNALS
(REVISED BY AMENDMENT 13)

DRAWING SERVICES UNIT
PROCAD MAINTAINED DRAWING
THIS CONFIGURATION CONTROL DRAWING IS MAINTAINED BY THE SDN CAD UNIT AND IS PART OF THE TVA PROCADAM DATABASE.
COMPUTER GRAPHICS

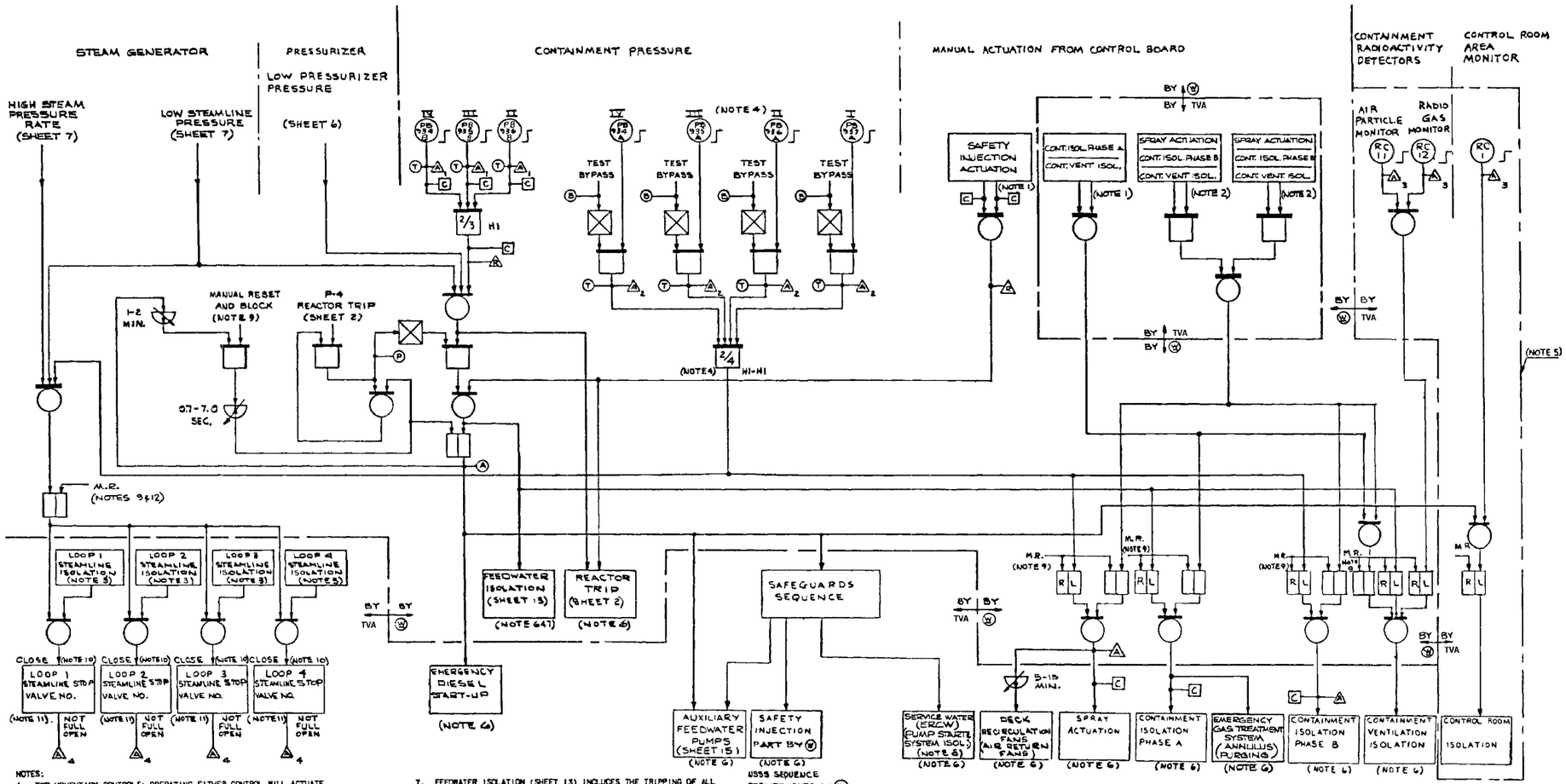

NOTES:

1. TWO MOMENTARY CONTROLS; OPERATING EITHER CONTROL WILL ACTUATE.
2. THE MANUAL SPRAY ACTUATION CONSISTS OF FOUR MOMENTARY CONTROLS. ACTUATION WILL OCCUR ONLY IF TWO ASSOCIATED CONTROLS ARE OPERATED SIMULTANEOUSLY.
3. ONE MAINTAINED CONTROL PER LOOP.
4. CONTAINMENT PRESSURE BISTABLES FOR SPRAY ACTUATION ARE ENERGIZE TO ACTUATE (OTHER BISTABLES ARE DE-ENERGIZE TO ACTUATE).
5. ENCLOSED CIRCUITRY IS NOT PART OF THE SAFEGUARDS SYSTEM AND IS NOT REDUNDANT.
6. COMPONENTS ARE ALL INDIVIDUALLY SEALED IN (LATCHED), SO THAT LOSS OF THE ACTUATION SIGNAL WILL NOT CAUSE THESE COMPONENTS TO RETURN TO THE CONDITION HELD PRIOR TO THE ADVENT OF THE ACTUATION SIGNAL.
7. FEEDWATER ISOLATION (SHEET 13) INCLUDES THE TRIPPING OF ALL MAIN FEEDWATER PUMPS.
8. SERVICE WATER SYSTEM ISOLATION IS USED ONLY IF REQUIRED.
9. THE REDUNDANT MANUAL RESET CONSISTS OF TWO MOMENTARY CONTROLS ON THE CONTROL BOARD, ONE FOR EACH TRAIN.
10. ALSO CLOSES THE BYPASS VALVE IN PARALLEL WITH THE ASSOCIATED STEAM LINE STOP VALVE.
11. LIGHTS SHOULD BE PROVIDED IN THE CONTROL ROOM FOR EACH STEAMLINE STOP VALVE TO INDICATE WHEN THE VALVE IS FULLY CLOSED OR FULLY OPEN.
12. MANUAL RESET IS EFFECTED ONLY IF ALL INDIVIDUAL VALVE CONTROLS ARE IN THE CLOSED POSITION.

SEQUOYAH NUCLEAR PLANT
FINAL SAFETY
ANALYSIS REPORT

FIGURE 7.2.1-1 SHEET 8

FUNCTIONAL DIAGRAMS-SAFEGUARDS ACTUATION SIGNALS
(REVISED BY AMENDMENT 13)

DRAWING SERVICES UNIT
PROCAD MAINTAINED DRAWING
THIS CONFIGURATION CONTROL DRAWING IS MAINTAINED BY THE SQN CAD UNIT AND IS PART OF THE TVA PROCADAM DATABASE.
COMPUTER GRAPHICS

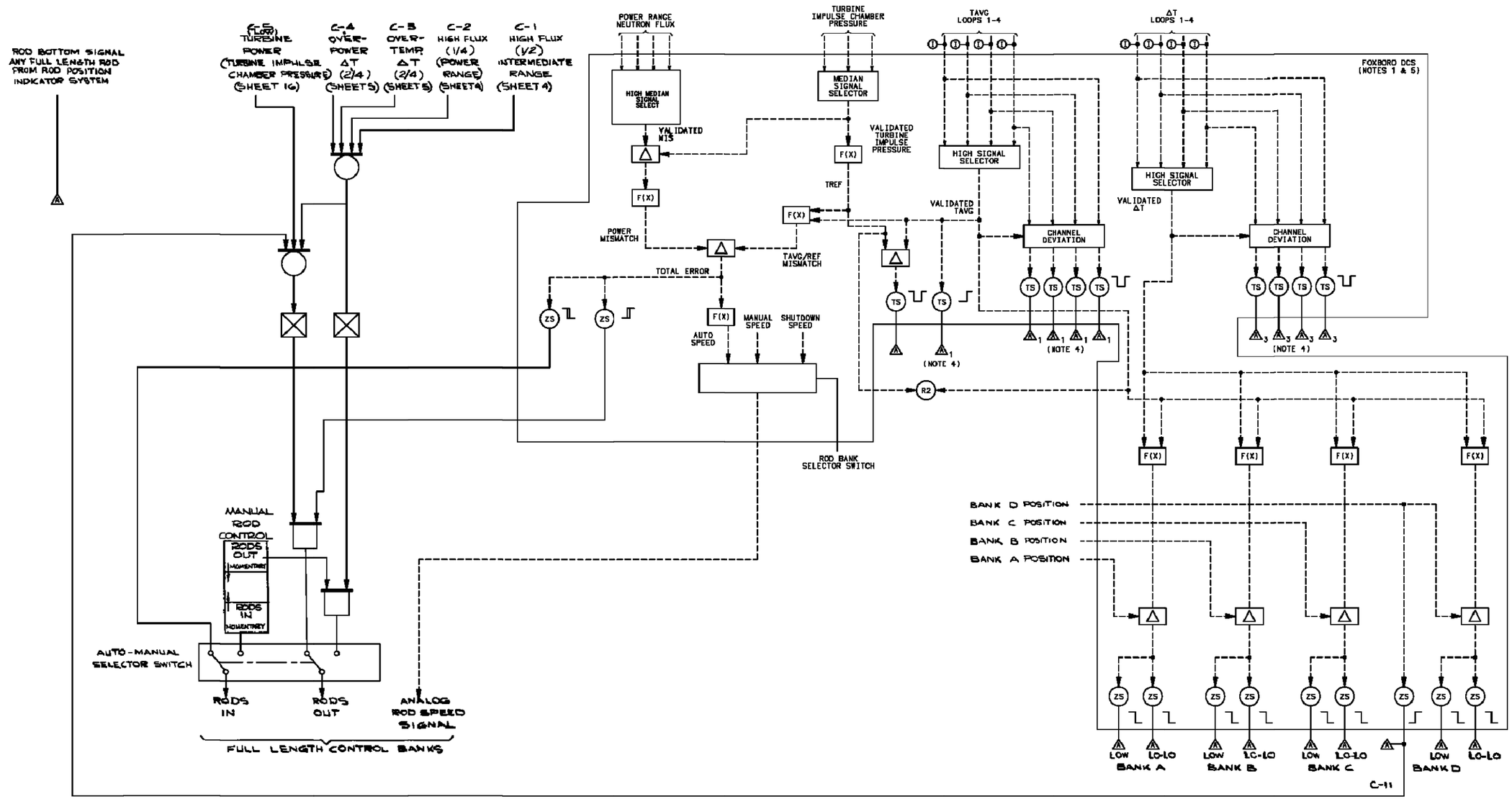

NOTES-

1 FOXBORO DCS CIRCUITS ARE FAULT TOLERANT AND REDUNDANT OTHER CIRCUITS ARE NOT REDUNDANT
2 NOT USED
3 NOT USED
4 ALARM 1 AND ALARM 3 MUST HAVE REFLASH CAPABILITY
5 REFER TO TVA DRAWING 1.2-47W611-98-1 FOR DCS FUNCTION DIAGRAM DRAWING REFERENCES

SEQUOYAH NUCLEAR PLANT
FINAL SAFETY ANALYSIS REPORT

FIGURE 7.2.1-1 SHEET 9

FUNCTIONAL DIAGRAMS-ROD CONTROLS & ROD BLOCKS
(REVISED BY AMENDMENT 29)

CAD MAINTAINED DRAWING

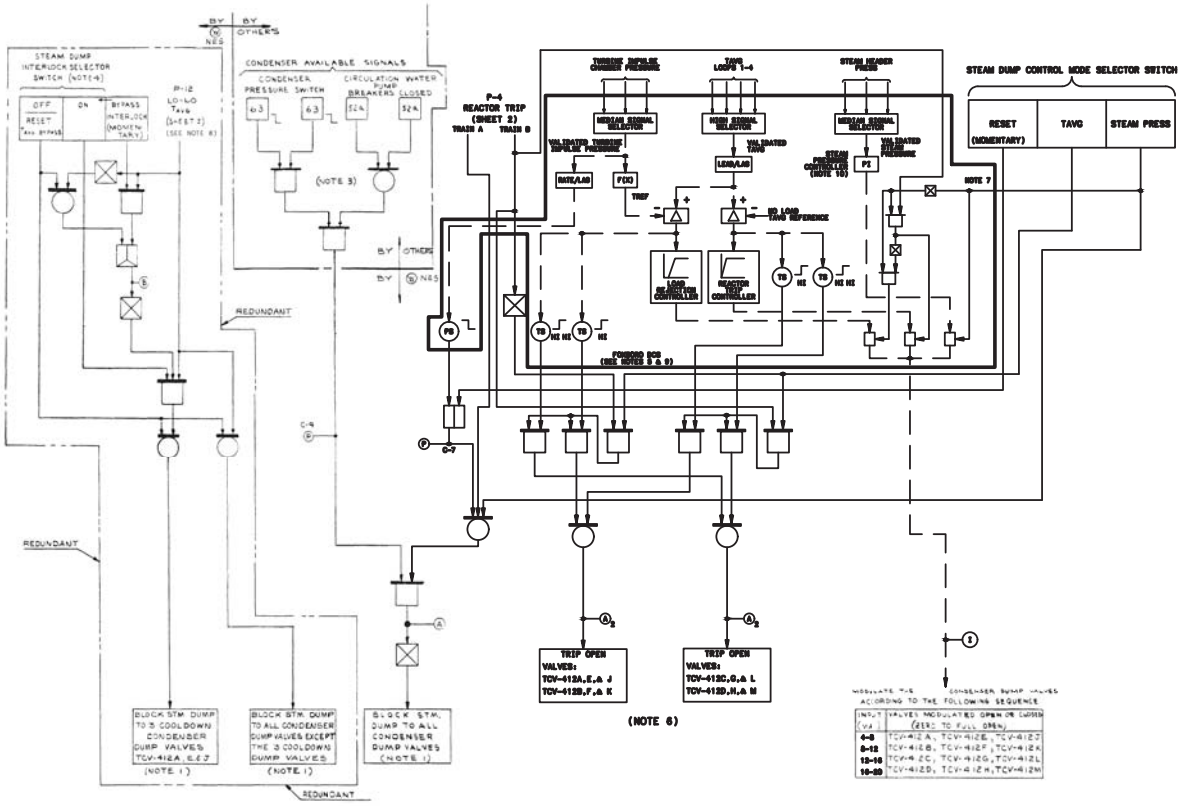

1. STEAM DUMP IS BLOCKED BY BLOCKING AIR TO THE DUMP VALVES AND VENTING THE DIAPHRAGMS. THE REDUNDANT LOGIC OUTPUT OPERATES TWO SOLENOID VENT VALVES IN SERIES TO REDUNDANTLY INTERLOCK THE AIR LINE BETWEEN EACH VALVE DIAPHRAGM AND ITS ASSOCIATED POSITIONER. THE NON-REDUNDANT LOGIC OUTPUT OPERATES ONE SOLENOID VENT VALVE TO INTERLOCK THE AIR LINE BETWEEN EACH VALVE DIAPHRAGM AND ITS ASSOCIATED POSITIONER. THE SOLENOID VALVES ARE DE-ENERGIZE TO VENT CAUSING THE MAIN DUMP VALVE TO CLOSE IN FIVE SECONDS. EITHER OF THE TWO REDUNDANT BLOCK SIGNALS OR THE NON-REDUNDANT BLOCK SIGNAL WILL BLOCK STEAM DUMP INDEPENDENT OF THE OTHERS.

2. CIRCUITRY ON THIS SHEET IS NOT REDUNDANT EXCEPT WHERE INDICATED REDUNDANT.

3. THE CONDENSER AVAILABLE SIGNAL LOGIC IS TYPICAL. ACTUAL IMPLEMENTATION MAY BE DIFFERENT.

4. SELECTOR SWITCH WITH THE FOLLOWING 3 POSITIONS
   ON -STEAM DUMP IS PERMITTED
   BYPASS -T AVG INTERLOCK IS BYPASSED FOR LO-LO T AVG SPRING RETURN TO ON POSITION.
   OFF -STEAM DUMP IS NOT PERMITTED AND RESET T AVG BYPASS.

5. FOXBORO DCS CIRCUITS ARE FAULT TOLERANT AND REDUNDANT. THE SOFTWARE USED TO DEVELOP THE LOSS OF LOAD SIGNAL AND THE STEAM DUMP DEMAND SIGNAL MUST BE ON SEPARATE, INDEPENDENT PROCESSOR PAIRS.

6. LIGHTS SHOULD BE PROVIDED IN THE CONTROL ROOM FOR EACH DUMP VALVE TO INDICATE WHEN THE VALVE IS FULLY CLOSED OR FULLY OPEN.

7. ONLY THE STEAM PRESS CONTACT OF THE STEAM DUMP CONTROL MODE SELECTOR SWITCH IS AN INPUT INTO DCS. DCS USES THE STATUS OF THE STEAM PRESS CONTACT INPUT TO DEDUCE THE STATE OF THE SWITCH (EITHER STEAM PRESS OR TAVG/RESET).

8. SEE NOTE 7 ON LOGIC DRAWING 1,2-47B011-1-2.

9. REFER TO TVA DRAWING 1,2-47B011-90-1 FOR DCS FUNCTIONAL DIAGRAM DRAWING REFERENCES.

10. PROPORTIONAL+INTEGRAL (PI) CONTROLLER LOGIC IS INTERNAL TO FOXBORO DCS. REMOTE CONTROLLER SETPOINT AND MANUAL DEMAND SIGNALS ARE PROVIDED FROM ASSOCIATED MAIN CONTROL ROOM HANDSTATION.

SEQUOYAH NUCLEAR PLANT
FINAL SAFETY
ANALYSIS REPORT

FIGURE 7.2.1-1 SHEET 10

FUNCTIONAL DIAGRAMS-STEAM DUMP CONTROL

(REVISED BY AMENDMENT 28)

CAD MAINTAINED DRAWING

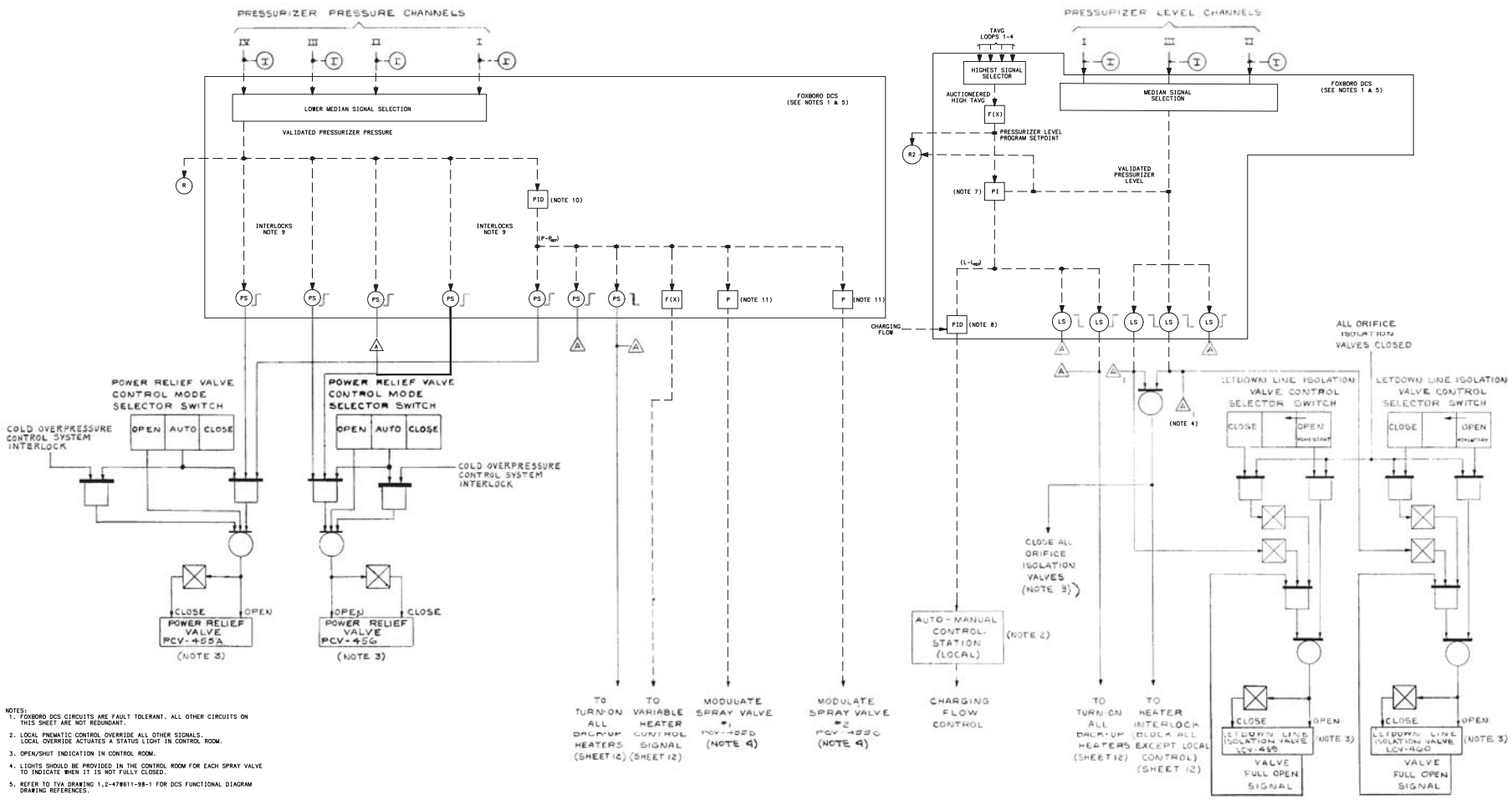

NOTES:

1. FOXBORO DCS CIRCUITS ARE FAULT TOLERANT. ALL OTHER CIRCUITS ON THIS SHEET ARE NOT REDUNDANT.
2. LOCAL PNEMATIC CONTROL OVERRIDE ALL OTHER SIGNALS. LOCAL OVERRIDE ACTUATES A STATUS LIGHT IN CONTROL ROOM.
3. OPEN/SHUT INDICATION IN CONTROL ROOM.
4. LIGHTS SHOULD BE PROVIDED IN THE CONTROL ROOM FOR EACH SPRAY VALVE TO INDICATE WHEN IT IS NOT FULLY CLOSED.
5. REFER TO TVA DRAWING 1,2-47W611-98-1 FOR DCS FUNCTIONAL DIAGRAM DRAWING REFERENCES.
6. LOW-LOW PRESSURIZER LEVEL INTERLOCK IS DEVELOPED ACROSS TWO FOXBORO DCS CONTROL GROUPS SUCH THAT EITHER GROUP CAN CAUSE A LETDOWN ISOLATION AND TURN THE PRESSURIZER HEATERS OFF.
7. PROPORTIONAL+INTEGRAL (PI) CONTROLLER LOGIC IS INTERNAL TO FOXBORO DCS. CONTROLLER MANUAL DEMAND SIGNALS ARE PROVIDED FROM ASSOCIATED MAIN CONTROL ROOM HANDSTATION.
8. PROPORTIONAL+INTEGRAL+DERIVITIVE (PID) CONTROLLER LOGIC IS INTERNAL TO FOXBORO DCS. CONTROLLER MANUAL DEMAND SIGNALS ARE PROVIDED FROM ASSOCIATED MAIN CONTROL ROOM HANDSTATION.
9. PORV OPEN INTERLOCK REQUIRES 2/2 WI PRESSURE SIGNALS-ONE FROM EACH INDEPENDENT DCS PROCESSOR CONTROL GROUP.
10. PROPORTIONAL+INTEGRAL+DERIVITIVE (PID) CONTROLLER LOGIC IS INTERNAL TO FOXBORO DCS. REMOTE CONTROLLER SETPOINT AND MANUAL DEMAND SIGNALS ARE PROVIDED FROM ASSOCIATED MAIN CONTROL ROOM HANDSTATION.
11. PROPORTIONAL (P) CONTROLLER LOGIC IS INTERNAL TO FOXBORO DCS. CONTROLLER MANUAL DEMAND SIGNALS ARE PROVIDED FROM ASSOCIATED MAIN CONTROL ROOM HANDSTATION.

SEQUOYAH NUCLEAR PLANT
FINAL SAFETY
ANALYSIS REPORT

FIGURE 7.2.1-1 SHEET 11

FUNCTIONAL DIAGRAMS-PRESSURIZER PRESSURE & LEVEL CONTROL
(REVISED BY AMENDMENT 28)

CAD MAINTAINED DRAWING

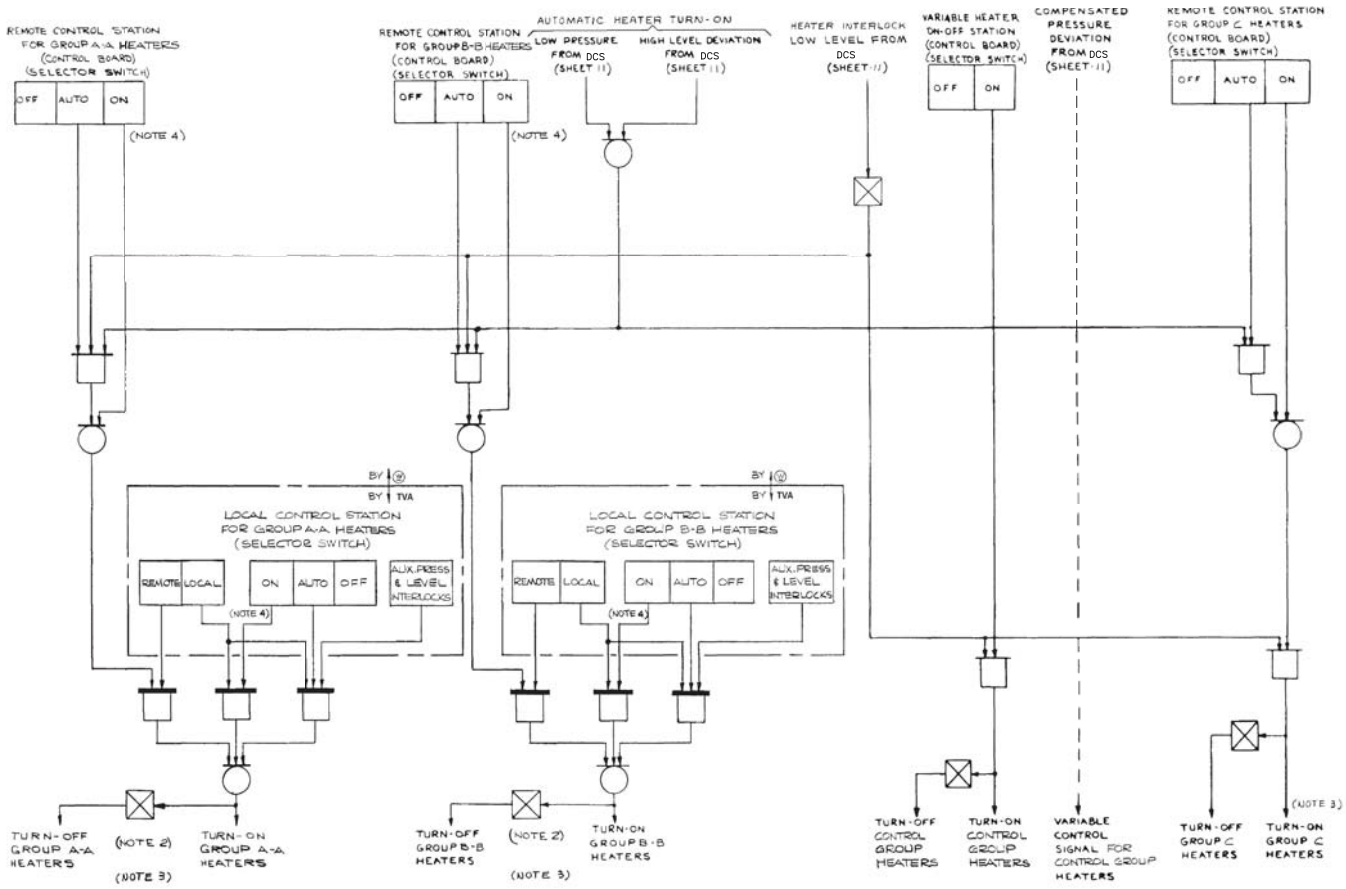

NOTES

1. ALL CIRCUITS ON THIS SHEET ARE NOT REDUNDANT.
2. GROUP A-A AND GROUP B-B HEATERS MUST BE ON SEPARATE VITAL POWER SUPPLIES WITH THE LOCAL CONTROL SEPARATED SO THAT ANY SINGLE FAILURE DOES NOT DEFEAT BOTH.
3. BACKUP HEATER STATUS INDICATION IN CONTROL ROOM.
4. PRECAUTIONS SHOULD BE TAKEN TO AVOID MANUAL HEATER OPERATION, WHICH WOULD CAUSE HEATER DAMAGE, IF THE WATER LEVEL UNCOVERS THE HEATERS.

SEQUOYAH NUCLEAR PLANT
FINAL SAFETY
ANALYSIS REPORT

FIGURE 7.2.1-1 SHEET 12

FUNCTIONAL DIAGRAMS-PRESSURIZER HEATER CONTROL
(REVISED BY AMENDMENT 28)

CAD MAINTAINED DRAWING

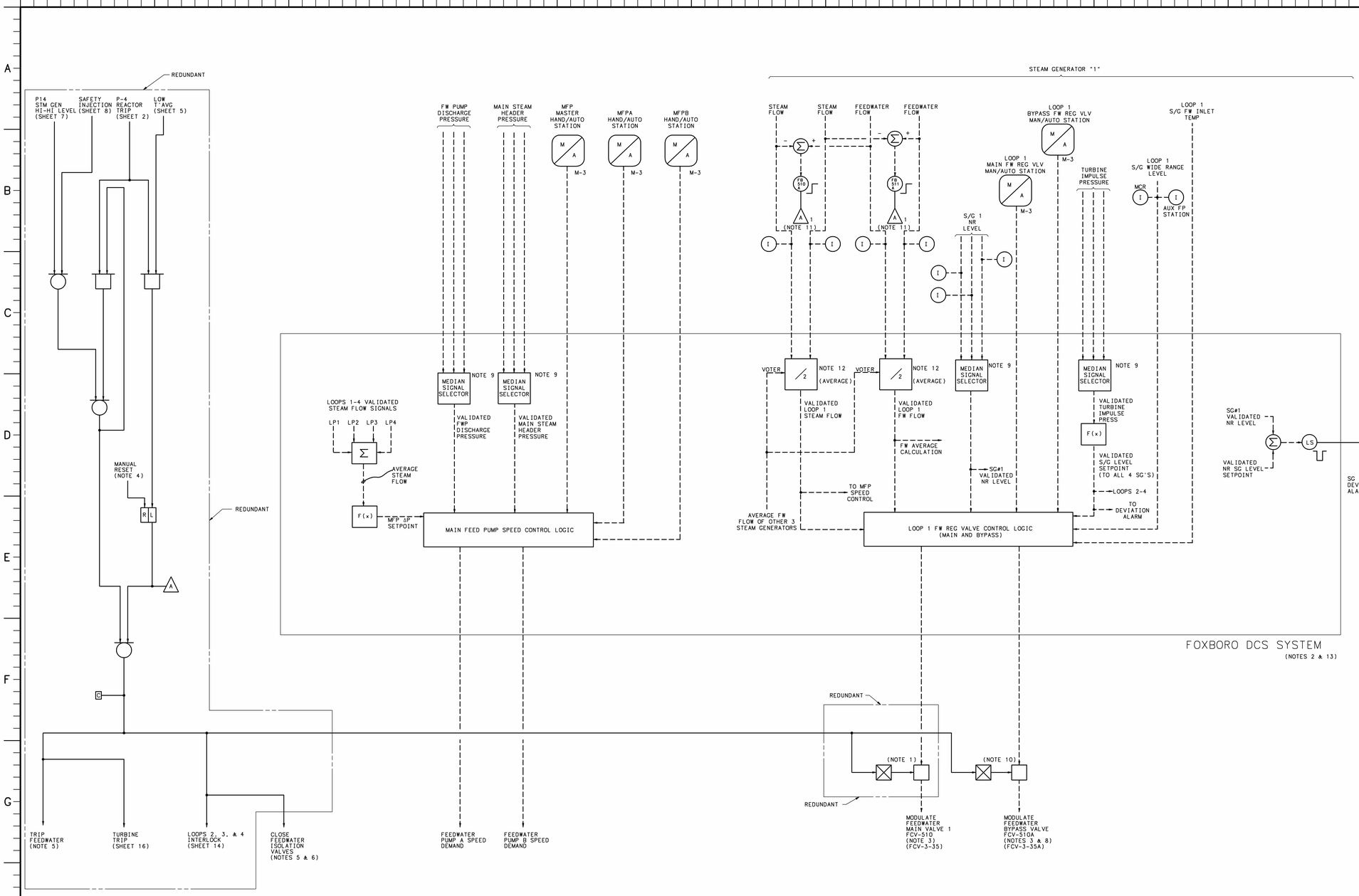

NOTES:

1. ANALOG GATE CONSISTS OF 2 SOLENOID ASSEMBLIES IN SERIES TO REDUNDANTLY INTERLOCK THE AIR LINE BETWEEN EACH VALVE DIAPHRAGM AND ITS ASSOCIATED POSITIONER. EACH ASSEMBLY CONTAINS TWO SOLENOID VALVES POWERED FROM DIFFERENT POWER SUPPLIES. EACH DC SUPPLY POWERS TWO SOLENOIDS. BUT FOR DIFFERENT ASSEMBLIES AS SHOWN IN THE LOGIC. ONE OF TWO SOLENOIDS WITHIN EACH ASSEMBLY IS REQUIRED FOR MAIN FEEDWATER VALVE MODULATION. BOTH SOLENOIDS WITHIN AN ASSEMBLY ARE REQUIRED FOR VENTING AND MAIN FEEDWATER VALVE CLOSURE. THE SOLENOID VALVES ARE DE-ENERGIZE TO VENT, CAUSING THE MAIN FEEDWATER VALVE TO CLOSE IN 7 SECONDS. SEE 1,2-45N603-1.
2. FOXBORO DCS CIRCUITS ARE FAULT TOLERANT AND REDUNDANT. OTHER CIRCUITS ARE NOT REDUNDANT EXCEPT WHERE INDICATED "REDUNDANT".
3. OPEN/SHUT INDICATION FOR EACH FEEDWATER VALVE IN CONTROL ROOM.
4. THE REDUNDANT MANUAL RESET CONSISTS OF TWO MOMENTARY CONTROLS ON THE CONTROL BOARD, ONE FOR EACH TRAIN.
5. BY OTHERS.
6. TRAIN A CLOSES VALVES NUMBER FCV-3-33 AND FCV-3-87 FOR STEAM GENERATORS 1 AND 3. . TRAIN B CLOSES VALVES NUMBER FCV-3-47 AND FCV-3-100 FOR STEAM GENERATORS 2 AND 4.
7. NOT USED
8. TRAIN B CLOSES BYPASS VALVE NUMBER FCV-510A FOR STEAM GENERATOR 1.
9. THE STEAM GENERATOR NARROW RANGE LEVEL SIGNAL USED FOR FEEDWATER CONTROL IS THE MEDIAN (MIDDLE) SIGNAL FOR THE THREE LEVEL CHANNELS. UPON FAILURE OF ONE STEAM GENERATOR NARROW RANGE LEVEL CHANNEL, THE AVERAGE OF THE REMAINING TWO OPERABLE CHANNELS IS USED FOR CONTROL. THIS FUNCTION IS SIMILAR FOR FW PUMP DISCHARGE PRESSURE, MAIN STEAM HEADER PRESSURE, AND TURBINE IMPULSE PRESSURE SIGNALS.
10. ANALOG GATE CONSISTS OF ONE SOLENOID VENT VALVE CONTROLLED BY ONE TRAIN TO INTERLOCK THE AIR LINE BETWEEN EACH VALVE DIAPHRAGM AND ITS ASSOCIATED POSITIONER. THE SOLENOID VALVE IS DE-ENERGIZE TO VENT, CAUSING THE BYPASS FEEDWATER VALVE TO CLOSE IN 5 SECONDS.
11. ALARM 1 AND ALARM 2 MUST HAVE REFLASH CAPABILITY. ALARMS 1 AND 2 ON THIS SHEET SHARE THE SAME RESPECTIVE COMMON ANNUNCIATOR WINDOWS WITH ALARMS 1 AND 2 ON SHEET 14.
12. STEAM FLOW AND FW FLOWS UTILIZE THE AVERAGE SIGNAL FOR CONTROL. UPON FAILURE OF ONE FW OR SF SIGNAL, THE VOTER SIGNAL SELECTS THE CLOSEST SIGNAL TO THE VOTER FOR CONTROL.
13. REFER TO TVA DRAWING 47W611-98-1 FOR FUNCTIONAL DIAGRAM DRAWING REFERENCES.
14. SEE SHEET 14 FOR LOOPS 2-4.

SEQUOYAH NUCLEAR PLANT
FINAL SAFETY
ANALYSIS REPORT

FIGURE 7.2.1-1 SHEET 13
(REVISED BY AMENDMENT 23)

SCALE: NONE — EXCEPT AS NOTED

POWERHOUSE
UNITS 1 AND 2

FUNCTIONAL DIAGRAMS FEEDWATER CONTROL & ISLN

SEQUOYAH NUCLEAR PLANT
TENNESSEE VALLEY AUTHORITY

INITIAL ISSUE	ENGINEERING APPROVAL	
RO ISSUE PER: DRAWING CREATED FROM DCA M02034-291 R0 PER DCN M02034A. AND CONTRACT NO. 89NNP-75380A.	1	D.G. ROOP
	2	D.M. DEAN
	3	H.L. SUTTON

CONTRACT NO. 75380A

CCD | ISSUED DATE 1-18-91 | 45 | E | 1,2-5655D26-13 | R2

CAD MAINTAINED DRAWING

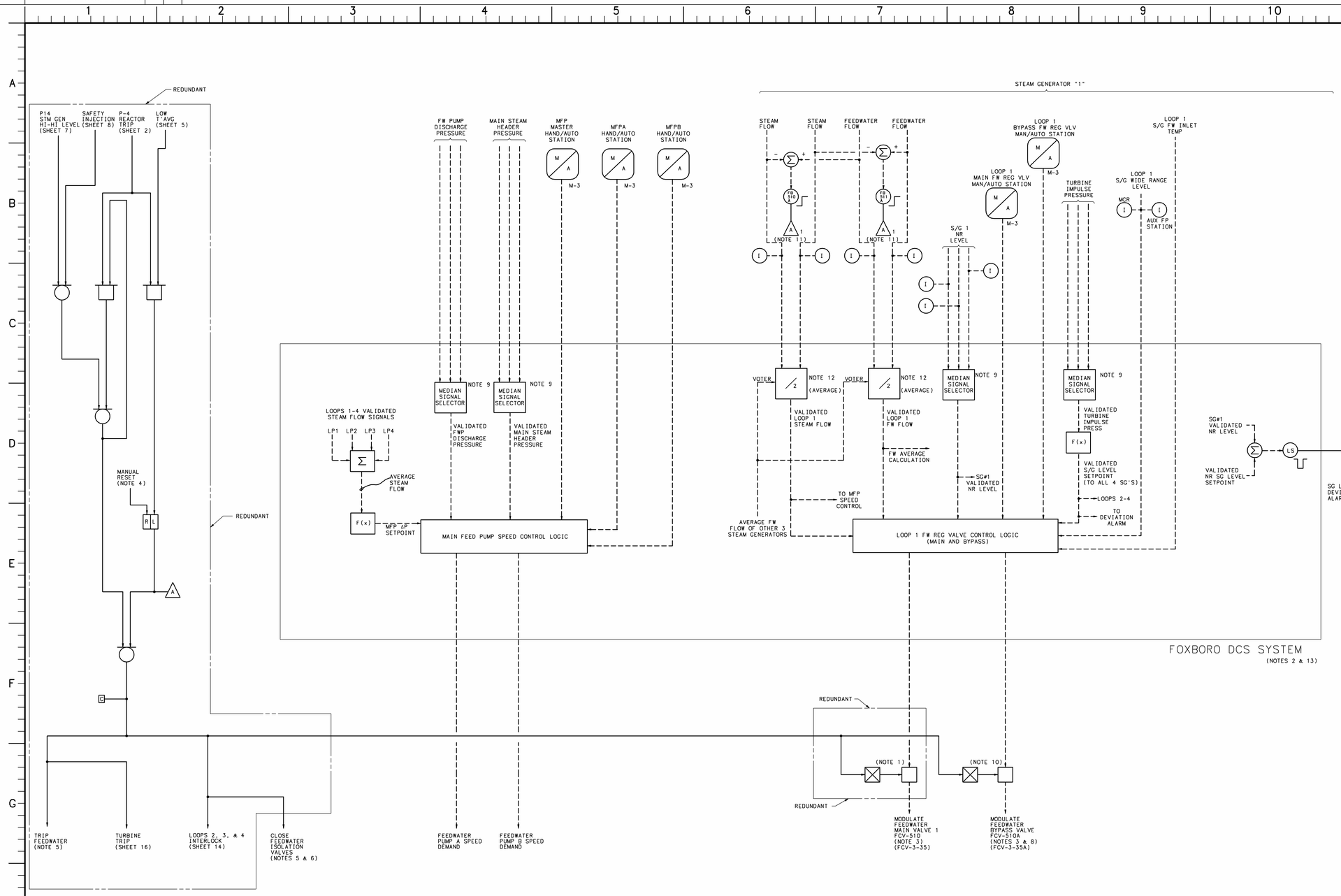

NOTES:

1. ANALOG GATE CONSISTS OF 2 SOLENOID ASSEMBLIES IN SERIES TO REDUNDANTLY INTERLOCK THE AIR LINE BETWEEN EACH VALVE DIAPHRAGM AND ITS ASSOCIATED POSITIONER. EACH ASSEMBLY CONTAINS TWO SOLENOID VALVES POWERED FROM DIFFERENT POWER SUPPLIES. EACH DC SUPPLY POWERS TWO SOLENOIDS. BUT FOR DIFFERENT ASSEMBLIES AS SHOWN IN THE LOGIC. ONE OF TWO SOLENOIDS WITHIN EACH ASSEMBLY IS REQUIRED FOR MAIN FEEDWATER VALVE MODULATION. BOTH SOLENOIDS WITHIN AN ASSEMBLY ARE REQUIRED FOR VENTING AND MAIN FEEDWATER VALVE CLOSURE. THE SOLENOID VALVES ARE DE-ENERGIZE TO VENT, CAUSING THE MAIN FEEDWATER VALVE TO CLOSE IN 7 SECONDS. SEE 1,2-45N603-1.
2. FOXBORO DCS CIRCUITS ARE FAULT TOLERANT AND REDUNDANT, OTHER CIRCUITS ARE NOT REDUNDANT EXCEPT WHERE INDICATED "REDUNDANT".
3. OPEN/SHUT INDICATION FOR EACH FEEDWATER VALVE IN CONTROL ROOM.
4. THE REDUNDANT MANUAL RESET CONSISTS OF TWO MOMENTARY CONTROLS ON THE CONTROL BOARD, ONE FOR EACH TRAIN.
5. BY OTHERS.
6. TRAIN A CLOSES VALVES NUMBER FCV-3-33 AND FCV-3-87 FOR STEAM GENERATORS 1 AND 3. . TRAIN B CLOSES VALVES NUMBER FCV-3-47 AND FCV-3-100 FOR STEAM GENERATORS 2 AND 4.
7. NOT USED
8. TRAIN B CLOSES BYPASS VALVE NUMBER FCV-510A FOR STEAM GENERATOR 1.
9. THE STEAM GENERATOR NARROW RANGE LEVEL SIGNAL USED FOR FEEDWATER CONTROL IS THE MEDIAN (MIDDLE) SIGNAL FOR THE THREE LEVEL CHANNELS. UPON FAILURE OF ONE STEAM GENERATOR NARROW RANGE LEVEL CHANNEL, THE AVERAGE OF THE REMAINING TWO OPERABLE CHANNELS IS USED FOR CONTROL. THIS FUNCTION IS SIMILAR FOR FW PUMP DISCHARGE PRESSURE, MAIN STEAM HEADER PRESSURE, AND TURBINE IMPULSE PRESSURE SIGNALS.
10. ANALOG GATE CONSISTS OF ONE SOLENOID VENT VALVE CONTROLLED BY ONE TRAIN TO INTERLOCK THE AIR LINE BETWEEN EACH VALVE DIAPHRAGM AND ITS ASSOCIATED POSITIONER. THE SOLENOID VALVE IS DE-ENERGIZE TO VENT, CAUSING THE BYPASS FEEDWATER VALVE TO CLOSE IN 5 SECONDS.
11. ALARM 1 AND ALARM 2 MUST HAVE REFLASH CAPABILITY. ALARMS 1 AND 2 ON THIS SHEET SHARE THE SAME RESPECTIVE COMMON ANNUNCIATOR WINDOWS WITH ALARMS 1 AND 2 ON SHEET 14.
12. STEAM FLOW AND FW FLOWS UTILIZE THE AVERAGE SIGNAL FOR CONTROL. UPON FAILURE OF ONE FW OR SF SIGNAL, THE VOTER SIGNAL SELECTS THE CLOSEST SIGNAL TO THE VOTER FOR CONTROL.
13. REFER TO TVA DRAWING 47W611-98-1 FOR FUNCTIONAL DIAGRAM DRAWING REFERENCES.
14. SEE SHEET 14 FOR LOOPS 2-4.

SEQUOYAH NUCLEAR PLANT
FINAL SAFETY
ANALYSIS REPORT

FIGURE 7.2.1-1 SHEET 13A
(REVISED BY AMENDMENT 22)

SCALE: NONE — EXCEPT AS NOTED

POWERHOUSE
UNIT 2

FUNCTIONAL DIAGRAMS FEEDWATER CONTROL & ISLN

SEQUOYAH NUCLEAR PLANT
TENNESSEE VALLEY AUTHORITY

INITIAL ISSUE	ENGINEERING APPROVAL	
R0 ISSUE PER: DRAWING CREATED FROM DCA M02034-291 R0 PER DCN M02034A. AND CONTRACT NO. 89NNP-75380A.	1	D.G. ROOP
	2	D.M. DEAN
	3	H.L. SUTTON

CONTRACT NO. 75380A

CCD | ISSUED DATE 1-18-91 | 45 | E | 2-5655D26-13 | R2

CAD MAINTAINED DRAWING

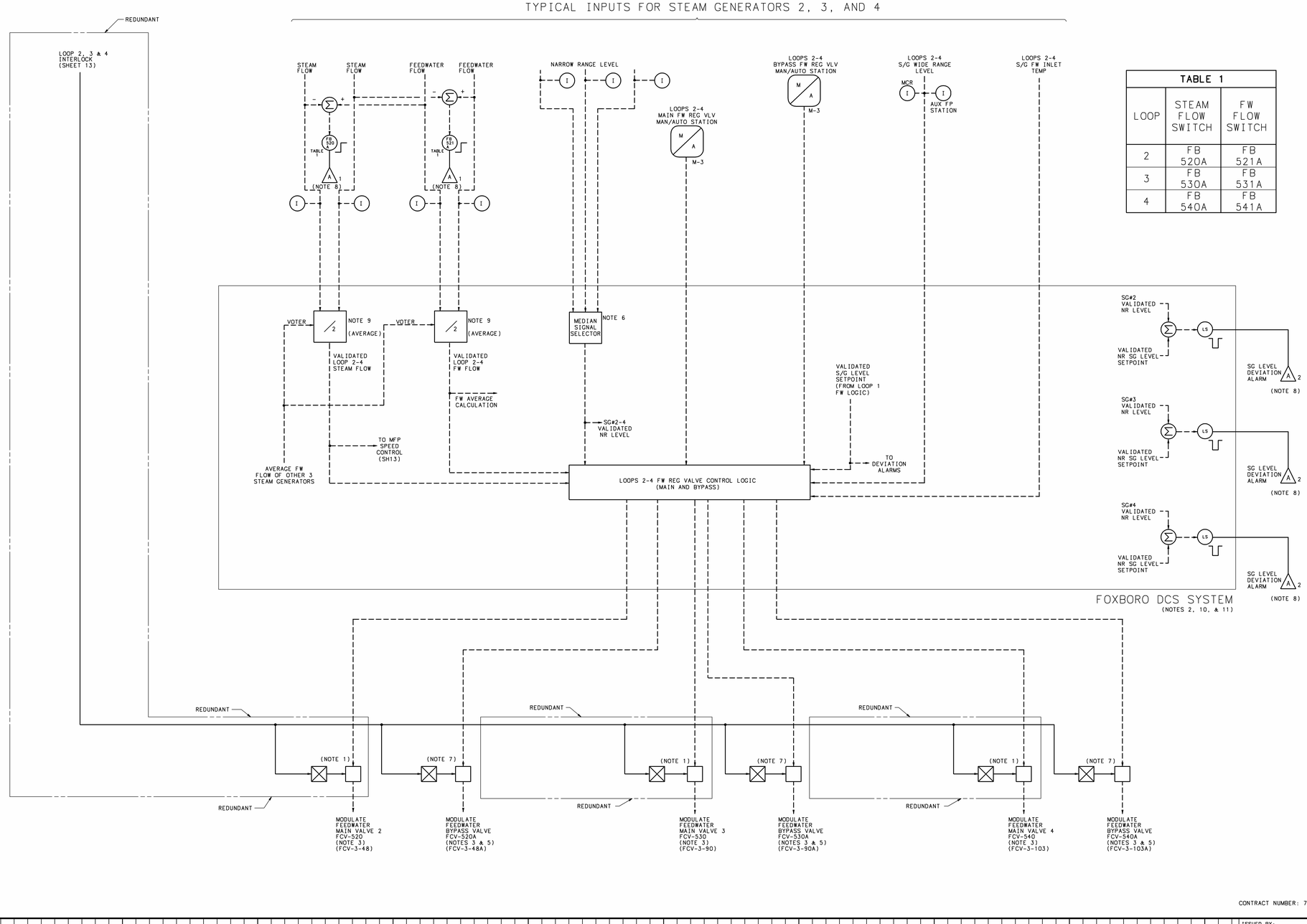

TABLE 1		
LOOP	STEAM FLOW SWITCH	FW FLOW SWITCH
2	FB 520A	FB 521A
3	FB 530A	FB 531A
4	FB 540A	FB 541A

NOTES:

1. ANALOG GATE CONSISTS OF TWO SOLENOID ASSEMBLIES IN SERIES TO REDUNDANTLY INTERLOCK THE AIR LINE BETWEEN EACH VALVE DIAPHRAGM AND ITS ASSOCIATED POSITIONER. EACH ASSEMBLY CONTAINS TWO SOLENOID VALVES POWERED FROM DIFFERENT POWER SUPPLIES. EACH DC SUPPLY POWERS TWO SOLENOIDS, BUT FOR DIFFERENT ASSEMBLIES AS SHOWN IN THE LOGIC. ONE OF TWO SOLENOIDS WITHIN EACH ASSEMBLY IS REQUIRED FOR MAIN FEEDWATER VALVE MODULATION. BOTH SOLENOIDS WITHIN AN ASSEMBLY ARE REQUIRED FOR VENTING AND MAIN FEEDWATER VALVE CLOSURE. THE SOLENOID VALVES ARE DE-ENERGIZE TO VENT, CAUSING THE MAIN FEEDWATER VALVE TO CLOSE IN SEVEN SECONDS. SEE 1,2-45N603-1.
2. CIRCUITS INSIDE FOXBORO DCS ARE FAULT TOLERANT AND REDUNDANT. THE DCS CIRCUITS ARE TYPICAL IN CONTROL GROUPS 2 - 4 ON THIS DRAWING. OTHER CIRCUITS ARE NOT REDUNDANT EXCEPT WHERE INDICATED.
3. OPEN/SHUT INDICATION FOR EACH FEEDWATER MAIN VALVE IN CONTROL ROOM.
4. NOT USED
5. TRAIN B CLOSES BYPASS VALVE NUMBER FCV-530A FOR STEAM GENERATOR 3. TRAIN A CLOSES BYPASS VALVE NUMBER FCV-520A FOR STEAM GENERATOR 2, AND FCV-540A FOR STEAM GENERATOR 4.
6. THE STEAM GENERATOR NARROW RANGE LEVEL SIGNAL USED FOR FEEDWATER CONTROL IS THE MEDIAN (MIDDLE) SIGNAL FOR THE THREE LEVEL CHANNELS. UPON FAILURE OF ONE STEAM GENERATOR NARROW RANGE LEVEL CHANNEL, THE AVERAGE OF THE REMAINING TWO OPERABLE CHANNELS IS USED FOR CONTROL. THIS FUNCTION IS SIMILAR FOR FW PUMP DISCHARGE PRESSURE, MAIN STEAM HEADER PRESSURE, AND TURBINE IMPULSE PRESSURE SIGNALS.
7. ANALOG GATE CONSISTS OF ONE SOLENOID VENT VALVE CONTROLLED BY ONE TRAIN TO INTERLOCK THE AIR LINE BETWEEN EACH VALVE DIAPHRAGM AND ITS ASSOCIATED POSITIONER. THE SOLENOID VALVE IS DE-ENERGIZE TO VENT, CAUSING THE BYPASS FEEDWATER VALVE TO CLOSE IN 5 SECONDS.
8. ALARM 1 AND ALARM 2 MUST HAVE REFLASH CAPABILITY. ALARMS 1 AND 2 ON THIS SHEET SHARE THE SAME RESPECTIVE COMMON ANNUNCIATOR WINDOWS WITH ALARMS 1 AND 2 ON SHEET 13.
9. STEAM FLOW AND FW FLOW UTILIZE THE AVERAGE SIGNAL FOR CONTROL. UPON FAILURE OF ONE FW OR SF SIGNAL, THE VOTER SIGNAL SELECTS THE CLOSEST SIGNAL TO THE VOTER FOR CONTROL.
10. LOOP 2 REPRESENTED FOR FOXBORO DIGITAL CONTROL SYSTEM EXCEPT AS SHOWN. LOOPS 3 AND 4 SIMILAR.
11. REFER TO TVA DRAWING 47W611-98-1 FOR FUNCTIONAL DIAGRAM REFERENCES.
12. SEE SHEET 13 FOR LOOP 1.

SEQUOYAH NUCLEAR PLANT
FINAL SAFETY
ANALYSIS REPORT

FIGURE 7.2.1-1 SHEET 14
(REVISED BY AMENDMENT 23)

SCALE: NONE — EXCEPT AS NOTED

UNITS 1 AND 2

FUNCTIONAL DIAGRAMS FEEDWATER CONTROL & ISLN

SEQUOYAH NUCLEAR PLANT
TENNESSEE VALLEY AUTHORITY

DESIGN		INITIAL ISSUE	ENGINEERING APPROVAL
DRAFTER: D.G.ROOP	CHECKER: SEE RO	RO ISSUE PER: DCN M02034A INC DCA-M2034-292 RO THIS DWG CREATED FROM AND SUPERSEDES DRAWING 1,2-5655D26-14 R0 (CONTRACT 91934)	1 N/A
DESIGNER: N/A	REVIEWER: N/A		2 SEE RO
			3 SEE RO
DATE 7-1-91	45 M	CCD NO:1,2-5655D26-14	R2

CONTRACT NUMBER: 75380A

ISSUED BY: N/A

CAD MAINTAINED DRAWING

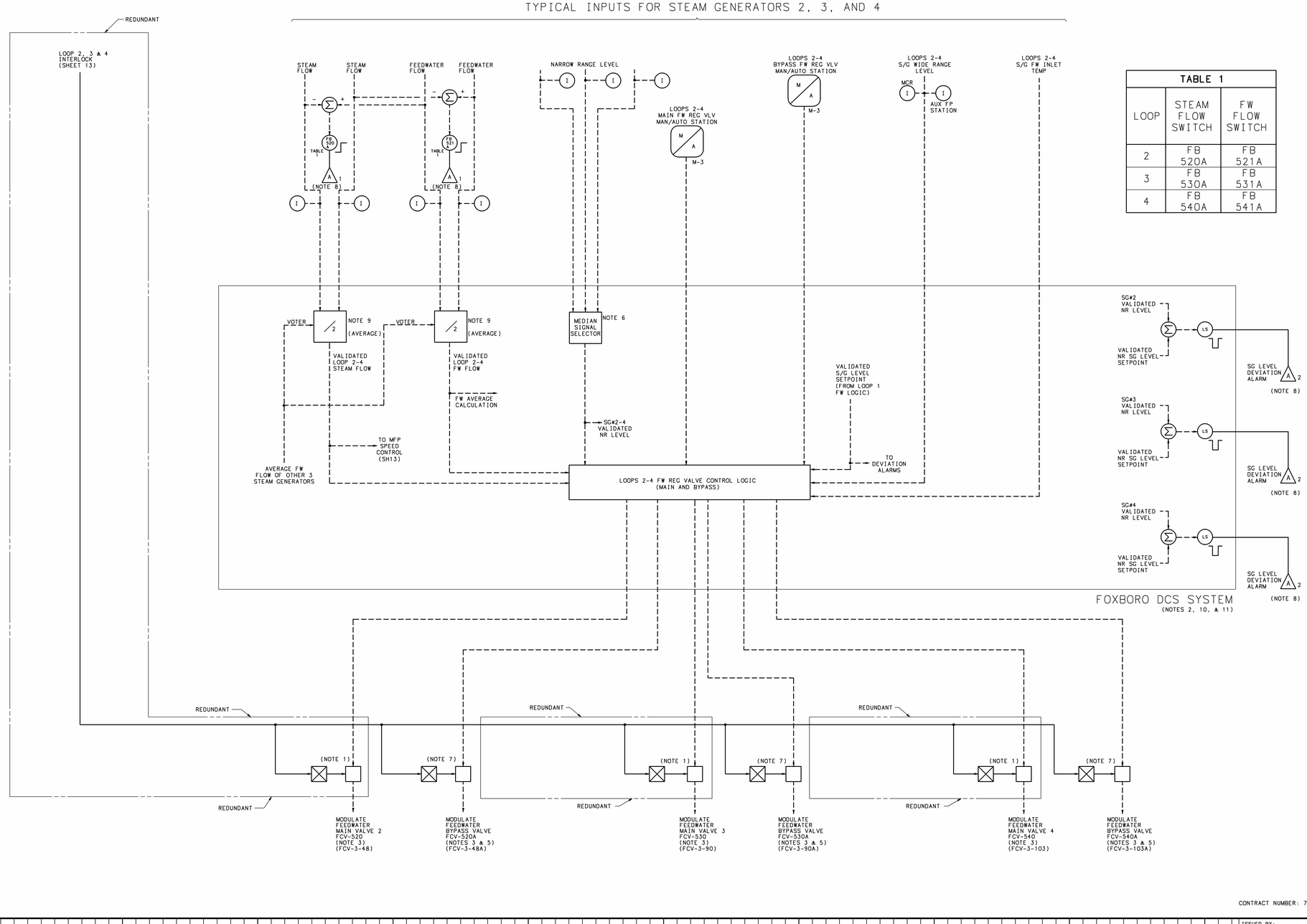

TABLE 1		
LOOP	STEAM FLOW SWITCH	FW FLOW SWITCH
2	FB 520A	FB 521A
3	FB 530A	FB 531A
4	FB 540A	FB 541A

NOTES:

1. ANALOG GATE CONSISTS OF TWO SOLENOID ASSEMBLIES IN SERIES TO REDUNDANTLY INTERLOCK THE AIR LINE BETWEEN EACH VALVE DIAPHRAGM AND ITS ASSOCIATED POSITIONER. EACH ASSEMBLY CONTAINS TWO SOLENOID VALVES POWERED FROM DIFFERENT POWER SUPPLIES. EACH DC SUPPLY POWERS TWO SOLENOIDS, BUT FOR DIFFERENT ASSEMBLIES AS SHOWN IN THE LOGIC. ONE OF TWO SOLENOIDS WITHIN EACH ASSEMBLY IS REQUIRED FOR MAIN FEEDWATER VALVE MODULATION. BOTH SOLENOIDS WITHIN AN ASSEMBLY ARE REQUIRED FOR VENTING AND MAIN FEEDWATER VALVE CLOSURE. THE SOLENOID VALVES ARE DE-ENERGIZE TO VENT, CAUSING THE MAIN FEEDWATER VALVE TO CLOSE IN SEVEN SECONDS. SEE 1,2-45N603-1.
2. CIRCUITS INSIDE FOXBORO DCS ARE FAULT TOLERANT AND REDUNDANT. THE DCS CIRCUITS ARE TYPICAL IN CONTROL GROUPS 2 - 4 ON THIS DRAWING. OTHER CIRCUITS ARE NOT REDUNDANT EXCEPT WHERE INDICATED.
3. OPEN/SHUT INDICATION FOR EACH FEEDWATER MAIN VALVE IN CONTROL ROOM.
4. NOT USED
5. TRAIN B CLOSES BYPASS VALVE NUMBER FCV-530A FOR STEAM GENERATOR 3. TRAIN A CLOSES BYPASS VALVE NUMBER FCV-520A FOR STEAM GENERATOR 2, AND FCV-540A FOR STEAM GENERATOR 4.
6. THE STEAM GENERATOR NARROW RANGE LEVEL SIGNAL USED FOR FEEDWATER CONTROL IS THE MEDIAN (MIDDLE) SIGNAL FOR THE THREE LEVEL CHANNELS. UPON FAILURE OF ONE STEAM GENERATOR NARROW RANGE LEVEL CHANNEL, THE AVERAGE OF THE REMAINING TWO OPERABLE CHANNELS IS USED FOR CONTROL. THIS FUNCTION IS SIMILAR FOR FW PUMP DISCHARGE PRESSURE, MAIN STEAM HEADER PRESSURE, AND TURBINE IMPULSE PRESSURE SIGNALS.
7. ANALOG GATE CONSISTS OF ONE SOLENOID VENT VALVE CONTROLLED BY ONE TRAIN TO INTERLOCK THE AIR LINE BETWEEN EACH VALVE DIAPHRAGM AND ITS ASSOCIATED POSITIONER. THE SOLENOID VALVE IS DE-ENERGIZE TO VENT, CAUSING THE BYPASS FEEDWATER VALVE TO CLOSE IN 5 SECONDS.
8. ALARM 1 AND ALARM 2 MUST HAVE REFLASH CAPABILITY. ALARMS 1 AND 2 ON THIS SHEET SHARE THE SAME RESPECTIVE COMMON ANNUNCIATOR WINDOWS WITH ALARMS 1 AND 2 ON SHEET 13.
9. STEAM FLOW AND FW FLOW UTILIZE THE AVERAGE SIGNAL FOR CONTROL. UPON FAILURE OF ONE FW OR SF SIGNAL, THE VOTER SIGNAL SELECTS THE CLOSEST SIGNAL TO THE VOTER FOR CONTROL.
10. LOOP 2 REPRESENTED FOR FOXBORO DIGITAL CONTROL SYSTEM EXCEPT AS SHOWN. LOOPS 3 AND 4 SIMILAR.
11. REFER TO TVA DRAWING 47W611-98-1 FOR FUNCTIONAL DIAGRAM REFERENCES.
12. SEE SHEET 13 FOR LOOP 1.

CONTRACT NUMBER: 75380A

ISSUED BY: N/A

SEQUOYAH NUCLEAR PLANT
FINAL SAFETY
ANALYSIS REPORT

FIGURE 7.2.1-1 SHEET 14A
(REVISED BY AMENDMENT 22)

SCALE: NONE EXCEPT AS NOTED

UNIT 2

FUNCTIONAL DIAGRAMS FEEDWATER CONTROL & ISLN

SEQUOYAH NUCLEAR PLANT
TENNESSEE VALLEY AUTHORITY

DESIGN		INITIAL ISSUE	ENGINEERING APPROVAL
DRAFTER: D.G.ROOP	CHECKER: SEE RO	RO ISSUE PER: DCN M02034A INC DCA-M2034-282 RO THIS DWG CREATED FROM AND SUPERSEDES DRAWING 1,2-5655D26-14 R0 (CONTRACT 91934)	1 N/A
DESIGNER: N/A	REVIEWER: N/A		2 SEE RO
			3 SEE RO
DATE 7-1-91	45 M	CCD NO:2-5655D26-14	R2

CAD MAINTAINED DRAWING

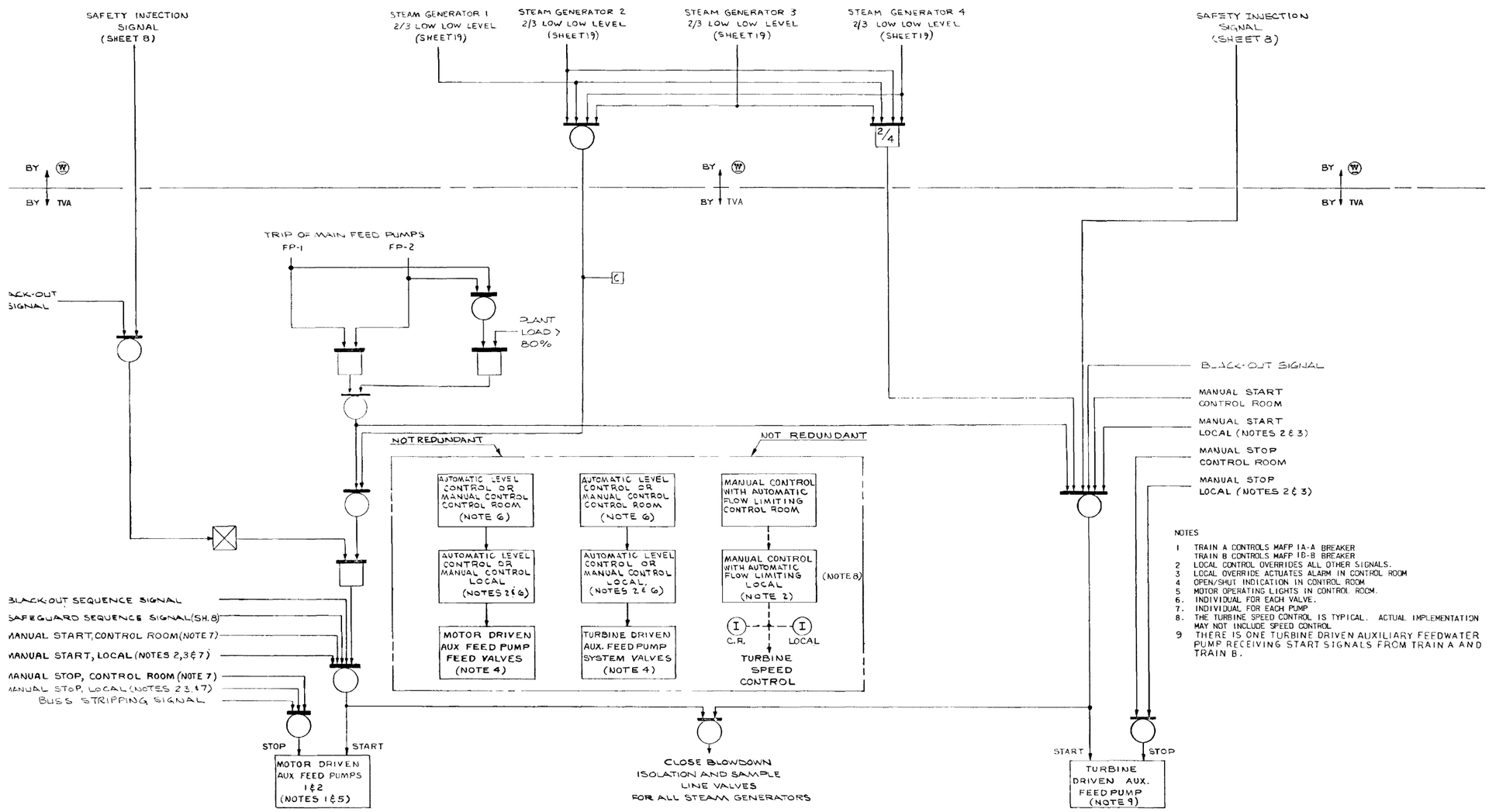

NOTES

1. TRAIN A CONTROLS MAFP 1A-A BREAKER
   TRAIN B CONTROLS MAFP 1B-B BREAKER
2. LOCAL CONTROL OVERRIDES ALL OTHER SIGNALS.
3. LOCAL OVERRIDE ACTUATES ALARM IN CONTROL ROOM
4. OPEN/SHUT INDICATION IN CONTROL ROOM
5. MOTOR OPERATING LIGHTS IN CONTROL ROOM.
6. INDIVIDUAL FOR EACH VALVE.
7. INDIVIDUAL FOR EACH PUMP
8. THE TURBINE SPEED CONTROL IS TYPICAL. ACTUAL IMPLEMENTATION MAY NOT INCLUDE SPEED CONTROL
9. THERE IS ONE TURBINE DRIVEN AUXILIARY FEEDWATER PUMP RECEIVING START SIGNALS FROM TRAIN A AND TRAIN B.

SEQUOYAH NUCLEAR PLANT
FINAL SAFETY
ANALYSIS REPORT

FIGURE 7.2.1-1 SHEET 15

FUNCTIONAL DIAGRAMS-AUXILIARY FEEDWATER PUMPS START-UP
(REVISED BY AMENDMENT 13)

DRAWING SERVICES UNIT
PROCAD MAINTAINED DRAWING
THIS CONFIGURATION CONTROL DRAWING IS MAINTAINED BY THE SQN CAD UNIT AND IS PART OF THE TVA PROCADAM DATABASE.
COMPUTER GRAPHICS

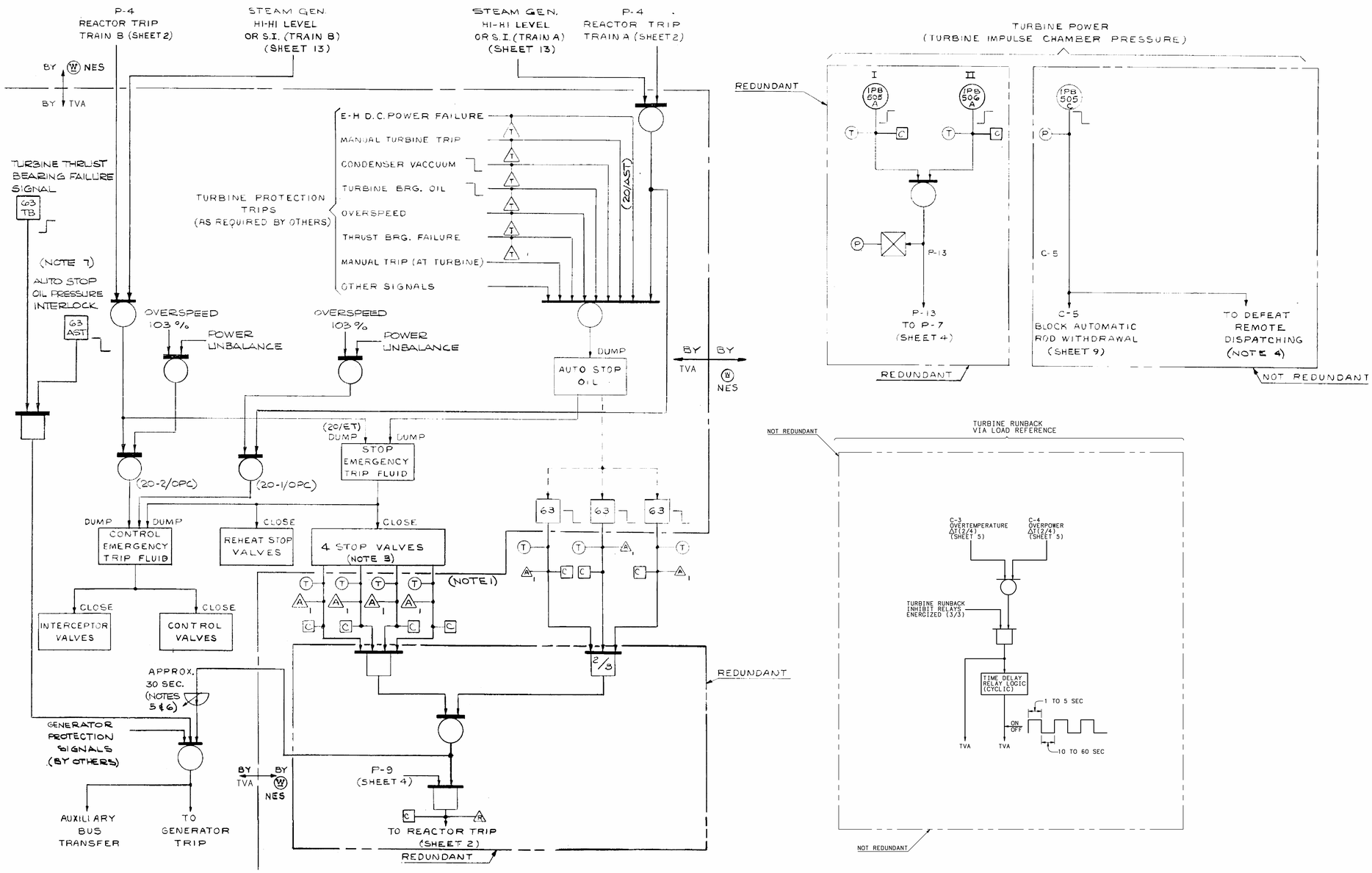

NOTES:

1. THESE SIGNALS INDICATE THE CLOSING OF THE STOP VALVES. POSITION DETECTION IS ACCOMPLISHED BY TWO CONTACTS PER STOP VALVE, ONE FOR EACH TRAIN. THE LOGIC SHOWN IS FOR FOUR STOP VALVES.
2. REDUNDANCY IS INDICATED AS REGARDS TO (W) REQUIREMENTS ONLY.
3. OPEN/SHUT INDICATION IN CONTROL ROOM.
4. THE REMOTE DISPATCHING IS TYPICAL. ACTUAL IMPLEMENTATION MAY NOT INCLUDE REMOTE DISPATCHING.
5. GENERATOR MOTORING PROTECTION SHOULD NOT DEFEAT THE 30 SEC. DELAY.
6. (W) S.I.D. REQUIRES THE THIRTY SECOND TIME DELAY TO BE REDUNDANT. ONE TIMER IS CONNECTED TO THE TRAIN A OUTPUT OF THE PROTECTION LOGIC SYSTEM AND THE OTHER TIMER IS CONNECTED TO THE TRAIN B OUTPUT. THE TIMER OUTPUTS ARE WIRED SO THAT EITHER WILL ACTUATE A GENERATOR TRIP.
7. THE "AND" LOGIC AND THE ASSOCIATED PRESSURE SWITCHES (63/TB AND 63/AST) MUST BE TESTED PERIODICALLY, WHILE ON LINE AT POWER, WITHOUT PLANT TRIP. TEST VALVES AND TEST LIGHTS ARE REQUIRED TO PROVIDE THOROUGH TESTING AND TO VERIFY PRESSURE SWITCH CONTACT STATUS.

SEQUOYAH NUCLEAR PLANT
FINAL SAFETY
ANALYSIS REPORT

FIGURE 7.2.1-1 SHEET 16

FUNCTIONAL DIAGRAMS-TURBINE TRIPS RUNBACKS & OTHER SIGNALS
(REVISED BY AMENDMENT 23)

CAD MAINTAINED DRAWING

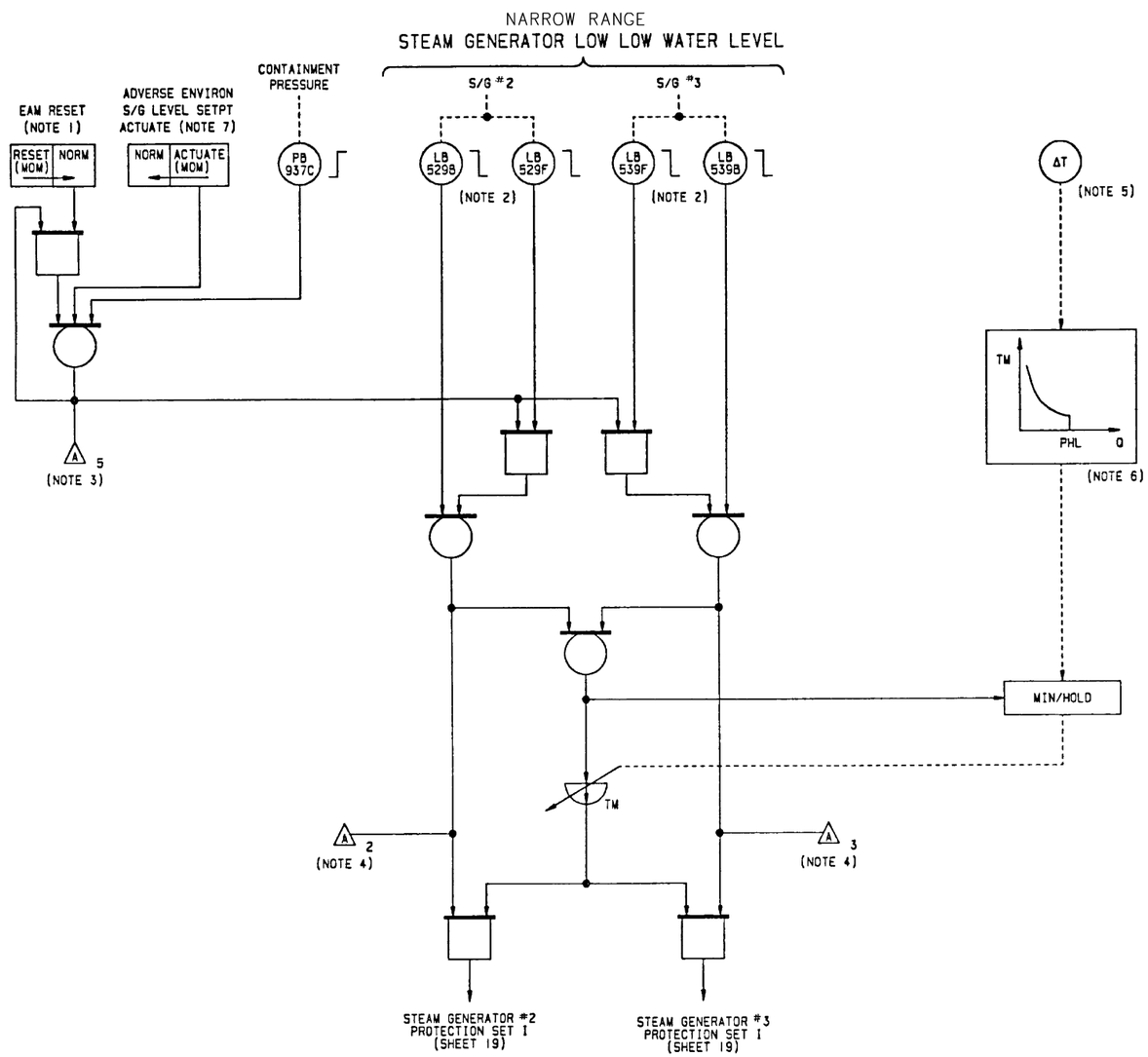

NOTES:

1. THE EAM RESET CONSISTS OF FOUR MOMENTARY SWITCHES LOCATED IN T ONE PER PROTECTION SET.
2. BISTABLES LB-529F AND 539F PROVIDE THE ADVERSE STEAM GENERATOR THE NORMAL LEVEL SETPOINT IS PROVIDED BY BISTABLES LB-529B AND
3. ONE COMMON ANNUNCIATOR WINDOW IS SHARED WITH ALARMS GENERATED PROTECTION SETS.
4. ONE COMMON ANNUNCIATOR WINDOW FOR EACH STEAM GENERATOR IS SHAR ALARMS GENERATED IN THE OTHER PROTECTION SETS.
5. ΔT IS A SRECIAL TEMPERATURE SIGNAL USED FOR POWER INDICATION O CONVERSION TO POWER IS PERFORMED PRIOR TO THE TIMER FUNCTION G
6. THE FOLLOWING DEFINITIONS APPLY TO THE FUNCTION GENERATOR:

   TM = ELAPSED TIME IF SETPOINT REACHED IN ONE OR MORE STEAM GE
   PHL = POWER HIGH LIMIT.
   Q = THERMAL POWER.

7. THE ADVERSE EAM STEAM GENERATOR LEVEL SETPOINT LATCH-IN CONTRO FOUR MOMENTARY SWITCHES LOCATED IN THE PROCESS CABINETS, ONE S PROTECTION SET.

SEQUOYAH NUCLEAR PLANT
FINAL SAFETY
ANALYSIS REPORT

FIGURE 7.2.1-1 SHEET 17
FUNCTIONAL DIAGRAMS ENVIRONMENT
ALLOWANCE MOD & TRIP TIME
DELAY LOGIC
(REVISED BY AMENDMENT 13)

DRAWING SERVICES UNIT
PROCAD MAINTAINED DRAWING
THIS CONFIGURATION CONTROL DRAWING IS MAINTAINED BY THE SQN CAD UNIT AND IS PART OF THE TVA PROCADAM DATABASE.
COMPUTER GRAPHICS

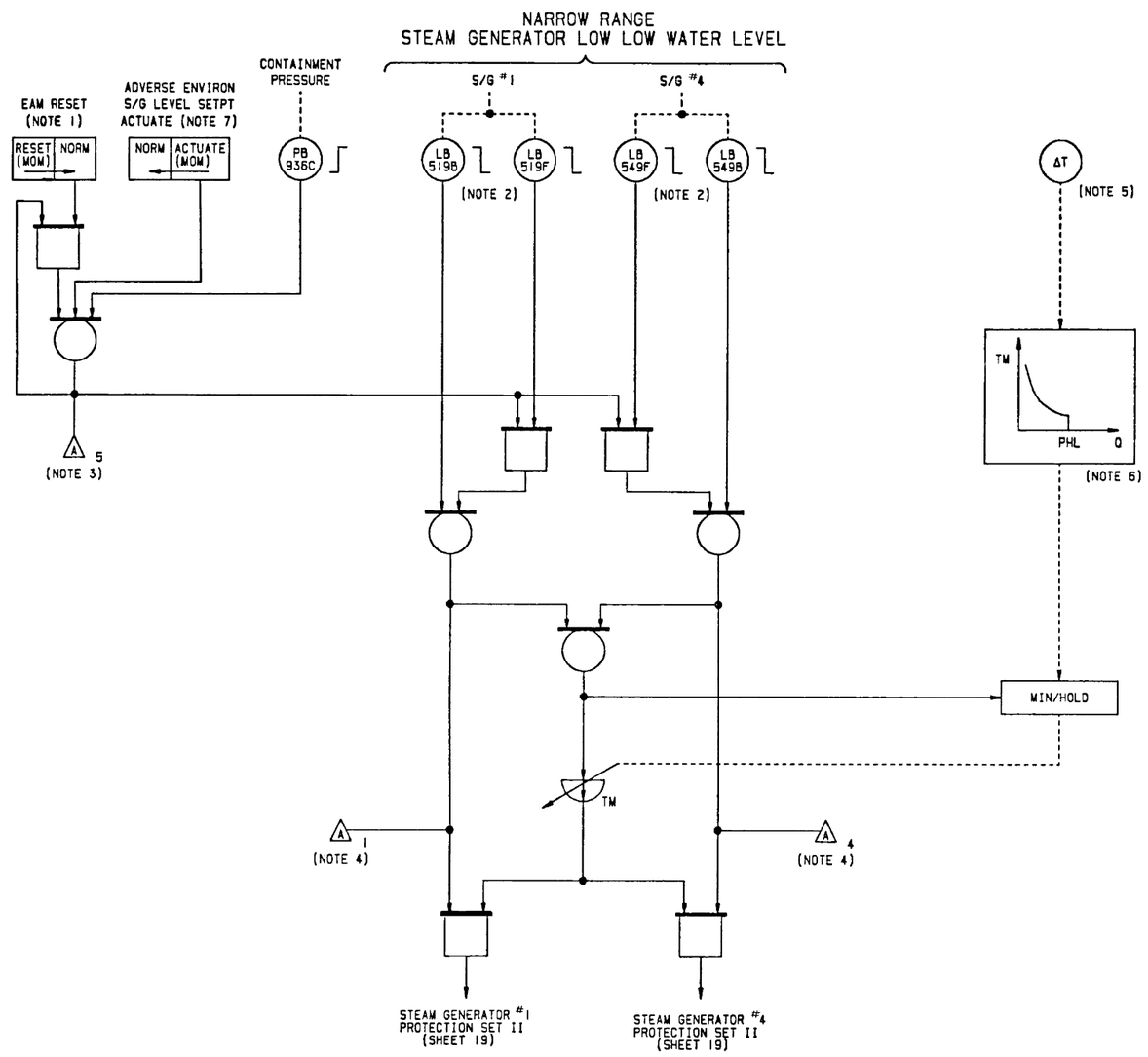

NOTES:

1. THE EAM RESET CONSISTS OF FOUR MOMENTARY SWITCHES LOCATED IN THE PROCESS CABINETS, ONE PER PROTECTION SET.
2. BISTABLES LB-519F AND 549F PROVIDE THE ADVERSE STEAM GENERATOR LEVEL SETPOINT. THE NORMAL LEVEL SETPOINT IS PROVIDED BY BISTABLES LB-519B AND 549B.
3. ONE COMMON ANNUNCIATOR WINDOW IS SHARED WITH ALARMS GENERATED IN THE OTHER PROTECTION SETS.
4. ONE COMMON ANNUNCIATOR WINDOW FOR EACH STEAM GENERATOR IS SHARED WITH ALARMS GENERATED IN THE OTHER PROTECTION SETS.
5. ΔT IS A SPECIAL TEMPERATURE SIGNAL USED FOR POWER INDICATION ONLY. CONVERSION TO POWER IS PERFORMED PRIOR TO THE TIMER FUNCTION GENERATOR.
6. THE FOLLOWING DEFINITIONS APPLY TO THE FUNCTION GENERATOR:

   TM = ELAPSED TIME IF SETPOINT REACHED IN ONE OR MORE STEAM GENERATORS.
   PHL = POWER HIGH LIMIT.
   Q = THERMAL POWER.

7. THE ADVERSE EAM STEAM GENERATOR LEVEL SETPOINT LATCH-IN CONTROL CONSISTS OF FOUR MOMENTARY SWITCHES LOCATED IN THE PROCESS CABINETS, ONE SWITCH PER PROTECTION SET.

SEQUOYAH NUCLEAR PLANT
FINAL SAFETY
ANALYSIS REPORT

FIGURE 7.2.1-1 SHEET 18
FUNCTIONAL DIAGRAMS ENVIRONMENT ALLOWANCE MOD & TRIP TIME DELAY LOGIC
(REVISED BY AMENDMENT 13)

DRAWING SERVICES UNIT
PROCAD MAINTAINED DRAWING
THIS CONFIGURATION CONTROL DRAWING IS MAINTAINED BY THE SQN CAD UNIT AND IS PART OF THE TVA PROCADAM DATABASE.
COMPUTER GRAPHICS

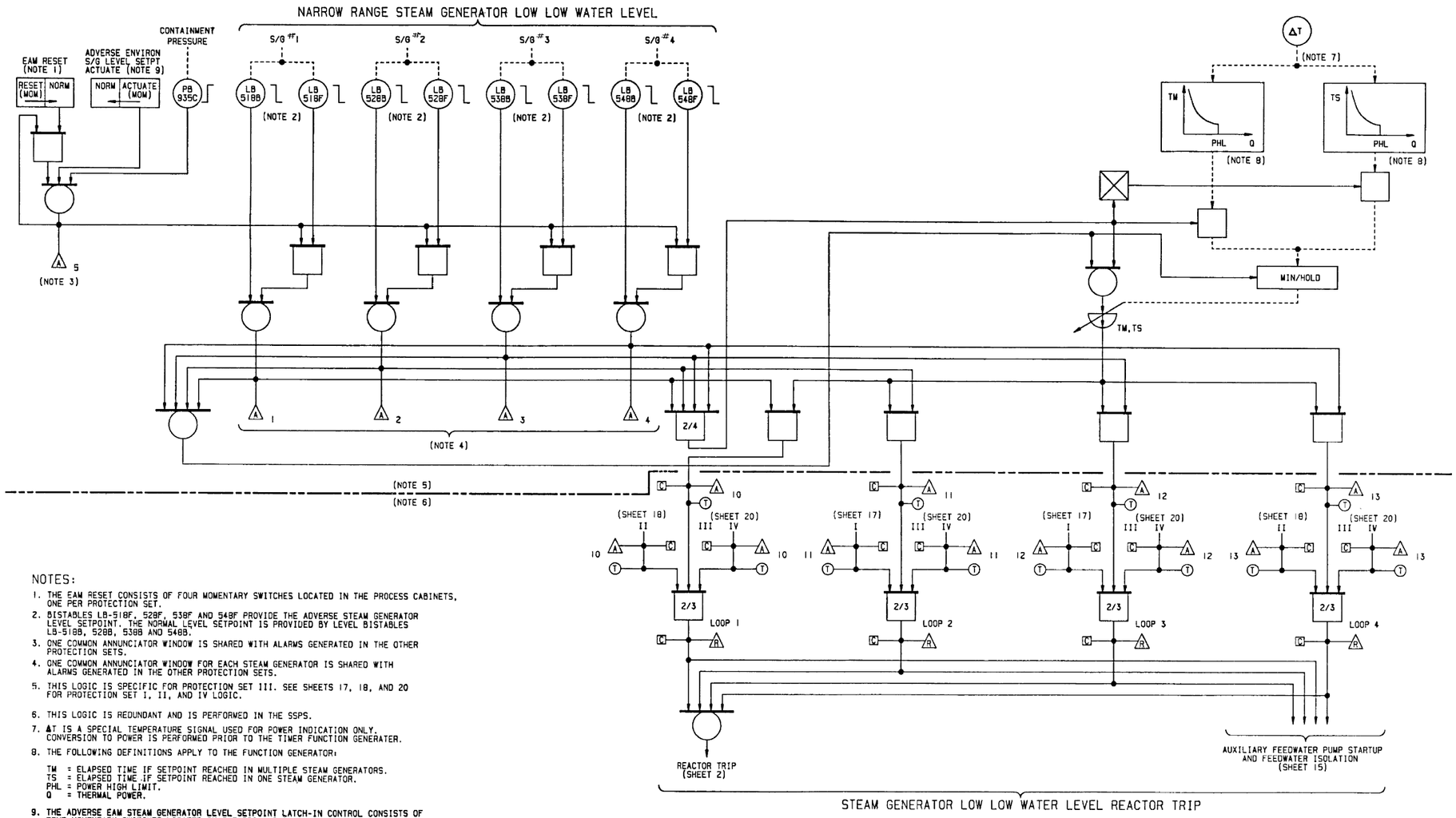

NOTES:

1. THE EAM RESET CONSISTS OF FOUR MOMENTARY SWITCHES LOCATED IN THE PROCESS CABINETS, ONE PER PROTECTION SET.
2. BISTABLES LB-518F, 528F, 538F AND 548F PROVIDE THE ADVERSE STEAM GENERATOR LEVEL SETPOINT. THE NORMAL LEVEL SETPOINT IS PROVIDED BY LEVEL BISTABLES LB-518B, 528B, 538B AND 548B.
3. ONE COMMON ANNUNCIATOR WINDOW IS SHARED WITH ALARMS GENERATED IN THE OTHER PROTECTION SETS.
4. ONE COMMON ANNUNCIATOR WINDOW FOR EACH STEAM GENERATOR IS SHARED WITH ALARMS GENERATED IN THE OTHER PROTECTION SETS.
5. THIS LOGIC IS SPECIFIC FOR PROTECTION SET III. SEE SHEETS 17, 18, AND 20 FOR PROTECTION SET I, II, AND IV LOGIC.
6. THIS LOGIC IS REDUNDANT AND IS PERFORMED IN THE SSPS.
7. ΔT IS A SPECIAL TEMPERATURE SIGNAL USED FOR POWER INDICATION ONLY. CONVERSION TO POWER IS PERFORMED PRIOR TO THE TIMER FUNCTION GENERATER.
8. THE FOLLOWING DEFINITIONS APPLY TO THE FUNCTION GENERATOR:

   TM = ELAPSED TIME IF SETPOINT REACHED IN MULTIPLE STEAM GENERATORS.
   TS = ELAPSED TIME IF SETPOINT REACHED IN ONE STEAM GENERATOR.
   PHL = POWER HIGH LIMIT.
   Q = THERMAL POWER.

9. THE ADVERSE EAM STEAM GENERATOR LEVEL SETPOINT LATCH-IN CONTROL CONSISTS OF FOUR MOMENTARY SWITCHES LOCATED IN THE PROCESS CABINETS, ONE SWITCH PER PROTECTION SET.

SEQUOYAH NUCLEAR PLANT
FINAL SAFETY
ANALYSIS REPORT

FIGURE 7.2.1-1 SHEET 19
FUNCTIONAL DIAGRAMS ENVIRONMENT ALLOWANCE MOD & TRIP TIME DELAY LOGIC
(REVISED BY AMENDMENT 13)

DRAWING SERVICES UNIT
PROCAD MAINTAINED DRAWING
THIS CONFIGURATION CONTROL DRAWING IS MAINTAINED BY THE SQN CAD UNIT AND IS PART OF THE TVA PROCADAM DATABASE.
COMPUTER GRAPHICS

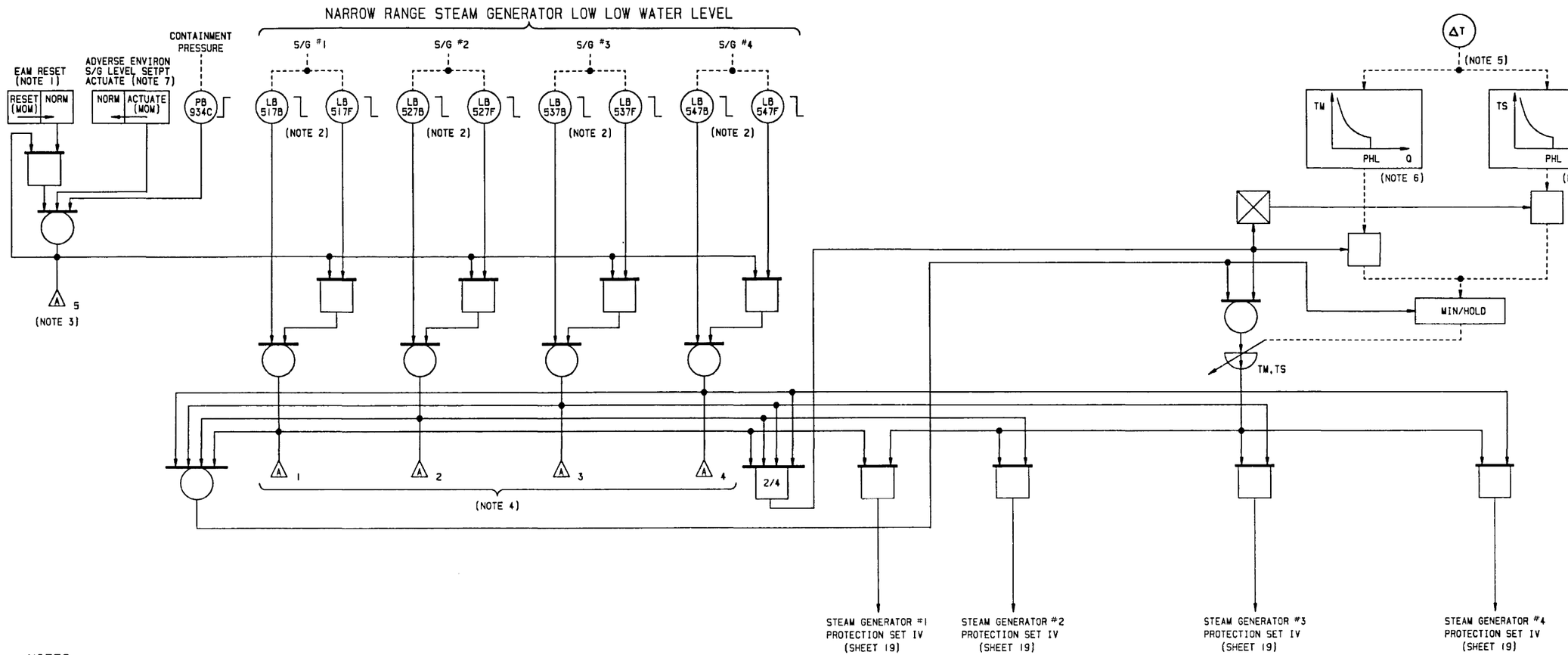

NOTES:

1. THE EAM RESET CONSISTS OF FOUR MOMENTARY SWITCHES LOCATED IN THE PROCESS CABINETS, ONE PER PROTECTION SET.
2. BISTABLES LB-517F, 527F, 537F AND 547F PROVIDE THE ADVERSE STEAM GENERATOR LEVEL SETPOINT. THE NORMAL LEVEL SETPOINT IS PROVIDED BY LEVEL BISTABLES LB-517B, 527B, 537B AND 547B.
3. ONE COMMON ANNUNCIATOR WINDOW IS SHARED WITH ALARMS GENERATED IN THE OTHER PROTECTION SETS.
4. ONE COMMON ANNUNCIATOR WINDOW FOR EACH STEAM GENERATOR IS SHARED WITH ALARMS GENERATED IN THE OTHER PROTECTION SETS.
5. ΔT IS A SPECIAL TEMPERATURE SIGNAL USED FOR POWER INDICATION ONLY. CONVERSION TO POWER IS PERFORMED PRIOR TO THE TIMER FUNCTION GENERATER.
6. THE FOLLOWING DEFINITIONS APPLY TO THE FUNCTION GENERATOR:

   TM = ELAPSED TIME IF SETPOINT REACHED IN MULTIPLE STEAM GENERATORS.
   TS = ELAPSED TIME IF SETPOINT REACHED IN ONE STEAM GENERATOR.
   PHL = POWER HIGH LIMIT.
   Q = THERMAL POWER.

7. THE ADVERSE EAM STEAM GENERATOR LEVEL SETPOINT LATCH-IN CONTROL CONSISTS OF FOUR MOMENTARY SWITCHES LOCATED IN THE PROCESS CABINETS, ONE SWITCH PER PROTECTION SET.

SEQUOYAH NUCLEAR PLANT
FINAL SAFETY
ANALYSIS REPORT

FIGURE 7.2.1-1 SHEET 20
FUNCTIONAL DIAGRAMS ENVIRONMENT ALLOWANCE MOD & TRIP TIME DELAY LOGIC
(REVISED BY AMENDMENT 13)

DRAWING SERVICES UNIT
PROCAD MAINTAINED DRAWING
THIS CONFIGURATION CONTROL DRAWING IS MAINTAINED BY THE SQN CAD UNIT AND IS PART OF THE TVA PROCADAM DATABASE.
COMPUTER GRAPHICS

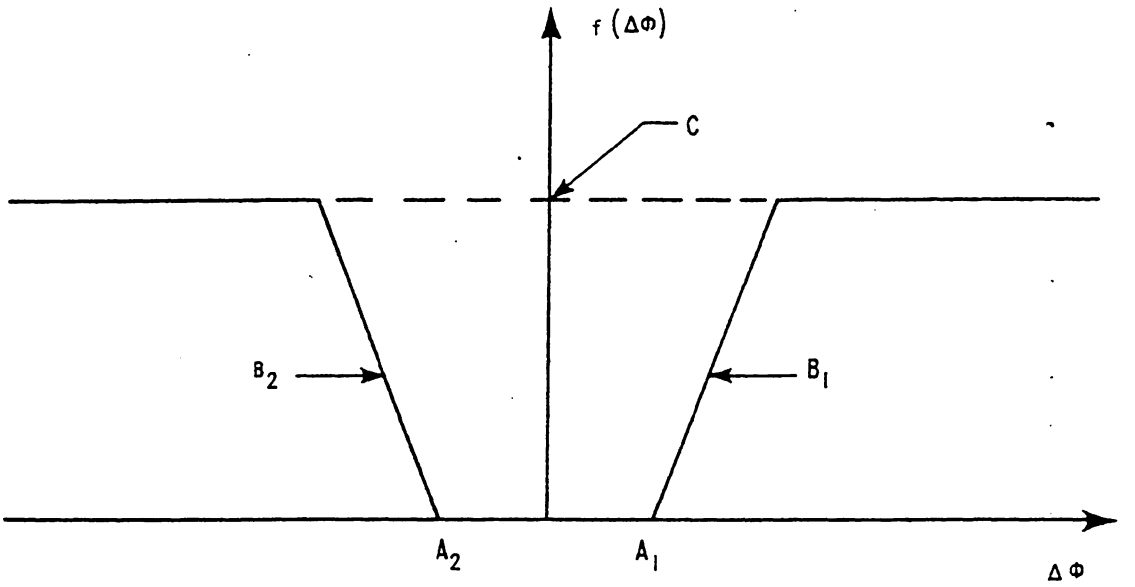

ΔΦ - NEUTRON FLUX DIFFERENCE BETWEEN UPPER AND LOWER LONG ION CHAMBERS

A_1, A_2 - LIMIT OF F (ΔΦ) DEADBAND

B_1, B_2 - SLOPE OF RAMP; DETERMINES RATE AT WHICH FUNCTION REACHES IT'S MAXIMUM VALUE ONCE DEADBAND IS EXCEEDED

C - MAGNITUDE OF MAXIMUM VALUE THE FUNCTION MAY ATTAIN

Figure 7.2.1-2 Setpoint Reduction Function for Overpower and Overtemperature ΔT Trips

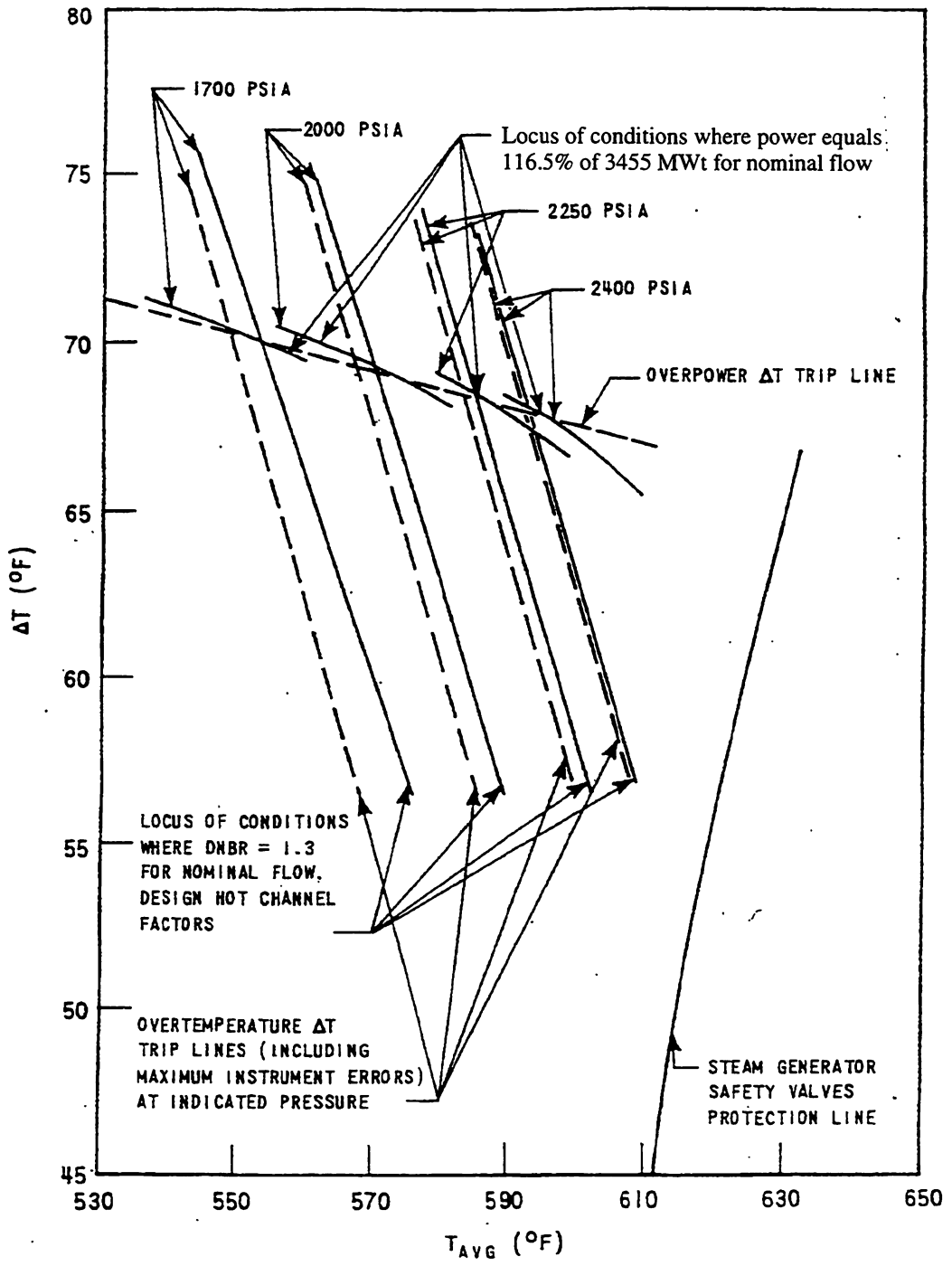

Figure 7.2.2-1 Typical Illustration of Overtemperature and Overpower ΔT Protection

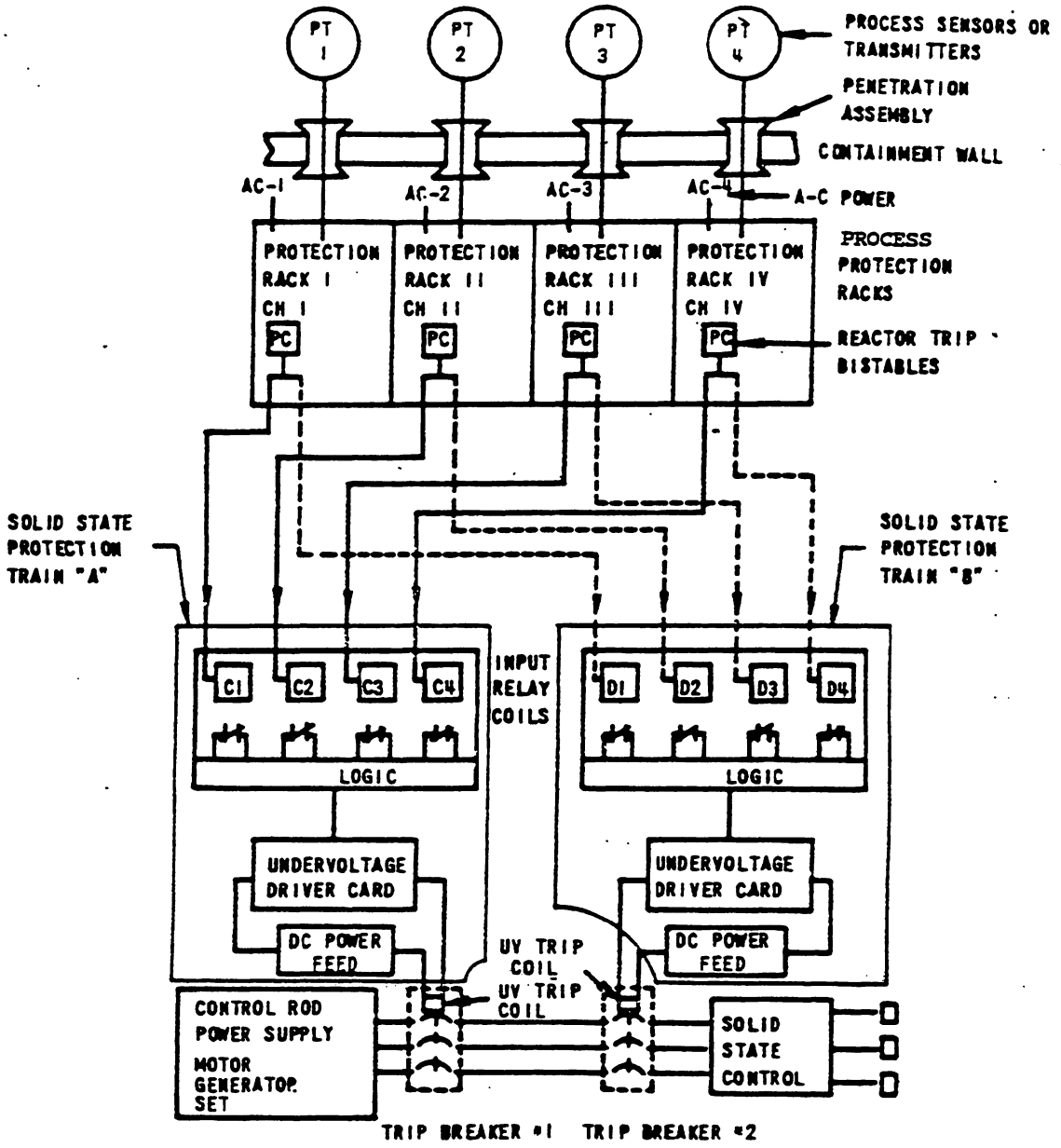

Figure 7.2.2-2 Design to Achieve Isolation Between Channels

7.3 ENGINEERED SAFETY FEATURES ACTUATION SYSTEM

In addition to the requirements for a reactor trip for anticipated abnormal transients, the facility will be provided with adequate instrumentation and controls to sense accident situations and initiate the operation of necessary Engineered Safety Features. The occurrence of a limiting fault, such as a loss of coolant accident or a steam break, requires a reactor trip plus actuation of one or more of the Engineered Safety Features in order to prevent or mitigate damage to the core and Reactor Coolant System components, and insure containment integrity.

In order to accomplish these design objectives the Engineered Safety Features System will have proper and timely initiating signals which are to be supplied by the sensors, transmitters and logic components making up the various instrumentation channels of the Engineered Safety Features Actuation System.

7.3.1 Description

The Engineered Safety Features Actuation System senses selected plant parameters, determines whether or not predetermined safety limits are being exceeded and, if they are, combines the signals into logic matrices sensitive to combinations indicative of primary or secondary system boundary ruptures (Class III or IV faults). Once the required logic combination is completed, the system sends actuation signals to those Engineered Safety Features Components whose aggregate function best serves the requirements of the accident. This conforms to 1971 GDC 13 and 20.

7.3.1.1 System Description

The Engineered Safety Features Actuation System is a functionally defined system described in this section. The equipment which provides the actuation functions identified in 7.3.1.1.1 is listed below and discussed in this section and the referenced WCAPs.

1. Process Instrumentation and Control System (Reference 9)
2. Solid State Logic Protection System (Reference 3)
3. Engineered Safety Features Test Cabinet (Reference 6)
4. Manual Actuation Circuits

The Engineered Safety Features Actuation System consists of two discrete portions of circuitry: 1) A process portion consisting of redundant channels which monitor various plant parameters such as the Reactor Coolant System and steam system pressures, temperatures, and flows and containment pressures; and 2) a digital portion consisting of two redundant logic trains which receive inputs from the process protection channels and perform the needed logic to actuate the Engineered Safety Features. Each digital train is capable of actuating the Engineered Safety Features equipment required. The intent is that any single failure within the Engineered Safety Features Actuation System shall not prevent system action when required.

The redundant concept is applied to both the process and logic portions of the system. Separation of redundant process channels begins at the process sensors and is maintained in the field wiring, containment vessel penetrations and process protection racks, terminating at the redundant groups of safeguards logic racks. This conforms to 1971 GDC 20, 21, 22, 23 and 24.

The variables are sensed by the process circuitry as discussed in Reference 1 and in Section 7.2. The outputs from the process channels are combined into actuation logic as shown on various sheets of Figure 7.2.1-1. Tables 7.3.1-1 and 7.3.1-2 give additional information pertaining to logic and function.

The interlocks associated with the Engineered Safety Features Actuation System are outlined in Table 7.3.1-3. These interlocks satisfy the functional requirements discussed in Section 7.1.2.

Controls are also provided to switch from the injection to the recirculation phase after a loss of coolant accident.

7.3.1.1.1 Function Initiation

In order to accomplish the design objectives the Engineered Safety Features System will have proper and timely initiating signals which are to be supplied by the sensors, transmitters and logic components making up the various instrumentation channels of the Engineered Safety Features Actuation System. The specific functions which rely on the Engineered Safety Features Actuation System for initiation are:

1. A reactor trip, provided one has not already been generated by the Reactor Trip System.

2. Engineered Safety Features Actuation System sequence which actuates the following items and insures the proper sequencing of Engineered Safety Features power demands on the Engineered Safety Features busses (supplied by either preferred or standby power supply).

    a. Cold leg injection isolation valves which are opened for injection of borated water by centrifugal charging pumps into the cold legs of the Reactor Coolant System.

    b. Charging pumps, safety injection pumps, residual heat removal pumps and associated valving which provide emergency makeup water to the cold leg of the Reactor Coolant System following a loss of coolant accident.

    c. Motor driven auxiliary feedwater pumps to protect the reactor and the steam generator during accident or emergency conditions by maintaining the steam generator heat sink without excessive cooldown of the primary coolant system.

3. Phase A containment isolation, whose function is to prevent fission product release.

4. Steam line isolation to prevent the continuous, uncontrolled blowdown of more than one steam generator and thereby uncontrolled Reactor Coolant System cooldown.

5. Main feedwater line isolation to limit the energy release in the case of a steamline break and to limit the magnitude of the reactor coolant system cooldown and prevent or mitigate the effect of excessive cooldown.

6. Start the emergency diesels to assure backup supply of power to emergency and supporting systems components.

7. Initiate a Control Room Isolation to meet control room occupancy requirements following a loss of coolant accident.

8. Containment Spray Actuation, which initiates containment spray to reduce containment pressure and temperature following a loss of coolant or steam break accident inside containment.

9. Phase B Containment Isolation to isolate the containment following a loss of coolant accident or steam or feedwater line break within the containment. Containment air return fans, actuated after a Phase B, to cool the containment and reduce the pressure in event of an accident.

10. Emergency Gas Treatment Actuation.

11. Essential Raw Cooling Water and Component Cooling Water Pump Start and Isolation.

12. Containment Ventilation Isolation.

13. Automatic switchover of the RHR pumps from the injection to the recirculation mode (post-LOCA).

14. Isolates the Auxiliary Building and actuates Auxiliary Building Gas Treatment.

7.3.1.1.2 Process Circuitry

The process sensors and racks for the Engineered Safety Features Actuation System are covered in References 1 and 9. Discussed in this report are the parameters to be measured including pressures, flows, tank and vessel water levels, and temperatures as well as the measurement and signal transmission considerations. These latter considerations include the basic current transmission system, transmitters, orifices and flow elements, resistance temperature detectors, and pneumatics. Other considerations covered are automatic calculations, signal conditioning and location and mounting of the devices.

The sensors monitoring the primary system are located as shown on the piping flow diagrams in Chapter 5, Reactor Coolant System. The secondary system sensor locations are shown on the steam system flow diagrams given in Chapter 10.

The following is a description of those process channels not included in the Reactor Trip or Engineered Safety Features Actuation Systems which enable additional monitoring of containment conditions in the post loss of coolant accident recovery period. These channels are located outside of the containment (with the exception of sump instrumentation) and will not be affected by the accidents.

1. High head safety injection pumps discharge pressure

   These channels clearly show that the safety injection pumps are operating. The transmitters are outside the containment.

2. Pump energization

   Pump motor power feed breakers indicate that they have closed by energizing indicating lights on the control board.

3. Valve position

   All Engineered Safety Features remote operated valves have position indication on the control board in two places to show proper positioning of the valves. Red and green indicator lights are located next to the manual control station showing open and closed positions. The Engineered Safety Features positions of these valves are displayed on the monitor light panels, which consist of an array of white lights which are dark when the valves are in their normal or required positions for power operations. The monitor lights for automatically actuated valves are energized when the valve is in the automatically actuated position. These monitor lights thus enable the operator to quickly assess the status of the safeguards systems. These indications are derived from contacts integral to the valve operators. In the cases of the accumulator isolation valves, redundancy of position indication is provided by valve stem mounted limit switches which actuate annunciators on

the control board when the valves are not correctly positioned for Engineered Safety Features Actuation. The stem mounted switches are independent of the limit switches in the motor operators. See Section 7.6 for additional information.

7.3.1.1.3 Digital Circuitry

The Engineered Safety Features logic racks are discussed in detail in Reference 3. The description includes the considerations and provisions for physical and electrical separation as well as details of the circuitry. Reference 3 also covers certain aspects of online test provisions, provisions for test points, considerations for the instrument power source, considerations for accomplishing physical separation, and provisions for assuring instrument qualification. The outputs from the process channels are combined into actuation logic as shown in Figure 7.2.1-1.

To facilitate engineered safety features actuation testing, two cabinets (one per train) are provided which enable operation, to the maximum practical extent, of safety features loads on a group by group basis until actuation of all devices has been checked. Final actuation testing is discussed in detail in Subsection 7.3.2.

7.3.1.1.4 Final Actuation Circuitry

The outputs of the solid state logic protection system (the slave relays) are typically energized to actuate. These devices are listed as follows:

1. Safety Injection System pump and valve actuators. See Chapter 6 for flow diagrams and additional information.

2. Containment Isolation (Phase A - signal isolates all non-essential process lines on receipt of safety injection signal; Phase B - signal isolates remaining process lines (which do not include safety injection lines) on receipt of 2/4 high-high containment pressure signal). For further information, see Subsection 6.2.4. (Both containment isolation Phase A and Phase B may be manually actuated by the Operator).

3. ERCW and CCW pump and valve actuators. (See Chapter 9).

4. Auxiliary feed pumps start (See Chapter 6).

5. Emergency diesel start (See Chapter 8).

6. Feedwater isolation (See Chapter 10).

7. Containment ventilation isolation valve and damper actuators (See Chapter 6).

8. Main steam line isolation valve actuators (See Chapter 10).

9. Containment spray pump and valve actuators (See Chapter 6).

10. Control room isolation (See Chapter 9).

11. Auxiliary building isolation and Auxiliary Building Gas Treatment actuation (See Chapter 6&9).

12. Emergency Gas Treatment System (See Chapter 6).

If an accident is assumed to occur coincident with a station electrical blackout, the Engineered Safety Features loads must be sequenced onto the diesel generators to prevent overloading them. This sequence is discussed in Chapter 8. The design conforms to 1971 GDC 35.

7.3.1.1.5 Support Systems

The following systems are required for support of the Engineered Safety Features:

1. Essential Raw Cooling Water - Heat Removal (See Chapter 9).

2. Component Cooling Water Systems - Heat Removal (See Chapter 9).

3. Electrical Power Distribution Systems (See Chapter 8).

4. Auxiliary Control Air System (See Chapter 9).

5. Heating, Ventilating and Air Conditioning Systems (See Chapter 9).

7.3.1.2 Design Bases Information

The functional diagrams presented in Figure 7.2.1-1, sheets 5, 6, 7, 8, 14, 17, 18, and 19 provide a graphic outline of the functional logic for the Engineered Safety Features Actuation System. Requirements for the Engineered Safety Features System are given in Chapter 6. Given below is the design bases information requested in IEEE 279-1971 Reference 2.

7.3.1.2.1 Generating Station Conditions

The following are examples of Condition III and IV events requiring protective action:

1. Primary System Accidents

   a. Rupture in small pipes or cracks in large pipes
   b. Rupture of a reactor coolant pipe (loss of coolant accident)
   c. Steam generator tube rupture

2. Secondary System Accidents

   a. Minor secondary system pipe breaks resulting in steam release rates equivalent to a single dump, relief or safety valve
   b. Rupture of a major steam pipe

7.3.1.2.2 Generating Station Variables

The following list summarizes the generating station variables required to be monitored by the Engineered Safety Features Actuation System during each accident identified in the preceding section. Post accident monitoring requirements are given on Tables 7.5.1 and 7.5.2.

1. Primary System Accidents
   a. Pressurizer pressure
   b. Containment pressure (not required for Steam Generator tube rupture)

2. Secondary System Accidents
   a. Pressurizer pressure
   b. Steam line pressures

c. Steam line pressure rate
d. Reactor coolant average temperature (T_{avg})
e. Containment pressure

7.3.1.2.3 Spatially Dependent Variables

The only variable sensed by the Engineered Safety Features Actuation System which has spatial dependence is reactor coolant narrow range hot leg temperature. The effect on the measurement is negated by taking multiple samples from the reactor coolant hot leg and electronically averaging these samples in the process protection system.

7.3.1.2.4 Limits, Margins and Levels

Prudent operational limits, available margins and setpoints before onset of unsafe conditions or requiring protective action are discussed in Chapter 15 and the Technical Specifications. (Refer also to Subparagraph 7.1.2.1.9)

7.3.1.2.5 Abnormal Events

The malfunctions, accidents, or other unusual events which could physically damage protection system components or could cause environmental changes are as follows:

1. Loss of coolant accident (See Sections 15.3 and 15.4)
2. Steam breaks (See Sections 15.3 and 15.4)
3. Earthquakes (See Chapter 3 and Chapter 2)
4. Fire (See Subsection 9.5.1)
5. Explosion (Hydrogen buildup inside containment) (See Section 15.4)
6. Missiles (See Section 3.5 and 10.2.3)
7. Flood (See Chapters 2 and 3)

7.3.1.2.6 Minimum Performance Requirements

Minimum performance requirements are as follows:

1. System response times:

   The Engineered Safety Features actuation system response time, or time delay, is defined as the interval required for the Engineered Safety Features sequence to be initiated subsequent to the point in time that the appropriate variables(s) exceed setpoint(s). The delay time includes sensor, process and logic (digital) delay plus, the time delay associated with tripping open the reactor trip breakers, although the reactor trip (on Engineered Safety Feature Actuation Signal) theoretically occurs before or simultaneously with Engineered Safety Features sequence initiation (See Figure 7.2.1-1, Sheet 8). The ESFAS response time values are provided in Table 7.3.1-4.

   The design of the alternating current distribution system in conjunction with the worst-case accident conditions introduces a potential five-second delay in achieving minimum equipment operating voltage for 480-volt safety-related loads with offsite power available. This potential delay results from the worst-case automatic tap changer movement on the common station service transformers. The response times shown in Table 7.3.1-4 support surveillance test conditions with the onsite power system at normal voltage levels. The accident analysis supports an additional five-second duration for safety related equipment that is affected by the potential delay in achieving adequate voltage.

2. System accuracies are described in "Westinghouse Setpoint Methodology for Protection Systems, Sequoyah Units 1 and 2," WCAP 11239 for the following:

   a. Pressurizer low pressure
   b. Steam line pressure
   c. T_{avg}
   d. Containment pressure signal

3. Ranges of sensed variables to be accommodated until conclusion of protection action is assured:

   Typical ranges required in generating the required actuation signals for loss of coolant protection are given:

a. Pressurizer pressure	1700 to 2500 psig
b. Containment pressure (Ice Condenser System)	-1 to 15 psig

   Typical ranges required in generating the required actuation signals for steam break protection are given:

a. T_{avg}	530 to 630°F
b. Steam line pressure	0 to 1200 psig
c. Containment pressure (Ice Condenser System)	-1 to 15 psig

7.3.2 Analysis

7.3.2.1 Failure Mode and Effects Analyses

Failure mode and effects analysis have been performed on ESF systems equipment within the Westinghouse scope of supply. The results verify that these systems meet protection system single failure criteria as required by IEEE-279. The Sequoyah ESF systems, although not identical to those systems analyzed, are designed to equivalent safety design criteria.

Safety related equipment in the scope of TVA is reviewed for failure modes and effects, but is not documented in a separate report.

7.3.2.2 Compliance With Standards and Design Criteria

Discussion of the NRC General Design Criteria is provided in various sections of Chapter 7 where a particular GDC is applicable. Compliance with certain IEEE Standards is presented in Paragraphs 7.1.2.5, 7.1.2.6, 7.1.2.7, and 7.1.2.9. Compliance with Regulatory Guide 1.22 is discussed in Paragraph 7.1.2.8. Compliance with Regulatory Guide 1.11 is discussed in Paragraph 6.2.4.1 and 6.2.4.3. The discussion given below shows that the Engineered Safety Features Actuation System complies with IEEE 279-1971 (Reference 2).

Evaluation of Compliance with IEEE-279, 1971, Reference 2

7.3.2.2.1 Single Failure Criteria

The discussion presented in Subparagraph 7.2.2.2.3 (Item 1) is applicable to the Engineered Safety Features Actuation System, with the following exception.

In the Engineered Safety Features, a loss of instrument power will call for actuation of Engineered Safety Features equipment controlled by the specific comparator that lost power (except for containment spray and automatic switchover from the Refueling Water Storage Tank to the Containment Sump for pump suction following a Safety Injection). The actuated equipment must have power to comply. The power supply for the protection systems is discussed in Chapter 8. For containment spray, the final bistables are energized to trip to avoid spurious actuation. In addition, manual containment spray requires simultaneous actuation of two manual controls. There are two sets (2 switches/set) of manual containment spray controls available. This is considered acceptable because spray actuation on high-high containment pressure signal provides automatic initiation of the system via protection channels meeting the criteria in Reference 2. Moreover, all Engineered Safety Features equipment (valves, pumps, etc.) can be individually manually actuated from the control board. Hence, a third mode of containment spray initiation is available. The design conforms to 1971 GDC 21 and 23.

7.3.2.2.2 Equipment Qualification

The ability of equipment inside containment which is required for post loss of coolant accident operation to function in the adverse environment associated with the loss of coolant accident or incontainment steam break has been evaluated in Reference 4 and Section 3.11.

7.3.2.2.3 Channel Independence

The discussion presented in Subparagraph 7.2.2.2.3 (Item 4) is applicable. The Engineered Safety Features outputs from the solid state logic protection cabinets are redundant, and the actuations associated with each train are energized up to and including the final actuators by the separate AC power supplies which power the logic trains.

7.3.2.2.4 Control and Protection System Interaction

The discussions presented in Subparagraph 7.2.2.2.3 (Item 5) are applicable.

7.3.2.2.5 Capability for Sensor Checks and Equipment Test and Calibration

The discussions of system testability in Subparagraph 7.2.2.2.3 (Item 6) are applicable to the sensors, process circuitry, and logic trains of the Engineered Safety Features Actuation System.

The following discussions cover those areas in which the testing provisions differ from those for the Reactor Trip System:

Testing of Engineered Safety Features Actuation Systems

The Engineered Safety Features Systems are tested to provide assurance that the systems will operate as designed and will be available to function properly in the unlikely event of an accident. WCAP 7705, Reference 6, discusses Engineered Safety Features test cabinets that are typical of the Sequoyah Plant and is referenced for information only. The testing program meets the requirements of Regulatory Guide 1.22 as discussed in Paragraph 7.1.2.8 and Criteria 21, 37, 40 and 43 of the 1971 GDC. The program is as follows:

1. Prior to initial plant operations, Engineered Safety Features System tests were conducted.

2. Subsequent to initial startup, Engineered Safety Features System tests are conducted in accordance with Technical Specifications.

3. During on-line operation of the reactor, all of the Engineered Safety Features process and logic circuitry are fully tested. In addition, testable Engineered Safety Features final actuators are tested.

4. During normal operation, the operability of testable final actuation devices of the Engineered Safety Features Systems is tested by manual initiation from the control room.

Reference 7 documents a methodology to be used to justify revisions to the technical specifications. The methodology consists of the deterministic and numerical evaluation of the effects of particular technical specification changes with consideration given to such things as safety, equipment requirements, human factors and operation impacts. The technical specification revisions evaluated were increased test and maintenance times, less frequent surveillance and testing in bypass.

Performance Test Acceptability Standard for the "S" (Safety Injection Signal) and for the "P" (the Automatic Demand Signal for Containment Spray Actuation) Actuation Signals Generation

During reactor operation, the basis for Engineered Safety Features Actuation Systems acceptability is the successful completion of the overlapping tests performed on the Reactor Trip and the Engineered Safety Features Actuation Systems. Process checks verify operability of the sensors. Checks of process indications verify the operability of the process circuitry from the input of these circuits through to and including the logic input relays. Solid State logic testing checks the digital signal path from and including logic input relay contacts through the logic matrices and master relays and performs continuity tests on the coils of the output slave relays. Final actuator testing verifies operability of those devices which require safeguards actuation and which can be tested without causing plant upset. Operation of the final devices is confirmed by control board indication or visual observation that the appropriate pump motor breakers close and automatic valves have completed their travel.

The basis for acceptability for the Engineered Safety Features interlocks is control board indication of proper receipt of the signal upon introducing the required input at the appropriate setpoint.

Frequency of Performance of Engineered Safety Features Actuation Tests

Refer to the Technical Specifications for system tests and test frequencies.

Engineered Safety Features Actuation Test Description

The following sections describe the testing circuitry and procedures for the on-line portion of the testing program. The guidelines used in developing the circuitry and procedures are:

1. The test procedures must not involve the potential for damage to any plant equipment.

2. The test procedures must minimize the potential for accidental tripping.

3. The provisions for on line testing must minimize complication of engineered safety features actuation circuits so that their reliability is not degraded.

Description of Initiation Circuitry

Several systems comprise the total Engineered Safety Features System, the majority of which may be initiated by different process conditions and be reset independently of each other. Refer to Figure 7.2.1-1 for functions and auxiliary support systems and their initiating signals.

Each function is actuated by a logic circuit which is duplicated for each of the two redundant trains of Engineered Safety Features initiation circuits.

The output of each of the initiation circuits consists of a master relay which drives slave relays for contact multiplication as required. The logic, master, and slave relays are mounted in the solid state logic protection cabinets designated Train A, and Train B respectively, for the redundant counterparts. The master and slave relay circuits operate various pump and fan motor circuit breakers or starters, motor operated valve contactors, solenoid operated valves, emergency generator starting, etc.

Process Testing

Process testing is identical to that used for reactor trip circuitry and is described in Paragraph 7.2.2.2.3. Briefly, in the process racks, a portable Man-Machine-Interface (MMI) Unit is used together with a rack mounted test panel to facilitate testing. Administrative control requires, during comparator testing, that the comparator output be put in a trip condition which disconnects and thus de-energizes (operates) the comparator output relays in Train A and Train B cabinets. This of necessity, is done on one channel at a time. Status lights and single channel trip alarms in the main control room verify that the bistable relays have been de-energized and the bistable outputs are in the trip mode. An exception to this is containment spray, which is energized to actuate 2/4 and changes to 2/3 when one channel is in test.

Solid State Logic Testing

After the individual channel process testing is complete, the logic matrices are tested as described in 7.2.2.2.3 (6). During logic testing of one Train, the other Train can initiate the required Engineered Safety Features function. For additional details, see Reference 3.

Actuator Testing

At this point, testing of the initiation circuits through operation of the master relay and its contacts to the coils of the slave relays has been accomplished. Slave relays do not operate because of the reduced voltage.

The actuation components are tested during plant shutdown. Overlap testing between the slave relays and actuation devices completes the ESFAS test.

Time Required for Testing

It is estimated that process testing can be performed at a rate of several channels per hour. Logic testing can be performed in less than 30 minutes.

Summary

The procedures described in this section provide capability for checking completely from the process signal to the logic cabinets and from there to the individual pump and fan motor circuit breakers or starters, valve contactors, pilot solenoid valves, etc. including all field cabling actually used in the circuitry called upon to operate for an accident condition.

The procedures require testing at various locations.

1. Process testing and verification of comparator setpoint are accomplished at process racks. Verification of comparator relay operation is done at the main control room status lights.

2. Logic testing through operations of the master relays and low voltage application to slave relays is done at the logic rack test panel.

3. Testing of pumps, fans and valves will be a function of control room operator availability.

Testing During Shutdown

Emergency Core Cooling System actuation tests are performed as required in the Technical Specifications (normally at each major fuel reloading). With the Reactor Coolant System pressure less than or equal to 350 psig and temperature less than or equal to 350°F, a test safety injection signal is applied to initiate operation of the system. The safety injection and residual heat removal pumps are made inoperable for this test.

Containment spray system actuation tests are performed as required in the Technical Specifications (normally at each major fuel reloading). The tests are performed one train at a time with the isolation valves in the spray supply lines and the containment sump suction lines blocked closed and the appropriate valves in the recirculation path to the RWST open. The tests are initiated by tripping the normal actuation instrumentation.

Periodic Maintenance Inspections

The maintenance procedures for the engineered safety feature actuation system which follow may be accomplished in any order. The frequency will depend on the operating conditions and requirements of the reactor power plant. If any degradation of equipment operation is noted, either mechanically or electrically, remedial action is taken to repair, replace, or readjust the equipment. Optimum operating performance must be achieved at all times.

Typical maintenance procedures include the following:

1. Check cleanliness of exterior and interior surfaces where accessible.

2. Check all fuses for corrosion.

3. Inspect for loose or broken control knobs and burned out indicator lamps.

4. Inspect for rust, moisture and condition of cables and wiring.

5. Mechanically check all connectors and terminal boards for looseness, poor connection, or corrosion.

6. Inspect the components of each assembly for signs of overheating or component deterioration.

7. Perform complete system operating check.

The balance of the requirements listed in Reference 2 (Paragraphs 4.11 through 4.22) are discussed in Subparagraph 7.2.2.2.3. Paragraph 4.20 receives special attention in Section 7.5.

7.3.2.2.6 Manual Initiation of Protective Action

The manual initiation of reactor trip, safety injection, containment isolation A, containment spray (along with containment isolation B and containment ventilation isolation), and diesel generator start are all accomplished on the system level. However, the manual initiation of both steamline isolation, and switchover from injection to recirculation following a loss of primary coolant accident are performed at the component level only, so that the initiation of these two systems is not specifically designed to meet Section 4.17 of IEEE 279-1971.

The main steam isolation valves are included in the plant design to mitigate the consequences resulting from steam line breaks, and protection logic is provided in the plant design to automatically close the valves when necessary.

The inadvertent manual closure of any single MSIV or the simultaneous closure of all MSIVs both create Condition II faults. If all valves are closed simultaneously when the plant is operating at full power, a loss-of-load accident will result with a consequent primary and secondary side pressure increase, reactor trip and secondary side safety valve release. In the event that only one valve closes on inadvertent manual actuation when the plant is operating at full power, the steam flow in the other loops will increase in an attempt to restore full power steam flow. The non-symmetric steam flow can cause an increase in reactor power due to the non-symmetric loop temperatures and to the moderator temperature coefficient of reactivity. Consequently margins to DNB are reduced.

Since remote individual closure of the steam line isolation valves from the control room is required for operational reasons, it is not felt that putting additional manual capabilities which can lead to the inadvertent closure of all steam stop valves is in the direction of reactor safety.

There are four individual main steam isolation valve momentary control switches (one per loop) mounted on the control board. Each switch when actuated will isolate one of the main steam lines.

The manual operations performed at the component level for switchover from safety injection to cold leg recirculation following a loss of primary coolant accident are described in Table 6.3.2-4.

7.3.2.3 Further Considerations

In addition to the considerations given above, a loss of one train of instrument air or loss of one train of component cooling water to vital equipment has been considered. Neither the loss of one train of instrument air nor the loss of one train of cooling water can cause safety limits as given in the SQN Technical Specifications to be exceeded or prevent the mitigation of an accident.

Safety related systems that use instrument air to perform their functions generally are designed to assume their safe condition upon loss of instrument air (e.g., isolation dampers). However, all systems are redundant and each counterpart supplied from an independent instrument air supply. The following systems use instrument air to perform their required functions: (1) control bay heating, ventilation, and air conditioning system; (2) auxiliary building gas treatment system; (3) containment vacuum relief system; (4) emergency gas treatment system; (5) turbine driven auxiliary feedwater system; and (6) motor driven auxiliary feedwater level control system.

7.3.2.4 Summary

The effectiveness of the Engineered Safety Features Actuation System is evaluated in Chapter 15, based on the ability of the system to contain the effects of Condition III and IV faults, including loss of coolant and steam line break accidents. The Engineered Safety Features Actuation system parameters are based upon the component performance specifications which are given by the manufacturer or verified by test for each component. Appropriate factors to account for uncertainties in the data are factored into the constants characterizing the system.

The Engineered Safety Features Actuation system must detect Condition III and IV faults and generate signals which actuate the Engineered Safety Features. The system must sense the accident condition and generate the signal actuating the protection function reliably and within a time determined by and consistent with the accident analyses in Chapter 15.

Much longer times are associated with the actuation of the mechanical and fluid system equipment associated with Engineered Safety Features. This includes the time required for switching, bringing pumps and other equipment to speed and the time required for them to take load. Consideration is given these times in the accident analysis (Chapter 15).

Operating procedures require that the complete Engineered Safety Features Actuation System normally be operable. However, redundancy of system components is such that the system operability assumed for the safety analyses can still be met with certain instrumentation channels out of service. Channels that are out of service are to be placed in the tripped mode or bypass mode. See section 7.2 for more detail on the use of bypasses.

7.3.2.4.1 Loss of Coolant Protection

By analysis of loss of coolant accident and in system tests it has been verified that except for very small coolant system breaks which can be protected against by the charging pumps followed by an orderly shutdown, the effects of various loads of coolant accidents are reliably detected by the low pressurizer pressure; the Emergency Core Cooling System is actuated in time to prevent or limit core damage. (Refer to Section 15.3.1.)

For large coolant system breaks the passive accumulators inject first, because of the rapid pressure drop. This protects the reactor core during the unavoidable delay associated with actuating the active Emergency Core Cooling System phase. (Refer to Section 15.4.1.)

High containment pressure also actuates the Emergency Core Cooling System. Therefore, emergency core cooling actuation can be brought about upon sensing this other direct consequence of a primary system break; that is the protection system detects the leakage of the coolant into the containment.

Containment spray will provide additional emergency cooling of containment and also limit fission product release upon sensing elevated containment pressure (high-high) to mitigate the effects of a loss of coolant accident.

The delay time between detection of the accident condition and the generation of the actuation signal for these systems is assumed to be about 1.0 second; well within the capability of the protection system equipment. However, this time is short compared to that required for startup of the fluid systems. The analyses in Chapter 15 show that the diverse methods of detecting the accident condition and the time for generation of the signals by the protection systems and time for initiation of protective action are adequate to provide reliable and timely protection against the effects of loss of coolant.

7.3.2.4.2 Steam Break Protection

The Emergency Core Cooling System is also actuated in order to protect against a steam line break. About 2.0 seconds elapses between sensing low steamline pressure and generation of the actuation signal. Analysis of steam break accidents assuming this delay for signal generation shows that the Emergency Core Cooling system is actuated in time to limit or prevent further core damage for steam break cases. There is a reactor trip but the core reactivity is further reduced by the highly borated water injected by the Emergency Core Cooling System.

Additional protection against the effects of steam break is provided by feedwater isolation which occurs upon actuation of the Emergency Core Cooling System. Feedwater line isolation is initiated in order to prevent excessive cooldown of the reactor.

Additional protection against a steam break accident is provided by closure of all steam line isolation valves in order to prevent uncontrolled blowdown of all steam generators. The generation of the protection system signal (about 2.0 seconds) is again short compared to the time to close the fast acting steam line isolation valves.

In addition to actuation of the Engineered Safety Features, the effect of a steam break accident also generates a signal resulting in a reactor trip on overpower or following Emergency Core Cooling System actuation. However, the core reactivity is further reduced by the highly borated water injected by the Emergency Core Cooling System.

The analyses in Chapter 15 of the steam break accidents and an evaluation of the protection system instrumentation and channel design shows that the Engineered Safety Features Actuation Systems are effective in preventing or mitigating the effects of a steam break accident.

7.3.2.4.3 Response to IE Information Notice 79-22

TVA has performed a systematic (matrix) evaluation of the environmental effects resulting from high energy pipe breaks inside and outside containment upon nonsafety-related systems. Specifically, safety features required to mitigate the consequences of high energy pipe break and those required to obtain and maintain a safe shutdown following such an event were evaluated to determine if a single inappropriate actuation of an interfacing nonsafety-related system could unacceptably affect the required safety feature. TVA's conclusion is that although there is a possibility for disruptive signals to be generated, these are in every case acceptable because the operator will always have sufficient indication and time to take corrective action. Where appropriate, operating instructions have been modified as an additional precaution to preclude the event or to alert the operator to the possibility of the event.

Methodology

The following approach was used in analyzing the potential for disruption of required safety features by the consequential inappropriate actuation of interfacing nonsafety systems.

1. Required safety features for LOCA, main steam and feedwater, and other postulated high energy pipe rupture events were identified from the appropriate safe shutdown logic diagram. These required features were screened against a list of plant systems to determine if, functionally, sufficient interface existed between the required feature and the system to merit further evaluation. That is, without regard for the credibility of the event a single spurious actuation was postulated to occur anywhere within the system under consideration. As this spurious actuation was postulated, the question was asked, is there sufficient interface between the system and the required safety feature so that functionally there is potential for an unacceptable condition to exist. (See Table 7.3.2-1 for potential interaction matrix.)

2. All cases identified as potentially unacceptable in step one were subjected to an individual evaluation for credibility and acceptability. All nontrivial cases are discussed in the results.

Results

RCS Inventory and Pressure Control

The pressurizer PORVs might be subject to inappropriate opening due to environmental effects which could exist from high energy pipe breaks inside containment. Such inappropriate opening has been judged to be acceptable because (1) adequate annunciation is provided to alert the operator to the event, (2) adequate time is available for operator action, and (3) the control system design is such that operator action is possible.

RCS inventory and pressure control could also be jeopardized by inappropriate control circuit actuations which would lead to a reactor coolant pump (RCP) seal failure. Control system modifications have been made to both the component cooling water system, which supplies cooling to the pumps thermal barrier and to the chemical and volume control system (CVCS), which supplies seal injection water to assure seal integrity in the presence of fire-induced

spurious control system actuations. In that these modifications would also render the seals immune to damage due to pipe break induced inappropriate actuations, this feature was judged to be assured without further evaluation.

Steam Generator Inventory and Pressure Control

The control system for the SG power operated relief valves (PORVs), contained within the Distributed Control System (DCS), could be affected by high energy pipe breaks in the main steam valve room. This inappropriate opening is considered to be acceptable because (1) adequate annunciation is provided to alert the operator to the event, (2) adequate time is available for operator action, and (3) the control system design assures that the operator can override the inappropriate open signal. For a steamline break downstream of the flow restrictor coupled with a spurious opening of a steam generator power operated relief valve and its failure to close the steamline break analysis performed for a break upstream of the flow restrictor is bounding. Note: The design of the replacement steam generators includes an integral flow limiter in the main steam nozzle, which eliminates the potential for a main steam line break upstream of the flow restrictor.

An inappropriate opening of a main steam isolation valve bypass valve would defeat steam generator isolation. Normally the solenoids for these valves are deenergized (by handswitch position) after the valves are closed during plant startup.

ECCS Response

An inappropriate actuation of the reactor building auxiliary flow and equipment drain sump pump could jeopardize long term ECCS response by pumping water out of the ECCS active sump. This actuation is considered to be acceptable because (1) adequate indication is provided to alert the operator to the event, (2) adequate time is available for operator action, and (3) control system design is such that operator action is possible.

A number of other control circuits whose inappropriate actuation has the potential to disrupt ECCS response have been modified or de-energized as discussed in Section 7.6.6. In that this action would also prevent environmentally induced inappropriate actuations, these control systems were not evaluated further.

Other Safety Features

Inappropriate control system actuations within the Essential Raw Cooling Water (ERCW) system has the potential to disrupt a number of required Safety features. This system had been previously evaluated for unacceptable fire-induced inappropriate actuation. A number of cases were discovered where an inappropriate actuation would cause unacceptable load imbalance within the system. The modifications taken to preclude such fire-induced actuations would also make the control systems immune to pipe break environmental effects. Hence, the system was considered to be acceptable without further evaluation.

Additional Considerations

The study thus far has considered the system being evaluated as a target in the zone of influence of the postulated high energy pipe break. There are two cases where this evaluation has made use of previous efforts to control the zone of influence of the postulated event. The events, which are identified in the SQN pipe break analysis, are a RHR break in the 690 ft. elevation of the Auxiliary Building, and a break along the route of the auxiliary boiler steam line in the Auxiliary Building. Trainized temperature sensors have been provided to alert the operator of an adverse environment within the RHR pipe chase.

Conclusion

The conclusion of this evaluation is that a safe shutdown can be achieved at SQN even if a postulated accident is compounded by environmentally induced inappropriate control system actuation.

7.3.3 References

1. J. A. Nay, "Process Instrumentation for Westinghouse Nuclear Steam Supply Systems," WCAP 7547-L, March 1971 (Westinghouse NES Proprietary); and WCAP 7671, May 1971 (Nonproprietary).

2. The Institute of Electrical and Electronics Engineers, Inc., "IEEE Standard: Criteria for Protection Systems for Nuclear Power Generating Stations," IEEE Std. 279-1971.

3. D. N. Katz, "Solid State Logic Protection System Description," WCAP 7488-L, March 1971 (Nonproprietary).

4. J. Locante and E. G. Igne "Environmental Testing of Engineered Safety Features Related Equipment (NSSS - Standard Scope)," WCAP 7744, Volume 1, August 1971.

5. W. C. Gangloff and W. D. Loftus, "An Evaluation of Solid State Logic Reactor Protection In Anticipated Transients," WCAP 7706-L (Westinghouse NES Proprietary) and WCAP 7706 (Nonproprietary).

6. J. W. Swogger, "Testing of Engineered Safety Features Actuation System," WCAP 7705 Revision 1, February 1974.

7. E. P. Rahe, "Evaluation of Surveillance Frequencies and Out of Service Times for Engineered Safety Features Actuation System," WCAP 10271 Supplement 2, Feb. 1986 (Westinghouse NES Proprietary).

8. C. R. Tuley, "Westinghouse Setpoint Methodology for Protection Systems, Sequoyah Units 1 and 2," WCAP 11239, (Westinghouse Proprietary Class 2).

9. L. E. Erin, "Topical Report Eagle-21 Microprocessor-Based Process Protection System," WCAP-12374, September 1989 (Westinghouse Proprietary Class 2).

TABLE 7.3.1-1

INSTRUMENTATION OPERATING CONDITION
FOR ENGINEERED SAFETY FEATURES

No.	Functional Unit		No. of Channels	No. of Channels to Trip
1.	SAFETY INJECTION			
	a.	Manual	2	1
	b.	High Containment Pressure	3	2
	c.	Pressurizer Low Pressure	3	2
	d.	Low Steamline Pressure (Lead-Lag Compensated)	12 (3/steam line)	2/3 in any steamline
2.	CONTAINMENT SPRAY			
	a.	Manual	4**	2
	b.	Containment Pressure High-High	4	2

For interlocks/bypasses see Table 7.3.1-3

** Manual actuation is available using either of two sets (2 switches/ set). Two switches per set are utilized to prevent inadvertent spray actuation.

TABLE 7.3.1-2

INSTRUMENT OPERATING CONDITIONS FOR ISOLATION FUNCTIONS

No.	Functional Unit	No. of Channels	No. of Channels to Trip
1.	CONTAINMENT ISOLATION		
a.	Automatic Safety Injection (Phase A)	See Item No. 1 (b) through (d) of Table 7.3.1-1	
b.	Containment Pressure (Phase B)	See Item No. 2 (b) of Table 7.3.1-1	
c.	Manual Phase A & CVI Phase B & CVI	 2 See Item No. 2 (a) of Table 7.3.1-1	 1
2.	STEAM LINE ISOLATION		
a.	Low Steamline Pressure (Lead-Lag Compensated)	12* (3/Steamline)	2/3 in any Steamline
b.	High Steam Pressure Rate (Rate-Lag Compensated)	12** (3/Steamline)	2/3 in any Steamline
c.	Containment Pressure High-High	See Item No. 2 (b) of Table 7.3.1-1	
d.	Manual	1/loop	1/loop
3.	FEEDWATER LINE ISOLATION		
a.	Safety Injection	See Item No. 1 of Table 7.3.1-1	
b.	Steam Generator High-High Level 2/3 on any Steam Generator	12 (3/Steam Generator	2/3 on any 1/4 Steam Generator
4.	CONTAINMENT VENTILATION ISOLATION		
a.	Manual (See item 1.c above)		
b.	Containment Purge Air Exhaust Monitor Radioactivity-High	2	1
c.	Safety Injection	See Item No. 1 of Table 7.3.1-1	

* Permissible bypass if reactor coolant pressure is less than the P-11 setpoint.
** Automatically defeated above the P-11 permissive.

TABLE 7.3.1-3

INTERLOCKS FOR ENGINEERED SAFETY FEATURES ACTUATION SYSTEM

Designation	Input	Function Performed
P-4	Reactor trip	Actuates turbine trip
		Provides Feedwater Isolation Signal on T_{avg} below setpoint
		Prevents opening of main feedwater valves which were closed by safety injection or high steam generator water level
		Allows manual block of the automatic reactuation of safety injection
P-11	2/3 Pressurizer pressure below setpoint	Allows manual block of safety injection actuation on low pressurizer pressure signal.
		Allows manual block of safety injection and steamline isolation on low steamline pressure. Steamline isolation on high negative rate steamline pressure is permitted when this manual block is accomplished.
	2/3 Pressurizer pressure above Setpoint	Defeats manual block of safety injection actuation. Defeats manual block of safety injection and steamline isolation on low steamline pressure and defeats steamline isolation on high negative rate steamline pressure. Provides auto-open signal to SIS cold leg accumlator valves.
P-12	2/4 Low-Low T_{avg} below setpoint	Blocks condenser steam dump valves.
		Allows manual bypass of steam dump block for the cooldown condenser dump valves only.
		(Note) For the use of additional steam dump valves below the P-12 interlock, please refer to Section 10.4.4.3.
	3/4 low-low T_{avg} above setpoint	Defeats the manual bypass of steam dump block
P-14	2/3 Steam generator Hi-Hi water level above setpoint on any steam generator	Provides feedwater isolation signal
		Actuates turbine trip

TABLE 7.3.1-4 (Sheet 1)

ENGINEERED SAFETY FEATURES RESPONSE TIMES

INITIATING SIGNAL AND FUNCTION		RESPONSE TIME IN SECONDS
1.	Manual	
a.	Safety Injection (ECCS)	Not Applicable
	Feedwater Isolation	Not Applicable
	Reactor Trip (SI)	Not Applicable
	Containment Isolation-Phase "A"	Not Applicable
	Containment Ventilation Isolation	Not Applicable
	Auxiliary Feedwater Pumps	Not Applicable
	Essential Raw Cooling Water System	Not Applicable
	Emergency Gas Treatment System	Not Applicable
b.	Containment Spray	Not Applicable
	Containment Isolation-Phase "B"	Not Applicable
	Containment Ventilation Isolation	Not Applicable
	Containment Air Return Fan	Not Applicable
c.	Containment Isolation-Phase "A"	Not Applicable
	Emergency Gas Treatment System	Not Applicable
	Containment Ventilation Isolation	Not Applicable
d.	Steam Line Isolation	Not Applicable
2.	Containment Pressure - High	
a.	Safety Injection (ECCS)	≤ 37.0 (1)
b.	Reactor Trip (from SI)	≤ 3.0
c.	Feedwater Isolation	≤ 9.0 (2)
d.	Containment Isolation-Phase "A" (3)	≤ 18.0 (8) (15) / 28.0 (9)
e.	Containment Ventilation Isolation	≤ 5.5 (8) (13)
f.	Auxiliary Feedwater Pumps	≤ 60.0 (11)
g.	Essential Raw Cooling Water System (16)	≤ 60.0 (8) (15) / 75.0 (9)
h.	Emergency Gas Treatment System	≤ 38.0 (9)
3.	Pressurizer Pressure - Low	
a.	Safety Injection (ECCS)	≤ 37.0 (1) / 32.0 (7)(15)
b.	Reactor Trip (from SI)	≤ 3.0

TABLE 7.3.1-4 (Sheet 2)

ENGINEERED SAFETY FEATURES RESPONSE TIMES

INITIATING SIGNAL AND FUNCTION	RESPONSE TIME IN SECONDS
c. Feedwater Isolation	≤ 9.0 [2]
d. Containment Isolation-Phase "A" [3]	≤ 18.0 [8] [15]
e. Containment Ventilation Isolation	≤ 5.5 [8] [13]
f. Auxiliary Feedwater Pumps	≤ 60.0 [11]
g. Essential Raw Cooling Water System [16]	≤ 60.0 [8] [15] / 75.0 [9]
h. Emergency Gas Treatment System	≤ 28.0 [8] [15]
4. Deleted	
5. Negative Steam Line Pressure Rate - High	
a. Steam Line Isolation	≤ 8.0
6. Steam Line Pressure - Low	
a. Safety Injection (ECCS)	≤ 34.0[7][15] / 39.0[1]
b. Reactor Trip (from SI)	≤ 3.0
c. Feedwater Isolation	≤ 9.0 [2]
d. Containment Isolation-Phase "A" [3]	≤ 18.0 [8] [15] / 28.0 [9]
e. Containment Ventilation Isolation	Not Applicable
f. Auxiliary Feedwater Pumps	≤ 60.0 [11]
g. Essential Raw Cooling Water System [16]	≤ 60.0 [8] [15] / 75.0 [9]
h. Steam Line Isolation	≤ 8.0
i. Emergency Gas Treatment System	≤ 38.0 [9]
7. Containment Pressure -- High - High	
a. Containment Spray	≤ 250 [9]
b. Containment Isolation-Phase "B" [12]	≤ 65 [8] [15] / 75 [9]
c. Steam Line Isolation	≤ 7.0
d. Containment Air Return Fan	≥ 540.0 and ≤ 660

TABLE 7.3.1-4 (Sheet 3)

ENGINEERED SAFETY FEATURES RESPONSE TIMES

INITIATING SIGNAL AND FUNCTION	RESPONSE TIME IN SECONDS
8. Steam Generator Water Level -- High-High	
a. Turbine Trip	≤ 2.5
b. Feedwater Isolation	≤ 9.0 (2)
9. Main Steam Generator Water Level -- Low-Low	
a. Motor - driven Auxiliary Feedwater Pumps (4)	≤ 60.0 (14)
b. Turbine - driven Auxiliary Feedwater Pumps (5) (11)	≤ 60.0 (14)
10. Station Blackout	
a. Auxiliary Feedwater Pumps	≤ 60 (11)
11. Trip of Main Feedwater Pumps	
a. Auxiliary Feedwater Pumps	≤ 60 (11)
12. Loss of Power	
a. 6.9 kv Shutdown Board - Degraded Voltage or Loss of Voltage	≤ 10 (10)
13. RWST Level-Low Coincident with Containment Sump Level - High and Safety Injection	
a. Automatic Switchover to Containment Sump	≤ 250
14. Containment Purge Air Exhaust Radioactivity - High	
a. Containment Ventilation Isolation	≤ 10 (6)

TABLE 7.3.1-4 (Sheet 4)

NOTES

1. Diesel generator starting and sequence loading delays included. Response time limit includes opening of valves to establish SI path and attainment of discharge pressure for centrifugal charging pumps, SI and RHR pumps.

2. This isolation, accompanied by a reactor trip, is accomplished by closure of redundant valves in the piping to each steam generator and tripping of the main feedwater pumps. The air to open, spring to close, FW regulator valves will close within 7.0 seconds. The motor-operated containment FW isolation valves will close within 7.5 seconds. The FW bypass control valves will close within 8.0 seconds. The FW isolation response time, which includes closure time and all electronic delays of the FW regulator valves, the startup valves bypassing the FW regulator valves, and the FW isolation valves will be less than nine seconds.

3. The following valves are exceptions to the response times shown in the table and will have the values listed in seconds for the initiating signals and function indicated:

Valves:	FCV-26-240, -243	
Response times:	2.d.	21 (8) (15) / 31(9)
	3.d.	22 (8) (15)
	6.d.	21 (8) (15) / 31(9)
Valves:	FCV-61-96, -97, -110, -122, -191, -192, -193, -194	
Response times:	2.d.	31 (8)
	3.d.	32 (8)
	6.d.	31 (8)
Valve:	FCV-70-143	
Response times:	2.d.	61 (8) (15) / 71(9)
	3.d.	62 (8) (15)
	6.d.	61 (8) (15) / 71(9)

4. On 2/3 any Steam Generator

5. On 2/3 in 2/4 Steam Generator

6. Radiation detectors for Containment Ventilation Isolation may be excluded from Response Time Testing.

7. Diesel generator starting and sequence loading delays not included. Offsite power available. Response time limit includes opening and closing of valves to establish SI path and attainment of discharge pressure for centrifugal charging pumps.

8. Diesel generator starting and sequence loading delays not included. Response time limit includes operating time of valves.

9. Diesel generator starting and sequence loading delays included. Response time limit includes operating time of valves.

10. The response time for loss of voltage is measured from the time the diesel start signal is initiated until the time full voltage is restored by the diesel. The response time for degraded voltage is measured from the time the load shedding signal is generated, either from the degraded voltage or the SI enable timer, to the time full voltage is restored by the diesel. The response time of the timers is covered by the requirements on their setpoints.

TABLE 7.3.1-4 (Sheet 5)

11. The provisions of Technical Specification SR 3.0.4 are not applicable for entry into MODE 3 for the turbine-driven Auxiliary Feedwater Pump.

12. The following valves are exceptions to the response times shown in the table and will have the values listed in seconds for the initiating signals and the function indicated:

Valves:	FCV-67-89, -90, -105, -106	
Response times:	7.b.	75 (8) (15) / 85 (9)
Valve:	FCV-70-141	
Response times:	7.b.	70 (8) (15) / 80 (9)

13. Containment purge valves only. Containment radiation monitor valves have a response time of 6.5 seconds or less.

14 Does not include Trip Time Delays. Response times noted include the transmitters, Eagle-21 process protection cabinets, solid state protection cabinets, and actuation devices (up to and including pumps). This reflects the response times necessary for THERMAL POWER in excess of 50% RTP.

15. The response time shown is for system/valve response with normal equipment operating voltage available during periodic testing. Additional margin is included in the analysis to account for potential delays in achieving minimum equipment operating voltage.

16. The Essential Raw Cooling Water system 6.9 kv pumps are exceptions to the response times shown in the table and will have the values listed in seconds for the initiating signals and the function indicated:

Essential Raw Cooling Water System Pumps		
Response times:	2.g.	65.0 (8) / 75.0 (9)
	3.g.	65.0 (8) / 75.0 (9)
	6.g.	65.0 (8) / 75.0 (9)

TABLE 7.3.2-1

REQUIRED SAFETY FEATURE

Plant System	RCS Inventory and Pressure Control	SG Inventory and Pressure Control	ECCS Response	Reactivity Control	Long Term Heat Removal	Contain. Isol.	Control Rm. & Aux. Habitab. (HVAC)	EGTS Response
Main and Reheat Steam		X						
Extraction Steam								
Main and Auxiliary Feedwater		X						
Condensate		X						
Heater Drains and Vents								
Chemical and Volume Control	X		X					
Residual Heat Removal			X	X				
Safety Injection			X					
Ice Condenser Refrigeration								
Auxiliary Boiler								
Lube Oil								
Primary Water								
Chemical Cleaning								
Radiation Waste Disposal			X					
Condenser Circulating Water								
Raw Water								
Potable Water								
Fuel Oil					X			
Gland Seal								
Insulating Oil								
Carbon Dioxide								
Essential Raw Cooling Water	X		X		X			
Service Air								
Control Air								
Hydrogen								
Fire Protection								
Station Drainage								
Fuel Pool Cooling and Cleaning					X			
Demineralized Water								
Condenser Tube Cleaning								
Component Cooling Water	X		X		X			
Sampling								
Heating, Ventilating, and Air-Conditioning								

Figure One - Screening Matrix - Systems marked "X" functionally have the potential to interact with required safety features. These systems have been further evaluated to determine the existence of unacceptable environmentally-induced control system actuations.

7.4 SYSTEM REQUIRED FOR SAFE SHUTDOWN

The process signals and information necessary for safe shutdown are available from instrumentation channels that are associated with major systems in both the primary and secondary sides of the Nuclear Steam Supply System. These channels are normally aligned to serve a variety of operational functions, including startup and shutdown as well as protective functions.

The instrumentation and control capability which is identified as being required for maintaining safe shutdown of the reactor is by definition, the minimum under nonaccident conditions. This capability will permit the necessary operations that will:

1. Prevent the reactor from achieving criticality in violation of the Technical Specifications and

2. Provide an adequate heat sink such that design and safety limits are not exceeded.

The designation of systems that can be used for maintaining a safe shutdown by providing the necessary functions depends on identifying those systems which provide the following capabilities:

1. Boration.

2. Residual heat removal.

Discussions of the systems required for a safe shutdown, which are identified in Section 7.4.1, together with the applicable codes, criteria, and guidelines are contained in other sections of the Safety Analysis Report and the Fire Protection Report (see 9.5.1).

7.4.1 Description

7.4.1.1 Control Room Availability

The main control room is located in the Control Building, which is a Seismic Category I Structure, at elevation 732. The Main Control Room Ventilation System, is described in detail in Section 9.4.1, is designed to maintain habitability in accordance with GDC-19 during essentially all conditions.

Extensive fire in the Main Control Room or Control Building could, however, force its evacuation. In that unlikely event, control will be transferred to the Auxiliary Control Station located in the Auxiliary Building after tripping the reactor. The auxiliary controls provide a capability to bring the units to and maintain them at a safe shutdown condition. Auxiliary controls are discussed below and in the Fire Protection Report (see 9.5.1).

The construction materials used in the main control room are noncombustible. The main control boards are of steel and the internal surface is painted with a fire-retardant paint. Electrical wiring is flame resistant as shown by the vertical flame test as described in the Insulated Power Cable Engineer's Association, IPCEA, Publications and the American Society for Testing Materials, ASTM D 470-64T.

For details on the habitability systems of the main control room, see Section 6.4.

7.4.1.2 Auxiliary Controls

In case it becomes necessary to evacuate the main control room due to fire or smoke, the capability exists to establish and maintain the reactor(s) in a safe shutdown condition from locations outside the Main Control Room. This capability is discussed in the Fire Protection Report (See 9.5.1).

Each auxiliary control function is designed with a transfer switch to disconnect it from the main control room. Placing the transfer switch in the local operating position will give an annunciating alarm in the control room and will turn off the motor control position lights on the control room panel. For certain systems the purpose of this transfer switch is to prevent actuation of the system due to a spurious signal caused by fire. Any exceptions to the above are evaluated and documented on design criteria SQN-DC-V-2.17 and SQN-DC-V-12.2.

7.4.1.3 Systems Available for Hot Shutdown

System and instrumentation required for fire safe shutdown is described in the Fire Protection Report (see 9.5.1).

To achieve and maintain hot shutdown for various nonaccident reactor conditions, essential control functions are provided both inside and outside the main control room for the following systems:

	System	FSAR Reference Section
1.	Reactor Coolant System	Chapter 5
2.	Chemical and Volume Control System	Section 9.3.4
3.	Residual Heat Removal System	Section 5.5.7
4.	Component Cooling System	Section 9.2.1
5.	Main Steam System	Section 10.3
6.	Ventilation System	Section 9.4
7.	Essential Raw Cooling Water System	Section 9.2.2
8.	Auxiliary Feedwater System	Section 10.4.7.2
9.	Diesel Generators	Chapter 8

In addition to the functions indicated above, the turbine may be tripped in the main control room or at the turbine; the reactor may be tripped in the main control room, the 480V MG set breakers, or at the reactor trip switchgear; and all automatic systems (unless damaged by fire) continue functioning as discussed in Section 7.3.

7.4.1.3.1 Main Controls

The indicators and controls available in the main control rooms are discussed in Section 7.1.4.

7.4.1.3.2 Auxiliary Controls

The indicators and controls available outside of the main control room are described in this section.

1. Reactor Coolant (RC) System

   The following information is available to the operator in the auxiliary control room:

   a. RC temperature.
   b. Pressurizer pressure.
   c. Pressurizer level.
   d. Pressurizer relief tank level (Unit 2 only).
   e. Pressurizer relief tank pressure.

Controls for the RC pumps, the oil-lift pumps, the valves necessary to vent the pressurizer, and the safety related pressurizer heaters are available outside of the main control room.

2. Chemical and Volume Control System

The following functions and equipment are available to the operator from outside the main control room:

a. Charging and letdown flow.
b. Demineralizer bypass.
c. Divert flow to the holdup tank.
d. Charging pumps.
e. Boric acid tank flow.
f. Seal flow.

3. Residual Heat Removal (RHR) System

To achieve and maintain hot shutdown, the only function required of this system is to ensure closure of the RHR isolation valves.

4. Component Cooling System (CCS)

Controllers for the following functions and equipment are located outside the main control room:

a. The main CCS pumps.
b. The booster pumps.
c. Header flow control valves.
d. Diversion valves to the component coolers.

5. Main Steam System

The steam generator pressures are displayed in the auxiliary control room. The steam flow to the auxiliary feed pump turbine, the operation of the power relief valves, and the cessation of blowdown and sampling can be controlled from the panels outside the main control room.

6. Ventilation System

The containment pressure is displayed on auxiliary control panels for both units.

The controllers needed to control the lower compartment cooler units, the control rod driver cooler units, and the recirculation valves are located on panels outside the main control room.

7. Essential Raw Cooling Water (ERCW) System

From outside of the main control room, the operator has control of the following:

a. ERCW pumps.
b. Header flow.
c. Header isolation.
d. Header pressure.
e. Header valves.
f. Cooler discharge flow valves.

8. Auxiliary Feedwater (AFW) System

   Panels outside the main control room contain the displays and controls for the following equipment and functions:

   a. AFW pumps.
   b. ERCW supply to AFW isolation valves.
   c. Steam generator level control.
   d. AFW pump discharge pressure.
   e. Steam generator levels.
   f. AFW flow to each steam generator.
   g. Total turbine-driven pump header flow.

   The steam generator levels are provided by two channels of instrumentation.

9. Diesel Generators

   The operator has the ability to initiate emergency start and emergency stop of the diesel generators from outside the main control room.

7.4.1.4 Systems Available for Cold Shutdown

The systems available to achieve and maintain hot shutdown are available also for cold shutdown.

7.4.1.4.1 Main Controls

The indicators and controls available in the main control room are discussed in Section 7.1.4.

7.4.1.4.2 Auxiliary Controls

In addition to the functions that are available outside the main control room discussed in Section 7.4.1.3.2, the operator is provided with control of the following RHR functions and equipment:

1. RHR valves from the RCS.
2. RHR pumps and miniflow.
3. RHR header and cross-tie flow.
4. RHR flow and temperature.

To achieve cold shutdown the operator must be able to defeat the safety injection signal trip circuit and close the accumulator isolation valves or vent the accumulators to decrease their pressure. The instrumentation and controls for certain systems may require some modification or repair in order that their functions may be performed outside the control room. Note that the plant design does not preclude attaining the cold shutdown conditions from outside the control room. An assessment of plant conditions can be made in order to attain cold shutdown. During such time the plant could be safely maintained at hot shutdown condition.

7.4.1.5 Additional Systems Available Outside the Main Control Room

The following systems are not required for safe shutdown but are provided with controls both inside and outside the main control room so essential functions can be maintained:

1. Containment Spray System, Section 6.2.2.
2. Safety Injection System, Section 6.3.
3. Waste Disposal System, Chapter 11.

7.4.1.5.1 Main Controls

The indicators and controls available in the main control room are discussed in Section 7.1.4.

7.4.1.5.2 Auxiliary Controls

1. Containment Spray System

   The controls for the containment spray pumps, the spray header flow valves, and the supply valves are available outside the main control room.

2. Safety Injection System

   From panels located outside the main control room, the following functions and equipment can be controlled:

   a. Accumulator tank pressure.
   b. Accumulator tank level.
   c. Flow to the cold legs of the RC System.
   d. Accumulator tank to RCDT flow.
   e. Flow to the RHR heat exchangers.
   f. SIS pumps.
   g. Flow from the refueling water storage tank.
   h. Flow to the CCP injection tank.
   i. Containment sump discharge.

3. Waste Disposal System

   The Gaseous and Liquid Processing Systems panels are local panels located in the Auxiliary Building. The sump pump and isolation valves are controlled from panels in the vicinity of the auxiliary control room.

7.4.2 Analysis

Hot shutdown is a stable plant condition, automatically reached following a plant shutdown. The hot shutdown condition can be maintained safely for an extended period of time either automatically or manually. In the unlikely event that access to the control room is restricted, the plant can be safely kept at hot shutdown or taken to cold shutdown by the use of the monitoring indicators and the controls listed in Sections 7.4.1.3 and 7.4.1.4. These indicators and controls are provided outside as well as inside the control room.

The safety evaluation of the maintenance of a shutdown from the main control room has included consideration of the accident consequences that might jeopardize safe shutdown conditions. The accident consequences that are germane are those that would tend to degrade the capabilities for boration, adequate supply for auxiliary feedwater and residual heat removal.

The results of the accident analyses are presented in Chapter 15. Of these, the following produce the most severe consequences that are pertinent:

1. Uncontrolled boron dilution.
2. Loss of normal feedwater.
3. Loss of external electrical load and/or turbine trip.
4. Loss of all alternating current power to the station auxiliaries (station blackout).

It is shown by these analyses that safety is not compromised by these incidents with the associated assumptions being that the instrumentation and controls indicated in Section 7.1.4 are available to control and/or monitor shutdown. These available systems will allow a maintenance of hot shutdown even under the accident conditions listed above which would tend toward a return to criticality or a loss of heat sink.

Fire-Safe shutdown Analysis is discussed in the Fire Protection Report (see 9.5.1).

7.5 SAFETY-RELATED DISPLAY INSTRUMENTATION FOR POSTACCIDENT MONITORING (PAM)

7.5.1 Description

7.5.1.1 System Description

Post Accident Monitoring (PAM) instrumentation is required to monitor plant and environment conditions during and following design basis Condition II, III and IV faults as described in FSAR Chapter 15. PAM will enable the Main Control Room (MCR) operating staff (operator) to take preplanned manual actions, provide information on whether critical safety functions are being accomplished, provide information for potential or actual breach of the barriers to fission product release, provide information of individual safety systems, and provide information on the magnitude of the release of radioactive materials.

Table 7.5-2 lists the process information required at the initiation of an accident, during the course of an accident, and until the unit is in cold shutdown following an accident. The variables were selected through a systematic evaluation of parameters required for the mitigation of design basis events, a comprehensive review of the Emergency Instructions (EIs), Function Restoration Guidelines (FRGs), and Condition II, III and IV faults in Chapter 15 of the FSAR. In some cases, the EIs and FRGs address mitigation of events which may extend beyond the design basis of the plant. Instrumentation used for beyond design basis events may be exempted from being PAM instrumentation. Table 7.5-2 furnishes the 5 appropriate variable classification types/categories for each variable description. PAM variable types/categories were determined using the guidance given in U.S. NRC Regulatory Guide 1.97 R2.

7.5.1.2 Variables Types

Five (5) classifications of variable types, A, B, C, D, and E were identified to provide the PAM instrumentation. Those classifications meet the PAM classification contained in Regulatory Guide 1.97 R2. These five classifications are not mutually exclusive, in that, a given variable (or instrument) may be included in one or more types. When a variable is included in more than one of the classifications, the equipment monitoring this variable meets the more stringent qualification category requirements as noted in Table 7.5-1.

Type A Variables

Those variables that provide primary information to the MCR operators to allow them to take preplanned manually controlled actions for which no automatic action is provided and that is required for safety systems to accomplish their safety functions for Chapter 15 design basis events.

Type B Variable

Those variables that provide information to indicate the accomplishment of critical safety functions.

Type C Variable

Those variables that provide information to indicate the potential for being breached or the actual breach of the barriers to fission product release. The barriers to fission product release are fuel cladding, reactor coolant pressure boundary, and primary reactor containment.

Type D Variable

Those variables that provide information to indicate the operation of individual safety systems and other systems important to safety.

Type E Variable

Those variables used in determining the magnitude of the release of radioactive materials and for continuously assessing such releases.

7.5.1.3 Variables Categories

The five types of variables are functionally classified into three (3) qualification categories (1, 2, and 3) according to the safety function provided by that variable. Description of the three categories are given below. Table 7.5-1 briefly summarizes the qualification criteria of the three designated categories.

The differentiation in the 3 categories was made in order that importance of information hierarchy could be recognized in specifying accident monitoring instrumentation. Category 1 instrumentation has the highest pedigree and should be utilized for information which is essential to the Main Control Room operating staff in order for them to determine if the plant critical safety functions are being performed. Category 2 and 3 instruments are of lesser importance in determining the state of the plant and do not require the same level of operational assurance.

The primary differences between category requirements are in the qualification, application of single failure, power supply and display requirements. Category 1 requires class 1E, seismic and environmental qualification, the application of a single failure criteria, utilization of emergency standby power and continuous display. Category 2 requires emergency standby power and environmental qualification, but does not require class 1E qualification or the application of the single failure criteria. Category 2 requires, in effect, a rigorous performance verification for a single instrument channel. Category 3 does not require qualification, single failure criteria, emergency standby power or an immediately accessible display.

7.5.2 Design Basis

7.5.2.1 Selection Criteria

Type A variables are key variables and are designated Category 1. Type B and C variables are determined to be either a key or a backup variable depending on their particular usage. Those variables determined to be key shall be classified as Category 1 except for those classified as Category 2 in accordance with the specific guidance presented in Regulatory Guide 1.97, Table 2. Most backup variables are considered Category 3. The type D and E variables determined to be key shall be classified as Category 2 except for those classified as Category 1 in accordance

with the specific guidance presented in Regulatory Guide 1.97, Table 2. Most backup variables are considered Category 3. Differences between this general guidance and the variables given in Table 7.5-2 are addressed in the deviations (reference 3, 5, and 12).

The variable categories were determined through, (1) the guidance given in Regulatory Guide 1.97, Table 2, (2) a review of the SQN Emergency Instructions and Functional Restoration Guidelines and, (3) a safety analysis performed for the FSAR Chapter 15 design basis accidents. These three steps insure that sufficient instrumentation is available to the operator to keep the plant in a safe condition under accident scenarios.

7.5.2.2 Design Criteria

7.5.2.2.1 Category 1 Variables

A. Redundant Class 1E qualified continuous indication of these variables has been provided. Qualification applies from the sensor to the display. The variables have been provided with a minimum of two independent channels (PAM 1 and PAM 2) for monitoring each variable. These two channels of two diverse or redundant variables allow the operator to deduce actual plant conditions.

   Where failure of a channel would present ambiguous or confusing information to the operator, preventing the operator from taking action or misleading the operator, an additional (PAM 3) channel has been provided. The PAM 3 channel may be an additional (redundant) or an independent channel to monitor a different variable that bears a know relationship to the multiple channels (diverse). The third channel has been qualified to the same requirements as the first two channels. Table 7.5-2 lists the redundancy requirements for each Category 1 variable.

B. PAM instrumentation has components and cables environmentally qualified and installed to function in plant conditions for which they are expected to operate. Qualification is in accordance with 10 CFR 50.49 using the guidance described in NUREG 0588 in accordance with RG 1.89.

C. PAM instrumentation is designed to function after a design basis seismic event.

D. Transmission of signals from PAM Category 1 devices to non-qualified equipment is only through an isolation device qualified to the same requirements as Category 1. No credible failure at the output of the isolation device prevents the monitoring channel from meeting its minimum performance requirements.

E. Category 1 instrumentation is capable of operating independently of offsite power, and is normally backed up by batteries. The instrumentation can be backed up by the emergency diesel generators if shown through analysis that the indication is not required by the operator during the time for the diesels to come up to speed and tie on to the Auxiliary Power System. The physical separation between redundant channels has been preserved in field wiring by combining outputs from Train A or channels from instrumentation cabinets I or III into the PAM 1 channels. The redundant PAM 2 channels are from Train B or channels from instrumentation cabinets II or IV.

F. Category 1 analog variables are trended on the plant computer system. In addition to the plant computer system, a hardwire recorder for at least one instrument loop of the variable has been provided when the trending of Category 1 variables enhances the operators' ability to cope with mitigating various design basis events. To increase reliability, the power supplies for these recorders must be arranged so that no single failure will result in the loss of both the plant computer system and recorder trending. The notes in Table 7.5-2 show which variables require a trend recorder. The trending portion of the PAM channel has met Category 1 qualification requirements unless isolation has been provided. Where isolation exists, the trending portion of the PAM channel has met Category 2 requirements.

G. Category 1 variables follow quality assurance requirements as described in Chapter 17 for safety related devices.

7.5.2.2.2 Category 2 Variables

A. Redundant or Class 1E circuitry is not required for Category 2 variables. However, the parent system may require the instrumentation to be classified 1E for non-PAM functions. Where this instrumentation has been used to provide PAM Category 2 indication, the Class 1E qualification applies from the sensor through the isolator/buffer. The display need not meet Class 1E requirements.

B. PAM instrumentation has components and cables environmentally qualified and installed to the plant conditions for which they are expected to operate. Nondivisional and Class 1E PAM instrumentation located in a harsh environment has been qualified in accordance with 10 CFR 50.49 using the guidance described in NUREG 0588. Mild environment Category 2 components do not have any special qualification requirements.

C. There are no specific requirements for seismic operability. However, specific system requirements above that required for PAM may exist. In those cases, the most restrictive qualification level applies. In addition, components are designed and mounted such that they do not have an adverse effect on safety systems during a seismic event.

D. Category 2 instruments are powered from highly reliable power sources, not necessarily divisional power, and are diesel generator or battery backed.

E. Potential plant release point effluent radioactivity monitors, area radiation monitors, and associated instrumentation are trended on a MCR recorder or on the plant computer system.

F. Category 2 instrumentation located in a harsh environment follow quality assurance requirements as described in Chapter 17 for safety related devices.

7.5.2.2.3 Category 3 Variables

A. PAM instrumentation is high-quality commercial grade equipment. No redundancy, qualification, or signal isolation is required.

B. Category 3 PAM loops are powered from normal station power supplies (such as, non-divisional power).

C. Components are designed and mounted such that they do not have an adverse effect on safety systems during a design basis seismic event. Instruments that are not part of a safety related system are not seismically qualified unless Sequoyah's FSAR invokes seismic requirements for the associated system.

D. The meteorology monitors are trended on the plant computer system.

7.5.2.3 General Requirements

7.5.2.3.1 Display Requirements

Category 1 parameters are displayed on individual devices located in the Main Control Room.

Category 2 and 3 devices are normally either displayed on individual instruments located in the Main Control Room or processed for display by the plant computer system.

Portable or postaccident sampling devices are not displayed in the Main Control Room. In addition, a limited number of Category 2 and 3 devices are displayed on local panels if the following guidelines are met:

1. The information displayed is of a non-critical or diagnostic nature.

2. The local panel display is accessible under accident conditions.

3. The information can be retrieved in a time frame necessary to support the operator's action.

4. The parameter changes slowly such that only infrequent updates are needed.

Human factors principles have been used in determining the type and location of the displays. To the extent practical, the same instruments were used for accident monitoring as are used for the normal operations of the plant to enable the operators to use instruments which they are most familiar during accident situations. To the extent practical, monitoring instrumentation is from sensors that directly measure the desired variables. Indirect measurements are made only when it can be shown by analysis to provide equivalent or unambiguous information. The PAM parameters have associated required accident ranges. The minimum required ranges are given in Table 7.5-2. Typically, the range of the instrumentation is sufficient to keep the indication on scale at all times. Where the required range of monitoring instrumentation results in a loss of instrumentation sensitivity or accuracy in the normal operating range by using a single instrument (such as radiation monitors), multiple instruments are used to encompass the entire required range. Where two or more instruments are needed to cover a particular range, overlapping of instrument spans have been provided to ensure one of the two instruments will be on scale at all times.

7.5.2.3.2 Identification

The Category 1 and 2 displays are uniquely identified on the Main Control Board so that the operator can easily discern that they are intended for use under accident conditions. PAM Category 1 display devices have been identified with a nameplate with black background, white letters and the symbol C1 inscribed on the nameplate. PAM Category 2 variable display devices (which are not also PAM Category 1) have been identified with a nameplate with a white background, black letters with the symbol C2 inscribed on its nameplate.

Category 1 indicators are identified on the control diagrams, drawing series 47W610, as P1 and P2 (as well as P3 when a third redundant channel is required) respectively to denote each redundant train of instrumentation.

7.5.3 Analysis

For Condition II, III and IV events sufficient duplication of information is provided to ensure that the minimum information required is available. The information is part of the operational monitoring of the plant which is under surveillance by the operator during normal plant operation. This is functionally arranged on the Main Control Board to provide the operator with a ready understanding and interpretation of plant conditions.

The variables identified in Table 7.5-2 were selected on the basis of sufficiency and availability during and subsequent to an event for which they are necessary.

Redundant Class 1E sensors are provided to develop the necessary information to enable the required manual functions to be performed following a Condition IV event. These sensors are environmentally and seismically qualified.

Range and accuracy requirements are determined through the analysis of Condition II, III or IV events as described in FSAR Chapter 15. The display system meets the following requirements.

a. The range of the readouts extends over the maximum expected range of the variables being measured.

b. The combined indicated accuracies are within the errors used in the safety analysis.

As described throughout FSAR Section 7.5, SQN meets the intent of NRC Regulatory Guide 1.97, R2. Any deviations from the Regulatory Guide have been identified to the NRC (References 3, 4, and 5) and have been accepted by the NRC (References 10 and 11).

Other information systems such as the plant computer are integrated with the PAM instrumentation described in this section. In order to provide the operator adequate information to prevent and/or cope with events, those displays have been included in Human Factors engineering review.

7.5.4 Tests and Inspections

7.5.4.1 Programs

Services, testing and calibration programs are performed on at least an 18 month or refueling outage intervals for category 1 variables to maintain the capability of the monitoring instrumentation with one exception. The category 1 AFW Flow, AFW LCV Position, and SG level variables are calibrated at a frequency in accordance with the Surveillance Frequency Control Program (SFCP). For those instruments where the required interval between testing is less than the normal interval between station shutdowns, a capability for testing during operation is provided. Services, testing and calibration programs for category 2 and 3 variables may exceed the 18 month or refueling outage intervals based on guidance provided within Reference 1.

7.5.4.2 Removal of Channels from Service

Whenever a means for removing channels from service are included in the design, the design facilitates administrative control for such removal. The system is designed to permit at least one channel to remain operable when required during power operation. During service removal, the active parts of the channel need not continue to meet the single failure criteria. As such, monitoring systems comprised of two redundant channels are permitted to violate the single failure criterion during channel bypass. The bypass time interval allowed for category 1 variables is specified in the plant technical specifications.

7.5.4.3 Administrative Control

The design facilitates administrative control of the access to all setpoint adjustments, module calibration adjustments and test points.

7.5.5 References

1. U. S. NRC Regulatory Guide 1.97, Rev. 2 (December 1980) "Instrumentation for Light-Water-Cooled Nuclear Power Plants to Assess Plant and Environs Conditions During and Following an Accident."

2. NUREG 0737 Supplement 1 (Generic Letter 82-33), "NRC Staff Recommendations on Requirements for Emergency Response Capability," December 17, 1982.

3. TVA letter to NRC dated May 7, 1990, "Sequoyah Nuclear Plant (SQN) - Regulatory Guide (RG) 1.97 - Finalized Program." (L44900507804)

4. TVA letter to NRC dated September 14, 1989, "Sequoyah Nuclear Plant (SQN) - Response to NRC Questions Concerning SQN's Regulatory Guide (RG) 1.97 Commitments." (L44890914801)

5. TVA letter to NRC dated June 11, 1991, "Sequoyah Nuclear Plant (SQN) - Permanent Deviation from Regulatory Guide (RG) 1.97 - Shield Building (SB) Stack Instrumentation." (L44910611801)

6. "General Design Criteria for Nuclear Power Plants," Appendix A to Title 10 CFR 50, Criterion 13, 19, and 64.

7. Calculation SQN-EEB-PS-PAM-0001, "PAM Variable Data-Base."

8. TVA letter to NRC dated August 14, 1985, "Sequoyah Nuclear Plant (SQN) - Response to NRC Questions Concerning Information on NUREG-0737 for Inadequate Core Cooling Instrumentation." (L44850814807)

9. SQN Design Criteria, SQN-DC-V-2.15, "Containment Isolation System."

10. U.S. NRC Safety Evaluation Report on Conformance to Regulatory Guide 1.97, August 22, 1991. (A02910826002)

11. U.S. NRC Safety Evaluation Related to Accumulator Pressure and Level Instrumentation Relaxation of Regulatory Guide 1.97 Environmental Qualification Requirements, May 13, 1992. (A02920519013)

12. Safety Evaluation SA/SE-SQN-EEB-PS-TI28-0042 (B37 930930 007), Justification for SB Stack Instrumentation Factor of 2 Accuracy Applies from 500 to 28,000 cfm Flow Range.

TABLE 7.5-1

SUMMARY OF QUALIFICATION CRITERIA
FOR POSTACCIDENT MONITORING

Criteria	Category 1	Category 2	Category 3
Redundancy	Yes	N/A	N/A
EQ	Per 10 CFR 50.49 as described in SQN FSAR Chapter 3	Equipment in harsh environment same as Category 1; N/A for equipment in mild environment	N/A
Seismic	Must function after seismic event as described in Chapter 3	N/A	N/A
QA	Yes - as given in Chapter 17 for safety related devices	Yes - for all items requiring EQ above; No - for the remainder	N/A
Power Supply	Class 1-E as described in Chapter 8	Non-1E instrument power	Non-1E
Physical Separation	Yes - per design basis of the plant	N/A	N/A
Electrical Separation	Yes - Non-1E circuit inter-faces are through qualified isolation devices	N/A	N/A
Indication	Hardwired Indicator	Indicator, computer or indication light	Indicator, computer, indicating light, or alarm
Special Labeling on MCR Board	Yes	Yes	No
Testing and Maintenance	Yes	Yes	Yes
Isolation Device Accessibility	Yes	N/A	N/A
Trending	All analog variables trended on the plant computer are qualified to Category 2 requirements	Recorder or computer Rad monitors and associated instru-ments; N/A for the remainder	Plant computer system for meterological; N/A for the remainder

SQN

TABLE 7.5-2 (Sheet 1)

TABLE OF VARIABLES FOR POST ACCIDENT MONITORING

Variable Description	Type/ Category	Minimum Range From	Minimum Range To	Redundancy Required	Notes
120 VAC Vital Instr Bus Voltage	D2	0	150 VAC	N/A	RG1.97 R2 - POWER SUPPLY
125 VDC Vital Batt Bd Amps	D2	-200	600 DC Amps	N/A	RG1.97 R2 - POWER SUPPLY
125 VDC Vital Batt Bd Volts	D2	75	150 VDC	N/A	RG1.97 R2 - POWER SUPPLY
480 V SDBD Voltage	D2	0	600 VAC	N/A	RG1.97 R2 - POWER SUPPLY
6.9KV SDBD Amps	D2	0	800 AC Amps	N/A	RG1.97 R2 - POWER SUPPLY
6.9KV SDBD Voltage	D2	0	7600 VAC	N/A	RG1.97 R2 - POWER SUPPLY
AFW Flow	A1 D2	0 0	110% (Design) 242 GPM	2/Injection Line	See Deviation No. 4 AFW LCV Pos Serves as a diverse second channel
AFW LCV Position	A1	Closed	Not Closed	3 LCVs/ Injection Line	See Deviation No. 4 Serves as a deverse second Channel for AFW Flow
Airborne Radiohalogens and Particulates	E3	1E-9	1E-3 uCi/CC	N/A	
Annulus Pressure	D2	0	-5 Inches WG	N/A	
Atmos Stability-Vertical Temp Diff	E3	-5	10 Deg C	N/A	
Aux Bldg EXH Vent Flow	E2	0 0	100% (Design) 220,000 CFM	N/A	See Deviation No. 25
Aux Bldg EXH Vent Rad Level-Noble Gas	E2	1E-6	1E-2 uCi/CC	N/A	See Deviation No. 13

TABLE 7.5-2 (Sheet 2)

TABLE OF VARIABLES FOR POST ACCIDENT MONITORING

Variable Description	Type/ Category	Minimum Range From	Minimum Range To	Redundancy Required	Notes
Aux Bldg EXH Vent Rad Level - Particulates & Halogens	E3	1E-9	1E-4 uCi/CC	N/A	See Deviation No. 14 Remote Analysis Utilizing Removable Filter May be Used.
Aux Bldg Passive Sump (FLR & EQP DRN SMP) LVL	C3	SEE NOTES		N/A	Low & Hi Level Alarm in MCR
AUX Bldg Pressure	D2	-0.5	+0.5 Inches WG	N/A	
AUX Cntl Air Sys Pressure	D2	0	125 Psig	N/A	RG1.97 R2 - POWER SUPPLY
Boron Injection Flow	D2	0	110% (Design)	N/A	
(Flow in HPI System)		0	864 GPM		
Component Cooling Sys Surge Tank Level	D3	0 0	100% 10,000Gal	N/A	Actual Range 0 to 124 Inches
Component Cooling Water Flow to ESF Equip	D2	0 0	110% (Design) 5523 GPM	N/A	
Component Cooling Water Temp to ESF Equip	D2	30	130 DEG F	N/A	See Deviation No. 7
Condenser (Air Removal Sys) Vacuum EXH Flow	E2	0 0	110% (Design) 49.5 CFM	N/A	
Condenser (Air Removal Sys) Vacuum EXH RAD Level - Noble Gas	B3 C3 E2	1E-6	1E4 uCi/CC	N/A	Part of Sec Side RAD Lvl
Condensate Storage Tank Water Level	D2	0	367,000 GAL	N/A	Safety Source is-ERCW See ERCW to AFW Valve Position

TABLE 7.5-2 (Sheet 3)

TABLE OF VARIABLES FOR POST ACCIDENT MONITORING

Variable Description	Type/ Category	Minimum Range From	Minimum Range To	Redundancy Required	Notes
Containment Air Return Fan Status (Heat Removal - CNTMT Fan Sys)	D2	ON	OFF	N/A	
Containment Area Radiation - Lower	A1 B1 C1 E1	1	1E8 RADS/HR	2 Channels	
Containment Area Radiation - Upper	A1 B1 C1 E1	1	1E8 RADS/Hr	2 Channels	
Containment Atmosphere Temp	D2	40	400 DEG F	N/A	
Containment H2 Concentration	B3 C3	0	10%	2 Channels	See Deviation No. 2
Containment Iso Vlv Position* * Main FW Iso Vlv and main steam isolation bypass valve position indication not required for FWLB inside Main Steam Valve Vaults Ref. FSAR 15.4.7.57	B1 C3 D2	CLOSED	NOT CLOSED	1/VLV INBOARD/OUTBOARD	See Deviation No. 21 Specific valves per SQN-DC-V-2.15
Containment Pressure (NR)	A1 B1 C1	-1 -1	Design P 13 PSIG	2 Channels	See Deviation No. 26
Containment Pressure (WR)	B1 C1	10 PSIA -4.7 PSIG	4 x Design 48 PSIG	2 Channels	
Containment Spray Flow	D2	0 0	110% (Design) 5250 GPM	N/A	
Containment Spray HX Inlet Temp	D2	50	200 Deg F	N/A	
Containment Spray HX Outlet Temp	D2	50	200 Deg F	N/A	

TABLE 7.5-2 (Sheet 4)

TABLE OF VARIABLES FOR POST ACCIDENT MONITORING

Variable Description	Type/ Category	Minimum Range From	Minimum Range To	Redundancy Required	Notes
Containment Spray Suct Vlv Pos	D3	CLOSED	NOT CLOSED	N/A	
Containment Sump Water Level (WR)	A1 B1 C1 D2	0 0	577,763 Gals 100%	2 Channels	Actual range 0-20ft
Containment Sump Water Temp	D2	50	400 Deg F	N/A	RHR HX Inlet Temp
Control Rod Position	B3	Full In	Not Full In	N/A	
Core Exit Temperature	A1 B1 C1	200	2300 Deg F	2 Channels Each 1/Quandrant	Trend Recorder Required
CVCS Letdown Flow - Out	D3	0 0	110% (Design) 132 GPM	N/A	See Deviation No. 19
CVCS Makeup Flow - In	D3	0 0	110% (Design) 165 GPM	N/A	See Deviation No. 18
Diesel Gen Fuel Oil Day Tank Level	D3	See Notes		N/A	Low Level Alarm in MCR
Diesel Gen Starting Air Press	D3	See Notes		N/A	Low Pressure Alarm in MCR
Diesel Gen Wattmeter	D2	0	4.85 MW	N/A	RG1.97 - Power Supply
ECCS Vlv Alignment for Recirc	D3	Closed	Not Closed	N/A	
Emergency Boration Flow (Boric Acid Charging Flow)	D2	0 0	110% (Design) 82.5 GPM	N/A	
Emergency Vent Damper Position	D2	Open	Closed	N/A	

TABLE 7.5-2 (Sheet 5)

TABLE OF VARIABLES FOR POST ACCIDENT MONITORING

Variable Description	Type/ Category	Minimum Range From	Minimum Range To	Redundancy Required	Notes
ERCW HDR Flow	D2 E2	0	17,600 GPM Unit 2 8,000 GPM Unit 1	N/A	
ERCW Radiation Level	C2 E2	1E-5	1E-2 uCi/CC	N/A	
ERCW Supply Temp	D2	32	90 Deg F	N/A	
ERCW to AFW Vlv Pos	D1	Closed	Not Closed	1 VLV (2 VLV/INJ Line)	RG1.97 - CST Level
H2 Ignitor Status	D3	ON	OFF	N/A	
Main FW Flow	D3	0 0	110% (Design) 4.25E6 LB/HR	N/A	
Main STM Flow	D2 E2	0	4.3E6 LB/HR	N/A	
Main STM Line RAD Level	B3 C3 E2	1E-1	1E3 uCi/CC	N/A	Part of Sec Side RAD Level
Main STM (Relief VLV) PORV Position	D2	CLOSED	NOT CLOSED	N/A	
MCR Area Radiation Level	D2	1E-1	1E4 mRADS/HR	N/A	
MCR Pressure	D3	0	+0.5 Inches H20	N/A	Indicator in M/E Equip RM
Neutron Flux Monitoring	A1 B1	1E-6 %	100% (Full PWR)	2 Channels	Trend Record Required
Plant and Environs Radioactivity - PORT Inst	E3	See Notes		N/A	Multichannel GAMMA-Ray Spectrometer
Plant, Environs RAD-PORT Inst (BETA)	E3	1E-3	1E4 RADS/HR	N/A	

TABLE 7.5-2 (Sheet 6)

TABLE OF VARIABLES FOR POST ACCIDENT MONITORING

Variable Description	Type/ Category	Minimum Range From	Minimum Range To	Redundancy Required	Notes
Plant, Environs RAD-PORT Inst (Low Energy Photons)	E3	1E-3	1E4 RADS/HR	N/A	
Plant, Environs RAD-PORT Inst (Photons)	E3	1E-3	1E4 RADS/HR	N/A	
PAS, containment Air GAMMA Spectrum	E3	See Notes		N/A	Isotopic Analysis
PAS, Containment Air H2 Content	E3	0	30%	N/A	
PAS, Containment Air Oxygen Content	E3	0	30%	N/A	
PAS, Primary Coolant & Sump Boron Content	E3	50	6000 PPM	N/A	See Deviation No. 28 Also used for RCS boron
PAS, Primary Coolant & Sump Chloride Content	E3	0.1	20 PPM	N/A	
PAS, Primary Coolant & Sump Dissolved H2 or Total Gas	E3	10	2000 cc(STP)/kg	N/A	See Deviation No. 22
PAS, Primary Coolant & Sump Dissolved Oxygen	E3	0.1	20 PPM	N/A	On-Line Monitoring
PAS, Primary Coolant & Sump GAMMA Spectrum	E3	See Notes		N/A	Isotopic Analysis
PAS, Primary Coolant & Sump Gross Activity	E3	10	1E7 uCi/ml	N/A	Also used for RCS gross activity

TABLE 7.5-2 (Sheet 7)

TABLE OF VARIABLES FOR POST ACCIDENT MONITORING

Variable Description	Type/ Category	Minimum Range From	Minimum Range To	Redundancy Required	Notes
PAS, Primary Coolant & Sump Ph	E3	1	13 Ph	N/A	
Pressurizer Heater Status	D2	0	800 AC Amps	N/A	
Pressurizer Level	A1 B1 C1 D2	0	100% OF Cylindrical Portion	3 Channels	Trend Recorder Required
Pressurizer PORV Block Valve Position	D2	Closed	Not Closed	N/A	
Pressurizer (Primary Sys) PORV Position	D2	Closed	Not Closed	N/A	
Pressurizer (Primary Sys) Safety Relief Valve Position	D2	Closed	Not Closed	N/A	
Pressurizer Relief (Quench) Tank level	D3	Top 0	Bottom 100%	N/A	Actual Range 0 to 100 Inches
Pressurizer Relief (Quench) Tank Pressure	D3	0 0	Design P 100 PSIG	N/A	
Pressurizer Relief (Quench) Tank Temperature	D3	50	400 Deg F	N/A	See Deviation No. 11
Radiation Exposure Rate	E2	1E-3	1E4 RADS/Hr	N/A	See letter to NRC dated 9-14-89
Radiation Level in Circ Prim Coolant	C3	1/2 TS 0.5 uCi/gm	100 TS 100 uCi/gm	N/A	See Deviation No. 5

TABLE 7.5-2 (Sheet 8)

TABLE OF VARIABLES FOR POST ACCIDENT MONITORING

Variable Description	Type/ Category	Minimum Range From	Minimum Range To	Redundancy Required	Notes
RB Aux Flr & Equip Drn Sump Lvl - Pocket Sump (Cntmt Sump Lvl - NR)	D3	0	37 Inches	N/A	See Deviation No. 12
RB Flr & Equip Drn Sump Lvl (Cntmt Sump Lvl - NR)	D3	0	64 Inches	N/A	See Deviation No. 12
RCS Seal Inj Flow	D3	0	8.8 GPM/RCP	N/A	
RCS Activity and Coolant Analysis (ANA of Primary Coolant)	C3	See Notes		N/A	See Post Accident Sampling Gross Activity
RCS Cold Leg Water Tempt	A1 B1 C1	50	700 Deg F	1/Cold Leg	See Deviation No. 1, Trend Recorder Required
RCS Hot Leg Water Temp	A1 B1	50	700 Deg F	1/Hot Leg	See Deviation No. 1, Trend Recorder Required
RCS Pressure	A1 B1 C1	0	3000 PSIG	3 Channels	Trend Recorder Required
RCS Soluble Boron Concentration	B3	See Notes		N/A	See Post Accident Sampling Boron Content
RCS Subcooling Margin (Degrees of Subcooling)	A1 B2	200 Subcool	35 Superheat Deg F	2 Channels	
Radiation Exposure Meters	N/A	N/A	N/A	N/A	See Deviation No. 23
Reactor Coolant Pump Status	D2	0	800 AC AMPS	N/A	
Reactor Head Vent Valve Pos	D2	Closed	Not Closed	N/A	

TABLE 7.5-2 (Sheet 9)

TABLE OF VARIABLES FOR POST ACCIDENT MONITORING

Variable Description	Type/ Category	Minimum Range From	Minimum Range To	Redundancy Required	Notes
Reactor Vessel Level (Coolant Level in Reactor)	B1	Bottom	Top	2/Section (Lower, Dynamic, Upper)	
RHR HX Outlet Temp	D2	50	400 Deg F	N/A	See Deviation No. 9
RHR Pump Flow to Cl 1 & 4 (RHR Sys Flow, Flow in LPI SYS)	D2	0 0	110% (Design) 4500 GPM	N/A	
RHR Pump Flow to Cl 2 & 3 (RHR Sys Flow, Flow in LPI SYS)	D2	0 0	110% (Design) 4500 GPM	N/A	
RHR Pump Flow to Hot Legs	D2	43% 1500 GPM	110% (Design) 7000 GPM	N/A	See Deviation No. 15
RHR Spray Flow	D2	0	2500 GPM	N/A	
RWST Level	A1 D2	Top 0	Bottom 100%	2 Channels	
SG Blowdown Vlv Pos	D2	Closed	Not Closed	N/A	
SG Level (NR)	A1 B1 D2	0	100%	3/SG	SG WR Level Serves as a Deverse Third Channel Actual Range 0 to 144 Inches
SG Level (WR)	A1 D1	Tube Sheet 0	Separators 100%	1/SG	Also Serves as a Third Deverse Channel for SG NR Level, Trend Recorder Required
SG Pressure	A1 B1 C3 D2	0	1200 PSIG	2/SG	See Deviation No. 3, Trend Recorder Required

TABLE 7.5-2 (Sheet 10)

TABLE OF VARIABLES FOR POST ACCIDENT MONITORING

Variable Description	Type/ Category	Minimum Range From	Minimum Range To	Redundancy Required	Notes
Shield Bldg EXH Flow Rate	E2	0 0	110% (Design) 18,700 CFM	N/A	See Reference 12
Shield Bldg EXH RAD Lvl - Noble Gas	C2 E2	1E-6	1E4 uCi/CC	N/A	
Sheild Bldg EXH RAD Lvl - Particulates & Halogens	E3	1E-3	1E2 uCi/CC	N/A	
SI Accumulator Isol Vlv Pos	D3	Closed	Open	N/A	See Deviation No. 17
SI Accumulator Tank Level	D3	71	79% Vol	N/A	See Deviation No. 16
SI Accumulator Tank Pressure	D3	0	700 PSIG	N/A	See Deviation No. 6
SI Pump Flow (Flow in HPI Sys)	D2	0 0	110% (Design) 750 GPM	N/A	
Steam Dump Valve Position	D2	Closed	Not Closed	N/A	
Steam Supply to TBD AFW Pump Valve Position	D3	Closed	Not Closed	N/A	
Tritiated DR Collector TK Lvl (High-Lvl Radioactive Liq Tk)	D3	2% 5 Inches	98% 127 Inches	N/A	See Deviation No. 27 Local Indicator & Alarm See letter to NRC dated 9-14-89
Volume Control Tank Level	D3	0	70 inches	N/A	See Deviation No. 20
Waste (Radioactive) Gas Holdup Tk Pressure	D3	0 0	100% Design P 150 PSIG	N/A	See Deviation No. 24 Local Indicator & Alarm See letter to NRC dated 9-14-89

TABLE 7.5-2 (Sheet 11)

TABLE OF VARIABLES FOR POST ACCIDENT MONITORING

Variable Description	Type/ Category	Minimum Range From	Minimum Range To	Redundancy Required	Notes
Wind Direction	E3	0	360 Degrees	N/A	
Wind Speed	E3	0	67 MPH	N/A	

Calculation SQN-EEB-PS-PAM-0001 lists the instrumentation loops, which are used to accomplish these variable descriptions.

7.6 ALL OTHER SYSTEMS REQUIRED FOR SAFETY

7.6.1 Instrumentation and Control Vital Power Supply Systems

7.6.1.1 Description

The following is a description of the Instrumentation and Control Vital Power Supply System: (See Chapter 8 for description of Vital Alternating-Current (AC) System)

a. Each unit has four inverters, and four distribution panels. Each inverter is connected independently to one distribution panel.

b. The inverters provide a source of 120V, 60 Hz power for the operation of the nuclear steam supply system instrumentation. This power is derived from the 480V AC, 3Φ, 60 Hz distribution system (preferred power supply), or the station batteries which assure continued operation of instrumentation systems in the event of a station blackout. The inverters have a static switch which automatically transfers between the inverter output and a regulated bypass source in the event of overload or system malfunction. The bypass source is derived from the same 480V source as the inverter.

c. Each of the four distribution panels may be connected to a separate backup source of 120V AC power. Each channel has a spare inverter which can be manually aligned to replace the unit 1 or Unit 2 inverter.

7.6.1.2 Functional Performance Requirements

The functional performance requirements for the Vital Power Supply system are: To supply reliable and continuous regulated single phase AC power to all instrumentation and control equipment required for plant safety.

7.6.1.3 Analysis

There are four independent batteries (plus one spare) and battery chargers. Each battery is attached to a bus serving one inverter per unit plus one spare inverter shared between units. Since not more than one inverter per unit is connected to the same bus, a loss of a single bus can only affect one of the four inverters per unit. In addition, each of the four distribution panels is connected to a different source of backup 120V AC power. Each distribution panel can receive power from the 120V AC backup source under operator control. The inverters have a static switch which automatically transfers between the inverter output and a different regulated bypass source in the event of overload or system malfunction without interrupting power to the load. In addition, each of the four distribution panels can be transferred under operator control to a spare inverter.

Therefore, no single failure in the Instrumentation and Control Vital Power Supply System or its associated power supplies can cause a loss of power to more than one of the redundant loads.

The loss of the inverter’s alternating-current or direct-current inputs are alarmed in the control room, as is the loss of an inverter's output. There are no inverter breaker controls on the control board, as no manual transfers are necessary in the event of loss of the 480V AC preferred power source.

Physical separation and provisions to protect against fire are discussed in Chapter 8 and the Fire Protection Report (see 9.5.1).

Based on the scope definitions presented in Reference 1 (IEEE 308- September, 1971), Reference 2 (IEEE 279-1971), and References 3 (IEEE 338-1971), the criteria which are applicable to the Instrumentation and Control Vital Power Supply System are IEEE 308-Sept., 1971 and Regulatory Guide 1.6 (March, 1971). Availability of this system is continuously indicated by the operational status of the system and is verified by periodic testing as discussed in sections 8.3.1.1 and 8.3.2.1.

7.6.2 Residual Heat Removal Isolation Valves

7.6.2.1 Description

There are two motor-operated gate valves as shown in Figure 5.5.7-1 in series in the inlet line from the Reactor Coolant System to the Residual Heat Removal System. They are normally closed and are only opened for residual heat removal after Reactor Coolant System pressure and system temperature has been reduced to acceptable levels. (See Chapter 5 for details of the Residual Heat Removal System). They are the same type of valve and motor operator as those used for accumulator isolation, but they differ in their controls and indications in the following respect:

The pump suction isolation valve adjoining the Reactor Coolant System is interlocked with a pressure signal to prevent it from opening whenever the system pressure is greater than the acceptable level. There are also interlocks which prevent the valve from opening unless the RWST suction valve and containment sump isolation valve are fully closed. During normal plant operation, power is removed from the valve control circuit to prevent inadvertent opening of the valve. Valve status indication is provided at the control switch on the Main Control Board at all times. The other pump suction isolation valve, adjoining the Residual Heat Removal System, is similarly interlocked to prevent opening whenever the system pressure is greater than the acceptable level.

When aligning for residual heat removal operations, power is restored to the valve and it is opened from the control switch on the Main Control Board. Annunciation to warn against RHR system overpressurization is provided to the operator by a high RHR suction pressure alarm. This alarm is actuated from any one of two pressure switches located on the RHR common header suction piping.

Additional overpressure protection is provided by an RHR suction valve misalignment logic that will also actuate the Main Control Room high suction pressure alarm. This logic will actuate the alarm whenever one of the two suction valves is moved from its closed seat while the other valve remains closed. This will provide the alarm to alert a misalignment but will not provide a nuisance alarm when both valves are opened for RHR operation.

7.6.2.2 Analysis

Based on the scope definitions presented in Reference 2 (IEEE 279-1971) and Reference 3 (IEEE-338, 1971), these criteria do not apply to the Residual Heat Removal Isolation Valve interlocks; however, in order to meet NRC requirements and because of the possible severity of

the consequences of loss of function, the requirements of IEEE-279 will be applied with the following comments.

1. For the purpose of applying IEEE 279-1971, to this circuit, the following definitions will be used.

    a. Protection System

    The two valves in series and all components of their open interlocking.

    Utilization of operator action in response to the high suction pressure/suction valve position - mismatch alarm is based upon the Westinghouse generic analysis described in WCAP-11736 as confirmed by a comparison analysis of Sequoyah as documented in Calculation SQN-SQS2-0097.

    b. Protective Action

    The manual initiation and maintenance of Residual Heat Removal System isolation from the Reactor Coolant System for Reactor Coolant System pressures above residual heat removal design pressure.

2. IEEE-279, Paragraph 4.10: The requirement for on-line test and calibration capability is applicable only to the actuation signal (pressure channel from P403 in Process Protection Set II and pressure channel from P405 in Process Protection Set III) and not to the isolation valves, which are required to remain closed during power operation.

3. IEEE-279, Paragraph 4.15: This requirement does not apply, as the setpoints are independent of mode of operation and are not changed.

Environmental qualification of the valves and wiring are discussed in Section 3.11.

7.6.3 Refueling Interlocks

A functional description of the refueling system equipment covered in Section 9.1 includes a discussion of the interlocks which are provided on the refueling equipment to prevent damage to the fuel assemblies. Although there are no electrical interlocks associated with the spent fuel bridge and the fuel handling tools, there are electrical interlocks employed by the manipulator crane and the fuel transfer system.

The following are the electrical interlock functions on the manipulator crane: (Although these interlocks are not specifically designed to meet IEEE 279-1971 (Reference 2), the following discussions considers the compliance of the electrical interlocks with the provisions of individual sections of IEEE 279).

1. Electrical movement of the bridge or trolley is permissible only when the fuel is withdrawn completely into the outer mast. Two position indicating switches wired in series for the fuel withdrawn interlock are provided. When the gripper is disengaged (no fuel), the redundant switches are bypassed, and bridge or trolley movement is permitted.

2. The solenoid valve cuts off air to the operating cylinder gripper except when the weight indicator shows there is no fuel assembly suspended from the gripper. This is to prevent the operator from opening the gripper and dropping the fuel. An independent mechanical locking device as redundant protection for the associated interlock is provided.

3. The hoist electric drive is operable only when the gripper position switches show that the gripper is either fully engaged or disengaged. This interlock is to prevent a fuel assembly from being lifted if the gripper has hung up in a partially engaged position. A monitoring circuit to notify the operator of failure of the associated interlock circuit is provided.

4. Hoist electric drive in the up direction is prevented if the primary load cell indicates an excessive load. This interlock protects the fuel assembly from excessive loading if it becomes hung up during withdrawal. The primary load cell which can be bypassed is backed up by a second excessive weight switch (set above the primary) that is completely independent of the primary circuit and cannot be bypassed. This meets the single failure criteria of Section 4.2 of IEEE 279-1971 Standard. The primary load cell does have a scale change switch that is accessible to the operator. Both interlocking functions of the load cell (one involving the hoist drive in the up direction and the other cutting off air to the operating cylinder gripper) have redundant back up, one back up being a mechanical locking device for the solenoid valve, and the other back up being a switch which cannot be bypassed for the load cell.

For all the above four interlock functions associated with the manipulator crane the appropriate provisions required by sections 4.13 (Indication of Bypass) and 4.14 (Access to Means of Bypass) of IEEE 279 are specified.

5. The bridge, trolley, and hoist are mutually interlocked to prevent operation of more than one mode at a time. This interlock function is not considered safety-related because, although it is not good practice to do so, it is not necessarily hazardous to operate more than one mode at a time.

6. The bridge and trolley drives are interlocked to prevent movement that could cause collision of the mast with the guide studs, stored internals or walls. This interlock function is not considered safety-related because the consequences of failure would not cause damage to a fuel assembly in the machine. The fuel assembly is carried inside the outer mast which is a 16 inch O.D., 3/4 inch wall pipe.

The following are the electrical interlock functions on the fuel transfer system:

1. Both lifting frames must be in the horizontal position before the conveyor car can be moved.

2. The conveyor car must be against its travel limit stops before the lifting frames can be operated. This interlock is to make sure the fuel container on the conveyor car, is properly positioned before an attempt is made to raise it.

3. The manipulator crane must be over the core or the gripper must be at the top stop position before the lifting frame can be operated. This interlock is to prevent the operator from lowering the transfer system fuel container while the manipulator crane is in the process of inserting or removing a fuel assembly.

For the above interlock functions associated with the Fuel Transfer System, the appropriate provisions required by section 4.14 of IEEE 279 are specified.

7.6.4 DELETED BY AMENDMENT 8

7.6.5 Loose Part Detection System (LPDS)

System Description

The Loose Part Detection System consists of sensors capable of detecting acoustic disturbances within the reactor coolant pressure boundary, associated cabling, amplifiers, and a data acquisition system. Two sensors are located at each natural collection region on the exterior surface of the reactor coolant boundary (e.g., reactor vessel upper and lower plenum and each of the steam generator reactor coolant inlet plenums). Should a sensor or sensor channel fail at one of these natural collection regions, the failed sensor or channel can be removed from service with the remaining sensor or channel providing loose part monitoring coverage for that area. The online sensitivity of the system is capable of detecting a metallic loose part that weighs from 0.25 to 30 lbs. and impacts with a kinetic energy of 0.5 ft-lb on the inside surface of the reactor coolant pressure boundary within 3 feet of a sensor.

The data acquisition portion of the system has an automatic and a manual mode of operation. The manual mode allows users to view system operation, to set alarm discrimination parameters, and to perform diagnostic tests. The automatic mode provides continuous monitoring for loose part events, displays real time system status, and the ability to record raw data for later analysis. The automatic mode also provides filtering to prevent false loose part alarms. The system also allows for manual inhibiting of a channel's alarm functions.

The LPDS is capable of performing its function following all seismic events, up to and including the Operating Basis Earthquake (OBE), that do not require plant shutdown. While recording equipment may not function without maintenance following the seismic event, the audio or visual alarm capability will remain functional. Portions of the system located within containment are compatible with the operating environment and consistent with minimum maintenance requirements and low-failure rates.

7.6.6 Spurious Actuation Protection for Motor Operated Valves

The design of Sequoyah Nuclear Plant is such that the failure of any single valve to operate on demand cannot result in the loss of capability to perform a system safety function. However, in the case of possible inadvertent valve misalignment, the following motor operated valves have been identified as valves whose spurious operation could result in the loss of a system safety function.

FCV 63-1	FCV 63-67	FCV 63-98
FCV 63-3	FCV 63-72	FCV 63-118
FCV 63-5	FCV 63-73	FCV 63-156
FCV 63-8	FCV 63-80	FCV 63-157
FCV 63-11	FCV 63-93	FCV 63-172
FCV 63-22	FCV 63-94	

Means have been provided to preclude such spurious misalignment. The design consists of modified control circuits for these valves to ensure that no single failure will be able to energize

the opening or closing coils for the valve operator. The design utilizes contacts which are wired before and after each opening and closing coil. Figure 7.6.6-1 is a typical schematic, isolation of the opening and closing coils is provided by contacts R11-R12, R21-R22, L21-L22, and L31-L32.

In addition, single failure has been considered on the part of the operator. For FCV-63-1, 22, 67, 80, 98, and 118 operating instructions specify the removal of valve actuator power during normal operation. After removal of power, valve position indication is still provided to the operator (from a separate control power circuit). The design for the remaining valves includes easy access, clear protective covers attached to the main control board panel over each respective control room switch. The operator would be required to open this protective cover before he operates the control switch.

7.6.7 Interlocks for RCS Pressure Control During Low Temperature Operation

The basic function of the RCS overpressure mitigation system during low temperature operation is discussed in Section 5.2.2.4. The function of this actuation logic is to continuously monitor RCS temperature and pressure conditions when the actuation logic is manually unblocked at a temperature below the arming setpoint. The monitored system temperature signals are processed to generate the reference pressure limit program which is compared to the actual measured system pressure. This comparison will provide an actuation signal to cause the PORV to automatically open if necessary to prevent pressure conditions from exceeding allowable limits. See Figure 7.6.7-1 for the block diagram showing the interlocks for RCS pressure control during low temperature operation.

As shown on this figure, the station variables required for this interlock are channelized as follows:

1. Protection Set I

    a. Wide Range RCS Temperature from Hot Legs and Cold Legs.

2. Protection Set II

    a. Wide Range RCS Temperature from Hot Legs and Cold Legs.

3. Protection Set III

    a. Wide Range RCS System Pressure.

4. Non-Divisional

    a. Wide Range RCS System Pressure.

The wide range temperature signals, as inputs to the Low Temperature Over Pressure System (LTOPS) contained within the plant Distributed Control System (DCS) in Processing Groups 12 and 13, continuously monitor RCS temperature conditions. Whenever plant operation is at a temperature below the arming setpoint and the system is manually armed, LTOPS provides RCS overpressure protection. In Protection Set I, the RCS hot leg and cold leg wide range temperature channels supply through an isolation device continuous analog input to DCS auctioneering logic, which is located in the DCS Processing Group 13. The lowest reading will be selected and input to a function generator which calculates the reference limit program considering the plant's allowable pressure and temperature limits. Also available from Protection Set III is the wide range RCS system pressure signal which is sent through an isolation device to DCS Processing Group 13. The reference pressure from the DCS function generator is compared to the actual RCS system pressure monitored by the wide range pressure channel.

The error signal derived from the difference between the reference pressure and the actual measured pressure will first annunciate a main control board alarm whenever the actual measured pressure approaches, within a predetermined amount, the reference pressure. On a further increase in measured pressure, the error signal will generate an annunciated actuation signal. The actuation signal available from Processing Group 13 will control the Train A PORV whenever the system is manually armed. Above this manual interlock, the normal pressure protection system (as discussed in Section 5.2) ensures that the system pressure temperature limitations are not exceeded. This manual interlock prevents unnecessary system actuation at normal RCS operating conditions as a result of a failure in the process sensors.

The monitored generating station variables that generate the actuation signal for the Train B PORV are processed in a similar manner. In the case of the Train B PORV, the reference temperature is generated in DCS Processing Group 12 from the lowest auctioneered wide range hot leg and cold leg temperature. The auctioneering device derives its inputs from the RCS wide range temperature in Protection Set II and the actual measured pressure signal is available from a non-divisional transmitter. Therefore, the generating station variables used for the Train B PORV are derived from a source that is independent of the Sets from which generating station variables used for the Train A PORV are derived. The error signal derivation itself used for the actuation signals is available from the Processing Group 13.

Upon manual arming and receipt of the actuation signal, the actuation device will automatically cause the PORV to open. Upon sufficient RCS inventory letdown, the operating RCS pressure will decrease, clearing the actuation signal. Removal of this signal causes the PORV to close.

7.6.7.1 Analysis of Interlocks

Many criteria presented in IEEE 279-1971 and IEEE 338-1971 standards do not apply to the interlocks for RCS pressure control during low temperature operation because the interlocks do not perform a protective function but rather provide automatic pressure control at low temperatures as a backup to the operator. However, although IEEE-279 criteria do not apply, some advantages of the dependability and benefits of an IEEE-Std-279 design have occurred by including the pressure (A train only) and temperature signal elements as noted above in the Protection Sets and by organizing the control of the two PORVs into dual channels wherever practical. Either of the two PORVs can accomplish the RCS pressure control function.

The design of the low temperature interlocks for RCS pressure control is such that pertinent features include:

1. No credible failure at the output of the protection set racks, after the output leaves the racks to interface with the interlocks, will prevent the associated protection system channel from performing its protective function because such outputs that leave the racks go through an isolation device as shown in Figure 7.6.7-1.

2. Testing capability for elements of the interlocks within (not external to) the overpressure mitigation system is consistent with the testing principles and methods discussed in Section 7.2.2.2.3.

3. A loss of offsite power will not defeat the provisions for an electrical power source for the interlocks because these provisions are through onsite power which is described in Sections 8.3 and 7.6.1.

7.6.8 Liquid Level Monitoring Systems

Two types of level measurement systems used inside containment are described below along with the particular application:

7.6.8.1 Steam Generator Water Level Instrumentation

An open column reference leg is used for steam generator (SG) level measurement. The instrument is connected to the SG process by a condensate chamber at the upper tap. The liquid in the reference leg will be at essentially ambient temperature.

Steam Generator Narrow Range Water Level Safety Functions

- Turbine trip and feedwater isolation on high-high steam generator water level
- Reactor trip on low-low steam generator water level
- Auxiliary feedwater pump initiation on low-low steam generator water level
- Post-accident monitoring function
- SG level control for AFW following an accident

Steam Generator Wide Range Water Level Safety Function

- Post-accident monitoring function

7.6.8.2 Pressurizer Water Level Instrumentation

A sealed reference leg is used for pressurizer level measurement. For additional information, see Section 7.2.1.1.5 and 7.2.2.3.4.

Pressurizer Water Level Safety Function

- Reactor trip on high water level
- Post-accident monitoring function

7.6.9 Switchover from S.I. to Recirculation Following LOCA

For the discussion on switchover from the S.I. mode to the recirculation mode, refer to Section 6.3.2.2, and for the switchover logic functions, see Figure 7.6.9-1.

7.6.10 In-core Instrumentation - Thermocouples

The In-core Thermocouple System provides information on the core outlet temperatures at selected core locations.

The thermocouple installation is discussed in section 4.2 and 4.4.

Thermocouple readings are monitored by redundant microprocessors which also monitor reactor coolant wide-range temperature and pressure. The microprocessors output the following information:

1. In-core reactor temperature
2. Wide range reactor coolant temperature
3. Wide range reactor coolant pressure
4. Saturation or subcooling margin of the reactor coolant in °F based on hottest in-core temperature, hottest RCS hot-leg temperature or average of all in-core temperatures.

The microprocessors output this information to the redundant control room indicators and recorders and Items 1-3 above to the Plant Computer System.

7.6.11 References

1. The Institute of Electrical and Electronic Engineers, Inc., "IEEE Criteria for Class 1E Electrical Systems for Nuclear Power Generating Stations," IEEE Standard 308, September, 1971.

2. The Institute of Electrical and Electronic Engineers, Inc., "IEEE Standard: Criteria for Protection Systems for Nuclear Power Generating Stations," IEEE Standard 279-1971.

3. The Institute of Electrical and Electronic Engineers, Inc., "IEEE Trial-Use Criteria for the Periodic Testing of Nuclear Power Generating Station Protection Systems," IEEE Standard 338, 1971.

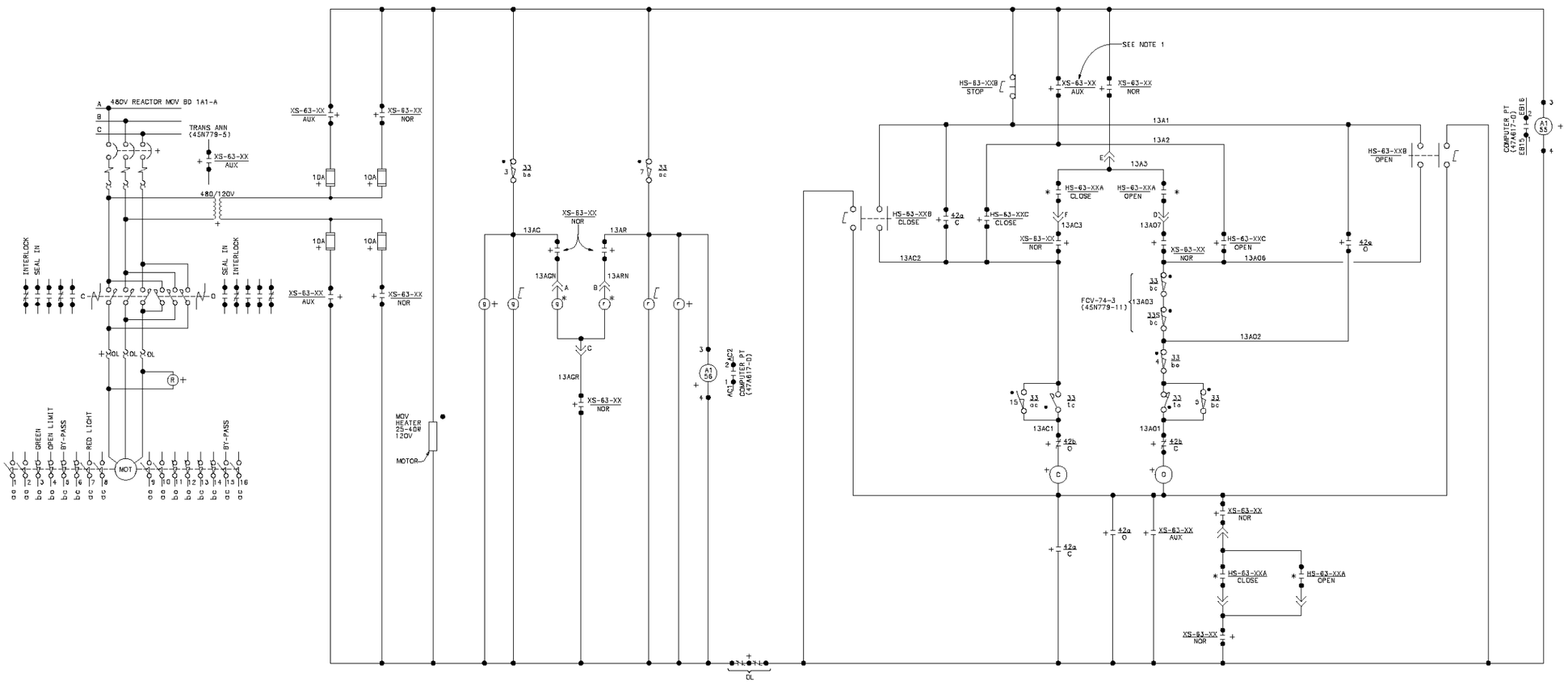

SYMBOLS:

* DEVICE LOCATED IN MAIN CONTROL ROOM

● DEVICE LOCATED ON MOV

[LOCAL CONTROL STATION

+ DEVICE LOCATED ON MOTOR CONTROL CENTER

NOTES:

1. SWITCH XS-63-XX, TRANSFERS CONTROL FROM MAIN CONTROL ROOM TO THE AUXILIARY CONTROL STATION. THE XX CORRESPONDS TO THE MOV UNID.
2. THIS IS A TYPICAL SCHEMATIC TO ENSURE THAT NO SINGLE FAILURE WILL BE ABLE TO ENERGIZE THE OPENING OR CLOSING CONTACTOR COILS FOR THE VALVE OPERATOR. SOME MOV SCHEMATICS MAY BE SLIGHTLY DIFFERENT FROM THIS TYPICAL WITH INTERLOCKS OR AUTOMATIC SIGNALS; HOWEVER, ALL MOVS WILL HAVE OPEN CONTACT LOGIC ON BOTH SIDES OF CONTACTOR COILS.

SEQUOYAH NUCLEAR PLANT
FINAL SAFETY
ANALYSIS REPORT

FIGURE 7.6.6-1

SPURIOUS ACTUATION
PROTECTION FOR MOVs
(REVISED BY AMENDMENT 24)

CAD MAINTAINED DRAWING

Best Available Historical Image

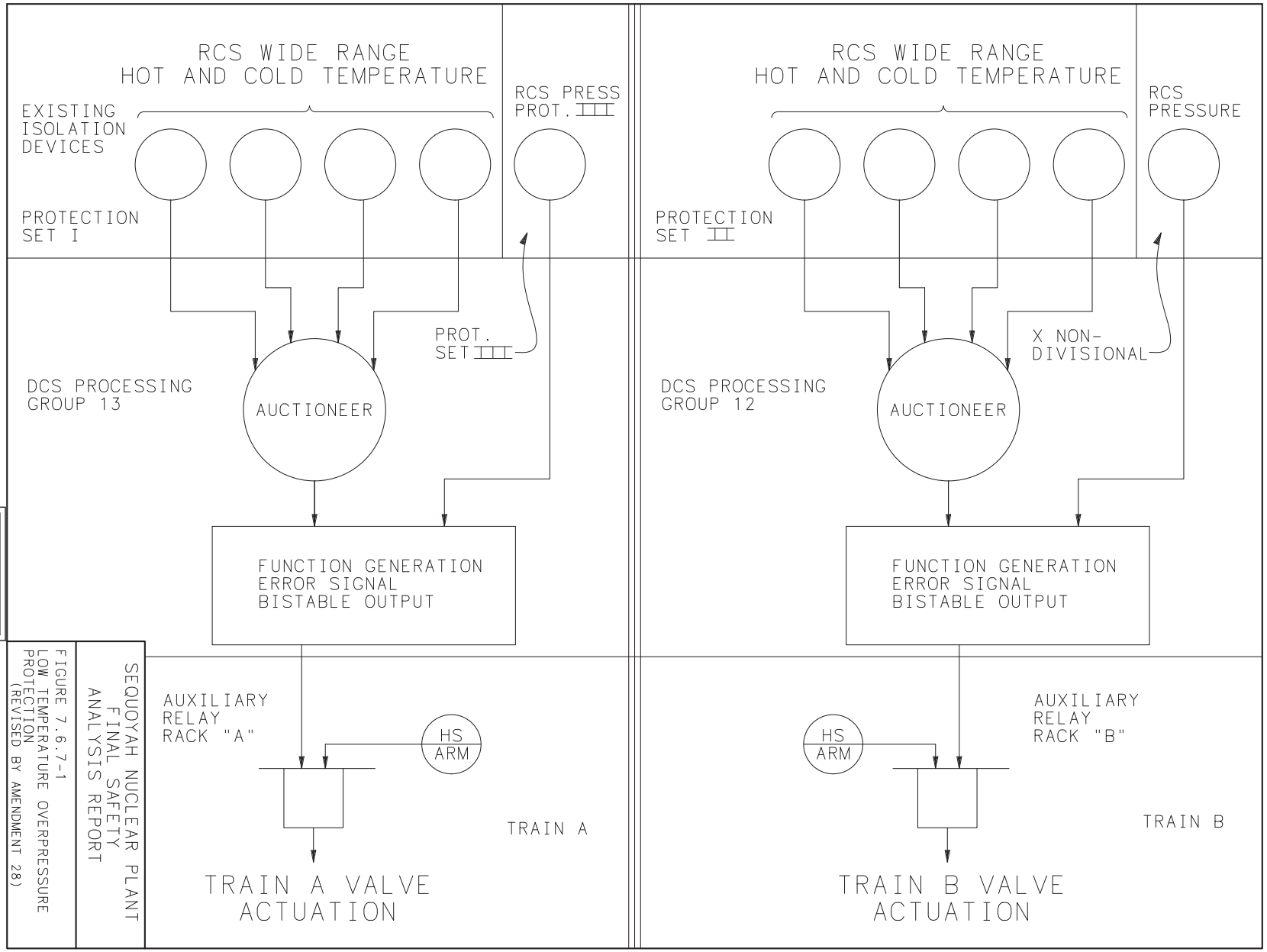

CAD MAINTAINED DRAWING

SEQUOYAH NUCLEAR PLANT
FINAL SAFETY
ANALYSIS REPORT

FIGURE 7.6.7-1
LOW TEMPERATURE OVERPRESSURE
PROTECTION
(REVISED BY AMENDMENT 28)

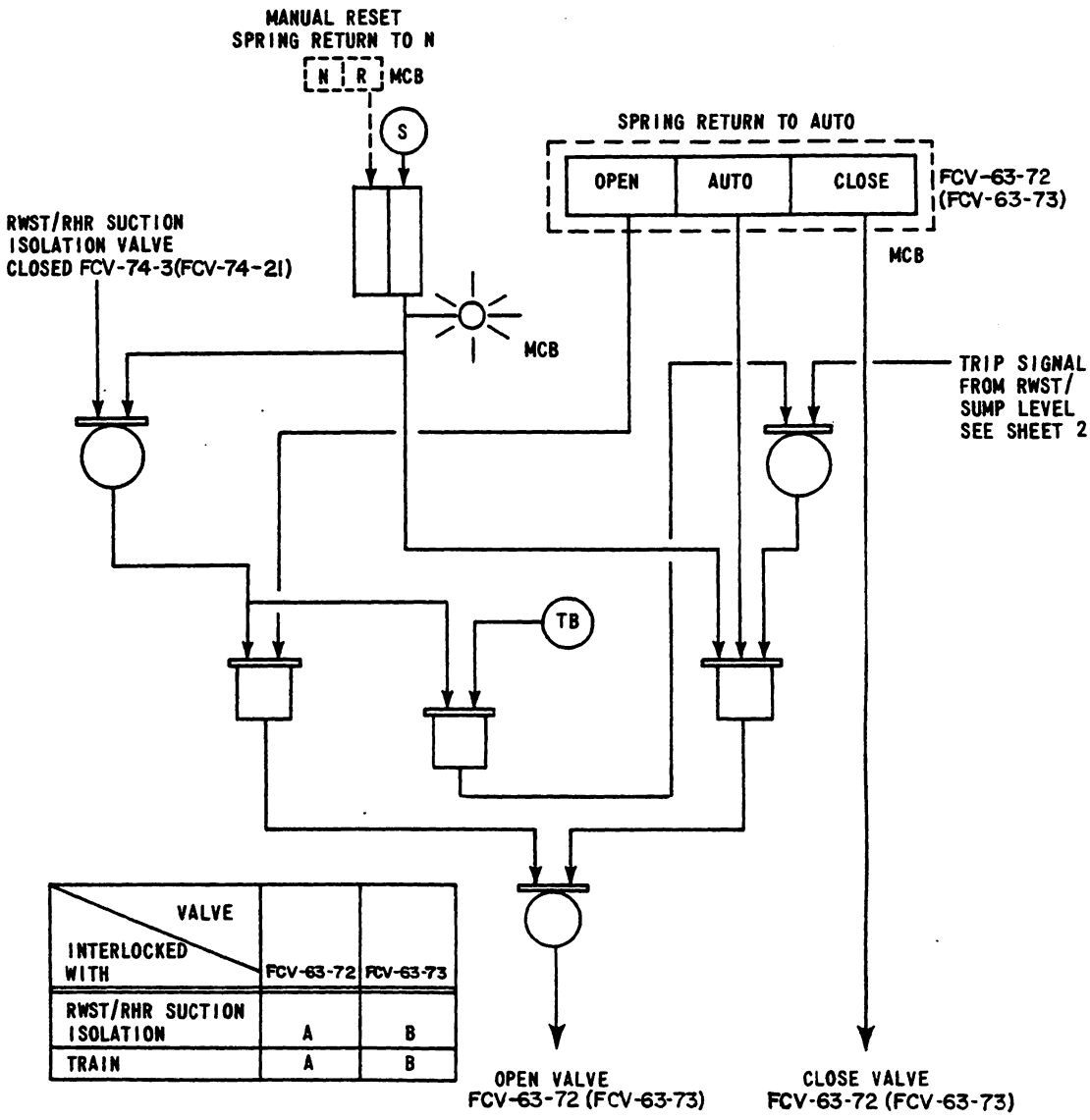

VALVE / INTERLOCKED WITH	FCV-63-72	FCV-63-73
RWST/RHR SUCTION ISOLATION	A	B
TRAIN	A	B

Figure 7.6.9-1 **Safety Injection System Recirculation Sump Isolation Valves (Sheet 1 of 3)**

REVISED BY AMENDMENT 6.

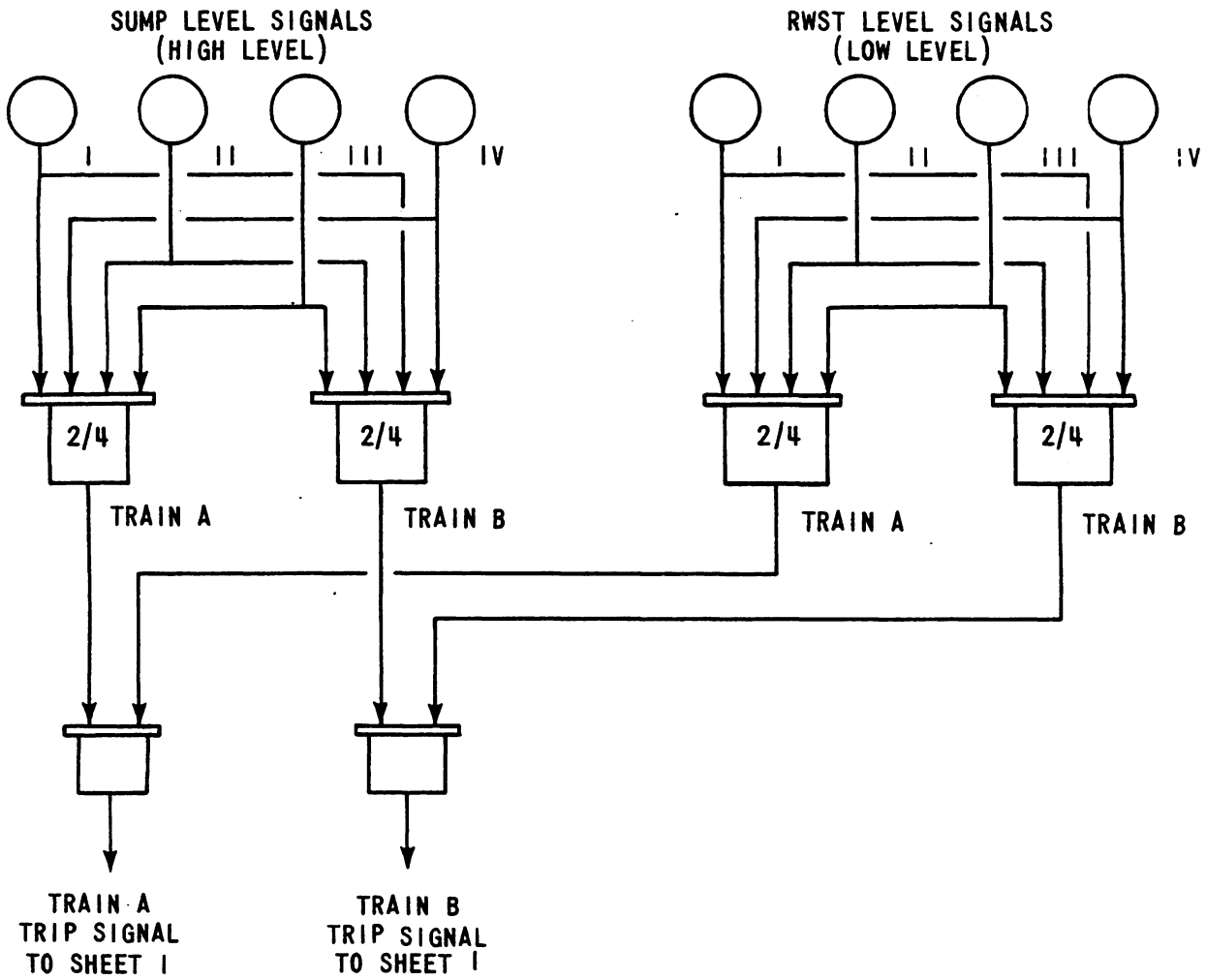

NOTE: SUMP AND RWST LEVEL INSTRUMENTATION DETECTED FROM THE INDICATED PROTECTION INSTRUMENT BUSSES

Figure 7.6.9-1 **Safety Injection System Recirculation Sump Isolation Valves (Sheet 2 of 3)**

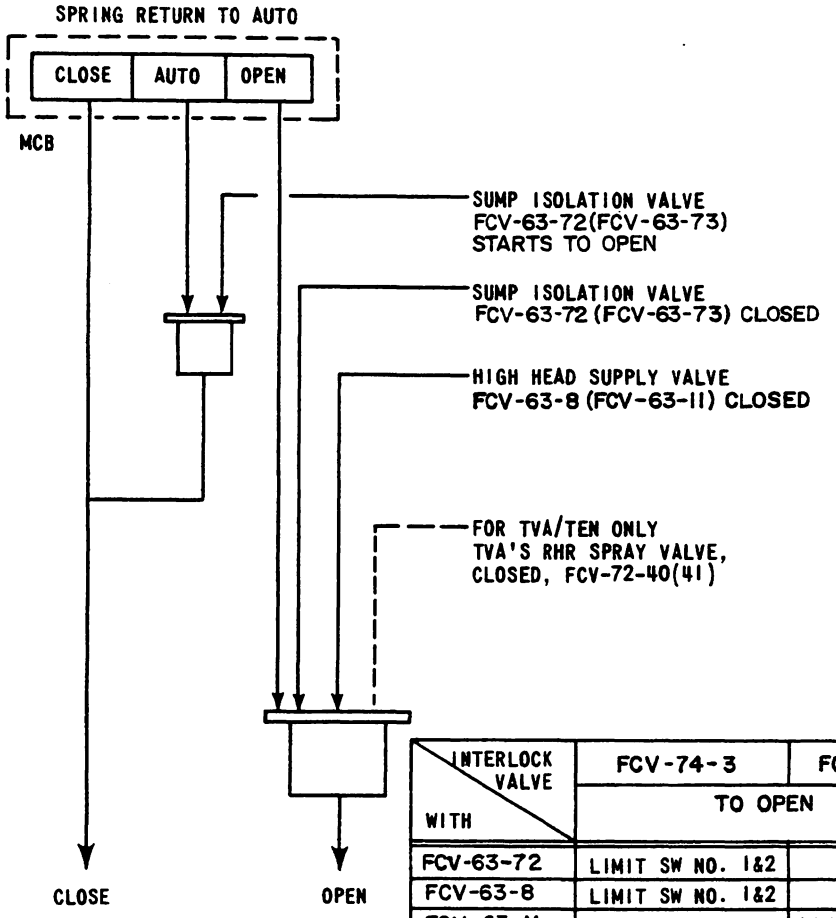

INTERLOCK VALVE / WITH	FCV-74-3	FCV-74-21
	TO OPEN	
FCV-63-72	LIMIT SW NO. 1&2	-
FCV-63-8	LIMIT SW NO. 1&2	-
FCV-63-11	-	LIMIT SW NO. 1&2
FCV-63-73	-	LIMIT SW NO. 1&2
FCV-72-40	TVA LIMIT SW. NO. 1&2	-
FCV-72-41		TVA LIMIT SW NO. 1&2
	TO CLOSE	
FCV-63-72	TVA LIMIT SW	
FCV-63-73		LIMIT SW

Figure 7.6.9-1 **Safety Injection System Recirculation Sump Isolation Valves (Sheet 3 of 3)**

REVISED BY AMENDMENT 6.

7.7 CONTROL SYSTEMS NOT REQUIRED FOR SAFETY

Much of the Plant Control System is contained within the Plant Distributed Control System (DCS).

The general design objectives of the Plant Control Systems (PCS) are:

1. To establish and maintain power equilibrium between primary and secondary system during steady-state unit operation.

2. To constrain operational transients so as to preclude unit trip and reestablish steady-state unit operation.

3. To provide the reactor operator with monitoring instrumentation that indicates all required input and output control parameters of the systems and provides the operator the capability of assuming manual control of the system.

7.7.1 Description

The PCS described in this section perform the following functions:

1. Reactor Control System

   a. Enables the nuclear plant to accept a step load increase or decrease of 10 percent and a ramp increase or decrease of 5 percent per minute within the load range of 15 percent to 100 percent without reactor trip, steam dump, or pressurizer relief actuation subject to possible xenon limitations.

   b. Maintains reactor coolant average temperature T_{avg} within prescribed limits by creating the bank demand signals for moving groups of full length rod cluster control assemblies during normal operation and for operational transients. The T_{avg} control also supplies a signal to pressurizer level control, and steam dump control.

2. Rod Control System

   a. Provides for reactor power modulation by manual or automatic control of full-length control rod banks in a preselected sequence and for manual operation of individual banks.

   b. Systems for Monitoring and Indicating

      (1) Provide alarms to alert the operator if the required core reactivity shutdown margin is not available due to excessive control rod insertion.

      (2) Display control rod position.

      (3) Provide alarms to alert the operator in the event of control rod deviation exceeding a preset limit.

3. Plant Control System Interlocks

   a. Prevent further withdrawal of the control banks when signal limits are approached that predict the approach of a DNBR limit or kW/ft limit.

b. Inhibit automatic turbine load change as required by the Nuclear Steam Supply System.

4. Pressurizer Pressure Control

a. Maintains or restores the pressurizer pressure to the design pressure $\pm$ 35 lb/in^2 (which is well within reactor trip and relief and safety valve actuation setpoint limits) following normal operational transients that induce pressure changes by control (manual or automatic) of heaters and spray in the pressurizer. Also provides steam relief by controlling the power relief valves.

5. Pressurizer Water Level Control

a. Establishes, maintains, and restores pressurizer water level within specified limits as a function of the average coolant temperature. Changes in level are caused by coolant density changes induced by loading, operational, and unloading transients. Level changes are provided by means of charging flow control (manual or automatic). Maintaining coolant level in the pressurizer within prescribed limits by actuating the charging system and/or isolating the letdown system thus provides control of the reactor coolant water inventory.

6. Steam Generator Water Level Control

a. Establishes and maintains the steam generator water level to within predetermined physical limits during normal operating transients.

b. Restores the steam generator water level to within predetermined limits at unit trip conditions. Regulates the feedwater flow rate such that under operational transients the heat sink for the Reactor Coolant System does not decrease below a minimum. Steam generator water inventory control is manual or automatic through use of feedwater control valves.

7. Steam Dump Control

a. In conjunction with the Rod Control System, permits the nuclear plant to accept a sudden 50 percent loss of net load without incurring reactor trip. Steam is dumped to the condenser as necessary to accommodate excess power generation in the reactor during turbine load reduction transients.

b. Provides the capability to remove stored energy and residual heat following a reactor trip to bring the plant to equilibrium no load conditions without actuation of the steam generator safety valves.

c. Maintains the plant at no load conditions and permit a manually controlled cooldown of the plant.

8. In-Core Instrumentation

Provides information on the neutron flux distribution.

7.7.1.1 Reactor Control System

The Reactor Control System enables the nuclear plant to make load changes automatically including the acceptance of step load increase or decrease of 10 percent and ramp increase or decrease of 5 percent per minute within the load range of 15 percent to 100 percent without reactor trip, steam dump, or pressure relief - subject to possible xenon limitations. The system is also capable of restoring coolant average temperature to within the programmed temperature deadband following a change in load. Manual control rod operation may also be performed.

The Reactor Control System controls the reactor coolant average temperature by regulation of control rod bank position. The reactor coolant loop average temperatures are determined from hotleg and coldleg measurements in each reactor coolant loop. There is an average coolant temperature (T_{avg}) computed for each loop, where:

$$T_{avg} = \frac{Thot + Tcold}{2}$$

The error between the programmed reference temperature (based on turbine impulse chamber pressure) and the highest of the average measured temperatures (which is processed through a lead-lag compensation unit (contained within the DCS)) from each of the reactor coolant loops constitutes the primary control signal as shown in general on Figure 7.7.1-1 and in more detail on the functional diagrams shown in Figure 7.2.1-1 Sheet 9. The system is capable of restoring coolant average temperature to the programmed value following a change in load. The programmed coolant temperature increases linearly with turbine load from zero power to the full power condition. The T_{avg} also supplies a signal to pressurizer level control and steam dump control and rod insertion limit monitoring.

An additional control input signal is derived from the reactor power versus turbine load mismatch signal. This additional control input signal improves system performance by enhancing response and reducing transient peaks.

7.7.1.2 Rod Control System

7.7.1.2.1 Full Length Rod Control System

The shutdown banks are always in the fully withdrawn position during normal operation, and are moved to this position at a constant speed by manual control prior to criticality. A reactor trip signal causes them to fall by gravity into the core. There are four shutdown banks.

The control banks are the only rods that can be manipulated under automatic control. Each control bank is divided into two groups to obtain smaller incremental reactivity changes per step. All rod control cluster assemblies in a group are electrically paralleled to move simultaneously. There is individual position indication for each rod cluster control assembly.

When the turbine load reaches approximately 15 percent of rated load, the operator may select the "AUTOMATIC" mode, and control rod motion is then controlled by the reactor control systems. A permissive interlock C-5 (see Table 7.7.1-1) derived from measurements of turbine impulse chamber pressure prevents automatic control when total turbine load is below

15 percent. In the "AUTOMATIC" mode, the rods are withdrawn (or inserted) in a predetermined programmed sequence by the automatic programming equipment. The manual and automatic controls are further interlocked with the control interlocks (see Table 7.7.1-1).

The full length Rod Control System receives rod speed and direction signals from the T_{avg} control system (contained within the DCS). The automatic rod speed demand signal varies over the corresponding range of 5 to 45 inches per minute (8 to 72 steps/minute) depending on the magnitude of the error signal. The rod direction demand signal is determined by the positive or negative value of the error signal. Manual control is provided to move a control bank in or out at a prescribed fixed speed.

Power to rod drive mechanisms is supplied by two motor generator sets operating from two separate 480 volt, 3-phase buses. Each generator is the synchronous type and is driven by a 150-horsepower induction motor. The alternating current power is distributed to the rod control power cabinets through the two series connected reactor trip breakers. A detailed discussion of the electrical power distribution is contained in Reference 3.

The variable speed full length rod control system rod drive programmer affords the ability to insert small amounts of reactivity at low speed to accomplish fine control of reactor coolant average temperature about a small temperature deadband, in addition to coarse control at high speed. A summary of the rod cluster control assembly sequencing characteristics is given below.

1. Two groups within the same bank are stepped such that the relative position of the groups will not differ by more than one step.

2. The control banks are programmed such that withdrawal of the banks is sequenced and overlapped in the following order: Control Bank A, Control Bank B, Control Bank C, and then Control Bank D. The programmed insertion sequence is the opposite of the withdrawal sequence, i.e., the last control bank withdrawn (Bank D) is the first control bank inserted.

3. The control bank withdrawals are programmed such that when the first bank reaches a preset position, the second bank begins to move out simultaneously with the first bank (e.g., overlap). When the first bank reaches the top of the core, it stops, while the second bank continues to move toward its fully withdrawn position. When the second bank reaches a preset position, the third bank begins to move out, and so on. This withdrawal sequence continues until the unit reaches the desired power level. The control bank insertion sequence is the opposite.

4. Overlap between successive control banks is adjustable between 0 to 50 percent (0 and 115 steps), with an accuracy of $\pm$ 1 step.

7.7.1.2.2 Part Length Rod Control System

Part length control rods are not installed in the Sequoyah Nuclear Plant.

7.7.1.3 Plant Control Signals for Monitoring and Indicating

7.7.1.3.1 Monitoring Functions Provided by the Nuclear Instrumentation System

The power range channels are important because of their use in monitoring power distribution in the core and verifying it is within specified safe limits. They are used to measure reactor power level, axial power imbalance, and radial power imbalance. Suitable alarms are derived from these signals as will be described below. Basic power range signals are:

1. Total current from a power range detector (four signals from separate detectors); these detectors are vertical and have an active length of 10 feet.

2. Current from the upper half of each power range detector (four signals).

3. Current from the lower half of each power range detector (four signals).

Derived from these basic signals are the following (including standard signal processing for calibration):

4. Indicated nuclear flux (four).

5. Indicated axial flux imbalance, derived from upper half flux minus lower half flux (four).

Alarm functions derived are as follows:

6. Deviation (maximum minus minimum of four) in indicated nuclear power.

7. Upper radial tilt (maximum to average of four) on upper-half currents.

8. Lower radial tilt (maximum to average of four) on lower-half currents.

Provision is made to continuously record, on strip charts on the control board, the 8 ion chamber signals, i.e., upper and lower currents for each detector. Nuclear power and axial unbalance is selectable for recording as well. Indicators are provided on the control board for nuclear power and for axial power imbalance.

A comprehensive discussion of the Nuclear Instrumentation System can be found in Reference 2.

7.7.1.3.2 <u>Rod Position Monitoring of Full Length Rods</u>

Two separate systems are provided to sense and display control rod position as described below:

1. Analog Rod Position Indication System (RPIS)

   Analog System - An analog signal is produced for each rod cluster control assembly by a linear variable transformer.

   Direct continuous readout of every rod cluster control assembly position is presented to the operator by individual meter indications without need for operator selection or switching to determine rod position. A rod bottom (rod drop) alarm is provided.

Unit Operation With an Inoperable RPIS Indicator

The malfunction of an indicator in the RPIS is addressed by controls established in the technical specifications. The controls include requirements to use the moveable incore detectors to verify the position of the affected rod whenever an indicator is inoperable. This action may be periodically repeated for the duration of the period the indicator is inoperable. A second action is available in the technical specifications to address the malfunction of an indicator for an extended period of time (referred to as the extended action in this discussion). The options provided by the extended action allows for continued operation in a situation where the component causing the indicator to be inoperable is inaccessible due to operating conditions (adverse radiological or temperature environment). In this situation, repair of the indicator cannot occur until the unit is in an operating mode that allows access to the failed components. The primary purpose for this option is to prevent unnecessary wear on the incore detectors due to repeated use over an extended period.

Implementation of the extended action involves the monitoring of test points associated with the control rod drive mechanism affected by the inoperable indicator. During the use of the extended action signal cables are connected to the control rod drive mechanism circuitry test points on a temporary basis to monitor the operation and timing of the lift coil and the stationary gripper coil to provide the instrumentation for the monitoring of the position of the affected rod in the MCR.

A variation of the extended action exists for shutdown rods with an Inoperable RPIS Indicator. This is because there is different monitoring criteria and operational function for a shutdown rod vs. a control rod. A shutdown bank has no automatic reactivity control function other than the ability to insert into the core from an automatic signal from SSPS and is only moved manually during periodic rod movement verification surveillances, and during plant startup and shutdown. This manual movement is considered intended rod movement, and not unintended rod movement. During normal plant operation, when the shutdown banks are withdrawn and not manually being moved, monitoring of test points for stationary gripper voltage displayed in the MCR for the affected rod is sufficient to determine whether unintended rod movement has occurred (i.e. loss of power to gripper). As a conservative measure, to further ensure unintended rod motion is not possible, the lift coil disconnect switch will be administratively controlled in the open position for the affected rod. It is not considered necessary to monitor the lift coil and various rod motion timing sequences, since these are associated with intended manual movement of the shutdown rods.

2. Demand Position Indication System (DPIS)

   The DPIS counts pulses generated in the Rod Drive Control System to provide a readout of the demanded bank position.

   The DPI and RPI Systems are separate systems; each serves as backup for the other. Operating procedures require the reactor operator to compare the demand and (actual) readings upon recognition of any apparent malfunction. Therefore, a single failure in rod position indication does not in itself lead the operator to take erroneous action in the operation of the reactor.

The DPIS is described in detail in Reference 4.

7.7.1.3.3 Control Bank Rod Insertion Monitoring

When the reactor is critical, the normal indication of reactivity status in the core is the position of the control bank in relation to reactor power (as indicated by the Reactor Coolant System ΔT) and coolant average temperature. Control bank rod insertion limits (RIL) maintain sufficient shutdown margin and provide a limit on the maximum inserted rod worth in the unlikely event of a hypothetical rod ejection, and limits rod insertion such that acceptable nuclear peaking factors are maintained. The rod insertion limits for each control rod bank are documented in the Core Operating Limits Report (COLR).

1. The "low" alarm alerts the operator of control rod bank RIL.

2. The "low-low" alarm alerts the operator a control rod bank has reached the RIL.

The purpose of the control bank rod insertion monitor (contained within the DCS) is to give warning to the operator of excessive rod insertion. The low alarm activates prior to the control bank reaching the rod insertion limit. Operators take action to address the excessive rod insertion and restore shutdown margin. The low-low alarm activates when the control rod bank has reached the RIL. Operators take action to restore margin and ensure Control Bank Insertion Limits Technical Specification requirements are met.

An upper limit is applied to the low and low-low control rod bank insertion alarms to limit nuisance alarms. The upper limit is set above the control bank D RIL at full power, ensuring the control bank D alarm input activates the control rod bank insertion alarms throughout the full range of power.

Since the amount of shutdown reactivity required for the design shutdown margin following a reactor trip increases with increasing power, the allowable rod insertion limit position increases (rods are withdrawn further) with increasing power. Two parameters which are proportional to power are used as inputs to the control bank rod insertion monitor: the ΔT between the hot leg and the cold leg, which is a direct function of reactor power; and T_{avg}, which is programmed as a function of power. The control bank rod insertion monitor calculates the RIL and the alarms for each control rod bank as follows:

$$Z_{RIL} = K_1 \ (\Delta T)_{auct} + K_2 (T_{avg})_{auct} + K_3$$

Where

Z_{RIL}	=	Rod insertion limit for affected control bank
$(\Delta T)_{auct}$	=	Highest ΔT of all loops
$(T_{avg})_{auct}$	=	Highest T_{avg} of all loops
K_1, K_2, K_3	=	Constants set to calculate Z_{RIL} in accordance with the COLR RIL

Below the upper limit, the control rod bank demand position (Z) is compared to Z_{RIL} as follows:

If $Z = Z_{RIL} + K_4$ a low alarm is actuated (K_4 is the alarm margin to RIL)

If $Z = Z_{RIL}$ a low - low alarm is actuated

Since the highest values of T_{avg} and ΔT are chosen by auctioneering, a conservatively high representation of power is used in the control rod bank insertion limit calculation.

Figure 7.7.1-2 shows a block diagram representation of the control rod bank insertion monitor and alarms. The monitor is shown in more detail on the functional diagrams shown in Figure 7.2.1-1, Sheet 9. In addition to the rod insertion monitor for the control banks, an alarm system is provided to warn the operator if any shutdown rod cluster control assembly leaves the fully withdrawn position.

Rod insertion limits are established by:

1. Establishing the allowed rod reactivity insertion at full power consistent with the purposes given above.

2. Establishing the differential reactivity worth of the control rods when moved in normal sequence.

3. Establishing the change in reactivity with power level by relating power level to rod position.

4. Linearizing the resultant limit curve. All key nuclear parameters in this procedure are measured as part of the initial and periodic physics testing program.

Any unexpected change in the position of the control bank under automatic control, or a change in coolant temperature under manual control, provides a direct and immediate indication of a change in the reactivity status of the reactor. In addition, samples are taken periodically of coolant boron concentration. Variations in concentration during core life provide an additional check on the reactivity status of the reactor, including core depletion.

7.7.1.3.4 Rod Deviation Alarm

The demanded and measured rod position signals are displayed on the control board. They are also monitored by the plant computer which provides an audible alarm whenever an individual rod position signal deviates from the other rods in the bank by a preset limit. The alarm is set in accordance with plant technical specifications.

Figure 7.7.1-3 is a block diagram of the rod deviation comparator and alarm system.

7.7.1.3.5 Rod Bottom Alarm

A rod bottom signal for the full-length rods bistable in the analog RPIS as described in Reference 4 generates the "ROD BOTTOM ROD DROP" alarm.

7.7.1.4 Plant Control System Interlocks

The listing of the Plant Control System Interlocks, along with the description of their derivations and functions, is presented in Table 7.7.1-1. It is noted that the designation numbers for these interlocks are preceded by "C". The development of these logic functions is shown in the functional diagrams (Figure 7.2.1-1, Sheets 9 to 16).

7.7.1.4.1 Rod Stops

Rod stops are provided to prevent abnormal power conditions which could result from excessive control rod withdrawal initiated by either a control system malfunction or operator violation of administrative procedures.

Rod stops are the C_1, C_2, C_3, C_4, and C_5 control interlocks identified in Table 7.7.1-1. The C_3 rod stop derived from over-temperature ΔT and the C_4 rod stop, derived from overpower ΔT are also used for turbine runback, which is discussed below.

7.7.1.4.2 Automatic Turbine Load Runback

Automatic turbine load runback is initiated by an approach to an overpower or overtemperature condition. This will prevent high power operation that might lead to an undesirable condition which, if reached, will be protected by reactor trip.

Turbine load reduction is initiated by either an overtemperature or overpower ΔT signal. Two out of four coincidence logic is used.

Inhibit relays are included in the C_3 and C_4 interlock control circuits to prevent turbine runback in the event of a loss of 120V AC Vital Power to the Overtemperature Delta T or Overpower Delta T separation relays.

A rod stop and turbine runback are initiated when

$$\Delta T > \Delta T_{rod\ stop}$$

for both the overtemperature and the overpower condition.

For either condition in general

$$\Delta T_{rod\ stop} = \Delta T_{setpoint} - B_p$$

where

B_p= a setpoint bias

where ΔT setpoint refers to the overtemperature ΔT reactor trip value and the overpower ΔT reactor trip value for the two conditions.

The turbine runback is repeated until ΔT is equal to or less than $\Delta T_{rod\ stop}$.

This function serves to maintain an essentially constant margin to trip.

7.7.1.5 Pressurizer Pressure Control

The Reactor Coolant System pressure is controlled by using either the heaters (in the water region) or the spray (in the steam region of the pressurizer) plus steam relief for large transients. The electrical immersion heaters are located near the bottom of the pressurizer. A portion of the heater group is proportionally controlled to correct small pressure variations. These variations are due to heat losses, including heat losses due to a small continuous spray. The remaining (backup) heaters are turned on when the pressurizer pressure-controlled signal demands approximately 100 percent proportional heater power. Pressurizer Pressure Control is contained within the plant Distributed Control System (DCS).

The spray nozzles are located on the top of the pressurizer. Spray is initiated when the pressure-controlled spray demand signal is above a given setpoint. The spray rate increases proportionally with increasing spray demand signal until it reaches a maximum value.

Steam condensed by the spray reduces the pressurizer pressure. A small continuous spray is normally maintained to reduce thermal stresses and thermal shock and to help maintain uniform water chemistry and temperature in the pressurizer.

Power relief valves limit system pressure for large positive pressure transients. In the event of a large load reduction, not exceeding the design plant load rejection capability, the pressurizer power-operated relief valves might be actuated for the most adverse conditions, e.g., the most negative Doppler coefficient, and the minimum incremental rod worth. The relief capacity of the power-operated relief valves is sized large enough to limit the system pressure to prevent actuation of high pressure reactor trip for the above condition. See Figure 7.2.1-1 sheet 11.

7.7.1.6 Pressurizer Water Level Control

The pressurizer operates by maintaining a steam cushion over the reactor coolant. As the density of the reactor coolant changes due to changes in reactor coolant temperature, the steam water interface moves to absorb the variations with relatively small pressure disturbances.

The water inventory in the Reactor Coolant System is maintained by the Chemical and Volume Control System. During normal plant operation, the charging flow varies to produce the flow demanded by the pressurizer water level controller (contained within the DCS). The pressurizer water level is programmed as a function of coolant average temperature, with the highest average temperature being used.

The pressurizer water level decreases as the load is reduced from full load. This is a result of coolant contraction following programmed coolant temperature reduction from full power to low power. The programmed level is designed to match as nearly as possible the level changes resulting from the coolant temperature changes. A block diagram of the Pressurizer Water Level Control System is shown on Figure 7.2.1-1 sheet 11.

To permit manual control of pressurizer water level during startup and shutdown operations, the charging flow can be manually regulated from the main control room.

7.7.1.7 Steam Generator Water Level Control

Each steam generator is equipped with a three-element feedwater flow control system which maintains a programmed water level which is a function of turbine load. The three-element Feedwater Control (FWC) System regulates the feedwater valve by continuously comparing the feedwater flow signal, the water level signal, the programmed level, and the pressure compensated steam flow signal.

The steam generator water level signal provided to the feedwater control system is derived from a median signal selector in the Feedwater DCS (Distributed Control System) which accepts the three narrow range level signal inputs for each steam generator and selects the median signal. Upon failure of one level channel, the average of the remaining two is used for control.

For the feedwater flow input signals, the two feedwater flow channels for each feedwater line are used to develop an average to control its respective feedwater regulating valve. The average of the other feedwater flows to the other steam generators is used as a “voter” so that should one of the feedwater flow channels fail, the voter signal would cause the control system to select the remaining channel that is closest to the voter signal value for continued automatic control. The system will alarm indicating the channel had failed. The voter signal only helps in determining the signal health between the two individual feedwater flow channels for a particular steam generator and is not the control signal.

For the steam flow input signals, the two steam flow channels for each steam line are used to develop an average steam flow signal to control its respective feedwater control valve. The average of the other steam generator's feedwater flows (the same "voter" signal used for FW flows describe above) is also used as a voter so that should one steam flow channel signal fail outside a predetermined limit, that signal quality is set to BAD, and the remaining steam flow channel alone would be used in the FW regulating valve control. An alarm would annunciate indicating that the steam flow channel had failed. The steam flow voter is not used as the controlling signal.

In the event that both feedwater flow signals or both steam flow signals from one steam generator fail while at power, three element flow control is no longer available for that steam generator FW flow control valve. The DCS will sense that either the validated feedwater flow or validated steam flow control signals have failed, and will cause that feedwater regulating valve to transfer control to single

element, level input only, type of automatic control. This is an interim type of control in that it gives the operator time to evaluate FW stability and to take manual action as necessary to avoid an automatic reactor trip. Single element control, though less stable than three element control, can be utilized as needed until three element flow control can be re-established.

The turbine driven main feedwater pumps' speeds are varied to maintain a programmed pressure differential between the steam header and the feed pump discharge header. The speed controller continuously compares the actual ΔP with a programmed ΔP. For these variables, steam pressure header and feedwater pressure header, three transmitter signals are used for each which input into the DCS. For normal control, the median signal is selected for each variable. Should one channel fail, the remaining steam or feedwater pressure channels then would be averaged and used for control. The ΔP setpoint is developed from the average of the steam flows from all four steam generators.

Continued delivery of feedwater to the steam generators is required as a sink for the heat stored and generated in the reactor following a reactor trip and turbine trip. An override signal closes the feedwater valves when the average coolant temperature is below a given temperature and the reactor has tripped. This signal also trips the main FW pumps when the FW Isolation Valves are tripped. Manual override of the FWC System is available at all times.

A block diagram of the Steam Generator Water Level Control System is shown in Figures 7.2.1-1 sheets 13 and 14.

7.7.1.8 <u>Steam Dump Control (SDC) Systems</u>

The Sequoyah Plant has a 50 percent loss of net load capability, the steam dump steam flow capacity is 40 percent of full load steam flow at full load steam pressure. The 10 percent loss of load is handled directly by the Rod Control System. The automatic SDC System, contained within the DCS, is able to accommodate this abnormal load rejection and to reduce the effects of the transient imposed upon the Reactor Coolant System. By bypassing main steam directly to the condenser, an artificial load is thereby maintained on the Primary System. The Rod Control System can then reduce the reactor temperature to a new equilibrium value without causing overtemperature and/or overpressure conditions.

If the difference between the reference T_{avg} (T_{ref}) based on turbine impulse chamber pressure and the lead/lag compensated auctioneered T_{avg} exceeds a predetermined amount, and the control interlock (C7) is satisfied, a demand signal will be provided to actuate the SDC System to maintain the RC System temperature within control range until a new equilibrium condition is reached.

To prevent actuation of steam dump on small load perturbations, an independent load rejection sensing circuit is provided. This function is performed by an independent DCS processing group. This circuit senses the rate of decrease in the turbine load as detected by the turbine impulse chamber pressure. Control interlock (C7) is provided to unblock the dump valves when the rate of load rejection exceeds a preset value corresponding to a 10 percent step load decrease.

A block diagram of the SDC System is shown on Figure 7.7.1-4.

7.7.1.8.1 Load Rejection Steam Dump Controller

This circuit prevents large increase in reactor coolant temperature following a large, sudden load decrease. The error signal is a difference between the lead/lag compensated auctioneered T_{avg} and the T_{ref} which is based on turbine impulse chamber pressure.

The T_{avg} signal is the same as that used in the RC System. The lead/lag compensation for the T_{avg} signal is to compensate for lags in the plant thermal response and in valve positioning. Following a sudden load decrease, T_{ref} is immediately decreased and T_{avg} tends to increase, thus generating an immediate demand signal for steam dump. Steam dump terminates as the error comes within the maneuvering capability of the control rods.

7.7.1.8.2 Reactor Trip Steam Dump Controller

Following a reactor trip, the load rejection steam dump controller is defeated and the reactor trip steam dump controller becomes active. Since control rods are not available in this situation, the demand signal is the error signal between the lead/lag compensated auctioneered T_{avg} and the no load T_{ref}. When the error signal exceeds a predetermined setpoint the dump valves are tripped open in a prescribed sequence. As the error signal reduces in magnitude indicating that the RC System is T_{avg} being reduced toward the reference no load value, the dump valves are modulated by the reactor trip controller to regulate the rate of removal of decay heat and thus gradually establish the equilibrium hot standby condition.

The error signal determines whether a group of valves is to be tripped open or modulated open. In either case, they are modulated when the error is below the trip-open setpoints.

7.7.1.8.3 Steam Header Pressure Controller

Residual heat removal is maintained by the steam generator pressure controller (manually selected) which controls the amount of steam flow to the condensers. This controller operates a portion of the same steam dump valves to the condensers which are used during the initial transient following turbine and reactor trip or load rejection.

7.7.1.9 In-Core Instrumentation

7.7.1.9.1 Thermocouples

See Section 7.6.10.
.

7.7.1.9.2 Movable Neutron Flux Detector Drive System

Miniature fission chamber detectors can be remotely positioned in retractable guide thimbles to provide flux mapping of the core. See Reference 5 for neutron flux detector parameters. The stainless steel detector shell is welded to the leading end of helical wrap drive cable and to stainless steel sheathed coaxial cable. The retractable thimbles, into which the miniature detectors are driven, are pushed into the reactor core through conduits which extend from the bottom of the reactor vessel down through the concrete shield area and then up to a thimble seal table.

The thimbles are closed at the leading ends, are dry inside, and serve as the pressure barrier between the reactor water pressure and the containment atmosphere. Mechanical seals between the retractable thimbles and the conduits are provided. During reactor operation, the retractable thimbles are stationary. They are extracted downward from the core during refueling to avoid interference within the core. A space above the seal table is provided for the retraction operation.

The drive system for the insertion of the miniature detectors consists basically of drive assemblies, 5-path rotary transfer operation selector assemblies, and 10-path rotary transfer selector assemblies, as shown in Figure 7.7.1-5. These assemblies are described in Reference 5. The drive system pushes hollow helical wrap drive cables into the core with the miniature detectors attached to the leading ends of the cables and small diameter sheathed coaxial cables threaded through the hollow centers back to the ends of the drive cables. Each drive assembly consists of a gear motor which pushes a helical wrap drive cable and a detector through a selective thimble path by means of a special drive box and includes a storage device that accommodates the total drive cable length.

The leakage detection and gas purge provisions are discussed in Reference 5. The carbon dioxide gas purge feature is not used at Sequoyah.

Manual isolation valves (one for each thimble) are provided for closing the thimbles. When closed, the valve forms a 2500-lb/in^{2}g barrier. The manual isolation valves are not designed to isolate a thimble while a detector/drive cable is inserted into the thimble. The detector/drive cable must be retracted to a position above the isolation valve prior to closing the valve.

A small leak would not prevent access to the isolation valves and thus a leaking thimble could be isolated during a hot shutdown. A large leak might require cold shutdown for access to the isolation valve.

7.7.1.9.3 Control and Readout Description

The Control and Readout System provides means for inserting the miniature neutron detectors into the reactor core and withdrawing the detectors while plotting neutron flux versus detector position. The Control System consists of two sections, one physically mounted with the drive units, and the other contained in the control room. Limit switches in each transfer device

provide feedback of path selection operation. Each gear box drives an encoder for position feedback. One 5-path operation selector is provided for each drive unit to insert the detector in one of five functional modes of operation. A 10-path rotary transfer assembly is a transfer device that is used to route a detector into any one of up to ten selectable paths. A common path is provided to permit cross calibration of the detectors.

The control room contains the necessary equipment for control, position indication, and flux recording for each detector. Additional panels are provided for such features as drive motor controls, core path selector switches, plotting and gain controls.

A "flux-mapping" consists, briefly, of selecting (by panel switches) flux thimbles in given fuel assemblies at various core quadrant locations. The detectors are driven to the top of the core and stopped automatically. An x-y plot (position versus flux level) is initiated with the slow withdrawal of the detectors through the core from top to a point below the bottom. In a similar manner other core locations are selected and plotted. Each detector provides axial flux distribution data along the center of a fuel assembly. Various radial positions of detectors may then be compared to obtain a flux map for a region of the core.

The thimbles are distributed nearly uniformly over the core with about the same number of thimbles in each quadrant. The number and location of these thimbles have been chosen to permit measurement of local to average peaking factors to an accuracy of ± 5 percent (95 percent confidence). Measured nuclear peaking factors will be increased by 5 percent to allow for this accuracy. If the measured power peaking is larger than acceptable, reduced power capability will be indicated.

Operating plant experience has demonstrated (Reference 6) the adequacy of the in-core instrumentation in meeting the design bases stated.

7.7.1.10 Control Board

The control board functional layout is shown on Figure 7.1.4-1.

Control board switches and associated lights are furnished in modules. Modules provide a degree of physical protection for the switches, associated lights, and wiring.

The control board layout is based on operator ease in relating the control board devices to the physical plant and in determining at a glance the status of related equipment. This is referred to as providing a functional layout. Within the boundaries of a functional layout, modules are arranged in columns of control functions associated with separation trains defined for the reactor protection and engineered safeguards systems. TVA approved wire is used within the module and between the module and the first termination point.

Modular train column wiring is formed into wire bundles and carried to metal wireways (gutters). Gutters are run into metal vertical wireways (risers). The risers are the interface between field wiring and control board wiring. Risers are arranged to maintain the separated routing of the field wire trays.

Mutually redundant safety train wiring is routed so as to maintain a minimum of six-inch air separation between wires associated with different trains. Where such air separation is not

available, barriers are provided in lieu of air space. A device such as braided sheath material (known as shielding and bonding cable) is used to provide a barrier in lieu of the 6-inch dimension. An example of this sheath material is Belden Braid. When this sheath material is used to provide physical separation, it is sized and secured to the wire bundle.

In order to maintain separation between wiring associated with different trains, mutually redundant safety train wiring is not terminated on a single device. Backup manual actuation switches link the separate trains by mechanical means to provide greater reliability of operator action for the manual reactor trip function and also for the manual ESF actuations. The linked switches are themselves redundant so that operation of either set of linked switches will actuate Safety Train A and Safety Train B simultaneously. For example, the manual reactor trip circuit will have an "A" train switch and a "B" train switch in different board locations not linked in any way. The "A" train switch may be linked mechanically to a backup "B" train switch, and similarly for the "B" train switch linked with a backup "A" train switch.

7.7.1.11 Comparison of Plant Control (PC) Systems with the Donald C. Cook Station

The functional design of the Sequoyah Nuclear Plant Control Systems is basically the same as that employed on the Donald C. Cook installation. The Steam Dump Control System differs because of optional control features.

Each unit of the Donald C. Cook Station has the capability for accepting up to a 100 percent net load rejection via steam dump without reactor trip, whereas each unit of the Sequoyah Station has a 50 percent net load rejection without trip via steam dump. Each station employs a Rod Control System that assumes a step change of 10 percent of the load. The steam dump capacity of Sequoyah is 40 percent of full load steam at full load steam pressure, whereas the steam dump capacity of Donald C. Cook is 85 percent which is provided by additional steam dump valves plus additional logic to trip open these valves on large differences between auctioneered T_{avg} and T_{ref}. The steam dump capacity of 40 percent of the Sequoyah Station, is sufficient to maintain the steam pressure below the steam generator relief valve setpoint in the event of a turbine trip.

In translating the functional requirements in control equipment during the detailed design of the plant, there may be minor changes in actual hardware. Specific functional requirements are, however, accomplished with the same reliability as on the Donald C. Cook design.

7.7.1.12 Anticipated Transients Without Scram (ATWS) Mitigating System Actuation Circuitry (AMSAC)

The design of the AMSAC system shall comply with 10 CFR 50.62 "Requirements for Reduction of Risk from ATWS Events for Light-Water-Cooled Nuclear Power Plants." The function of AMSAC is to mitigate the effects of an ATWS by providing alternate means of tripping the main turbine and actuating auxiliary feedwater (AFW) flow independent from the reactor protection system (RPS). AMSAC actuation will mitigate a common mode failure within RPS upon detection of low-low steam generator levels existing in three-out-of-four steam generators coincident with plant power levels above approximately 40 percent. This actuation will prevent reactor coolant system (RCS) over-pressurization, maintain fuel integrity, and meet 10 CFR 100 radiation release requirements.

ASMAC is not required to be evaluated within the plant design basis and therefore, is not addressed in FSAR Chapters 4.0 and 15.0.

Safety Requirements

The AMSAC system has no safety-related requirements, as per the ATWS final rule (10 CFR 50.62), but its implementation shall be such that it will not degrade the RPS, the AFW system or other safety-related systems.

Redundancy

There are no redundancy requirements for the AMSAC system, however, appropriate coincidence logic shall be utilized to avoid inadvertent actuation.

Electrical Independence Requirements

AMSAC input and output signals shall be isolated from the RPS, AFW, and other safety-related systems with isolation devices.

Seismic Requirements

Seismic qualification for the AMSAC system is not required. However, the AMSAC system shall be designed so as not to degrade the seismic qualification of other plant systems for which seismic qualification is required.

7.7.2 Analysis

The Plant Control Systems are designed to assure high reliability in any anticipated operational occurrences. Equipment used in these systems is designed and constructed to maintain a high level of reliability.

Proper positioning of the control rods is monitored in the control room by bank arrangements of the individual position column meters for each rod cluster control assembly. A rod deviation alarm alerts the operator of a deviation of one rod cluster control assembly from the other rods in that bank position. There are also insertion limit monitors with visual and audible annunciation. A rod bottom alarm signal is provided to the control room for each full length rod cluster control assembly. Four long ex-core ion chambers also detect asymmetrical flux distribution indicative of rod misalignment.

Overall reactivity control is achieved by the combination of soluble boron and rod cluster control assemblies. Long-term regulation of core reactivity is accomplished by adjusting the concentration of boric acid in the reactor coolant. Short-term reactivity control for power changes is accomplished by the Plant Control System which automatically moves rod cluster control assemblies. This system uses input signals including neutron flux, coolant temperature, and turbine load.

The Plant Control Systems will prevent an undesirable condition in the operation of the plant that, if reached, will be protected by reactor trip. The description and analysis of this protection is covered in Section 7.2. Worst case failure modes of the Plant Control Systems are postulated in the analysis of off-design operational transients and accidents covered in Chapter 15, such as the following:

1. Uncontrolled rod cluster control assembly withdrawal from a subcritical condition.

2. Uncontrolled rod cluster control assembly withdrawal at power.

3. Rod cluster control assembly misalignment.

4. Loss of external electrical load and/or turbine trip.

5. Loss of all alternating current power to the station auxiliaries (station blackout).

6. Excessive heat removal due to feedwater system malfunctions.

7. Excessive load increase.

8. Accidental depressurization of the Reactor Coolant System.

These analyses do show that a reactor trip setpoint is reached in time to protect the health and safety of the public under these postulated incidents and that the resulting coolant temperatures produce a DNBR well above the limiting value. Thus, there will be no cladding damage and no release of fission products to the Reactor Coolant System under the assumption of these postulated worst case failure modes of the Plant Control System.

7.7.2.1 Separation of Protection and Control Systems

In some cases it is advantageous to employ control signals derived from individual protection channels through isolation amplifiers contained in the protection channel. As such, a failure in the control circuitry does not adversely affect the protection channel. Accordingly, this failure mode meets the requirements of GDC 23 (1971 Criteria). Test results have shown that a short circuit, or the application of 118 volts alternating current or 140-volts direct current on the isolated output portion of the circuit (is the nonprotection side of the circuit) will not affect the input (protective) side of the circuit.

Where a single random failure can cause a control system action that results in a generating station condition requiring protective action and can also prevent proper action of a protection system channel designed to protect against the condition, the remaining redundant protection channels are capable of providing the protective action even when degraded by a second random failure. This meets the applicable requirements of Section 4.7 of IEEE-279.

7.7.2.2 Response Considerations of Reactivity

Reactor shutdown with control rods is completely independent of the control functions since the trip breakers interrupt power to the full length rod drive mechanisms regardless of existing

control signals. The design is such that the system can withstand accidental withdrawal of control groups or unplanned dilution of soluble boron without exceeding acceptable fuel design limits. Thus the design meets the applicable requirements of GDC 21 (1971 Criteria).

No single electrical or mechanical failure in the rod control system could cause the accidental withdrawal of a single rod cluster control assembly from the partially inserted bank at full power operation. The operator could deliberately withdraw a single rod cluster control assembly in the control bank; this feature is necessary in order to retrieve a rod, should one be accidentally dropped. In the extremely unlikely event of simultaneous electrical failures which could result in single withdrawal, rod deviation would be displayed on the plant annunciator, and the rod position indicators would indicate the relative positions of the rods in the bank. Withdrawal of a single rod cluster control assembly by operator action, whether deliberate or by a combination of errors, would result in activation of the same alarm and the same visual indications.

Each bank of control and shutdown rods in the system is divided into two groups of up to four or five* mechanisms each. The rods comprising a group operate in parallel through multiplexing thyristors. The two groups in a bank move sequentially such that the first group is always within one step of the second group in the bank. A definite schedule of actuation or deactuation of the stationary gripper, movable gripper, and lift coils of a mechanism is required to withdraw the rod cluster control assembly attached to the mechanism. Since the four stationary grippers, movable grippers, and lift coils associated with the rod cluster control assemblies of a rod group are driven in parallel, any single failure which could cause rod withdrawal would affect a minimum of one group of rod cluster control assemblies. Mechanical failures are in the direction of insertion, or immobility.

The identified multiple failure involving the least number of components consists of open circuit failure of the proper 2 out of 16 wires connected to the gate of the lift coil thyristors. The probability of open wire (or terminal) failure is 0.016×10^{-6} per hour by MIL HDB217A. These wire failures would have to be accompanied by failure or disregard of the indications mentioned above. The probability of this occurrence is therefore too low to have any significance.

Concerning the human element, to erroneously withdraw a single rod cluster control assembly, the operator would have to improperly set the bank selector switch, the lift coil disconnect switches, and in-hold-out switch. In addition, the three indications would have to be disregarded or ineffective. Such series of errors would require a complete lack of understanding and administrative control. A probability number cannot be assigned to a series of errors such as these.

The RPI System provides direct visual displays of each control rod assembly position. The plant computer alarms for deviation of rods from their banks. In addition, a rod insertion limit monitor provides low and low-low alarms that are audible and visual to warn the operator of an approach to an abnormal condition due to dilution. The low and low-low control bank rod insertion alarms alert operators to take action to restore margin. The facility reactivity control systems are such that acceptable fuel damage limits will not be exceeded even in the event of a single malfunction of either system.

An important feature of the Control Rod System is that insertion is provided by gravity fall of the rods.

---

* U1 is permitted to operate with the location H-8 Control Rod Assembly removed during U1C24 and U1C25. Therefore it will have groups of up to four in all banks of the Control and Shutdown rods.

*U2 is permitted to operate with the location H-8 Control Rod Assembly removed during Unit 2 Cycle 24 (U2C24) and Cycle 25 (U2C25). Therefore, Unit 2 will have groups of up to four in all banks of the Control and Shutdown rods.

In all analyses involving reactor trip, the single, highest worth rod cluster control assembly is postulated to remain untripped in its full out position.

One means of detecting a stuck control rod assembly is available from the actual rod position information displayed on the control board. The control board position readouts, one for each full length rod, gives the plant operator the actual position of the rod in steps. The indications are grouped by banks (e.g., Control Bank A, Control Bank B, etc.) to indicate to the operator the deviation of one rod with respect to other rods in a bank. This serves as a means to identify rod deviation.

The plant computer monitors the actual position of all rods. Should a rod be misaligned from the other rods in that bank by more than 15 inches, the rod deviation alarm is actuated.

Misaligned rod cluster control assemblies are also detected and alarmed in the control room via the Flux Tilt Monitoring System which is independent of the plant computer.

Isolated signals derived from the Nuclear Instrumentation System are compared with one another to determine if a preset amount of deviation of average power has occurred. Should such a deviation occur, the comparator output will operate a bistable unit to actuate a control board annunciator. This alarm will alert the operator to a power imbalance caused by a misaligned rod. By use of individual rod position readouts, the operator can determine the deviating control rod and take corrective action.

Thus the design of the Plant Control Systems meets the applicable requirements of GDC 13 and GDC 25 (1971 Criteria).

The Rod System can compensate for the reactivity effects of fuel/water temperature changes accompanying power level changes over the full range from full load to no load at the design maximum load rate of change. Automatic control of the rods is, however, limited to the range of approximately 15 percent to 100 percent of rating.

The Boron System (by the use of administrative measures) will maintain the reactor in the cold shutdown state irrespective of the disposition of the control rods.

The Rod System can compensate for xenon burnout reactivity transients over the allowed range of rod travel. Xenon burnout transients of larger magnitude must be accommodated by boration or by reactor trip (which eliminates the burnout). The Boron System is discussed in section 9.3.4.

The overall reactivity control achieved by the combination of soluble boron and rod cluster control assemblies meets the applicable requirements of GDC 26 (1967 Criteria).

7.7.2.3 Step Load Changes Without Steam Dump

The Plant Control System restores equilibrium conditions, without a trip, following a ± 10 percent step change in load demand, over the 15 to 100 percent power range for automatic control. Steam dump is blocked for load decrease less than or equal to 10 percent. A load demand greater than full power is prohibited by the turbine control load limit devices.

The Plant Control System minimizes the reactor coolant average temperature deviation during the transient within a given value and restores average temperature to the programmed setpoint. Excessive pressurizer pressure variations are prevented by using spray and heaters and power relief valves in the pressurizer.

The Control System will limit nuclear power overshoot to acceptable values following a 10 percent increase in load to 100 percent.

7.7.2.4 Loading and Unloading

Ramp loading and unloading of 5 percent per minute can be accepted over the 15 to 100 percent power range under automatic control without tripping the plant. The function of the Control System is to maintain the coolant average temperature as a function of turbine-generator load.

The coolant average temperature increases during loading and causes a continuous insurge to the pressurizer as a result of coolant expansion. The sprays limit the resulting pressure increase. Conversely, as the coolant average temperature is decreasing during unloading, there is a continuous outsurge from the pressurizer resulting from coolant contraction. The pressurizer heaters limit the resulting system pressure decrease. The pressurizer water level is programmed such that the water level is above the setpoint for heater cutout during the loading and unloading transients. The primary concern during loading is to limit the overshoot in nuclear power and to provide sufficient margin in the overtemperature ΔT setpoint.

7.7.2.5 Load Rejection Furnished by Steam Dump System

When a load rejection occurs, if the difference between the required temperature setpoint of the Reactor Control System and the actual average temperature exceeds a predetermined amount, a signal will actuate the steam dump to maintain the Reactor Control System temperature within control range until a new equilibrium condition is reached.

The reactor power is reduced at a rate consistent with the capability of the Rod Control System. Reduction of the reactor power is automatic. The steam dump flow reduction is as fast as rod cluster control assemblies are capable of inserting negative reactivity.

The Rod Control System can then reduce the reactor temperature to a new equilibrium value without causing overtemperature and/or overpressure conditions. The steam dump steam flow capacity is 40 percent of full load steam flow at full load steam pressure.

The steam dump flow reduces proportionally as the control rods act to reduce the average coolant temperature. The artificial load is therefore removed as the coolant average temperature is restored to its programmed equilibrium value.

The dump valves are modulated by the reactor coolant average temperature signal. The required number of steam dump valves can be tripped quickly to stroke full open or modulate, depending upon the magnitude of the temperature error signal resulting from loss of load.

7.7.2.6 Turbine-Generator Trip With Reactor Trip

Whenever the turbine-generator unit trips at an operating power level above 50 percent power, the reactor also trips. The unit is operated with a programmed average temperature as a

function of load, with the full load average temperature significantly greater than the equivalent saturation pressure of the safety valve setpoint. The thermal capacity of the Reactor Control System is greater than that of the secondary system, and because the full load average temperature is greater than the no load temperature, a heat sink is required to remove heat stored in the reactor coolant to prevent actuation of steam generator safety valves for a trip from full power. This heat sink is provided by the combination of controlled release of steam to the condenser and by makeup of cold feedwater to the steam generators.

The Steam Dump System is controlled from the reactor coolant average temperature signal whose setpoint values are programmed as a function of turbine load. Actuation of the steam dump is rapid to prevent actuation of the steam generator safety valves. With the dump valves open, the average coolant temperature starts to reduce quickly to the no load setpoint. A direct feedback of temperature acts to proportionally close the valves to minimize the total amount of steam which is bypassed.

Following the turbine trip, the feedwater flow is cut off when the average coolant temperature decreases below a given temperature or when the steam generator water level reaches a given high level.

Additional feedwater makeup can then be controlled manually to restore and maintain steam generator water level while assuring that the reactor coolant temperature is at the desired value. Residual heat removal is maintained by the steam header pressure controller (manually selected) which controls the amount of steam flow to the condensers. This controller operates a portion of the same steam dump valves to the condensers which are used during the initial transient following turbine and reactor trip.

The pressurizer pressure and water level fall rapidly during the transient because of coolant contraction. The pressurizer water level is programmed so that the level following the turbine and reactor trip is adequate to protect the pressurizer heaters. At low pressurizer level, letdown isolates, the heaters are deenergized, and the Chemical and Volume Control System will increase charging flow to restore water level in the pressurizer. Heaters are then turned on to restore pressurizer pressure to normal.

The Steam Dump and Feedwater Control Systems are designed to prevent the average reactor coolant temperature from falling below the core design allowable cooldown temperature following the trip (rods at the insertion limit) to ensure adequate reactivity shutdown margin without emergency borating. If the Steam Dump and Feedwater Control Systems cools the average reactor coolant temperature below allowable, emergency boration will be administratively initiated.

7.7.3 References

1. Reference not used.

2. Lipchak, J. B., and Stokes, R. A., "Nuclear Instrumentation System," WCAP 7669, April 1971.

3. Blanchard, A. E., and Katz, D. N., "Solid-State Rod Control System, Full Length," WCAP 7778, December 1971.

4. Blanchard, A. E., "Rod Position Monitoring," WCAP 7571, March 1971.

5. Loving, J. J., "In-Core Instrumentation (Flux-Mapping System and Thermocouples)," WCAP 7607, July 1971.

6. Barry, R. F., et al , "Power Distribution Monitoring in the R. E. Ginna PWR," WCAP 7756, September 1971.

7. "General Design Criteria for Nuclear Power Plants," Appendix A to Title 10CFR50, July 7, 1971.

8. The Institute of Electrical and Electronic Engineers, Inc., "IEEE Standard Criteria for Protection System for Nuclear Power Generating Stations," IEEE Std 279-1971.

9. MIL HDB217A, "Reliability Prediction of Electronic Equipment," December 30, 1971.

10. WCAP-14036 R1, WCAP-13632 R1.

11. NRC SER for TS Change No. 99-08 dated February 29, 2000.

TABLE 7.7.1-1
PLANT CONTROL SYSTEM INTERLOCKS

Designation	Derivation	Function
C-1	1/2 Neutron flux (intermediate range) above setpoint	Blocks automatic and manual control rod withdrawal
C-2	1/4 Nuclear Power (power range) above setpoint	Blocks Automatic and manual control rod withdrawal
C-3	2/4 Overtemperature ΔT above setpoint	Blocks automatic and manual control rod withdrawal
		Actuates turbine runback via load reference
		Defeats remote load dispatching
C-4	2/4 Overpower ΔT above setpoint	Blocks automatic and manual control rod withdrawal
		Actuates turbine runback via load reference
		Defeats remote load dispatching
C-5	1/1 Turbine impulse chamber pressure below setpoint	Defeats remote load dispatching
		Blocks automatic control rod withdrawal
C-7	1/1 Time derivative (absolute value) of Turbine impulse chamber pressure (decrease only) above setpoint	Makes steam dump valves available for either tripping or modulation
C-8	Turbine trip, 2/3 emergency trip header pressure below set point or 4/4 turbine valves closed	Indicates anticipatory reactor trip if above P-9
	No turbine trip, 2/3 emergency trip header pressure above set point and 1/4 turbine-inlet line stop valves not closed	
C-9	*1/2 condenser pressure above setpoint or All Circulation water pump breakers open	Blocks steam dump to condenser
C-11	1/1 Bank D control rod position above setpoint	Blocks automatic rod withdrawal

*Median of three condenser pressures above setpoint, or all circulation water pump breakers open.

Best Available Historical Image

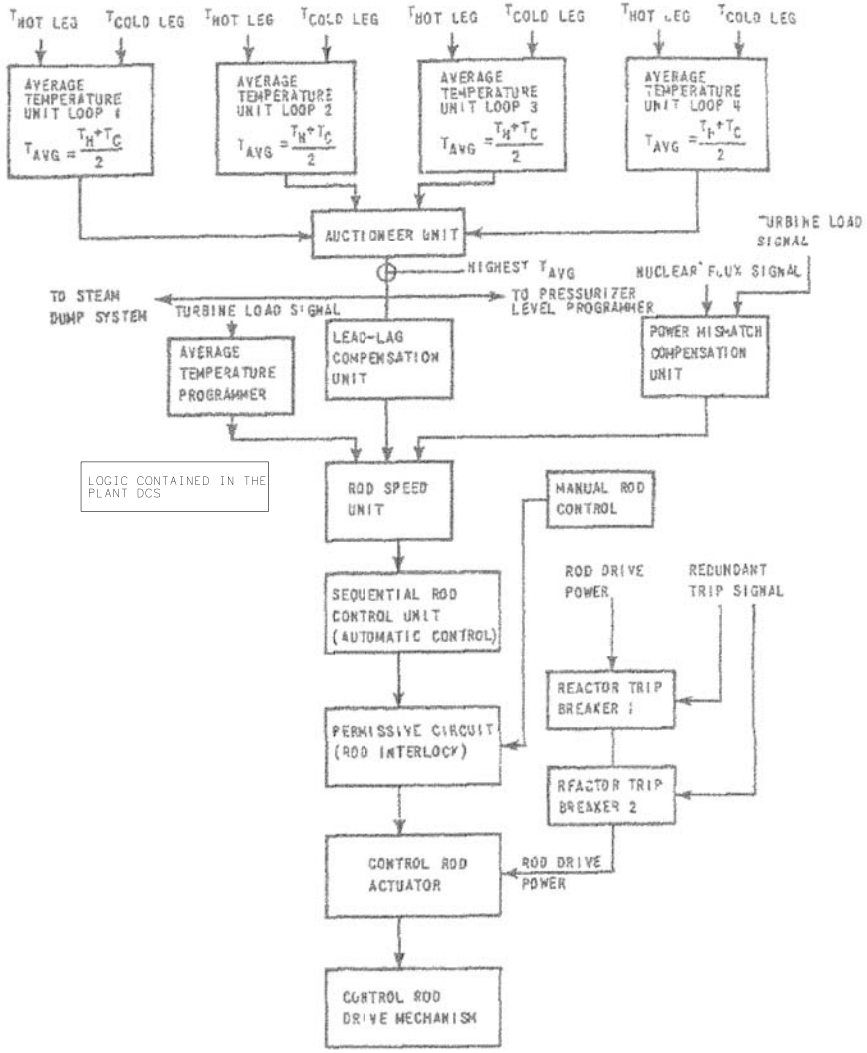

SEQUOYAH NUCLEAR PLANT
FINAL SAFETY
ANALYSIS REPORT

FIGURE 7.7.1-1
SIMPLIFIED BLOCK DIAGRAM
OF REACTOR CONTROL SYSTEM
(REVISED BY AMENDMENT 28)

CAD MAINTAINED DRAWING

Best Available Historical Image

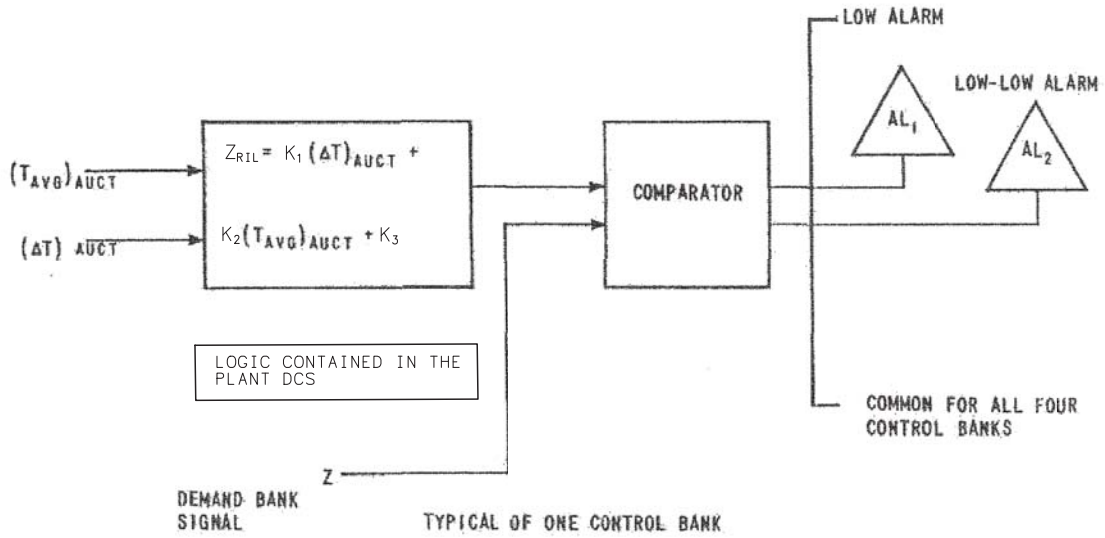

NOTE: 1. ANALOG CIRCUITRY IS USED FOR THE COMPARATOR NETWORK

2. COMPARISON IS DONE FOR ALL CONTROL BANKS

SEQUOYAH NUCLEAR PLANT
FINAL SAFETY
ANALYSIS REPORT

FIGURE 7.7.1-2
CONTROL BANK ROD
INSERTION MONITOR
(REVISED BY AMENDMENT 28)

CAD MAINTAINED DRAWING

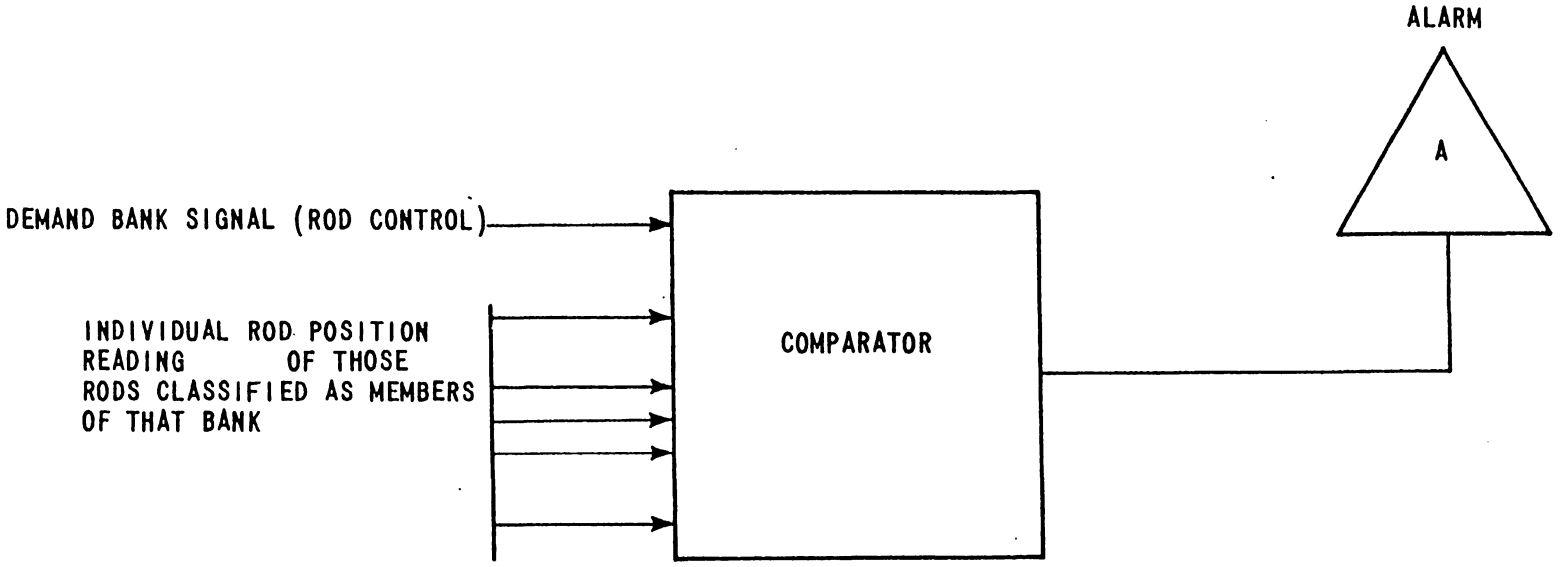

NOTE:
1. DIGITAL OR ANALOG SIGNALS MAY BE USED FOR THE COMPARATOR COMPUTER INPUTS.
2. THE COMPARATOR WILL ENERGIZE THE ALARM IF THERE EXISTS A POSITION DIFFERENCE GREATER THAN A PRESENT LIMIT BETWEEN ANY INDIVIDUAL ROD AND THE DEMAND BANK SIGNAL.
3. COMPARISON IS INDIVIDUALLY DONE FOR ALL CONTROL BANKS.

Figure 7.7.1-3 Rod Deviation Comparator

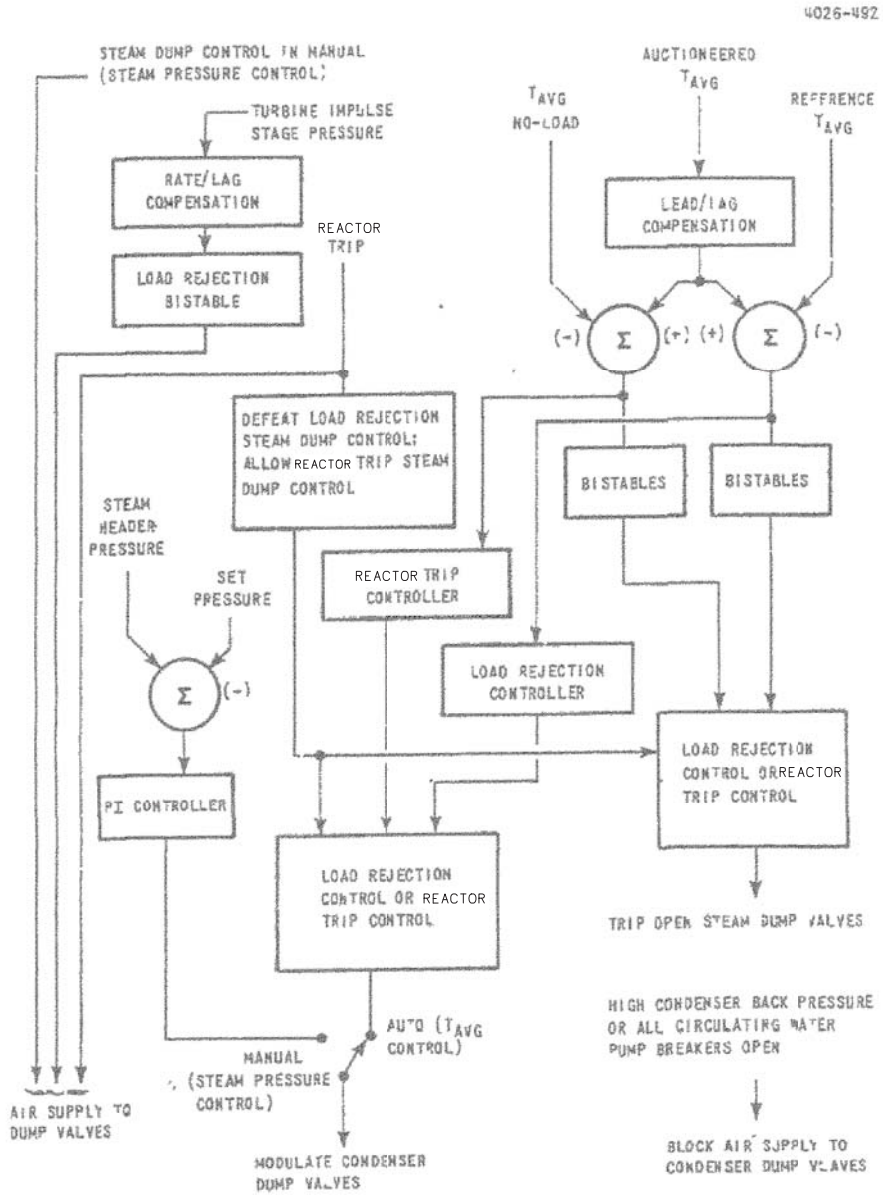

NOTE: STEAM DUMP CONTROLS CONTAINED WITHIN THE PLANT DCS.

SEQUOYAH NUCLEAR PLANT
FINAL SAFETY ANALYSIS REPORT

FIGURE 7.7.1-4
BLOCK DIAGRAM OF STEAM DUMP CONTROL SYSTEM
(REVISED BY AMENDMENT 28)

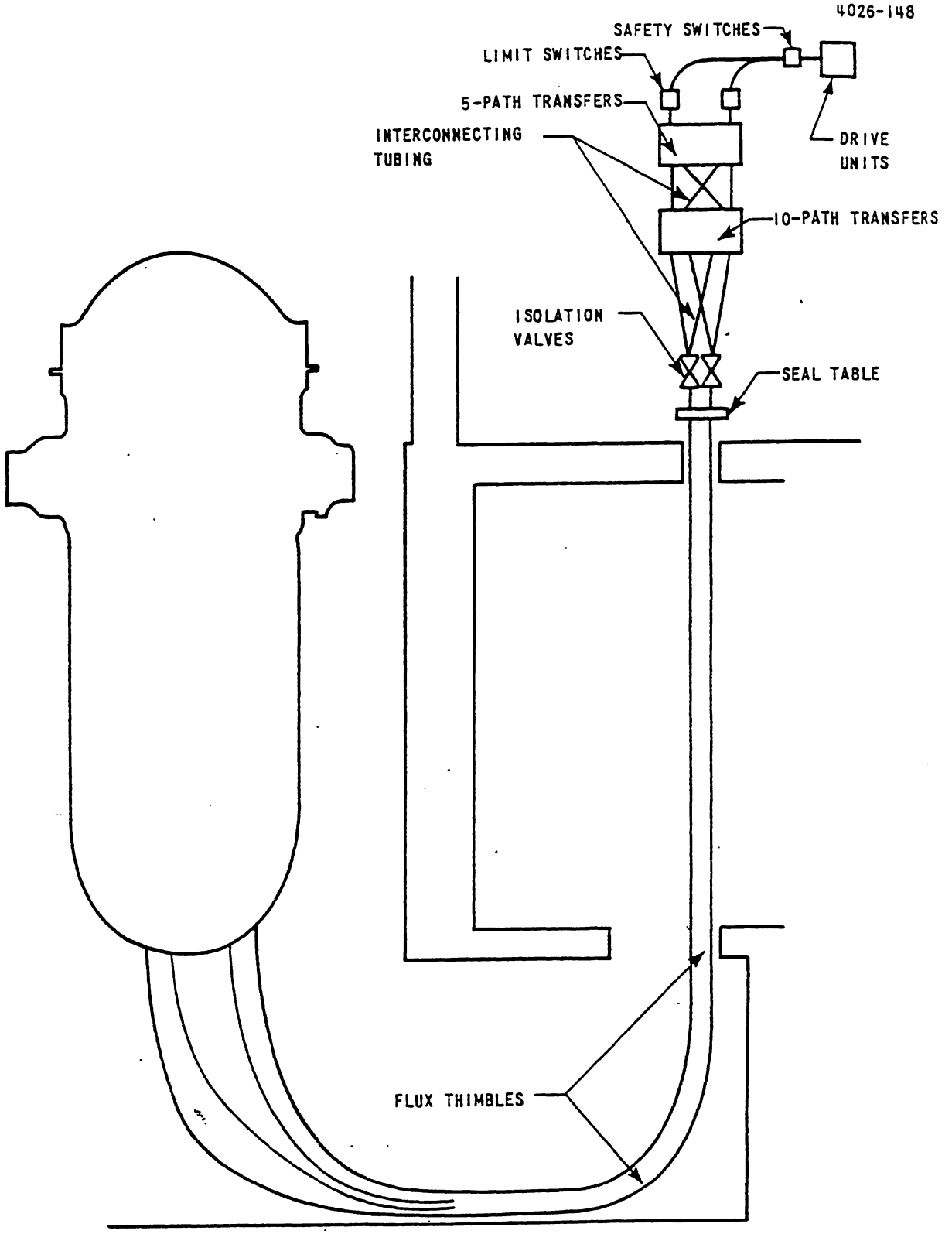

Figure 7.7.1-5 Basic Flux-Mapping System

Revised by Amendment 13

APPENDIX 7A

INSTRUMENTATION INDENTIFICATIONS AND SYMBOLS

LIST OF CONTENTS

Section	Title	Page
7A.1	IDENTIFICATION SYSTEM	7A-2
7A.1.1	Functional Identification	7A-2
7A1.1.1	Principal Function	7A-2
7A.1.1.2	Measured Variable	7A-2
7A.1.1.3	Readout or Passive Functions	7A-2
7A.1.1.4	Modifying Letters	7A-3
7A.1.1.5	Tagging Symbols	7A-3
7A.1.1.6	Special Identifying Letters	7A-3
7A.1.1.7	Pilot Lights	7A-3
7A.1.2	System Identification	7A-3
7A.1.2.1	Identification Numbers	7A-3
7A.1.2.2	Instruments Common to Multiple Process Systems	7A-3
7A.1.3	Loop Identification	7A-3
7A.1.3.1	Instruments Common to Multiple Control Loops	7A-3
7A.1.3.2	Multiple Instruments with a Common Function	7A-4
7A.2	SYMBOLS	7A-4
7A.2.1	Instrument Symbols	7A-4

LIST OF FIGURES

Number	Title
7A-1	Table I. Instrument Identification, Combination of Letters
7A-2	Table II. Mechanical System Identification Numbers
7A-3	Mechanical Flow and Control Diagram Symbols
7A-4	Mechanical Basic Instrumentation and Radiation Symbols, General
7A-5	Mechanical Application of Basic Instrumentation Symbols
7A-6	Mechanical Digital Logic Symbols (and/or) General

APPENDIX 7A - INSTRUMENTATION IDENTIFICATIONS AND SYMBOLS

A standard set of instrumentation symbols and identifications is provided in this appendix to aid in the interpretation of the figures reproduced from TVA drawings.

The identification and symbols include the following designation:

1. Instrument identification letters.

2. Process system numbers.

3. Flow and control diagram symbols.

4. Basic instrumentation and radiation symbols.

5. Basic digital logic symbols.

7A.1 IDENTIFICATION SYSTEM

Each instrument is identified by a series of letters and numbers to designate the function, the process system, and the control loop.

7A.1.1 Functional Identification

The functional identification of an instrument consists of letters from Table I in Figure 7A-1 and generally includes one uppercase first letter covering the measured or initiating variable; and one or more uppercase succeeding letters covering the function of the individual instruments. The exceptions to this rule are as follows:

1. The use of chemical symbols, e.g., pH, Cu, Na, as a first-letter entity to better identify some of the measured variables.

2. The use of An and Px in the succeeding letters to identify analyzer and power supply, respectively.

7A1.1.1 Principal Function

The functional identification of an instrument is made according to the principal function and not according to the construction. Thus, a differential-pressure transmitter used for flow measurement is identified as an FT, not a PdT. A pressure indicator and a pressure switch connected to the output of a pneumatic level transmitter is identified as LI and LS, respectively. (Note: An instrument identified may also have secondary purposes, i.e., a signal originating from a pressure transmitter that is proportional to pressure may also be used as an inferred measurement of temperature).

7A.1.1.2 Measured Variable

In an instrument loop, the first letter of the functional identification indicates the measured (initiating) or the inferred variable and the manipulated variable. Thus, a control valve varying

flow according to the dictates of a level controller is an LCV, not an FCV. Also, if two or more measured variable signals are combined to control a particular variable, the instrument processing the combined signals is identified in accordance with the controlled variable (i.e., cascade control).

7A.1.1.3 Readout or Passive Functions

The one or more succeeding letters of the functional identification designates one or more readout or passive functions, or output functions, or both. The readout or passive functional letters, such as R for recording and I for indicating, follow the first letter in sequence. The output functional letters, such as C for control and S for switch, follow these in sequence except that output letter C (control) shall precede output letter V (valve) and O (operator), e.g., HCV, a hand-actuated control valve. However, if there are no readout or passive functional letters, then the output functional letters follow the first letter in sequence.

7A.1.1.4 Modifying Letters

Modifying letters may modify either a first letter or the succeeding letters, as applicable. However, modifying letters, if used, are interposed so that they are placed immediately following the letter they modify except letter S for solenoid which precedes output letter V (valve), e.g., FSV designates a solenoid-actuated flow valve.

7A.1.1.5 Tagging Symbols

An instrument tagging designation on a control diagram may be drawn with as many circular tagging symbols as there are measured variables or outputs. Thus, a recorder charting temperature and flow may be identified by two tangent circles where possible, one inscribed TR-3-31 and the other FR-3-31. The instrument then would be designated TR/FR-3-31.

7A.1.1.6 Special Identifying Letters

The measured variable letter X (special), has been included in Table I of Figure 7A-1 to cover unlisted variables that are used to a limited extent. It may also be used for an instrument function. Therefore, the letter may have any number of meanings as a first letter and any number of meanings as a succeeding letter.

Any first letter, if used in combination with the modifying letter, e.g., d (differential), represents, as shown on Table I for pressure differential, a new and separate measured variable, and the combination shall be treated as a first-letter entity. Thus, instruments PdI and PI measure two different variables, namely, differential pressure and pressure.

7A.1.1.7 Pilot Lights

A pilot light that is part of an instrument loop is identified by a first letter Z (zone or position), followed by a succeeding letter, I or A (I - indicating, A - alarm). A pilot light that serves only as position indication associated with hand switches need not be identified.

7A.1.2 System Identification

The system identification of an instrument uses a number assigned to the process system of which the instrument is a part. Each process system, e.g., boiler feedwater, extraction, reactor water cleanup, has been assigned a system identification number.

7A.1.2.1 Identification Numbers

The system identification numbers are listed in Table II in Figure 7A-2. The system identification number follows the "succeeding letters" of the functional identification letters and is separated from them by a hyphen.

7A.1.2.2 Instruments Common to Multiple Process Systems

If an instrument is common to two or more process systems, it is assigned to the one for which it is performing its principal function. If no principal function can be determined, it is assigned to the process system having the lowest system identification number.

7A.1.3 Loop Identification

The control loop identification of an instrument generally uses a number assigned to the control loop of which the instrument is a part. There may be one or many instrument control loops in a process system. However, each control loop has a unique number. The control loop numbering sequence begins with 1, starting generally at the first measurement or control point of each process system.

7A.1.3.1 Instruments Common to Multiple Control Loops

If an instrument is common to two or more control loops, it is assigned to the loop for which it is performing its principal function. If no principal function can be determined, it is assigned to the loop having the lowest loop identification number.

7A.1.3.2 Multiple Instruments with a Common Function

If a given loop has more than one instrument with the same functional identification, a suffix letter or number is appended to the loop number, e.g., FCV-3-10A, FCV-3-10B.

7A.2 SYMBOLS

The symbols used to depict the instrumentation on flow, control, and logic diagrams and other drawings are illustrated in the following figures:

Figure 7A-3 - Flow and control diagram symbols

Figure 7A-4 - Basic instrumentation and radiation symbols

Figure 7A-5 - Application of basic instrumentation symbols

Figure 7A-6 - Digital logic symbols

The flow diagram symbols for valves, valve operators, and miscellaneous devices most frequently used by TVA are shown in Figure 7A-3.

7A.2.1 Instrument Symbol

The circular symbol, shown in Figure 7A-4, is the basic instrumentation symbol. It is used to depict the instrument proper and most other instrumentation items. Also, it is used as a "flag" to enclose identifications and point out items such as valves, which have their own pictorial symbols. Typical applications of the instrumentation symbols are shown in Figure 7A-5.

INSTRUMENT FUNCTION / MEASURED VARIABLE		CONTROLLING							MEASURING										SWITCH			ALARM				SPECIAL	
		RECORDING	INDICATING	NONINDICATING	CONTROL VALVE	SOLENOID VALVE	CONTROL OPERATOR		RECORDING	INDICATING	SIGHT GLASS	PRIMARY ELEMENT	TRANSMITTER	TOTALIZER	MODIFIER	ANALYZER	WELL		INDICATING	NONINDICATING		ALARM				POWER SUPPLY	TEST FACILITY
	Symbol	RC	IC	C	CV	SV	CO		R	I	G	E	T	Q	M	A_n	W		IS	S		A				Px	Tx
CARBON DIOXIDE	CO_2								CO_2R	CO_2I		CO_2E	CO_2T		CO_2M	CO_2A_n			CO_2IS	CO_2S		CO_2A					
CONDUCTIVITY	C								CR	CI		CE	CT		CM	CA_n			CIS	CS		CA					
COPPER	Cu								CuR	CuI		CuE	CuT		CuM	CuA_n			CuIS	CuS		CuA					
ELECTRICAL	E	ERC	EIC	EC					ER	EI		EE	ET	EQ	EM				EIS	ES		EA					
FLOW	F	FRC	FIC	FC	FCV	FSV	FCO		FR	FI	FG	FE	FT	FQ	FM				FIS	FS		FA					FTx
HAND (MANUAL)	H			HC	HCV		HCO													HS							
HYDROGEN	H_2								H_2R	H_2I		H_2E	H_2T		H_2M	H_2A_n			H_2IS	H_2S		H_2A					
HYDROGEN ION CONC	pH			pHC					pHR	pHI		pHE	pHT		pHM	pHA_n			pHIS	pHS		pHA					
INTERVAL (TIME)	I			IC					IR	II			IT		IM				IIS	IS		IA					
IRON	Fe								FeR	FeI		FeE	FeT		FeM	FeA_n			FeIS	FeS		FeA					
LEVEL	L	LRC	LIC	LC	LCV	LSV	LCO		LR	LI	LG	LE	LT		LM				LIS	LS		LA					LTx
MOISTURE	M			MC					MR	MI		ME	MT		MM	MA_n			MIS	MS		MA					
OXYGEN	O_2								O_2R	O_2I		O_2E	O_2T		O_2M	O_2A_n			O_2IS	O_2S		O_2A					
PRESSURE	P	PRC	PIC	PC	PCV	PSV	PCO		PR	PI			PT		PM				PIS	PS		PA					PTx
PRESSURE DIFF	Pd	PdRC	PdIC	PdC	PdCV	PdSV	PdCO		PdR	PdI			PdT		PdM				PdIS	PdS		PdA					
RADIATION	R								RR	RI		RE	RT		RM				RIS	RS		RA					
SILICA	Si								SiR	SiI		SiE	SiT		SiM	SiA_n			SiIS	SiS		SiA					
SPEED	S	SRC	SIC	SC	SCV		SCO		SR	SI		SE	ST		SM				SIS	SS		SA					
SPECIAL	X	XRC	XIC	XC	XCV		XCO		XR	XI		XE	XT		XM		XW		XIS	XS		XA					
TEMPERATURE	T	TRC	TIC	TC	TCV		TCO		TR	TI		TE	TT		TM		TW		TIS	TS		TA					TTx
TURBIDITY	Tu								TuR	TuI		TuE	TuT		TuM				TuIS	TuS		TuA					
VIBRATION	V								VR	VI		VE	VT		VM				VIS	VS		VA					
WEIGHT	W								WR	WI		WE	WT		WM				WIS	WS		WA					
ZONE (POSITION)	Z									ZI			ZT		ZM				ZIS	ZS		ZA					
SODIUM	Na								NaR	NaI		NaE	NaT		NaM	NaAn						NaA					
HYDRAZINE	Hy								HyR	HyI		HyE	HyT		HyM	HyAn						HyA					
SAMPLE	Sa											SaE															

Figure 7A-1 Table I, Instrument Identification, Combination of Letters

CODE	SYSTEM	CODE	SYSTEM	CODE	SYSTEM
0	INDEX, NP STYLES, MIMICS, MISC EQUIP., & LOCAL PANELS	34	VACUUM PRIMING SYSTEM	67	ESSENTIAL RAW COOLING WATER SYSTEM
1	MAIN STEAM SYSTEM	35	GENERATOR COOLING SYSTEMS	68	REACTOR COOLANT SYSTEM
2	CONDENSATE SYSTEM	36	FW SECONDARY TREATMENT SYSTEM	69	
3	MAIN AND AUXILIARY FEEDWATER SYSTEM	37	GLAND SEAL WATER SYSTEM	70	COMPONENT COOLING SYSTEM
4		38	INSULATING OIL SYSTEM	71	
5	EXTRACTION STEAM SYSTEMS	39	CO_2 STORAGE, FIRE PROTECTION & PURGING SYSTEM	72	CONTAINMENT SPRAY SYSTEM
6	HEATER DRAINS & VENTS SYSTEM	40	STATION DRAINAGE SYSTEM	73	
7	TURBINE EXTRACTION TRAPS & DRAINS SYSTEM	41	LAYUP WATER TREATMENT SYSTEM	74	RESIDUAL HEAT REMOVAL SYSTEM
8	MISCELLANEOUS TURBINE CONNECTIONS	42	CHEMICAL CLEANING SYSTEM	75	
9	MISCELLANEOUS TURBINE VENTS SYSTEM	43	SAMPLING & WATER QUALITY SYSTEM	76	
10		44	BUILDING HEATING SYSTEM	77	WASTE DISPOSAL SYSTEM
11		45		78	SPENT FUEL PIT COOLING SYSTEM
12	AUXILIARY BOILER SYSTEM	46	FEEDWATER CONTROL SYSTEM	79	FUEL HANDLING AND STORAGE SYSTEM
13	FIRE DETECTION SYSTEM	47	TURBOGENERATOR CONTROL SYSTEM	80	PRIMARY CONTAINMENT COOLING SYSTEM
14	CONDENSATE DEMINERALIZER SYSTEM	48		81	PRIMARY MAKEUP WATER SYSTEM
15	STEAM GEN. BLOWDOWN SYSTEM	49	BREATHING AIR SYSTEM	82	STANDBY DIESEL GENERATOR SYSTEM
16		50	HYPERCHLORITE SYSTEM	83	HYDROGEN RECOMBINATION SYSTEMS
17		51		84	FLOOD MODE BORATION MAKEUP SYSTEM
18	FUEL OIL SYSTEM	52	SYSTEM TEST FACILITY (INSTRUMENTATION)	85	CONTROL ROD DRIVE SYSTEM
19		53		86	
20	CENTRAL LUBRICATING OIL SYSTEM	54	INJECTION WATER SYSTEM	87	UPPER HEAD INJECTION SYSTEM
21		55	ANNUNCIATOR & SEQUENTIAL EVENTS RECORDING SYSTEM	88	CONTAINMENT ISOLATION SYSTEM
22		56	TEMPERATURE MONITORING SYSTEM	89	
23		57	ASSOCIATED ELECTRICAL SYSTEMS	90	RADIATION MONITORING SYSTEM
24	RAW COOLING WATER SYSTEM	58	GENERATOR BUS COOLING SYSTEM	91	
25	RAW SERVICE WATER SYSTEM	59	DEMINERALIZED WATER & CASK DECON SYSTEM	92	NEUTRON MONITORING SYSTEM
26	HIGH-PRESSURE FIRE-PROTECTION SYSTEM	60		93	
27	CONDENSER CIRCULATING WATER SYSTEM	61	ICE CONDENSER SYSTEM	94	IN-CORE FLUX/THERMOCOUPLES & SUBCOOLED MARGIN MONITOR SYSTEM
28	WATER-TREATMENT SYSTEM	62	CHEMICAL & VOLUME CONTROL SYSTEM	95	
29	POTABLE (TREATED) WATER DISTRIBUTION SYSTEM	63	SAFETY INJECTION SYSTEM	96	
30	VENTILATING SYSTEM	64		97	
31	AIR CONDITIONING (COOLING-HEATING) SYSTEM	65	EMERGENCY GAS TREATMENT SYSTEM	98	DISTRIBUTED CONTROL SYSTEM
31a	CONTROL BUILDING AIR CONDITIONING (COOLING-HEATING) SYSTEM	66		99	REACTOR PROTECTION SYSTEM
31C	AUXILIARY BUILDING AIR CONDITIONING (COOLING-HEATING) SYSTEM				
32	CONTROL AIR SYSTEM				
33	SERVICE AIR SYSTEM				

TABLE II FOR SEQUOYAH NUCLEAR PLANT UNITS 1 AND 2. NOTE 1. Refer to section 4.2 for explanatory notes for Table II.

SEQUOYAH NUCLEAR PLANT
FINAL SAFETY
ANALYSIS REPORT

FIGURE 7A-2
TABLE II, MECHANICAL SYSTEM
IDENTIFICATION NUMBERS
(REVISED BY AMENDMENT 28)

CAD MAINTAINED DRAWING

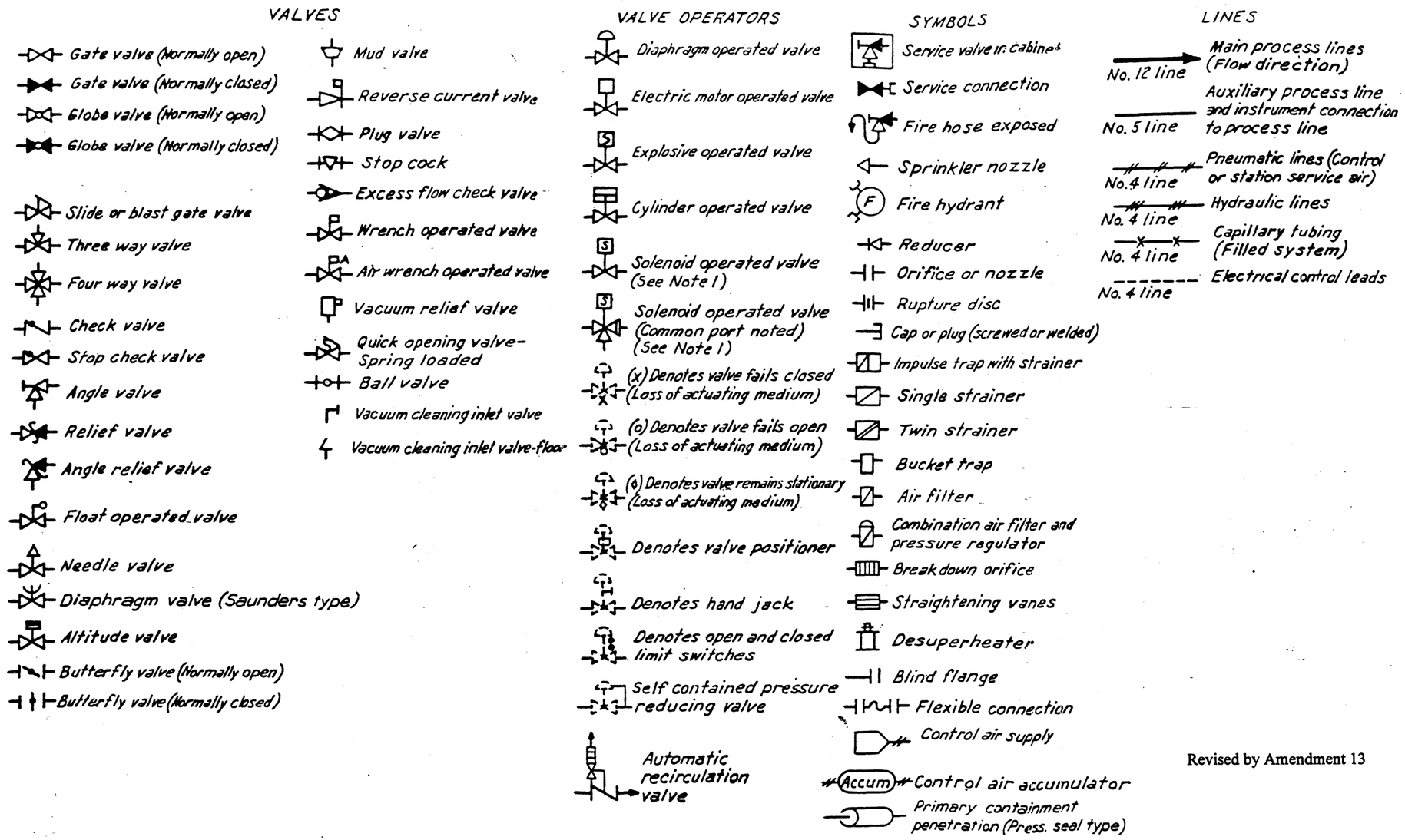

Revised by Amendment 13

Figure 7A-3 Mechanical Flow and Control Diagram Symbols

INSTRUMENTATION SYMBOLS

DENOTES ALL LOCALLY MOUNTED DEVICES

DENOTES IN-LINE MOUNTED DEVICES

DENOTES DEVICES MOUNTED ON MAIN CONTROL ROOM OR INSTRUMENT ROOM PANELS

DENOTES LOCALLY MOUNTED COMBINATION DEVICES

DENOTES COMBINATION DEVICES MOUNTED ON MAIN CONTROL ROOM OR INSTRUMENT ROOM PANELS

RADIATION SYMBOLS

(R) AREA MONITOR WITH LOCAL ALARM

(RI) AREA MONITOR(WITH LOCAL INDICATION & ALARM)

(L) LOCAL MONITOR

(H) HAND AND FOOT MONITOR

(S) SPECIAL MONITOR

(AP) AIR PARTICULATE MONITOR (WITH LOCAL INDICATION & ALARM)

(I) INDICATOR AND ALARM MOUNTED SEPARATE FROM DETECTOR

FIGURE 7A-4 MECHANICAL BASIC INSTRUMENTATION & RADIATION SYMBOLS

Revised by Amendment 13

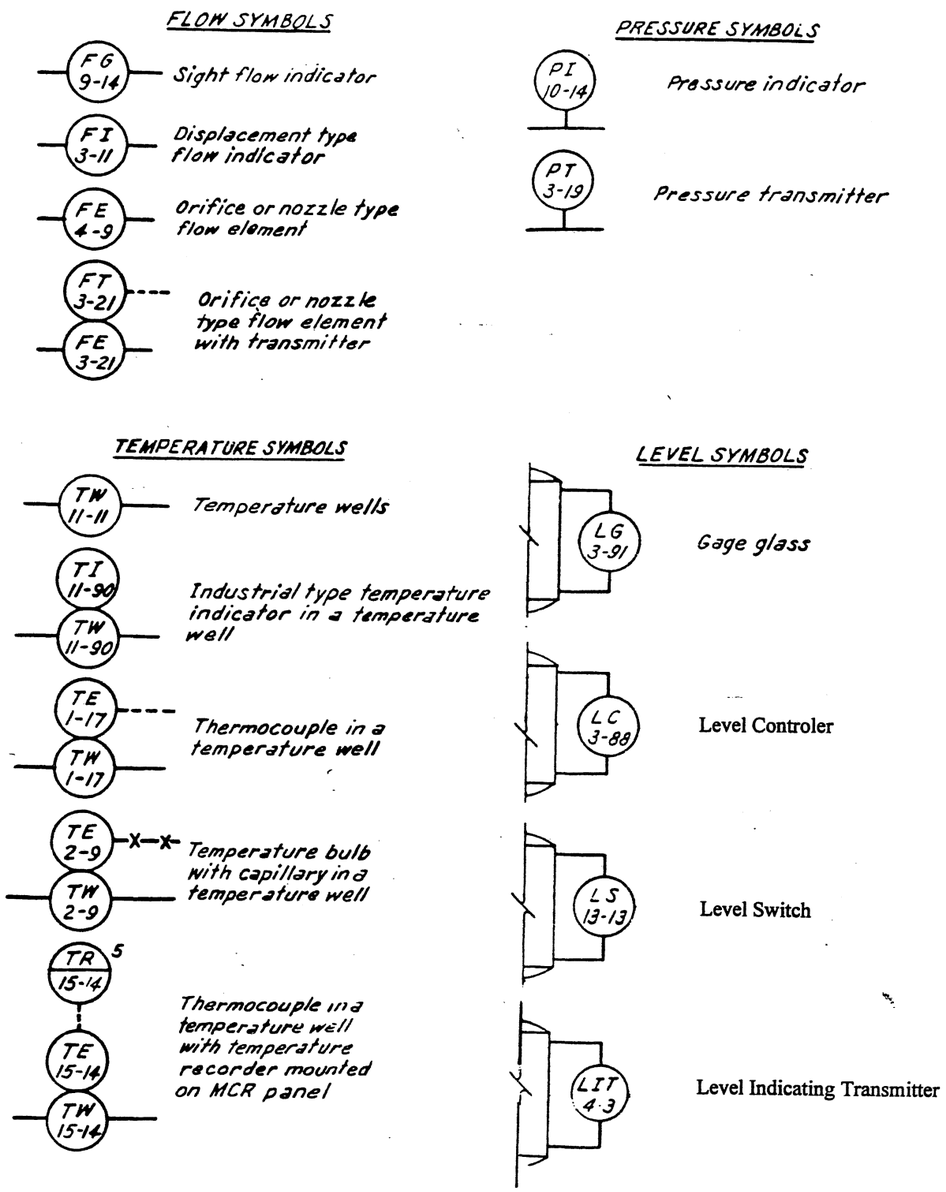

Revised by Amendment 13

Figure 7A-5 Mechanical Application of Basic Instrumentation Symbols

SCOPE

THE LOGIC DIAGRAM WILL BE USED AS REQUIRED TO DEFINE AND DOCUMENT THE PROCESS AND EQUIPMENT CONTROL REQUIREMENTS AND WILL BE USED AS A BASIS FOR COORDINATION OF CONTROL REQUIREMENTS

SIMPLIFIED CONCEPTUAL PROCESS SKETCH WILL BE PRESENTED IN CONJUNCTION . THE LOGIC AND WILL ONLY SHOW THE PIPING AND INSTRUMENTATION DETAILS ESSARY TO DEFINE PROCESS CONTROLS. DETAILED INFORMATION ON PIPING / INSTRUMENTATION MUST BE OBTAINED FROM THE RESPECTIVE PIPING AND/OR ROL DIAGRAM

1. GATE

SYMBOL

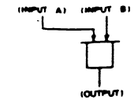

THE "AND" GATE GIVES AN OUTPUT SIGNAL IF ALL INPUTS ARE PRESENT

2 OR GATE

SYMBOL

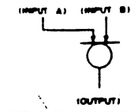

THE "OR" GATE GIVES AN OUTPUT SIGNAL IF ANY INPUT IS PRESENT

MEMORY

SYMBOL

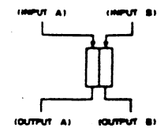

THE MEMORY GIVES A MAINTAINED OUTPUT SIGNAL WHEN INITIATED WITH A MOMENTARY INPUT SIGNAL. IN THE SYMBOL ABOVE, OUTPUTS A AND B CANNOT EXIST SIMULTANEOUSLY THERE WILL ALWAYS BE AN OUTPUT AT EITHER A OR B DEPENDING ON WHICH INPUT WAS THE LAST TO BE INITIATED

4 NOT GATE

SYMBOL

THE "NOT" GATE GIVES AN OUTPUT SIGNAL ONLY IF THERE IS NO INPUT SIGNAL

5. TIMING FUNCTIONS:

(A) SYMBOL

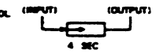

THE ABOVE SYMBOL IS USED WHEN IT IS REQUIRED TO DELAY THE OUTPUT SIGNAL FOR A SPECIFIED TIME DELAY AFTER THE INPUT IS APPLIED

INPUT & OUTPUT CHARACTERISTICS

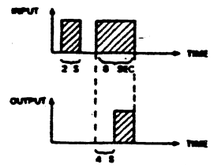

(B) SYMBOL

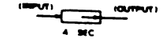

THE ABOVE SYMBOL IS USED WHEN IT IS REQUIRED TO MAINTAIN AN OUTPUT SIGNAL FOR A SPECIFIED TIME DELAY AFTER THE INPUT IS REMOVED. THERE IS NO DELAY AT OUTPUT WHEN THE INPUT IS APPLIED

INPUT - OUTPUT CHARACTERISTICS

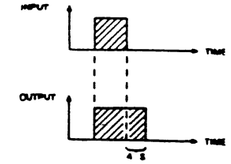

(C) SYMBOL

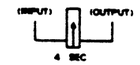

THE ABOVE SYMBOL IS USED WHEN AN OUTPUT OF SPECIFIED DURATION IS REQUIRED REGARDLESS OF DURATION OF INPUT.

INPUT - OUTPUT CHARACTERISTICS:

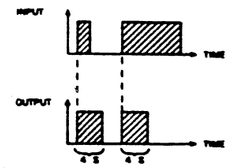

6 INSTRUMENTATION SYMBOLS.

INSTRUMENTATION SYMBOLS USED ON THE LOGIC DIAGRAM WILL BE IDENTICAL TO THOSE ON THE CONTROL DIAGRAM.

7 PROCESS SKETCH SYMBOLS:

(A) HEAT EXCHANGER:

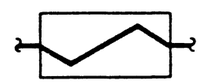

(B) MISCELLANEOUS EQUIPMENT:

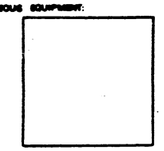

(C) PUMPS:

(1)

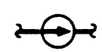

CENTRIFUGAL

(2)

POSITIVE DISPLACEMENT

(D) MOTORS:

(1)

AC MOTOR

(2)

DC MOTOR

(E) OTHER PROCESS SKETCH SYMBOLS

OTHER PROCESS SKETCH SYMBOLS NOT DEFINED ON THIS SHEET WILL BE IDENTICAL TO THOSE USED ON THE CONTROL DIAGRAM

8 MISCELLANEOUS SYMBOLS

(A) ANNUNCIATORS

ANNUNCIATORS ARE IDENTIFIED BY PLACING ANY ONE OR A COMBINATION OF THE LETTERS A, F, AND S IN THE ANNUNCIATOR TRIANGLE.

AN "A" IN THE ANNUNCIATOR TRIANGLE INDICATES A STANDARD UNIT CONTROL ROOM ANNUNCIATION.

AN "F" IN THE ANNUNCIATOR TRIANGLE INDICATES A "FIRST-OUT ANNUNCIATION."

AN "S" IN THE ANNUNCIATOR TRIANGLE INDICATES A "SEQUENCE OF EVENTS PRINTOUT" ANNUNCIATION

(B) THE CONTROL SYSTEM BEING DESCRIBED BY LOGIC MAY BE ELECTRICAL, PNEUMATIC, HYDRAULIC OR MECHANICAL. TO IDENTIFY THESE SYSTEMS, LOGIC SIGNAL LINES ARE MARKED AS FOLLOWS:

THE SIGNAL BEING TRANSMITTED WILL BE IDENTIFIED ON THE SIGNAL LINE WHEN NECESSARY FOR CLARIFICATION.

(C) COINCIDENCE - REDUNDANCY

SYMBOL

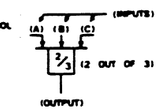

THE COINCIDENT-REDUNDANT GATE PRODUCES AN OUTPUT WHEN THE PRESCRIBED NUMBER OF INPUTS EXIST. IN ABOVE EXAMPLE 2 INPUTS MUST EXIST IN ORDER TO OBTAIN AN OUTPUT.

(D) CONTROL SWITCH OPERATION:

ARROWS WILL BE USED TO DESIGNATE SPRING RETURN FROM ONE SWITCH POSITION TO ANOTHER. NO ARROWS WILL IMPLY MAINTAINED POSITIONS.

EXAMPLE:

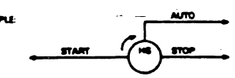

THIS DESIGNATES A SWITCH WITH THREE POSITIONS, START-AUTO-STOP. MAINTAINED IN AUTO & STOP, MOMENTARY IN START WITH SPRING RETURN FROM START TO AUTO.

Figure 7A-6 Mechanical Digital Logic Symbols (and/or), General

Revised by Amendment 13

TABLE OF CONTENTS

Section	Title	Page
8.0	ELECTRIC POWER	8.1.1
8.1	INTRODUCTION	8.1-1
8.1.1	UTILITY GRID AND INTERCONNECTIONS	8.1-1
8.1.2	PLANT ELECTRICAL POWER SYSTEM	8.1-1
8.1.3	SAFETY-RELATED LOADS	8.1-2
8.1.4	DESIGN BASES	8.1-2
8.1.5	DESIGN CRITERIA AND STANDARDS	8.1-3
8.1.5.1	Design Criteria	8.1-4
8.1.5.2	NRC Regulatory Guides	8.1-4
8.1.5.3	Other Standards and Guides	8.1-4
8.2	OFFSITE POWER SYSTEM	8.2-1
8.2.1	TRANSMISSION NETWORK DESCRIPTION	8.2-1
8.2.1.1	Preferred Power System	8.2-2
8.2.1.2	Transmission Lines, Switchyard, and Transformers	8.2-3
8.2.1.3	Arrangement of the Start Buses, Start Board, and Unit Boards	8.2-4
8.2.1.4	Arrangement of Switchyard Control and Relaying Panels	8.2-5
8.2.1.5	Switchyard Control and Relaying	8.2-7
8.2.1.6	6.9-kV Start Board Control and Relaying	8.2-10
8.2.1.7	6.9-kV Unit Board Control and Relaying	8.2-11
8.2.1.8	Conformance with Standards	8.2-12
8.2.2	TRANSMISSION SYSTEM STUDIES (TSS)	8.2-15
8.3	ONSITE POWER SYSTEM	8.3-1
8.3.1	ALTERNATING CURRENT (AC) POWER SYSTEM	8.3-1
8.3.1.1	Description	8.3-1
8.3.1.2	Analysis	8.3-18
8.3.1.3	Conformance with Appropriate Quality Assurance Standards	8.3-26
8.3.1.4	Independence of Redundant AC Power Systems	8.3-26
8.3.1.5	Physical Identification of Safety-Related Equipment in AC Power Systems	8.3-36
8.3.2	DIRECT CURRENT (DC) POWER SYSTEM	8.3-37
8.3.2.1	Description	8.3-37
8.3.2.2	Analysis of Vital 125-Volt DC Control Power Supply System	8.3-43

TABLE OF CONTENTS

Section	Title	Page
8.3.2.3	Conformance with Appropriate Quality Assurance Standards	8.3-46
8.3.2.4	Independence of Redundant DC Power Systems	8.3-46
8.3.2.5	Physical Identification of Safety-Related Equipment in DC Power Systems	8.3-46
8.3.2.6	Sharing of Batteries Between Units	8.3-46
8.3.3	References	8.3-47

LIST OF TABLES

Number	Title
8.1.2-1	Major Safety Loads and Functions
8.2.1-1	Auxiliary Power Supplies and Bus Transfer Schemes
8.3.1-1	Shutdown Board Loads Automatically Stripped Following A Loss of Nuclear Unit and Preferred (Offsite) Power
8.3.1-2	Diesel Generator Major Loads Sequentially Applied Following A Loss of Nuclear Unit and Preferred (Offsite) Power
8.3.1-3	Loads Having Manual Transfer Between Power Trains
8.3.1-4	Safety-Related Standby (Onsite) Power Sources and Distribution Boards
8.3.1-5	Unit 1 Power Train A Board Loading
8.3.1-6	Unit 1 Power Train B Board Loading
8.3.1-7	Unit 2 Power Train A Board Loading
8.3.1-8	Unit 2 Power Train B Board Loading
8.3.1-9	Transformer Loading
8.3.1-10	Table Deleted
8.3.1-11	Major Non-Safety-Related Electrical Equipment that Could Become Submerged Following a LOCA
8.3.2-1	Loss of Major Safety Loads Due to Vital 125V DC Battery Loss Concurrent with Loss of Offsite Power

LIST OF FIGURES

Number	Title
8.1.1-1	SERC TVA Subregion Bulk Power System
8.1.2-1	Key Diagram Station Auxiliary Power System
8.1.2-2	Key Diagram 120V AC & 125V DC Vital Plant Control Power System
8.2.1-1	Wiring Diagrams, Development Single Line
8.2.1-2	Electrical Equipment General Arrangement Plan
8.2.1-3	250 Volt Battery System
8.2.1-4	250 Volt Battery System
8.2.1-5	Arrangement of Lines at Sequoyah Nuclear Plant
8.2.1-6	Equipment-Electrical Control Area Plan - EL. 732.0
8.3.1-1	Wiring Diagram 6900V Diesel Generators Schematic Diagram - Sheet 1
8.3.1-2	Wiring Diagram 6900V Diesel Generators Schematic Diagram - Sheet 2
8.3.1-3	Wiring Diagram 6900V Diesel Generators Schematic Diagram - Sheet 3
8.3.1-4	Wiring Diagram 6900V Diesel Generators Schematic Diagram - Sheet 4
8.3.1-5	Wiring Diagram 6900V Diesel Generators Schematic Diagram - Sheet 5
8.3.1-6	6900V Shutdown Boards
8.3.1-7	Wiring Diagrams 480V Shutdown Board 1A1-A Single Line
8.3.1-8	Wiring Diagrams 480V Shutdown Board 1A2-A Single Line
8.3.1-9	Wiring Diagram 6900V Diesel Generators Single Line
8.3.1-10	Wiring Diagram 6900V Shutdown BD-Typical Blackout Logic
8.3.1-11	Wiring Diagrams 480V Auxiliary Building Common Board Single Line
8.3.1-12	Wiring Diagrams 480V Diesel Auxiliary BD 1A1-A Single Line
8.3.1-13	Wiring Diagrams 480V Diesel Auxiliary BD 1A2-A Single Line

LIST OF FIGURES

Number	Title
8.3.1-14	Wiring Diagrams 480V Diesel Auxiliary Power - Sheet 4
8.3.1-15	Wiring Diagrams 480V Diesel Auxiliary Power - Sheet 1
8.3.1-16	Wiring Diagrams 480V Diesel Auxiliary Power - Sheet 3
8.3.1-17	6900 Volt Containment Penetration Protection
8.3.1-18	480 Volt Containment Penetration Protection
8.3.1-19	120 Volt AC Containment Penetration Protection
8.3.1-20	125 Volt DC Containment Penetration Protection
8.3.1-21	Electrical Penetrations
8.3.1-22	Electrical Penetrations
8.3.2-1	Wiring Diagrams 125V Vital Battery Board I Single Line - Sheet 1

8.0 ELECTRIC POWER

8.1 INTRODUCTION

8.1.1 Utility Grid and Interconnections

The Tennessee Valley Authority (TVA) is a corporation of the United States Government serving the State of Tennessee and parts of six other states in the southeast on the boundaries of Tennessee. TVA is interconnected with electric power companies to the north, west, south, and east of its service area. As shown in Figure 8.1.1-1, the TVA grid consists of interconnected hydro plants, fossil-fueled plants, combustion turbine plants, and nuclear plants supplying electric energy over a transmission system consisting of various voltages up to 500-kV.

The Sequoyah Nuclear Plant is located 18 miles northeast of Chattanooga, Tennessee, on the west bank of the Tennessee River, six miles east of Soddy-Daisy, Tennessee. The plant is connected into a strong transmission grid supplying large load centers. One of the two nuclear units is connected to the 500-kV transmission system and one is connected to the 161-kV transmission system. The two systems are interconnected at Sequoyah through a 1200 MVA, 500-161-kV transformer bank.

8.1.2 Plant Electrical Power System

For Unit 1and 2, the plant electric power system consists of the main generator, the generator circuit Breaker (GCB), the unit station service transformers, the common station service transformers, the main bank transformers, the diesel generators, the batteries, and the electric distribution system as shown in Figures 8.1.2-1 and 8.1.2-2. The main generator supplies electrical power through isolated-phase buses to the main bank transformers and the unit station service transformers. During normal operations the auxiliary power is typically supplied by unit power through the unit station service transformers. During startup and shutdown the auxiliary power is typically supplied by the 500-kV system through the main bank and unit station service transformers for Unit 1 and the 161-kV system through the main bank and unit station service transformers for Unit 2. During startup, shutdown, and normal operations auxiliary power may be supplied by the 161-kV system through the common station service transformers.

The standby onsite power is supplied by four diesel generators. The power to the 6.9-kV common boards is supplied by the 161-kV system through the common station service transformers.

The safety objective for the power system is to furnish adequate electric power to ensure that safety loads function in conformance with design criteria and bases.

The safety objective has been accomplished by: (1) establishing design criteria and bases that conform to regulatory documents and accepted design practice, and (2) implementation of these criteria and bases in a manner that assures a system design and a constructed plant which satisfies safety requirements. The applicable documents governing the design are shown in Subsection 8.1.5.

Figure 8.1.2-1 depicts the plant auxiliary power distribution system that receives AC power from either the Unit 1 or 2 nuclear power unit, the two independent preferred (offsite) power circuits, and four diesel-generator standby (onsite) power sources and distributes it to both safety-related and nonsafety-related loads in the plant. The two preferred circuits have access to the TVA transmission network which in turn has multiple interties with other transmission networks.

The major safety-related loads for each nuclear unit are divided electrically into two redundant load groups. Each redundant load group of each unit has access to a standby (onsite) source and to each of the two preferred (offsite) sources. Due to a number of shared systems, two (must be the same train) out of four diesels and load groups are required to provide all safety functions for each unit. The offsite and onsite power systems are described in Sections 8.2 and 8.3.

Figure 8.1.2-2 depicts the vital AC and DC control power distribution systems that connect four 125V batteries, four battery chargers and eight 120V AC inverters with their respective safety-related loads. The 125V DC distribution system is a safety-related system which receives power from four independent battery chargers and four 125V DC batteries and distributes it to safety-related (and non-safety related) loads of both units. The 120V AC distribution system is also a safety-related system which receives power from eight independent inverters and distributes it to the safety-related (and non-safety related) loads of both units. These systems are described in Sections 8.2 and 8.3.

8.1.3 Safety-Related Loads

Major loads requiring electric power to perform their safety function are listed in Table 8.1.2-1.

8.1.4 Design Bases

The design bases for the electric power system are listed below.

Offsite (Preferred) Power System

(1) Each of the two offsite power circuits supplying electric power from the transmission network to the onsite electric distribution system shall have sufficient capability and capacity, and be available in sufficient time following a loss of all onsite alternating current power and the other offsite electric power circuit, to assure that specified acceptable fuel design limits and design conditions of the reactor coolant pressure boundary are not exceeded. One of the two circuits shall be available to supply the plant safety loads within a few seconds following a loss-of-coolant accident to assure that core cooling, containment integrity, and other vital safety functions are maintained.

(2) The two offsite power circuits (not including the switchyard) shall be designed and located to be physically independent so as to minimize, to the extent practical, the likelihood of their simultaneous failure under operating and postulated accident and environmental conditions.

Onsite (Standby) Power Systems

(1) The onsite power systems shall be designed to provide sufficient capacity to assure that acceptable fuel design limits and design conditions of the reactor coolant pressure boundary are not exceeded as a result of anticipated operational occurrences and that the core is cooled and containment integrity and other vital functions are maintained in the event of postulated accidents in one unit and to safely shutdown the other unit.

(2) The onsite power systems shall be designed to perform their safety functions assuming a single failure.

(3) The onsite power systems shall be located within Category I structures so that they are protected from natural phenomena.

(4) The onsite power systems shall be designed to perform their safety function considering the effects of the following events:

(a) postulated accident environment

(b) fires

(c) accident-generated missiles

(d) fire protection system operation

(e) accident-generated flooding, sprays, or jets

(f) single act, event, component, failure, or circuit fault that could cause multiple equipment malfunctions.

(5) The onsite power systems shall be designed to permit appropriate surveillance, periodic inspection, and testing of important areas and features to assess the continuity of the systems and the condition of their components.

(6) The onsite standby AC power sources shall be designed to be automatically initiated in the event of an accident signal or a loss of offsite power.

Onsite DC Power System

(1) The vital batteries have adequate capacity for a period of 30 minutes, without chargers, to provide the necessary DC power to perform the required safety functions in the event of a postulated accident in one unit and to safely shutdown the other unit, assuming a single failure.

The 30 minute criteria is used to justify battery sizing. This timeframe is an acceptable time to demonstrate the adequacy of the vital battery system by the safety analysis of the station in accordance with IEEE Std 308-1971.

(2) The vital batteries have adequate capacity, with load shedding, for a period of four hours, without chargers, to provide the necessary DC power to maintain both reactors at hot shutdown, assuming the loss of all AC power sources.

(3) The vital battery chargers have adequate capacity to simultaneously supply the combined demands of the steady-state loads and to restore the battery from the design discharge state to the design charged state.

8.1.5 Design Criteria and Standards

Although the design of the electric power system for the Sequoyah Nuclear Plant preceded the publication of several of the standards and regulatory guides referenced below, it is TVA's belief that the design meets the intent of those standards and guides.

8.1.5.1 Design Criteria

(1) IEEE Std 279-1971, IEEE Standard Criteria for Protection Systems for Nuclear Power Generating Stations.

(2) IEEE Std 308-1971, IEEE Standard Criteria for Class IE Electric Systems for Nuclear Power Generating Stations.

(3) Criterion Nos. 1, 2, 3, 4, 5, 17, and 18, NRC General Design Criteria Nuclear Power Plants (10 CFR 50, Appendix A, July 7, 1971).

(4) AEC Quality Assurance Criteria for Nuclear Power Plants (10 CFR 50, Appendix B, June 26, 197l).

8.1.5.2 NRC Regulatory Guides

(1) Regulatory Guide No. 1.6, Rev. 0, Independence Between Redundant Standby (Onsite) Power Sources and Between Their Distribution Systems.

(2) Regulatory Guide No. 1.9, Rev. 0, Selection of Diesel Generator Set Capacity for Standby Power Supplies.

(3) Regulatory Guide No. 1.32, Rev. 2, Use of IEEE Std 308-1971, "Criteria for Class IE Electric Systems for Nuclear Power Generating Stations."

(4) Regulatory Guide 1.29, Rev. 0, Seismic Design Classification.

(5) Regulatory Guide 1.81, Rev. 1, Shared Emergency and Shutdown Electric Systems for Multi-Unit Nuclear Power Plants.

(6) Branch Technical Position EICSB 7, Shared Emergency Electric Power Systems for Multi-Unit Generating Station.

(7) Regulatory Guide 1.106, Rev. 1, "Thermal Overload Protection for Electric Motors on Motor Operated Valves"

(8) Regulatory Guide 1.155, RO, Station Blackout

8.1.5.3 Other Standards and Guides

(1) IEEE No. 317-1971, IEEE Standard for Electric Penetration Assemblies in Containment Structures for Nuclear Fueled Power Generating Stations.

(2) IEEE No. 323-1971, IEEE Trial-Use Standard: General Guide for Qualifying Class IE Electric Equipment for Nuclear Power Generating Stations.

(3) IEEE Std 344-1971, IEEE Trial-Use Guide for Seismic Qualification of Class IE Electric Equipment for Nuclear Power Generating Stations.

(4) IEEE Std 387-1972, IEEE Trial-Use Standard Criteria for Diesel-Generator Units Applied as Standby Power Supplies for Nuclear Power Generating Stations.

(5) IEEE 450-1972, IEEE Recommended Practice for Maintenance, Testing, and Replacement - Large Stationary Type Power Plant and Substation Lead Storage Batteries.

(6) IEEE 336-1971, "Installation, Inspection, and Testing Requirements for Instrumentation and Electrical Equipment During the Construction of Nuclear Generating Stations."

(7) IPCEA P-46-426, Power Cable Ampacities, Vol 1 - Copper Conductors.

(8) ANSI C37.1-1962, Relays Associated with Power Switchgear.

(9) ANSI C37.4-37.12, Alternating-Current Power Circuit Breakers.

(10) ANSI C37.19-1963, Low-Voltage AC Power Circuit Breakers and Switchgear Assemblies.

(11) ANSI C37.20-1969, Switchgear Assemblies and Metal-Enclosed Bus.

(12) ANSI C57, Transformers, Regulators, and Reactors.

(13) NEMA AB-1-1964, Molded-Case Circuit Breakers

(14) NEMA EI-2-1966, Instrument Transformers

(15) NEMA SG3-1965, Low-Voltage Power Circuit Breakers

(16) NEMA SG4-1965, High-Voltage Power Circuit Breakers

(17) NEMA SG5-1967, Power Switchgear Assemblies

(18) NEMA SG6-1960, Power Switching Equipment

(19) NEMA TR1-1971, Transformers, Regulators, and Reactors

(20) NEMA MG1, Motors and Generators

(21) NEMA WC5, Thermoplastic-Insulated Wire and Cable

(22) IPCEA S-61-402, Thermoplastic-Insulated Thermoplastic-Jacketed Cables

(23) IPCEA S-56-434, Polyethylene-Insulated Thermoplastic-Jacketed Cables

(24) IPCEA S-66-524, Interim Standard No. 2, XLPE Insulation

(25) NFPA No. 78-1971, Lightning Protection Code

(26) IPCEA S-19-81, NEMA WC3-1969, IPCEA-NEMA Standards Publication, Rubber-Insulated Wire and Cable. Specific references herein are from the fifth edition dated July 1969.

(27) IPCEA S-28-357, NEMA WC1-1963, American National Standards Institute Requirements for Asbestos, Asbestos-Varnished Cloth, and Asbestos-Thermoplastic Insulated Wires and Cables (C8.36-1962).

(28) IE Circular No. 81-13, Torque Switch Electrical Bypass Circuit for Safeguard Service Valve Motors.

(29) IEEE 535-1988, "IEEE Standard for Qualification of Class 1E Lead Storage Batteries for Nuclear Power Generating Stations"

(30) The Institute of Electrical and Electronic Engineers, Inc., “IEEE Standard for Electric Penetration Assemblies in Containment Structures for Nuclear Fueled Power Generating Stations,” IEEE Standard 317-1976.

(31) The Institute of Electrical and Electronic Engineers, Inc., “IEEE Standard for Electric Penetration Assemblies in Containment Structures for Nuclear Fueled Power Generating Stations,” IEEE Standard 317-1983.

(32) ASME Boiler and Pressure Vessel Code, Section III, Subsection NE, for Class MC Components, 1971 Edition.

(33) ASME Boiler and Pressure Vessel Code, Section III, Subsection NE, for Class MC Components, 1986 Edition.

TABLE 8.1.2-1 (Sheet 1)

MAJOR SAFETY LOADS AND FUNCTIONS

Safety Loads	Typical Safety Function	Power
Centrifugal Charging Pumps	Provide ECCS	6900V AC
Safety Injection Pumps	Provide ECCS	6900V AC
Residual Heat Removal Pumps	Remove reactor heat during a shutdown condition and ECCS	6900V AC
Containment Spray Pumps	Provide containment cooling	6900V AC
Essential Raw Cooling Water Pumps	Provide cooling water for CCS and other safety systems	6900V AC
Auxiliary Feedwater Pumps	Provide secondary side SG inventory	6900V AC
Pressurizer Heater Backup Group	Provide heat for maintaining adequate pressure in the primary coolant system	6900/480V AC
Component Cooling System Pumps	Provide cooling water to the NSSS equipment and safety systems	480V AC
Spent Fuel Pit Pumps	Cooling spent fuel pit pool	480V AC
Fire Pumps	Provide AFW during flood	480V AC
Reactor Lower Compartment Cooling Fans	Provide adequate cooling to the lower containment during post accident periods	480V AC
Containment Air Return Fans	Return air from upper to lower containment to reduce pressure after a LOCA and prevent excessive hydrogen buildup in pocketed areas	480V AC
Safety-Related Air Conditioning	Control air temperature	480V AC
Ventilation System	Controls air temperature and radiological conditions	480V AC & 125V DC
Vital Battery Chargers	Maintain 125V vital batteries at proper charge level	480V AC
Vital Inverter	Supplies power to the vital instrument buses	480V AC or 125V DC
Hydrogen Recombiner	Control hydrogen concentration	480V AC
Motor Control Centers	Provide power for small motors, fans, MOV's, heaters, and small pumps	480V AC
Solid-State Protection System	Shuts reactor down whenever an unsafe parameter is sensed.	120V AC

TABLE 8.1.2-1 (Sheet 2)

MAJOR SAFETY LOADS AND FUNCTIONS

Safety Loads	Typical Safety Function	Power
Nuclear Instrument System	Monitors reactor power level for reactor control and trip logic	120V AC
Auxiliary Relay Racks	Auxiliary relays for process control	120V AC & 125V DC
Power Switchgear	Control power for power switchgear	125V DC
Reactor Trip Switchgear	Trips reactor	125V DC
Diesel Generator Control	Remote control of diesel generators	125V DC
Auxiliary Feed Turbine	Control power of auxiliary feed pump turbine	125V DC
Solenoid Valves	Controls flow through safety related valves (may use pneumatic valves with solenoid pilots)	125V DC & 120V AC

Security-Related Information - Figure 8.1.1-1 Withhold Under 10 CFR 2.390

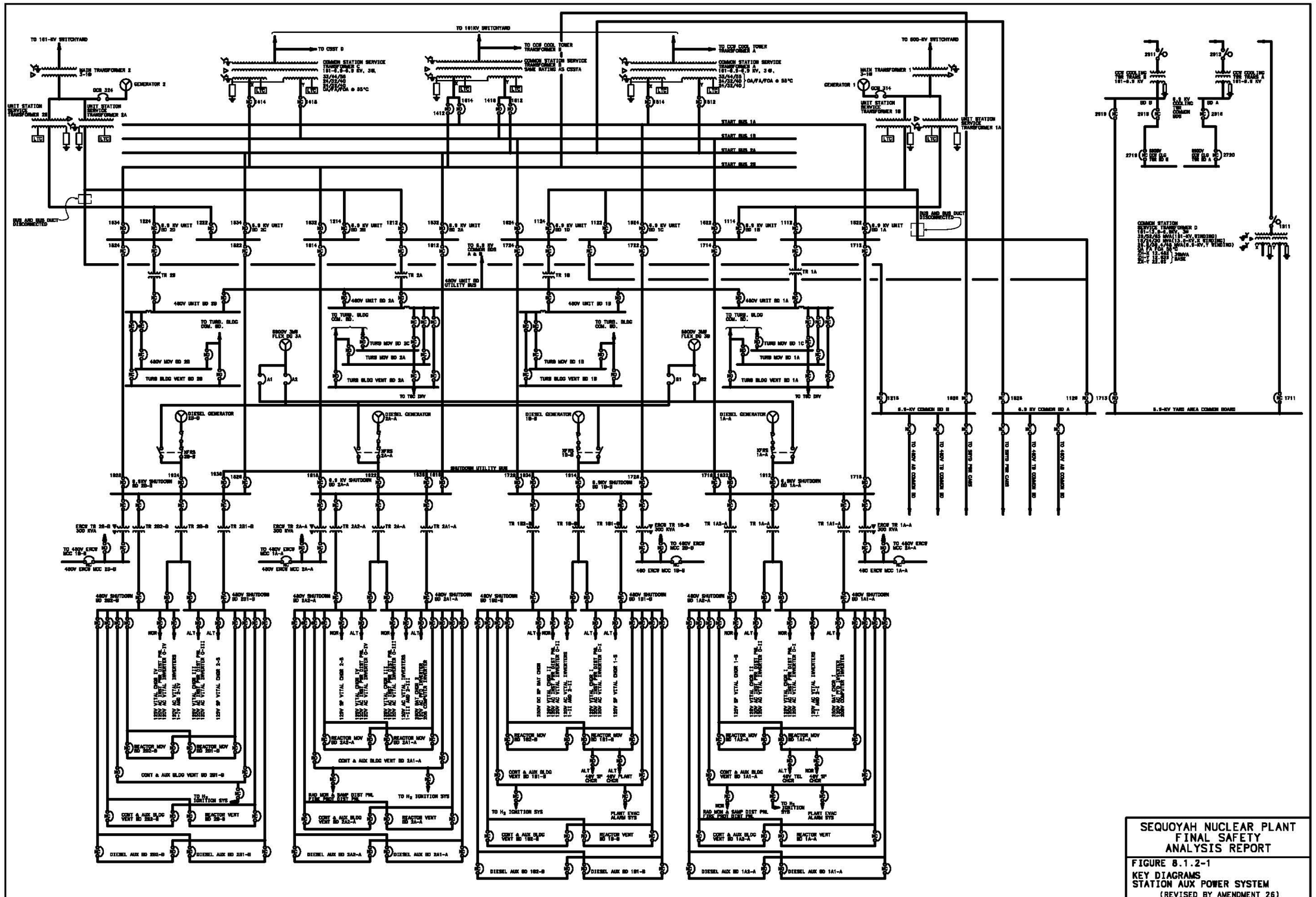

SEQUOYAH NUCLEAR PLANT
FINAL SAFETY
ANALYSIS REPORT

FIGURE 8.1.2-1

KEY DIAGRAMS
STATION AUX POWER SYSTEM
(REVISED BY AMENDMENT 26)

CAD MAINTAINED DRAWING

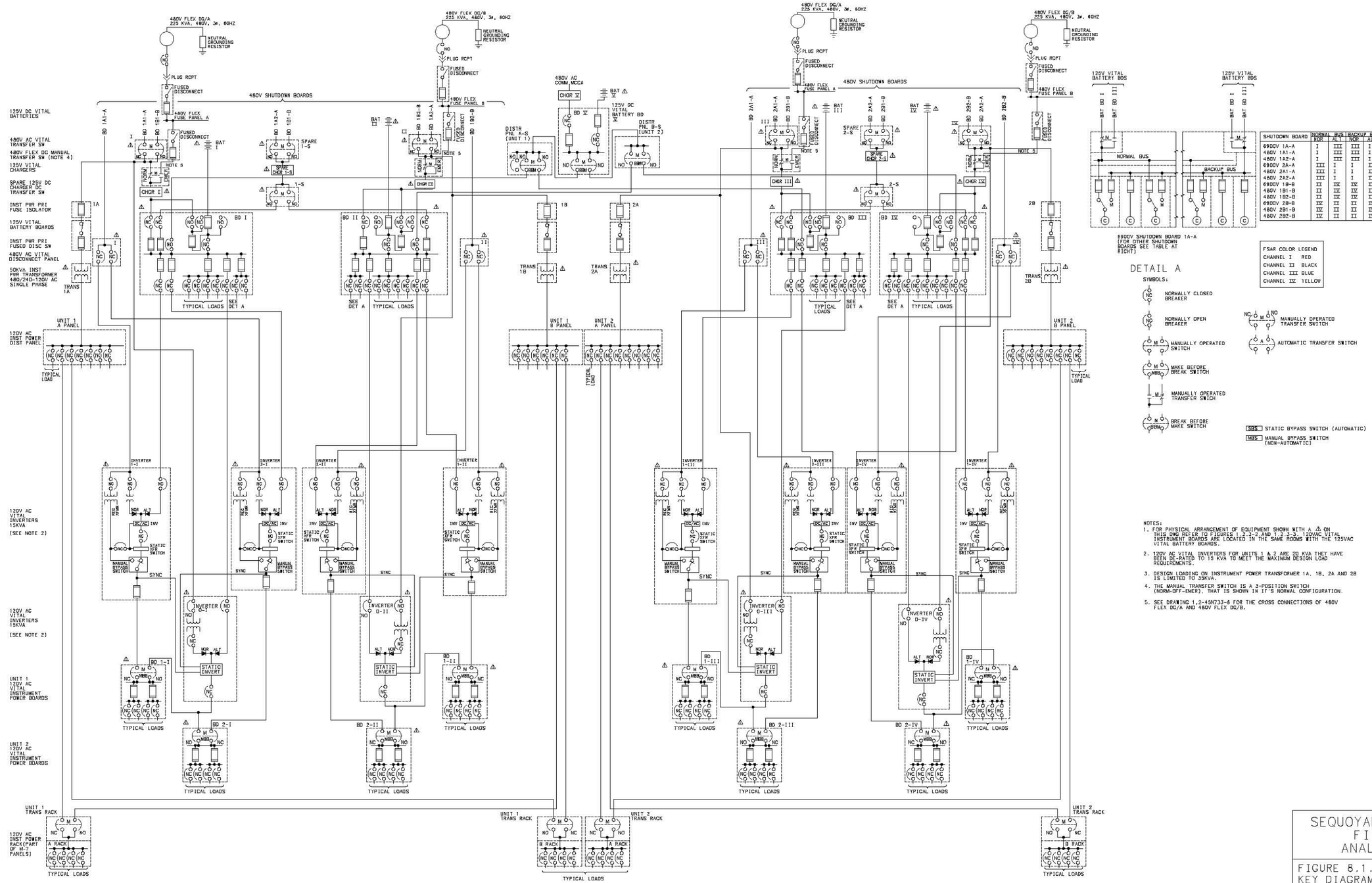

SHUTDOWN BOARD	NORMAL BUS NOR	NORMAL BUS ALT	BACKUP BUS NOR	BACKUP BUS ALT
690DV 1A-A	I	III	III	I
480V 1A1-A	I	III	III	I
480V 1A2-A	I	III	III	I
690DV 2A-A	III	I	I	III
480V 2A1-A	III	I	I	III
480V 2A2-A	III	I	I	III
690DV 1B-B	II	IV	IV	II
480V 1B1-B	II	IV	IV	II
480V 1B2-B	II	IV	IV	II
690DV 2B-B	IV	II	II	IV
480V 2B1-B	IV	II	II	IV
480V 2B2-B	IV	II	II	IV

690DV SHUTDOWN BOARD 1A-A (FOR OTHER SHUTDOWN BOARDS SEE TABLE AT RIGHT)

SEQUOYAH NUCLEAR PLANT
FINAL SAFETY
ANALYSIS REPORT

FIGURE 8.1.2-2
KEY DIAGRAMS 120V AC &, 125V DC
PLANT CONTROL POWER SYSTEM
(REVISED BY AMENDMENT 26)

CAD MAINTAINED DRAWING

8.2 OFFSITE POWER SYSTEM

8.2.1 Transmission Network Description

The Sequoyah Nuclear Plant is connected into a strong existing transmission network supplying large load centers. One unit is connected into the 500-kV transmission network and the other unit is connected into the 161-kV transmission system. The two systems are interconnected at Sequoyah through a 1200-MVA, 500-161-kV intertie transformer bank. Preferred electric power to the emergency buses and to start up and shut down the generating units at the Sequoyah Nuclear Plant is supplied by two physically and electrically independent circuits from the Sequoyah 161-kV or 500-kV switchyard through separate transformers to the onsite electrical distribution system, (refer to Figure 8.2.1-1).

For Unit 1 and 2, the normal power supply to the emergency buses is typically supplied by unit power through the unit station service transformers (USSTs). For Unit 1, the normal power supply to start up and shut down the generator is typically supplied by the 500-kV system through the main bank transformers and USSTs. For Unit 2, the normal power supply to start up and shut down the generator is typically supplied by the 161-kV system through the main bank transformers and unit station service transformers. Power to the emergency buses and to start up or shut down the generating unit may be supplied by the common station service transformers (CSSTRs).

Five 500-kV transmission lines connect one generating unit into the 500-kV system. Except in the vicinity of Sequoyah Nuclear Plant, the lines are on rights of way which are sufficiently wide to preclude the likelihood of failure of one line causing failure of another.

The 161-kV switchyard is the terminus for the second nuclear unit, the 500-kV intertie transformer bank and eight 161-kV transmission lines. Four 161-kV transmission lines terminate on each bus section. Two fuseless 84 MVAR 161-kV capacitor banks are tied to the 161-kV switchyard through double bus-tie breakers. Each bank is independently switched. These capacitors provide reactive voltage support for the 161-kV offsite system. Of the eight 161-kV transmission lines emanating from the Sequoyah 161-kV switchyard, one connects to TVA's Chickamauga Hydro Plant; one connects to TVA's Watts Bar Hydro Plant; and six connect to 161-kV substations that are an integral part of the 161-kV transmission network. Nine hydro plants, one fossil-fueled plant, and one nuclear plant are located within a sixty-mile radius from the Sequoyah Nuclear Plant. These plants are strongly connected through the 161-kV and 500-kV transmission networks to Sequoyah and have an installed capacity of more than 4000 MVA.

The transmission line structures of the 161-kV and 500-kV systems are designed to withstand medium loading conditions as specified in The Bureau of Standards Handbook No. 10 (National Electrical Safety Code Part 2).

To reduce the total number of acres of easement right of way required for the line connections to the Sequoyah Nuclear Plant, a number of the 161-kV lines are constructed on double circuit towers and, also, on common wide right of way. The 161-kV switchyard is designed with two main bus sections and is arranged so that the supply to the onsite power system, as well as the connections to the generator and 500-161-kV intertie transformer bank is maintained to one bus section for a failure of the other section. Four of the 161-kV lines terminate on one bus section and connect to Hiwassee, East Cleveland, VW Chattanooga, and Falling Water 161-kV substations. The other four 161-kV transmission lines terminate on the other bus section and connect to Hiwassee and Concord 161-kV substations and Chickamauga and Watts Bar Hydro Plants.

To make the thirteen line connections into Sequoyah, a number of lines must cross each other. When lines of different voltages cross, the higher voltage line crosses over the lower voltage line. Crossings similar to these are common throughout the TVA service area.

The Bradley 500-kV Line crosses over the Sequoyah-Moccasin 161-kV Transmission Line. Assuming the 500-kV line falls at the crossover point, this will result in the loss of both the 500-kV and 161-kV lines. The four remaining 500-kV connections at Sequoyah and the seven remaining 161-kV connections will stay in service.

The Sequoyah-Hiwassee 500-kV Transmission Line crosses under the Widows Creek 500-kV Line, the Franklin 500-kV Line, and the Watts Bar No. 1 Line. If one of the three physically higher lines fall, this will result in the loss of two 500-kV lines. Three 500-kV connections and eight 161-kV connections will stay in service.

The 161-kV transmission line crossover at Sequoyah in the 161-kV transmission grid system consists of the Concord No. 1 line crossing under the following five connections from Sequoyah. They are Hiwassee 2, Hiwassee 1, Chickamauga No. 1, Watts Bar Hydro, and East Cleveland. Only two of the 161-kV transmission lines would be involved if either of the five aforementioned lines were to fall. Those lines remaining in service will be five 500-kV connections and six 161-kV connections.

The Tennessee Valley Region is located in a high thunderstorm frequency area and interruptions due to lightning do occur. Most interruptions are momentary in duration and have no significant effect on the operation of TVA's network of lines. The lightning performance for the transmission lines connected to the 161- and 500-kV switchyards at Sequoyah indicates that for the period January 1, 1994, through December 31, 1998, there were twenty-one 500-kV line interruptions and twenty 161-kV line interruptions attributed to lightning. Of these interruptions, six 500 kV and no 161-kV interruptions resulted in outages in excess of one minute.

Localized heavy conductor icing has occurred on some of TVA's transmission lines in years past. TVA's lines are designed to withstand these heavy icing conditions and no mechanical failures have occurred due to icing of any of the lines being connected into Sequoyah.

Several of the existing transmission lines that will be connected into Sequoyah do traverse fairly rugged terrain. Construction across this type terrain is not unusual for TVA transmission lines. Conductor spans in excess of 2,000 feet are fairly common and construction of spans of this magnitude are handled routinely. The longest spans which normally require the tallest transmission towers are river crossing spans. The 3,400 foot river crossing span on the Watts Bar-Sequoyah 500-kV lines is the longest span in the lines being connected into Sequoyah. The overhead ground wire in this span is marked with aircraft hazard markers and the transmission line towers are lighted for aeronautical protection.

TVA's transmission lines are designed and constructed to eliminate damaging conductor vibrations. Conductor galloping is a phenomenon which normally occurs on lines constructed of small conductors during conductor icing conditions in conjunction with a continuous low velocity wind. Since TVA's higher voltage lines utilize larger conductors, galloping on them is extremely rare and is no threat to the safe operation of the lines being connected into Sequoyah.

8.2.1.1 Preferred Power System

The intent of GDC 17 has been implemented in the design of the Preferred Power System by providing two physically and functionally independent circuits for energizing safety related load groups. This section identifies these two circuits and describes the general provisions made to achieve functional independence between them. Paragraphs 8.2.1.2 through 8.2.1.4 describe measures taken to provide physical independence between them. The Preferred Power System

can be identified by reference to Figures 8.1.2-1, 8.2.1-1, and 8.2.1-2. The Preferred Power System consists of: two main bank transformers; six 24-kV isolated phase buses; four 24-6.9-kV unit station service transformers; four 6.9-kV unit station service transformer buses; three 161-6.9-kV CSSTR's (A and C, energized spare B); a 6.9-kv start board; four 6.9-kV start buses; eight 6.9-kV unit boards; four 6.9-kV shutdown boards; and all overhead conductors, buses, cable, and distribution equipment that interconnect the off-site power circuits with the 6.9-kV shutdown boards. The Preferred Power System is supplied power by way of either the plant 161-kV or 500-kV switchyard. The combination of Unit 1 and 2 main bank transformers, USSTs, 24-kV isolated phase buses, and 6.9-kV unit station service transformer buses comprise one qualified independent off-site power circuit.

Figures 8.1.2-1 and 8.2.1-1 indicate the functional arrangement of the two independent circuits which derive power from either the 161-kV or 500-kV switchyard and deliver it to the individual 6.9-kV Unit Boards. Power is then routed by two independent circuits from the 6.9-kV Unit Boards to the 6.9-kV Shutdown Boards within each unit.

The components comprising the Preferred Power System have been arranged to provide sufficient independence (both physical and functional) to minimize the likelihood of simultaneous outage of both preferred circuits.

Functional independence has been achieved by providing separate control circuits, powered by separate DC sources. The single line diagrams of these non-safety related 250V DC Systems are included as Figures 8.2.1-3 and 8.2.1-4.

8.2.1.2 Transmission Lines, Switchyard, and Transformers

The eight 161-kV and the five 500-kV lines connecting the plant with the TVA transmission network are indicated functionally on Figure 8.2.1-1. The onsite transmission line arrangement is shown on Figure 8.2.1-2 and the offsite transmission line routing in the vicinity of the switchyard is shown on Figure 8.2.1-5. These lines are routed to minimize the likelihood of their simultaneous failure.

The physical separation of the most widely spaced transmission lines at a point on a circle with a radius of one mile from the plant center exceeds 1/4 mile as shown on Figure 8.2.1-5, which meets the separation requirement from Regulatory Guide 1.155 (NU-MARC 87-00).

Physical arrangement of the equipment is shown on Figure 8.2.1-2. Normally, total functional independence is not maintained in the switchyard itself, due to the fact that all bus sections are electrically connected together. However, in the event of an electrical fault, electrical separation is established in a few cycles by circuit breaker operation. The fault isolation and bus transfer scheme is designed to permit automatic fault isolation while still maintaining multiple connections from the 161-kV and 500-kV switchyard to the grid. Thus, both independent circuits providing preferred power will remain energized. Switchyard control and functional independence is further discussed in Paragraph 8.2.1.5.

It is also possible to isolate the incoming circuit associated with a CSSTR from the other incoming transmission lines. This makes it possible to functionally isolate the transformer on a single hydro unit either at the Watts Bar or Chickamauga Hydro Station, which itself has been isolated from the grid.

Location of the CSSTRs and CCW cooling tower transformers is shown on Figure 8.2.1-2. Physical separation between CSSTRs A, B, and C is a minimum of 65 feet, centerline-to-centerline and 35 feet between closest parts. No missile barrier is required between the CSSTRs to protect one transformer in the event of a failure of the other transformer. The physical arrangement is based on TVA's experience and the analysis of previous failures on transformers with similar construction. A fire is the major concern relative to a transformer failure. In addition to the physical separation, automatic fire protection has been provided as

described in the Fire Protection Report (see 9.5.1). Also, the yard area is covered with a thick layer of loose limestone gravel which is designed to limit the spread of transformer oil should a transformer tank rupture. Therefore, these three design features provide the necessary protection to minimize to the extent practical the likelihood of the simultaneous failure of the common station service transformers under operating and postulated accident conditions. The primary voltage is 161-kV, rated 33/44/55MVA, OA/FA/FOA at 55°C.[1] The secondary voltage is 6.9-kV, and each is rated 24/32/40MVA, OA/FA/FOA at 55°C. CSSTR's A, B, and C are equipped with automatic high speed load tap changers.

[1]Cooling modes associated with different ratings are as follows:
OA - Oil to air cooling
FA - Oil to forced air cooling
FOA - Forced oil to forced air cooling

Common station service transformer D and CCW cooling tower transformers A and B are also connected to the 161-kV switchyard. These transformers supply power to non-essential non-safety-related balance-of-plant loads that provide no safety-related functions. The rest of this chapter discusses only the A, B, and C CSSTR's unless specifically noted otherwise.

The location of the unit station service transformers is shown on Figure 8.2.1-2. The USSTs and the CSSTRs are located outside the west and south wall of the turbine building, respectively. Distance mitigates the effect of fire and missiles resulting from the failure of the USSTs on the availability of the CSSTRs. In addition, the yard area below the USSTs is covered with a thick layer of loose limestone gravel which is designed to limit the spread of transformer oil should a transformer tank rupture. Therefore, the design features provide the necessary protection to minimize to the extent practical the likelihood of the simultaneous failure of the unit station service transformers and common station service transformers under operating and postulated accident conditions. The primary voltage of the USSTs is 22-kV. The secondary voltage is 6.9-kV, and each is rated 24/32/40MVA, ONAN/ONAF/ONAF at 55ºC[2]. The USSTs are equipped with automatic high speed load tap changers.

[2]Cooling modes associated with the different ratings are as follows:
ONAN - Oil to air cooling
ONAF - Oil to forced air cooling

8.2.1.3 Arrangement of the Start Buses, Start Board, and Unit Boards

From the low-voltage side of each common station service transformer, two 6.9-kV buses supply the 6.9-kV start board. The 6.9-kV buses from CSSTR C are underground cable. The 6.9-kV buses from CSSTRs A and B maintain 65 feet center-to-centerline separation to their convergence at the start board. These buses then connect to the start bus normal or alternate breakers. The design of the start board conforms to ANSI C 37.20 "Standard for Switchgear Assemblies Including Metal-Enclosed Bus," (including Section 20-6.2.2 of this standard which defines the requirements for barriers) and is classified as outdoor metal-clad switchgear. The breakers at the 6.9-kV start board are electrically operated, horizontal drawout type, with stored energy mechanisms. The breakers supply the start buses which feeds the 6.9-kV unit boards and 6.9-kV common boards. These circuit breakers have a continuous rating of 3,750 amperes, an insulation system for 13.8-kV, and interrupting rating of 50,000 amperes, and a momentary rating of 80,000 amperes. The circuit breakers are utilized at 6.9-kV and there is sufficient margin between the application and the rating of these circuit breakers.

Each start bus is enclosed by a grounded bus housing. The start buses consist of two insulated 6 x 1/2 inch aluminum channels per phase for 4000A busduct section; two insulated 4 x 3/4 inch aluminum bars per phase for 3000A busduct sections; two insulated 4 inch by 3/4 inch aluminum bars per phase for the 2000A busduct section, and one insulated 4 inch by 1/4 inch copper bar per phase for the 1200A busduct section; and two 8 inch by 1/2 inch aluminum bars per phase for part of 4000A buses 1A, 1B, and 2B. The outdoor portion of 1A, 2A, 1B, and 2B are one insulated 10 x 1/2 inch copper bar per phase. 4000A buses C1 and C2 (from CSSTR C to the start board) consist of 9-750MCM per phase underground cables. The bus segment between the start bus and CSSTRs A and B are one insulated 10 x ½ inch copper bar per phase. Each three-phase circuit is separately enclosed in a metal bus housing. The separation with two intervening grounded metal barriers, makes the start buses independent with respect to fault propagation. Protection from natural phenomena, other than GDC 2 events, vehicle collision, missile impact, and falling structures is best provided by minimizing the length of run and careful routing. The position of the bus relative to the turbine building wall, as shown in Figure 8.2.1-2, provides protection for almost 180 degrees from all such non-GDC 2 hazards. The turbine building structure is designed to withstand tornado wind loadings which are greater than that of the offsite power system.

There is no normal vehicular access (except for maintenance) to the vicinity of the start buses. The short length of the buses provides a minimum cross-section for missile impact, while the inherent strength of the bus housing, and supporting structure assures a high probability of surviving a non-GDC 2 missile impact in the unlikely event that it would occur.

The 6.9-kV start buses enter the turbine building spaced approximately 10 feet centerline-to-centerline and continue on this spacing across the building.

The 6.9-kV unit boards are indoor, metal-clad switchgear with electrically operated, horizontal drawout breakers with stored energy mechanisms and are mounted on floor El. 701'-2" between the two start buses. The 6.9-kV common boards are the same type switchgear as the 6.9-kV unit boards and are mounted on floor El. 732'-0" above the two start buses. The start buses are tapped at appropriate places to enter the unit boards supply breakers through the tops of the boards and the common boards supply breakers through the bottoms of the boards. The normal and alternate supply breakers for each board are separated along the length of the board by several load feeder breakers.

The unit station service transformers are located in the transformer yard, west of the turbine building and directly under the delta section of the isolated-phase main generator bus. The unit station service buses are of outdoor construction until they enter the turbine building where the construction changes to indoor type. After entering the turbine building, the unit station service buses are routed to the appropriate supply breakers in the 6.9-kV unit boards and 6.9-kV common boards, entering through the tops of the 6.9-kV unit boards and the bottoms of the 6.9-kV common boards. The unit station service buses routed to the 6.9-kV common boards have a section removed.

All of the station service buses (unit and common) are nonventilated, nonsegregated, metal-clad dripproof construction referenced in ANSI C37.20. In addition, the outdoor portions are weatherproof and equipped with 120V 1-phase heaters to prevent condensation inside the bus conductor insulation or supporting insulators. All buses are provided with gas-resistant seals at entry to a piece of switchgear. At the penetration of an outside building wall, the buses are provided with a 2 hour rated firestop.

It is the TVA position that the offsite power system is not required to withstand the design basis phenomena of GDC 2. An onsite electrical power system is provided, consistent with the requirement of GDC 17, for this purpose.

8.2.1.4 Arrangement of Switchyard Control and Relaying Panels

Figure 8.2.1-6 shows the physical arrangement of the relay and main control rooms where the relay, control, and 250V dc control power distribution panels are located.

The protective and auxiliary relays for CSSTR's A, B, and C are parts of two separate groups of duplex relay boards located in the relay room. The switchboard wire used for wiring in the relay and control boards is insulated with cross-linked polyethylene.

The control switches, indicating lights, and indicating instruments associated with the two CSSTR supplied offsite power circuits are located on panels 5, 4, and 2 of the electrical control board (ECB) in the main control room. Circuit A controls are on ECB panel 5, circuit C on ECB panel 4, and circuit B on ECB panel 2. The control board panels are of unitary construction with full side panels and rear doors.

For Unit 1 and 2, the control switches and indicating instruments associated with the USST supplied power circuit are located on panel 1M1 and 2M1 of the unit control board in the main control room.

The control switches for the 161-kV power circuit breakers and motor-operated disconnect switches are mounted together with the corresponding indicating lights on the benchboard part of each panel. The control switches for the 6900V start bus feeders and associated indicating meters are located above the switches on the vertical part of the board.

Non-safety related control power for power circuit breakers and associated protective relays is provided from the 250V DC power systems as shown in Figures 8.2.1-3 and 8.2.1-4 via circuit breakers on panels 6, 7, and 8 of the control room DC distribution board. Physical isolation of control power supplies for control of the two preferred power circuits is achieved by metal barriers between adjacent panels.

Two separate 250V DC buses are provided in these three panels, bus 1 in panels 7 and 8 and bus 2 in panel 6. Each bus can be fed from one of the two 250V battery boards through manual, mechanically interlocked, nonautomatic circuit interrupters. Normally, bus 1 is fed from battery board 1 and bus 2 from battery board 2. The power circuit breaker and associated relay control circuits are allocated to these two DC buses on the basis of switchyard connections. Thus, circuits related to the 161-kV buses 1 and 2, section 2, are fed from the DC bus 2, and those related to 161-kV buses 1 and 2, sections 3 and 4 (with the exception of power circuit breaker No. 924) are connected to DC bus 1. This allocation of control circuits ensures that the control and relay circuits of the three CSSTR's are fed from two independent DC distribution buses and that failure of one DC bus cannot cause the loss of all CSSTR's (A, B, and C). Each circuit is protected by a circuit breaker and supervised by an amber indicating light located on recording and instrument board panel No. 5. These indicating lights are grouped on the panel on the basis of the DC buses they are connected to, and their wiring is physically separated on the panel on the same basis.

A 480V AC distribution system provides the power required for the 161-kV motor-operated disconnect switches (MODs) and air compressors associated with each airblast 161-kV power circuit breaker. ABB 161-kV SF6 breakers have spring charging motors instead of air compressors. These motors are normally powered from the 480V AC distribution system. On loss of the 480V AC normal supply the SF6 breakers automatically transfer to a 250V DC alternate supply. Two separate 6900V feeders from the 6.9-kV common boards supply four 6900V-480V transformers. The 480V distribution systems are ungrounded and provided with a ground indicating light. Each of the four distribution cabinets, located in the 161-kV switchyard, can be supplied from either of two transformers via a normal or an alternate feeder. The selection, at each cabinet, between the two feeders is by means of manually-operated, mechanically-interlocked, nonautomatic circuit interupters. The two 6900V feeders are so arranged and rated that each one can feed all four transformers if required. The allocation of individual loads to the distribution cabinets is based on the arrangement of 161-kV connections. Two cabinets, fed from different 6900V sources, supply loads associated with 161-kV bus 2, section 2, and bus 1, section 4. The two other cabinets supply loads associated with 161-kV bus 1, section 2, and bus 2, section 4.

This corresponds to the allocation of the 250V DC control supplies described above. CSSTR A & B have a further division of load arrangement with respect to the two 161-kV circuit breakers (air blast types) and motor operated disconnect switches. The air compressor for each air-blast breaker is supplied power from a different AC distribution cabinet. The two motor-operated disconnect switches associated with each of the two power circuit breakers are also connected to separate AC supplies.

In addition to the indicating lamps and instruments, the control room operator is provided with an annunciation system which, for the 161-kV and 500-kV switchyard, the unit station service transformers, and the common station service transformers, monitors the following:

Operation of any 161-kV power circuit breaker.

Abnormal air pressure in the LP System for each airblast 161-kV power circuit breaker.

Abnormal air pressure in the HP System for each airblast 161-kV power circuit breaker.

Operation of any 500-kV circuit breaker.

SF6 system or spring energy abnormal

Operation of 161-kV bus breakup relays.

Operation of 161-kV bus differential relays.

Breaker supply voltage failure.

Phase failure at any switchyard 480V distribution cabinet.

Relay operation on each transformer circuit.

High temperature of each transformer.

Low oil level in each transformer.

Cooling System supply transfer for each transformer.

Gas pressure abnormal in each transformer.

Fire Protection Sprinkler System on for each transformer.

Breaker failure relay operation for each transformer.

6900V start bus failure or undervoltage.

6900V start bus fan failure.

6900V start bus transfer.

*250V DC control power failure.

250V DC battery charger failure.

250V DC battery board breaker trip or ground.

*Control power failure alarm is initiated by automatic trip of any 250V DC branch circuit breaker in the distribution panels 6, 7 and 8

8.2.1.5 Switchyard Control and Relaying

The 161-kV switchyard is of the main and transfer bus type with sections arranged in a zigzag pattern. This type bus arrangement has two main buses located on opposite sides and opposite ends of the switchyard and two transfer buses located similarly, thus providing physical separation of the main and transfer buses to reduce the likelihood of a single event causing failure of all buses.

CSSTR C, the intertie transformer bank 5, and the main transformer bank No. 2 are terminated in the bus-tie double breaker bays. In the CSSTR A and B bays, the power circuit breakers connected to the transfer bus also serve as a spare breaker for the lines connected to its corresponding main bus section.

Under normal operating conditions all 161-kV circuit breakers and all bus sectionalizing MOD's are closed; all bus sections (main and transfer) are energized, and the line MOD's connected to the transfer bus are open.

This switchyard connection scheme operates two of the CSSTR's in parallel with each other and with the transmission network. CSSTR B is connected to the 161-kV system but does not normally carry load. In the event CSSTR A or C becomes unavailable, the loads supplied by that transformer will be transferred to transformer B. This enhances the reliability of the power supply to the onsite power system from the transmission network in that either circuit is constantly available to perform its design function. At the same time adequate means of electrical isolation of faults are provided to prevent simultaneous loss of both transformers. The means of isolation and protection of the transformers includes:

1. Primary and backup relay protections selected and applied on the basis of long-term operating experience with this type of switchyard arrangement.

2. High-speed power circuit breakers (PCB's) with a tripping time of two cycles having adequate operating and interrupting rating and equipped with redundant trip coils tripped by separate relays.

3. Motor-operated disconnect switches which can be remotely controlled by the operator from the main control room to rapidly isolate sections of the switchyard bus transmission lines and circuit breakers for maintenance or repair.

4. Automatic protection against failure of individual circuit breakers to clear faults.

5. Provision for automatic high and standard speed reclosure of circuit breakers, following certain categories of line faults, to increase the availability of transmission lines from the distribution network.

The design of the offsite power system with its provision of two immediate access circuits from the transmission network, complies with the NRC regulatory position expressed in the Regulatory Guide No. 1.32 Rev. 2 for the preferred design of such a system.

The transmission line relay protection circuits continuously monitor the conditions of the offsite power system and are designed to detect and isolate the faults with maximum speed and minimum of disturbance to the system.

The principal features of these schemes are described below:

The 161-kV lines are protected by three-zone (reversed third zone) step distance phase relays with backup ground relays. The relay potential circuits are fed from a set of potential transformers connected to each main bus section.

The 161-kV transmission line protective relays system is designed to maximize the reliability of the incoming power to the plant. The protective relaying provides for fast detection of faults and should the transmission line protective relays fail to clear the fault, adequate backup protection is available in the form of bus breakup relays. The bus breakup relays consist of impedance and ground relays that initiate a timer. If the fault is not cleared within the time setting of the timer, all breakers connected to the bus section of the faulted line will be tripped and locked out.

Each 161-kV switchyard bus section is protected by a bus differential relay scheme. The bus differential relays continuously monitor the current inflow and outflow from the bus section under their supervision. Whenever the current inflow does not equal the current outflow, the relays operate instantaneously to trip and lock out all breakers in their protected bus section. The bus breakup relays back up the differential relays should they fail to operate. In addition to the line and bus protection schemes, the 161-kV switchyard power transformer breakers are protected by breaker failure relays with current supervision from separate current transformers on the breaker. The breaker failure relays operate through a timing relay and should a breaker fail to trip within the time setting of its timing relay, the associated breaker failure trip relay will trip and lock out both breakers in that particular switchyard bay. The relay will also trip and lock out all breakers connected to the bus associated with the failed breaker. In addition, the breaker failure relays protecting generator 2 power circuit breakers, when operated, will trip turbine steam valves, exciter field breakers, and the associated 6.9-kV breakers on unit station service transformers. Any of the breaker failure relays associated with the intertie transformer bank 5 PCB's will trip and lock out all PCB's connecting it to both the 161-kV and 500-kV switchyards.

The five power transformers (CSSTR's A, B, and C, main transformer bank No. 2, and intertie transformer bank No. 5) are protected as follows:

Each CSSTR is protected by a percentage differential relay with harmonic restraint, a sudden pressure relay, and a neutral overcurrent relay in the 6.9-kV winding neutral.

The operation of the transformer protection relays will trip and lock out the power circuit breakers connecting it to the switchyard, trip and lock out associated 6.9-kV circuit breakers, and starts a high-pressure sprinkler system to prevent or extinguish any possible fire.

The intertie transformer bank No. 5 is protected by a percentage differential relay with harmonic restraint, nondirectional, torque-controlled overcurrent relays and sudden pressure relays. The sudden pressure relays on this transformer will operate to isolate the transformer from both the 161-kV and 500-kV switchyards and the transformer high-pressure fire protection sprinkler system will be started by thermal devices or a sudden pressure device on the transformer.

The main transformer bank No. 2 is protected by differential and sudden pressure relays whose operation trip and lock out the 161-kV breakers connecting it to the switchyard, and the associated 6.9-kV breakers fed from the unit station service transformers and trip the turbine steam valves and exciter field breaker. In addition, the main bank No. 2 transformer protection relays will also trip and lockout the generator circuit breaker.

The supply to the CSSTR's possesses a high degree of reliability even under electrical fault conditions. The following discussion describes the sequence of events following postulated faults:

1. Transmission line fault.

   If the instantaneous element of the line protective relays is actuated the line breaker is tripped and a high speed reclosure occurs. If after the high speed reclosure the fault has not cleared, the breaker will trip again and a standard speed (synchronism check-voltage check) reclosure occurs. In the majority of the cases these reclosures will restore the line back to service. However, a trip after this will lock out the breaker isolating the faulted line. There is no appreciable disturbance on the feeders to the CSSTR's.

2. Transmission line fault and failure of the line circuit breaker to clear the fault.

   The corresponding main bus breakup relay is automatically initiated, starting a timer. If the fault is not cleared within the time setting of the timer, all circuit breakers connected to that bus will be tripped and locked out. With normal position of circuit breakers and MOD's described previously, all CSSTR's (A, B, and C) continue to receive power without interruption.

3. Main bus fault.

   This type of fault is detected by the bus differential protection. When initiated, it trips and locks out the circuit breakers connected to the faulted bus. The effects of this action are similar to those described under 2 above.

4. Transformer or transformer feeder faults.

   These faults cause tripping of all the transformer circuit breakers on the high and low voltage side of the transformer. In addition, the trip relay initiates the transformer fire protection sprinkler and starts the fire pump if the fault is in the transformer.

5. Common transformer or transformer feeder fault and failure of one HV circuit breaker to operate properly.

   These events cause the operation of protection described under 4 above, followed by the operation of the breaker failure relay which trips all breakers connected to the bus at the time of failure. The event results in the loss of one transformer; the other transformers continue to receive power from their main or alternate bus.

The allocation of the 250V DC control power circuits for relays, circuit breaker, and MOD operation (the description of which is included in the preceding section) is coordinated with the switching requirements of the zig zag main and transfer bus arrangement and the requirement for the optimum availability of the CSSTR's.

8.2.1.6 <u>6.9-kV Start Board Control and Relaying</u>

The secondaries of the CSSTRs A, B, and C feed into a 6.9-kV start board containing eight circuit breakers. These breakers are the normal and alternate supply breakers for the four start buses. Start buses 1A and 2A are normally fed from CSSTR A, and start buses 1B and 2B are normally fed from CSSTR C. Transfer to CSSTR B may be automatic or manual but transfer back to the normal source is manual only. There are two automatic transfers to CSSTR B from either CSSTR A or C. Fast transfer is initiated in the event a fault is sensed within the CSSTR, or other transformers supplied from the common source. The other automatic transfer is a slow bus transfer which is initiated by bus undervoltage on the normal feeder (< 70 percent of nominal). The transfer is delayed until the bus residual voltage has decayed to 30 percent of nominal and if the alternate feeder voltage is $\geq$ 90 percent of nominal. Fast transfers are defined as $\leq$ 6 cycle transfers. Both CSSTR A and C can transfer their loads to CSSTR B at the same time automatically for either a fault or undervoltage condition. Manual transfer of the 1A, 1B, 2A, and 2B start bus uses a "make before break" transfer scheme. The undervoltage condition is annunciated in the main control room (MCR).

Each of the four start buses has its own undervoltage detection scheme which will initiate a transfer to its alternate supply (CSSTR B). If an undervoltage transfer of only one start bus occurs then the start board breaker interlock scheme will prevent subsequent start bus transfers except from the same transformer. See Table 8.2.1-1 for complete description of board transfer schemes.

The 250V DC control power for the breakers feeding start bus 1A and 2A is supplied from a battery and battery distribution board separate from that of the breakers feeding start buses 1B and 2B.

The board is protected by overcurrent, ground overcurrent, and differential current protective relays. Manual control of the circuit breakers is provided on the electrical control board in the main control room. The operator has instrumentation showing the voltage on each of the two buses and current flowing in each of the four feeder breakers. The following annunciation is provided:

1. Start Bus Fan Failure
2. Start Bus Transfer
3. Start Bus Failure or Undervoltage

Annunciation of No. 3 above is composed of bus differential relay operation, bus AC voltage failure, and control bus DC voltage failure.

Start bus 1A is the alternate feeder to 6.9-kV unit boards 1A and 1C. Start bus 1B is the alternate feeder to 6.9-kV unit boards 1B and 1D. Start Bus 2A is the normal feeder to 6.9-kV common board A. Start bus 2B is the normal feeder to 6.9-kV common board B. Start bus 2A is the alternate feeder to 6.9-kV unit boards 2A and 2C. Start bus 2B is the alternate feeder to 6.9-kV unit boards 2B and 2D.

8.2.1.7 <u>6.9-kV Unit Board Control and Relaying</u>

The normal feeder to each 6.9-kV unit board is from a USST and the alternate feeder is from one of the start buses.

Each 6.9-kV unit board can be selected for manual transfer between the normal and alternate supply breakers. Manual transfers are high speed (6 cycles or less), and can be made from the normal to the alternate supply or from the alternate to the normal supply. Automatic transfers can only be made from the normal to alternate supply. Automatic transfers initiated by loss of voltage (less than 70 percent of nominal) on the unit board are delayed until the voltage decreases to 30 percent of normal while those initiated by detection of failure of the generator circuit breaker, the power circuit breakers, the main bank or until station service transformers, the isolated phase bus, and the main bank transformer feeder are immediate high speed transfers (6 cycles or less). See Table 8.2.1-1 for complete description of board transfer schemes.

The boards are protected by overcurrent, ground overcurrent, and differential current protective relays. Manual control of the two feeder breakers of each board is provided on the unit control board in the main control room. The operator has instrumentation that gives the voltage and frequency of each board and the current flowing in either of the two feeder breakers. The following annunciation is provided:

1. Unit Board Transfer
2. Unit Board Failure or Undervoltage

Annunciation of No. 2 above is composed of board differential relay operation, board AC voltage failure, and control bus DC voltage failure.

The final link to the onsite (standby) power system (the 6.9-kV shutdown boards) is feeders from the unit boards. Unit boards 1B, 1C, 2B, and 2C are the normal supplies to 6.9-kV shutdown boards 1A-A, 1B-B, 2A-A, and 2B-B, respectively, while unit boards 1A, 1D, 2A, and 2D are the alternate supplies respectively. These feeders are protected by overcurrent and ground overcurrent relays. All of these feeder breakers are normally closed with all transfers between the normal and alternate feeders occurring at the 6.9-kV shutdown board and are manual only.

8.2.1.8 Conformance with Standards

This section discusses provisions included in the design of the offsite power system to achieve a system design in conformance with applicable requirements of GDC 17, Regulatory Guides 1.6 Rev. 0, and 1.32, Rev. 2.

The following requirements of Regulatory Guides 1.6 Rev. 0 and 1.32, Rev. 2, and GDC 17 are applicable:

Regulatory Guide 1.6

Regulatory Guide 1.6, Rev. 0 requires that "Each ac load group should have a connection to the preferred (offsite) power source. A preferred power source may serve redundant load groups."

Regulatory Guide 1.32

Regulatory Guide 1.32, Rev. 2 states that "Criterion 17 delineates the design requirements regarding availability of power from the transmission network. Accordingly, a preferred design would include two immediate access circuits from the transmission network. An acceptable design would substitute a delayed access circuit for one of the immediate access circuits provided that availability of the delayed access circuit conforms to General Design Criterion 17."

Criterion 17

General Design Criterion 17 requires that:

(1) "the offsite power supply be of sufficient capacity and capability to assure, assuming the onsite (standby) power supply is not functioning, that

   (a) specified acceptable fuel design limits and design conditions of the reactor coolant pressure boundary are not exceeded as a result of anticipated operational occurrences.

   and

   (b) the core is cooled and containment integrity and other vital functions are maintained in the event of postulated accidents."

(2) "electric power from the transmission network to the onsite electric distribution system shall be supplied by two physically independent circuits (not necessarily on separate rights of way) designed and located so as to minimize to the extent practical the likelihood of their simultaneous failure under operating and postulated accident and environmental conditions. A switchyard common to both circuits is permitted."

(3) each of the two circuits supplying electric power from the transmission network to the onsite electric distribution system "shall be designed to be available in sufficient time following a loss of all onsite alternating current power supplied and the other offsite electric power circuit, to assure that specified acceptable fuel design limits and design conditions of the reactor coolant pressure boundary are not exceeded."

(4) one of the two circuits supplying electric power from the transmission network to the onsite electric distribution system "shall be designed to be available within a few seconds following a loss-of-coolant accident to assure that core cooling, containment integrity, and other vital safety functions are maintained."

(5) "provisions shall be included to minimize the probability of losing electrical power from any of the remaining sources as a result of, or coincident with, the loss of power from the transmission network, or the loss of power from the onsite electrical power sources."

Security-Related Information - Withhold Under 10 CFR 2.390

Each of the above requirements and the provisions included in the design to meet them is addressed in some form in the discussion which follows:

The discussion is arranged in two parts:

(1) Physical measures for achieving independence and physical measures taken to minimize the likelihood of failures of portions of the offsite power system inducing failure of the other power sources.

(2) Functional provisions for achieving adequate capacity, capability, and availability; functional measures taken to achieve independence; and functional measures taken to minimize the likelihood of failure of portions of the offsite power system inducing failure of other power sources.

Physical Measures

The CSSTR's and buses are connected and arranged to provide two physically independent offsite power circuits to the onsite distribution system. Any one of these can be used as the preferred power supply.

For physical description and characteristics of the common station service buses, see Section 8.2.1.3.

The above ground buses run on separate support structures and run approximately 40 feet before entering the start board: The underground cable buses are located in conduit and run approximately 250 feet before entering the start board. The above ground buses are provided with gas resistant seals at the entry to the switchgear. The start board consists of a normal feeder breaker and an alternate feeder breaker for each start bus which obtain their supply from separate buses and separate CSSTR's, thereby giving each start bus two possible and independent sources of power. The normal supply breaker and the alternate supply breaker for each start bus are separated in the start board by two cubicles, therefore, preventing a fault in one breaker from causing damage to the alternate supply breaker.

From the feeder breakers of the 6.9-kV start board the four 6.9-kV unit start buses run as pairs (1A and 1B, 2A and 2B), each pair on a common support structure parallel and adjacent to the south turbine building wall [redacted] Horizontal spacing of the start buses for this run is 4'-6 inches from centerline-to-centerline and 12 inches minimum between adjacent enclosure walls of the separate buses and minimum vertical spacing is 2'-6 inch centerline-to-centerline with 11-5/16 inches between adjacent enclosure walls of the separate buses. The conductors are fully insulated with flame-retardant material, bus supports are flame retardant, and the metal enclosures will prevent any arcing fault in one bus from damaging the other bus.

The start buses are tapped at appropriate places and routed to the appropriate supply breakers in the 6.9-kV unit and 6.9-kV common boards. The normal supply breaker and alternate supply breaker for each board are separated along the length of the board by several feeder breakers, thereby preventing a fault in one breaker from damaging the alternate supply breaker. All buses are provided with gas-resistant seals at entry to the switchgear.

The power from the unit boards is supplied to the shutdown boards by means of cables routed via separate cable trays and conduits to their respective boards. The minimum distance between trays carrying the normal and alternate cables to the redundant shutdown boards is approximately 30 feet, while the trays carrying normal and alternate supplies to the same shutdown board are at a minimum separation of 1 foot. Circuit breakers have been provided at each end of these cables so that even a simultaneous failure of the normal and alternate supply cables to one shutdown board will not effect the offsite power supply to the redundant board.

During the case of failure or fault of a CSSTR, the spare CSSTR is immediately available if not already providing distribution for the other CSSTR. Refer to Table 8.2.1-1 for transfer information.

Functional Measures

Regulatory Guide 1.6, Rev. 0 has been implemented by providing each redundant load group with a connection to each of the preferred source circuits. Figure 8.1.2-1 indicates that when supplied by preferred power circuits, the redundant load groups in each unit are normally fed from different preferred power source circuits. Figure 8.1.2-1 also indicates that alternate feeder alignments at the start buses may result in feeding redundant load groups in each unit from a common preferred power source circuit. The two preferred power source circuits are shared between the two nuclear units.

Regulatory Guide 1.32, Rev. 2 has been implemented by providing an immediate and delayed access circuits to the transmission network. Figures 8.1.2-1 and 8.2.1-1 indicate the functional arrangement of these continuously-energized circuits.

The rest of the discussion deals mainly with the manner in which GDC 17 has been implemented.

Refer to section 8.2.1.1 for the components that comprise the preferred power system. Analysis to show that GDC 17 is satisfied consists of two parts: (1) a qualitative analysis to show that the loss of any one of the components will not cause loss of availability of offsite power to the 6900-volt shutdown boards, and (2) a quantitative analysis to show that the capacity of each of the components is such that it will carry its required load in the event of a simultaneous LOCA of one unit and orderly safe shutdown of the other unit with any of the other components out of service.

Refer to sections 8.2.1.2 and 8.2.1.3 for arrangement details for the components of the preferred power system. Each CSSTR has two 6.9-kV secondary windings. Each secondary of CSSTR's A and C is the normal source for one start bus with CSSTR B providing the alternate source. Each Unit 1 start bus serves as the alternate source to two of the four Unit 1 6.9-kV unit boards; while each Unit 1 USST serves as the normal source to two of the four Unit 1 6.9-kV unit boards. Each Unit 2 start bus serves as the alternate source to two of the four Unit 2 6.9-kV unit boards; while each Unit 2 USST serves as the normal source to two of the four Unit 2 6.9-kV unit boards. Each of the two 6900-volt shutdown boards for each unit has a normal feed from one unit board and the alternate feed from another unit board. The two unit boards feeding each shutdown board have alternate feeds from different start buses which have automatic transfers to CSSTR B. Unit 1 and 2 6.9-kV unit boards have automatic transfers from the normal feed (USST) to alternate feeds (start buses) as specified in Section 8.2.1.7. Refer to Table 8.2.1-1 for board transfer information. For Unit 1 and 2, the loss of any one USST will not cause loss of availability of offsite power to the 6.9-kV shutdown boards.

The four start buses are physically independent in that each bus has its own housing. Thus each bus is protected against migration of a fault from the other start bus by two barriers. This circuit independence extends through the start board on to the common station service transformer terminals.

In the event of a LOCA on one generating unit and a orderly safe shutdown on the other generating unit when unit boards are aligned to CSSTR's and one CSSTR is out of service, the two remaining CSSTR's will supply power to the emergency loads on the LOCA unit and to those loads on both units associated with normal operation which are not automatically tripped. These normal operation loads are subsequently reduced by action of the unit operators. However, no operator action is assumed during the first 10 minutes following a LOCA. All loads on both 6900-volt shutdown boards which start automatically are assumed to start simultaneously. All unit normal running loads are assumed to remain without reduction following the accident signals, except those loads automatically tripped.

When each USST automatic load lap changer (LTC) control switch is set to automatic, that USST is capable of carrying its required load in the event of a simultaneous LOCA of one unit and orderly safe shutdown of the other unit with any of the components of the preferred power system out of service. When the 6.9-kV unit boards are aligned to USST's, a failure of a USST will initiate a transfer to a CSSTR, which will supply power as specified above (see unit board transfers in Table 8.2.1-1).

The overcurrent protective relays for the 6900-volt breakers are coordinated to provide a selective system for line faults and for ground faults. Thus a fault on a non-safety load circuit supplied from a 6900-volt unit board, will be isolated so that the continuity of power to that unit board and to the shutdown board fed from that unit board will not be jeopardized by the fault. Each 6900-volt unit board main bus is protected by bus differential relays which will isolate this bus in the event of a unit board bus fault. With the change in manual transfer scheme for start bus supply breakers, the Unit 1 and Unit 2 6.9 kV unit boards, and 6.9 kV turbine building common boards may be subjected to a momentary exposure of fault current that exceeds their rating. This condition only occurs while the start bus is being supplied by both transformers during a manual transfer. Due to the low probability of a close-in three phase fault occurring while this parallel configuration exists, this does not impose a significant risk to the switchgear.

In addition to compliance with the above standards for portions of the offsite power system, the 6.9-kV start board, 6.9-kV unit boards, and the associated 6.9-kV buses were procured in accordance with TVA standards and industry standards. TVA specification 1101 required conformance of this equipment to such standards as the following. The overall construction, rating, tests, service conditions, etc., are required to be in conformance to ANSI C37.20 and NEMA SG-5; the power circuit breakers are referenced to ANSI C37.4 to C37.9 and NEMA SG-4; associated relays are specified to conform to ANSI C37.1, instrument transformers to ANSI C57.13 and NEMA EI-02 and wiring to IPCEA S-61-402 and NEMA WC5.

The design of the equipment arrangement was also implemented to comply with GDC 3 for fire protection and with GDC 18 and Regulatory Guide 1.22 for ease of periodic tests and inspections.

8.2.2 Transmission System Studies (TSS)

The eight 161-kV transmission lines connected to the 161-kV switchyard, the 500-161-kV intertie transformer bank, two 84 MVAR capacitor banks for the 161-kV switchyard, and the five 500-kV transmission lines have sufficient capacity to supply the total required power to the plant's electrical auxiliary power system for all modes of plant operation and shutdown. For the normal internal plant load alignment, the TVA transmission system must be capable of supplying a minimum of 153 kV with a maximum voltage drop of 13 kV during a loss of coolant accident (LOCA) in one unit, followed by an orderly safe shutdown of the other unit. Physical separation of the lines, primary and backup protection systems, and a strong transmission grid minimize the probability of simultaneous transmission failures affecting the offsite power sources.

Steady state analysis shows that the transmission network is a reliable supply to the preferred power system for all modes of plant operation and shutdown.

Steady-state load flow studies have been performed of power flow around the Sequoyah 500- and 161-kV buses for design-basis event scenarios consisting of a shutdown with a LOCA in one unit . This analysis of system adequacy to safely shutdown the SQN units includes scenarios that simulate an outage of the largest generating unit or the loss of the most critical element prior to the DBE. Transient stability studies were also performed for a LOCA shutdown of one unit. Additional stability studies (with no design-basis event) considered transmission contingencies resulting in the loss of one or more components. They show that the resulting disturbance to the offsite power system is acceptable, and the transmission system remains stable. In none of the steady-state or transient stability design-basis event cases was the off-site power sources incapacitated because of thermal over loads, voltage variations or frequency deviations so as to decrease the availability of the transmission system to supply power to the onsite power system.

Due to the large number of diverse generating units and strong interconnections, the likelihood of an outage of a sufficient part of the transmission system to cause the loss of all sources of external power is considered to be extremely remote. In the event such a disturbance occurs, TVA's power dispatchers will isolate the Sequoyah 161-kV switchyard with hydro generation within the proximity of Sequoyah so that critical power needs can be supplied.

TABLE 8.2.1-1 (Sheet 1)

AUXILIARY POWER SUPPLIES AND BUS TRANSFER SCHEMES

General Remarks:

1. Start Bus 1A, 1B, 2A and 2B supply breakers parallel sources when manually transferring.

2. Unit 1 is shown. Unit 2 is similar except for unit designation. Unit 2 is shown for those exceptions.

Item	Board/Bus	Power Supplies Normal	Power Supplies Alternate	Remarks
1	6.9-kV Start Bus 1A	Common Station Service Trans A, X Winding	Common Station Service Trans B, X Winding	The secondaries of the CSSTR's A, B, and C feed into the 6.9-kV start board containing eight circuit breakers. These breakers are the normal and alternate supply breakers for the four start buses. Start buses 1A and 2A are normally fed from CSSTR A, and start buses 1B and 2B are normally fed from CSSTR C. Transfer to CSSTR B may be automatic or manual but transfer back to the normal source is manual only. There are two automatic transfers to CSSTR B from either CSSTR A or C. Fast transfer is accomplished by having the start board breakers control switches in the auto position and is initiated in the event a fault is sensed within the CSSTR, other transformers supplied from the common source, or in the supply sources to the CSSTR. The other automatic transfer is a slow bus transfer which is initiated by bus undervoltage. The slow bus transfer is accomplished by having the start board breaker control switches in the auto position and is initiated by undervoltage on the normal feeder (< 70 percent of nominal) and is delayed until the bus residual voltage has decayed to 30 percent of nominal and if the alternate feeder voltage is ≥ 90 percent of nominal. Fast transfers are defined as ≤ 6 cycle transfers. Manual transfers on Start Bus 1A and 1B are achieved by closing the standby transformer feeder breaker, observing a closed indication as well as load pickup, and opening the original feeder breaker. Start Bus 1A and 1B can transfer load to CSSTR B while CSSTR B is supplying load to the other Unit 1 bus. The undervoltage condition at 70 percent nominal voltage is annunciated in the main control room (MCR).
2	6.9-kv Start Bus 1B	Common Station Service Trans C, Y Winding	Common Station Service Trans B, Y Winding	
2A	6.9-kv Start Bus 2A	CSST A Y Winding	CSST B Y Winding	
2B	6.9-kv Start Bus 2B	CSST C X Winding	CSST B X Winding	
3	6.9-kv Unit Board 1A	USST 1A	START BUS 1A	Manual transfers and automatic transfers (except loss-of-voltage) are fast transfers (≤ 6 cycles). Automatic transfers are initiated upon the following: Loss-of-voltage at unit board: (at board voltage ≤ 70% opens normal breaker, at board voltage ≤30% closes alternate breaker). Generator circuit breaker failure: (detection that current is flowing through GCB after trip) Power circuit breaker failure: (same as GCB failure but for PCB 5034 and 5038) Failure of main bank transformers: (transfers upon detection of current differential, sudden pressure, overcurrent, internal fault) Failure of USST: (transfers upon detection of current differential, sudden pressure, overcurrent, V/Hz limit exceeded) Failure of Isolated phase bus/main bank transformer: (transfers upon impedance protection detection of fault, detection of current differential) Failure of main bank transformer feeder: (transfers upon detection of current differential on feeder from switchyard to main bank transformer)
4	6.9-kV Unit Board 1B	USST 1A	START BUS 1B	
5	6.9-kv Unit Board 1C	USST 1B	START BUS 1A	
6	6.9-kv Unit Board 1D	USST 1B	START BUS 1B	

TABLE 8.2.1-1 (Sheet 2)

AUXILIARY POWER SUPPLIES AND BUS TRANSFER SCHEMES

Item	Board/Bus	Power Supplies Normal	Power Supplies Alternate	Remarks
15	6.9-kV Shutdown Board 1A-A	6.9-kV Unit Board 1B	6.9-kV Unit Board 1A Standby - Diesel Gen 1A-A	Transfer between the normal and alternate sources will be manual fast transfer (≤ 6 cycles). Loss-of-bus voltage (≤ 80 percent) for 1.25 seconds starts the diesel generators, trips incoming feeder breakers and most motor breakers. When diesel generator is up to rated speed and voltage, the emergency breaker will close automatically to connect the diesel to the board, and loads will be applied as required by a sequential timer. Return to normal supply is manual only and is a fast transfer (≤ 6 cycles). Normal or alternate feeder breaker is tripped and annunciated in the MCR after a time delay of 1.25 seconds on loss of voltage condition at 80% nominal. Transfer to the diesel generator for a sustained degraded undervoltage (UV) is initiated at setpoint 9.5 seconds (if a SI has been initiated, or is subsequently initiated) and 5 minutes for non-SI if below setpoint of 93.5% nominal. MCR annunciation occurs for UV of 93.5% nominal and overvoltage of 105% nominal. Transfer to the diesel generator for a sustained unbalanced voltage is initiated upon makeup of the designed permissive 1 out of 2 logic. MCR annunciation occurs when the alarm relay (permissive) actuates ahead of a full logic actuated trip. The shutdown utility bus allows any 6.9-kV shutdown board to be connected to any other or all other 6.9-kV shutdown boards. All circuit breakers connected to this bus are normally open and disconnected. Use of the bus requires manual insertion and closing of two of the breakers.
16	6.9-kV Shutdown Board 1B-B	6.9-kV Unit Board 1C	6.9-kV Unit Board 1D Standby - Diesel Gen 1B-B	
3A	6.9-kV Unit Board 2A	USST 2A	Start Bus 2A	Manual transfers and automatic transfers (except loss-of-voltage) are fast transfers (≤ 6 cycles) Automatic transfers are initiated upon the following: Loss-of-voltage at Unit Board: (at board voltage ≤ 70% opens normal breaker, at board voltage ≤ 30% closes alternate breaker) General Circuit Breaker Failure: (detection that current is flowing through GCB after trip) Power Circuit Breaker Failure: (same as GCB failure but for PCB 924 and 928) Failure of Main Bank Transformers: (transfers upon detection of current differential, sudden pressure, overcurrent internal fault) Failure of USST: (transfers upon detection of current differential, sudden pressure, overcurrent V/Hz limit exceeded Failure of Isolated Phase Bus/Main Bank Transformer: (transfers upon impedance protection, detection of fault, detection of current differential) Failure of Main Bank Transformer Feeder: (transfers upon detection of current differential on feeder from switchyard to main bank transformer)
4A	6.9-kV Unit Board 2B	USST 2A	Start Bus 2B	
5A	6.9-kV Unit Board 2C	USST 2B	Start Bus 2A	
6A	6.9-kV Unit Board 2D	USST 2B	Start Bus 2B	

TABLE 8.2.1-1 (Sheet 3)

AUXILIARY POWER SUPPLIES AND BUS TRANSFER SCHEMES

Item	Board/Bus	Power Supplies Normal	Power Supplies Alternate	Remarks
19	480V Shutdown Board 1A1-A	6.9-kV Shutdown Board 1A-A Via Trans 1A1-A	6.9-kV Shutdown Board 1A-A Via Trans 1A-A	Transfer between normal and alternate is manual. MCR is annunciated on undervoltage at 95% nominal voltage.
20	480V Shutdown Board 1A2-A	6.9-kV Shutdown Board 1A-A Via Trans 1A2-A	"	"
21	480V Shutdown Board 1B1-B	6.9-kV Shutdown Board 1B-B Via Trans 1B1-B	6.9-kV Shutdown Board 1B-B Via Trans 1B-B	Transfer between normal and alternate is manual, with annunciation in MCR.
22	480V Shutdown Board 1B2-B	6.9-kV Shutdown Board 1B-B Via Trans 1B2-B	6.9-kV Shutdown Board 1B-B Via Trans 1B-B	"
23	480V ERCW MCC 1A-A	6.9-kV Shutdown Board 1A-A Via ERCW Trans 1A-A	480V ERCW MCC 2A-A	"
24	480V ERCW MCC 1B-B	6.9-kV Shutdown Board 1B-B Via ERCW Trans 1B-B	480V ERCW MCC 2B-B	"
25	480V ERCW MCC 2A-A	6.9-kV Shutdown Board 2A-A Via ERCW Trans 2A-A	480V ERCW MCC 1A-A	"
26	480V ERCW MCC 2B-B	6.9-kV Shutdown Board 2B-B Via ERCW Trans 2B-B	480V ERCW MCC 1B-B	"
27	480V Reactor MOV Board 1A1-A	480V Shutdown Board 1A1-A	480V Shutdown Board 1A2-A	"
28	480V Reactor MOV Board 1A2-A	480V Shutdown Board 1A2-A	480V Shutdown Board 1A1-A	"

TABLE 8.2.1-1 (Sheet 4)

AUXILIARY POWER SUPPLIES AND BUS TRANSFER SCHEMES

Item	Board/Bus	Power Supplies Normal	Power Supplies Alternate	Remarks
29	480V Reactor MOV Board 1B1-B	480V Shutdown Board 1B1-B	480V Shutdown Board 1B2-B	Transfer between normal and alternate is manual, with annunciation in the MCR.
30	480V Reactor MOV Board 1B2-B	480V Shutdown Board 1B2-B	480V Shutdown Board 1B1-B	"
31	480V C & AB Vent Board 1A1-A	480V Shutdown Board 1A1-A	480V Shutdown Board 1A2-A	"
32	480V C & AB Vent Board 1A2-A	480V Shutdown Board 1A2-A	480V Shutdown Board 1A1-A	"
33	480V C & AB Vent Board 1B1-B	480V Shutdown Board 1B1-B	480V Shutdown Board 1B2-B	"
34	480V C & AB Vent Board 1B2-B	480V Shutdown Board 1B2-B	480V Shutdown Board 1B1-B	"
35	480V Reactor Vent Board 1A-A	480V Shutdown Board 1A1-A	480V Shutdown Board 1A2-A	"
36	480V Reactor Vent Board 1B-B	480V Shutdown Board 1B1-B	480V Shutdown Board 1B2-B	"
37	480V Diesel Aux Board 1A1-A	480V Shutdown Board 1A1-A	480V Shutdown Board 1A2-A	"
38	480V Diesel Aux Board 1A2-A	480V Shutdown Board 1A2-A	480V Shutdown Board 1A1-A	"

TABLE 8.2.1-1 (Sheet 5)

AUXILIARY POWER SUPPLIES AND BUS TRANSFER SCHEMES

Item	Board/Bus	Power Supplies Normal	Power Supplies Alternate	Remarks
39	480V Diesel Aux Board 1B1-B	480V Shutdown Board 1B1-B	480V Shutdown Board 1B2-B	Transfer between normal and alternate is manual, with annunciation in MCR.
40	480V Diesel Aux Board 1B2-B	480V Shutdown Board 1B2-B	480V Shutdown Board 1B1-B	"

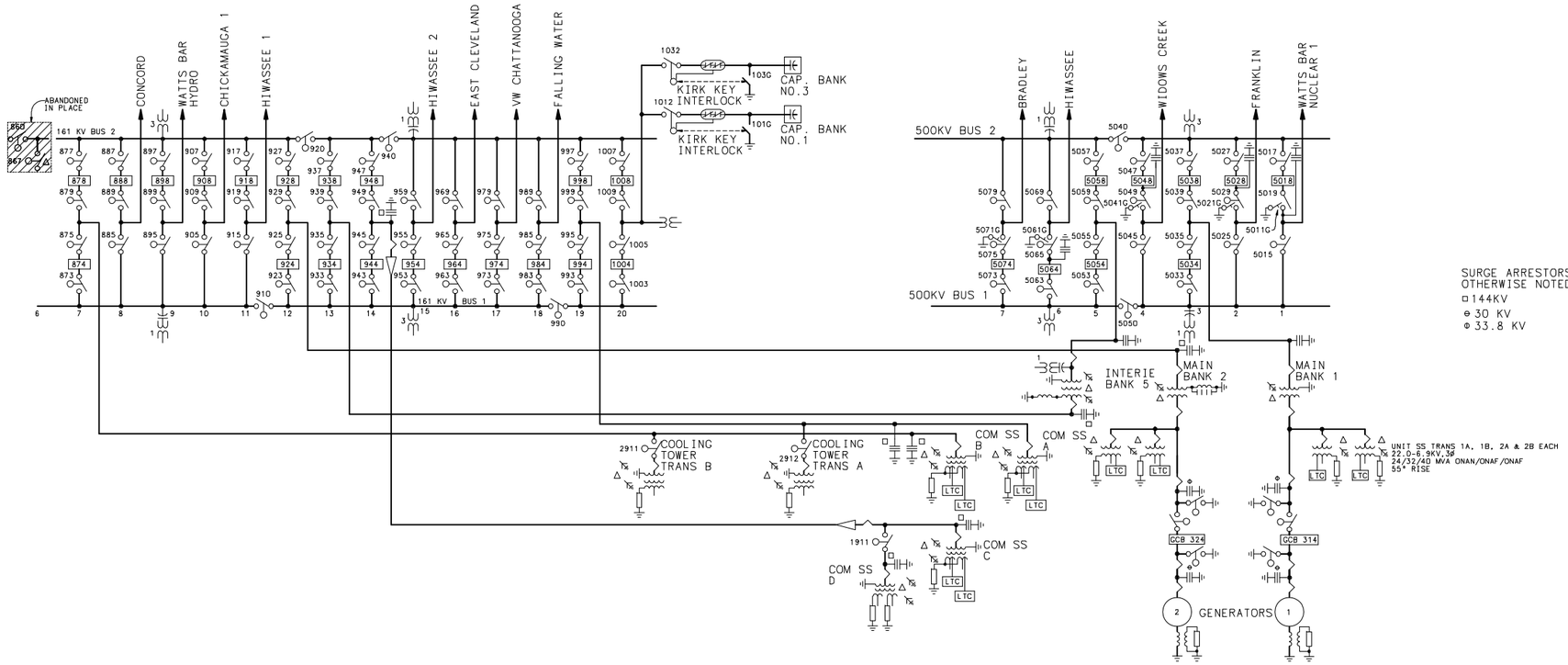

SURGE ARRESTORS ARE 420KV UNLESS OTHERWISE NOTED
□ 144KV
⊖ 30 KV
⊕ 33.8 KV

COM SS TRANS A,B,&C
161-6.9KV,3Ø
33/44/55 MVA 55° RISE
161 KV WINDING
24/32/40 MVA 55° RISE
EACH 6.9KV WINDING OA/FA/FOA
CSST A, B & C
6.9KV X & Y WINDINGS ARE EACH EQUIPPED WITH AUTO LOAD TAP CHANGER (LTC).
COOLING TOWER TRANS A&B
161-6.9KV,3Ø
18/24/30 MVA 55° RISE
OA/FA/FOA

COMM SS TRANS D
161-13.8-6.9KV 3Ø
39/52/65 MVA
161KV WINDING
18/24/30 MVA
13.8KV WINDING
28.8/38.4/48 MVA
6.9KV WINDING
OA/FA/FOA

INTERTIE TRANS BANK 5
2-1Ø (5C,5SP)161-13.2-500KV
240/320/400 MVA 55° RISE,
OA/FA/FA
2-1Ø(5A,5B)165.025-13.2-500KV
269/358/448 MVA 65° RISE,
ONAN/ONAF/ONAF

SEQUOYAH NUCLEAR PLANT
FINAL SAFETY
ANALYSIS REPORT

FIGURE 8.2.1-1

WIRING DIAGRAMS
DEVELOPMENT SINGLE LINE
(REVISED BY AMENDMENT 30)

CAD MAINTAINED DRAWING

Security-Related Information - Figure 8.2.1-2 Withhold Under 10 CFR 2.390

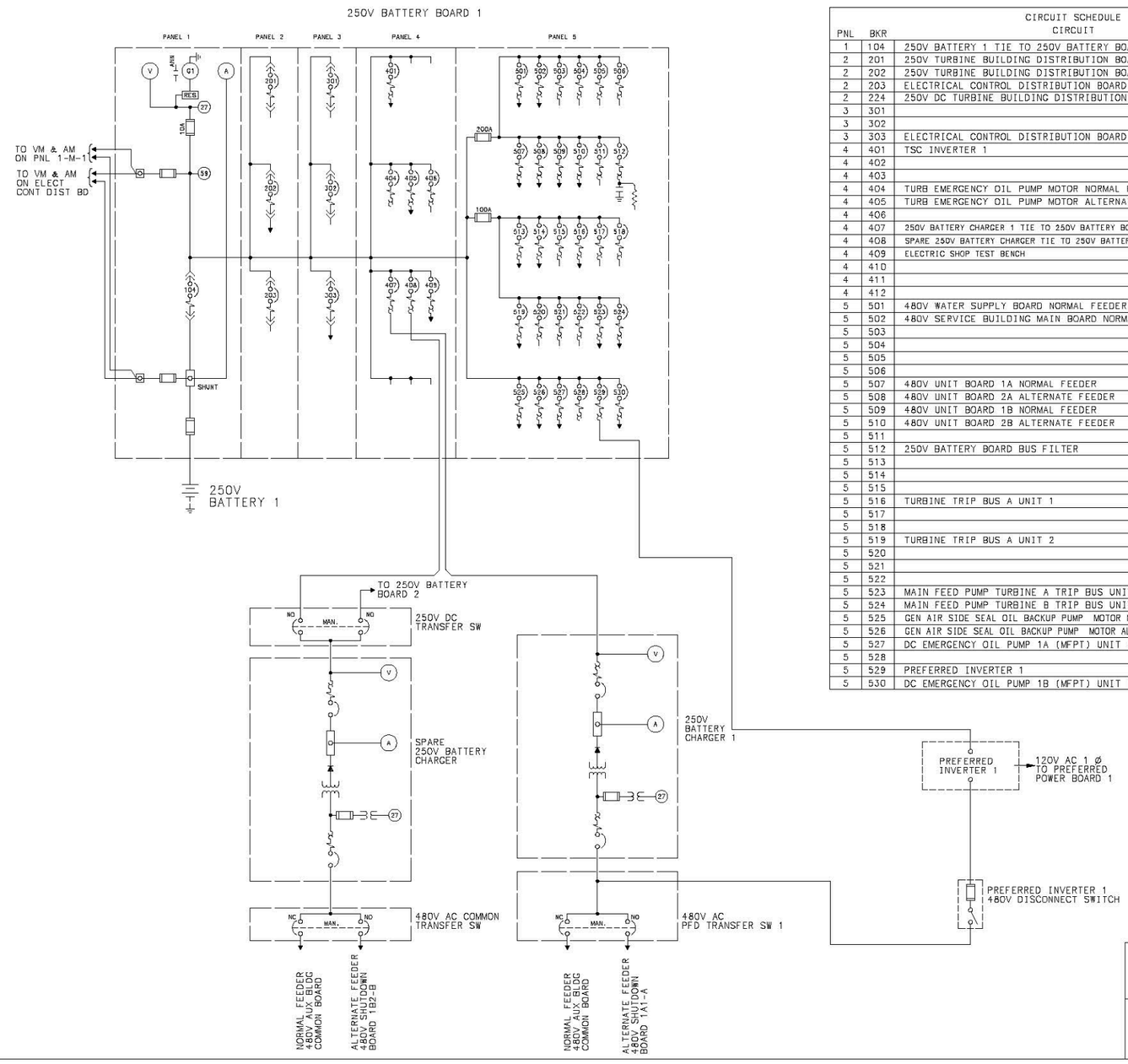

CIRCUIT SCHEDULE

PNL	BKR	CIRCUIT
1	104	250V BATTERY 1 TIE TO 250V BATTERY BOARD 1 (NOTE 4)
2	201	250V TURBINE BUILDING DISTRIBUTION BOARD 1 NORMAL FEEDER
2	202	250V TURBINE BUILDING DISTRIBUTION BOARD 2 ALTERNATE FEEDER
2	203	ELECTRICAL CONTROL DISTRIBUTION BOARD PNL 7 & 8 NORMAL FEEDER
2	224	250V DC TURBINE BUILDING DISTRIBUTION SUBPANEL 1A
3	301	
3	302	
3	303	ELECTRICAL CONTROL DISTRIBUTION BOARD PNL 6 ALTERNATE FEEDER
4	401	TSC INVERTER 1
4	402	
4	403	
4	404	TURB EMERGENCY OIL PUMP MOTOR NORMAL FEEDER UNIT 1
4	405	TURB EMERGENCY OIL PUMP MOTOR ALTERNATE FEEDER UNIT 2
4	406	
4	407	250V BATTERY CHARGER 1 TIE TO 250V BATTERY BOARD 1
4	408	SPARE 250V BATTERY CHARGER TIE TO 250V BATTERY BOARD 1
4	409	ELECTRIC SHOP TEST BENCH
4	410	
4	411	
4	412	
5	501	480V WATER SUPPLY BOARD NORMAL FEEDER
5	502	480V SERVICE BUILDING MAIN BOARD NORMAL FEEDER
5	503	
5	504	
5	505	
5	506	
5	507	480V UNIT BOARD 1A NORMAL FEEDER
5	508	480V UNIT BOARD 2A ALTERNATE FEEDER
5	509	480V UNIT BOARD 1B NORMAL FEEDER
5	510	480V UNIT BOARD 2B ALTERNATE FEEDER
5	511	
5	512	250V BATTERY BOARD BUS FILTER
5	513	
5	514	
5	515	
5	516	TURBINE TRIP BUS A UNIT 1
5	517	
5	518	
5	519	TURBINE TRIP BUS A UNIT 2
5	520	
5	521	
5	522	
5	523	MAIN FEED PUMP TURBINE A TRIP BUS UNIT 1
5	524	MAIN FEED PUMP TURBINE B TRIP BUS UNIT 1
5	525	GEN AIR SIDE SEAL OIL BACKUP PUMP MOTOR NORMAL FEEDER UNIT 1
5	526	GEN AIR SIDE SEAL OIL BACKUP PUMP MOTOR ALTERNATE FEEDER UNIT 2
5	527	DC EMERGENCY OIL PUMP 1A (MFPT) UNIT 1
5	528	
5	529	PREFERRED INVERTER 1
5	530	DC EMERGENCY OIL PUMP 1B (MFPT) UNIT 1

SEQUOYAH NUCLEAR PLANT
FINAL SAFETY
ANALYSIS REPORT

FIGURE 8.2.1-3
250 VOLT BATTERY SYSTEM
(REVISED BY AMENDMENT 26)

250 VOLT BATTERY BOARD 2

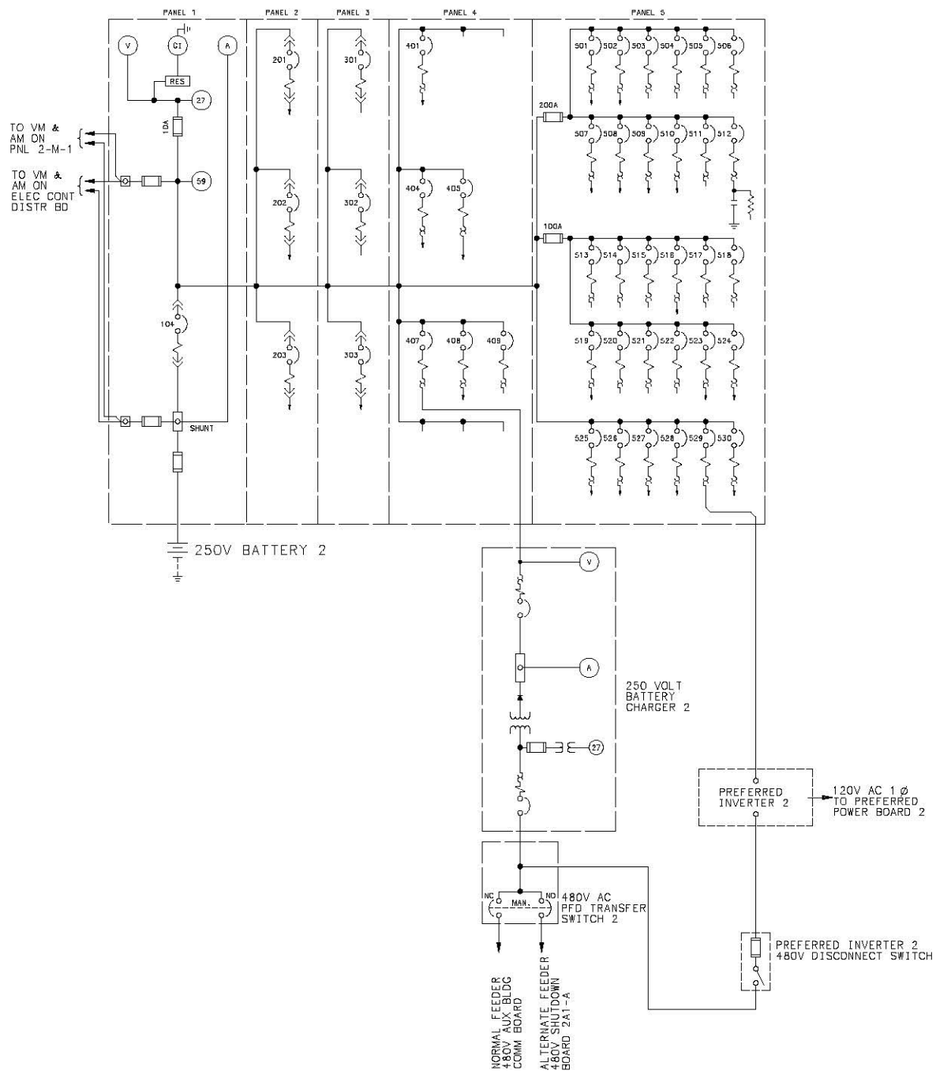

CIRCUIT SCHEDULE		
PNL	BKR	CIRCUIT
1	104	250V BATTERY 2 TIE TO 250V BATTERY BOARD 2 (NOTE 4)
2	201	250V TURBINE BUILDING DISTRIBUTION BOARD 1 ALTERNATE FEEDER
2	202	250V TURBINE BUILDING DISTRIBUTION BOARD 2 NORMAL FEEDER
2	203	ELECTRICAL CONTROL DISTRIBUITON BOARD PNL 7 & 8 ALTN FDR
2	224	250V DC TURBINE BUILDING DISTRIBUTION SUBPANEL 2A
3	301	
3	302	
3	303	ELECTRICAL CONTROL DISTRIBUITON BOARD PNL 6 NORMAL FDR
4	401	TSC INVERTER 2
4	402	
4	403	
4	404	TURB EMERGENCY OIL PUMP MOTOR ALTERNATE FEEDER UNIT 1
4	405	TURB EMERGENCY OIL PUMP MOTOR NORMAL FEEDER UNIT 2
4	407	250V BATTERY CHARGER 2 TIE TO 250V BATTERY BOARD 2
4	408	SPARE 250V BATTERY CHARGER TIE TO 250V BATTERY BOARD 2
4	409	
4	410	
4	411	
4	412	
5	501	480V WATER SUPPLY BOARD ALTERNATE FEEDER
5	502	480V SERVICE BUILDING MAIN BOARD ALTERNATE FEEDER
5	503	
5	504	
5	505	
5	506	
5	507	480V UNIT BOARD 1A ALTERNATE FEEDER
5	508	480V UNIT BOARD 2A NORMAL FEEDER
5	509	480V UNIT BOARD 1B ALTERNATE FEEDER
5	510	480V UNIT BOARD 2B NORMAL FEEDER
5	511	
5	512	250V BATTERY BOARD 2 BUS FILTER
5	513	
5	514	
5	515	
5	516	TURBINE TRIP BUS B UNIT 1
5	517	
5	518	
5	519	TURBINE TRIP BUS B UNIT 2
5	520	
5	521	
5	522	
5	523	MAIN FEED PUMP TURBINE A TRIP BUS UNIT 2
5	524	MAIN FEED PUMP TURBINE B TRIP BUS UNIT 2
5	525	GEN AIR SIDE SEAL OIL BACKUP PUMP MOTOR ALTN FEEDER UNIT 1
5	526	GEN AIR SIDE SEAL OIL BACKUP PUMP MOTOR NORMAL FDR UNIT 2
5	527	D.C. EMERGENCY OIL PUMP 2A (MFPT) UNIT 2
5	528	
5	529	PREFERRED INVERTER 2
5	530	D.C. EMERGENCY OIL PUMP 2B (MFPT) UNIT 2

SEQUOYAH NUCLEAR PLANT
FINAL SAFETY
ANALYSIS REPORT

FIGURE 8.2.1-4
250 VOLT BATTERY SYSTEM
(REVISED BY AMENDMENT 26)

CAD MAINTAINED DRAWING

Security-Related Information - Figure 8.2.1-5 Withhold Under 10 CFR 2.390

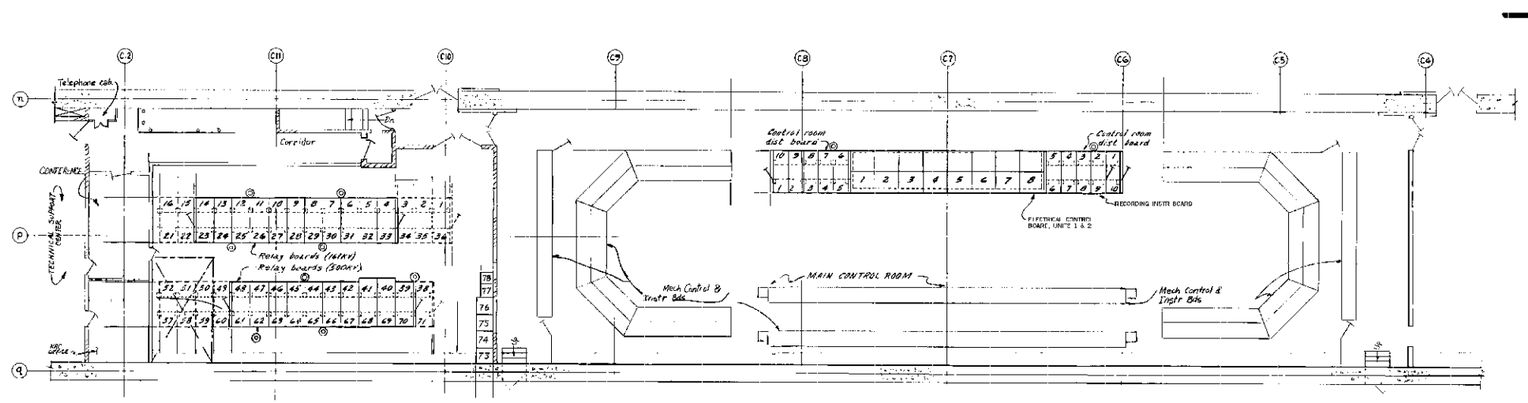

PLAN - EL 732.0

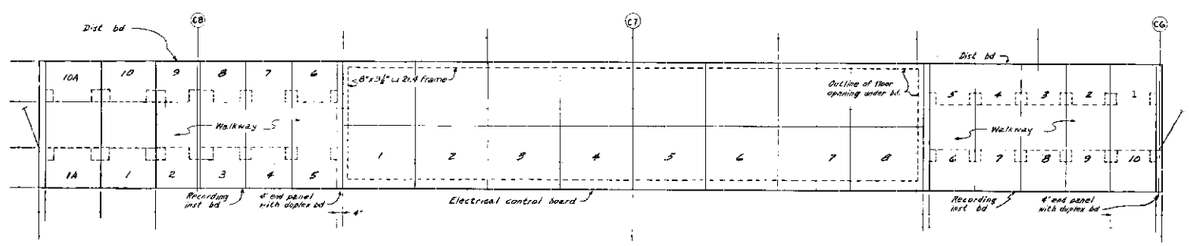

PLAN - ELECTRICAL CONTROL BOARD

PNL NO.	RELAYS BOARDS	PNL NO.	RELAY BOARDS	PNL NO.	RELAY BOARDS
1	FUTURE	25	161KV LINE (SWYD BAY 4)	49	FUTURE
2	FUTURE	26	161KV LINE (SWYD BAY 10)	50	FUTURE
3	FUTURE	27	161KV LINE (SWYD BAY 11)	51	FUTURE
4	161KV - UNIT 2	28	COMMON STA SERV TRANS C	52	FUTURE
5	161KV - UNIT 2	29	161KV LINE (SWYD BAY 15)	53	FUTURE
6	161KV LINE SPARE RELAYS 3	30	161KV LINE (SWYD BAY 16)	54	FUTURE
7	COMMON STA SERV TRANS A	31	161KV LINE (SWYD BAY 17)	55	FUTURE
8	COOLING TOWER TRANSFORMER A	32	161KV LINE (SWYD BAY 18)	56	FUTURE
9	161KV BUS & DIFF, SECT 2	33	161KV CAPICATOR BANK (SWYD BAY 20 & CAP. YARD)	57	FUTURE
10	161KV BUS & DIFF, SECT 3	34	FUTURE	58	FUTURE
11	FUTURE	35	FUTURE	59	FUTURE
12	161KV LINE SPARE RELAYS 2	36	FUTURE	60	FUTURE
13	161KV OSCILLOGRAPH 1			61	500KV - UNIT 1
14	161KV OSCILLOGRAPH 1	38	FUTURE	62	500KV - UNIT 1
15	FUTURE	39	500KV LINE (SWYD BAY 7)	63	500KV BUS DIFF & AUTO STA RELAYS
16	FUTURE	40	500KV LINE (SWYD BAY 7)	64	500KV BUS DIFF
17	FUTURE	41	500KV LINE (SWYD BAY 4)	65	500KV INTER-TIE, TRANS 5
18	FUTURE	42	500KV LINE (SWYD BAY 4)	66	500KV INTER-TIE, TRANS 5
19	FUTURE	43	500KV LINE SPARE RELAYS 2	67	500KV OSCILLOGRAPH 2
20	FUTURE	44	500KV LINE (SWYD BAY 6)	68	500KV OSCILLOGRAPH 2
21	FUTURE	45	500KV LINE (SWYD BAY 2)	69	COM STA SERV TRANS B
22	FUTURE	46	500KV LINE SPARE RELAYS 1	70	COOLING TOWER TRANSFORMER B
23	COMMON STA SERV TRANS D	47	500KV LINE (SWYD BAY 1)	71	FUTURE
24	FUTURE	48	FUTURE		
				73	500KV LINE (SWYD BAY)
				74	500KV LINE (SWYD BAY)
				75	500KV LINE (SWYD BAY 6)
				76	500KV LINE (SWYD BAY 6)
				77	500KV LINE (SWYD BAY 2)
				78	500KV LINE (SWYD BAY 2)

PNL NO.	MAIN CONTROL BOARD	PNL NO.	MAIN CONTROL BOARD
1	FUTURE	5	COMMON STA SERV TRANS A
	FUTURE		
	FUTURE		CAPACITOR FEEDER BREAKERS
	FUTURE		CAPACITOR YARD
	FUTURE		CAPACITOR YARD
			FUTURE
2	FUTURE	6	FUTURE
	COMMON STA SERV TRANS B		FUTURE
	161KV LINE (SWYD BAY 8)		FUTURE
	161KV LINE (SWYD BAY 9)		500KV LINE (SWYD BAY 7)
3	161KV LINE (SWYD BAY 10)	7	500KV LINE (SWYD BAY 6)
	161KV LINE (SWYD BAY 11)		INTER-TIE TRANS 5
	161KV - UNIT 2		500KV LINE (SWYD BAY 4)
	INTER-TIE TRANS 5		
4	COMMON STA SERV TRANS C & D	8	500KV - UNIT 1
	161KV LINE (SWYD BAY 15)		500KV LINE (SWYD BAY 2)
	161KV LINE (SWYD BAY 16)		500KV LINE (SWYD BAY 1)
	161KV LINE (SWYD BAY 17)		
	161KV LINE (SWYD BAY 18)		

PNL NO.	RECORDING INSTRUMENT BOARD
1	COOLING TOWER PANEL 0-M-28A
2	BLANK
3	GEN & UNIT STA SERV TRANS WHM
4	COMMON STA SERV TRANS & PLANT BOWEN WHM
5	250V D-C SUPPLY LIGHTS
6	48V D-C & 120V A-C SUPPLY LIGHTS
7	PROCUREMENT RECORDER & GRAPHIC METER
8	RECORDING WATTHOUR REC POT
9	TRANS 3 TEMP RECORDER & GRAPHIC WHM
10	RADIATION MONITORING PNL 1-M-30
1A	RADIATION MONITORING PNL 2-M-30

PNL NO.	DC DISTRIBUTION BOARD
1	RADIATION MONITORING PNL 1-M-31
2	120V A-C PREFERRED
3	BLANK
4	BLANK
5	48V D-C DISTRIBUTION
6	250V D-C DISTRIBUTION
7	250V D-C DISTRIBUTION
8	250V D-C DISTRIBUTION
9	
10	COOLING TOWER PLANT 0-M-28B
10A	RADIATION MONITORING PNL 2-M-31

SEQUOYAH NUCLEAR PLANT
FINAL SAFETY
ANALYSIS REPORT

FIGURE 8.2.1-6

EQUIPMENT-ELECTRICAL CONTROL
AREA PLAN-EL 732.0
(REVISED BY AMENDMENT 13)

DRAWING SERVICES UNIT
PROCAD MAINTAINED DRAWING
THIS CONFIGURATION CONTROL DRAWING IS MAINTAINED BY THE SQN CAD UNIT AND IS PART OF THE IVA PROCADAM DATABASE.
COMPUTER GRAPHICS

8.3 ONSITE POWER SYSTEM

The Class 1E electric systems provide the electric power used to safely shut down the reactor and limit the release of radioactive material following a design basis event. The electric systems included are comprised of the following interrelated systems:

1. Alternating-current (AC) power systems.
2. Direct-current (DC) power systems.
3. Vital instrumentation and control power systems.

8.3.1 Alternating Current (AC) Power System

The onsite AC power system is a Class 1E System, which consists of: (1) the Standby AC Power System, and (2) the 120V Vital AC System. The safety function of the Standby Power System is to supply power to permit functioning of components and systems required to assure that (1) fuel design limits and reactor coolant pressure boundary design conditions are not exceeded due to anticipated operational occurrences, and (2) the core is cooled and vital functions are maintained in the event of postulated accidents, subject to loss of the Preferred Power System and subject to any single failure in the Standby Power System. The safety function of the 120V Vital AC System is to supply power continuously to reactor protection, instrumentation, and control systems; engineered safety features instrumentation, and control systems; and other safety-related components and systems, subject to loss of all AC power and any single failure within the Vital AC System.

8.3.1.1 Description

Standby AC Power System

The Standby AC Power System is a safety-related system, which supplies power for energizing all AC-powered electrical devices essential to safety. Power continuity to the 6.9-kV Shutdown Boards is maintained by switching among, the normal source (from a unit board), the alternate source (from a different unit board), and the standby (onsite) source. The feeders are also known as the normal, the alternate, and the emergency, respectively. Source selection for a loss of voltage is accomplished by automatically transferring from the normal or alternate source to the standby source. The reverse transfer is manual. The circuits connecting the normal, alternate, and standby sources to the distribution portion of the Standby Power System are shown in Figure 8.1.2-1. The normal and alternate power circuits and the transfer scheme used to effect the source switching of these circuits is further discussed in section 8.2.

System Structure

Figure 8.1.2-1 is the single line representation of the plant AC auxiliary power distribution system. The standby portion of the system is identified as the diesel generators, the 6.9-kV shutdown boards, the 480V shutdown boards, and all motor control centers supplied by the 480V shutdown boards for both units.

The Standby Power System serving each unit is divided into two redundant load groups (power trains). These power trains (train A and train B for each unit) supply power to safety-related equipment. The power train assignment for safety-related electrical boards is indicated by use of a -A, -B, or -S (special) suffix following its designation on drawings and documents. Loads supplied from these boards are safety-related unless designated on the single line drawings with a triangle symbol (▤). Nonsafety-related loads are supplied from the Standby Power System through Class 1E Overcurrent Protection Devices.

The sources and boards comprising each power train are listed in Figure 8.1.2-1.

The ERCW pumping station 480 VAC motor control centers, which have only a 1E power source, are an exception to the normal use of train separation nomenclature. Non-safety related

loads are powered from a portion of the 1E bus that is isolated (shunt tripped) on a loss of offsite power signal. Although these loads are designated with the ▤ symbol, they carry train designated nomenclature to verify they meet all the project separation criteria.

Physical Arrangement of Components

The boards, motor control centers, and transformers comprising the system are arranged to provide physical independence and electrical separations between power trains necessary for eliminating credible common mode failures.

The specific arrangements of these major components are described as follows:

Diesel Generators

Reference: Figure 1.2.3-17

The physical arrangement of the four diesel generators and all support equipment provides physical independence by isolation. Each diesel and its associated support equipment is separated from all other units by missile and fire barrier type walls and physical separation in the DGB corridor.

6900-Volt Shutdown Boards 1A-A, 1B-B, 2A-A, and 2B-B

Reference: Figure 1.2.3-3.

These boards are located in the auxiliary building at elevation 734.0. They are arranged electrically into two power trains with two boards associated with each train and each unit. The boards comprising train A are located in the unit 1 side and those of train B are located in the Unit 2 side. The train A boards are separated from the train B boards by an reinforced concrete block wall extended to the ceiling. The minimum distance between train A and train B boards is 9 feet (including the block wall). The two boards associated with each train are separated from each other by approximately 21 feet. The logic relay panels for both units are located between these panels.

6900-480-Volt Shutdown Board Transformers 1A1-A, 1A-A, 1A2-A, 1B1-B, 1B-B, 1B2-B, 2A1-A, 2A-A, 2A2-A, 2B1-B, 2B-B, and 2B2-B

Reference: Figure 1.2.3-2.

These transformers are located in the auxiliary building at elevation 749.0. Four rooms have been provided so that the transformers associated with train A and B of both nuclear units are in separate rooms. The walls isolating these rooms are made of reinforced concrete blocks and extend to the ceiling. The three transformers associated with one train of each unit are located in one of the four rooms and are separated from each other by an 8 foot tall reinforced concrete block wall.

480-Volt Shutdown Boards 1A1-A, 1A2-A, 1B1-B, 1B2-B, 2A1-A, 2A2-A, 2B1-B, and 2B2-B

Reference: Figure 1.2.3-3.

Each of these boards is located in a separate room in the auxiliary building at elevation 734.0. The isolating walls of these rooms are constructed of reinforced concrete blocks extending to the ceiling. Boards 1A1-A, 1B1-B, 2A1-A, and 2B1-B are in individual rooms. Boards 1A2-A, 1B2-B, 2A2-A, and 2B2-B are in rooms which also contain the control/auxiliary building vent boards. All boards in common rooms have a common unit power train relationship.

480-Volt Reactor MOV Boards 1A1-A, 1A2-A, 1B1-B, 1B2-B, 2A1-A, 2A2-A, 2B1-B, and 2B2-B

Reference: Figure 1.2.3-2.

These boards are located in the auxiliary building at elevation 749.0. They are located in separate rooms on a unit and train basis and are located in the same room as the reactor vent boards associated with the same unit and train. The 480-volt auxiliary building common board is in the room with MOV boards 1A1-A and 1A2-A. The isolating walls of these rooms are constructed of reinforced concrete blocks extended to the ceiling.

480-Volt Reactor Vent Boards 1A-A, 1B-B, 2A-A, and 2B-B

These boards are located in the rooms with the 480-Volt reactor MOV boards described above.

480-Volt Control/Auxiliary Building Vent Boards 1A1-A, 1A2-A, 1B1-B, 1B2-B, 2A1-A, 2A2-A, 2B1-B, and 2B2-B

These boards are located in the rooms with the 480-Volt shutdown boards described above.

480-Volt Diesel Auxiliary Boards 1A1-A, 1A2-A, 1B1-B, 1B2-B, 2A1-A, 2A2-A, 2B1-B, and 2B2-B

Reference: Figure 1.2.3-17.

These boards are located in the diesel generator building at elevation 740.5. They are located in separate rooms on a unit and train basis. The isolating walls of the rooms are reinforced, poured-in-place concrete.

6900-480-Volt Pressurizer Heater Transformers 1A-A, 1B-B, 1C, 1D, 2A-A, 2B-B, 2C, and 2D

Reference: Figure 1.2.3-2.

These transformers are located in the auxiliary building at elevation 759.0. Transformers 1A-A, 2A-A, 2D, and 1D are located in one room in the unit 1 area. Transformers 1B-B, 2B-B, 2C, and 1C are located in one room in the unit 2 area.

480 Volt ERCW Transformers and MCCs 1A-A, 1B-B, 2A-A, and 2B-B

Reference: Figure 1.2.3-14

These components are located in the ERCW Pumping Station at elevation 704. Transformers 1B-B and 2B-B and MCC's 1B-B and 2B-B are in one room. Transformer 1A-A and MCC 1A-A are located in a Unit 1 room. Transformer 2A-A and MCC 2A-A are located in a separate Unit 2 room.

System Operation

The 6.9-kV shutdown boards in each power train derive power from separate 6.9-kV unit boards or from their respective standby power source (diesel generator). The unit board power sources are discussed in section 8.2. During conditions where preferred (offsite) power is not available, each 6.9-kV shutdown board is energized from a separate standby diesel generator.

The alignment of each unit's standby distribution system is determined by plant conditions, the sources selected to energize it, and the status of components within the distribution system.

A loss of voltage ($\leq$ 80%) on the 6.9-kV shutdown board bus is detected by a two-out-of-three logic with a definite time delay, followed by trip of the normal and alternate feeder breaker, start the diesel generator, and trips major 6900V and 480V shutdown board loads (see Table 8.3.1-1). The transfer from normal to alternate and return to normal is initiated manually and is a high-speed transfer, completed in approximately six cycles or less. These transfer schemes are in Table 8.2.1-1.

Table 8.3.1-1 shows the loads that are automatically stripped. Figure 8.3.1-10 shows typical load stripping schematically. The generator will be automatically connected to the 6.9-kV shutdown board bus. This return of voltage to the 6.9-kV shutdown bus initiates logic which connects the required loads in sequence. Table 8.3.1-2 shows the order of applied major loads. The standby (onsite) power system's automatic sequencing logic is designed to automatically connect the required loads in proper sequence should the logic receive an accident signal concurrent with a loss of all offsite power.

To protect the Class 1E buses from a sustained degraded undervoltage, each of the two 6.9-kV Class 1E buses per unit is provided with a set of three instantaneous solid-state undervoltage relays. These relays have a nominal setpoint of 6456V (93.5 percent of nominal). The relays are arranged in a two-out-of-three coincidence logic to initiate three simultaneous time delay sequences.

(1) A time delay of 9.5 seconds is short enough to allow safety-related equipment to be powered within the time required by the safety analysis. At the end of 9.5 seconds if a SI signal has been initiated, or is subsequently initiated, the logic will trip the normal and alternate feeder breaker, start the diesel generator, and trips major 6900V and 480V shutdown board loads (see Table 8.3.1-1).
(2) A time delay of 30 seconds will ride through normal system voltage transients before annunciating the undervoltage in the main control room.
(3) A time delay of five minutes is long enough to allow operator action but not allow damage to connected safety-related equipment. At the end of five minutes, the logic will trip the normal and alternate feeder breaker, start the diesel generator and trips major 6900V and 480V shutdown board loads (see Table 8.3.1-1) if the voltage has not returned to normal.

To protect the Class 1E buses from a sustained overvoltage, each of the two 6.9-kV Class 1E buses per unit will be provided with a set of three instantaneous solid-state overvoltage relays. These relays are arranged in a one-out-of-three coincidence logic which will annunciate in the control room. The relays have a nominal voltage setpoint of 7260 volts (105 percent of nominal). The operator can take the action necessary to reduce the voltage.

To protect the Class 1E buses from a sustained degraded unbalanced voltage, the 1A-A, 1B-B, 2A-A, and 2B-B 6.9-kV Class 1E buses are provided with a set of three solid state phase unbalance relays (negative-sequence overvoltage relays). These relays are arranged in a permissive one-out-of-two coincidence logic where the alarm relay provides the permissive function with either the low or high trip relay providing the trip function. Each relay has a separate voltage setpoint and time delay. Unlike the other undervoltage protection, the setpoint is a comparison of each of the phases rather than a percentage of bus nominal voltage.

(1) The alarm relay alerts the main control room of an abnormal unbalanced voltage level and is needed to protect against equipment “loss-of-life” or long term motor degradation. Alarm nominal voltage setpoint is 1.30V with a time delay of 2.95s to ride through normal system unbalanced voltage transients before annunciating the unbalanced voltage in the main control room.
(2) The low trip relay protects against loss of safety function for the connected Class 1E loads. Low trip nominal voltage setpoint is 2.96V with a time delay of 9.95s, which is short enough to allow safety-related equipment to be powered within the time required by the safety analysis.
(3) The high trip relay protects against loss of safety function for the connected Class 1E loads. This relay provides a faster tripping time for a high level negative sequence/unbalanced voltage. High trip nominal voltage setpoint is 18.13V and a time delay of 3.95s, which is short enough to ensure safety-related equipment protective devices do not actuate for starting and running conditions.

Once the permissive one-out-of-two coincidence logic is satisfied, the existing degraded voltage/loss of voltage logic will trip the normal and alternate feeder breaker, start the diesel generator, and trips major 6900V and 480V shutdown board loads. (See Table 8.3.1-1)

There are no automatic transfers of board supplies between redundant power sources. All 480V shutdown boards and all motor control centers have normal and alternate feeders. Transfers between the normal and alternate feeder are manual. Some manual transfers of loads between power trains are used. These transfers are at the 480V level and involve eight loads which are tabulated in Table 8.3.1-3.

A means of manually interconnecting power sources at the 6.9-kV level is provided. This is provided by the shutdown utility bus, shown on Figure 8.1.2-1, which allows any 6.9-kV shutdown board to be connected to any other or all other 6.9-kV shutdown boards. All circuit breakers connected to this bus are normally open and disconnected (racked out). Use of the bus requires manual insertion and closing of two of the breakers. The purpose of this utility bus is to increase the flexibility of the Standby Power System under levels of degradation beyond consideration of the single failure criteria.

A manual means of supplying power to the 480V auxiliary building common board (which is not normally supplied power from the diesel generators during a condition where offsite power is lost) is provided. Provisions have been made to manually connect this board to the 480V shutdown boards 1B2-B and 2B2-B. This is shown in Figure 8.3.1-11. The purpose is to provide power to operate the ice condenser refrigeration units and glycol pumps during the unlikely condition of a loss of offsite power that exceeds 2-3 days. Also provide power to the Auxiliary Building 125 Ton Crane if needed for Dry Cask Storage operation. The two normal bus feeder breakers must be moved from their normal compartments to the compartments which are connected to the 480V shutdown boards 1B2-B and 2B2-B.

System Instrumentation

Remote instrumentation of the 6.9-kV shutdown boards consist of transducer-driven ammeters for the normal and alternate feeders, diesel generator feeder, and all motor loads. Also included are bus voltmeters and various annunciations which are located in the main control room and auxiliary control station. This is shown on Figure 8.3.1-9. The diesel generator instrumentation is covered in the diesel generator section. This instrumentation is used in testing the diesel generator and in monitoring the 6.9-kV shutdown boards during normal conditions and loss of offsite power conditions.

Remote instrumentation of the 480-volt shutdown boards consists of bus voltmeters and various annunciations all of which are located in the main control room and auxiliary control station. This is shown in Figures 8.3.1-7 and 8.3.1-8. All the boards have locally-mounted ammeters which monitor the normal and alternate feeders.

Remote instrumentation of the 480-volt motor control centers consists of annunciation in the main and auxiliary control rooms upon loss of board voltage.

System Reliability

The redundant power trains shown in Table 8.3.1-4 and Figure 8.1.2-1, have redundant loads connected to corresponding distribution boards in each train such that failure of any one component or the entire train will not prevent the redundant system from performing the required safety function. The equipment requiring ac power during a loss of offsite power and/or accident condition is supplied from the 6.9-kV shutdown board directly or indirectly through transformers at a lower voltage as shown on Figure 8.3.1-6. At the 480-volt level each power train has two 480-volt shutdown boards and one ERCW board. A single spare transformer is provided for the two normal shutdown board transformers and is manually placed in service when one of the normal transformers is taken out of service.

Each 480-volt shutdown board supplies power to a group of motor control centers in addition to the large 480-volt motor loads. A motor control center is normally fed from one of the 480-volt shutdown boards and has an alternate feed from the other shutdown board of the same power train. Manual selection between the normal and alternate feeders is made at the motor control center.

The pressurizer heaters are divided into four groups. Two groups are supplied from each redundant power train 6.9-kV shutdown board through individual transformers. This is shown on Figure 8.3.1-6.

The four diesel generator sets are physically separated, electrically isolated from each other, and protected from the maximum possible flood.

Equipment Identification

Redundant major electrical equipment carries the same name in each power train with the exception that the board designation also has either -A or -B suffix depending upon the power train assignment. For example, 6.9-kV shutdown board 1A-A and 6.9-kV shutdown board 1B-B are redundant to each other. Similar designations are used for safety-related loads being supplied from safety-related (onsite) boards. For example, RHR (Residual Heat Removal) pump 1A-A and RHR pump 1B-B are redundant to each other. Further description of the equipment identification scheme used appears in paragraph 8.3.1.5.

Equipment Capacities

Tables 8.3.1-5 through 8.3.1-8 present the bus rating and the modes for maximum demand for each electrical distribution board in the standby power system. The maximum demand load for each major transformer in the standby power system is given in Table 8.3.1-9. The maximum demand load for the standby power system is within the equipment ratings and capabilities. The continuous rating of each unit is 4400 kw and 5000 kva at $\geq$ 0.8 power factor, 6.9-kv, 3-ph, and 60 Hz. Each diesel generator unit also has a short-time overload rating of 4840 kw for 2 hours in any 24 hour period.

The engine also has a "maximum brake horse power capability" which represents the maximum instantaneous real power that can be delivered, and therefore, determines the maximum amount of electrical load that can be started by the DG set. This capability depends on turbo-charger output and is therefore reduced during the first 3 minutes of operation. The maximum brake horse power capability is 4785 kW for the first 3 minutes and 5073 kW after 3 minutes.

The adequacy of the standby AC Power System is discussed in subparagraph 8.3.1.2.1.

System Controls

Figure 8.1.2-2 shows the vital 125V DC control power sources for each onsite shutdown board. Each board has a normal and emergency control bus, with each bus having access to two 125V batteries (having the same power train separation) by way of a manual transfer switch located in the board. The normal control bus supplies power for main control room operation. The emergency control bus supplies power for auxiliary control station operating modes. This is shown on Figure 8.3.1-6.

The control power for onsite motor control centers is single phase 120V AC supplied either from the center's own bus through a 480-120V transformer or from each individual load feeder through a 480-120V transformer.

System Testing

Located adjacent to each 6.9-kV shutdown board is a test panel equipped with the necessary selector switches, pushbutton switches, and indicating lights for testing the automatic load stripping and load sequencing logic for that particular power train. The tests are to be performed on only one of the two power trains per unit at any one time. Testing of one power train does not prevent the remaining power train from performing its intended safety function.

Testing of the onsite power distribution system is discussed in compliance to Criterion 18 of section 3.1.2.

Figure 8.3.1-10 show a schematic representation of the ability to test groups as described above.

Standby Diesel Generator Operation

The diesel generator system is shown on single line diagram, Figure 8.3.1-9. The schematic of the engine control circuits is shown in Figures 8.3.1-1 through 8.3.1-5. Remote control of the engine from the main control room is accomplished through interposing relays located in the diesel building.

The automatic connection of the diesel generators to the 6.9-kV shutdown boards is initiated by either the loss-of-voltage relays, the degraded voltage relays, or the unbalanced voltage relays on the 6.9 kV bus. For a complete description of the voltage relay logic and settings, see the system description of this section. When the diesel generator set has reached a speed of 850 rpm and design minimum voltage of 96.8 percent of nominal, it is automatically connected to the 6.9-kV shutdown board bus. The return of voltage to the 6.9-kV shutdown board initiates logic which connects the required loads in the proper sequence. Table 8.3.1-2 shows the order in which the loads are applied.

The loss-of-voltage/degraded voltage/unbalanced voltage relays remain in the circuit at all times, regardless of the power feed (normal, alternate, or emergency) to the 6.9-kV Shutdown Board. If the loss-of-voltage/degraded voltage/unbalanced voltage relays' voltage setpoint is reached, the proper operation includes:

1. Annunicate the 6.9-kV SD BD Failure or UV condition.
2. Initiate a DG emergency start signal and enable ERCW valve alignment.
3. To shed loads to be within the diesel generator capacity when the diesel generator automatically connects to the board.*
4. Allow the diesel generator to reach/recover speed and voltage.*

5. Reconnect the loads in the proper sequence.*

*If the board is being supplied from the Emergency Diesel Generator, an installed interlock circuit will prevent actions 3, 4, and 5 if the Diesel Generator output voltage is greater than 70% of nominal. This will prevent unnecessary load shedding during expected voltage transients during diesel loading.

Since the load shedding relays recognize loss of voltage, the design ensures that the starting of the large sequenced loads will not cause actuation of the load shedding feature.

As shown in Table 8.3.1-2, there are two loading sequences. One, which is applied in the absence of a safety injection signal (SIS), "the nonaccident condition," and the other "accident condition," applied when a SIS (and containment spray actuation signal) is received coincident with a sustained loss of voltage on the 6.9-kV shutdown board. A SIS received during the course of a nonaccident shutdown loading sequence is not part of the design basis of the plant (Reference TVA letter to NRC [RIMS L44870312803]). However, the design logic will cause the actions described below:

1. Loads already sequentially connected which are not required for an accident will be disconnected (except fire pumps powered by the DG).

2. Loads already sequentially connected which are required for an accident will remain connected.

3. Loads awaiting sequential loading that are not required for an accident will not be connected.

4. Loads awaiting sequential loading that are required for an accident will have their sequential timers reset to time zero from which they will then be sequentially loaded.

A SIS received in the absence of a sustained loss of voltage on a 6.9-kV shutdown board will start the diesel generators but not connect them to the shutdown boards. There are no automatic transfers of shutdown boards between standby power supplies in compliance with Regulatory Guide 1.6 Rev. 0. The events which initiate a safety injection signal are discussed in Chapter 7.

The diesel can be started by manually operated emergency start switches located in the main control room and auxiliary control room. Automatic starting is from an accident signal or loss of offsite power. All automatic and manual emergency start signals operate to deenergize a normally energized circuit. Emergency start signals operate a lockout relay that removes all manually operated stop signals except emergency stop and all protective relaying on the generator except generator differential, unless the diesel is operating in the exercise mode (generating power parallel to the offsite power grid). The lockout relay must be manually reset at the diesel generator relay panel in the diesel building. A local idle start switch is provided to start and run the engine at idle speed for durations of unloaded operation. During this type operation any emergency start signal will cause the engine to go to full speed and complete the emergency start. The engine also has a local manual start switch as well as remote start from the main control room for test purposes.

In general, after starting, the diesel generators will continue to run until manually shutdown. However, there are protective devices installed to shutdown a diesel generator automatically to prevent heavy damage in the event of a system malfunction. These protective devices are listed below.

Protective devices marked with an asterisk (*) are operative at all times while the others are operative only during the exercise mode of operation. These devices must be manually reset before the engine can be restarted. Protective devices (voltage restrained overcurrent relay, crankcase pressure switch, and overcurrent relay) are for alarm only and do not trip the diesel generator.

The status and operability of the trip bypass circuits can be tested and abnormal values of all bypass parameters are alarmed in the control room.

<u>Generator</u>

Instantaneous overcurrent relay (trip generator breaker only)
phase balance relay
reverse power relay
generator differential relay (*)
loss of field relay

<u>Engine</u>

overspeed switch(*)
low lube oil pressure switch
high water jacket temperature switch

There will never be more than one diesel in the exercise mode (diesel connected parallel to offsite power grid) at a given time. The DG response for a LOOP or an accident signal while in the exercise mode is discussed in DG operational testing. One out of the four diesel-generator sets may be stopped by its protective devices without jeopardizing the safe shutdown of a unit during all postulated design basis events; therefore, the protective devices will prevent excessive damage to a diesel generator set.

The diesel can be stopped by manually operated emergency stop switches located in the main control room, auxiliary control room, and on the diesel control panel in the diesel building. A manual stop switch is provided in the main control room for stopping the engine under normal conditions such as conclusion of a test or upon return to the preferred power source. Under accident or loss of offsite power conditions this stop switch is automatically disconnected from the stop circuit. The normal stopping of the engine will position the electric governor at idle speed (approximately 400 RPM) and allows the engine to run for 10 minutes before bringing the engine to zero speed. Emergency stopping bypasses this 10 minute idle speed time and brings the engine directly to zero speed. Should an emergency start signal be initiated during the 10 minute idle speed time of a normal stop condition, the engine will automatically return to synchronous speed and emergency operation.

Diesel engine speed and generator voltage can be manually controlled remotely from the main control room during exercise operations. An emergency start signal will automatically disconnect these manual controls and returns the unit to automatic control provided the diesel is not in the exercise mode of operation.

A "Local-Remote" manual selector switch, located in the diesel building, must be in the "Remote" position for all manual remote control from the control room to be in effect, with the exception of emergency start. Similarly, for the manual controls located in the diesel building to be in effect the switch must be in the "Local" position with the exception of emergency stop. Switching to the “Local” position requires an electrical permissive interlock signal initiated from the main control room. These operations are shown in Figure 8.3.1-9.

Diesel Generator Description

Each diesel-generator set is furnished by Power Systems Division of Morrison-Knudson Co., and consists of two 16-cylinder engines (model 999-16, type 16-645E4) connected directly to a 6.9-kV, 3-phase, and 60 Hz generator.

The normal operating speed of the set is 900 RPM. The diesel-generator set uses a tandem arrangement; that is, each set consists of two diesel engines with a generator between them, connected together to form a common shaft.

Governor Control of the Diesel-Generator Sets

The governor consists of the following:

(a) Woodward EGB-13P actuator on each engine
(b) 2301A controller (reverse biased)
(c) Magnetic speed pickup

The Woodward EGB-13P actuator used with the 2301A controller is a proportional governor which moves the fuel rack in inverse proportion to the voltage signal from the controller. Based upon the input from the generator, the controller sends an electric signal to the governor actuators on the two engines. This signal goes to the coils of each actuator that are connected in series so that each coil sees the same electric signal. The terminal shaft of each actuator will move the same amount for each change in signal. This means that the fuel control shaft movement on each engine will also be the same.

Attached to the fuel control shaft through an appropriate linkage is an injector rack for each cylinder which by its position meters the fuel injected into its cylinder. This rack is set with a standard factory gauge so that each cylinder will receive the same amount of fuel. Each injector rack is spring loaded to prevent any single injector that may stick from affecting the remaining racks on that engine.

The mechanical governor is set as backup control for unit speed such that at full droop (100% load) there is margin above the 900 rpm of the electrical governor. Since the electrical system is reverse biased, a failure in the electrical system would cause the engine speed to increase until it reached the setpoint of the mechanical governor and at that point the mechanical governor would control the engine.

Diesel Generator Auxiliaries

The diesel generator auxiliaries are supplied power from the diesel 480V Diesel Auxiliary Boards located in the diesel building on EL 740.5 (see Figure 1.2.3-17). These boards and loads are shown on Figures 8.3.1-12 and 8.3.1-13.

Diesel Fuel Oil System

The Diesel Engine Fuel Oil System for each unit consists of a day tank for each engine of the tandem pair holding approximately 550 gallons of fuel and four tanks embedded in the diesel building foundation floor which hold a minimum of a seven day supply. Transfer of fuel between the seven day supply tanks and the engine day tanks is accomplished automatically by a pair of pumps controlled by float-operated switches which sense fuel level in the engine day tanks. Either of the pumps can be selected as the lead pump with the other pump serving as a backup or supplementary pump (see Figure 8.3.1-14). Transfer of fuel from outside the diesel building to the seven day storage tanks is accomplished by manually controlled pumps which can supply fuel from two large storage tanks located near the storage yard or truck tanker piping connection. All of these transfer pump motors are supplied power from 480V diesel auxiliary boards. The fuel storage system that supplies the day tanks is described in Subsection 9.5.4.

Diesel Cooling System

Cooling water for engine heat removal is supplied from the Essential Raw Cooling Water System by way of two motor-operated valves piped in parallel to redundant cooling water heaters. One valve (that supplies ERCW from the train associated with that EDG) opens automatically upon receipt of a speed switch signal indicating that the engine is at 40 rpm or greater. All signals to close these valves must be manually initiated (Figure 8.3.1-15).

The detailed description of the cooling system for a diesel engine is given in Subsection 9.5.5.

Diesel Air Starting System

The actual cranking power to the engine is by compressed air motors which mechanically engage with the flywheel teeth and turn the engine drive shaft.

Four pairs of air motors are provided on each of the generator sets (total of eight air motors per diesel-generator) for cranking power. The air motors are paired (two pairs per engine) with two pairs on either engine or one pair diagonally opposed on each engine as a minimum to provide sufficient cranking power. Under normal conditions, all eight air motors are used to crank the tandem engines. A speed switch is used to shut off the compressed air to the motors when the engines reach a speed of 200 rpm.

The Diesel Generator Air Starting System is further described in Subsection 9.5.6.

Diesel Servicing

A maintenance switch at each diesel-generator set is provided that disables the remote starting equipment while the set is being serviced. A contact of this switch actuates an annunciator in the main control room when the switch is not in the automatic start position. There is no override of the maintenance switch since a start-up could be hazardous to the personnel working on the engines. The switch in no way affects the integrity of the other three diesels, which will still start upon receiving an accident signal.

Diesel Generator Lubrication System

Each diesel engine has a lube oil circulating pump and water heater for use while the engine is not running. The oil is continuously circulated and held at a relatively constant temperature while the engine is stopped in anticipation of a required fast start (see Figure 8.3.1-16). A complete description of the Diesel Generator Lubrication System is given in Subsection 9.5.7.

Diesel Generator Instrumentation

Instrumentation consists of voltmeters, wattmeters, varmeters, ammeters, and annunciation display panels located in the main control room, auxiliary control room, and locally in the diesel building. The instrumentation is not essential for automatic operation of the diesel.

Diesel Generator Control Power (Reference 3)

The control circuit voltage for the diesel generators is 125-V dc (nominal). Indicating lights and contacts for the 125-V dc service show when the diesel generator is: (1) ready for automatic start but not running, (2) cranking, or (3) running. In addition, there is an alarm in the MCR when the 125-V system is unavailable (breaker open). During emergency operation of the diesel generator, the only required source of control power is a battery, which has 58 cells. The battery is operable with 57 cells if one cell is strapped out. During nonemergency operation, power supplies for manual control of the diesel generator are provided by vital power sources 125-V dc and 120-V ac. Per the vendor (see Reference 2), after a discharge, when the float current drops to less than or equal to 1 amp, the battery should be at least 98% recharged. A 98% charged battery maintains at least a 5% design margin.

The DG supplier, MKW Power Systems, Inc., maintains the design basis for the capability of the control power system to start the DG during design basis events. Except for the first few seconds in the duty cycle, the battery, with the charger not operable, is capable of supplying all the loads without dropping below the minimum battery voltage of 105 V, for 30 minutes when the battery is at the lowest expected temperature of 60° F and at the "end-of-life" condition (80% capacity). Further, TVA has performed an independent analysis of the DG battery that supports the conclusions provided by MKW. The DG battery, due to motor transients, will momentarily drop below 105 V during the first 10 seconds of the duty cycle. However, all components will have adequate voltage to support the safety function.

Each battery has an independent dual battery charger which are supplied from the Class 1E 480-V diesel auxiliary boards. The battery charger is of the static rectifier type and is equipped with a contact to annunciate via the diesel generator engine control panel of a low direct current voltage output.

Limiting the frequency of battery discharge tests help maintain the life of the batteries. A minimum float voltage provided by the manufacturer is a battery bank setpoint corresponding to 2.20 volts per cell but an allowable voltage of 2.13 volts per cell is also provided. Since cells below the minimum setpoint but above the allowable are recommended to be equalized, 2.20 volts per cell is recognized as the minimum to support long term performance.

Battery capacity is available at the battery's end of qualified life and with the cell electrolyte at the minimum design temperature of 60° F. The manufacturer's ratings adjusted for minimum design cell temperature and battery end-of-life per guidance in IEEE Standard 485 is the basis for sizing the battery. The batteries are tested per IEEE-450-2002 and the results compared to the vendor capacity ratings.

The batteries have two electrolyte level marks (High and low) on the battery casing. The battery manufacturer’s reference point for electrolyte level is the high level line; however, the electrolyte level is considered satisfactory as long as it is at, or above, the low level line and is no more than 1/4 inch above the high level line. Site procedures specify criteria for the minimum electrolyte levels required for battery operability.

Diesel Generator Capacity

DG capacity (quantitative) is given under equipment capability in 8.3.1.1. The present diesel generator loading analysis calculation determines the loading (KW and KVA) on each of the diesels for the following design basis events: (1) loss of offsite power (LOOP), (2) LOOP with simultaneous safety injection signal (SI) and containment isolation Phase A, and (3) LOOP with simultaneous SI and containment isolation Phase B. This analysis confirms that the DGs are capable of supporting two-unit operation while maintaining margin between the maximum transient/steady state loading and the DG manufacturer's ratings and capability. For manual addition of DG loads, administrative control requires the operator to maintain the DG load within the engine rating.

Diesel Generator Operational Testing

The operational testing of the diesel generator is accomplished from the diesel control panel located in the main control room. Full load tests on a DG require that the DG be paralleled with the offsite power in a manual (exercise) mode of operation. Should a loss of offsite power occur under this condition the instantaneous overcurrent relays may trip the diesel generator circuit breaker and reset the governor and voltage regulator for automatic operation. The automatic sequencing logic will then reapply the diesel generator and the required loads to the standby power boards. If an accident signal is received while the diesel is operating in the exercise mode, the diesel may remain in the exercise mode (with all the protective devices operable) and continue to provide power. If the DG does not trip (due to the light loading), it must be manually unloaded and tripped to go to the emergency mode. Diesel Generator tests verify that the critical protective trips that are not automatically bypassed perform their intended function (Reference 3).

Diesel Generator Maintenance

Diesel Generators are inspected in accordance with procedures prepared in conjunction with manufacturer’s recommendations for this class of standby service.

Qualification Testing of the Tandem Diesel Configuration

The vendor (Bruce General Motors) performed factory tests designed to demonstrate that the systems would perform the requirements of fast starting, sequential motor starting, load sharing, and continuous load carrying capability. Additional systems tests were also conducted to demonstrate the recovery capability from a sudden application of load, a sudden loss of load, and the sudden loss of a unit.

In addition to the customary test performed to check the operability of the unit, the following tests were conducted on each unit:

Fuel Consumption Tests

The unit was loaded at loads of 1330, 2660, and 4000 kW at 0.8 pf, and the time to consume 100 pounds of fuel was recorded. This series of tests was done three times, and the time to consume 100 pounds of fuel varied from approximately 5 minutes, 52 seconds at 1330 kW, to 2 minutes, 56 seconds at 4000 kW.

Transient Tests

Full load transient tests were made to verify that voltage and frequency transient characteristics of the system. Loads of 1000, 2000, 3000, and 4000 kW at 0.8 pf were picked up and dropped three times. The data in the following table is from the test report on unit D and was considered to be typical.

Load Change	Peak Frequency Change %	Peak Voltage Change %
+1000 kW	- .37	- 7
-1000 kW	+.5	+ 3.5
+2000 kW	- 1	- 7.2
-2000 kW	+1.33	+ 7
+3000 kW	- 1.5	- 13.3
-3000 kW	+1.83	+10.5
+4000 kW	- 2.3	- 15.8
-4000 kW	+2.5	+ 14

In all tests, the systems restored the voltage and frequency to nominal values within 5 seconds. The maximum percent voltage dip due to a 1000-kW step increase in load is shown below for each unit.

Unit A - 9.5 percent
Unit B - 9.2 percent
Unit C - 7.8 percent
Unit D - 7 percent

72 Hour Tests

The units were tested at rated voltage, rated frequency at a load of 4000 kW, 0.8 pf for 72 hours with engine and generator readings being recorded every half hour.

Starting Reliability Tests

To demonstrate their starting reliability each diesel-generator unit was started 100 consecutive times without a failure. Rated speed was obtained within 8 seconds after each start.

During these starting reliability tests, full load was applied within 30 seconds for five minutes on the first start and every tenth start thereafter for a total of ten out of the one hundred.

During the entire testing period for each diesel-generator set, over 200 starts were made with no failure to start and attain rated speed and voltage.

In addition to the above further testing to verify the starting reliability has been done for the Watts Bar generators, which are similar in design to the Sequoyah generators. During this testing 306 successful test cycles were completed on the Watts Bar diesel generators without any failures. During these tests, the diesel generators were started from cold standby conditions, loaded to at least 50 percent of the 30-minute rating within 15 seconds of the start signal, and operated for a period of approximately 15 minutes until the operating temperatures stabilized. Summaries of the results of the start reliability tests are provided in a three volume compilation: 300 Start Reliability Tests Volume 1; Void Report volume 2; and Strip Charts for 306 Starts, Volume 3. These three volumes have been sent to the NRC via letter from J. E. Gilleland to B. C. Rusche dated December 30, 1975.

Onsite Design Verification and Performance Testing

During the late 1980's, the DGs were subjected to a significant on-site testing program in order to resolve many potential issues raised by NRC, TVAN employee concerns, and public concerns. These concerns generally involved allegations that the DGs were overloaded, that load additions were not properly controlled, and that frequency and voltage recovery did not meet the original licensing basis. These issues and their resolution are summarized in the Sequoyah Nuclear Plant Diesel Generator Evaluation Report (DGER)[1] and NRC Revised Safety Evaluation Report[2]. The DGER concludes that TVAN has demonstrated by testing and analysis that the SQN DG system will perform its intended safety function, with acceptable margin. Following issuance and NRC acceptance of the DGER, further improvements were made to the DG transient-voltage response in accordance with the Improvement Plan for SQN SG Transient Voltage Response[3], which successfully improved the voltage performance of the DGs beyond what had been previously analyzed in the DGER[4].

[1]Letter from R. Gridley to U.S. NRC dated February 29, 1988 (RIMS L44 880229 804)
[2]Letter from Stewart D. Ebneter to S. A. White dated March 25, 1988 - Docket Nos. 50-327 and 50-328
[3]SQN Improvement Plan for SQN Diesel Generator Transient Voltage Response (RIMS L44 880708 802)
[4]SQN Diesel Generator Voltage Response Improvement Report (RIMS B25 891127 005)

Station Blackout Diesel-Generator Reliability

The SQN electrical distribution system configuration, SQN site weather data, distribution grid system stability, and other factors were evaluated per NRC Regulatory Guide 1.155 "Station Blackout" and the required overall diesel-generator reliability must be maintained over 0.975 as a target.

VITAL 120V AC CONTROL POWER SYSTEM

The vital 120-volt AC control power system is a Class 1E, safety-related system which provides instrumentation and control power for engineered safety features equipment and other essential AC powered equipment. The system capacity is sufficient to supply these loads during normal operation and to permit safe shutdown and isolation of the reactor in any emergency, including a LOOP condition. Limited shutdown capabilities are maintained for a loss of all AC power condition. Distribution of power is accomplished without automatic transfers between redundant load groups and without automatic load stripping or sequencing. The system is designed to perform its safety function subject to any single failure within the system.

Although there is no automatic load stripping, certain loads are removed from the Vital AC Power Boards within 45 minutes into a Station Blackout event as defined in Regulatory Guide 1.155. The loads that are removed are those that are not required for mitigation of a four hour Station Blackout event. The loads are removed to reduce the battery loading in order to meet the four hour requirement. The station blackout event is assumed to occur during normal plant operation with both units at power, but no accident or other operational transient. The plant is required to be maintained at hot standby during the four hour event with appropriate containment integrity. Sufficient instrumentation is powered during the event to monitor the core conditions and reactor coolant system pressures and temperatures.

System Structure

The configuration of the AC control power system for both nuclear units is shown in Figure 8.1.2-2. Each unit has four identical power Channels, with the equipment of each channel being electrically and physically independent from the equipment of other channels. Each channel consists of an inverter and a distribution panel which facilitates load grouping and provides circuit protection and a spare inverter shared between the units.

Physical Arrangement of Components

The inverters are located in the auxiliary building at elevation 749. The Channels I and II inverters are located in the Unit 1 area and the Channels III and IV inverters are located in the Unit 2 area. The Channels I and II inverters are separated from Channels III and IV inverters by reinforced concrete block wall, extending to the ceiling. The Channel I and the Channel III inverters are separated from the Channel II and the Channel IV inverters respectively, by a distance of about 60 feet. The physical arrangement of the inverters is shown on Figure 1.2.3-2.

System Reliability

The system incorporates features which serve to increase the overall reliability. Each channel has access to three power sources; a 480-volt AC source, a 125-volt DC source, and a 120-volt AC regulated bypass source. Each inverter has an auctioneered solid-state transfer switch between the 480-volt AC and 125-volt DC sources. A static switch is provided for each inverter to automatically transfer between the inverter output and the regulated bypass source in the event of overload or system malfunction without interrupting power to the load. An automatically synchronized manual transfer between the output of the inverter and the spare inverter is provided so that the inverter may be taken out of service for maintenance without interrupting power to the loads. The current limiting feature of the inverter provides self-protection from load faults. The inverter and instrumentation power board are monitored to alert the operator of abnormalities. The distribution bus is sectionalized with coordinated fuses to prevent losing the entire board due to a single branch circuit fault.

Vital 120VAC Loads

Each channel supplies the following types of loads: reactor protection system, reactor systems instrumentation, separations and interlock relay panels, and other panels and equipment associated with reactor instrumentation and control systems. The capability of the inverter to supply its connected load is discussed in Paragraph 8.3.1.2. Nonsafety related loads are supplied from Class 1E breakers located on the Class 1E instrument power board to provide qualified fault isolation.

Loads are assigned to a channel according to its separation division requirement. Those loads requiring four divisions of separation are assigned to the four channels. Those loads requiring two divisions of separation are assigned to Channels I or III and II or IV. Loads which do not require divisional separation are assigned among the four channels of each unit.

In all documents pertaining to Class 1E systems, the method of distinguishing between safety related and nonsafety related loads are clearly defined on the documents.

Inverter

The normal supply of ac power to the distribution panels is from the inverter in each channel. The inverters consist of four major subassemblies: a DC power supply, an auctioneering circuit, an inverter circuit and a static switch. The spare inverters consist of a DC power supply, an auctioneering circuit, and an inverter circuit but do not have a static switch. The DC power supply converts the 480-volt AC normal inverter input to direct current. The auctioneering circuit accepts the DC power supply (normal supply) and battery (emergency supply) inputs and permits a switchless bidirectional transfer between them in the event of 480-volt AC supply failure and restoration. The DC output of the auctioneering circuit is converted to ac by the inverting circuit. The static switch automatically transfers the load between the inverter circuit output and a regulated bypass source upon overload or system malfunction without interrupting of power to the load.

The inverter is a solid-state type which converts three-phase 480-volt AC and 125-volt DC inputs to a nominal 120-volt AC output having a rated capacity of 167 amperes for load power factors from 0.8 to 1.0. Over this output current range, the AC output voltage does not vary more than ± 2.0 percent for normal 480-volt AC supply voltage amplitude variations of +10/-12.5 percent and frequency variations of ± 2.0 percent, and an emergency supply voltage variation from 100 to 140 volts DC. The output frequency regulation is 60 Hz ± 1.0 percent with a harmonic distortion of 5 percent and a maximum rate of change of 1.0 Hz per second. When operating from the emergency supply, the inverter efficiency is proportional to the load.

Some operational features of the inverters are: (1) synchronization to a 120-volt AC bypass source, (2) a current-limit feature which helps prevent commutation failure and limits overload current to a safe value while permitting a 334 ampere short circuit current for a minimum of 1.5 seconds, (3) protective devices which prevent a failed inverter from loading its associated normal and emergency power sources, and (4) metering and alarm circuits to monitor the inverter output.

Vital Instrument Power Board

The eight instrument power boards are located in four separate rooms in the auxiliary building at elevation 734. The two boards and the 125-volt DC Vital Battery Board serving the same channel are located in the same room. Although the two instrument power boards serving the same channel are electrically separated, they are physically constructed side by side.

Mounted on each of these boards are: the distribution bus, maintenance supply transfer switch, subdistribution bus 70-ampere fuses, distribution bus disconnect switch, high speed branch circuit breakers, and various instruments (a panel-mounted voltmeter and an undervoltage relay to warn the operator of a loss of distribution panel power) for monitoring distribution bus AC voltage.

In addition, mounted on boards 1-III and 1-IV is equipment for supplying the CO_2 fire protection system with a source of ungrounded ac power.

Each branch circuit breaker is coordinated to its subdistribution bus fuse. The purpose of this coordination scheme is to prevent a fault on one branch feeder from causing damage to any branch feeder cable or a loss of the entire board due to a single branch feeder fault. All of the branch circuit breakers are 100-ampere frame molded-case breakers. All circuit breakers have alarm contacts to alert the control room operator of an open breaker.

Tests and Inspections

Prior to placing the vital AC system in operation, the system components will be tested to ensure their proper operation. The inverter will be checked for output voltage and frequency, ability to synchronize to the maintenance supply, transfer between normal and emergency sources, and 100 percent output delivery while operating on either the normal or emergency supplies. Panel-mounted instruments monitoring the inverter will be calibrated. For the instrument power board, circuit breakers will be tested for proper trip operation, fuses will be checked to verify the sizes and types specified have been installed, and the board instruments will be calibrated. During plant power operations the vital 120-volt AC control power system will be periodically tested and inspected to ensure its continued capability to perform its operation. The inverters will be tested for their capability to transfer between the 480-volt AC normal power source and the 125-volt DC emergency power source. The inverter and auctioneering equipment may be removed from service for inspection and test by synchronizing and manually transferring to the maintenance power source. The surveillance instrumentation provides continuous monitoring of the system.

Design Bases and Criteria for Safety-Related Motors, Switchgear Interrupting Capacity, Circuit Protection, and Grounding

The design bases for safety related motors are the applicable Onsite Power System design basis listed in Subsection 8.1.4. In particular, bases 1, 3, 4, 5, and 6 apply to safety related motors. The criteria which are applied to motor size, starting torque, and insulation are as follows:

Motor Size and Starting Torque

Each motor has adequate capacity and operating characteristics for all conditions of starting and running which the connected equipment may impose.

The motor nameplate horsepower rating is not normally exceeded when the connected equipment is operating at rated capacity. Motor nameplate horsepower may be exceeded up to 15 percent, only for short-term service (only for motors with a marked service factor of 1.15).

Motor Insulation

For most applications insulation is NEMA class B or better. Motors in areas which are subject to unusual operating conditions either during normal, emergency, or accident operation are designed to be suitable for operation in these environment. These include conditions such as gamma radiation and high humidity, temperature, and pressure.

Electric Circuit Protection

Whether the 6900-volt shutdown boards are being supplied by their normal sources or alternate sources, the entire AC auxiliary power system from the station service transformer to the

emergency load motor control center electrically farthest from the sources is a coordinated selective trip system.

The circuit protective devices, the breaker interrupting ratings, and the 6900-480-volt transformer impedances are properly selected. That is, no motor will have excessive voltage drop on starting or running, each fault interrupter has a rating higher than the maximum available fault current, each motor protector is selected and set to protect the motor and its cable, and each motor feeder protective device is backed up by the next upstream circuit breaker in the event it should fail to open its circuit under fault. Backup protection will isolate the board feeding the faulted circuit but will not necessarily protect the circuit with the failed breaker against damage.

Motors rated 400 horsepower and above are supplied from 6900 volt shutdown boards.

Motors rated 350 horsepower and below are supplied from 480 volt shutdown boards. The smaller motors, in general 50 horsepower and below, are fed from 480-volt motor control centers. Larger motors are usually fed from 480-volt metal-enclosed switchgear (load centers), unless frequency of operation or location of motor relative to a feeder board indicate otherwise.

The 6600-volt motors are protected by induction-type, inverse-current overcurrent relays specially designed for protection of large motors. These relays have three individual contacts which respond to overload and locked rotor for motor protection and to circuit faults. All settings are initially selected according to relay instruction manuals but are subject to later changes if warranted by field tests or vendor information. Generally, the long-time current setting is selected slightly above the full load current at rated service factor (1.15 to 1.4 times normal full load current) and the time lever selection is made to permit locked rotor current to flow for the acceleration period if known or as predicted by experience. The instantaneous current setting is selected as approximately twice the locked rotor current.

The incoming supply breaker on a 480-volt switchgear board has an inverse-time, induction-type overcurrent relay. Each motor feeder breaker has a static-type overcurrent relay with long time and instantaneous settings. The instantaneous current setting is for short-circuit protection and is selected as approximately twice the locked rotor current to avoid nuisance tripping on inrush starting current. The long-time current setting for motor overload protection is as follows:

- 125% of motor full load current if service factor of motor is 1.15 (may be increased to 140 percent if required to start motor and carry load)

- 115% of motor full load current if service factor of motor is 1.0 (may be increased to approximately 130% if required to start motor and carry load).

The long-time delay setting is chosen to permit locked-rotor current for the accelerating time, if known, or according to the switchgear vendor's recommendation.

Each motor control center feeder breaker on the 480-volt switchgear board has a long time setting and a short time setting. These settings are selected such that the complete tripping time-current curve when plotted on coordination paper will be above the curve of the molded-case circuit breaker for the largest motor fed from the motor control center. This molded-case circuit breaker provides short-circuit protection. Motor overload protection is provided by overload heater elements in the motor starter. The incoming breaker in the motor control center is nonautomatic and thus has no trip settings.

Active motor operated valves (MOVs) conform to the intent of Regulatory Guide 1.106, Rev. 1 position C.1(a) (those activated by an accident signal have their TOL’s bypassed continuously) or position C.2 except for the auxiliary feedwater turbine (AFWT) trip and throttle MOV (1,2-FCV-01-51) which valves conform to the intent of regulatory position C.1(b).

Active valves are those valves required to perform a mechanical motion to fulfill their safety-related function. Since active valves are the only ones required to change position to shutdown the reactor, or mitigate the effects of a design basis event, they are the only MOVs requiring assurance of position change.

TVA complies with the intent of IE Circular No. 81-13 for active motor-operated valves.

Interrupting Capacity of Distribution Equipment

The criteria for selecting the interrupting capacity of switchgear are as set forth in ANSI Standard C37-010 for 6900-volt circuits and C37.13, section 13-9.3.5 for 480-volt circuits. No circuit interrupter is applied in a circuit where the maximum available fault to be interrupted, as calculated by standard procedures, exceeds the interrupting rating of the device. Circuit impedances were selected to limit fault magnitudes to the circuit breaker ratings without causing voltage to dip below the motor rated starting voltage when starting the largest motor.

The 6900-volt Class 1E switchgear is subjected to a maximum interrupting duty of less than 500 MVA which is within its one time rating of 550 MVA.

Grounding Requirements

The 6900 volt secondary winding of each unit and common station service transformer is wye-connected, with the neutral grounded through a resistor which will limit ground fault current to 1600 amperes maximum. The neutral resistor serves to prevent overvoltage on the winding which could occur in the event of a ground fault if the 6900-volt system were not intentionally grounded. Since there is a deliberate ground current path, each 6600-volt motor and 6900-volt transformer feeder circuit is protected by ground overcurrent relays which will trip that circuit's feeder breaker. The common station service transformer neutral resistor has an over-current relay which will trip the 161-kV breakers which supply that transformer from the 161-kV system. This overcurrent relay is coordinated with the downstream 6900-volt start buses ground overcurrent relays. This coordination is necessary because each start bus automatically transfers to its alternate supply common station service transformer on low voltage. If a start bus ground fault should cause the common station transfer to be deenergized before the fault is isolated by start bus supply breakers, the fault may be transferred to the other common station service transformer and cause it to be tripped also.

The ground overcurrent relays for 6900-volt load feeder circuits are static type used with a ground sensor current transformer which encircles all three conductors of the feeder cable. Thus the sensor is not subject to errors caused by motor starting inrush currents due to differences in saturation. The ground sensor relay then is instantaneous in operation; it can detect ground fault currents as low as 15 amperes. The objective of the sensitivity and speed of this ground protector is to limit the damage to the motor iron in the event of a ground fault. The ground fault current level of 1600 amperes has been successfully used in TVA projects for at least 10 years. This fault level is selected because it is large enough to enable early detection and low enough to prevent excessive damage before fault clearing by the feeder breaker.

The diesel generator is 6900-volt, 3-phase, wye-connected with the neutral grounded through a relatively high ohmic resistance to keep ground fault currents to a low level. The maximum ground fault current available from the diesel generator is approximately 4 amperes. Ground faults are detected by a voltage relay across the neutral grounding resistor. Grounds cause an alarm but do not cause any breaker operation.

The 480-volt system are supplied through 6900-480 volt delta-delta transformers, and 480-volt systems are not grounded. This permits minimum disturbance to service continuity. Ground detectors are provided on each 480-volt switch gear to indicate the presence of a grounded-phase conductor. IPCEA S-61-402 and S-66-524 recommend that cables have insulation levels of 173 percent of nominal for circuits that may be required to operate longer

than one hour continuously with one phase grounded. TVA meets the intent of the IPCEA recommendation by specifying that cable used in 480-volt circuits be rated at 600 volts with 133 percent insulation level. This application is equivalent to specifying 480-volt cable with 173 percent insulation level (within 4 percent). The nominal voltage between any line and a earth ground is 277V, but the maximum line to ground voltage with a single line to ground fault is 480V. No ground fault relaying was required since there would be only a very small current flowing to a single-line-to-ground fault. A ground fault on more than one phase is a line-to-line fault and will trip the feeder breakers of the faulted circuits.

8.3.1.2 Analysis

8.3.1.2.1 Standby AC Power System

The Standby AC Power System is designed to comply with the requirements set forth in GDC 17 and 18. The design also conforms with Regulatory Guides 1.6, Rev. 0 and IEEE Std 308-1971, and the intent of, but not the numerical values of, Regulatory Guide 1.9, Rev. 0. The following paragraphs discuss each of the requirements.

Capacity, Capability, and Margin

General Design Criteria 17

The standby AC power system is designed to provide sufficient capacity and capability to assure that (1) specified acceptable fuel design limits and design conditions of the reactor coolant pressure boundary are not exceeded as a result of anticipated operational occurrences (2) the core is cooled and containment integrity and other vital functions are maintained in the event of postulated accidents.

Regulatory Guide 1.9, Rev. 0[1]

Each diesel generator set is capable of starting and accelerating to rated speed, in the required sequence, all the needed engineered safety feature and emergency shutdown loads. At no time during the loading sequence does the frequency and voltage decrease to less than 95 percent of nominal and 75 percent of nominal, respectively.[2] During recovery from transients caused by step load increases or resulting from disconnection of the largest single load, the speed of the diesel generator set does not exceed 75 percent of the difference between nominal speed and the overspeed trip setpoint or 115 percent of nominal, whichever is lower. Frequency is restored to within 2 percent of nominal, and voltage is restored to within 10 percent of nominal within 60 percent of each load sequence time interval. A greater percentage of the time interval may be used if it can be justified by analysis.[1]

IEEE Std 308-1971

Each distribution circuit is capable of transmitting sufficient energy to start and operate all required loads in that circuit.

A failure of any unit of the standby power source (diesel) does not electrically jeopardize the capability of the redundant standby power sources (diesels) to start and run the required shutdown systems, emergency systems, and engineered safety feature loads.

Fuel at the site has the capacity to operate the standby power source (diesels) while supplying post-accident power requirements for seven days.

The total standby power source (diesel) capacity for the plant is sufficient to operate the engineered safety features for a LOCA in one unit and those systems required for concurrent

---

[1]Voltage and Frequency recovery requirements are taken from Regulatory Guide 1.9, Revision 1.
[2]Exception is taken for frequency immediately following DG breaker closure. The DG breaker is designed to automatically close at about 94 percent of nominal frequency. This exception was accepted in Safety Evaluation Report NUREG-1232 Vol. 2 dated May 1988.

safe shutdown on the remaining unit. No single failure of a standby power source unit (diesel) will jeopardize this capability.

Redundancy

General Design Criteria 17

The onsite AC electrical power sources (diesels) and the onsite electrical distribution system have sufficient independence, redundancy, and testability to perform their safety function assuming a single failure.

Regulatory Guide 1.6, Rev. 0

The electrically powered AC safety loads are separated into redundant load groups such that loss of any one group will not prevent the minimum safety functions from being performed.

IEEE Std 308-1971

Sufficient physical separation, electrical isolation, and redundance is provided to prevent the occurrence of common failure mode in Class 1E systems. The Class 1E system design includes:

(1) Electric loads separated into two redundant load groups.

(2) The safety actions performed by each group of loads are redundant and independent of the safety actions provided by its redundant counterpart.

(3) Each of the redundant load groups has access to both a preferred and a standby power supply. Each power supply consists of one or more sources.

Independence

Regulatory Guide 1.6, Rev. 0

The design of the standby ac power system conforms with the independence requirements placed on redundant systems by Regulatory Guide 1.6, Rev. 0.

These include:

(a) The standby source of one load group cannot be automatically paralleled with the standby source of another load group or with the offsite system.

(b) No provisions exist for automatically connecting one load group to another load group.

(c) No provisions exist for automatically transferring loads between redundant power sources.

(d) Where means exist for manually connecting redundant load groups together, at least one interlock is provided to prevent an operator error that would parallel their standby power sources.

IEEE Std 308-1971

Class 1E electric equipment is physically separated from its redundant counterpart or mechanically protected as required to prevent the occurrence of common failure mode.

Each type of Class 1E electric equipment is qualified either by analysis, successful use under conditions, or by actual test to demonstrate its ability to perform its function under normal and design basis events.

Distribution circuits to redundant equipment are physically and electrically independent of each other.

Auxiliary devices that are required to operate dependent equipment are supplied from a related bus section to prevent the loss of electric power in one load group from causing the loss of equipment in another load group.

Protective devices are provided to isolate failed equipment automatically. Sufficient indication is provided to identify the equipment that is made unavailable.

By means of breakers located in Class 1 structures it is possible to disconnect completely Class 1E systems from those portions located in other than Class 1 structures.

Surveillance and Testability

General Design Criteria 18

Electric power systems important to safety are designed to permit appropriate periodic inspection and testing of important areas and features. In particular, the systems are designed with capability for periodic testing of the operability and functional performance of the components of the systems, such as onsite power sources, relays, switches, and buses, and also, the operability of the systems as a whole. In addition, under conditions as close to design as practical, the full operational sequence that brings the systems into operation will be tested periodically including applicable portions of the protection system, and the transfer of power among the nuclear power unit, the offsite power system, and the onsite power system.

The distribution system is monitored to the extent that it is shown to be ready to perform its intended function.

Status indicators are provided to monitor the standby power supply continuously. Annunciators are provided in the control room to monitor and alarm the status of the standby power supply.

Availability

IEEE Std 308-1971

The standby power supply is available following the loss of the preferred power supply within a time consistent with the requirements of the engineered safety features and the shutdown systems under normal and accident conditions.

8.3.1.2.2 Analysis of Vital 120-Volt AC Control Power Systems, AC Distribution Boards, and Inverters

General

The 120-volt AC Class 1E electrical systems were designed, components fabricated, and have been installed meeting the requirements of the NRC 10 CFR 50 General Design Criteria, IEEE Std 308-1971, NRC Regulatory Guides 1.6, Rev. 0 and 1.9 Rev. 0, IEEE Std 336-1971, and other applicable criteria as referenced herein.

Refer to section 8.3.1.1 for equipment locations and system description. Refer to Subparagraph 8.3.1.4.2 for separation conformance.

Since this equipment is outside the primary containment area, it will not be exposed to hostile environments or significant radiation due to a LOCA. The system design, equipment location, separation, and redundancy assure ability to meet the requirements for the applicable accident in Chapter 15 and are in full compliance with NRC General Design Criteria 17 and Regulatory Guide 1.6 Rev. 0.

120-Volt AC Vital Instrument Power Distribution Boards

All load output circuit breakers used on the boards are high-speed hydraulic-magnetic type having the unique characteristic of high-speed tripping at low-fault currents. This type breaker is capable of providing low-fault current selective tripping when the board power source is from the inverter which has a low-fault current capability. The breakers are fed in groups from a stub bus with a current-limiting fuse. The fuses and breakers have current-time tripping characteristics which are coordinated with the load cable and/or load thermal characteristics to provide selective clearing of all faults.

The bus work within the board is sized electrically to supply the maximum load required and is capable of withstanding the electrical and mechanical forces resulting from the maximum short-circuit current available.

The input power is delivered to the main bus via a manually operated transfer switch. The switch has make-before-break contacts that permit transferring the bus feeder from either source while maintaining circuit continuity.

Uninterruptible Power Supply (120 Volt AC Vital Inverter)

The UPS delivers the required AC power via a 2-wire, 120-volt circuit. The electrical characteristics of the UPS units are sized and coordinated to maintain the required inverter output for the worst maximum or minimum operable input conditions. Each UPS system is capable of delivering 167 amperes continuously which is adequate to meet the maximum design load requirement of 125 amperes. Also each UPS systems is capable of delivering without damage a short-circuit current of 334 amperes for a period of at least 1.5 seconds to assure selective tripping of the AC distribution board feeder breakers.

The normal AC input power is derived from the 480-volt shutdown boards. The 480V normal AC input is rectified to DC power. The DC alternate input power source is derived directly from the DC distribution board. The DC alternate input is biased against the normal rectified AC input by means of an "auctioneered" diode circuit to permit use of the battery source only in the event the rectified DC input voltage falls below that of the battery. Input protective devices for both sources are coordinated and sized in accordance with circuit requirements.

Surveillance and Monitoring

Each distribution board and UPS system is equipped with the proper instruments to provide visual indication of the necessary electrical quantities. All circuit breakers and fuses are equipped with an alarm contact that closes for a blown fuse or automatic operation of a circuit breaker. Undervoltage alarm relays provide annunciation for loss of power on the buses or power input to the UPS. Closure of any alarm contact provides annunciation in the main control room.

Seismic Qualification

One complete board assembly and one complete UPS system assembly have been subjected to the SSE as described in Section 3.10. The tests were performed in conformance to IEEE Std 344-1971, Guide for Seismic Qualification of Class 1E Electric Equipment. Equipment surveillance and alarm components were energized and monitored during the test. The seismic test assures that

the complete assembly will continue to function properly and continue to deliver the required power during and after any expected SSE condition.

Design Test

All inverters were electrically tested to assure that each unit is capable of performing all requirements as specified.

All boards were subjected to and satisfactorily passed the following tests as specified under the indicated paragraphs of section 20-5 of ANSI C37.20-1969:

20-5.2.1.1 - Power Frequency Withstand
20-5.2.2 - Rated Continuous Current
20-5.2.3 - Momentary Current
20-5.2.8 - Flame Resistance for Barrier, Bus, and Wire Insulation
20-5.3.2 - Mechanical Operation
20-5.3.4.1 - Control Wiring Continuity
20-5.3.4.2 - Control Wiring Insulation

All molded-case circuit breakers comply with NEMA Publication NO. AB-1-1964 requirements. All control circuit wiring has insulation rated 600 volts in accordance with paragraph 6.1.3.1 of ANSI C37.20-1969. All equipment is certified to operate within the environmental requirements called for in the design criteria. (Refer to Section 3.11) The arrangement of circuit interrupters and switches permits easy isolation of the installed assemblies for future test and maintenance purposes.

Quality Assurance

A QA program implemented from the beginning of the specification for this equipment and continued throughout installation and final checkout assures that the equipment meets all applicable design and operational criteria. The specifications require that suppliers of this equipment maintain a QA program throughout the duration of the contract and that the program conform to the essential elements as defined in NRC Appendix B of 10 CFR, Part 50. An inplant examination of each contractor's QA program assures compliance with these requirements. The design, specification, and any design changes are reviewed by designated staff engineers to assure compliance with QA procedures and design criteria. All records, drawings, test reports, etc., depicting quality assurance review are maintained in appropriate files in accordance with established procedures.

8.3.1.2.3 Safety-Related Equipment in Potentially Hostile Environment

The safety related electrical equipment that must operate in a hostile environment during and/or subsequent to an accident is identified below. Safety-related electrical equipment located in a harsh environment (both inside and outside containment) has been evaluated against the environmental conditions as described in section 3.11.

Electrical equipment located inside containment has been designed to maintain equipment safety functions and to prevent unacceptable spurious actuations. All power cables feeding equipment inside containment are provided with individual circuit breakers to protect the cable and penetration (both 1E and non-1E) from the effects of electrical shorts.

Additionally, each power cable except cables for 6.9kV circuits is provided with a cable limiter fuse which, in the event of a breaker failure, is designed to protect the containment penetration. These breakers and fuses ensure that, should an electrical short occur inside containment, the mechanical integrity of the electrical penetration will be maintained.

A listing of major nonsafety-related electrical components located inside containment that may be inundated following a LOCA appears in Table 8.3.1-11 along with an explanation of the

safety-significance of the failure of the equipment due to flooding. In addition to the electrical equipment listed in the table, the water level inside containment may also flood nonsafety related local control stations, electrical sensors, electric motors for motor operated valves, and electric solenoids for air-operated valves. The following paragraphs illustrate how the flooding of this equipment does not affect the plant safety.

All local control stations located inside the containment are either provided with manual throw switches outside the containment at the motor control center or have their power disconnected permanently. These manual switches, when provided, are used to remove control power from the local control switches during normal operation. In order to utilize the local control stations during operating condition where containment access is permitted, the manual switch must be closed to provide power to the local stations. Indications are provided in the main control room for the manual throw switch positions; this indication is accomplished either electrically or administratively. In the cases where local control stations are installed inside the containment but analysis indicates their use is no longer required, the control power is removed for all modes of operation. Thus, spurious operation of equipment due to post-LOCA submergence of the local control station is prevented.

There are no electric motor-operated valves located inside containment below the maximum LOCA water level that are required to function for other than containment isolation. Valves used for containment isolation will close prior to submergence. The submergence of a motor-operated valve will not cause the valve to change from its safe position.

The control air supply is automatically isolated outside containment in the event of a LOCA (Phase B). The air operated valves are fail closed as are the inline solenoid valves. Therefore, the submergence of electric solenoids serving air-operated valves cannot affect the safe positioning of these valves.

The plant operators rely on the qualified post accident monitors following a LOCA so that any spurious indications from nonqualified electrical sensors that could become submerged would not jeopardize appropriate operator actions.

There is no Class 1E equipment required to operate during or after a LOCA or main steam line break that will be submerged. Some Class 1E cable is located below flood level. This cable is protected by being enclosed in a sealed raceway. Such equipment is designed to meet the average worst possible containment environmental conditions, as given in FSAR Section 3.11.

Inside Primary Containment

Cable materials for use inside containment meet IEEE 383-1974 flame test or equal. Additional flame tests that are determined to be equal or better than IEEE 383 are documented in Reference 1. The use of polyvinylchloride (PVC) jacketed cable inside containment at Sequoyah Nuclear Plant has been minimized to the extent possible. The reactor coolant pump power cable is PVC jacketed but is also almost completely enclosed by conduit.

Cable insulation and jacket materials are identified and specified in Reference 1. The materials are selected based on temperature rating, ampacity, and environmental considerations as described in UFSAR Section 3.11.

Electrical Penetration Cables

The cables are derated and sized according to their ampacities for the penetration ambient temperatures. The cables have passed all tests conforming to IEEE Standards for Electrical Penetration Assemblies in Containment Structures for Nuclear Fueled Power Generating Stations, IEEE 317-1971 or IEEE 317-1976 or IEEE 317-1983.

Overcurrent Protection for Containment Electrical Penetration Assemblies

Refer to section 7.1.3 for a description of the various types of penetrations. As shown in Figures 8.3.1-17 through 8.3.1-20, the time/current damage curve for the penetration is above that shown for the protective devices and the maximum available circuit current. This along with the seismically designed cable supports in Category I structures provide assurance of containment penetration integrity.

1. 6900 Volt Circuit

   The power circuits for the reactor coolant pump are the only 6900 volt circuits which penetrate the containment. Figure 8.3.1-17 shows the circuit, maximum available short circuit current, and the associated time/current curves for the protective devices and the penetration. The branch circuit breaker which controls the pump and the supply feeder breaker are controlled from separate DC supplies and provide the required redundancy to ensure penetration integrity.

2. 480 Volt Circuit

   An example of a typical 480-volt circuit electric penetration is shown in Figure 8.3.1-18. The circuit and curves shown are for a circuit fed from the 480-volt low voltage switchgear and contain a low voltage power circuit breaker with a solid-state overcurrent trip device and a current limiting fuse. The circuit breaker time/ current characteristics are bounded by two curves as determined from manufacturer's data.

3. 120 Volt AC Circuit

   Figure 8.3.1-19 shows the circuit and associated curves for a typical 120 volt AC circuit. This circuit utilizes a circuit breaker and a dual element fuse to provide the required redundancy. The circuit breaker is bounded by two curves as determined from manufacturing tests.

4. 125 Volt DC Circuit

   Figure 8.3.1-20 shows the circuit and associated curves for a typical 125 volt DC circuit through penetration. This circuit utilizes a fuse in addition to a circuit breaker to ensure containment penetration integrity. The circuit breaker is bounded by two curves as determined from manufacturing test.

Outside Primary Containment

Initial plant design required cables which run on cable trays and switchboard (which includes instrument panels) wiring that were capable of passing the vertical flame test according to section 6.19.6 of Insulated Power Cable Engineers Association (IPCEA) Standard S-19-8I (fifth edition). Current design requirements for cables require them to meet IEEE 383-1974 flame test or equal. Current design requirements for switchboard wiring (14AWG and larger) require them to meet VW-1 flame test of UL44. Switchboard wiring 16AWG and smaller meet the flame test of IEEE 383-1974 paragraph 2.5.6. Additional flame tests that are determined to be equal or better than IEEE 383 are documented in Reference 1. The fire protection system (and the cable requirements) is described in The Fire Protection Report (see Section 9.5.1). The cable tray fill is limited and conservative cable temperature ratings are used to assure that cable fires will not occur as a result of overheating. Cable insulation and jacket material are selected based on temperature rating, ampacity, and environmental considerations as described in UFSAR Section 3.11.

The features provided to ensure Main Control Room habitability during and after a postulated hazardous chemical release meet the guidelines given in Regulatory Guide 1.78, Rev. 0, Regulatory Position 14, even though the design was completed well before issuance of the Regulatory Guide. Refer to paragraph 6.4.1.3 and section 9.4.1 for further discussion of the features provided for the Main Control room Habitability System.

Qualification Tests and Analyses

Description of Qualification Tests Performed on Class 1E Electrical Equipment Cables Inside Primary Containment.

For qualification testing, a cable type includes those cables having the same materials, dielectric level, similar construction, and manufacturing process by a given manufacturer. The specifications required a selected cable type sample of low-voltage power or control, and signal cable be subjected to tests to confirm its capability to function in the postulated environment during and subsequent to a loss-of-coolant accident (LOCA).

Electrical Penetration Assemblies

The electrical penetration assemblies have been qualification type tested by the vendors, Westinghouse Electric Corporation and Conax Corporation and approved by TVA. Tests were performed to verify that the penetration assemblies were capable of continuous operation under normal and emergency environmental conditions, and were capable of maintaining the following containment integrity. These tests envelope plant parameters listed below.

Normal Environmental Conditions

Parameters	Inside Containment	Outside Containment (Annulus)
Temperature	60°F to 135°F	50°F to 105°F
Pressure	14.3 psia to 14.7 psia	Atm (-)
Relative humidity	30% - 80%	10% - 90%
Accumulated radiation dose	1×10^8 rad	

Emergency Environmental Conditions

First 20 Minutes

Parameter	
Temperature	259°F
Pressure	-0.1 to +12 psig
Relative humidity	30% - 100%

Next 10 days

Parameter	
Temperature	150°F
Pressure	-0.1 to +12 psig
Relative Humidity	30% - 100%

Penetration assemblies were also subjected to a borated water spray that is more severe than Sequoyah's chemical spray composition of 0.184 molar H_3BO_3 (2000 PPM boron), 0.033 molar NaOH resulting in a ph of 8.3 at 25°C.

Qualification Test Results

Cables Inside Containment

The documentation of successful completion of test included certified test reports of all tests required and listed in the specifications and its quality assurance appendix, and applicable TVA inspector's reports. Some test results were obtained from tests performed during the manufacturing process, on samples selected in accordance with the specification. Other test results, comparable to the requirements specified, were obtained from previous type tests performed on cables having known or proprietary materials in their construction. The manufacturer has certified that the cable furnished, duplicates the production and materials composition of the tested cable.

Electrical Penetration Assemblies

The Westinghouse canister type electrical penetration assemblies have been tested to TVA specification requirements which conform to IEEE-317, 1971, "IEEE Standard for Electric

Penetration Assemblies in Containment Structures for Nuclear Power Generating Stations." The Conax and Westinghouse modular electrical penetration assemblies meet the 1976 or 1983 version of IEEE-317. Each penetration complies with the standard that was applicable at the time of procurement.

The documentation of successful completion included certified test reports of all tests required and listed in the specifications and quality assurance appendix, and applicable TVA inspector's reports.

Each electrical penetration assembly furnished has been shop inspected by a commissioned representative of the National Board of Boiler and Pressure Vessel Inspectors. Each assembly has been Code stamped, in accordance with the 1971 or 1986 Edition ASME Boiler and Pressure Vessel Code, Section III.

The dose rate at which TVA has conducted 100 hour tests on materials and equipment is 10^6 Rad/hr dose rate that may occur during the first hour of a LOCA. It is the TVA position that a factor of 5 in dose rate is not significant in this region. There is no mechanism that TVA is aware of that would tend to produce significant increases in degradation in the region between 10^6 and 10^7 Rad/hr. However, radiation-induced oxidation of materials can become an important damage mechanism at lower exposure rates and consequent longer exposure times. Therefore, IEEE 278, "Guide For Classifying Electrical Insulating Materials Exposed to Neutron and Gamma Radiation," recommend using exposure rates above 10^7 Rad/hr. It is the TVA position that 10^6 Rad/hr for 100 hours represents a reasonable and conservative combination of dose rate and exposure time for radiation testing.

Cable terminations to low voltage power, control, and indication penetration assemblies are generally made in all metal splice boxes. However, in a number of instances on the outboard side of containment electrical penetrations, field cables were spliced to the penetration pigtails in cable trays. In these cases, a special enclosure was used to act as a qualified fire stop. These particular splices are located within the last 5-foot section of the cable tray. The trays in the annulus area of containment containing these splices are fitted with solid top and bottom covers in the immediate area of these splices. A qualified fire barrier made of silicone foam and ceraform/kaowool fiberboard was installed on the side of the splice opposite to the penetration. On the other side of the splice in the tray (end of tray runs toward the electrical penetration), kaowool materials were inserted in the voids between conductors, and all the exposed conductors to the electrical penetration were covered with Flamemastic material. Replacement penetrations manufactured to IEEE 317-1983 with pigtails in accordance with IEEE 383-1974 will not have their conductors coated with flamemastic between the splice enclosures and the penetration because the cables are flame retardant without the coating. This configuration constitutes a qualified fire barrier which in the unlikely event of a fire in the splice area, will contain and isolate the fire from adjacent trays of electrical equipment. Splices were made in accordance with vendor-recommended splicing procedures, and fully meet the environmental qualifications required for this location. The fire barrier and the electrical penetration splice box designs are based upon tests performed by Factory Mutual and TVA on full scale mockups. The TVA test results have been reviewed and approved by the NRC.

8.3.1.3 Conformance with Appropriate Quality Assurance Standards

Conformance with appropriate quality assurance is described in Chapter 17 and the Nuclear Quality Assurance Plan.

8.3.1.4 Independence of Redundant AC Power Systems

The criteria and their bases which have been used to establish the minimum requirements for preserving the independence of redundant Class 1E electric systems are stated in IEEE-308 and Regulatory Guide 1.6, Rev. 0. The TVA Nuclear Quality Assurance Plan describes the administrative responsibility and control that has been provided to assure compliance with these criteria during the design and installation.

The nuclear power generating station protection system (GSPS) includes the reactor protection system (RPS), engineered safety features (ESF), essential supporting auxiliary systems (ESAS),

and Class 1E electric systems. These systems are required for the safe shutdown of the reactor. Redundant systems are provided so that single failures, including failure of a redundant subsystem, will not result in failure to safely shutdown the reactor.

The reactor protection system (RPS) is the overall complex of instrument channels, power supplies, logic channels, and actuators together with their interconnecting wiring, involved in producing a reactor trip and is further described in section 7.2.

The engineered safety features (ESF) and essential supporting auxiliary systems (ESAS), as elements of the nuclear power generating station protection system, are the systems which take automatic action to isolate and to provide the cooling necessary to remove the thermal energy and thus enable the containment of fission products within the reactor vessel and primary containment in the event of a serious reactor accident. Certain ESAS systems may also be on continuous duty to prevent as well as to mitigate reactor accidents. Examples of ESAS systems are component cooling, emergency raw cooling water, together with their supporting electrical power and control systems.

These ESF systems consist of sensor instrument channels, power supplies, actuation channels, and actuators together with their interconnecting wiring involved in the operation of engineered safety features are actuated by the separate actuation channels. Each coincidence network energizes an engineered safety features actuation device that operates the associated safety features equipment (e.g., motor starter, valve operator, etc.) and are further described in section 7.3.

8.3.1.4.1 Cable Derating and Cable Tray Fill

Limitations imposed by cable tray fill and EQ cable derating have been considered in cable applications.

Selection of conductor sizes are based on IPCEA P-46-424 Power Cable Ampacities, except for safety related cable in tray, which are based on IPCEA P-54-440. Circuit breakers are used for high-speed clearing of faults to prevent damage to the 3-phase power cables. For power cables rated above 600 volts between conductors, the minimum size is 2/0 AWG. Ampacity of cables feeding motor circuits is based on not less than 125 percent of full-load current.

Conduit (for three cables or more) is sized for a maximum of 40 percent cable fill of the inside area of the conduit. Conduit for two cables is sized for a maximum of 31 percent cable fill of the inside area of the conduit. Conduit for single cables are sized for a maximum of 53 percent cable fill. Medium-voltage (6900-volt) power cables are routed on trays with other cables of the same voltage. All 6900-volt cables larger than 2/0 AWG are grouped triangularly and are separated from other circuits by a minimum distance overall of one fourth the effective diameter of the grouped 3-phase circuit. The 6900-volt cables which are 2/0 AWG may be laid at random on cable trays and are separated (as described above) from grouped 3-phase circuits. The nominal spacing may be less where cables enter or exit a tray and at tray fittings where it is necessary to prevent exceeding the minimum cable bend radius. However, nominal spacing is restored as soon as practical. Low-voltage power cable tray fill shall be limited to a maximum of 30 percent of the cross-sectional area of the tray, except when a single layer of cable is used. Cable tray fill for control and instrumentation cables shall be limited to a maximum fill of 60 percent of the cross-sectional area of the tray (if all cable are limited to 10A and less). Any exceptions to the above are evaluated and documented in design criteria SQN-DC-V-12.2 and/or SQN-DC-V-11.3.

8.3.1.4.2 Cable Routing and Separation Criteria

Electrical wiring for the GSPS, which includes the RPS, ESF, ESAS, and Class 1E electric systems, are segregated into separate divisions of separation (channels or trains) such that no single event, such as a short circuit, cable fire, pipe rupture, missile, etc., is capable of disabling

sufficient equipment to prevent safe shutdown of the reactor, removal of decay heat from the core, or to prevent isolation of the primary containment. The degree of separation required for GSPS electrical cables varies with the potential hazards in a particular zone or area of the power plant. These criteria do not attempt to classify every area of the nuclear plant, but specifies minimum requirements and guidelines that have been applied with good engineering judgment as an aid to prudent and conservative layout of electrical cable trays, wireways, conduits, etc., throughout the plant (both inside and outside the containment). Any exceptions to the requirements in this section are evaluated and documented in design criteria SQN-DC-V-12.2.

Mechanical Damage (Missile) Zone

Zones of potential missile damage exist in the vicinity of heavy rotating machinery or near other sources of mechanical energy, such as pipe whip, steam release, or pipes carrying liquids under high pressure. Layout and arrangement of cable trays, conduit, wireways, etc., are such that no locally generated force or missile can destroy both GSPS. In rooms or compartments having heavy rotating machinery, such as the reactor coolant pumps, or in rooms containing high-pressure feedwater piping or high-pressure steam lines, a minimum separation of 20 feet, or a minimum 6-inch thick reinforced concrete wall is provided between trays containing cables of different divisions. In an area containing an operating crane, such as the upper compartment of the reactor building, there is a minimum horizontal separation of 20 feet or a minimum 6-inch thick reinforced concrete wall between trays containing cables of the different divisions of separation.

Fire Hazard Zone

The electrical cabling has been arranged so as to eliminate, insofar as is practical, all potential for fire damage to cables and to separate the redundant divisions of GSPS cabling. Such arrangement ensures that fire in one division will not cause damage to cables in another division. Routing of power or control cable for GSPS through rooms or spaces where there is potential for accumulating large quantities (gallons) of oil or other combustible fluids through leakage or rupture of lube oil or cooling systems is avoided where possible. In cases where it is impossible to provide other routing, only one division of GSPS cables are allowed in any such space, and the cables are protected from dripping oil by the use of conduits or flanged covered cable trays designed to prevent oil from reaching the cables. No GSPS cables are routed through rooms containing oil storage tanks. In any room (except the auxiliary instrument room and the annulus) or space in which the only source of fire is of an electrical nature, cable trays carrying redundant divisions of GSPS cables have a minimum horizontal separation of 3 feet if no physical barrier exists between the trays. If a horizontal separation of at least 3 feet is not attainable, a fire-resistant barrier is provided. This barrier is either a 1/2-inch minimum thickness of Marinite-36 (or its equivalent), or a fire-resistant barrier of two sheets of minimum 14-gauge steel with a minimum 1-inch air space separating the two sheets of steel, extending at least 1 foot above (or to the ceiling) and 1 foot below (or to the floor) the line-of-sight communication between the two trays. Vertical stacking of trays carrying cables of different divisions of GSPS cables is avoided whenever possible. However, whenever it becomes necessary to stack open-top trays vertically, one above the other, there is a minimum vertical separation of 5 feet between trays carrying cables of different divisions. The lower tray has a solid steel cover and the upper tray has a solid steel bottom. If 5 feet is not attainable, then a fire-resistant barrier is provided. This barrier is either a 1/2-inch minimum thickness of Marinite-36 (or its equivalent), or two sheets of minimum 14-gauge steel with a minimum 1-inch air space separating the two sheets of steel. This barrier extends a minimum of 3 feet (or to nearest wall) on each side of the tray edge. In cases where trays carrying cables of different divisions of separation cross, there is a minimum vertical separation of 12 inches (tray top of lower tray to tray bottom of upper tray) with the bottom tray covered with a solid steel cover and the top tray provided with a solid steel bottom for a minimum distance of 3 feet on each side of the tray crossing.

Cable Spreading Room

The cable spreading room is the area provided under the main control room where cables leaving the various control board panels are dispersed into cable trays or conduits for routing to all parts

of the plant. Since the cable spreading room is protected from missiles by its seismic Category I walls and there are no internal sources of missiles, such as high-pressure piping or heavy rotating machinery, the only potential source of damage to redundant cables is from fire. Fire protection features provided for the cable spreading room are described in the Fire Protection Report (see 9.5.1). Where GSPS cables of different divisions of separation approach the same or adjacent unit control panel (see the Main Control Room discussion) with spacing less than 3 feet, these cables are run in metal (rigid or flexible) conduit or enclosed wireway to a point where 3 feet of separation exists. A minimum horizontal separation of 3 feet separates trays carrying cables of different divisions (channels or trains) if no physical barrier exists between the trays. Where a horizontal separation of 3 feet does not exist, a fire-resistant barrier of either a 1/2-inch minimum thickness of Marinite-36 (or its equivalent), or two sheets of steel (minimum 14 gauge) with a minimum 1-inch air space separating the two sheets of steel, extending at least one foot above (or to the ceiling) and one foot below (or to the floor) the line-of-sight communication between the two trays. Vertical stacking of cable trays carrying cables of different divisions of separation has been avoided whenever possible. However, whenever it becomes necessary to stack open trays vertically, one above the other, there is a minimum vertical separation of five feet between trays carrying cables of different divisions of separation. The lower tray has a solid steel cover and the upper tray has a solid steel bottom. If five feet is not attainable, then a fire-resistant barrier is provided. This barrier is either a 1/2-inch minimum thickness of Marinite-36 (or its equivalent), or two sheets of steel (minimum 14 gauge) with a minimum 1-inch air space separating the two sheets of steel. This barrier extends a minimum of 1 foot (or to the nearest wall) on each side of the tray edge.

In cases where trays carrying cables of different divisions of GSPS cables cross horizontally, there shall be a minimum vertical separation of 1 foot (tray top of lower tray to tray bottom of upper tray). The bottom tray shall be covered with a solid steel cover, and the top tray provided with a solid steel bottom for a minimum distance of 3 feet on each side of the tray crossing or to the wall(s).

Auxiliary Instrument Room and Reactor Building Annulus

The auxiliary instrument room is the area under the cable spreading room. The auxiliary instrument room contains the process instrument racks, the solid-state protection racks, and associated instrument and relay racks. Since the auxiliary instrument room is protected from missiles by its seismic Category I walls and there are no internal sources of missiles, such as high-pressure piping or heavy rotating equipment, the only potential source of damage to redundant cables is from fire. Fire protection features provided for the auxiliary instrument room are described in the Fire Protection Report (see 9.5.1). No power cables that have a protective device rated greater than 30 ampere are routed in this room unless they are in separate conduits.

Solid-bottom type cable trays with solid steel flanged covers have been used where a minimum horizontal separation of 1 foot and a minimum vertical separation of 3 feet cannot be maintained. A minimum horizontal separation of 1 foot is provided between trays carrying cables of different divisions (channels or trains) if no physical barrier exists between them. If required the same barriers as in the cable spreading room are provided. Whenever it becomes necessary to stack different division trays vertically, one above the other, there is a minimum separation of 3 feet between these trays carrying cables of different divisions. If 3 feet is not attainable, then a fire-resistant barrier is provided. Whenever it becomes necessary to stack channel I, II, III, or IV trays vertically, one above the other, there is a minimum separation of 1 foot between the tray top of lower tray and the tray bottom of upper tray. If 1 foot is not attainable, then a fire-resistant barrier is provided. These barriers for trays (trains or channels) stacked vertically are equivalent to either a 1/2-inch minimum thickness of Marinite-36 (or its equivalent), or two sheets of steel. This barrier extends a minimum of 1 foot (or to nearest wall) on each side of the tray edge. In cases where redundant trays cross, there is a minimum vertical separation of 1 foot (tray top of lower tray to tray bottom of upper tray) with covers and

bottoms 3 feet on each side of crossing. As the cable trays or enclosed wireways leave the solid-state protection system racks, they are spread as soon as possible to attain these separations.

The Annulus

The annulus is the area in the reactor building between the steel containment vessel and the concrete shield building. Cables leaving the various electrical penetrations in the annulus are dispersed into cable trays or conduit for routing through the shield building wall to other areas of the plant. Since the annulus is missile protected by its seismic Category I wall and there are no internal sources of missiles such as rotating heavy machinery, the only potential source of damage to redundant cables would be from fire. Fire protection features provided for the annulus are described in the Fire Protection Report (see 9.5.1). Separation requirements for raceways containing redundant divisions of GSPS cables are the same as the Auxiliary Instrument Room.

Main Control Room and Auxiliary Control Room

Redundant GSPS cables enter the main control room through separate floor openings. Each unit control panel, which has redundant components, has a minimum of three separate vertical and/or horizontal risers (enclosed wireways) from each of the respective terminal block groups to the control room floor (or bottom of walk space). Metal conduit penetrations may also be used to provide separation. Non-safety related cables are routed through one or more riser(s), preferably near the center of the control panel. The redundant GSPS cables (train A or train B separation) are routed separately in each of the other two or more risers, preferably one near each end of the control panel. Risers of like trains of separation have been arranged such that the adjacent panel has a corresponding like train riser (i.e., train A in one panel has train A nearest it in the adjacent panel).

The minimum separation distance between redundant Class 1E circuits internal to Control Boards, Panels, Relay Racks, etc., is 6 inches of free air space. Wherever this separation distance is not maintained, barriers are provided between redundant Class 1E wiring. Within the Westinghouse supplied main and auxiliary control room panels, braided sheath material, such as Belden Braid, is an acceptable barrier for reducing the redundant Class 1E separation to less than 6 inches. The braid is used only over wire with teflon or other approved insulation. Braid covered wiring for redundant Class 1E circuits are restrained such that their braids do not touch nor are they able to migrate with time to touch.

Within an enclosure containing multiple divisions of wiring the redundant divisions of Class 1E wiring are separated from non-divisional wiring by a 6-inch air space or barrier, except as described below. If non-divisional wiring must be terminated on a Class 1E (divisional) component (switch, relay, terminal block, etc.), the component must be rated for the maximum voltage and current which could be applied to the non-divisional component and the non-divisional circuit is run with the divisional wiring, terminated on the divisional riser, and treated as a non-divisional cable routed with divisional (GSPS) cables per cable tray and conduit systems separation requirements. The non-divisional wiring is in close proximity to the Train "A" wiring and must not be routed with Train "B" cables or routed to Train "B" equipment.

Most Class 1E panels and enclosures contain wiring for only one division of redundant Class 1E circuits and wiring for non-divisional circuits. For these enclosures the non-divisional circuit wiring is assumed to be in close proximity to the wiring for the single division of Class 1E circuits in the enclosure. Therefore, the entire non-divisional circuit (including external cabling) is separated from all wiring and cabling of the opposite redundant division of Class 1E circuits. All non-divisional cables routed to the enclosure are treated as "non-divisional cables routed with divisional (GSPS) cables" per cable tray and conduit systems separation requirements. Also see section 7.7.1.10 for electrical separation in the panels.

Wiring for utility power outlets and lighting circuits installed in control boards, panels, or enclosures are in dedicated conduits to provide separation from Class 1E and Non-Class 1E wiring.

Non-safety related functions that are derived from Class 1E circuits must employ adequate isolation. Isolation is adequate if no credible failure on the non-Class 1E circuit prevents the Class 1E circuit from performing its design basis function. Credible failures include short circuits, open circuits, grounds, and the application of the maximum credible AC or DC potential.

Separation of Class 1E Electric Equipment

All Class 1E electric equipment has physical separation, redundancy, and a controlled environment to prevent the occurrence of an external event that would threaten the safe shutdown of the reactor. No internally generated fault can propagate from Class 1E electric equipment to its redundant equipment during any design basis event. All Class 1E electric equipment that has to operate during a flood has been located above maximum possible flood level unless it is designed to operate submerged in water.

Separation for fire protection is provided as described in the Fire Protection Report (see FSAR Section 9.5.1).

The Class 1E electrical loads are separated into two or more redundant load divisions (channels or trains) of separations. The number of divisions has been determined by the number of independent sources of power required for a given function. The electric equipment that accommodates these redundant divisions is separated by sufficient physical distance or protective barriers. The separation distance has been determined by the severity and location of hazards. The environment in the vicinity of the equipment is controlled or protection provided such that no environmental change or accident will adversely affect the operation of the equipment.

The physical identification of safety-related electrical equipment is in accordance with Paragraph 8.3.1.5.

6900-Volt Equipment

The diesel generators and 6900-volt shutdown boards are designed for a two-division (train A and train B) separation. Refer to section 8.3.1.1 for location and arrangement information. The 6900-volt equipment is located in seismic Category I structures. The diesel generators are shown in Figure 1.2.3-17. The 6900-volt shutdown boards are shown in Figure 1.2.3-3.

480-Volt Equipment

The 480-volt shutdown boards, 480-volt reactor MOV boards, 480-volt reactor vent boards, and control and auxiliary building vent boards locations and arrangements are described in section 8.3.1.1 and shown in Figures 1.2.3-2 and 1.2.3-3.

125-Volt DC Equipment

The separation of the 125 Volt DC equipment is addressed in section 8.3.2.1.1.

120-Volt AC Equipment

The vital inverters location and arrangement is described in 8.3.1.1 and shown in Figure 1.2.3-2.

Auxiliary Control Board

Shutdown from remote locations outside the main control room due to the main control room, cable spreading room, or the auxiliary instrument room becoming uninhabitable or inoperable is

performed at auxiliary control stations. This remote shutdown auxiliary control is fully described in section 7.4 and the Fire Protection Report (see 9.5.1).

Electrical Penetrations of Primary Containment

Redundant GSPS cables enter the containment via separate electrical penetrations. Where possible, redundant GSPS cables utilize electrical penetrations spaced horizontally instead of vertically. Where redundant GSPS cables are installed in electrical penetrations spaced vertically, power cables carrying high energy are located above low energy circuits, or barriers are provided between the high energy and low energy circuits where the vertical spacing is less than 3 feet. Two or more areas have been provided for electrical penetrations so that redundant GSPS cables can be installed in separate penetration areas. Cables through penetrations of the primary containment are grouped in such an arrangement that failure of all cables in a single penetration cannot prevent a RPS or engineered safety features action. The penetrations are tabulated in Figures 8.3.1-21 and 8.3.1-22.

8.3.1.4.3 Sharing of Cable Trays and Routing of Nonsafety-Related Cables

There are five different cable tray systems, namely: 6900-volt, 480- volt, control, medium-level signal, and low-level signal trays. The 6900-volt trays carry only 6900-volt cables and are located in the highest level position of stacked trays. All 480-volt power cables and power and control cable, lighting cabinet feeders, and DC power cables that have a protective device rated greater than 10 amperes are run in 480-volt trays. Old installations were limited to cables rated above 30 amperes. Medium-level signal trays carry the following cables: signal cables for inputs to and outputs from the computer other than thermocouples; instrument transmitter, recorders, RTD's greater than 100 millivolts, tachometers, and indicators; rotor eccentricity and vibration detectors; and shielded annunciator cables used with solid-state equipment. Signal cables for thermocouples, strain gauges, thermal converters, and RTD's that are 100 millivolts or less are run in low level signal trays which occupy the lowest level in a stack of trays. All other cables are run in control trays. Any exceptions to the requirements of this section are evaluated and documented in design criteria SQN-DC-V-12.2 or SQN-DC-V-11.3.

Within a division the minimum standard spacing between trays stacked vertically is 9 inches, tray bottom to tray bottom. Within a division, the minimum standard spacing between trays installed side by side is 6 inches. The trays are constructed of galvanized steel, 6 to 18 inches wide and approximately 4 inches deep. Cable tray systems are supported as described in Subsection 3.10.2.

Divisional RPS cables, inside and outside containment, are routed in cable trays and/or conduits that are designated for their respective division of separation.

ESF and ESAS cables (trains A and B) are routed in 6900-volt, 480-volt, or control trays and/or conduits that are designated for their respective division of separation.

Vital cables for the GSPS which includes the RPS and ESF may be routed in the same conduits, wireways, or cable trays provided the circuits have the same characteristics such as power supply and channel identity (I, II, III, or IV).

Automatic actuation and power circuits for the GSPS which includes the RPS, ESAS, reactor scram logic, and ESF may be routed in the same conduits, wireways, or cable trays provided the circuits have the same characteristics such as power supply and division identity.

Unit 1 and Unit 2 circuits may be routed in the same conduits, cable trays, or wireways provided the circuits have the same characteristics such as power supply and channel identity (I, II, III, or IV).

Cables for non-safety related functions shall not be run in conduit used for GSPS circuits except at terminal equipment where only one conduit entrance is available. The non-safety related

cable shall be separated from the GSPS cable as near to the terminal equipment as practical. Cables for non-safety related circuits may be run in cable trays with those for GSPS circuits with the following restrictions. When a non-safety related cable is installed in a tray with GSPS cables, it is not permissible to subsequently route that cable or any cable in the same circuit onto another tray containing a different division of separation of GSPS cables. All conduit systems (for safety related cables) located in seismic Category I structures have seismic Category I supports, and are described in Subsection 3.10.2. Under no circumstances shall GSPS cable(s) be installed in any non-safety related cable tray or conduit located in a Seismic Category I structure.

There are certain safety-related components which are located in a nonseismic structure. The circuits for these components or devices have the following separations. While in a Category I structure, these circuits are routed with train or channel circuits depending on their application. When they leave the Category I structure, these circuits have been separated physically and electrically to reduce the possibility of damage to more than one redundant circuit.

There are certain safety-related components which are powered from two redundant divisions (channels or trains) through manual transfer devices. These components include, but not limited to, the component cooling water pump C-S, and the steam turbine driven auxiliary feedwater pumps 1A-S and 2A-S. The output feeder cables from the transfer device to the component require special separation and are routed in separate conduit(s) with no other circuits with the following exception. Cables with a suffix S may be routed together provided the following two conditions are satisfied: (1) voltage levels are compatible and (2) circuits are designed such that under any design basis event, all cables in the raceway will always be of the same division (channel or train) when energized. These circuits are identified by a suffix S added to their respective conduit and cable numbers. The redundant feeder supply cables to the transfer devices are routed in separate conduit, or are separated by 6 inches of free air space or barrier provided within panels housing transfer devices, and the cables shall have divisional separation depending on the source of supply and physical location.

The GSPS receives its power supply from preferred (off-site) and the standby (onsite) sources. The normal power and control circuits from the preferred source are routed in conduits or cable trays separate from the alternate power and control circuits. These circuits are identified by a suffix S1 or S2 added to their respective cable numbers, except for the circuits involved with the primary of common station service transformer (CSST) which are identified by suffix S3.

The feeder circuits from the 125-volt vital battery boards to the control buses in the shutdown boards are separated into four divisions (Channels I, II, III, and IV). Feeder cables to the control buses in the train A shutdown boards are supplied from battery boards I and III and the feeder cables to the control buses in the train B shutdown boards are supplied from battery boards II and IV. The Channels I, II, III, and IV vital instrument power systems are supplied from vital battery boards I, II, III, and IV, respectively, and have been physically separated and routed independently from each other.

8.3.1.4.4 Fire Detection and Protection in Areas Where Cables Are Installed

Fire protection features provided in areas where cables are installed are described in the Fire Protection Report (See 9.5.1)

8.3.1.4.5 Cable and Cable Tray Markings

Field wiring (with associated conduits and cable trays) of the GSPS, which includes RPS, ESF, and Class 1E electric systems, is identified so that two facts are physically apparent to plant operating and maintenance personnel:

1. That wiring is properly identified as being associated with the GSPS and

2. That wiring is properly identified as part of a particular division (or grouping) of enforced segregation within the GSPS.

Each cable has been assigned a number consisting of a combination of letters and numbers. In addition, cables of the GSPS have been assigned special separation suffixes (A or B for train A or train B; or S for special; or I, II, III, IV for channels I, II, III, or IV, respectively).

A computerized cable routing program has been used to route and check all cables.

The main functions of this program are as follows:

1. To route and measure cables through the shortest route in a tray system

2. To maintain a predetermined maximum tray loading

3. To ensure proper separation of divisional cables is maintained on its respective tray assignment

4. To separate circuit types (high-voltage power, low-voltage power, control, signal, and thermocouple)

5. To provide installation information

6. To maintain cable inventory

7. To provide printouts of all cables routed on any tray

8. To provide printouts of all cables for a system.

Initial inputs into the computer include the cable list and the cable tray systems. The cable list includes all cable types that will be used for the project. These cable types are identified by code-mark letters. The corresponding cross-section area (based on nominal outside diameter of the cables) for each cable is also entered since the maximum tray loading is based on cross-sectional area except when a single layer of cable (or grouping of 3-phase circuits) is used. The tray system lists each section of tray, its from and to nodes, length between nodes, maximum allowable tray fill and a node voltage level code letter which identifies it for a particular circuit type. The node voltage levels for the respective cable tray system are as follows:

NV-1 - Nonsafety related low level signal cables

NV-2 - Engineered safety feature train A and B and nonsafety-related medium level signal cables

NV-3 - Nonsafety related control cables

NV-4 - Nonsafety related low-voltage power cables (480V or lower voltage with a current of 10 amperes and above)

NV-5 - Nonsafety related 6.9-kV power cables

NV-6 - Reactor protection system channel I cables

NV-7 - Reactor protection system channel II cables

NV-8 - Reactor protection system channel III cables
(The reactor protection system identification for channel III has been translated to C3 for computer programming purposes.)

NV-9 - Reactor protection system channel IV cables

NV-10 - Engineered safety features train A control cables

NV-11 - Engineered safety features train B control cables

NV-12 - Engineered safety features train A low-voltage power cables (similar to NV-4)

NV-13 - Engineered safety features train B low-voltage power cables (similar to NV-4)

NV-14 - Engineered safety features train A 6.9kV power cables

NV-15 - Engineered safety features train B 6.9kV power cables

NV-16 - Engineered safety features special control cable

NV-17 - Engineered safety features special low voltage power cable

The field wiring for the GSPS equipment and components have distinct color coded tags at terminations for each division of separation (channels or trains). The conduits, conduit boxes, and cable trays for field wiring of the GSPS equipment are color coded (by tags, nameplates, or markings on exterior surfaces) at conspicuous intervals showing their respective division of separation. The color coding scheme used to identify divisions of separation follows:

System	Division of Separation	Basic Color or Background	Letters or Engraving
Engineered Safety Features (ESF), Essential Supporting Auxiliary Systems (ESAS), and the Class 1E Diesel Generator Power Systems	Train A	Orange	White
	Train B	Brown	White
	Special*	Gold	Black
Reactor Protection System (RPS) and the Class 1E Vital AC and DC Battery Systems	Channel I	Red	White
	Channel II	Black	White
	Channel III	Blue	White
	Channel IV	Yellow	Black
Post Accident Monitoring (PAM)	PAM 1 (J cables)	Purple	White
	PAM 2 (K cables)	Green	Black

*The circuits requiring special separations are identified by a suffix S and described in Subparagraph 8.3.1.4.3.

Cable tray markings are identified by a 2- or 3-letter system. First letter designations for the different voltage levels are assigned as follows:

A through D are for 6900-volt trays
E through I are for 480-volt trays

J through S are for control trays, except Q
T and U are for low level signal trays
V and X are for medium level signal trays

The cable trays which carry cables of the generating station protection system are further physically identified by adding a suffix -A, -B, -I, -II, -III, or -IV for its respective division of separation. The markings are color coded as indicated above.

8.3.1.4.6 Spacing of Power and Control Wiring and Components Associated with Class 1E Electrical Systems in Control Boards, Panels, and Relay Racks

Redundant power and control wiring and components associated with Class 1E electrical systems in control boards, panels, and relay racks are separated by either a minimum of six inches of air space or metal barrier (braided sheath material). See paragraph 7.1.2.2 for more detail of spacing of wiring and components in control boards, panels, and relay racks. Any exceptions to the above are evaluated and documented in design criteria SQN-DC-V-12.2.

8.3.1.4.7 Separation Between Redundant Trays

The criteria for separation between redundant trays for various zones or areas of the plant is described in Subparagraph 8.3.1.4.2. Where the physical separation between redundant trays could not be attained, fire resistant barriers have been provided. This is not to be confused with the specific fire protection principles applied to equipment required for FSSD (i.e., Appendix R). General fire protection principles have been applied in protecting safety-related systems from unacceptable fire hazards. Fire barriers for safe shutdown requirements of 10 CFR 50, Appendix R and Appendix A to BTP 9.5.1 are described in the Fire Protection Report (see 9.5.1).

Cable fire stops for redundant cable tray runs through openings in floors and openings in walls between buildings have been provided. Also, fire barriers have been installed in floor openings for redundant cables entering the main control room. These barriers are described in the Fire Protection Report (see 9.5.1).

8.3.1.5 Physical Identification of Safety-Related Equipment in AC Power Systems

The onsite power system equipment is identified similar to that described in section 8.3.1.4.5.
The scheme used to physically identify major safety-related electrical equipment employs a suffix label. The suffix label added to the equipment name is -A or -B, which represents train A or train B diesel-generator power source. For example, 6900-volt shutdown board 1A-A is safety-related equipment, where the 1 indicates Unit 1, the A represents board A, and the -A is assigned to train A.

The 125-volt DC vital system is shared between both units and divided into four channels. The 125-volt vital charger, 125-volt vital battery board, and 125-volt vital battery of each channel is physically identified in its label by I, II, III, or IV, respectively.

The 120-volt AC vital instrumentation and control power system is divided into four channels. Four each of the 120-volt AC vital inverters and vital instrument power boards are identified by Unit 1 or 2 prefix and a -I, -II, -III, or -IV suffix, respectively. For example, 120-volt AC vital instrument power 1-I is safety-related equipment, where the 1 indicates Unit 1, and the -I is assigned to channel I.

Nameplates, tags, or markings on exterior surfaces of this equipment are color coded respective to its division of separation as described in Subparagraph 8.3.1.4.5, except in the unit control and auxiliary (backup) control rooms. The mimic buses or modules on these boards are color coded by systems. The component nameplates on exterior surfaces of the panels or boards in these rooms are white background with black letters except for the Post-Accident Monitoring System components in the Unit Control Room (UCR). The component nameplates on exterior surfaces of the panels associated with the Post-Accident Monitoring System in the Unit Control

Room shall be as described in Section 7.5.2.3. To indicate to the operator that a component in these rooms is safety related, an appropriate symbol is added to those applicable nameplates. The symbol is

for train A, for train B.

The component nameplates on exterior surfaces of the boards in the unit control and auxiliary (backup) control rooms have the same color scheme for compatibility. The face plates on control switch modules and the mimic buses are color coded distinctly for each mechanical or electrical system for TVA standard operational convenience. To further divide operational systems into divisional colors would require twice as many colors, would be confusing, and would offer very little operational information to the operator. The reason for adding the unique symbol on an exterior nameplate is to readily identify to the operator which division of separation that component is assigned. However, termination of field wiring inside these boards is color coded by its respective division of separation as defined in Subparagraph 8.3.1.4.5. In addition, the enclosed wireways for board wiring and wire bundle groupings of board wiring are similarly marked.

The physical identification of the field wiring (with associated conduits and cable trays) for the onsite power system equipment is described in Subparagraph 8.3.1.4.5, cable and cable tray markings.

8.3.2 Direct Current (DC) Power System

8.3.2.1 Description

8.3.2.1.1 Vital 125V DC Control Power System

The vital 125-volt DC control power system is a Class 1E system whose safety function is to provide control power for engineered safety features equipment, emergency lighting, vital inverters, and other safety related DC powered equipment for the entire plant. The system capacity is sufficient to supply these loads during normal operation and to permit safe shutdown and isolation of the reactor for the loss of all AC power condition. The system is designed to perform its safety function subject to a single failure.

System Design Requirements

The requirements described below were implemented in the design of the Vital DC Power system.

Redundancy

The system is composed of four redundant channels (I, II, III, and IV). These four channels are used to provide emergency power to the four vital 120V AC inverters per unit which supply control power to the reactor protection system. Other loads are either two divisional or nondivisional loads. No automatic connections are used between the four redundant channels.

Separations

The four channels are electrically independent and physically separated so that a single failure in one channel will not cause a failure in another channel. Each channel has a charger, a battery, and a load distribution board.

Each 125-volt vital battery is separated from all other 125-volt vital batteries by providing individual rooms for each battery with 8 inch reinforced concrete block walls extending to the ceiling. The ventilation system is designed to remove and dissipate the hydrogen given off by the batteries (see Section 9.4). The 125-volt battery chargers (6-one per battery and two

spares) are physically separated from each other. Each 125-volt vital battery board is separated from all other 125-volt vital battery boards by 8 inch reinforced concrete block wall extending to the ceiling. The location of these batteries, chargers, and boards is shown in Figures 1.2.3-2 and 1.2.3-3.

The fifth vital battery is similarly separated from the other vital batteries. The fifth vital battery system has manual transfer switches that allow it to replace any of the other four batteries.

Capacity

Each battery charger has the capacity to continuously supply the normal, or the SBO (DB accident) loads and maintain the battery in a fully charged condition. With the batteries in the fully charged condition each battery has the capacity to supply the connected loads for 45 minutes and to supply a load reduced for Station Blackout (loss of all ac power) for an additional 195 minutes. The total connected loads are analyzed with a diversity factor. This capacity is available at the battery's end of qualified life and with the cell electrolyte at the minimum design temperature of 60° F. The primary vital batteries and vital battery V are designed to an end voltage of 1.75 volts per cell with 60 cell and 62 cell configurations, respectively. The primary vital battery is composed of 60 cells and Vital Battery V is composed of 62 cells. The additional two cells in Vital battery V makes up for the additional voltage drop involved in connecting it to a primary vital battery board. The manufacturer's ratings adjusted for minimum design cell temperature and battery end-of-life per guidance in IEEE Standard 485 is the basis for sizing the battery. The vital batteries are tested periodically to verify that the battery can supply the currents required to meet the loading requirements. The battery is tested per IEEE-450 and the results compared to the vendor capacity ratings. This rating was confirmed by TVA acceptance tests.

Charging

The normal and spare chargers have the capacity to continuously supply the normal loads and maintain the batteries in the design maximum charged state or to recharge the batteries from the design discharge state within an acceptable time interval, while supplying the normal loads. Each charger may be replaced by a spare charger. One spare charger is provided for each two normal chargers.

Vital battery V charger (non 1E) is sized exclusively to maintain vital battery V at float voltage when this battery is not in service.

Ventilation

Each battery room has redundant ventilation systems to prevent the accumulation of explosive gases. In addition to the ventilation systems provided to prevent accumulation of the hydrogen produced by the battery, there are voltmeters, high voltage alarms, and administrative procedures for control of equalizing charges that will provide additional protection. Also as an added precaution all cells are of the sealed type and have an explosion-proof vent that is designed to prevent the ignition of gases within the cell from a spark or flame outside the cell.

Vital Battery Loading

Loads are assigned according to their divisional requirements. Loads requiring four divisions of separation are assigned to the four channels. Loads requiring two divisions of separation are assigned to Channels I or III and II or IV. Two divisional loads primarily associated with Unit 1 are assigned to Channels I and II, while those primarily associated with Unit 2 are assigned to channels III and IV. The nondivisional load assignments are distributed among the four channels.

Each channel supplies the following types of loads: control circuits for the shutdown boards, relay panels, solenoid valve fuse panels, emergency lighting cabinets, inverters, annunciators, and panels associated with reactor instrumentation and control systems. Loads are assigned

according to the divisional requirements. The divisional loads primarily associated with Unit 1 are assigned to Channels I and II while loads primarily associated with Unit 2 are assigned to Channels III and IV. Nondivisional loads primarily associated with Unit 1 are assigned to Channels I or II. Similarly nondivisional loads associated with Unit 2 are assigned to Channels III or IV. Nondivisional loads that are primarily associated with plant common services are distributed among the four channels. Some loads have a normal and alternate feeder. The normal feeder is from one channel while the alternate feeder is from another channel. The transfer of the loads between the two feeders is manual and is interlocked to prevent paralleling the redundant power sources.

Due to the requirements of 10 CFR 50.63, the SQN safety related DC power system is required to mitigate a SBO event for four hours. The four hour duty cycle necessitates the stripping of loads. Loads are stripped from the vital battery before 45 minutes into a station blackout event. Forty five minutes is sufficient for the operators to recognize that a SBO is in progress and to dispatch operators to the vital battery board rooms to switch off designated circuit breakers. Certain loads in the station battery rooms are removed prior to 45 minutes into the SBO event. The SQN power system has been analyzed for the SBO event and those circuits that are necessary to mitigate the event and to restore off-site power when it becomes available are maintained. SQN also retains sufficient instrumentation to monitor the condition of the reactor core so that in the event that core damage becomes likely, the containment can be isolated.

Nonsafety related loads are supplied from the Class 1E distribution board. The feeders for these loads have circuit breakers located in the distribution board to automatically isolate a faulted feeder from the system.

Most of the DC loads (during battery recharge following an AC outage the inverters and lighting loads are supplied from AC power) for each channel are supplied from a battery charger when it has either normal or standby AC power available from the 480-volt shutdown boards. If the normal charger is unavailable, the loads are supplied from either the associated battery or a spare charger which can be manually connected to the battery board.

Tests and Inspections

The 125-V DC control power system is periodically tested and inspected to assure the continued adequacy of the system to perform its intended function throughout the life of the plant. The system is equipped with ground detection and instrumentation to continuously monitor the system.

Periodic surveillances are performed on the batteries pilot cells to verify the electrolyte temperature is greater than 60 degrees F, and on each connected cell that the electrolyte level is greater than the minimum level indication mark and less than or equal to 1/4 inch above the maximum level indication mark to ensure compliance with Technical Specifications (Reference 3).

Identification

Equipment identification for DC is identical to AC equipment as discussed in Paragraph 8.3.1.5.

Load Time of Application

The vital battery system capacity and load time is addressed in the Capacity and Vital Battery Loading parts of this section. Manual load stripping is utilized to cope with a SBO.

System Structure

The configuration of the DC control power system is shown on Figure 8.1.2-2. Each channel is ungrounded and incorporates ground detection devices, with alarm in the main control room.

Physical Arrangement of Components

The battery boards, vital chargers, vital batteries, and diesel generator batteries comprising the DC power system are arranged to provide adequate physical isolation and electrical separations to prevent common mode failures. The analysis verifying the adequacy of independence appears in Paragraph 8.3.2.2. The specific arrangement of components is discussed below.

125-VOLT VITAL BATTERIES I, II, III, AND IV Reference: Figure 1.2.3-2

These batteries are located in individual rooms on elevation 749 of the auxiliary building. The heating and ventilating systems are described in section 9.4.

VITAL BATTERY V Reference Figure 1.2.3-2.

The fifth vital battery is located on elevation 749 of the Auxiliary Building. The fifth vital battery system meets the technical specification requirements when a normal battery is out of service. The fifth vital battery with 62 cells responds identically to the normal batteries with 60 cells. With one cell removed, the fifth vital battery has slightly, but not significantly, more capacity than the normal batteries.

The fifth vital battery is a subsystem of the 125 V Vital DC Power System and comprises a battery, non-safety related charger, a battery board and two distribution panels, cabling and conduits. The vital battery system is shown in key diagram format in figure 8.1.2-2.

Electrical separation between the fifth vital battery and the normal batteries is provided by circuit breakers located in each normal battery board and a transfer switch at the fifth vital battery board. Refer to the section on the Vital Battery Board V for more information on breaker operation. These panels contain additional transfer switches which are normally maintained open. System operation is completely manual and the conduits and cables are designated -S (special) division of separation. The interconnecting cables are routed independently of all other trains and divisions of separation.

125-VOLT VITAL BATTERY BOARDS I, II, III, IV, AND V Reference Figures 1.2.3-2 and 1.2.3-3

Battery boards I, II, III, & IV are located in individual rooms on elevation 734.0 of the auxiliary building. Board V is also located in the Auxiliary Building in a room on elevation 749. The heating and ventilating system is described in section 9.4.

125-VOLT DIESEL GENERATOR BATTERIES 1A-A, 1B-B, 2A-A AND 2B-B Reference: Figure 1.2.3-17

These batteries are located in individual rooms on elevation 722.0 of the diesel generator building. They are located in the room with the diesel generator with which each is associated. Each battery is equipped with its own exhaust hood located directly over it. The heating and ventilating system for the diesel generator rooms is described in section 9.4.

Normal DC Supply (Reference 3)

The normal supply of DC current to the battery boards is from the battery charger in each channel. Each charger maintains a floating voltage of approximately 135 volts on the associated battery board bus (the battery is continuously connected to this bus also) and is capable of maintaining 140 volts during an equalizing charge period (all the loads have been specified and designed to operate at the 140 volt equalizing voltage). The charger supplies normal load demand on the battery board and maintains the battery in a charged state. Optimal long term performance is obtained by maintaining a minimum float voltage of 129 V DC. This voltage is greater than the 2.13 V per connected cell in the 60 connected cell battery. This provides adequate over-potential, which limits the formation of lead sulfate and self

discharge. Normal recharging of the battery from the design discharged condition can be accomplished in 12 hours (with accident loads being supplied) following a 30-minute AC power outage and in approximately 36 hours (with normal loads being supplied) following a 4-hour AC power outage. Per the vendor (see reference 2), after a discharge, when the float current drops to less than or equal to 2 amps, the battery should be at least 98% charged. A 98% charged battery maintains at least a 5% design margin. Two spare chargers are available for the four channels (one each for two channels). It can substitute for or operate in parallel with the normal charger in that channel.

Each charger is provided with manual transfer facilities to connect either a normal or an alternate AC input source. The normal and alternate sources are so arranged such that a loss of a single emergency

AC onsite power supply does not leave a charger without an AC input source. Each charger is equipped with a DC voltmeter, DC ammeter, and charger failure alarm. Malfunction of a charger is annunciated in the main control room. Each charger is powered from the 480V shutdown boards (normal and alternate) which upon loss of normal power are energized from the standby power system.

The charger is a solid-state type which converts a three-phase 480-volt AC input to a nominal 125-volt DC output having a rated capacity of at least 150 amperes. Over this output current range the DC output voltage will vary no more than ± 1.0 percent for a supply voltage amplitude variation of ± 7.5 percent and frequency variation of ± 2.0 percent.

Some operational features of the chargers are: (1) an output voltage adjustable over the range of at least 129 to 140 volts, (2) equalize and float modes of operation (the charger normally operates in the float mode, but can be switched to the equalize mode), (3) a current-limit feature which limits continuous overload operation to 125 percent of rated output, (4) protective devices which prevent a failed charger from discharging its associated battery and protect the charger from external overloads, (5) metering and alarm circuits to monitor the charger output, (6) parallel-operation capability.

The fifth vital battery charger is never used as the normal supply to battery boards I, II, III, or IV. It only maintains fifth vital battery when it is not in service.

Emergency DC Supply

The emergency supply of DC current to each distribution board is from its associated vital battery or Vital Battery V. There are four vital batteries for the plant--one associated with each channel. The vital batteries supply the entire plant safety-related DC load in the event the normal power source is unavailable. With normal power unavailable and one battery out of service, the three remaining vital batteries are capable of supplying continuously for 30 minutes all loads required for safe shutdown of both units. The batteries also have the capability to supply the essential loads required to maintain the plant in a safe shutdown condition for four hours following a loss of all normal and standby AC power, but no accident. Each battery is normally required to supply loads only during the time interval between loss of normal feed to its charger and the receipt of emergency power to the charger from the standby diesel generator.

Vital Battery V may be the emergency DC supply (See discussion in section on Vital Battery Board V).

Vital Battery Boards I, II, III, and IV

Battery board I to IV consists of four metal-enclosed panels. Mounted on these panels are: the main distribution bus, battery and charger input buses, load group fuses, load group buses, subdistribution circuit breakers, and various instruments for monitoring board loading.

Each subdistribution circuit breaker is coordinated to its load group fuse. Each load group fuse is coordinated to the 1600-ampere battery supply fuse. The charger input fuses are coordinated to the battery supply protective devices. The purpose of this coordination scheme is to prevent a fault on one subdistribution or charging feeder causing a loss of the emergency supply.

The variation in fuses is based on the individual circuit breaker trip settings, or ratings for all devices, which are shown in Figure 8.3.2-1.

All circuit breakers have trip alarm contacts to alert the control room operator of a tripped breaker. The ground indicator has an alarm contact to warn the operator of a distribution system ground. Metering on the distribution board includes: battery current, bus voltage, main and spare charger voltage, board charging current, and ground current. Metering for battery current and bus voltage are also located on the main control board. Battery discharge alarm is provided in the MCR.

Vital Battery Board V

This board consist of two metal enclosed panels. Mounted on these panels are: the main distribution bus, battery and charger input circuit breakers, battery board main breaker and fuse, one transfer switch and various instruments for monitoring the board.

The fifth vital battery board is used to connect the vital battery V to a normal vital battery board when the corresponding normal battery is out of service for any reason. For this purpose there is a transfer switch composed of two inter-connected non-automatic circuit breakers separated by a metallic barrier. One breaker is connected to a distribution panel which is associated with vital battery boards I and III and the other breaker is connected to a distribution panel which is associated with vital battery boards II and IV. These breakers are normally open and provide isolation between the two panels. Refer to Figure 8.1.2-2 for a functional key diagram of the system and the normal vital battery interfaces. During periods when the fifth vital battery is in service, the circuit breaker connecting the fifth vital battery charger is maintained in the open position.

Tests and Inspections

Prior to placing the vital DC system in operation, the system components were tested to ensure their proper operation.

The batteries are tested during preoperational testing by discharging them with a load which simulates their loading during an AC power outage. The test is performed in accordance with IEEE-450, Recommended Practice for Maintenance, Testing and Replacement of Large Stationary Type Power Plant and Substation Lead Storage Batteries. The actual discharge current for the test is determined using the worst case load data. The basis for each actual individual load current value is either the measured value from actual test or a value calculated from manufacturer's data.

The charger will be checked for normal and equalizing voltage adjustability, 100 percent output capability, specified regulation with and without the battery connected, and panel instruments calibration. For the distribution board, circuit breakers are tested for proper trip operation, fuses are checked to verify that the sizes and types specified have been installed, and the board instruments are calibrated.

8.3.2.1.2 Nonsafety Related DC Power Systems

There are three nonsafety related DC power systems: (1) the 24-volt DC Power Distribution System, (2) the 48-volt DC Power Distribution System containing a 48-volt Telephone Battery and a 48-volt Plant Battery, and (3) the 250-volt DC Power Distribution System. These systems supply power primarily for balance-of-plant systems.

24-Volt DC Power Distribution System

This system consists of: a 12-cell lead-acid battery, two 24-volt battery chargers, a 200 amp power board, and 24-volt DC distribution panels.

48-Volt DC Power Distribution System

This system consists of: a 24-cell lead-acid battery, a 24-cell lead-acid telephone battery, a 48-volt plant battery charger, a 48-volt telephone battery charger, a 48-volt spare battery charger that can be substituted for either a plant or telephone battery charger, a 48-volt plant battery board, a 200 amp power board for the telephone battery, and separate 48-volt DC distribution panels for the telephone and plant battery loads. The telephone battery provides power to telephone and other communication equipment. The plant battery provides power for 161-kv and 500-kv line carrier equipment and for data logger and data acquisition equipment. Loads supplied by this system are not safety related.

250-Volt DC Power Distribution System

This system consists of: a 120-cell lead-acid battery and connected battery board primarily associated with Unit 1, a 120-cell lead-acid battery and connected battery board primarily associated with Unit 2, a 250-volt battery charger for the battery primarily associated with Unit 1, a 250-volt battery charger for the battery primarily associated with Unit 2, a spare 250-volt battery charger that can be substituted for either of the other two chargers, and distribution panels for system loads. The batteries provide power for loads such as the preferred and TSC inverters, turbo-generator auxiliaries, controls for 6.9-kv and 480-volt non safety related boards, and switchyard control and relaying equipment. Circuits supplying switchyard control power are discussed in Paragraph 8.2.1.4.

The mission of the 250 V DC Power System during a SBO event is to provide control power to re-connect off-site power to the safety related shutdown busses when it becomes available in the switchyard. The battery with manual load stripping has the capacity to operate the required controls at the end of a four hour SBO event. This capability is verified by analysis.

Testing

The 250 V Station Battery is covered by an augmented QA program to ensure that the battery will function during a SBO event. The battery will be tested per guidance in IEEE-450 and industry standards to assure the capability of meeting the Station Blackout requirements.

8.3.2.2 Analysis of Vital 125-Volt DC Control Power Supply System

The 125-volt DC Class 1E electrical systems were designed, components fabricated, and installed meeting the requirements of the NRC 10 CFR 50 General Design Criteria, IEEE Standard 308-1971, NRC Regulatory Guides 1.6, Rev. 0, 1.9, Rev. 0, and 1.32, Rev. 0, IEEE Standard 336-1971, and other applicable criteria as enumerated herein.

The system consists of five lead-acid-calcium batteries, six 150-ampere (minimum) battery chargers, five battery boards, two distribution panels, cable and hardware. Each battery board is supplied normally from its battery charger and from its corresponding battery (or vital battery V) during an emergency. However, there are two spare chargers for supplemental and/or backup capacity. Each spare charger is connected so as to be available for use on either of two of the distribution boards for supplying load or charging the batteries. A manually operated switch transfers the spare charger from one board to another, and it is interlocked to prevent accidental parallel connection of the vital power systems. Whenever the vital battery V is substituting one of the normal batteries, the spare charger associated with the normal battery will be used as the system charger as long as the normal battery is out of service.

Battery boards I, II, III, and IV are each located in separate rooms in a seismic Category I structure, and they are protected from potential missile hazards. The batteries are located in separate rooms, and the chargers are physically separated in two separate rooms of this same building. Vital battery V, vital battery board V and the vital charger V are located in the

Auxiliary Building at El. 749. Fifth Vital Battery Distribution boards are located in the Auxiliary Building at El. 734. The fifth vital battery and its distribution equipment are located in a mild environment. Therefore, this equipment will not be exposed to hostile environments and since it is outside the primary containment area, it will not be exposed to significant radiation due to a LOCA. Battery board V is separated from all the normal vital batteries so that no single occurrence can affect more than a single battery. Thus the system design, equipment location, separation, and redundancy assure ability to meet the requirements for the applicable accident events described and evaluated in Chapter 15 and is in full compliance with NRC General Design Criteria 17 and Regulatory Guide 1.6, Rev. 0.

The normal power source to each distribution board is from the battery charger which is supplied from either one of two 480-volt AC shutdown distribution boards. The battery serves as an emergency source in the event the battery charger source is lost or is inadequate for the load required. The total design load for each board with 480-volt AC available is less than the battery charger rating. Therefore, the primary charger supplying each board is of more than ample capacity to supply load currents and maintain full charge on the battery. Since each battery has an emergency two hour rating of 643 amperes minimum at 60°F with a minimum of 105 volts DC at the battery terminals and since the vital battery V has an emergency two hour rating of 663 amperes at 60°F with a minimum of 108.5 DC volts at the battery terminals, and the startup time on the diesels is 10 seconds or less, the battery capacity far exceeds the maximum design load requirements for each board. Also, based on the rating of vital battery V, whenever a normal vital battery is out of service and vital battery V and the spare vital charger are the emergency and normal power supplies respectively, the system capacity and capability are not degraded.

The overall design of the system (including batteries, chargers, distribution boards, and cabling) incorporates sufficient capacity and capability to deliver the maximum design load currents required at each remote point and also to clear any possible short-circuit fault currents.

The load demand from each of the four battery boards can be grouped into essentially three categories for analysis purposes. These are (1) the vital inverters, (2) 6900- and 480-volt shutdown board control power, and (3) miscellaneous control and instrumentation load. The output fuse and breaker trip ratings and trip times are coordinated to provide protection and isolation for the cable leaving the board as well as providing protection for the end load service.

Referring to Figure 8.1.2-2, it can be seen that each of the three groups of loads are supplied from the main bus through a fuse to a "stub" bus from which the power is delivered to each load circuit via a molded-case automatic circuit breaker. Each stub bus may supply one or more breakers (Figure 8.3.2-1). Each breaker and fuse has a current capability of the battery and charger combined. Each breaker and fuse is sized in accordance with circuit requirements. The interposing fuse between the main and stub buses not only provides high-speed clearing for a very severe close-in feeder fault, but it also provides redundant protection of the feeder in the event an associated breaker fails to operate, thus preventing a single feeder fault resulting in the loss of the entire bus. The fuse is likewise coordinated with the main bus supply protective devices. The one panel of the distribution board that is devoted entirely to fused load circuits is powered from the main bus through a molded-case breaker which provides redundant protection and serves as an isolating disconnect switch.

The vital chargers are rated for a load duty as dictated by the battery board distribution and battery charging requirements. The output load of the charger is delivered through a 2-pole molded-case breaker that is capable of interrupting the battery backfeed into the charger if necessary. The trip setting of the breaker is chosen to permit the charger to operate at its maximum output capability without experiencing a false trip. The electrical characteristics of the charger provide the necessary output power regulated and filtered as required by the load for the worst maximum and minimum input power conditions. The charging capacity exceeds that required to restore the battery from the design minimum charge state to the fully-charged state under worst case load conditions in compliance with Regulatory Guide 1.32, Rev. 0. The input circuit of the charger is protected from the source power by a

molded-case breaker that also serves as an isolating or disconnect switch. The manually-operated transfer switch through which the power is delivered is interlocked in such a manner so as not to parallel the two shutdown boards in compliance with Regulatory Guide 1.6, Rev. 0. NOTE: The fifth vital battery charger is used only to maintain battery V and is not subject to the above discussion.

Surveillance and Monitoring

Each distribution board and charger is equipped with the proper instruments to provide visual indication of the necessary electrical quantities. An alarm contact is provided on all circuit breakers on the distribution board that close for automatic opening of the breaker. Circuits important to safety which do not have alternate means for blown fuse detection will have indicating fuses for alarm annunciation. Other circuits, both safety-related and non-safety related which are fed from the DC distribution panel may use non-indicating fuses. These circuits are monitored either by status lights in the control room, system responses (i.e., changes in level, temperature, flow, pressure, etc.), or other indicators for blown fuse detection. Additionally, non-indicating fuses may be used on circuits that go to the fail-safe condition, or circuits that are used on demand and the time to replace the fuse is not critical, or circuits which have routine existing surveillance instructions which would detect a blown fuse. Also, non-safety related circuits may contain non-indicating fuses depending on the importance of the circuit to plant operation. The indicating means for blown fuse detection, other than indicating fuses meet the requirements of IEEE 308-1971. Undervoltage alarm relays provide annunciation for loss of power on the buses or power input to the chargers. Relays which detect a no-charge condition are provided on the chargers to detect a charger failure. Closure of any contact provides annunciation in the main control room.

The overall system design (including function requirements, redundancy, capability, availability, surveillance, and energy storage capacity) is in full conformance with IEEE 308-1971, Criteria for Class 1E Systems.

Seismic Qualification

One complete board assembly and one complete battery charger assembly have been subjected to the SSE conditions as described in Section 3.10. The tests were performed in conformance to IEEE Standard 344-1971, Guide for Seismic Qualification of Class 1 Electric Equipment. One breaker of each type used on the equipment was operated under simulated fault conditions at the same time the assembly was experiencing the seismic forces. The seismic test results assure that the complete assembly will continue to function properly and continue to deliver the required power during and after any expected SSE condition.

Design Test

All battery chargers were electrically tested to assure that each unit is capable of performing all requirements as specified. All boards were subjected to and satisfactorily passed the following tests as specified under the indicated paragraphs of section 20-5 of ANSI C37.20-1969:

20-5.2.1.1 - Power Frequency Withstand
20-5.2.2 - Rated Continuous Current
20-5.2.3 - Momentary Current
20-5.2.8 - Flame Resistance for Barrier, Bus, and Wire Insulation
20-5.3.2 - Mechanical Operation
20-5.3.4.1 - Control Wiring Continuity
20-5.3.4.2 - Control Wiring Insulation

All molded-case circuit breakers comply with NEMA Publication No. AB-1-1964 requirements, and all drawout low-voltage circuit breakers comply with NEMA Publication No. SG3-1965.

All control circuit wiring has self-extinguishing insulation rated 600 volts. All equipment is certified to operate within the environmental requirement called for in the Design Criteria. (Refer to Section 3.11).

Quality Assurance

A Quality Assurance program implemented from the beginning of the specification for this equipment and continued throughout installation and final checkout assures that the equipment meets all applicable design and operable criteria. The specifications require that suppliers of this equipment maintain a Quality Assurance Program throughout the duration of the contract and that the program conform to the essential elements as defined in NRC Appendix B of 10 CFR, Part 50. An inplant examination of each contractor's Quality Assurance Program assures compliance with these requirements. The design, specification, and any design changes are reviewed by designated staff engineers to assure compliance with Quality Assurance procedures and design criteria. All records, drawings, test reports, etc., depicting quality assurance review are maintained in appropriate files in accordance with established procedures.

8.3.2.3 Conformance with Appropriate Quality Assurance Standards

Conformance with appropriate quality assurance is described in Chapter 17 and the TVA Nuclear Quality Assurance Plan.

8.3.2.4 Independence of Redundant DC Power Systems

The treatment of the redundant onsite DC power systems is included in paragraph 8.3.1.4 with the onsite AC power systems.

8.3.2.5 Physical Identification of Safety-Related Equipment in DC Power Systems

The physical identification of the onsite DC power systems is combined with the onsite AC power systems and is described in paragraph 8.3.1.5.

8.3.2.6 Sharing of Batteries Between Units

The safety loads are assigned to the vital 125-volt batteries so that such sharing will not significantly impair their ability to perform their safety functions, including in the event of an accident in one unit, an orderly shutdown and cooldown of the remaining unit.

The 125-volt DC power required for engineered safety features is arranged as follows:

Unit 1 "A" Train - Vital Battery I
Unit 1 "B" Train - Vital Battery II
Unit 2 "A" Train - Vital Battery III
Unit 2 "B" Train - Vital Battery IV

Four channel 120-volt AC vital instrument power is supplied from eight (four per unit) uninterruptible power supply units. The normal input to these units is supplied from the 480-volt shutdown system with backup supply coming from the vital batteries. The 480-volt AC input is rectified and biased against the dc by means of an auctioneered diode circuit to permit use of the battery source only if the AC input voltage is lost.

The safety loads supplied from these units have been grouped as follows:

Unit 1, Channel I - Unit 1 RPS Channel I input relays, ESF "A" Train output relays.

Unit 1, Channel II - Unit 1 RPS Channel II input relays, ESF "B" Train output relays.

Unit 1, Channel III - Unit 1 RPS Channel III input relays.

Unit 1, Channel IV - Unit 1 RPS Channel IV input relays.

Unit 2, Channel I - Unit 2 RPS Channel I input relays.

Unit 2, Channel II - Unit 2 RPS Channel II input relays.

Unit 2, Channel III - Unit 2 RPS Channel III input relays, ESF "A" Train output relays.

Unit 2, Channel IV - Unit 2 RPS Channel IV input relays, ESF "B" Train output relays.

Devices that require power to actuate are normally assigned to Channels I and II for Unit 1 and Channels III and IV for Unit 2. RPS inputs are assigned to all channels.

The loss of major safety loads due to vital 125V DC battery loss concurrent with loss of offsite power is shown in Table 8.3.2-1.

Conformance with General Design Criteria, Regulatory Guides, and Branch Technical Position.

GDC 5	The failure of a vital battery does not significantly impair the ability of systems and components important to safety to perform their safety functions, including in the event of an accident in one unit, an orderly shutdown and cooldown of the remaining units.
RG 1.6	There are no provisions for automatically connecting one load group to another load group. There are no provisions for automatically transferring loads between redundant load groups.
RG 1.81 and BTP EICSB 7	The design of the Sequoyah 125-volt vital DC system meets all the requirements for multi-unit generating stations for which construction permit application were made before May 1, 1973, as described in RG 1.81 and BTP EICSB 7.

8.3.3 <u>References</u>

1. Design Criteria SQN-DC-V-11.3 R16, “Power, Control, and Signal Cables for use in Category 1 Structures.”

2. LAR SQN-TS-11-10, Supplement 2, RAI GMW002 Response.

3. LAR SQN-TS-11-10, Supplement 2, Enclosure 9, List of Final Safety Analysis Report (FSAR) Descriptions for TSTF-500 and TSTF-400.

TABLE 8.3.1-1

SHUTDOWN BOARD LOADS AUTOMATICALLY STRIPPED FOLLOWING A LOSS OF NUCLEAR UNIT AND PREFERRED (OFFSITE) POWER

Equipment Name	Quantity	HP or kw**	Power Train 2B	2A	1B	1A
Pressurizer Heaters Backup Group	4	485kw	x	x	x	x
Pressurizer Heaters Control Group ***	4	****415kw	x	x	x	x
Containment Spray Pump	4	700	x	x	x	x
Centrifugal Charging Pump	4	600	x	x	x	x
Essential Raw Cooling Water Pump	8	700	xx	xx	xx	xx
Safety Injection Pump	4	400	x	x	x	x
Auxiliary Feedwater Pump	4	500	x	x	x	x
Residual Heat Removal Pump	4	400	x	x	x	x
Component Cooling System Pump	4	350	x	x	x	x
Component Cooling System Pump (Spare)	1	350	x----------or		----------x	
Spent Fuel Pit Pump	3	100	x	x-or-x		x
Cont & Service Air Compressor	2	125			x	x
Fire/Flood Mode Pump	2	200	x			x
Turbine Turning Gear Oil Pump	2	75	x			x
Building General Supply Fan	4	150	x	x	x	x
Aux Building General Exhaust Fan	4	125	x	x	x	x
Fuel Handling Area Exhaust Fan	2	100			x	x
Aux Building Vent Board 2	4	-	x	x	x	x
Reactor Vent Board	4	-	x	x	x	x
Electric Board Room AHU*	2	75	x	x		
Control Room AHU*	2	60			x	x

*Automatically stripped only on a Phase B

** Rated Nameplate Values

*** There are a total of four (4) non-safety related group heaters. They are referred to as control groups 1D and 2D, respectively, on 6900V Shutdown Boards 1A-A and 2A-A and as Backup Groups 1C and 2C, respectively, on 6900V Shutdown Boards 1B-B and 2B-B.

**** 415kw for Heaters 1C, 1D, 2D. 345kw for Heater 2C.

TABLE 8.3.1-2

DIESEL GENERATOR MAJOR LOADS SEQUENTIALLY APPLIED FOLLOWING A LOSS OF NUCLEAR UNIT AND PREFERRED (OFFSITE) POWER (1) (2)

Equipment Name	Time in Seconds*	Starting kVA	Load Applied Nonaccident Condition	Load Applied Accident Condition
480V Shutdown Loads (3)	0	5132	Yes	Yes
Centrifugal Charging Pump	2	3601	Yes	Yes
Safety Injection Pump	5	2458	No	Yes
Residual Heat Removal Pump	10	2401	No	Yes
Essential Raw Cooling Water Pump	15	3852	Yes	Yes
Auxiliary Feedwater Pump	20	3201	Yes	Yes
Component Cooling System Pump**	30	3541	Yes	Yes
Pressurizer Heaters Backup Group	90	485 kW	Yes	No
Containment Spray Pump***	180	4058	No	Yes
Control Room Air Handling Unit****	220	336	N/A	Yes
Electric Board Room Air Handling Unit****	240	420	N/A	Yes

* Time is measured from the time of closing of the breaker which connects the diesel generator to the power train. Values given are nominal times. Actual times are consistent with the diesel generator loading analyses and will be verified during preoperational testing.

** Diesel generator 1A or 2B will have two component cooling system pumps loaded (see Table 8.3.1-3, Loads Having Manual Transfer Between Power Trains)

*** Only sequential loaded following a Containment Spray Actuation Signal.

**** Only stripped for a Phase B

(1) For load nameplate horsepower, see the single line diagram.

(2) The Diesel Generator Load Analysis Calculation, SQN-E3-002, has evaluated the ability of the diesel generators to start and accelerate for all design basis events.

(3) Representative block loading of approximately 1100 hp; see Diesel Generator loading analysis for calculated load.

TABLE 8.3.1-3

LOADS HAVING MANUAL TRANSFER
BETWEEN POWER TRAINS

Load	Normal Supply	Alternate Supply
125V Bat. Chgr I & Inverters	480V Shutdown Bd 1A1-A	480V Shutdown Bd 1B1-B
125V Bat. Chgr II & Inverters	480V Shutdown Bd 1B2-B	480V Shutdown Bd 1A2-A
125V Bat. Chgr. III & Inverters	480V Shutdown Bd 2A1-A	480V Shutdown Bd 2B1-B
125V Bat. Chgr. IV & Inverters	480V Shutdown Bd 2B2-B	480V Shutdown Bd 2A2-A
125V Spare Bat. Chgr 1-S	480V Shutdown Bd 1A2-A*	480V Shutdown Bd 1B1-B*
125V Spare Bat. Chgr 2-S	480V Shutdown Bd 2A2-A*	480V Shutdown Bd 2B1-B*
Component Cooling System Pump C-S	480V Shutdown Bd 2B2-B	480V Shutdown Bd 1A2-A
Spent Fuel Pump C-S	480V Shutdown Bd 1A1-A	480V Shutdown Bd 1B2-B

*These boards are neither the normal nor alternate supply for the spare battery chargers but are the available boards from which the loads can be supplied.

TABLE 8.3.1-4

SAFETY-RELATED STANDBY (ONSITE) POWER SOURCES AND DISTRIBUTION BOARDS

Unit 2		Unit 1	
Power Train B	Power Train A	Power Train B	Power Train A
Diesel Gen 2B-B	Diesel Gen 2A-A	Diesel Gen 1B-B	Diesel Gen 1A-A
6.9-kV Shtdn Bd 2B-B	6.9-kV Shtdn Bd 2A-A	6.9-kV Shtdn Bd 1B-B	6.9-kV Shtdn Bd 1A-A
480V Shtdn Bd 2B1-B	480V Shtdn Bd 2A1-A	480V Shtdn Bd 1B1-B	480V Shtdn Bd 1A1-A
480V Shtdn Bd 2B2-B	480V Shtdn Bd 2A2-A	480V Shtdn Bd 1B2-B	480V Shtdn Bd 1A2-A
Reactor MOV Bd 2B1-B	Reactor MOV Bd 2A1-A	Reactor MOV Bd 1B1-B	Reactor MOV Bd 1A1-A
Reactor MOV Bd 2B2-B	Reactor MOV Bd 2A2-A	Reactor MOV Bd 1B2-B	Reactor MOV Bd 1A2-A
Cont & Aux Bldg Vent Bd 2B1-B	Cont & Aux Bldg Vent Bd 2A1-A	Cont & Aux Bldg Vent Bd 1B1-B	Cont & Aux Bldg Vent Bd 1A1-A
Cont & Aux Bldg Vent Bd 2B2-B*	Cont & Aux Bldg Vent Bd 2A2-A*	Cont & Aux Bldg Vent Bd 1B2-B*	Cont & Aux Bldg Vent Bd 1A2-A*
Reactor Vent Bd 2B-B*	Reactor Vent Bd 2A-A*	Reactor Vent Bd 1B-B*	Reactor Vent Bd 1A-A*
Diesel Aux Bd 2B1-B	Diesel Aux Bd 2A1-A	Diesel Aux Bd 1B1-B	Diesel Aux Bd 1A1-A
Diesel Aux Bd 2B2-B	Diesel Aux Bd 2A2-A	Diesel Aux Bd 1B2-B	Diesel Aux Bd 1A2-A
ERCW MCC 2B-B	ERCW MCC 2A-A	ERCW MCC 1B-B	ERCW MCC 1A-A

Abbreviations:

Aux - Auxiliary
Bd - Board
Bldg - Building
Cont - Control
Gen - Generator
MOV - Motor Operated Valve
Shtdn - Shutdown
Vent - Ventilation

*Tripped on loss of off-site power and can be re-connected administratively.

TABLE 8.3.1-5

UNIT 1 POWER TRAIN A BOARD LOADING

Board Name	Board Bus Rating kVA	*Max Load Demand kVA	Mode of Maximum Demand
6.9-kV Shutdown Bd 1A-A	14,300		4
480V Shutdown Bd 1A1-A (3200/1600 a bus)	2660/1330		1, 2
480V Shutdown Bd 1A2-A (3200/1600 a bus)	2660/1330		1, 2
Reactor MOV Bd 1A1-A	498.8		1, 2
Reactor MOV Bd 1A2-A	498.8		1, 2, 3, 4
Cont & Aux Bldg Vent Bd 1A1-A	498.8		3, 4
Cont & Aux Bldg Vent Bd 1A2-A	498.8		1, 2, 3, 4
Reactor Vent Bd 1A-A	498.8		1, 2
Diesel Aux Bd 1A1-A	498.8		3, 4
Diesel Aux Bd 1A2-A	498.8		3, 4
480V ERCW MCC 1A-A	498.8		1, 2, 3, 4

+Code for Mode of Maximum Demand

1 - Normal operation
2 - Full rejection
3 - Safety Injection - A
4 - Safety Injection - B

Note - The demand load is the total of all loads that are energized at the same time under worse case conditions as indicated in the mode of maximum demand column.

* For the calculated maximum load demand, see the Auiliary Power System calculations.

TABLE 8.3.1-6

UNIT 1 POWER TRAIN B BOARD LOADING

Board Name	Board Bus Rating kVA	*Max Load Demand kVA	Mode of Maximum Demand
6.9-kV Shutdown Bd 1B-B	14,300		4
480V Shutdown Bd 1B1-B (3200/1200 a bus)	2660/1330		1, 2
480V Shutdown Bd 1B2-B (3200/1200 a bus)	2660/1330		1, 2
Reactor MOV Bd 1B1-B	498.8		1, 2
Reactor MOV Bd 1B2-B	498.8		1, 2, 3, 4
Cont & Aux Bldg Vent Bd 1B1-B	498.8		3, 4
Cont & Aux Bldg Vent Bd 1B2-B	498.8		1, 2, 3, 4
Reactor Vent Bd 1B-B	498.8		1, 2
Diesel Aux Bd 1B1-B	498.8		3, 4
Diesel Aux Bd 1B2-B	498.8		3, 4
480V ERCW MCC 1B-B	498.8		1, 2, 3, 4

+Code for Mode of Maximum Demand

1 - Normal operation
2 - Full rejection
3 - Safety Injection - A
4 - Safety Injection - B

Note - The demand load is the total of all loads that are energized at the same time under worse case conditions as indicated in the mode of maximum demand column.

* For the calculated maximum load demand, see the Auiliary Power System calculations.

TABLE 8.3.1-7

UNIT 2 POWER TRAIN A BOARD LOADING

Board Name	Board Bus Rating kVA	*Max Load Demand kVA	Mode of Maximum Demand
6.9-kV Shutdown Bd 2A-A	14,300		4
480V Shutdown Bd 2A1-A (3200/1200 a bus)	2660/1330		1, 2
480V Shutdown Bd 2A2-A (3200/1200 a bus)	2660/1330		1, 2
Reactor MOV Bd 2A1-A	498.8		1, 2
Reactor MOV Bd 2A2-A	498.8		3, 4
Cont & Aux Bldg Vent Bd 2A1-A	498.8		3, 4
Cont & Aux Bldg Vent Bd 2A2-A	498.8		1, 2, 3, 4
Reactor Vent Bd 2A-A	498.8		1, 2
Diesel Aux Bd 2A1-A	498.8		3, 4
Diesel Aux Bd 2A2-A	498.8		3, 4
480V ERCW MCC 2A-A	498.8		1, 2, 3, 4

+Code for Mode of Maximum Demand

1 - Normal operation
2 - Full rejection
3 - Safety Injection - A
4 - Safety Injection - B

Note - The demand load is the total of all loads that are energized at the same time under worse case conditions as indicated in the mode of maximum demand column.

* For the calculated maximum load demand, see the Auiliary Power System calculations.

TABLE 8.3.1-8

UNIT 2 POWER TRAIN B BOARD LOADING

Board Name	Board Bus Rating kVA	*Max Load Demand kVA	Mode of Maximum Demand
6.9-kV Shutdown Bd 2B-B	14,300		4
480V Shutdown Bd 2B1-B (3200/1600 a bus)	2660/1330		1, 2
480V Shutdown Bd 2B2-B (3200/1260 a bus)	2660/1330		2
Reactor MOV Bd 2B1-B	498.8		1, 2
Reactor MOV Bd 2B2-B	498.8		3, 4
Cont & Aux Bldg Vent Bd 2B1-B	498.8		3, 4
Cont & Aux Bldg Vent Bd 2B2-B	498.8		1, 2, 3, 4
Reactor Vent Bd 2B-B	498.8		1, 2
Diesel Aux Bd 2B1-B	498.8		3, 4
Diesel Aux Bd 2B2-B	498.8		3, 4
480V ERCW MCC 2B-B	498.8		1, 2, 3, 4

+Code for Mode of Maximum Demand

1 - Normal operation
2 - Full rejection
3 - Safety Injection - A
4 - Safety Injection - B

Note - The demand load is the total of all loads that are energized at the same time under worse case conditions as indicated in the mode of maximum demand column.

* For the calculated maximum load demand, see the Auiliary Power System calculations.

TABLE 8.3.1-9

TRANSFORMER LOADING

All Transformer Ratings Are:
1500/1725 kVA at 55°C or 1680/1932 kVA at 65°C
Except ERCW Transformers Which Are 300 kVA

Power Train A			Power Train B		
			UNIT 1		
Transformer Designation	*Max. Demand kVA	Mode of Max. Demand	Transformer Designation	*Max. Demand kVA	Mode of Max. Demand
1A1-A		1, 2	1B1-B		1, 2
1A2-A		1, 2	1B2-B		1
ERCW 1A-A		3, 4	ERCW 1B-B		1, 2, 3, 4
			UNIT 2		
Transformer Designation	*Max. Demand kVA	Mode of Max. Demand	Transformer Designation	*Max Demand kVA	Mode of Max. Demand
1A1-A		1, 2	2B1-B		1, 2
2A2-A		1, 2	2B2-B		2
ERCW 2A-A		1, 2, 3, 4	ERCW 2B-B		1, 2, 3, 4

Code for Mode of Maximum Demand

1 - Normal operation
2 - Full rejection
3 - Safety Injection - A
4 - Safety Injection - B

Note - The demand load is the total of all loads that are energized at the same time under worse case conditions as indicated in the mode of maximum demand column. Transformer losses are included in maximum demand.

* For the calculated maximum load demand, see the Auiliary Power System calculations.

TABLE 8.3.1-11

Major Non-Safety-Related Electrical Equipment That Could Become Submerged Following a LOCA

Equipment	Evaluation
Motors for the fans of the control rod drive mechanism coolers	These coolers are used to maintain the ambient temperature in the area of the control rod drives within an acceptable range during normal operation. Their function is not required for LOCA mitigation. (Ref Section 9.4.8*).
Reactor coolant drain tank pumps	These pumps remove from inside containment the normal leakage of the reactor coolant system that has been colected in the reactor coolant drain tank. This is not a safety function. The discharge path of the pumps is automatically isolated in a LOCA. (Ref Section 9.3.3.3*).
Floor and equipment drain sump pumps	These pumps remove from inside containment any leakage inside containment that is not collected in the reactor coolant drain tank. This is not a safety function. The discharge path of the pumps is automatically isolated in a LOCA. (Ref Section 9.3.3.38*).
Pressurizer heaters	Automatically deenergized in the event of a LOCA.

*If energized when flooded, the motors will short to ground and cause opening of the power supply breakers.

TABLE 8.3.2-1

Loss of Major Safety Loads Due To
Vital 125V DC Battery Loss Concurrent with Loss of Offsite Power

Battery	DC Control Power Failure Effect	Multiple Failures	Channels
I	"A" Train Class 1E Power System (Unit 1)	SSPS(A) & (B) Ch I Input Relays	1-I, 2-I
		NIS Ch 1 Volt Reg Inst Power	1-I, 2-I
		NIS Control Pwr Ch I	1-I, 2-I
		Process Protection Set I	1-I, 2-I
II	"B" Train Class 1E Power System (Unit 1)	SSPS(A) & (B) Ch II Input Relays	1-II, 2-II
		NIS Ch II Volt Reg Inst Power	1-II, 2-II
		NIS Control Pwr Ch II	1-I, 2-II
		Process Protection Set II	1-II, 2-II
III	"A" Train Class 1E Power System (Unit 2)	SSPS (A) & (B) Ch III Input Relays	1-III, 2-III
		NIS CH III Volt Reg Inst Power	1-III, 2-III
		NIS Cont Pwr Ch III	1-III, 2-III
		Process Protection Set III	1-III, 2-III
IV	"B" Train Class 1E Power System (Unit 2)	SSPS (A) & (B) Ch IV Input Relays	1-IV, 2-IV
		NIS CH IV Volt Reg Inst Power	1-IV, 2-IV
		NIS Cont Pwr Ch IV	1-IV, 2-IV
		Process Protection Set IV	1-IV, 2-IV

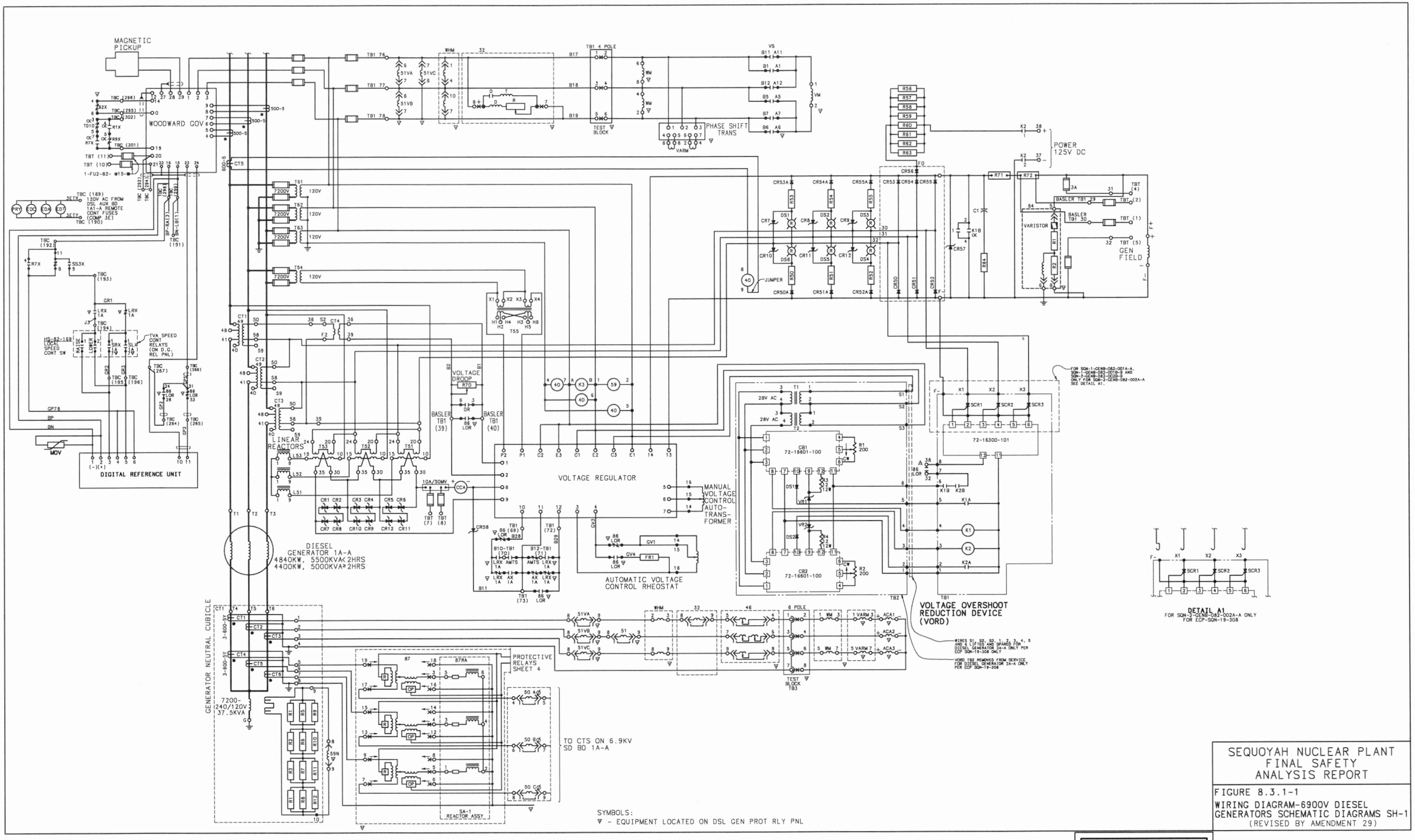

SEQUOYAH NUCLEAR PLANT
FINAL SAFETY
ANALYSIS REPORT

FIGURE 8.3.1-1

WIRING DIAGRAM-6900V DIESEL GENERATORS SCHEMATIC DIAGRAMS SH-1
(REVISED BY AMENDMENT 29)

CAD MAINTAINED DRAWING

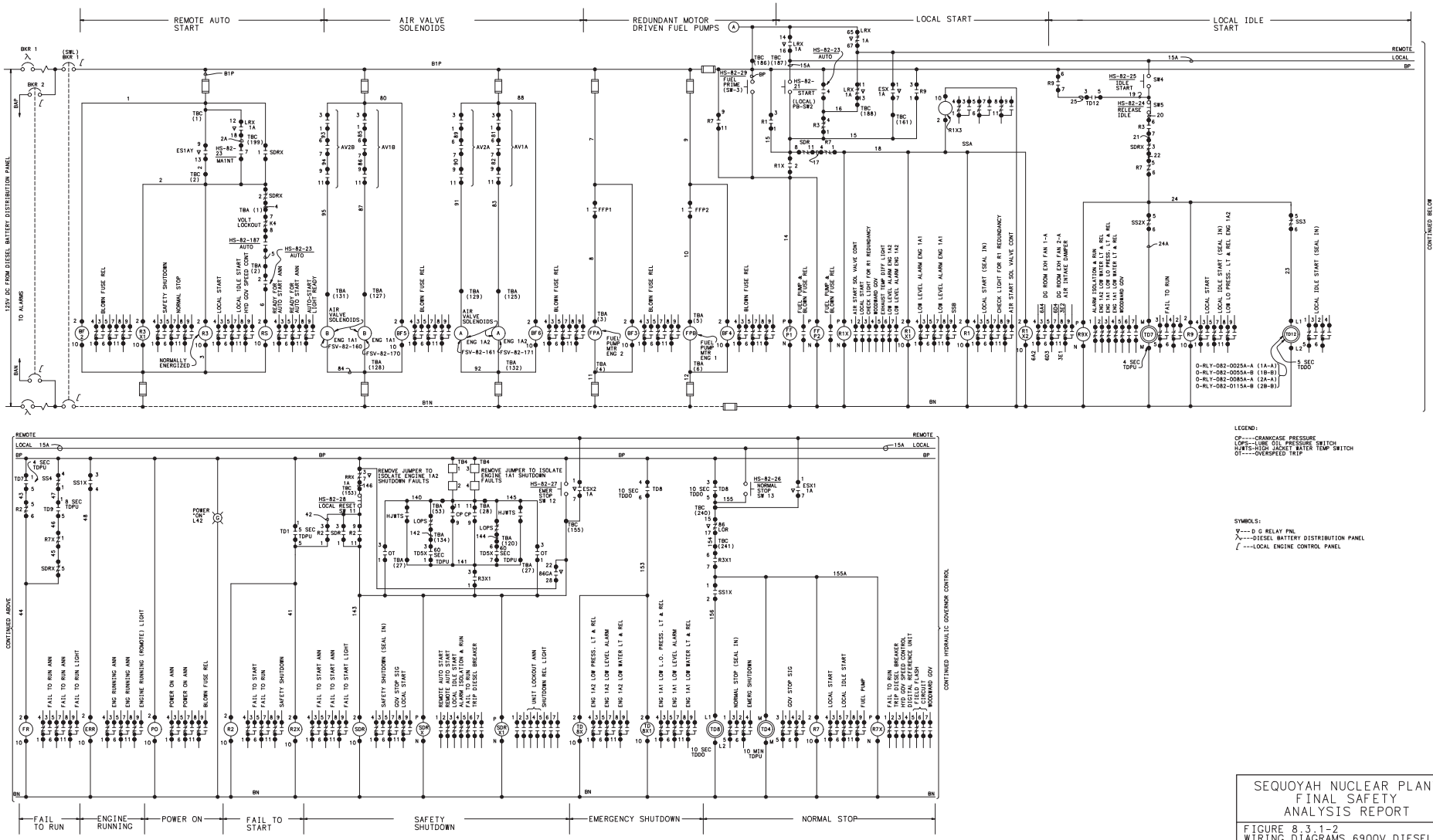

LEGEND:

CP---CRANKCASE PRESSURE
LOPS--LUBE OIL PRESSURE SWITCH
HJWTS-HIGH JACKET WATER TEMP SWITCH
OT---OVERSPEED TRIP

SYMBOLS:

---D G RELAY PNL
---DIESEL BATTERY DISTRIBUTION PANEL
---LOCAL ENGINE CONTROL PANEL

SEQUOYAH NUCLEAR PLANT
FINAL SAFETY
ANALYSIS REPORT

FIGURE 8.3.1-2
WIRING DIAGRAMS 6900V DIESEL
GENERATORS SCHEMATIC
DIAGRAM SH 2
(REVISED BY AMENDMENT 28)

CAD MAINTAINED DRAWING

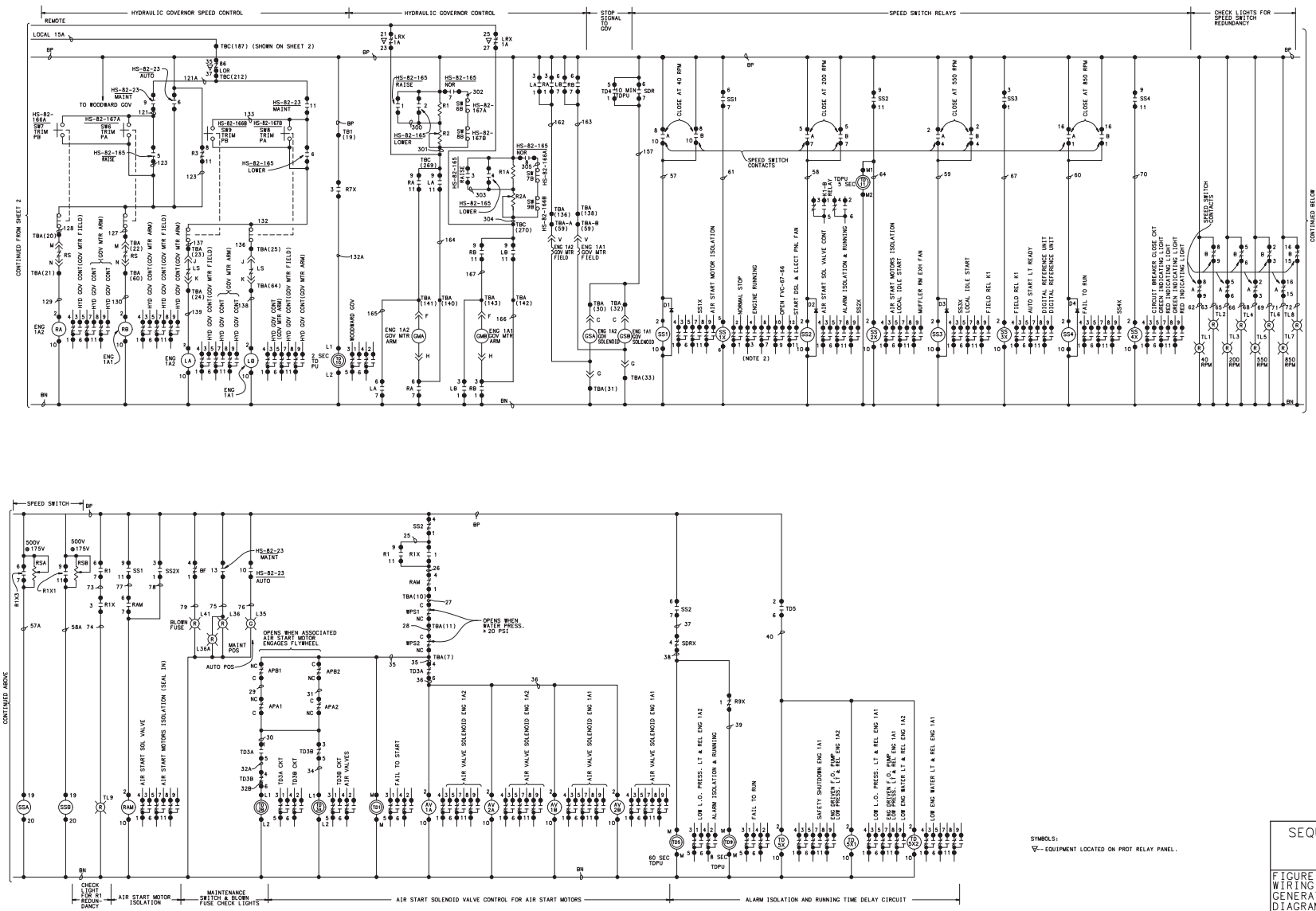

SEQUOYAH NUCLEAR PLANT
FINAL SAFETY
ANALYSIS REPORT

FIGURE 8.3.1-3
WIRING DIAGRAM 6900V DIESEL
GENERATORS SCHEMATIC
DIAGRAM SH 3
(REVISED BY AMENDMENT 28)

CAD MAINTAINED DRAWING

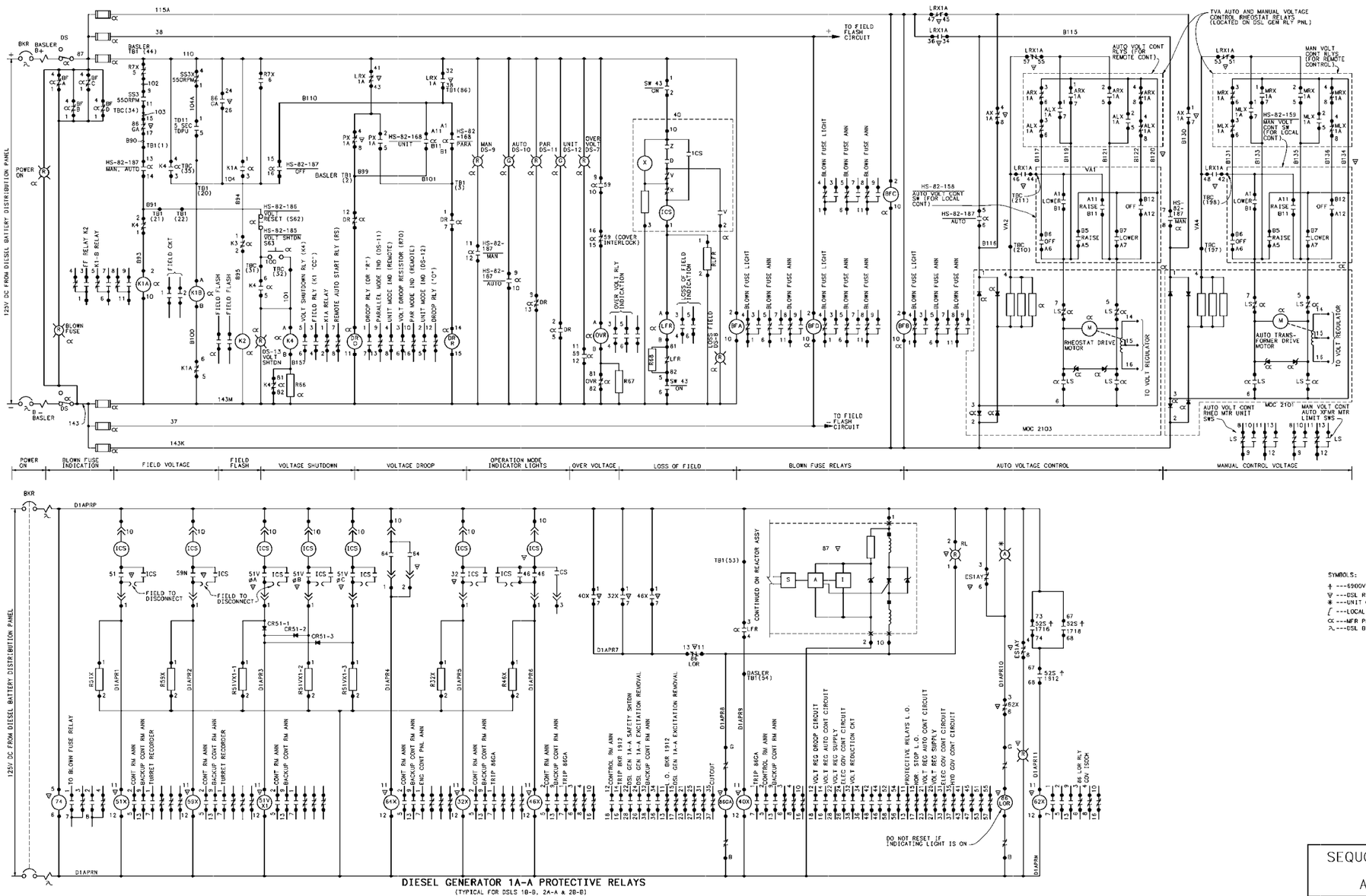

DIESEL GENERATOR 1A-A PROTECTIVE RELAYS
(TYPICAL FOR DSLS 1B-B, 2A-A & 2B-B)

SYMBOLS:
- ---6900V SHTDN BD
- ---DSL RELAY PANEL
- ---UNIT CONTROL ROOM
- ---LOCAL CONTROL STATION
- ---MFR PNL (EXCITER PNL)
- ---DSL BTRY DISTR PNL

SEQUOYAH NUCLEAR PLANT
FINAL SAFETY
ANALYSIS REPORT

FIGURE 8.3.1-4
WIRING DIAGRAMS 6900V DIESEL GENERATORS SCHEMATIC DIAGRAMS SH 4
(REVISED BY AMENDMENT 13)

DRAWING SERVICES UNIT
PROCAD MAINTAINED DRAWING
THIS CONFIGURATION CONTROL DRAWING IS MAINTAINED BY THE SQN CAD UNIT AND IS PART OF THE TVA PROCADAM DATABASE.
COMPUTER GRAPHICS

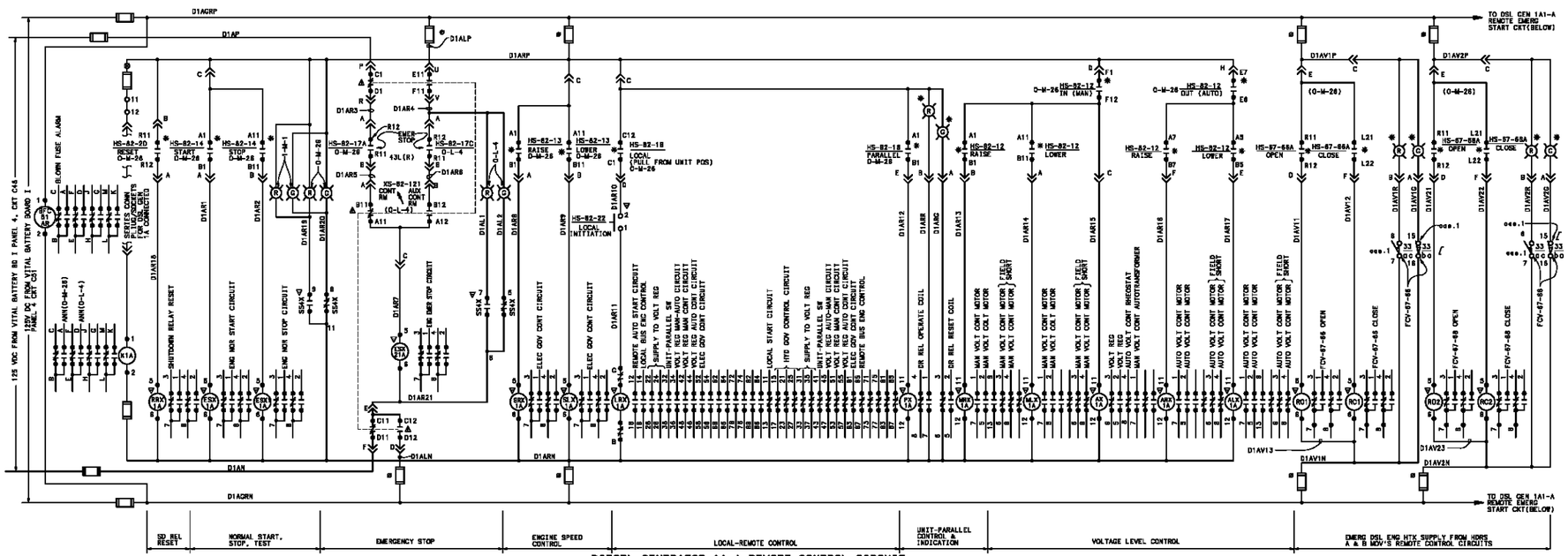

DIESEL GENERATOR 1A-A REMOTE CONTROL CIRCUIT
(TYPICAL FOR DSLS 1B-B, 2A-A & 2B-B
SEE TABLE BELOW FOR DSL GEN SWITCH DESIGNATIONS

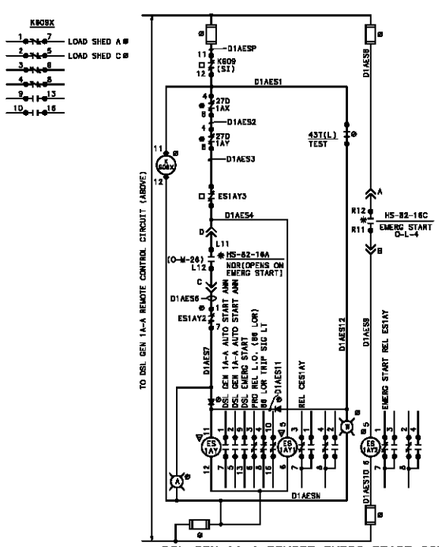

DSL GEN 1A-A REMOTE EMERG START CIRCUIT

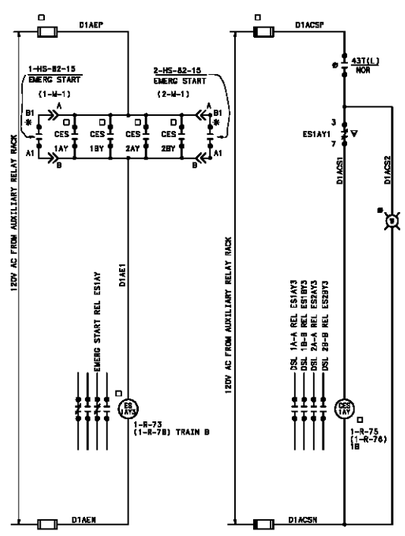

DSL GEN 1A-A COMMON START RELAY CIRCUIT (SEE NOTE 1)

(TYPICAL FOR DSLS 1B-B, 2A-A & 2B-B)
SEE TABLE AT RIGHT FOR DSL GEN SWITCH DESIGNATIONS

DSL GEN	SWITCH DESIGNATION									125V VITAL POWER				RELAY TAG	
	VOLT CONT	SPEED CONT	CONT	EMERG START	EMERG START	EMERG STOP	EMERG STOP XFER	MODE SELECT	START RESET	BD	PNL	CKT	CKT	BLOWN FUSE RELAY	IDLE START RELAY
1A-A	HS-82-12	HS-82-13	HS-82-14	HS-82-18	HS-82-18A & C	HS-82-17A & C	XS-82-121	HS-82-18	HS-82-20	I	4	C51	D48	BFC51AR1A	D-RLY-082-0025A-A
1B-B	HS-82-42	HS-82-43	HS-82-44		HS-82-48A & C	HS-82-47A & C	XS-82-122	HS-82-48	HS-82-30	II	4	C51	C18	BFC51AR1B	D-RLY-082-0055A-B
2A-A	HS-82-72	HS-82-73	HS-82-74		HS-82-78A & C	HS-82-77A & C	XS-82-123	HS-82-78	HS-82-80	III	4	C51	D42	BFC51AR2A	D-RLY-082-0085A-A
2B-B	HS-82-102	HS-82-103	HS-82-104		HS-82-108A & C	HS-82-107A & C	XS-82-124	HS-82-108	HS-82-110	IV	4	C51	C3	BFC51AR2B	D-RLY-082-0118A-B

DSL GEN	SWITCH DESIGNATION (LOCAL CONTROL)																		
	LOCAL START	LOCAL TRIP	AUTO-MAINT.SW	IDLE RELEASE	IDLE START	STOP	EMERG.STOP	SD RESET	FUEL PRIME	AUTO VOL CONT	MAN VOLT CONT	GOV. CONT	TRIM ENG 1A1	TRIM ENG 1A2	UNIT/PARALLEL	E-LC.GOV	VOL SD	VOLT RESET	VOLT REG
1A-A	HS-82-21	HS-82-22	HS-82-23	HS-82-24	HS-82-25	HS-82-26	HS-82-27	HS-82-28	HS-82-29	HS-82-158	HS-82-159	HS-82-165	HS-82-168A,B	HS-82-167A,B	HS-82-168	HS-82-169	HS-82-185	HS-82-186	HS-82-187
1B-B	HS-82-51	HS-82-52	HS-82-53	HS-82-54	HS-82-55	HS-82-56	HS-82-57	HS-82-58	HS-82-59	HS-82-188	HS-82-189	HS-82-195	HS-82-196A,B	HS-82-197A,B	HS-82-198	HS-82-199	HS-82-215	HS-82-216	HS-82-217
2A-A	HS-82-81	HS-82-82	HS-82-83	HS-82-84	HS-82-85	HS-82-86	HS-82-87	HS-82-88	HS-82-89	HS-82-218	HS-82-219	HS-82-225	HS-82-226A,B	HS-82-227A,B	HS-82-228	HS-82-229	HS-82-245	HS-82-246	HS-82-247
2B-B	HS-82-111	HS-82-112	HS-82-113	HS-82-114	HS-82-115	HS-82-116	HS-82-117	HS-82-118	HS-82-119	HS-82-248	HS-82-249	HS-82-255	HS-82-256A,B	HS-82-257A,B	HS-82-258	HS-82-259	HS-82-275	HS-82-276	HS-82-277

NOTES:

1. DIESEL GENERATORS 1A-A & 2A-A ASSOCIATED EQUIPMENT IS TRAIN A; DIESEL GENERATORS 1B-B & 2B-B ASSOCIATED EQUIPMENT IS TRAIN B. ALL EQUIPMENT IS SAFETY RELATED EXCEPT DIESEL GENERATORS COMMON START RELAY CIRCUIT.

LOCATION SYMBOLS:

- ø-----6.9KV SD BD LOGIC PNL
- ✱-----UNIT CONTROL ROOM
- ⊗-----X PANEL
- ▲-----AUX CONTROL ROOM
- □-----RELAY RACK AUX INST. RM.
- /-----LOCAL CONTROL STATION
- ▼-----DSL GEN RELAY PANEL

SEQUOYAH NUCLEAR PLANT
FINAL SAFETY
ANALYSIS REPORT

FIGURE 8.3.1-5
WIRING DIAGRAMS 6900V DIESEL
GENERATORS SCHEMATIC
DIAGRAM SH 5
(REVISED BY AMENDMENT 24)

CAD MAINTAINED DRAWING

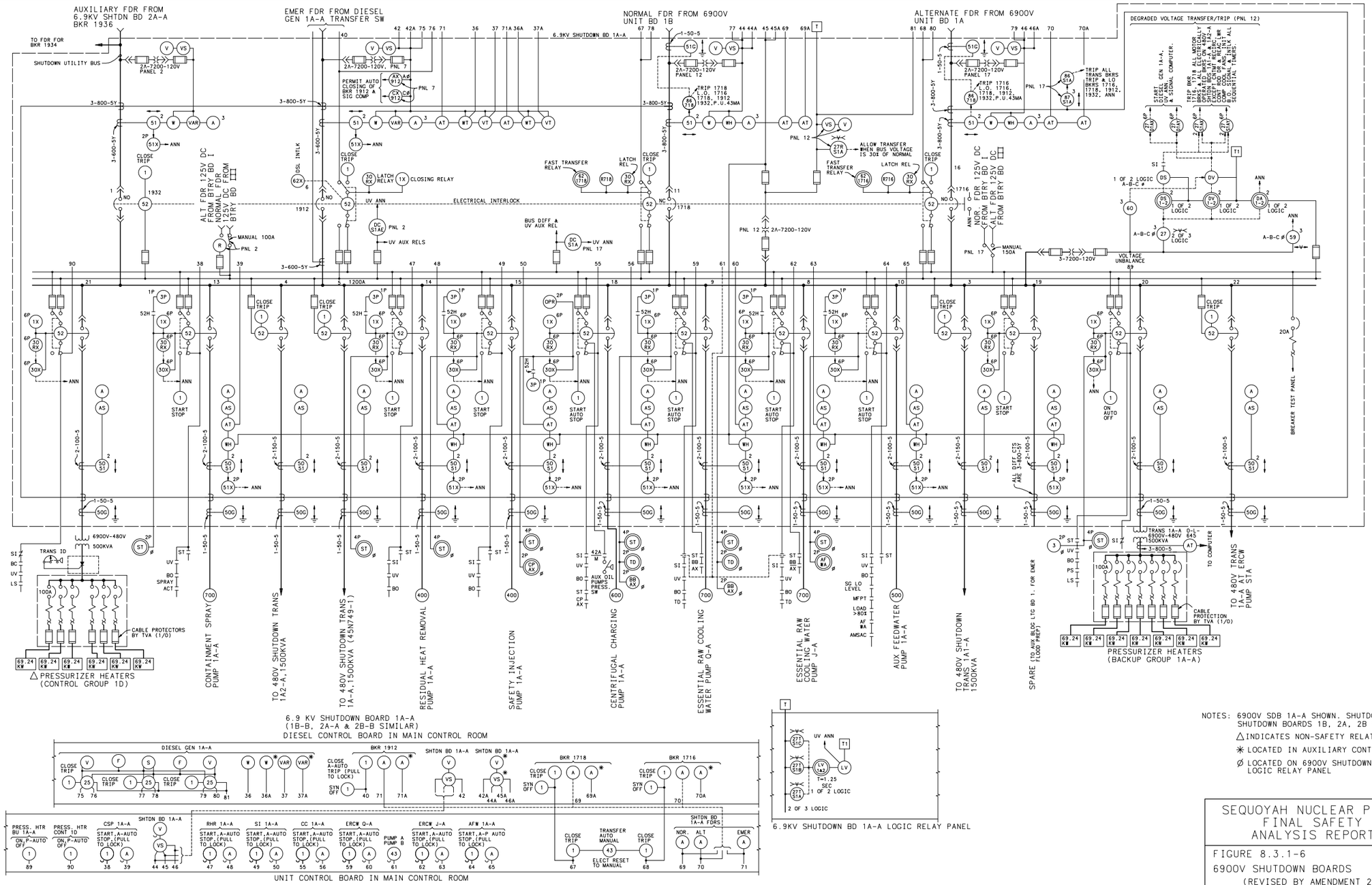

NOTES: 6900V SDB 1A-A SHOWN. SHUTDOWN SHUTDOWN BOARDS 1B, 2A, 2B SIMILAR.

△ INDICATES NON-SAFETY RELATED LOAD

✳ LOCATED IN AUXILIARY CONTROL ROOM

Ø LOCATED ON 6900V SHUTDOWN BOARD LOGIC RELAY PANEL

SEQUOYAH NUCLEAR PLANT
FINAL SAFETY
ANALYSIS REPORT

FIGURE 8.3.1-6
6900V SHUTDOWN BOARDS
(REVISED BY AMENDMENT 29)

CAD MAINTAINED DRAWING

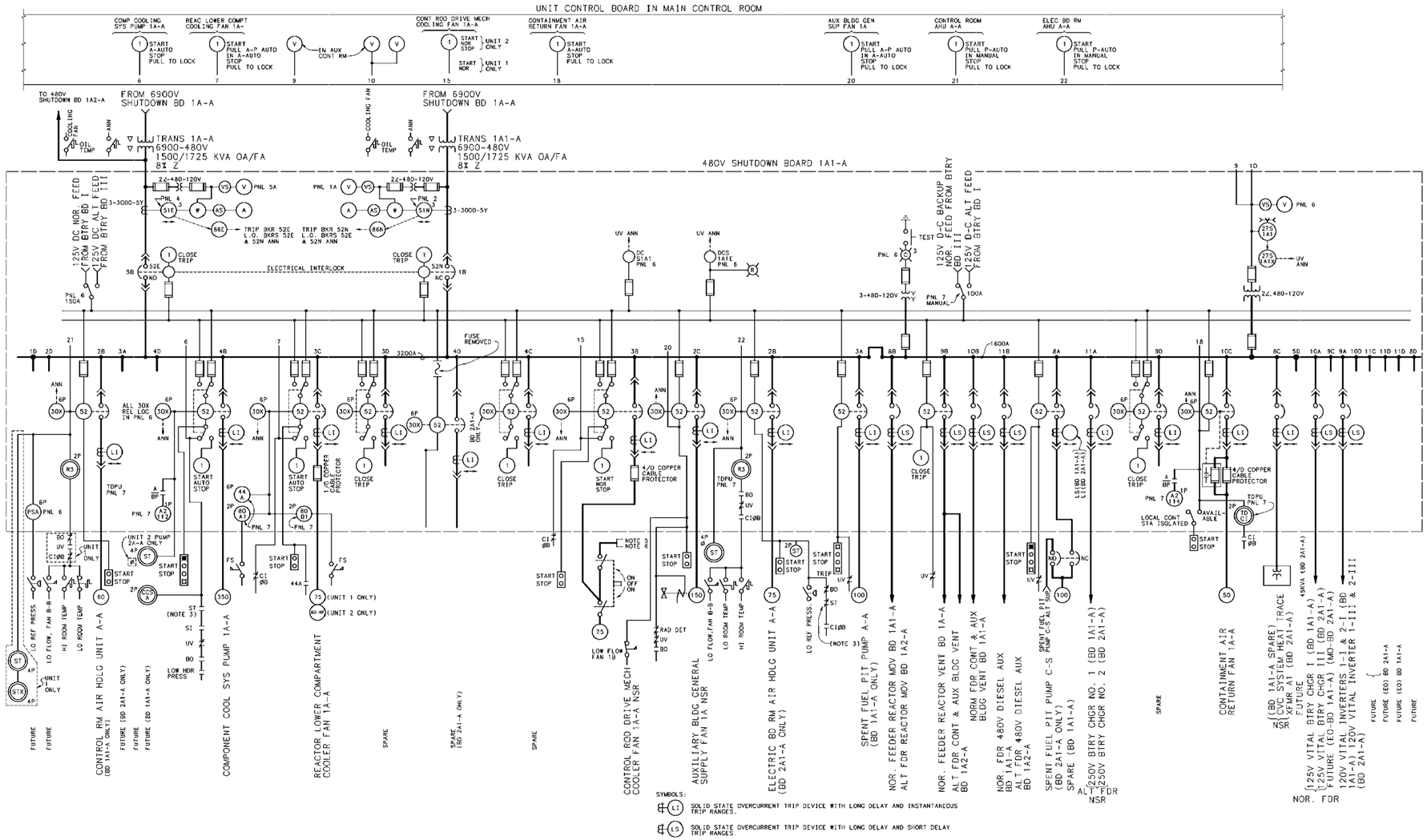

480V SD BOARD 1A1-A, 2A1-A AS NOTED
(1B1-B & 2B1-B SIMILAR)

NOTES

1. 480V SDB 1A1-A SHOWN AND 2A1-A AS NOTED. 1B1-B AND 2B1-B ARE SIMILAR.
2. NSR INDICATES NON-SAFETY RELATED EQUIPMENT.
3. SEQUENTIAL TIMER APPLIES LOAD TO DIESEL GENERATOR.
4. THE NORMAL & ALTERNATE DC CONTROL SUPPLIES AS SHOWN ON THIS DRAWING FOR THE NORMAL & BACKUP BUSSES ARE THE EXACT REVERSE FOR BOARD 2A1-A.
5. RECEPTACLE FOR 480V POWER DURING OUTAGES.
6. ALL CIRCUITS BEING SUPPLIED BY THIS RECEPTACLE SHALL HAVE THEIR OWN PROPERLY SIZED ELECTRICAL CIRCUIT PROTECTION.

SEQUOYAH NUCLEAR PLANT
FINAL SAFETY
ANALYSIS REPORT

FIGURE 8.3.1-7
WIRING DIAGRAMS-480V SHUTDOWN BOARD 1A1-A SINGLE LINE
(REVISED BY AMENDMENT 17)

CAD MAINTAINED DRAWING

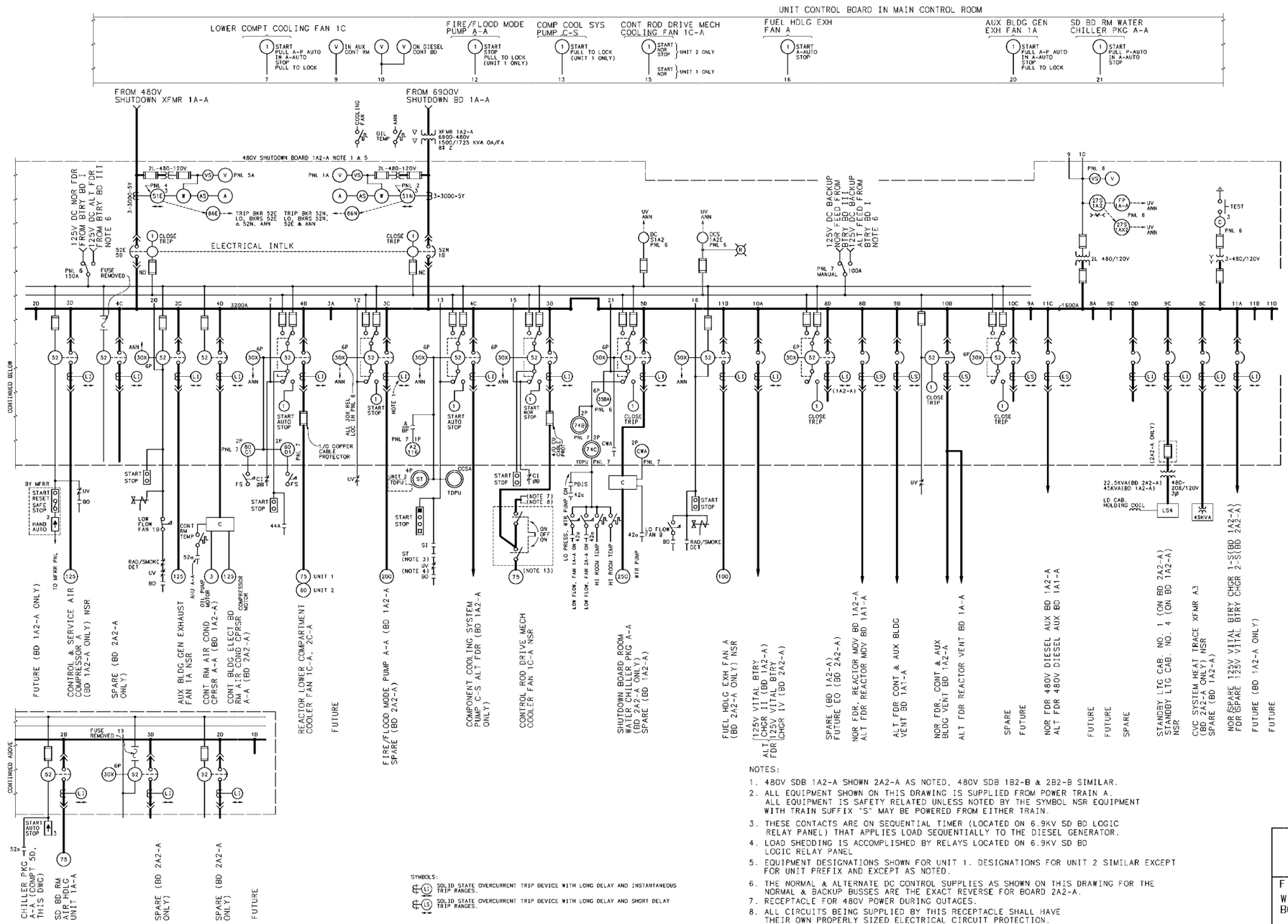

NOTES:

1. 480V SDB 1A2-A SHOWN 2A2-A AS NOTED. 480V SDB 1B2-B & 2B2-B SIMILAR.
2. ALL EQUIPMENT SHOWN ON THIS DRAWING IS SUPPLIED FROM POWER TRAIN A. ALL EQUIPMENT IS SAFETY RELATED UNLESS NOTED BY THE SYMBOL NSR EQUIPMENT WITH TRAIN SUFFIX "S" MAY BE POWERED FROM EITHER TRAIN.
3. THESE CONTACTS ARE ON SEQUENTIAL TIMER (LOCATED ON 6.9KV SD BD LOGIC RELAY PANEL) THAT APPLIES LOAD SEQUENTIALLY TO THE DIESEL GENERATOR.
4. LOAD SHEDDING IS ACCOMPLISHED BY RELAYS LOCATED ON 6.9KV SD BD LOGIC RELAY PANEL.
5. EQUIPMENT DESIGNATIONS SHOWN FOR UNIT 1. DESIGNATIONS FOR UNIT 2 SIMILAR EXCEPT FOR UNIT PREFIX AND EXCEPT AS NOTED.
6. THE NORMAL & ALTERNATE DC CONTROL SUPPLIES AS SHOWN ON THIS DRAWING FOR THE NORMAL & BACKUP BUSSES ARE THE EXACT REVERSE FOR BOARD 2A2-A.
7. RECEPTACLE FOR 480V POWER DURING OUTAGES.
8. ALL CIRCUITS BEING SUPPLIED BY THIS RECEPTACLE SHALL HAVE THEIR OWN PROPERLY SIZED ELECTRICAL CIRCUIT PROTECTION.

SEQUOYAH NUCLEAR PLANT
FINAL SAFETY
ANALYSIS REPORT

FIGURE 8.3.1-8

WIRING DIAGRAMS 480V SHUTDOWN BOARD 1A2-A SINGLE LINE

(REVISED BY AMENDMENT 19)

CAD MAINTAINED DRAWING

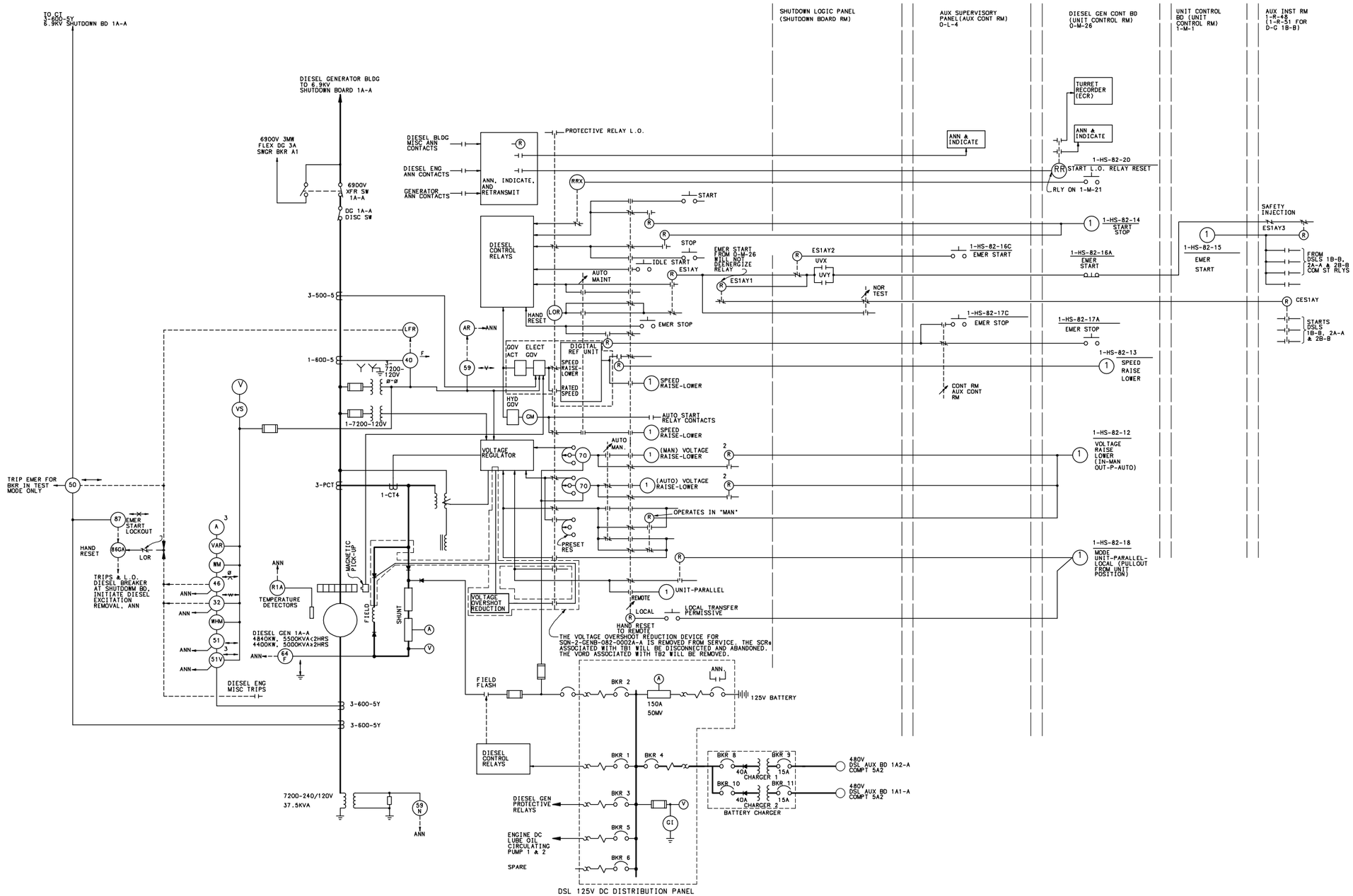

DIESEL GENERATOR 1A-A SHOWN.
D.G. 1B-B,
2A-A, AND 2B-B SIMILAR.

SEQUOYAH NUCLEAR PLANT
FINAL SAFETY
ANALYSIS REPORT

FIGURE 8.3.1-9

WIRING DIAGRAM-6900V DIESEL
GENERATORS SINGLE LINE
(REVISED BY AMENDMENT 30)

CAD MAINTAINED DRAWING

(30-33,36,37,38)

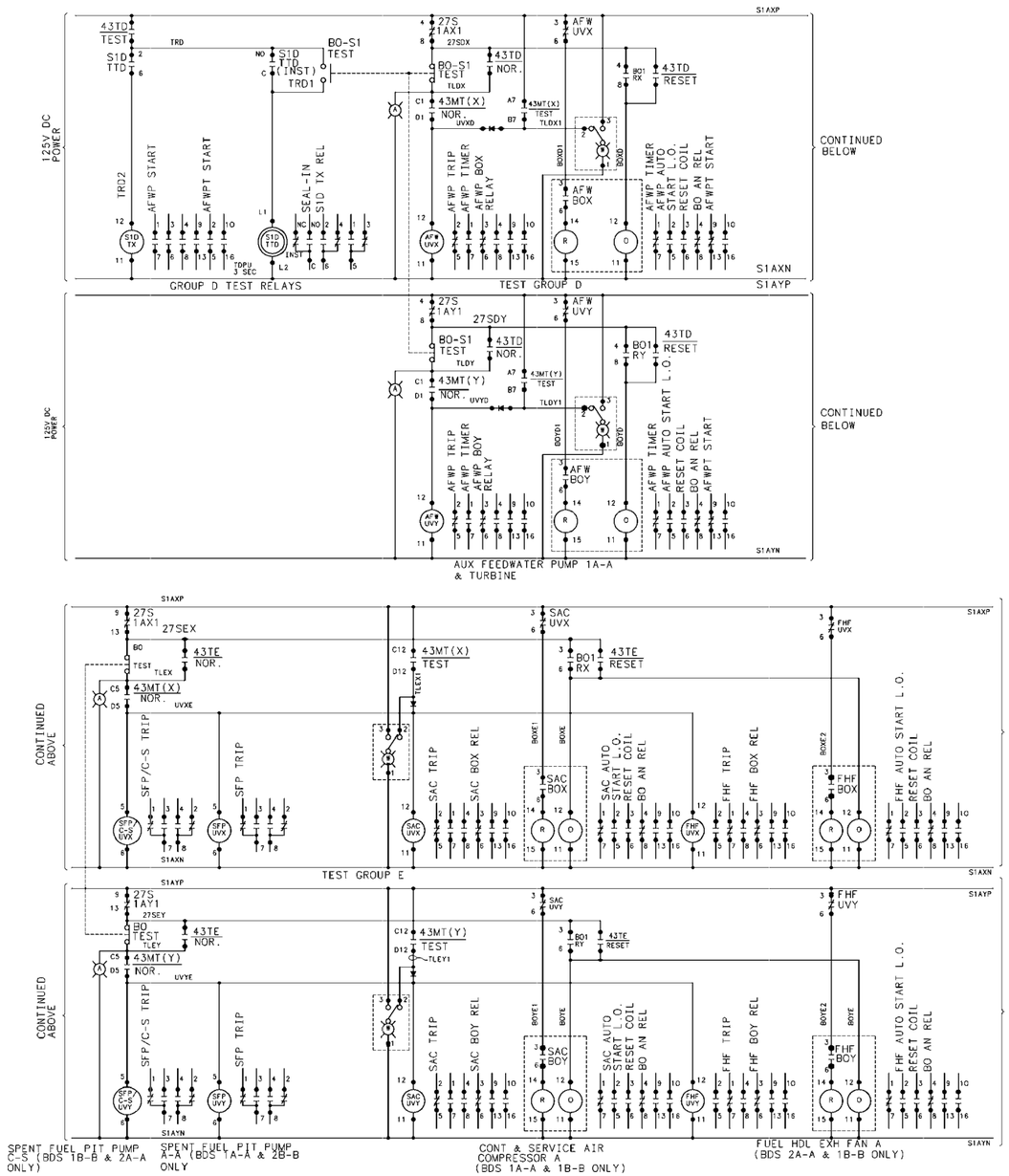

SEQUOYAH NUCLEAR PLANT
FINAL SAFETY
ANALYSIS REPORT

FIGURE 8.3.1-10
WIRING DIAGRAM 6900V SHUTDOWN
BD-TYPICAL BLACKOUT LOGIC

(REVISED BY AMENDMENT 17)

CAD MAINTAINED DRAWING

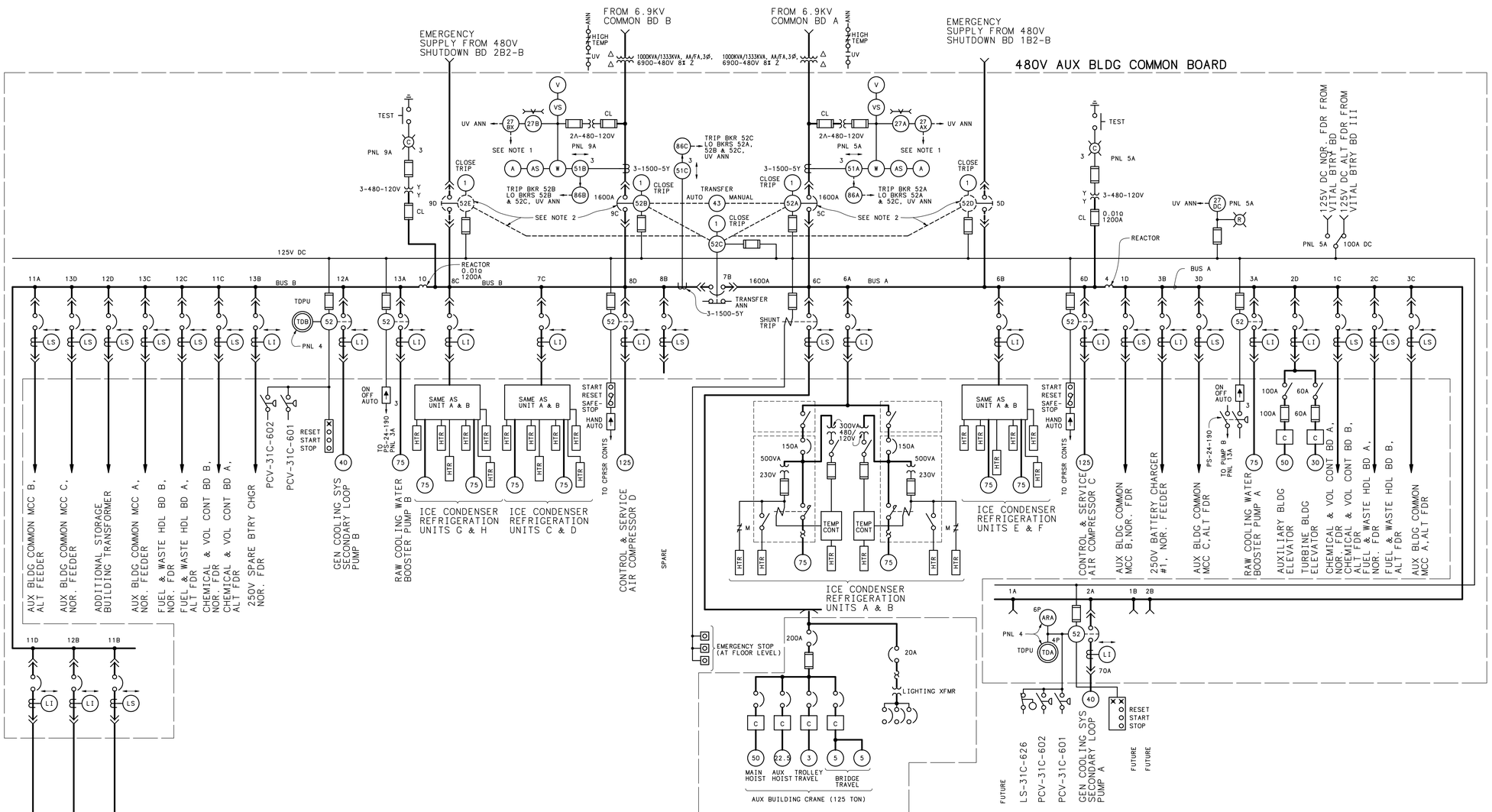

NOTES:

1. THE INCOMING LINE SUPPLY BREAKERS, A & B, & BUS TIE BREAKER C ARE INTERLOCKED IN SUCH A MANNER THAT THE COMMON BOARD TRANSFORMERS CANNOT BE PARALLELED. NORMALLY EACH BUS IS FED FROM ITS OWN TRANSFORMER WITH THE BUS TIE BREAKER OPEN. THE AUTO-MANUAL TRANSFER SELECTOR SWITCH IS TO BE PLACED IN THE "MANUAL" POSITION.
2. TO USE THE TWO EMERGENCY SUPPLIES THE BREAKERS 52A AND 52B MUST BE MOVED TO THE EMERGENCY SUPPLY COMPARTMENTS. THE EMERGENCY SUPPLIES CANNOT BE PARALLELED WITH EACH OTHER OR A NORMAL POWER SUPPLY, THROUGH THE BUS TIE BREAKER.
3. NO EQUIPMENT ON THIS BOARD IS SAFETY RELATED.

SYMBOLS:

LI — SOLID STATE OVERCURRENT TRIP DEVICE WITH LONG DELAY AND INSTANTANEOUS TRIP RANGE.

LS — SOLID STATE OVERCURRENT TRIP DEVICE WITH LONG DELAY AND SHORT DELAY TRIP RANGES.

SEQUOYAH NUCLEAR PLANT
FINAL SAFETY
ANALYSIS REPORT

FIGURE 8.3.1-11

WIRING DIAGRAMS 480V AUX BLDG COMMON BOARD SINGLE LINE

(REVISED BY AMENDMENT 30)

CAD MAINTAINED DRAWING

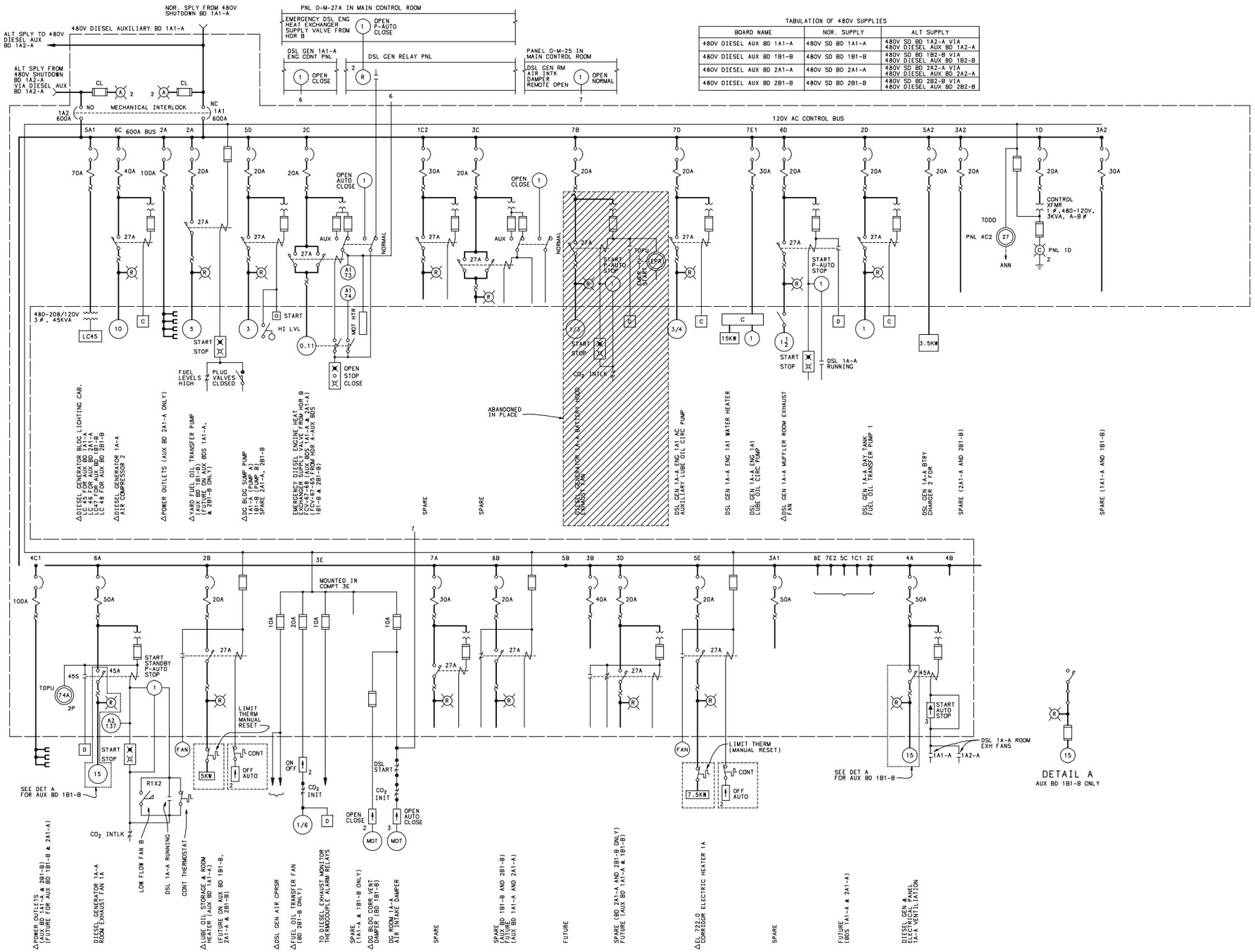

TABULATION OF 480V SUPPLIES

BOARD NAME	NOR. SUPPLY	ALT SUPPLY
480V DIESEL AUX BD 1A1-A	480V SD BD 1A1-A	480V SD BD 1A2-A VIA 480V DIESEL AUX BD 1A2-A
480V DIESEL AUX BD 1B1-B	480V SD BD 1B1-B	480V SD BD 1B2-B VIA 480V DIESEL AUX BD 1B2-B
480V DIESEL AUX BD 2A1-A	480V SD BD 2A1-A	480V SD BD 2A2-A VIA 480V DIESEL AUX BD 2A2-A
480V DIESEL AUX BD 2B1-B	480V SD BD 2B1-B	480V SD BD 2B2-B VIA 480V DIESEL AUX BD 2B2-B

NOTES:

1. EQUIPMENT DESIGNATIONS SHOWN FOR 1A1-A. DESIGNATIONS FOR 1B1-B, 2A1-A & 2B1-B SIMILAR EXCEPT AS NOTED.
2. ALL EQUIPMENT ASSIGNED TO BOARDS 1A1-A & 2A1-A IS SUPPLIED FROM POWER TRAIN A. ALL EQUIPMENT ASSIGNED TO BOARDS 1B1-B & 2B1-B IS SUPPLIED FROM POWER TRAIN B. ALL EQUIPMENT IS SAFETY RELATED UNLESS NOTED BY THE SYMBOL Δ.

SYMBOLS:

- THERMAL MAGNETIC OVERCURRENT TRIP
- D MOTOR OPERATED DAMPER
- OVERLOAD HTR ELEMENT REMOVED(JUMPER INSTALLED)
- Δ NON SAFETY RELATED LOAD

SEQUOYAH NUCLEAR PLANT
FINAL SAFETY
ANALYSIS REPORT

FIGURE 8.3.1-12

WIRING DIAGRAMS 480V DIESEL AUX BD 1A1-A SINGLE LINE
(REVISED BY AMENDMENT 30)

CAD MAINTAINED DRAWING

TABULATION OF 480V SUPPLIES

BOARD NAME	NOR SUPPLY	ALT SUPPLY
480V DIESEL AUX BD 1A2-A	480V SD BD 1A2-A	480V SD BD 1A1-A VIA 480V DIESEL AUX BD 1A1-A
480V DIESEL AUX BD 1B2-B	480V SD BD 1B2-B	480V SD BD 1B1-B VIA 480V DIESEL AUX BD 1B1-B
480V DIESEL AUX BD 2A2-A	480V SD BD 2A2-A	480V SD BD 2A1-A VIA 480V DIESEL AUX BD 2A1-A
480V DIESEL AUX BD 2B2-B	480V SD BD 2B2-B	480V SD BD 2B1-B VIA 480V DIESEL AUX BD 2B1-B

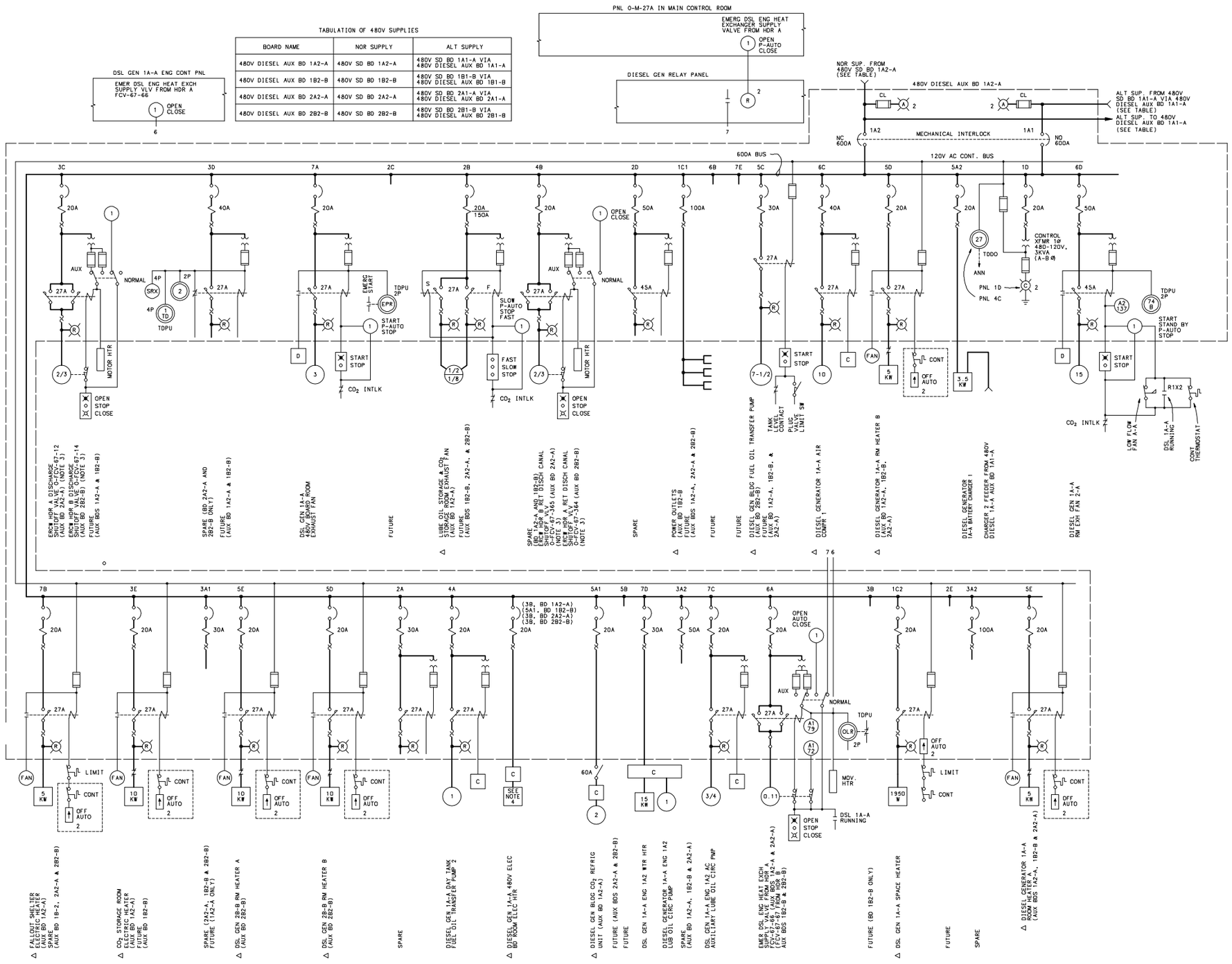

NOTES:

1. EQUIPMENT DESIGNATIONS SHOWN FOR 1A2-A. DESIGNATIONS FOR 1B2-B, 2A2-A & 2B2-B SIMILAR EXCEPT AS NOTED.
2. ALL EQUIPMENT ASSIGNED TO BOARDS 1A2-A & 2A2-A IS SUPPLIED FROM POWER TRAIN A. ALL EQUIPMENT ASSIGNED TO BOARDS 1B2-B & 2B2-B IS SUPPLIED FROM POWER TRAIN B. ALL EQUIPMENT IS SAFETY RELATED UNLESS NOTED BY THE SYMBOL △.
3. POWER HAS BEEN REMOVED FROM O-FCV-67-12, -14, -364 & 365 BY OPENING THEIR RESPECTIVE ACB'S.
4. THESE HEATERS CAN BE EITHER 5 OR 6 KW.

SYMBOLS:

- THERMAL MAGNETIC OVERCURRENT TRIP
- D MOTOR OPERATED DAMPER
- OVERLOAD HTR ELEMENT REMOVED(JUMPER INSTALLED)
- △ NON SAFETY RELATED EQUIPMENT

SEQUOYAH NUCLEAR PLANT
FINAL SAFETY
ANALYSIS REPORT

FIGURE 8.3.1-13
WIRING DIAGRAMS 480V DIESEL AUX BD 1A2-A SINGLE LINE
(REVISED BY AMENDMENT 30)

CAD MAINTAINED DRAWING

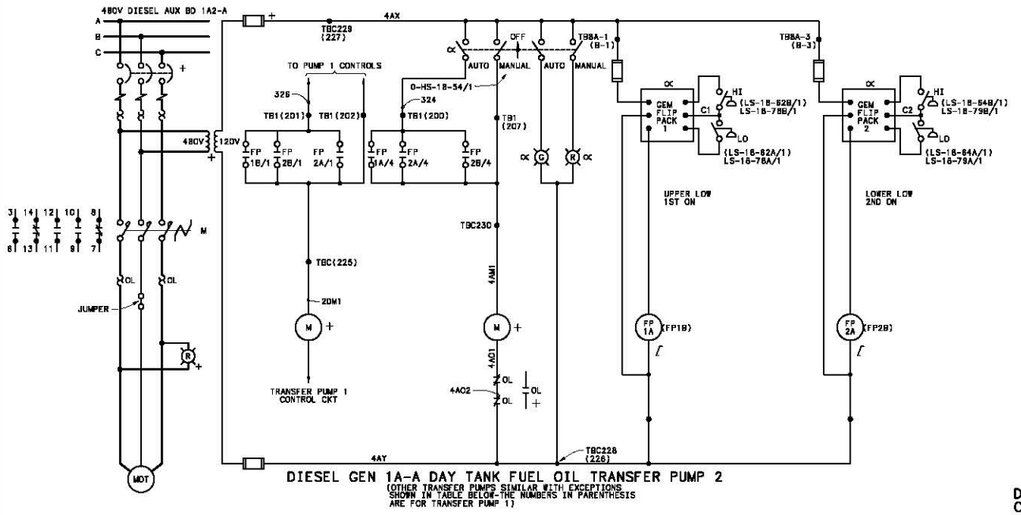

DIESEL GEN 1A-A DAY TANK FUEL OIL TRANSFER PUMP 2

(OTHER TRANSFER PUMPS SIMILAR WITH EXCEPTIONS SHOWN IN TABLE BELOW-THE NUMBERS IN PARENTHESIS ARE FOR TRANSFER PUMP 1)

DIESEL GENERATOR	TRANSFER PUMP	DIESEL BOARD	SWITCHES	LEVEL SWITCHES	TRAIN
1A-A	1	1A1-A	0-HS-18-55/1	LS-18-62A/1,B/1;LS-18-64A/1,B/1	A
	2	1A2-A	0-HS-18-54/1	LS-18-79A/1,B/1;LS-18-78A/1,B/1	A
1B-B	1	1B1-B	0-HS-18-55/2	LS-18-62A/2,B/2;LS-18-64A/2,B/2	B
	2	1B2-B	0-HS-18-54/2	LS-18-79A/2,B/2;LS-18-78A/2,B/2	B
2A-A	1	2A1-A	0-HS-18-55/3	LS-18-62A/3,B/3;LS-18-64A/3,B/3	A
	2	2A2-A	0-HS-18-54/3	LS-18-79A/3,B/3;LS-18-78A/3,B/3	A
2B-B	1	2B1-B	0-HS-18-55/4	LS-18-62A/4,B/4;LS-18-64A/4,B/4	B
	2	2B2-B	0-HS-18-54/4	LS-18-79A/4,B/4;LS-18-78A/4,B/4	B

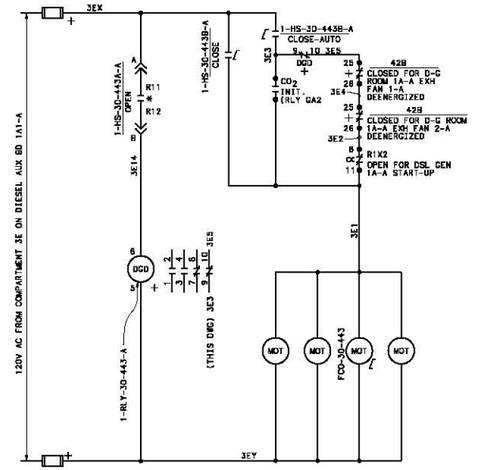

DIESEL GEN BLDG CORRIDOR VENT DAMPER

(BD 1B1-B ONLY)

DIESEL GEN ROOM 1A-A AIR INTAKE DAMPER

(TYPICAL FOR DAMPERS LISTED BELOW)

PANEL	SWITCH NO.	ROOM	DIESEL BOARD	SWITCH NUMBER	VALVE NUMBER	RELAY ID NO.
0-M-25	1-HS-3D-443A-A	1A-A	1A1-A	1-HS-3D-443B-A	FCO-3D-443	1-RLY-3D-443-A
0-M-25	1-HS-3D-445A-B	1B-B	1B1-B	1-HS-3D-445B-B	FCO-3D-445	1-RLY-3D-445-B
0-M-25	2-HS-3D-444A-A	2A-A	2A1-A	2-HS-3D-444B-A	FCO-3D-444	2-RLY-3D-444-A
0-M-25	2-HS-3D-446A-B	2B-B	2B1-B	2-HS-3D-446B-B	FCO-3D-446	2-RLY-3D-446-B
		1B-B	1B1-B	HS-3D-467	FCO-3D-467	

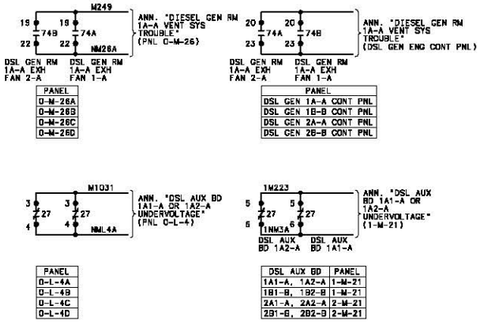

SEQUOYAH NUCLEAR PLANT
FINAL SAFETY
ANALYSIS REPORT

FIGURE 8.3.1-14

WIRING DIAGRAMS-480V DIESEL AUX POWER SH 4

(REVISED BY AMENDMENT 26)

CAD MAINTAINED DRAWING

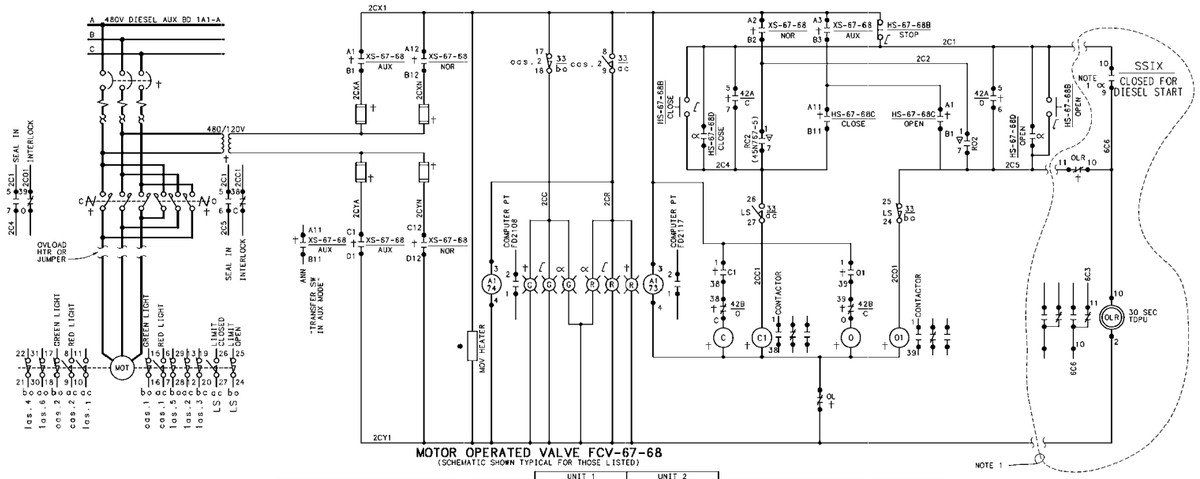

MOTOR OPERATED VALVE FCV-67-68

(SCHEMATIC SHOWN TYPICAL FOR THOSE LISTED)

TVA VALVE NO.	VALVE NOMENCLATURE	UNIT 1 480V DIESEL AUX BD	UNIT 2 480V DIESEL AUX BD	CONTROL SWITCH	TRAIN	STATUS PWR ON	MON OPEN
FCV-67-66	EMER DSL ENG HTX SUPPLY VALVE FR HDR A	1A2-A	2A2-A	HS-67-66A, B, C, D; XS-67-66	A	A1-75	A1-72
FCV-67-67	EMER DSL ENG HTX SUPPLY VALVE FR HDR B	1B2-B	2B2-B	HS-67-67A, B, C, D; XS-67-67	B	B1-79	B1-72
FCV-67-68	EMER DSL ENG HTX SUPPLY VALVE FR HDR B	1A1-A	2A1-A	HS-67-68A, B, C, D; XS-67-68	A	A1-73	A1-74
FCV-67-65	EMER DSL ENG HTX SUPPLY VALVE FR HDR A	1B1-B	2B1-B	HS-67-65A, B, C, D; XS-67-65	B	B1-73	B1-74

NOTE:
1. DIESEL START SIGNAL AND TIME DELAY RELAY ARE APPLICABLE TO FCV-67-66 AND FCV-67-67 ONLY.

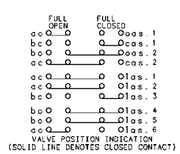

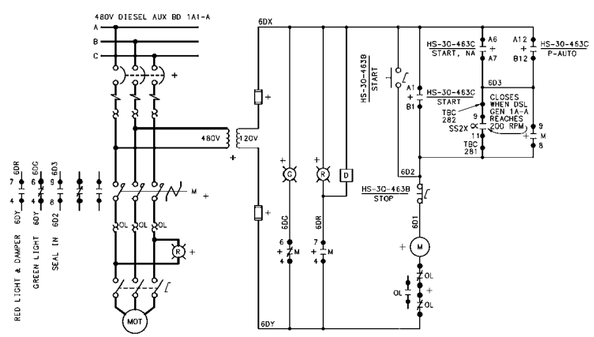

DIESEL GEN 1A-A MUFFLER RM EXH FAN

(SCHEMATIC SHOWN TYPICAL OF THOSE LISTED)

DIESEL GEN	480V DSL AUX BD	WIRE PREFIX	CONTROL SWITCH
1A-A	1A1-A	6D	HS-30-463B, C
1B-B	1B1-B	6D	HS-30-465B, C
2A-A	2A1-A	6D	HS-30-464B, C
2B-B	2B1-B	6D	HS-30-466B, C

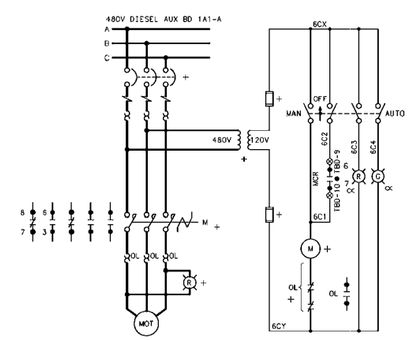

DIESEL GEN 1A-A AIR COMPR 2

(SCHEMATIC SHOWN TYPICAL FOR THOSE LISTED)

DIESEL GEN	COMPRESSOR 2 480V DSL AUX BD	COMPRESSOR 1 480V DSL AUX BD
1A-A	1A1-A	1A2-A
1B-B	1B1-B	1B2-B
2A-A	2A1-A	2A2-A
2B-B	2B1-B	2B2-B

SYMBOLS:
- ● EQUIPMENT LOCATED ON ASSOCIATED EQUIPMENT
- ▽ EQUIPMENT LOCATED ON DIESEL GEN REL PANEL
- EQUIPMENT LOCATED ON AUX BOILER FLAME SAFEGUARD PANEL
- ⊗ EQUIPMENT LOCATED ON DIESEL GEN LOCAL CONTROL PANEL
- ✱ EQUIPMENT LOCATED ON UNIT CONTROL BD IN MAIN CONT RM
- † EQUIPMENT LOCATED ON MOTOR CONTROL CENTER
- ⌈ EQUIPMENT LOCATED ON LOCAL CONTROL STATION

SEQUOYAH NUCLEAR PLANT
FINAL SAFETY
ANALYSIS REPORT

FIGURE 8.3.1-15

WIRING DIAGRAMS-480V DIESEL AUX POWER SH 1

(REVISED BY AMENDMENT 19)

CAD MAINTAINED DRAWING

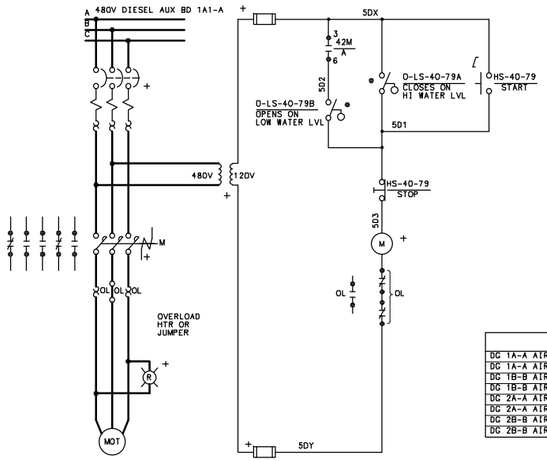

DIESEL GENERATOR BLDG SUMP PUMP A

(PMP B SIMILAR)

PUMP	480V DSL AUX BD	WIRE PREFIX	CONTROL SWITCH	LEVEL SWITCH
A	1A1-A	5D	HS-40-79	D-LS-40-79A,B
B	1B1-B	5D	HS-40-80	D-LS-40-80A,B

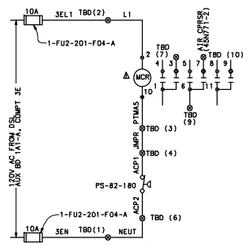

DIESEL GEN 1A-A AIR CPRSR 1

(OTHERS SIMILAR)

NOMENCLATURE	DSL AUX BD	COMPT	PRESSURE SW
DG 1A-A AIR CPRSR 1	1A1-A	3E	PS-82-180
DG 1A-A AIR CPRSR 2	1A1-A	3E	PS-82-181
DG 1B-B AIR CPRSR 1	1B1-B	3E	PS-82-210
DG 1B-B AIR CPRSR 2	1B1-B	3E	PS-82-211
DG 2A-A AIR CPRSR 1	2A1-A	3E	PS-82-240
DG 2A-A AIR CPRSR 2	2A1-A	3E	PS-82-241
DG 2B-B AIR CPRSR 1	2B1-B	3E	PS-82-270
DG 2B-B AIR CPRSR 2	2B1-B	3E	PS-82-271

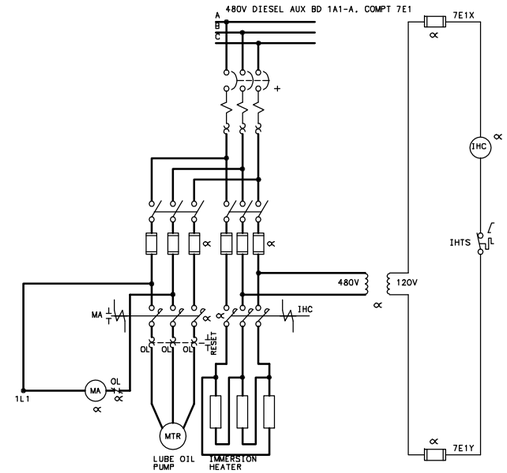

DIESEL GENERATOR 1A-A ENGINE 1A1 WATER HEATER AND LUBE OIL CIRCULATING PUMP

(SCHEMATIC SHOWN TYPICAL OF THOSE LISTED)

DSL GEN	ENG	480V DSL AUX BD	TRAIN
1A-A	1A1	1A1-A	A
	1A2	1A2-A	A
1B-B	1B1	1B1-B	B
	1B2	1B2-B	B
2A-A	2A1	2A1-A	A
	2A2	2A2-A	A
2B-B	2B1	2B1-B	B
	2B2	2B2-B	B

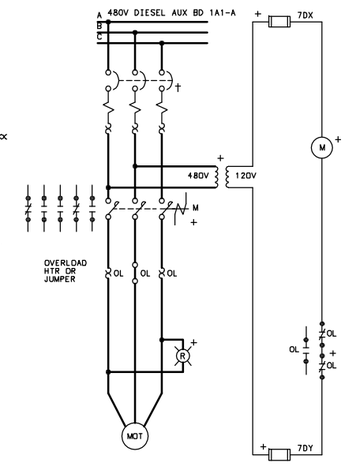

DIESEL GEN 1A-A ENG 1A1 AC AUX LUBE OIL CIRC PMP

(SCHEMATIC TYPICAL FOR THOSE LISTED)

DSL GEN	ENG	480V DSL AUX BD	WIRE PREFIX	FUSE UNIDS
1A-A	1A1	1A1-A		1-FU2-82-1A1B-A
1A-A	1A2	1A2-A		1-FU2-82-1A2B-A
1B-B	1B1	1B1-B		1-FU2-82-1B1B-B
1B-B	1B2	1B2-B		1-FU2-82-1B2B-B
2A-A	2A1	2A1-A		2-FU2-82-2A1B-A
2A-A	2A2	2A2-A		2-FU2-82-2A2B-A
2B-B	2B1	2B1-B		2-FU2-82-2B1B-B
2B-B	2B2	2B2-B		2-FU2-82-2B2B-B

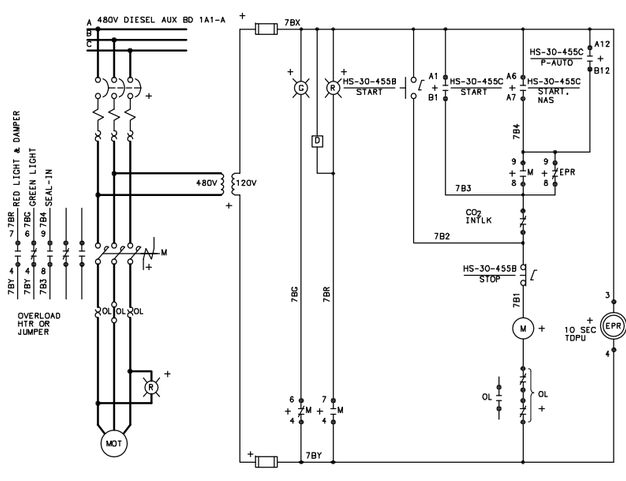

DIESEL GENERATOR 1A-A BATTERY HOOD EXHAUST FAN

(SCHEMATIC SHOWN TYPICAL OF THOSE LISTED)

	DSL GEN BATTERY HOOD EXHAUST FAN				480V DSL GEN 480V BOARD ROOM EXHAUST FAN				
DSL GEN	480V DSL AUX BD		CONTROL SWITCH		480V DSL AUX BD		CONTROL SWITCH		TRAIN
1A-A	1A1-A		HS-30-455B,C		1A2-A		HS-30-459B, C		A
1B-B	1B1-B		HS-30-457B,C		1B2-B		HS-30-461B, C		B
2A-A	2A1-A		HS-30-456B,C		2A2-A		HS-30-460B, C		A
2B-B	2B1-B		HS-30-458B,C		2B2-B		HS-30-462B, C		B

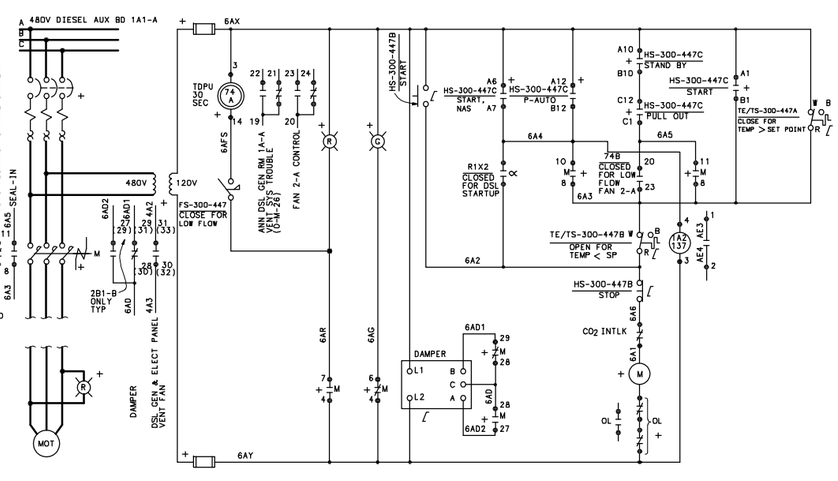

DIESEL GEN 1A-A ROOM EXHAUST FAN 1-A

(SCHEMATIC SHOWN TYPICAL OF THOSE SHOWN)

DSL GEN	FAN	480V DSL AUX BD	CONT SWS	TIME DLY RLY	FLOW SWITCHES	TN	THERMOSTAT HIGH	THERMOSTAT LOW
1A-A	1-A	1A1-A	1-HS-300-447B, C	74A	FS-300-447	A	TE/TS-300-447A	TE/TS-300-447B
1A-A	2-A	1A2-A	1-HS-300-451B, C	74B	FS-300-451	A	TE/TS-300-451A	TE/TS-300-451B
1B-B	1-B	1B1-B	1-HS-300-449B, C	74A	FS-300-449	B	TE/TS-300-449A	TE/TS-300-449B
1B-B	2-B	1B2-B	1-HS-300-453B, C	74B	FS-300-453	B	TE/TS-300-453A	TE/TS-300-453B
2A-A	1-A	2A1-A	2-HS-300-448B, C	74A	FS-300-448	A	TE/TS-300-448A	TE/TS-300-448B
2A-A	2-A	2A2-A	2-HS-300-452B, C	74B	FS-300-452	A	TE/TS-300-452A	TE/TS-300-452B
2B-B	1-B	2B1-B	2-HS-300-450B, C	74A	FS-300-450	B	TE/TS-300-450A	TE/TS-300-450B
2B-B	2-B	2B2-B	2-HS-300-454B, C	74B	FS-300-454	B	TE/TS-300-454A	TE/TS-300-454B

SYMBOLS:

- ✱ - EQUIPMENT LOCATED IN MAIN CONTROL ROOM
- + - EQUIPMENT LOCATED ON MOTOR CONTROL CENTER
- ⌐ - EQUIPMENT LOCATED ON LOCAL CONTROL STATION
- ∝ - EQUIPMENT LOCATED ON LOCAL PANEL
- ● - EQUIPMENT LOCATED AT OR NEAR LOCAL CONTROL STATION
- △ - EQUIPMENT LOCATED ON AIR DRYER CONTROL PANEL

SEQUOYAH NUCLEAR PLANT
FINAL SAFETY
ANALYSIS REPORT

FIGURE 8.3.1-16

WIRING DIAGRAMS-480V DIESEL AUX POWER SH 3

(REVISED BY AMENDMENT 30)

CAD MAINTAINED DRAWING

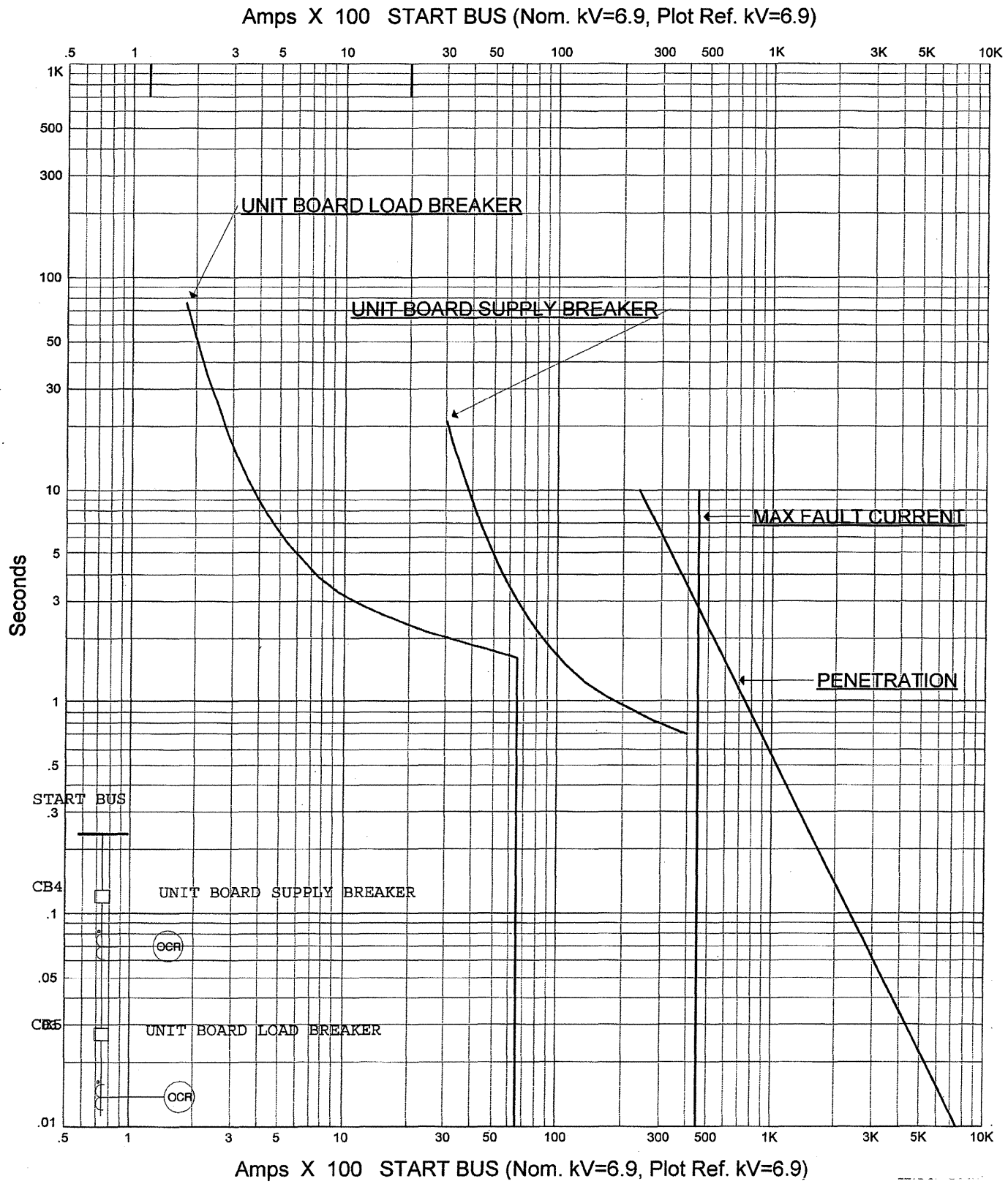

FIGURE 8.3.1-17 6900 Volt Containment Penetration Protection

Revised by Amendment 23

Best Available Historical Image

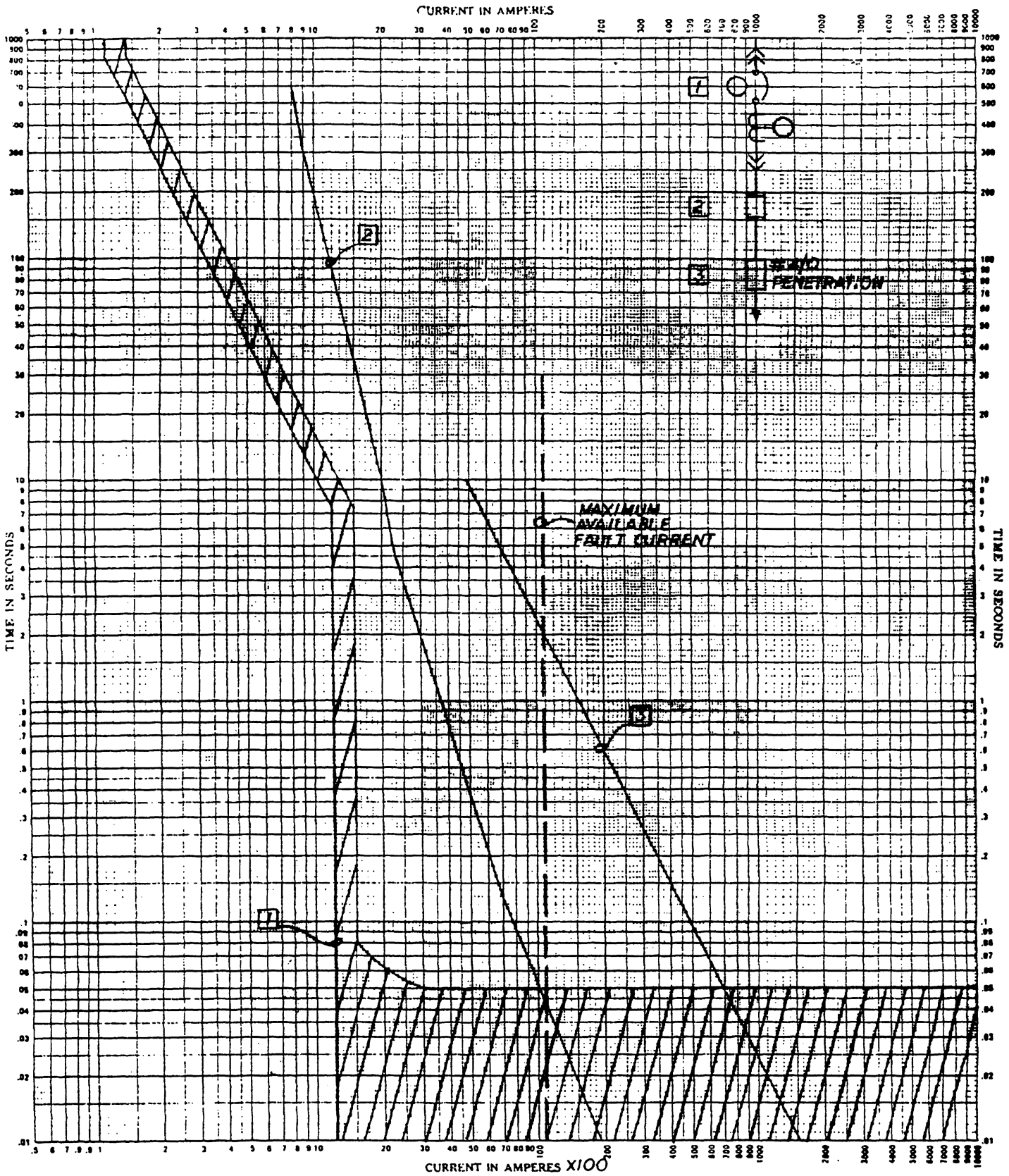

FIGURE 8.3.1-18 480 Volt Containment Penetration Protection

Revised by Amendment 13

Best Available Historical Image
Best Available Historical Image

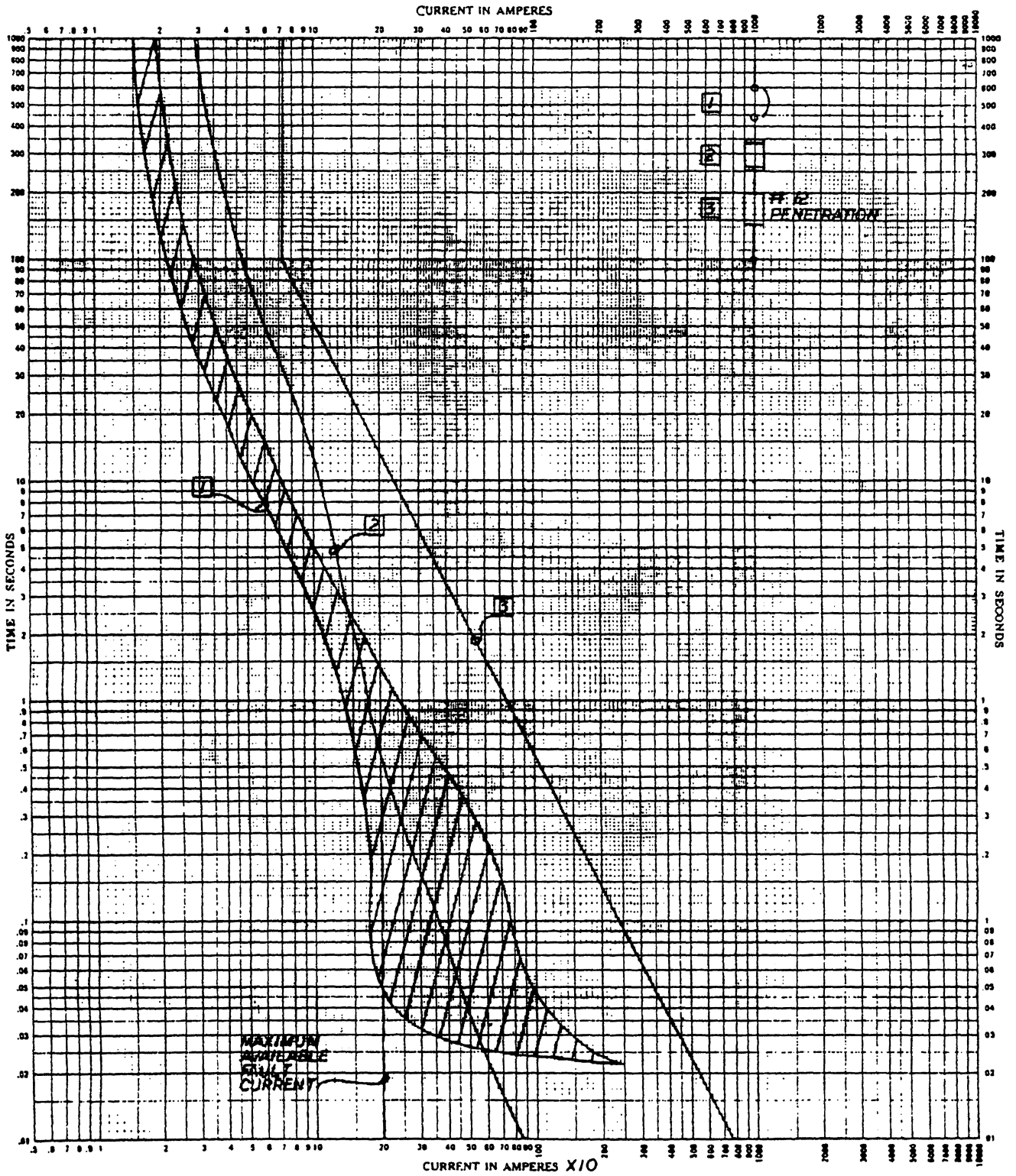

FIGURE 8.3.1-19 120 Volt A.C Containment Penetration Protection

Revised by Amendment 13

Best Available Historical Image
Best Available Historical Image

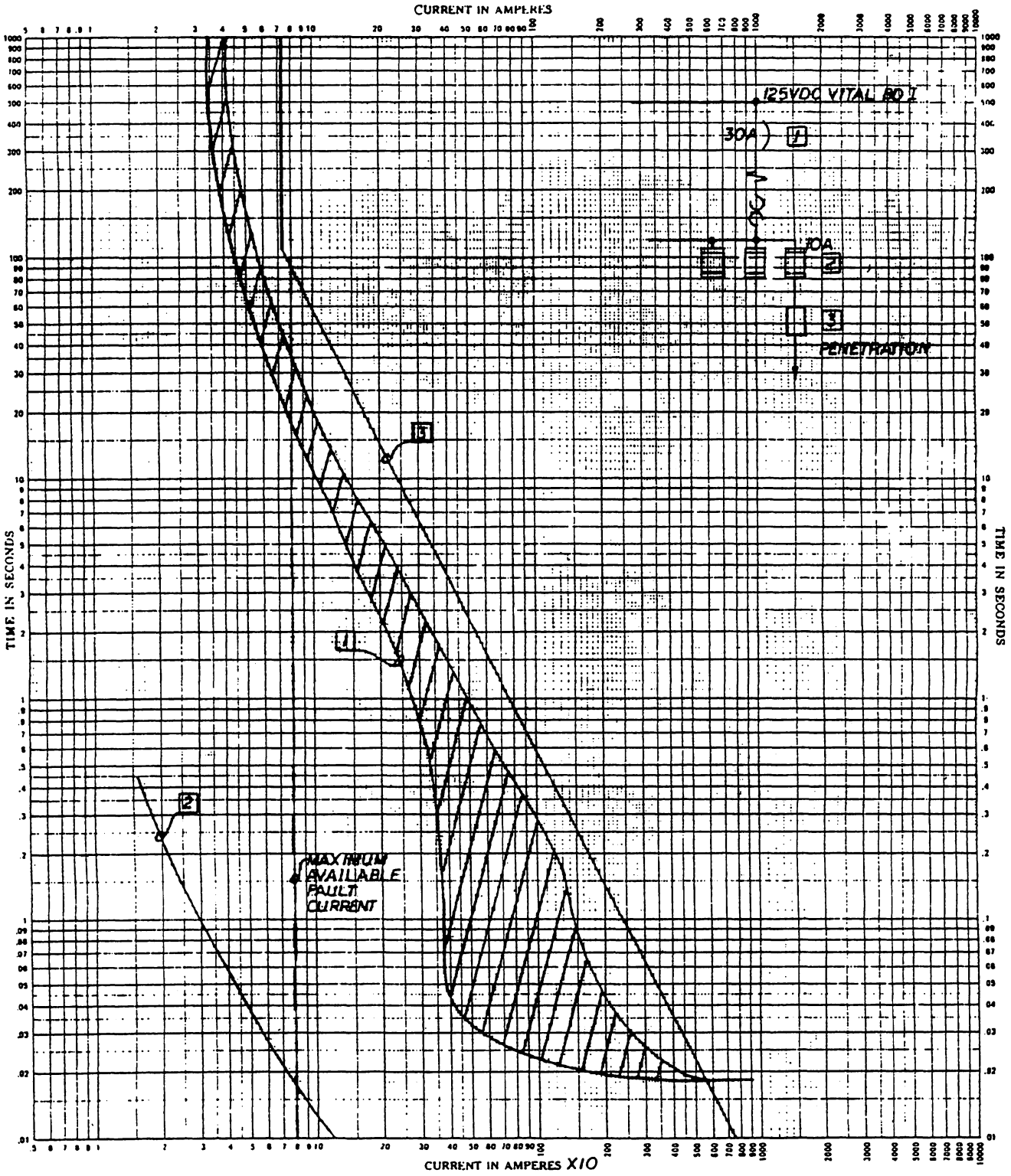

FIGURE 8.3.1-20 125 Volt D.C. Containment Penetration Protection

Revised by Amendment 13

ELECTRICAL PENETRATIONS						
ELECTRICAL PENETRATION NUMBER	SLEEVE AK NUMBER	SLEEVE SIZE	ELEVATION	AZIMUTH	REMARKS	VOS VOL. (REF 8.3.1.5)
1	X-121E	18"	710'-9"	56°-30'	REACTOR COOLANT PUMPS	5
2	X-122E	18"	712'-6"	120°-30'	REACTOR COOLANT PUMPS	5
3	X-123E	18"	697'-0"	243°-30'	REACTOR COOLANT PUMPS	5
4	X-124E	18"	696'-0"	308°-30'	REACTOR COOLANT PUMPS	5
5	X-125E	12"	773'-6"	248°-30'	SPARE	-
6	X-126E	18"	715'-6"	17°	FANS & MISC EQUIPMENT	12
7	X-127E	18"	715'-6"	163°	FANS & MISC EQUIPMENT	13
8	X-128E	18"	715'-6"	197°	FANS & MISC EQUIPMENT	12
9	X-129E	18"	715'-6"	343°	FANS & MISC EQUIPMENT	13
10	X-130E	18"	767'-0"	248°-30'	SPARE	-
11	X-131E	18"	756'-8"	248°-30'	POLAR CRANE & ICE CONDENSER	3 & 4
12	X-132E	18"	716'-8"	243°-30'	CONTROL ROD DRIVE POWER	4
13	X-133E	18"	716'-8"	240°	CONTROL ROD DRIVE POWER	4
14	X-134E	12"	715'-8"	97°	PRESSURIZER ELEC HEATERS	4
15	X-135E	12"	715'-6"	101°	PRESSURIZER ELEC HEATERS	12
16	X-136	12"	715'-6"	114°	PRESSURIZER ELEC HEATERS	13
17	X-137E	12"	715'-6"	118°-30'	PRESSURIZER ELEC HEATERS	4
18	X-138E	12"	715'-6"	93°	LOW LEVEL INSTRUMENTATION CKTS	1
19	X-139E	12"	711'-6"	17°	PROCESS INSTRUMENTATION CH II	7
20	X-140E	12"	711'-6"	116°-30'	INCORE INSTRUMENTATION	2
21	X-141E	12"	697'0"	236°-30'	MISC POWER CIRCUITS	12
22	X-142E	12"	697'0"	78°-30'	INCORE INSTRUMENTATION	2
23	X-143E	12"	710'-0"	240°	NIS III, PAM I (INCORE T/C)	6,8
24	X-144E	12"	707'-6"	249°	MISC POWER CIRCUITS	4
25	X-145E	12"	752'-8"	248°-30'	CONTROL ROD POS DETECTION	2
26	X-146E	12"	748'-8"	248°-30'	CONTROL ROD DRIVE POWER	4
27	X-147E	12"	715'-6"	21°	MISC CONTROL AND POWER CKTS	3 & 4
28	X-148E	12"	715'-6"	25°	DIVISIONAL INSTR	2(TR B)
29	X-149E	12"	715'-6"	29°	MISC CONTROL CIRCUITS	3
30	X-150E	12"	711'-6"	21°	MISC CONTROL CIRCUITS	10
31	X-151E	12"	711'-6"	25°	NUCLEAR INSTR DET CHANNEL IV	9
32	X-152E	12"	711'-6"	29°	MISC POWER CIRCUITS	4
33	X-153E	12"	715'-6"	151°	LOW LEVEL INSTRUMENTATION CKTS	1
34	X-154	12"	715'-6"	155°	NON-DIVISIONAL INSTR	2
35	X-166E	12"	711'-6"	163°	MISC CONTROL & POWER CIRCUITS	3 & 4
36	X-156E	12"	711'-6"	151°	MISC CONTROL CIRCUITS	3
37	X-157E	12"	711'-6"	155°	MISC CONTROL CIRCUITS	11
38	X-158E	12"	711'-6"	159°	PROCESS INSTRUMENTATION CH I	6
39	X-159E	12"	715'-6"	201°	MISC LOW LEVEL CIRCUITS	1
40	X-160E	12"	715'-6"	205°	COMMUNICATION	3
41	X-155E	12"	715'-6"	159°	SPARE	-
42	X-162E	12"	711'-6"	201°	SPARE	-
43	X-163E	12"	711'-6"	205°	NUCLEAR INSTR DET CHANNEL I	6
44	X-164E	12"	711'-6"	209°	MISC CONTROL CIRCUITS	10
45	X-165E	12"	711'-6"	197°	PROCESS INSTRUMENTATION CH III	8
46	X-167E	12"	711'-6"	343°	MISC POWER CIRCUITS	4
47	X-170E	12"	711'-6"	339°	MISC CONTROL CIRCUITS	11
48	X-168E	12"	711'-6"	331°	NIS II, PAM II (INCORE T/C)	7
49	X-169E	12"	711'-6"	335°	PROCESS INSTRUMENTATION CH IV	9
50	X-161E	12"	715'-6"	209°	DIVISIONAL INSTR	2(TR A)
51	X-120E	12"	712'-6"	290°	MISC POWER CIRCUITS	13

SEQUOYAH NUCLEAR PLANT
FINAL SAFETY
ANALYSIS REPORT

FIGURE 8.3.1-21
ELECTRICAL PENETRATIONS
(REVISED BY AMENDMENT 18)

CAD MAINTAINED DRAWING

ELECTRICAL PENETRATIONS

ELECTRICAL PENETRATION NUMBER	SLEEVE ⅜" NUMBER	SLEEVE SIZE	ELEVATION	AZIMUTH	REMARKS	NO. WIRE SIZE (REF 8.3.1-4)
1	X-121E	18"	710'-9"	56°-30'	REACTOR COOLANT PUMPS	5
2	X-122E	18"	712'-6"	120°-30'	REACTOR COOLANT PUMPS	5
3	X-123E	18"	697'-0"	243°-30'	REACTOR COOLANT PUMPS	5
4	X-124E	18"	696'-0"	305°-30'	REACTOR COOLANT PUMPS	5
5	X-125E	12"	773'-6"	248°-30'	SPARE	-
6	X-126E	18"	715'-6"	17°	FANS & MISC EQUIPMENT	12
7	X-127E	18"	715'-6"	163°	FANS & MISC EQUIPMENT	13
8	X-128E	18"	715'-6"	197°	FANS & MISC EQUIPMENT	12
9	X-129E	18"	715'-6"	343°	FANS & MISC EQUIPMENT	13
10	X-130E	18"	767'-0"	248°-30'	SPARE	-
11	X-131E	18"	756'-6"	248°-30'	POLAR CRANE & ICE CONDENSER	3 & 4
12	X-132E	18"	716'-6"	243°-30'	CONTROL ROD DRIVE POWER	4
13	X-133E	18"	716'-6"	240°	CONTROL ROD DRIVE POWER	4
14	X-134E	12"	715'-6"	97°	PRESSURIZER ELEC HEATERS	4
15	X-135E	12"	715'-6"	101°	PRESSURIZER ELEC HEATERS	12
16	X-136E	12"	715'-6"	114°	PRESSURIZER ELEC HEATERS	13
17	X-137E	12"	715'-6"	118°-30'	PRESSURIZER ELEC HEATERS	4
18	X-138E	12"	715'-6"	93°	MISC	1
19	X-139E	12"	711'-6"	17°	PROCESS INSTRUMENTATION CH II	7
20	X-140E	12"	711'-6"	116°-30'	INCORE INSTRUMENTATION	2
21	X-141E	12"	697'-0"	236°-30'	MISC POWER CIRCUITS	12
22	X-142E	12"	697'-0"	78°-30'	INCORE INSTRUMENTATION	2
23	X-143E	12"	710'-0"	240°	NIS II & PAM III (INCORE T/C)	7
24	X-144E	12"	707'-6"	249°	MISC POWER CIRCUITS	4
25	X-145E	12"	752'-6"	248°-30'	CONTROL ROD POS DETECTION	2
26	X-146E	12"	748'-6"	248°-30'	CONTROL ROD DRIVE POWER	4
27	X-147E	12"	715'-6"	21°	MISC CONTROL AND POWER CKTS	3 & 4
28	X-148E	12"	715'-6"	25°	DIVISIONAL INSTRUMENTATION	2(TR B)
29	X-149E	12"	715'-6"	29°	MISC CONTROL CIRCUITS	3
30	X-150E	12"	711'-6"	21°	MISC CONTROL CIRCUITS	10
31	X-151E	12"	711'-6"	25°	NUCLEAR INSTR DET CHANNEL I	6
32	X-152E	12"	711'-6"	29°	MISC POWER CIRCUITS	4
33	X-153E	12"	715'-6"	151°	MISC	1
34	X-154E	12"	715'-6"	155°	NON-DIVISIONAL INSTR	2
35	X-166E	12"	711'-6"	163°	MISC CONTROL & POWER CIRCUITS	3 & 4
36	X-156E	12"	711'-6"	151°	MISC CONTROL CIRCUITS	3
37	X-157E	12"	711'-6"	155°	MISC CONTROL CIRCUITS	11
38	X-158E	12"	711'-6"	159°	PROCESS INSTRUMENTATION CH I	6
39	X-159E	12"	715'-6"	201°	MISC LOW LEVEL CIRCUITS	1
40	X-160E	12"	715'-6"		COMMUNICATION	3
41	X-155E	12"	715'-6"	159°	SPARE	-
42	X-162E	12"	711'-6"	201°	SPARE	-
43	X-163E	12"	711'-6"	205°	NUCLEAR INSTR DET CHANNEL IV	9
44	X-164E	12"	711'-6"	209°	MISC CONTROL CIRCUITS	10
45	X-165E	12"	711'-6"	197°	PROCESS INSTRUMENTATION CH III	8
46	X-167E	12"	711'-6"	343°	MISC POWER CIRCUITS	4
47	X-170E	12"	711'-6"	339°	MISC CONTROL CIRCUITS	11
48	X-168E	12"	711'-6"	331°	PAM I (INCORE T/C) CH I & NIS III	6 & 8
49	X-169E	12"	711'-6"	335°	PROCESS INSTRUMENTATION CH IV	9
50	X-161E	12"	715'-6"	209°	DIVISIONAL INSTR	2(TR A)
51	X-120E	12"	712'-6"	290°	MISC POWER CIRCUITS	13

SEQUOYAH NUCLEAR PLANT
FINAL SAFETY
ANALYSIS REPORT

FIGURE 8.3.1-22
ELECTRICAL PENETRATIONS
(REVISED BY AMENDMENT 13)

DRAWING SERVICES UNIT
PROCAD MAINTAINED DRAWING
THIS CONFIGURATION CONTROL DRAWING IS MAINTAINED BY THE SQN CAD UNIT AND IS PART OF THE TVA PROCADAM DATABASE.
COMPUTER GRAPHICS

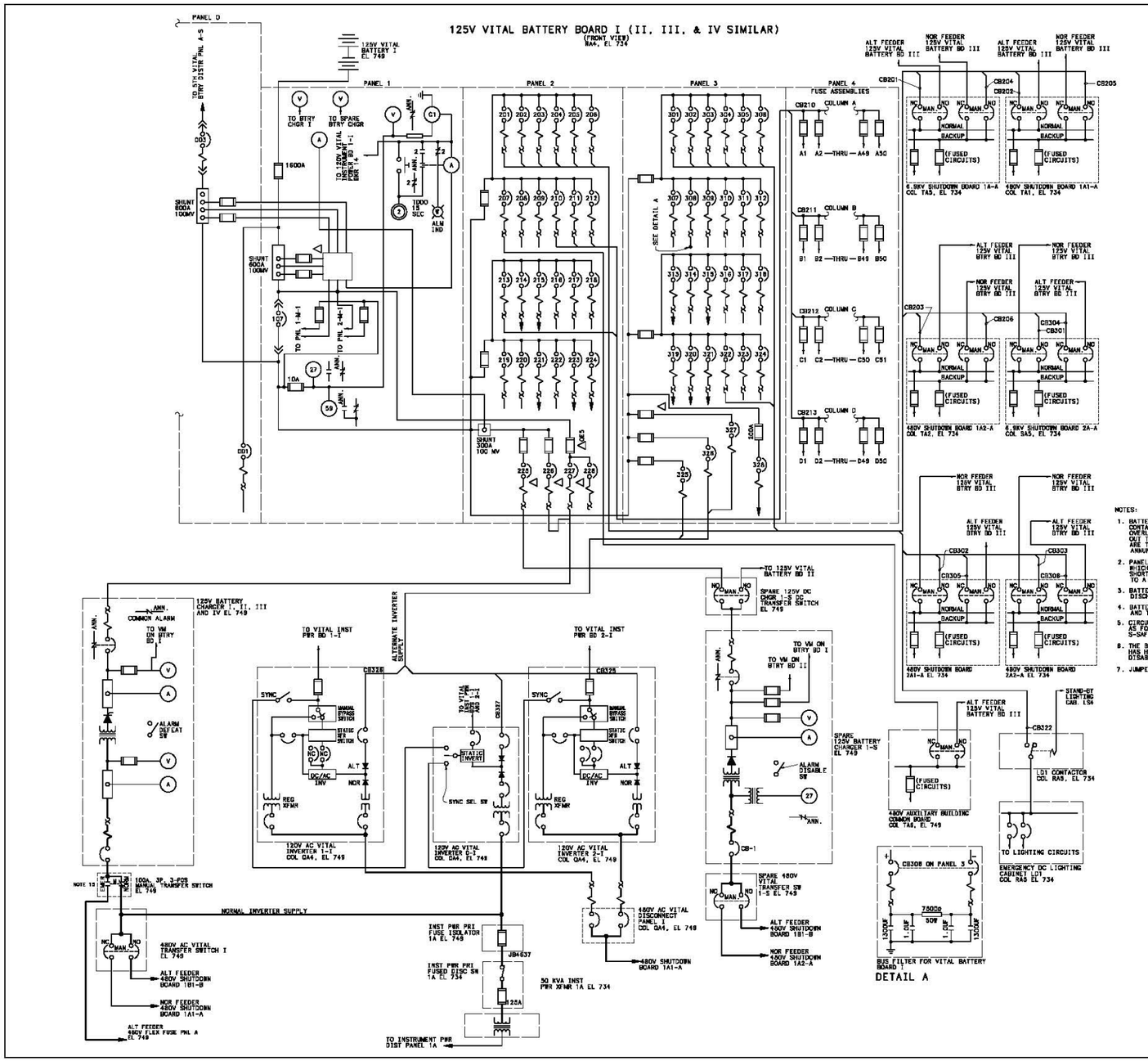

CIRCUIT SCHEDULE OTHER BDS SIMILAR						
PNL	BKR	FRAME	TRIP	CABLE (NOTE 12)	CIRCUIT	SAFETY CLASS
1	107	600			125V VITAL BATTERY I TIE TO 125V VITAL BTRY BD I	S
2	201	150	50	1B1 I	6.9KV SHUTDOWN BOARD 1A-A NOR BUS NOR FDR	S
2	202	150	50	1B11 I	480V SHUTDOWN BOARD 1A1-A NOR BUS NOR FDR	S
2	203	150	50	1B18 I	480V SHUTDOWN BOARD 1A2-A NOR BUS NOR FDR	S
2	204	150	50	1B4 I	6.9KV SHUTDOWN BOARD 1A-A BACKUP BUS ALT FDR	SBO S
2	205	150	50	1B14 I	480V SHUTDOWN BOARD 1A1-A BACKUP BUS ALT FDR	SBO S
2	206	150	50	1B19 I	480V SHUTDOWN BOARD 1A2-A BACKUP BUS ALT FDR	SBO S
2	207	150	50	B23	480V AUX BLDG COM BOARD NOR FDR	SBO NS
2	208	150	100			
2	209	150	50			S
2	210	150	30	----	UNIT 1 FUSE ASSEMBLIES COLUMN A	S
2	211	150	30	----	UNIT 1 FUSE ASSEMBLIES COLUMN B	S
2	212	150	30	----	UNIT 1 FUSE ASSEMBLIES COLUMN C	S
2	213	150	30	----	UNIT 1 FUSE ASSEMBLIES COLUMN D	S
2	214	150	30	1B44	UNIT 1 RCD DRIVE POWER SUPPLY SWITCH GEAR BKR 1A 1-L-115A	SBO NS
2	215	150	30	B45	GAS WASTE DISPOSAL PNL 0-L-2B	SBO NS
2	216	150	25			S
2	217	150	25			S
2	218	150	25			S
2	219	150	25			S
2	220	150	25			S
2	221	150	15	1M2492	RESPONSE TIME TESTING	SBO NS
2	222	150	15			SBO NS
2	223	150	15			
2	224	150	15	B1	BORIC ACID EVAPORATOR PACKAGE A 0-L-1A	SBO NS
2	225	225	200	B151	SPARE 125V DC CHARGER 1-S DC TRANSFER SW (NOTE 14)	S
2	226	225	200	B101	125V VITAL BATTERY CHARGER I, NOR SUPPLY (NOTE 14)	S
2	227	225	200	B101	125V VITAL BATTERY CHARGER I, ALT SUPPLY (NOTE 14)	S
2	228	225	100			S
						S
						S
3	301	150	50	2B2 I	6.9KV SHUTDOWN BOARD 2A-A NOR BUS ALT FDR	SBO S
3	302	150	50	2B12 I	480V SHUTDOWN BOARD 2A1-A NOR BUS ALT FDR	SBO S
3	303	150	50	2B17 I	480V SHUTDOWN BOARD 2A2-A NOR BUS ALT FDR	SBO S
3	304	150	50	2B3 I	6.9KV SHUTDOWN BOARD 2A-A BACKUP BUS NOR FDR	SBO S
3	305	150	50	2B13 I	480V SHUTDOWN BOARD 2A1-A BACKUP BUS NOR FDR	SBO S
3	306	150	50	2B18 I	480V SHUTDOWN BOARD 2A2-A BACKUP BUS NOR FDR	SBO S
3	307	150	50			S
3	308	150	40	----	125V VITAL BATTERY BOARD I BUS FILTER	NS
3	309	150	35			S
3	310	150	35			S
3	311	150	30			S
3	312	150	30			S
3	313	150	15	1B40 A	UNIT 1 AUXILIARY RELAY RACK 1-R-S4	SBO S
3	314	150	15			
3	315	150	15	1B47	UNIT 1 GENERATOR AUXILIARIES PANEL ANNUNICATOR 1-L-38	SBO NS
3	316	150	15			S
3	317	150	15			S
3	318	150	15		SPARE	S
3	319	150	15	1B23A	UNIT 1 REACTOR TRIP SWGR BYPASS BKR BYA 1-L-116	SBO S
3	320	150	15	1B38A	UNIT 1 REACTOR TRIP SWGR TRIP BKR RTA, 1-L-116	SBO S
3	321	150	15	2SG22DA	UNIT 2 AUXILIARY FEED PUMP TURBINE NOR FDR	S
3	322	150	100	B9	EMERGENCY DC LIGHTING CABINET LD-1	NS
3	323	150	15			S
3	324	150	15			S
3	325	225	175	B212 I	120V AC VITAL INSTRUMENT INVERTER 2-I (NOTE 14)	S
3	326	225	175	B30 I	120V AC VITAL INSTRUMENT INVERTER 1-I (NOTE 14)	S
3	327	225	175	B31 I	120V AC VITAL INSTRUMENT INVERTER 0-I (NOTE 14)	S
3	328	225	100	1B22	UNIT 1 ANNUNCIATOR PANEL 1-L-326 (NOTE 14)	SBO NS
0	001	800	800			NS
0	003	1600	600		125V BATTERY 3 DISTR PNL A-S	S

NOTES:

1. BATTERY BD BREAKERS ARE PROVIDED WITH ALARM CONTACTS WHICH CLOSE WHEN BREAKER TRIPS DUE TO OVERLOAD OR SHORT CIRCUIT. CONTACTS ARE WIRED OUT TO TERMINAL BLOCKS IN REAR OF EACH PANEL AND ARE TO BE CONNECTED IN PARALLEL FOR COMMON ANNUNCIATION.
2. PANEL 4 FUSES ARE PROVIDED WITH ALARM CONTACTS WHICH CLOSE WHEN FUSE OPENS DUE TO OVERLOAD OR SHORT CIRCUIT. THE CONTACT OF EACH FUSE IS WIRED TO A COMMON COLUMN ALARM BUSS FOR ANNUNCIATION.
3. BATTERY DELAY-AMMETER TO BE SET TO ALARM FOR A DISCHARGE OCCURRING FOR GREATER THAN 13 SECONDS.
4. BATTERY BOARDS ARE CLASS 1 AS DEFINED IN IEEE 308 AND TVA PROCUREMENT SPECIFICATION 1357.
5. CIRCUIT SAFETY CLASSIFICATION WILL BE IDENTIFIED AS FOLLOWS:
   S-SAFETY RELATED. NS-NONSAFETY RELATED.
6. THE BATTERY BOARD MAIN FEEDER BREAKER D03 HAS HAD ITS AUTOMATIC TRIP FUNCTION DISABLED BY REMOVING TRIP PADDLE.
7. JUMPER FROM BREAKER 227 TO BREAKER 226.

NOTES: (CONTINUED)

8. DELETED
9. DELETED
10. DELETED
11. DELETED
12. THE BATTERY IS OPERABLE WITH EITHER 59 OR 60 CELLS. UNDER THE 59 CELL CONFIGURATION THE UNUSED CELL WILL BE STRAPPED OUT USING THE NORMAL VENDOR SUPPLIED INTER-TIER CABLES AND PLATES.
13. CIRCUIT DESIGNATED "SBO" IS NOT REQUIRED FOR STATION BLACK OUT AND SHALL BE MANUALLY TRIPPED WITHIN 45 MINUTES AFTER SBO INITIATION.
14. BREAKERS 225, 226, 227, 325, 326, 327 AND 328 MAY BE EITHER WESTINGHOUSE HKA BREAKERS OR CUTLER HAMMER, 400 AMP FRAME, MOLDED CASE SWITCHES WHICH DO NOT HAVE A THERMAL TRIP ELEMENT.
15. THE MANUAL TRANSFER SWITCH IS A 3-POSITION SWITCH (NORM-OFF-EMER). THAT IS SHOWN IN IT'S NORMAL CONFIGURATION.
16. THE DUTY CYCLE FOR VITAL BATTERIES I, II, III, AND IV ARE TESTED TO 751 AMPS FOR 0-1 MIN, 580 ±1 AMPS FOR 1 TO 45 MIN, AND 398 AMPS FOR 45 - 240 MINUTES. HIGHER CURRENT LEVELS MAY BE USED IN THE IEEE 450 SERVICE TEST NOT TO EXCEED THE MFR RATING FOR THE PERIOD.

SEQUOYAH NUCLEAR PLANT
FINAL SAFETY
ANALYSIS REPORT

FIGURE 8.3.2-1
WIRING DIAGRAMS 125V VITAL
BATTERY BOARD I SINGLE LINE
SHEET-1
(REVISED BY AMENDMENT 27)

CAD MAINTAINED DRAWING

TABLE OF CONTENTS

Section	Title	Page
9.0	AUXILIARY SYSTEMS	
9.1	FUEL STORAGE AND HANDLING	9.1-1
9.1.1	NEW FUEL STORAGE	9.1-1
9.1.1.1	Design Bases	9.1-1
9.1.1.2	Description	9.1-1
9.1.1.3	Safety Evaluation	9.1-1
9.1.2	SPENT FUEL STORAGE	9.1-2
9.1.2.1	Design Bases	9.1-2
9.1.2.2	Description	9.1-3
9.1.2.3	Safety Evaluation	9.1-4
9.1.3	SPENT FUEL PIT COOLING SYSTEM	9.1-6
9.1.3.1	Design Bases	9.1-6
9.1.3.2	System Description	9.1-8
9.1.3.3	Safety Evaluation	9.1-10
9.1.3.4	Tests and Inspections	9.1-11
9.1.3.5	Instrument Application	9.1-11
9.1.4	FUEL HANDLING SYSTEM	9.1-12
9.1.4.1	Design Bases	9.1-12
9.1.4.2	System Description	9.1-13
9.1.4.3	Design Evaluation	9.1-20
9.1.4.4	Tests and Inspections	9.1-23
9.1.4.5	References	9.1-23
9.1.5	INDEPENDENT SPENT FUEL STORAGE INSTALLATION (ISFSI)	9.1-23
9.1.5.1	Regulatory Basis	9.1-23
9.1.5.2	System Description	9.1-24
9.1.5.3	Dry Cask Storage Operations	9.1.25
9.1.5.4	Evaluation of 10CFR Part 50 Reactor Power & 10CFR Part 72 ISFSI Facilities' Interfaces	9.1-26
9.2	WATER SYSTEMS	9.2-1
9.2.1	COMPONENT COOLING SYSTEM	9.2-1
9.2.1.1	Design Bases	9.2-1
9.2.1.2	System Description	9.2-1
9.2.1.3	Components	9.2-4
9.2.1.4	Safety Evaluation	9.2-5
9.2.1.5	Leakage Provisions	9.2-6
9.2.1.6	Incidental Control	9.2-7
9.2.1.7	Instrument Applications	9.2-7
9.2.1.8	Malfunction Analysis	9.2-8
9.2.1.9	Tests and Inspections	9.2-8

TABLE OF CONTENTS

Section	Title	Page
9.2.2	ESSENTIAL RAW COOLING WATER (ERCW)	9.2-8
9.2.2.1	Design Bases	9.2-8
9.2.2.2	System Description	9.2-9
9.2.2.3	Safety Evaluation	9.2-12
9.2.2.4	Incident Control	9.2-14
9.2.2.5	Instrument Applications	9.2-14
9.2.2.6	Corrosion, Organic Fouling, and Environmental Qualification	9.2-15
9.2.2.7	Tests and Inspections	9.2-16
9.2.2.8	Design Codes	9.2-16
9.2.3	DEMINERALIZED WATER MAKEUP SYSTEM	9.2-16
9.2.3.1	Design Bases	9.2-16
9.2.3.2	System Descriptions	9.2-16
9.2.3.3	Safety Evaluation	9.2-17
9.2.3.4	Test and Inspection	9.2-18
9.2.3.5	Instrumentation Applications	9.2-18
9.2.4	POTABLE AND SANITARY WATER SYSTEMS	9.2-18
9.2.4.1	Potable Water System	9.2-18
9.2.4.2	Sanitary Water System	9.2-19
9.2.5	ULTIMATE HEAT SINK	9.2-20
9.2.5.1	Design Basis	9.2-20
9.2.5.2	Safety Evaluation	9.2-21
9.2.6	CONDENSATE STORAGE FACILITIES	9.2-23
9.2.6.1	Design Bases	9.2-23
9.2.6.2	System Design Description	9.2-24
9.2.6.3	Safety Evaluation	9.2-24
9.2.6.4	Tests and Inspections	9.2-25
9.2.6.5	Instrument Applications	9.2-25
9.2.7	RAW COOLING WATER SYSTEM	9.2-25
9.2.7.1	Design Basis	9.2-25
9.2.7.2	System Description	9.2-25
9.2.7.3	Safety Evaluation	9.2-26
9.2.7.4	Test and Inspections	9.2-26
9.2.7.5	Instrument and Controls	9.2-26
9.2.8	REFERENCES	9.2-27
9.3	PROCESS AUXILIARIES	9.3-1
9.3.1	COMPRESSED AIR SYSTEM	9.3-1
9.3.1.1	Design Basis	9.3-1
9.3.1.2	System Description	9.3-1

TABLE OF CONTENTS

Section	Title	Page
9.3.1.3	Safety Evaluation	9.3-2
9.3.1.4	Tests and Inspections	9.3-3
9.3.1.5	Instrumentation Applications	9.3-3
9.3.2	PROCESS SAMPLING SYSTEM	9.3-4
9.3.2.1	Design Basis	9.3-4
9.3.2.2	System Description	9.3-4
9.3.2.3	Safety Evaluation	9.3-5
9.3.2.4	Tests and Inspections	9.3-6
9.3.2.5	Instrumentation Applications	9.3-6
9.3.3	EQUIPMENT AND FLOOR DRAINAGE SYSTEM	9.3-6
9.3.3.1	Design Bases - Auxiliary, Turbine, and Reactor Building	9.3-6
9.3.3.2	System Design - Auxiliary and Reactor Building	9.3-7
9.3.3.3	Drains - Reactor Building	9.3-8
9.3.3.4	Design Evaluation	9.3-9
9.3.3.5	Tests and Inspections	9.3-9
9.3.3.6	Instrumentation Application	9.3-9
9.3.3.7	Drain - Auxiliary Building	9.3-9
9.3.4	CHEMICAL AND VOLUME CONTROL SYSTEM (CVCS)	9.3-10
9.3.4.1	Design Bases	9.3-10
9.3.4.2	System Description	9.3-12
9.3.4.3	Safety Evaluation	9.3-30
9.3.4.4	Tests and Inspections	9.3-32
9.3.4.5	Instrumentation Application	9.3-32
9.3.5	AUXILIARY CHARGING SYSTEM	9.3-33
9.3.5.1	Design Bases	9.3-33
9.3.5.2	System Design Description	9.3-33
9.3.5.3	Design Evaluation	9.3-34
9.3.5.4	Tests and Inspection	9.3-34
9.3.5.5	Instrument Application	9.3-34
9.4	HEATING, VENTILATING, AND AIR-CONDITIONING	9.4-1
9.4.1	CONTROL BUILDING	9.4-1
9.4.1.1	Design Bases	9.4-1
9.4.1.2	System Description	9.4-3
9.4.1.3	Safety Evaluation	9.4-6
9.4.1.4	Test and Inspection	9.4-7

TABLE OF CONTENTS

Section	Title	Page
9.4.2	AUXILIARY BUILDING	9.4-7
9.4.2.1	Design Bases	9.4-7
9.4.2.2	System Description	9.4-8
9.4.2.3	Safety Evaluation	9.4-14
9.4.2.4	Inspection and Testing Requirements	9.4-14
9.4.3	RADWASTE AREA	9.4-15
9.4.3.1	Design Bases	9.4-15
9.4.3.2	System Description	9.4-15
9.4.3.3	Safety Evaluation	9.4-15
9.4.3.4	Test and Inspection Requirements	9.4-15
9.4.4	TURBINE BUILDING	9.4-15
9.4.4.1	Design Bases	9.4-15
9.4.4.2	Ventilation	9.4-15
9.4.4.3	Safety Evaluation	9.4-18
9.4.4.4	Inspection and Testing Requirements	9.4-18
9.4.5	DIESEL GENERATOR BUILDING	9.4-18
9.4.5.1	Design Bases	9.4-18
9.4.5.2	System Description	9.4-18
9.4.5.3	Safety Evaluation	9.4-19
9.4.5.4	Test and Inspections	9.4-20
9.4.6	CONDENSATE DEMINERALIZER BUILDING ENVIRONMENTAL CONTROL SYSTEM	9.4-20
9.4.6.1	Design Bases	9.4-20
9.4.6.2	System Description	9.4-20
9.4.6.3	Safety Evaluation	9.4-21
9.4.6.4	Inspection and Testing Requirement	9.4-21
9.4.7	REACTOR BUILDING PURGE VENTILATING SYSTEM	9.4-21
9.4.7.1	Design Bases	9.4-21
9.4.7.2	System Description	9.4-21
9.4.7.3	Safety Evaluation	9.4-23
9.4.7.4	Inspection and Testing Requirements	9.4-25
9.4.8	CONTAINMENT AIR COOLING SYSTEM	9.4-25
9.4.8.1	Design Bases	9.4-25
9.4.8.2	System Description	9.4-26
9.4.8.3	Safety Evaluation	9.4-28
9.4.8.4	Test and Inspection Requirements	9.4-28

TABLE OF CONTENTS

Section	Title	Page
9.4.9	CONDENSATE DEMINERALIZER WASTE EVAPORATOR BUILDING ENVIRONMENTAL CONTROL SYSTEM	9.4-28
9.4.9.1	Design Bases	9.4-28
9.4.9.2	System Description	9.4-28
9.4.9.3	Safety Evaluation	9.4-29
9.4.9.4	Inspection and Testing Requirements	9.4-29
9.4.10	POSTACCIDENT SAMPLING VENTILATION SYSTEM	9.4-29
9.4.10.1	Design Bases	9.4-29
9.4.10.2	System Description	9.4-29
9.4.10.3	Safety Evaluation	9.4-30
9.4.10.4	Inspection and Testing Requirements	9.4-30
9.4.11	References	9.4-30
9.5	OTHER AUXILIARY SYSTEMS	9.5-1
9.5.1	FIRE PROTECTION SYSTEM	9.5-1
9.5.1.1	Design Basis	9.5-1
9.5.2	PLANT COMMUNICATIONS SYSTEM	9.5-1
9.5.2.1	Design Bases	9.5-1
9.5.2.2	General Description	9.5-1
9.5.2.3	Evaluation	9.5-5
9.5.2.4	Inspection and Tests	9.5-6
9.5.3	LIGHTING SYSTEMS	9.5-6
9.5.3.1	Design Bases	9.5-6
9.5.3.2	Description of the Plant Lighting Systems	9.5-7
9.5.3.3	Diesel Generator Building Lighting System	9.5-8
9.5.3.4	Functions of the Lighting System	9.5-8
9.5.3.5	Inspection and Testing Requirements	9.5-8
9.5.4	DIESEL GENERATOR FUEL OIL SYSTEM	9.5-8
9.5.4.1	Design Bases	9.5-8
9.5.4.2	Description	9.5-9
9.5.4.3	Safety Evaluation	9.5-10
9.5.4.4	Inspection and Testing Requirements	9.5-10
9.5.5	DIESEL GENERATOR COOLING WATER SYSTEM	9.5-11
9.5.6	DIESEL GENERATOR STARTING SYSTEM	9.5-11
9.5.7	DIESEL GENERATOR LUBRICATION SYSTEM	9.5-11

TABLE OF CONTENTS

Section	Title	Page
9.5.8	HYDROGEN SYSTEM	9.5-12
9.5.8.1	Design Bases	9.5-12
9.5.8.2	System Description	9.5-12
9.5.8.3	Design Evaluation	9.5-12
9.5.8.4	Tests and Inspections	9.5-12
9.5.8.5	Instrumentation Application	9.5-13
9.5.9	NITROGEN SYSTEM	9.5-13
9.5.9.1	Design Bases	9.5-13
9.5.9.2	System Description	9.5-13
9.5.9.3	System Evaluation	9.5-13
9.5.9.4	Instrumentation Application	9.5-13
9.5.10	POSTACCIDENT SAMPLING FACILITY	9.5-14
9.5.10.1	Design Basis	9.5-14
9.5.10.2	Facilities	9.5-14
9.5.10.3	Design Evaluation	9.5-15
9.5.10.4	Tests and Inspections	9.5-15
9.5.11	REFERENCES	9.5-15

LIST OF TABLES

Number	Title
9.1.3-1	Spent Fuel Pit Cooling System Storage Cases
9.1.3-2	Spent Fuel Pit Cooling System Design and Operating Parameters
9.1.3-3	Deleted
9.1.5-1	Radioactivity Release (Curies) in a Cask Drop Accident Compared to Release in a Fuel Handling Accident
9.1.5-2	10CFR Part 50 Reactor Power & 10CFR Part 72 ISFSI Facilities Interface Documents
9.1.3-4	SFP Cooling and Cleanup System Thermal Design Parameters Summary
9.2.1-1	Component Cooling Water System Component Design Data Per Unit Of Equipment
9.2.1-2	Component Cooling Water System Malfunction Analysis
9.2.2-1	Essential Raw Cooling Water System Pump Design Data for Two Unit Plant Operation
9.2.2-2	Essential Raw Cooling Water System Malfunction Analysis
9.2.7-1	Raw Cooling Water System Pump Design Data
9.3.1-1	Auxiliary Control Air Component Design Data
9.3.2-1	Process Sampling System - Sample Locations and Data
9.3.4-1	Chemical and Volume Control System Design Parameters
9.3.4-2	Principal Component Data Summary
9.4.1-1	Regulatory Guide 1.52 (Rev.2) Section Applicability For The Main Control Room Air Cleanup Subsystem
9.4.7-1	Purge and Ventilation Containment Isolation Valves
9.5.2-1	Communication Equipment Availability Table
9.5.10-1	Postaccident Reactor Coolant Water Online Analysis Capabilities

LIST OF FIGURES

Number	Title
9.1.1-1	Fuel Storage and Handling
9.1.1-2	New Fuel Storage Racks
9.1.2-1	Isometric View of a Typical Spent Fuel Storage Rack
9.1.2-2	Module Layout of the Sequoyah Spent Fuel Pool and Cask Pit
9.1.3-1	Spent Fuel Pit Cooling System
9.1.3-2	Spent Fuel Pit Cooling Pump Logic
9.1.4-1	Fuel Transfer System Layout
9.1.4-3	Typical Manipulator Crane
9.1.4-4	Typical Spent Fuel Pit Bridge
9.1.4-5	Rod Cluster Control Changing Fixture
9.1.4-6	Reactor Vessel Head Lifting Device
9.1.4-7	Reactor Internals Lifting Device
9.1.4-8	Typical Vessel Stud Tensioner
9.2.1-1	Component Cooling System
9.2.1-2	Flow Diagram, Component Cooling System
9.2.1-3	Component Cooling System
9.2.1-4	Flow Diagram, Component Cooling System
9.2.1-5	Head Requirements for CCS System
9.2.1-6	Component Cooling Thermal Barrier Booster Pump Logic
9.2.1-7	Component Cooling Pump Logic
9.2.2-1	Essential Raw Cooling Water System
9.2.2-2	Essential Raw Cooling Water System

LIST OF FIGURES

Number	Title
9.2.2-3	Essential Raw Cooling Water System
9.2.2-3a	Essential Raw Cooling Water System
9.2.2-4	Unit 2 - Essential Raw Cooling Water System
9.2.2-4a	Unit 1 - Essential Raw Cooling Water System
9.2.2-5	Essential Raw Cooling Water System
9.2.2-6	Essential Raw Cooling Water Pump Logic
9.2.3-1	Flow Diagram, Demineralized Water Storage and Distribution System
9.2.3-2	Flow Diagram, Demineralized Water and Primary Water
9.2.7-1	Flow Diagram, Raw Cooling Water
9.2.7-2	Flow Diagram, Raw Cooling Water
9.2.7-3	Flow Diagram, Raw Cooling Water
9.2.7-4	Flow Diagram, Raw Cooling Water
9.3.1-1	Control and Service Air System Simplified Flow Diagram
9.3.1-2	Flow Diagram, Service Air System
9.3.1-3	Auxiliary Air Compressor Logic
9.3.3-1	Flow Diagram, Reactor Building Floor and Equipment Drains
9.3.3-2	Flow Diagram, Aux Building Floor and Equipment Drains
9.3.4-1	Flow Diagram, Chemical and Volume Control System
9.3.4-2	Flow Diagram, CVCS Chemical Control
9.3.4-3	Flow Diagram, CVCS Chemical Control
9.3.4-4	Flow Diagram, CVCS Chemical Control
9.3.4-5	Charging Pump Logic
9.3.4-6	Boric Acid Pump Logic
9.3.6-1	Flow Diagram, Flood Mode Boration Makeup System

LIST OF FIGURES

Number	Title
9.4.1-1	Flow Diagram, Control Building HVAC
9.4.2-1	Flow Diagram, Auxiliary Building HVAC
9.4.2-2	Flow Diagram, Auxiliary Building HVAC
9.4.2-2a	Flow Diagram, Auxiliary Building HVAC
9.4.2-3	Flow Diagram, Auxiliary Building HVAC
9.4.2-4	Flow Diagram, Auxiliary Building HVAC
9.4.2-5	Flow Diagram, Auxiliary Building HVAC
9.4.5-1	Flow Diagram, Diesel Generator Building Air Flow
9.4.7-1	Flow Diagram, Reactor Building Heating and Ventilation Air Flow
9.4.10-1	Flow Diagram, HVAC
9.5.4-1	Flow Diagram - Fuel Oil
9.5.5-1	Diesel Engine Lube Oil and Water System
9.5.6-1	Diesel Starting Air System Flow Diagram

9.0 AUXILIARY SYSTEMS

9.1 FUEL STORAGE AND HANDLING

9.1.1 New Fuel Storage

9.1.1.1 Design Bases

1. Storage space will be provided for a total of approximately 146 fuel assemblies.

2. New fuel, up to 5.0% by weight U-235, will be stored dry in the new fuel storage facility but in an array such that K_{eff} will be less than 0.95 if flooded with unborated water or less than 0.98 if optimally moderated.

3. The new fuel storage facility shall be capable of withstanding loads imposed by the dead load of the fuel assemblies, loads resulting from the impact and handling of fuel assemblies and loads from 1/2 Safe Shutdown Earthquake (SSE) and SSE's. Any resulting damage shall not be such as to increase K_{eff} above 0.95 if flooded with unborated water or above 0.98 if optimally moderated. The facility shall not be required to withstand loads that would be imposed by dropping heavy objects onto it, but the movement of such object over it shall be administratively prohibited.

4. Consideration of criticality safety analyses is discussed in Subsection 4.3.2.

9.1.1.2 Description

The location of the new fuel storage vault is shown in Figure 9.1.1-1 and in Figures 1.2.3-4 and 1.2.3-8. Figure 9.1.1-2 shows the design of the new fuel storage racks.

9.1.1.3 Safety Evaluation

The racks are individual vertical cells fastened together in a 4 x 5 array forming modules that are firmly bolted to embedded plates in the floor of the new fuel vault. The new fuel racks, including supports, are made of austenitic stainless steel and are constructed so that it is impossible to insert fuel assemblies except in prescribed locations having a minimum center-to-center spacing of 21 inches in both directions. However, to preclude criticality during optimum moderation conditions, 34 of the 180 cells are physically blocked to prevent use (configuration shown in Technical Specification Figure 4.3.1.2-1). The spacing is sufficient to assure K_{eff} <0.95 even if immersed in unborated water or $K_{eff} \leq$ 0.98 if optimally moderated by being enveloped by an aqueous foam or mist. The new fuel storage racks are designed in accordance with AISC, Sixth Edition, 1963. The new fuel storage vault is designed in accordance with ACI 318-1963.

The racks and the anchor bolts which hold them in place, have been designed to withstand SSE, 1/2 SSE, and shipping and handling loads as well as the dead load of the fuel assemblies. They can withstand impacts imposed by bumping them with objects normally handled in the new fuel pit including fuel assemblies and tools.

With new fuel in storage vaults, movement of heavy objects over the facility is administratively prohibited so that the fuel will not be damaged from heavy falling objects. The facility is shared between the two units; however, this does not increase the potential for damage to the new fuel. Sharing of the new fuel storage between two operating reactors has no effect on the safety or operation of the plant.

The details of the seismic design and testing procedures are presented in Section 3.7.

9.1.2 Spent Fuel Storage

9.1.2.1 Design Bases

1. Spent fuel storage space will be provided for a total of 10 cores (193 per core) plus 161 extra storage positions. However, only 159 of the 161 extra storage spaces may be utilized due to physical obstructions. Therefore, 2089 total spaces are available for fuel assembly storage. Storage space for full core offload capability is an operating strategy, maintaining full core offload capability in the spent fuel pool is not a licensing requirement.

2. Spent fuel storage racks are designed for new fuel enriched to a maximum of 5.0% by weight U-235 with K_{eff} less than 1.0 when flooded with unborated water and considering uncertainties. With partial credit for dissolved boron in the pool, K_{eff} is less than or equal to 0.95 with 300 ppm boron for normal conditions.

   The racks are regionalized into three arrangements as to what limitations exist on fuel assemblies stored in each region.

3. Administrative controls over fuel loading, discussed in Section 4.3.2.7, assures that the fuel will be stored in an array such that K_{eff} will be less than 1.0 even if the water in the storage pit contains no boron. However, for some accident conditions, the presence of dissolved boron in the pool water is taken into account as a realistic initial condition. This assumption can be made by applying the double contingency principle of ANSI N16.1-1975 which requires two unlikely, independent, concurrent events to produce a criticality accident. Maintaining 700 ppm dissolved boron in the pool shall meet the criteria for K_{eff} to be less than 0.95 with consideration of uncertainties.

4. The depth of shielding water over the spent fuel will be sufficient to limit the radiation dose to acceptable levels.

5. The spent fuel storage facility will be capable of withstanding loads imposed by the dead load of the fuel assemblies, loads resulting from the impact and handling of fuel assemblies, the maximum uplift force from the spent fuel bridge hoist and loads from 1/2 SSE and SSE's. Damage to spent fuel pit and storage racks will neither be sufficient to cause a loss of water below the top of the racks nor increase K_{eff} to 1.0.

6. Electrical and mechanical interlocks are provided to prevent the movement of loads over stored spent fuel.

7. The spent fuel shipping cask loading area will not be separated from the spent fuel storage area. A cask drop is not a credible event provided that heavy loads and safe load paths are in place in accordance with NUREG-0612 (SRP-9.1.2, NUREG-0800).

8. Adequate cooling water will be available for cooling the pool water (Section 9.1.3).

9. Consideration of criticality safety analysis is discussed in Section 4.3.2.

9.1.2.2 Description

The location of the spent fuel pit is shown in Figure 9.1.1-1 and in Figures 1.2.3-5 and 1.2.3-8. Figure 9.1.2-1 shows the design of the spent fuel storage racks. Figure 9.1.2-2 shows the spent fuel storage rack layout in the spent fuel pool and cask pit.

9.1.2.2.1 Storage Rack Structure

The high density Spent Fuel Storage Racks consists of 12 modular racks containing a total of 2091 storage cells with a 8.972" nominal pitch. All rack modules are of the so-called "free-standing" type in as much as the modules are not attached to the pool floor and they do not require any lateral braces or restraints. These rack modules rest on the pool floor on an adjustable support leg and bearing pad arrangement. All modules are of "non-flux trap" construction. The base plates on all rack modules extend out beyond the rack module wall such that the contiguous edges of the plates act to set a geometric separation between the facing cells in the modules.

The principal construction materials for the Spent Fuel Racks are SA240-Type 304L stainless steel sheet and plate stock, and SA564-630 (precipitation hardened stainless steel) for the adjustable support spindles. The only non-stainless material utilized in the rack is the neutron absorber material which is a boron carbide and aluminum-composite sandwich available under the patented product name "Boral". Boral is a thermal neutron absorbing material consisting of finely divided particles of boron carbide (B_4C) uniformly distributed in type 1100 aluminum and pressed and sintered in a hot rolling process. Boron carbide is a compound having a high boron content in a physically stable and chemically inert form. The 1100 alloy aluminum is a light-weight metal with high tensile strength which is protected from corrosion by a highly resistant oxide film. The two materials, boron carbide and aluminum, are chemically compatible and ideally suited for long-term use in the radiation, thermal and chemical environment of a spent fuel pool. Boral has garnered an excellent record of application in light water reactor fuel pools. The Boral sheets are axially centered with respect to the active fuel region and are sandwiched between cells.

All material used in the construction of the Sequoyah racks have an established history of in-pool usage. Their physical, chemical and radiological compatibility with the pool environment is well established. Consistent with recent practice, the fuel pool rack construction allows full venting of the Boral space. Representative Boral coupon samples are available on a mounting called a "tree" for monitoring the integrity of the neutron absorber material without disrupting the integrity of the storage system. The coupon tree is placed in a designated cell and surrounded by spent fuel. Specimens may be removed from the coupon tree array and certain physical and chemical properties measured from which the stability and integrity of Boral in the spent fuel storage cells may be inferred.

9.1.2.2.2 Storage Rack Interface With Spent Fuel Pool

Each independent and free-standing rack module is supported by four legs which are remotely adjustable. Each of the four legs rests on a pedestal bearing pad, which rests on the pool floor. The racks are not physically connected to the pool liner in any way, except for the pedestal bearing pad resting on the pool floor. The rack module support legs were engineered to accommodate variations in the flatness of the pool floor. Readily accessible sockets are provided in each support to enable remote leveling of the rack after its placement in the pool. The support legs also provide an under rack plenum for natural circulation of water through the storage cells. The placement of the rack pedestals in the spent fuel pool has been designed to preclude any support legs from being located over existing obstructions on the pool floor.

An adjustable support pedestal is utilized in the cask pit area to accommodate the 13th rack should the rack be installed in the future. The adjustable pedestal provided installation support during the new rack installation project, and was readjusted after use to the required dimensions of the 13th rack. The adjustable support pedestal provides vertical height increase for the rack placed in the cask pit as the cask pit floor is lower than the spent fuel pit floor and also to insure consistent fuel handling between racks located in the spent fuel pit and the cask pit storage rack.

Separate pedestal bearing pads are not used in the cask pit area, in that the adjustable pedestal has weight distribution pads integrated into the pedestal design to account for this weight bearing function.

9.1.2.3 Safety Evaluation

The spent fuel pit is a reinforced concrete structure which rests on the rock formation which underlies the Sequoyah site. The pit is designed to withstand 1/2 SSE and SSE forces and the maximum uplift force of the spent fuel bridge hoist without deformation, as is the Auxiliary Building in which the pit is located. The pit is lined with stainless steel plates to ensure water tightness. Radiological aspects of the facility are discussed in Chapter 12.

The spent fuel pit structure includes a fuel storage area, a spent fuel cask loading area, and a transfer canal which communicates with the refueling canal in the containment building. The following discussion shows how the facilities comply with the design bases given in Section 9.1.2.1:

1. The fuel storage area contains six 13 X 14 spent fuel storage rack arrays, two 12 X 14 spent fuel storage rack arrays, three 13 X 13 spent fuel storage rack arrays, and one 12 X 13 spent fuel storage rack array, for a total of 2091 storage locations. This provides storage space for 10 cores plus 161 additional storage spaces. Some storage spaces are "shadowed" by overhead obstructions. All but two of the "shadowed" spaces were pre-loaded prior to final rack positioning, therefore only 2089 cells can be utilized. The two inaccessible cells are located beneath the gate opening between the spent fuel pool and the transfer canal and are shadowed by a support plate for the transfer canal gate.

2. The spent fuel storage racks provide a nominal spacing of 8.972 inches between fuel assemblies. The nominal gap between rack arrays is 2 1/8 inch north-south and 1.5 inch east-west. The spacing is such that K_{eff} is below 1.0 if the racks are filled with fuel assemblies having the highest anticipated enrichment even when flooded with 2000 ppm borated water and including all mechanical tolerances. The design of the racks precludes criticality even with a misplaced fuel assembly on top of to the rack. The design of the racks precludes placement of a fuel assembly adjacent to the rack.

   Partial credit for dissolved boron in the pool water ensures the k_{eff} shall remain less than 0.95 with consideration of uncertainties and fuel mis-placement. The spent fuel pool boron concentration is nominally above 2000 ppm though only 700 ppm is required.

   The spent fuel racks are regionalized into three arrangements as to what limitations exist on fuel assemblies stored in each region.

3. The normal depth of water in the spent fuel storage area is about 39 feet 10 inches. The SFPCS maintains adequate water depth for shielding in the spent fuel pit, for spent fuel storage and for handling spent fuel over the storage racks. A low level alarm is annunciated in the control room when the water level drops to approximately two inches below normal pool level. The hoist on the spent fuel pit bridge is physically prevented from lifting the active fuel region of a spent fuel assembly higher than a level which is approximately 10 feet below the low level alarm setpoint due to the length of the long handle tool. Thus, the requirement of a water shield of 10 feet above the fuel assembly active fuel region is met.

4. The spent fuel storage racks shown in Figure 9.1.2-1 are designed to comply with the stress limits of ASME boiler and pressure vessel code, Section III, Subsection NF (1986).

   The racks have been shown by dynamic analysis to withstand SSE and 1/2 SSE loads as well as the dead load of the fuel assemblies. The racks are also capable of withstanding accidental drops of a fuel assembly or the gates which cover the slots between the pool and transfer canal and cask loading pit.

5. Electrical interlocks and mechanical stops are provided on the Auxiliary Building crane which prevent movement of loads over the area in which spent fuel is stored. The electrical interlocks are redundant and conform to IEEE standards. In addition, mechanical stops are provided which limit travel of the crane trolley when the spent fuel cask or other heavy loads are being moved to, from, or past the spent fuel pit. Figure 9.1.1-1 shows the region within which the interlocks prohibit movement of the main hook of the Auxiliary Building crane. The figure also shows the limit of hook travel imposed by the mechanical stops.

   Most operations, which must be carried out with the auxiliary building crane, can be performed without bypassing the interlocks and physical stops. The interlocks and physical stops are designed to prevent loads in excess of 2100 pounds from travel over the fuel assemblies in the spent fuel storage pool. These interlocks and physical stops will be verified operable within seven days prior to crane use and at least seven days thereafter during crane operation, except for those times when they are in the bypass condition under administrative control. The interlocks and physical stops will be returned and verified operable after operation in the bypassed condition. Only two loads greater than 2100 pounds are permitted to travel over fuel assemblies in the spent fuel pool. These are the spent fuel pool transfer canal gate and the spent fuel pool divider gate. Note that the movement of the gate at the cask loading area can be performed without bypassing interlocks because the auxiliary hook (10-ton capacity) which is used for this function is located 4 feet and 6 inches south of the main hook.

   The mechanical stops limit travel of the crane trolley when the spent fuel cask or other heavy loads are being moved past the spent fuel pool and when a spent fuel cask is moved to and from the cask loading area. The stops are engaged by the electrical interlocks.

   Engagement of stops is indicated by a red light located beneath the operator's cab. The light is visible from virtually any point on the operating floor. Three main line power disconnect pushbutton stations are located along the north wall of the Auxiliary Building and allow a supervisor on the operating floor to stop the crane at any time.

6. As shown in Figure 9.1.1-1, a wall separates the cask loading area from the fuel storage area. The gate is not to be installed.

7. Adequate cooling water is provided by a seismic Category I cooling system (Section 9.1.3).

8. All structures below the water line in the spent fuel pit, including the pit liner, spent fuel storage racks, tools, and gates, are of austenitic stainless steel. Other materials in the pit are the zirconium alloy of the fuel assemblies, the Boral neutron poison in the storage racks, and the Boral coupon tree. Additional radioactive material and associated shielding may be temporarily stored in the spent fuel pool or cask loading area. These materials are fully compatible in the spent fuel pit environment. Boral compatibility is described in Section 9.1.2.2.1.

   The spent fuel pit is a shared facility; however, this does not increase the potential for damage to the spent fuel. Aside from the fact that there is more spent fuel in one pit, sharing of the spent fuel storage facilities has no significant effect on the safety or operation of the plant. Ordinarily, only one reactor will be refueled at a time. If both reactors were refueled at one time, it would be necessary to coordinate use of the spent fuel pit bridge.

   As discussed above, the design of the facility satisfies the applicable sections of "Fuel Storage Facility Design Basis," Regulatory Guide 1.13.

9.1.3 Spent Fuel Pit Cooling System

The Spent Fuel Pit Cooling System is designed to remove from the spent fuel pit water the decay heat generated by stored spent fuel assemblies. Additional functions of the Spent Fuel Pit Cooling System (SFPCS) are to clarify and purify the water in the spent fuel pit, transfer canal, and refueling water storage tanks. If a warning of flood above plant grade is received when one or both reactor vessels are open or vented to the containment atmosphere, then the SFPCS will be modified as indicated in Paragraph 2.4A.4.2 to accomplish cooling the reactor core(s).

9.1.3.1 Design Bases

The Spent Fuel Pit Cooling System design parameters are given in Table 9.1.3-1.

9.1.3.1.1 Spent Fuel Pit Cooling

The Spent Fuel Pit Cooling System is designed to remove the decay heat from the spent fuel assemblies stored in the pit following back-to-back refueling of the two units. Analysis results for bounding discharge scenarios are described in Table 9.1.3-1. When the spent fuel pit contains the spent fuel resulting from back-to-back refueling of both units, the system can maintain the spent fuel pit water temperature at or below 150°F when two spent fuel pit pumps and two heat exchangers are in operation. If it is necessary to remove a complete core from one unit subsequent to the refueling of both units (assuming a 60 day period between the shutdown and the end of the previous refueling and the heat load from the spent fuel assemblies discharged during the 27 previous normal refuelings in the spent fuel pit and cask pit area) the time to beginning of core unloading will be adjusted so that 12 days have elapsed from time of shutdown to initiation of core unloading. For this scenario, the spent fuel pit cooling system can maintain the spent fuel pit water at or below 150°F using two trains of spent fuel cooling.

For all core off loading operations, actual pool heat load can also be used to establish an alternative shutdown to fuel movement interval. This requires the calculation of decay heat rates for the actual fuel assemblies stored in the pool as well as the fuel assemblies to be off loaded. When the total decay heat generation rate of fuel assemblies (SFP and core off load) is less than the maximum allowable heat load of the SFP cooling system, core unloading is acceptable.

For core off-load activities during a refueling outage, the heat load in the spent fuel pool is normally limited to 45 E+06 Btu/Hr. Alternatively, up to 55 E+06 Btu/Hr can be placed in the spent fuel pool within specific limitations on spent fuel pool cooling heat exchanger fouling and component cooling system supply temperatures less than the design temperature of 95°F.

Specific guidance in the form of allowable SFP decay heat curves for less than design conditions for SFP heat exchanger fouling and shell side cooling temperatures has been developed. The decay heat curves, provided in applicable design output documentation, allow outage specific variation in maximum SFP decay heat based on known values of SFP heat exchanger fouling factors and CCS temperatures. Operation of the SFPCCS within the constraints of heat load, SFP heat exchanger fouling and less than design values for CCS coolant temperatures ensures the maximum design temperatures of the SFP are not exceeded, should a loss of one SFP cooling train occur. Information in Table 9.1.3-4 provides a summary of maximum allowable decay heat loads and resultant SFP thermal parameters.

Localized boiling within the spent fuel storage racks has been evaluated for the highest allowable spent fuel decay heat load (55 MBtu/Hr). The conclusions of the evaluation indicated approximately 3.5°F margin to localized boiling exists between the maximum local water temperature and the local saturation temperature even at the higher allowable heat load. Additionally, the analysis has shown that, even though the maximum fuel clad temperature is greater than the local water saturation temperature, departure from nuclear boiling (DNB) will not occur; therefore, the fuel cladding integrity is maintained.

The system design incorporates two trains of equipment (plus a spare pump capable of operation in either train), either train being capable of removing more than 50 percent of the design heat load at design conditions. The flow through the pit provides sufficient mixing to assure uniform water conditions throughout the pit.

9.1.3.1.2 Spent Fuel Pit Dewatering Protection

System piping is arranged so that failure of any pipeline cannot drain the spent fuel pit below the water level required for radiation shielding.

9.1.3.1.3 Water Purification

The system's demineralizer and filter are designed to provide adequate purification to permit unrestricted access to the spent fuel storage area for plant personnel and maintain optical clarity of the spent fuel pit water. The optical clarity of the spent fuel pit water surface is maintained by use of the system's skimmers, strainer, and skimmer filter.

9.1.3.1.4 Flood Mode Cooling

Paragraph 2.4A.2.2 presents the design basis operation of the SFPCS when it may be used for reactor core cooling during flooded plant conditions.

9.1.3.2 System Description

The Spent Fuel Pit Cooling System flow diagram, shown in Figure 9.1.3-1, consists of two cooling trains (plus a backup pump capable of operation in either train), a purification loop, and a surface skimmer loop. The Spent Fuel Pit Cooling Pump logic is shown in Figure 9.1.3-2.

The Spent Fuel Pit Cooling System removes decay heat from fuel stored in the spent fuel pit. Spent Fuel is placed in the pit during the refueling sequence and stored there until it is shipped offsite or the spent fuel assemblies may be placed in interim storage at SQN Independent Spent Fuel Storage Installation (ISFSI) (Section 9.1.5). During a normal refueling, the system normally handles the heat loading from a complete core freshly discharged from each reactor, plus previous discharges which have decayed for more than a year. Heat is transferred from the Spent Fuel Pit Cooling System, through the heat exchangers to the Component Cooling System.

When the Spent Fuel Pit Cooling System is in operation, water flows from the spent fuel pit to one or both spent fuel pit pump suctions, is pumped through the tube side of the heat exchanger, and is returned to the pit. Each suction line, which is provided with a strainer, is located at an elevation four feet below the normal spent fuel pit water level, while the return line contains an anti-siphon hole near the surface of the water to prevent gravity drainage of the pit.

While the heat removal operation is in process, a portion of the spent fuel pit water may be diverted through a demineralizer and a filter to maintain spent fuel pit water clarity and purity. This purification loop is sufficient for removing fission products and other contaminants which may be introduced if a fuel assembly with defective cladding is transferred to the spent fuel pit.

The spent fuel pit demineralizer may be isolated, by manual valves, from the heat removal portion of the Spent Fuel Pit Cooling System. By so doing, the isolated demineralizer may be used in conjunction with a refueling water purification pump and filter to clean and purify the refueling water while spent fuel pit heat removal operations proceed. Connections are provided such that the refueling water may be pumped from either the refueling water storage tank or the refueling cavity of either unit, through the demineralizer and filter, and discharged to the refueling cavity or refueling water storage tank of either unit. Connections are also provided to allow clean-up of the water in the common transfer canal. Water can be drawn from the canal and is pumped by a refueling water purification pump through the spent fuel pit demineralizer and a refueling water purification filter before being returned to the transfer canal.

To further assist in maintaining spent fuel pit water clarity, the water surface is cleaned by a skimmer loop. Water is removed from the surface by the skimmers, pumped through a strainer and filter, and returned to the pit surface at three locations remote from the skimmers.

The spent fuel pit is initially filled with water that is approximately the same boron concentration as that in the refueling water storage tank. Borated water may be supplied from the refueling water storage tank via the refueling water purification pump connection, or by running a temporary line from the boric acid blender, located in the Chemical and Volume Control System directly into the pit. Demineralized water can also be added for makeup purposes (i.e., to replace evaporative losses).

The spent fuel pit water may be separated from the water in the transfer canal by a gate. The gate is installed so that the transfer canal may be drained to allow maintenance of the fuel transfer equipment.

A description of the operation of the SFPCS during flood mode operation is given in Section 2.4A.

9.1.3.2.1 Component Description

Spent Fuel Pit Cooling System Codes and Classifications are given in Section 3.2. Equipment design parameters are given in Table 9.1.3-2.

Spent Fuel Pit Pumps

The pumps are horizontal, centrifugal units. They can circulate spent fuel pit water through the heat exchangers, demineralizer, and filter. The pumps are controlled manually from a local station. A third pump is available to serve as a backup to either of the two pumps normally used for cooling the spent fuel pit water.

Spent Fuel Pit Skimmer Pump

This horizontal, centrifugal pump circulates surface water through a strainer and a filter and returns it to the pit.

Refueling Water Purification Pumps

These horizontal, centrifugal pumps can be used to circulate water from the transfer canal, the refueling cavity and the refueling water storage tank through the spent fuel pit demineralizer and a refueling water purification filter. The pumps are operated manually from a local station.

Spent Fuel Pit Heat Exchangers

The spent fuel pit heat exchangers are of the shell and U-tube type with the tubes welded to the tube sheet. Component cooling water circulates through the shell, and spent fuel pit water circulates through the tubes.

Spent Fuel Pit Demineralizer

This flushable, mixed-bed demineralizer is designed to improve pit water clarity and provide for unrestricted access by plant personnel to the pit working area.

Spent Fuel Pit Filter

The spent fuel pit filter is designed to improve the pit water clarity by removing submicron particles and provide for unrestricted access by plant personnel to the pit working area.

Spent Fuel Pit Skimmer Filter

The spent fuel pit skimmer filter is used to remove particles which are not removed by the strainer.

Refueling Water Purification Filters

The refueling water purification filters are designed to improve the clarity and purity of the refueling water in the refueling canal or in the refueling water storage tank by removing submicron particles.

Spent Fuel Pit Strainer

A strainer is located in each of the two spent fuel pit pump suction lines for removal of relatively large particles which might otherwise clog the spent fuel pit demineralizer or damage the spent fuel pit pumps.

Spent Fuel Pit Skimmer Strainer

The spent fuel pit skimmer strainer is designed to remove debris from the skimmer process flow.

Spent Fuel Pit Skimmers

Two spent fuel pit skimmers are provided to remove water from the spent fuel pit water surface in order to remove floating debris.

Valves

Manual stop valves are used to isolate equipment and manual throttle valves provide flow control. Valves in contact with spent fuel pit water are austenitic stainless steel or equivalent corrosion resistant material.

Piping

All piping in contact with spent fuel pit water is austenitic stainless steel. The piping is welded except where flanged connections are used to facilitate maintenance.

9.1.3.3 Safety Evaluation

9.1.3.3.1 Availability and Reliability

The Spent Fuel Pit Cooling System has no short term emergency function during an accident. This manually controlled system may be shutdown for limited periods of time for maintenance or replacement of malfunctioning components. The pit is sufficiently large that an extended period of time would be required for the water to heat up if cooling were interrupted (see Table 9.1.3-1). In the event of a failure of one spent fuel pit pump, the backup pump would be aligned and operated. In the event of loss of cooling to one spent fuel pit heat exchanger, cooling of spent fuel pit water could be maintained by the remaining equipment; however, the reduced heat removal capacity would result in elevation of the equilibrium spent fuel pit water temperature to a higher but acceptable temperature.

In the event that cooling capability was lost for an extended period, the pool water temperature would approach boiling. If the cooling systems are lost at a time coincident with the peak bulk temperature, the water loss by evaporation could reach a maximum of about 118 gpm for the Case 3 scenario described in Table 9.1.3-1. For this situation, it would take approximately 26 hours from the instant of loss of cooling to evaporate water to a level within 10 feet of the top of the active fuel. A seismically qualified line is available from the common discharge of the refueling water purification pumps to the spent fuel pool cooling loop. All piping, valves, and pumps from the RWST to the common discharge of the refueling water purification pumps are seismically qualified. Other sources for makeup are the demineralized water system and the fire protection system. Fire hoses located near the spent fuel pit are capable of supplying more than 103 gpm.

9.1.3.3.2 Spent Fuel Pit Dewatering

The most serious failure of the spent fuel pool storage and cooling system would be a complete loss of water in the storage pit. Several design provisions are in place to protect against the possibility of the pool draining to unacceptable levels. A gate between the transfer canal and the spent fuel pit is normally kept in place. The spent fuel pit cooling system suction connections enter near normal water level so that the pit cannot be siphoned. The 10" cooling water return line is truncated approximately 2.5 feet below normal water level. In addition, all cooling water return lines contain an anti-siphon hole to prevent any significant loss of water from the pit. These design features assure that the pit cannot be drained below two feet below normal water level. Minimum normal water level in the spent fuel pit is over 26 feet above the top of the active fuel region of the stored spent fuel.

The transfer canal has a drain connection in the bottom of the canal. The partially embedded line connects to a siphon breaker line. A valve in the anti-siphon line, located in a short run of un-embedded pipe, is locked open at all times except when the canal is to be drained. With this arrangement, if any un-embedded portion of the transfer canal drain line ruptures, the canal (and spent fuel pool during periods when the gate is removed) cannot be drained to a level below 713'6". At this level over 13 feet of water still remain over the active fuel region of the stored spent fuel, thus ensuring that the regulatory requirement [NUREG 0800 Section 9.1.3, Subsection III.e] of 10 feet of water over fuel is maintained at all times, including abnormal conditions.

9.1.3.3.3 Water Quality

Except for operation of this system in the flood mode of reactor cooling, only a very small amount of water is interchanged between the refueling canal and the spent fuel pit as fuel assemblies are transferred in the refueling process. Whenever a fuel assembly with defective cladding is transferred to the spent fuel pit, a small quantity of fission products may enter the spent fuel cooling water. The purification loop provided removes fission products and other contaminants from the water. By maintaining radioactivity concentrations in the spent fuel pit water at 0.01 mCi/cc or less, the exposure rate 3 feet above the surface of the pool is 2.5 mR/hr or less. The demineralizer and filtration equipment in the SFPCS will maintain the long term steady state concentration of radioactivity in the spent fuel pit water below 0.01 mCi/cc regardless of the number of spent fuel assemblies that are stored in the spent fuel pit. As the number of stored assemblies increases, the interval between required changing of the filter and of demineralizer resins may decrease slightly; however, changes are normally expected to occur no more often than once per refueling.

9.1.3.4 Test and Inspections

Active components of the Spent Fuel Pit Cooling System are either in continuous or intermittent use during normal plant operation. Periodic visual inspection and preventive maintenance are conducted in accordance with approved procedures.

9.1.3.5 Instrument Application

The instrumentation for the Spent Fuel Pit Cooling System is discussed below. Alarms and indicators are provided as noted.

9.1.3.5.1 Temperature

Instrumentation is provided to measure the temperature of the water in the spent fuel pit and give local indication as well as annunciation in the control room when normal temperatures are exceeded.

Instrumentation is also provided to give local indication of the temperature of the spent fuel pit water as it leaves the heat exchangers.

9.1.3.5.2 Pressure

Instrumentation is provided to give local indication of the pressure at points upstream and downstream of each pump and filter.

9.1.3.5.3 Flow

Instrumentation is provided to give local indication of the flow leaving the spent fuel pit filter and local indication of flow to the SFPCS pumps.

9.1.3.5.4 Level

Instrumentation is provided which gives an alarm in the control room when the water level in the spent fuel pit reaches either the high or low level condition.

9.1.4 Fuel Handling System

9.1.4.1 Design Bases

The Fuel Handling System consists of equipment and structures utilized for handling new and spent fuel assemblies in a safe manner.

The following design bases apply to the Fuel Handling System:

1. Fuel handling devices have provisions to avoid dropping or jamming of fuel assemblies during transfer operation.

2. Fuel lifting and handling devices are capable of supporting maximum loads under safe shutdown earthquake conditions.

3. The fuel transfer system, where it penetrates the containment, has provisions to preserve the integrity of the containment pressure boundary.

4. Cranes and hoists used to lift spent fuel employ lifting tools to limit maximum lift height so that the minimum required depth of water shielding is maintained.

9.1.4.2 System Description

The Fuel Handling Equipment consists of the equipment needed for refueling the reactor. Basically this equipment is comprised of:

1. Hoisting equipment, including:
   - auxiliary building crane
   - spent fuel pit crane
   - new fuel elevator
   - manipulator crane

2. Handling equipment, including:
   - spent fuel long handling tool, used with the spent fuel pit crane
   - new fuel short handling tool, used with the auxiliary building crane
   - rod cluster control (RCC) changing fixture located on the refueling canal wall
   - RCC changing fixture, portable, located in the spent fuel pit
   - burnable poison handling tool, used with the spent fuel pit crane
   - thimble plug handling tool, used with the spent fuel pit crane, or manipulator crane auxiliary hoist

3. A separate fuel transfer system for Unit 1 and Unit 2, which runs from the refueling RB canal, through the fuel transfer tube, and into the fuel transfer canal. This system includes:
   - fuel transfer tube with upenders at each end
   - fuel container used on the transfer car and upenders
   - fuel transfer car (fuel conveyor car, fuel transfer container)

The following structures, starting on the containment side, are associated with the Fuel Handling Equipment:

1. Refueling canal
2. Refueling cavity including the fuel transfer tube
3. Fuel transfer canal
4. Spent fuel pit including the cask loading area and the spent fuel racks
5. New fuel storage vault including the new fuel racks
6. Auxiliary building, including truck/rail unloading/loading area

New fuel is received in approved containers. The new fuel assemblies are removed from the containers within the ABSCE using the auxiliary building crane. The assemblies are inspected. The auxiliary building crane, in conjunction with a short handling tool can be used to unload the fuel to the new fuel storage vault or the new fuel elevator where it can be lowered and stored in the spent fuel pit.

New fuel can be delivered to the reactor by removing individual assemblies from the storage vault and placing them in the new fuel elevator. The assemblies are lowered into the transfer canal and are taken through the transfer system.

The fuel transfer system layout is shown on Figure 9.1.4-1.

The reactor is refueled with fuel handling equipment designed to handle spent fuel under water from the time it leaves the reactor vessel until it is placed in a cask for shipment from the site or the spent fuel assemblies may be placed in interim storage at SQN Independent Spent Fuel Storage Installation (ISFSI) (Section 9.1.5). Underwater transfer of spent fuel provides an effective, economic, and transparent radiation shield, as well as a reliable cooling medium for removal of decay heat. Boric acid is added to the water to insure subcritical conditions.

The fuel handling structures may be generally divided into the reactor cavity and refueling canal which are flooded only during plant shutdown for refueling, the transfer canal and the spent fuel pit which is kept full of water and the new fuel storage area which is separated and protected for dry storage. The refueling canal and spent fuel pit are connected by the fuel transfer tube and transfer canal. Fuel is carried through the tube on the underwater conveyor car. This tube is fitted with a blind flange on the reactor containment end and a gate valve on the transfer canal end. The blind flange is in place and the gate valve is normally closed when containment integrity and annulus secondary containment is required.

An upender at either end of the fuel transfer tube is used to pivot a fuel assembly. Before entering the fuel transfer tube the upender pivots the fuel container containing a fuel assembly to the horizontal position for passage through the transfer tube. After the transfer car transports the fuel assembly through the transfer tube, the upender at that end of the tube pivots the assembly to a vertical position so that it can be lifted out of the fuel container.

Fuel is normally moved between the reactor vessel and the refueling canal by the manipulator crane. A rod cluster control changing fixture located on the refueling canal wall can be used for transferring control elements from one fuel assembly to another. A portable rod cluster control changing tool is located in the spent fuel area and is normally used to transfer control rods.

In the reactor cavity, fuel is removed from the reactor vessel, transferred through the water and placed in the fuel container in a vertical position by a manipulator crane. The fuel assembly is moved to the horizontal position by an upending fixture and is moved through the transfer tube on the conveyor car. In the transfer canal another upending frame moves the fuel assembly to a vertical position. The fuel assembly is removed from the fuel container and placed into the spent fuel storage racks by a long-handled manual tool suspended from the spent fuel pit bridge hoist. In the spent fuel pit, decay heat is removed by the spent fuel pit cooling system. After a sufficient decay period, the fuel may be removed from the racks and loaded into a shipping cask for removal from the site or the spent fuel assemblies may be placed in interim storage at SQN Independent Spent Fuel Storage Installation (ISFSI) (Section 9.1.5).

9.1.4.2.1 Refueling Description

The refueling operation follows a detailed procedure which provides a safe, efficient refueling operation. The following significant points are assured by the refueling operation:

1. The refueling water and the reactor coolant are maintained at least at a boron concentration which is the more restrictive of 2000 ppm or the concentration calculated to maintain the core subcritical by at least 5 percent $\Delta k/k$ during refueling operations.

2. The water level in the refueling cavity is high enough to keep the radiation levels within acceptable limits when the fuel assemblies are being removed from the core. This water also provides adequate cooling for the fuel assemblies during transfer operations.

The refueling operation is divided into five major phases: (1) preparation, (2) reactor disassembly, (3) fuel handling, (4) reactor assembly, and (5) dry cask storage operation as discussed in FSAR Section 9.1.5.3. A general description of a typical refueling operation through the five phases is given below:

1. Phase I - Preparation

   The reactor is shutdown and cooled to cold shutdown conditions with a final $k_{eff} \leq 0.95$ (all rods in). Following a radiation survey, the containment vessel is entered.

2. Phase II - Reactor Disassembly

   All missile shields, cables, air ducts, insulation, piping, and studs are removed or disconnected as required to allow removal of the reactor head assembly. The refueling canal is prepared for flooding by closing the refueling canal drain holes; removing the blind flange from the fuel transfer tube; checking the underwater lights, tools, and fuel transfer system; and sealing off the reactor cavity. With the refueling canal prepared for flooding, the vessel head is unseated and taken to its storage pedestal. Water from the refueling water storage tank is pumped into the reactor coolant system by the residual heat removal pumps, filling the vessel and eventually the refueling cavity to a safe shielding depth. Additional water from the CVCS Holdup Tanks (HUT) can be processed and pumped to the refueling canal by the Gas Stripper Feed Pumps or the HUT Recirculation Pumps. The control rod drive shafts are disconnected and the upper internals are removed from the vessel. The fuel assemblies and rod cluster control assemblies are now free from obstructions and the core is ready for refueling. Final checkout of the fuel transfer system and manipulator crane is completed. The gate valve in the fuel transfer tube is opened when needed to connect the refuel cavity and fuel transfer canal.

3. Phase III - Fuel Handling

   A complete core offload is normally performed with core component shuffle in the spent fuel pit. In-core fuel shuffles may also be performed.

   The general fuel handling sequence is:

   a. The manipulator crane removes a spent or partially spent fuel assembly from the core and places it in the fuel assembly container of the transfer car.

   b. The upender pivots the fuel assembly container to the horizontal position.

   c. The transfer car moves the fuel assembly to the transfer canal in the auxiliary building.

   d. The upender pivots the fuel assembly container to the vertical position.

   e. The spent fuel pit bridge hoist removes the fuel assembly from the fuel assembly container and places it in the spent fuel rack.

f. Spent or partially spent fuel assemblies are transferred as above until all necessary assemblies have been moved from the reactor core to the spent fuel racks.

g. Core components (RCCAs, thimble plugs, etc.) are transferred as necessary to ready the partially spent and new fuel assemblies for core reload.

h. Reload of partially spent and new fuel assemblies back into the reactor is essentially the reverse of (a) through (f) above.

i. Partially spent fuel assemblies may also be moved directly to new core positions as required for the next operating cycle.

j. Spent, partially spent, and new fuel assemblies may also be placed in the RCC changing fixture for transfer of core components (RCCAs and thimble plugs) or the transfer may occur in the upender or spent fuel pool using portable component handling tools.

k. New fuel assemblies are transferred directly from the new fuel elevator to the upender fuel assembly container or go into the spent fuel pool using the spent fuel bridge.

l. Fuel assemblies or components may also undergo inspections in the spent fuel area to determine integrity.

4. Phase IV - Reactor Assembly

Reactor assembly, following refueling, is essentially achieved by reversing the operations given in Phase II - Reactor Disassembly.

5. Phase V - Dry Cask Storage Operations

Dry cask storage operations are provided in SQN Independent Spent Fuel Storage Installation (ISFSI) (Section 9.1.5.3).

9.1.4.2.2 Component Description

Manipulator Crane

The manipulator crane (Figure 9.1.4-3) is a rectilinear bridge and trolley crane with a vertical mast extending down into the refueling water. The bridge spans the refueling cavity and runs on rails set into the edge of the refueling cavity. The bridge and trolley motions are used to position the vertical mast over a fuel assembly in the core. A long tube with a pneumatic gripper on the end is lowered down out of the mast to grip the fuel assembly. The gripper tube is long enough so that the upper end is still contained in the mast when the gripper end contacts the fuel. A winch mounted on the trolley raises the gripper tube and fuel assembly up into the mast tube. The fuel is transported while inside the mast tube to its new position.

All controls for the manipulator crane are mounted on a console on the trolley. The bridge and trolley position indication is provided to the operator. The drives for the bridge, trolley, and winch are variable speed and include a separate inching control on the winch. Electrical interlocks and limit switches on the bridge and trolley drives limit the movement to prevent damage to the fuel assemblies. The winch is also provided with limit switches plus a mechanical stop to prevent a fuel assembly from being raised above a safe shielding depth should the limit switch fail. In special circumstances, the bridge, trolley, and winch can be operated manually using a handwheel on the motor shaft.

Spent Fuel Pit Bridge

The spent fuel pit bridge (Figure 9.1.4-4) is a wheel-mounted walkway, spanning the shared spent fuel pit. The bridge carries an electric monorail hoist on an overhead structure. The fuel assemblies are moved within the spent fuel pit by means of a long-handled tool suspended from the hoist. The hoist travel and tool length are designed to limit the maximum lift of a fuel assembly's active fuel region to a safe shielding depth, Section 9.1.4.3.4.

New Fuel Elevator

The new fuel elevator consists of a box-shaped elevator assembly with its top end open. It is sized to contain one fuel assembly.

The new fuel elevator is used to lower a new fuel assembly to the bottom of the fuel transfer canal where it is transported by the spent fuel pit bridge hoist. The new fuel elevator is not intended to be used to raise irradiated fuels. The new fuel elevator may be used for fuel reconstitution with appropriate safeguards in place.

Fuel Transfer System

The fuel transfer system (Figure 9.1.4-1) includes an electric driven transfer car that runs on tracks extending from the upending frame in the refueling canal through the transfer tube to the upending frame in the transfer canal. The upender in the refueling canal receives a fuel assembly in the vertical position from the manipulator crane. The fuel assembly is lowered to a horizontal position for passage through the transfer tube and is then raised to a vertical position by the upender in the fuel transfer canal. The spent fuel pit bridge moves the fuel assembly to the spent fuel storage racks.

During reactor operation, the transfer car is stored in the fuel transfer canal. A blind flange is bolted to the refueling canal end of the transfer tube when reactor containment integrity is required. The end of the tube outside the containment is normally closed by a gate valve when not in refueling operation.

Rod Cluster Control Changing Fixture

RCC elements may be transferred from one fuel assembly to another by means of the RCC changing fixture (Figure 9.1.4-5). Five major subassemblies comprise the changing fixture including: (1) frame track structure, (2) carriage, (3) guide tube, (4) gripper, and (5) drive mechanism. The carriage is a movable container supported by the frame and track structure. The tracks provide a guide for the four flanged carriage wheels and allow horizontal movement of the carriage during changing operations. Positioning stops on both the carriage and frame locate each of the three carriage compartments directly below the guide tube. Two of these compartments are designed to hold individual fuel assemblies while the third is made to support a single RCC element. Situated above the carriage and mounted on the refueling canal wall is the guide tube. This assembly provides for the guidance and proper orientation of the gripper and RCC element as they are being raised or lowered. The gripper is a pneumatically actuated mechanism responsible for engaging the RCC element. It has two flexure fingers which can be inserted into the top of the RCC element when air pressure is applied to the gripper piston. Normally the fingers are locked in a radially extended position. Mounted on the operating deck is the drive mechanism assembly. Its components include: (1) a manual carriage drive mechanism, (2) a revolving stop operating handle, (3) a pneumatic selector valve for actuating the gripper piston, and (4) an electric hoist for elevation control of the gripper.

Portable Rod Cluster Control Changing Tool

A portable RCC changing tool that functions in a manner similar to the stationary RCC change fixture is normally used. The tool is lowered onto a fuel assembly in the spent fuel racks. The gripper is then inserted into the RCC hub and actuated to engage. The gripper and RCC element are then withdrawn from the fuel assembly and into a guide structure in the lower portion of the tool. Once the RCC element is fully withdrawn from the fuel, the tool is raised to permit movement to another fuel assembly. Lowering of the tool into the top nozzle of the fuel assembly allows the RCC element to be inserted into the fuel and allows the gripper mechanism to be disengaged.

Spent Fuel Handling Tool

This tool is used to handle new and spent fuel in the spent fuel pit. It is a manually actuated tool on the end of a long pole suspended from the spent fuel pit hoist. An operator on the spent fuel pit bridge guides and operates the tool.

Thimble Plug Handling Tool

This tool is used to transfer thimble plugging devices between fuel assemblies. It is a manually actuated tool on the end of a long pole, suspended from either the spent fuel pit hoist or manipulator crane auxiliary hoist.

Burnable Poison Handling Tool

This tool is used to transfer burnable poison rods between fuel assemblies. It is a manually actuated tool on the end of a long pole suspended from the spent fuel pit hoist.

New Fuel Assembly Handling Fixture

This short-handled tool is used to handle new fuel on the operating deck of the fuel storage building, to remove the new fuel from the shipping container, and to facilitate inspection and storage of the new fuel and loading of fuel into the new fuel elevator.

Temporary Tooling

Occasionally temporary tooling such as aluminum conduit poles with attachments are used to retrieve objects, provide lighting, perform visual examinations, etc. Such tooling is used for auxiliary purposes not associated with fuel movement.

Reactor Vessel Head Lifting Device

The reactor vessel head lifting device (Figure 9.1.4-6) consists of a welded and bolted structural steel frame with suitable rigging to enable the crane operator to lift the head and store it during refueling operations. The lifting device is permanently attached to the reactor vessel head. Attached to the head lifting device are the monorail and hoists for the reactor vessel stud tensioners.

Reactor Internals Lifting Device

The reactor internals lifting device (Figure 9.1.4-7) is a structural frame suspended from the overhead polar crane. The frame is lowered onto the guide tube support plate of the internals, and is manually bolted to the support plate by three bolts. Bushings on the frame engage guide studs in the vessel flange to provide guidance during removal and replacement of the internals package.

Reactor Vessel Stud Tensioner

Stud tensioners (Figure 9.1.4-8) are employed to secure the head closure joint at every refueling. The stud tensioner is a hydraulically operated device that uses oil as the working fluid. The device permits preloading and unloading of the reactor vessel closure studs at cold shutdown conditions. Stud tensioners minimize the time required for the tensioning or unloading operations. The studs are tensioned to their operational load in sequential steps to prevent high stresses in the flange region and unequal loadings in the studs.

9.1.4.3 Design Evaluation

9.1.4.3.1 Safe Handling

The manipulator crane design includes the following provisions to ensure safe handling of fuel assemblies:

1. Bridge, trolley, and winch drives are mutually interlocked, using redundant interlocks, to prevent simultaneous operation of any two drives.

2. Bridge and trolley drive operation is prevented except when both gripper tube up position switches are actuated.

3. An interlock is supplied which prevents the opening of a solenoid valve in the air line to the gripper except when zero suspended weight is indicated by a force gage. As backup protection for this interlock, the mechanical weight actuated lock in the gripper prevents operation of the gripper under load even if air pressure is applied to the operating cylinder.

4. Two redundant excessive suspended weight switches open the hoist drive circuit in the up direction when the loading is in excess of 110 percent of a fuel assembly weight.

5. An interlock of the hoist drive circuit in the up direction permits the hoist to be operated only when either the open or closed indicating switch on the gripper is actuated.

   The hoist-gripper position interlock consists of two separate circuits that work in parallel such that one circuit must be closed for the hoist to operate. If one or both interlock circuits fail in the closed position an audible and visual alarm on the console is actuated.

6. An interlock of the bridge and trolley drives prevents the bridge drive from traveling beyond the edge of the core unless the trolley is aligned with the refueling canal centerline. The trolley drive is locked out when the bridge is beyond the edge of the core.

7. Suitable restraints are provided between the bridge and trolley structures and their respective rails to prevent derailing due to the safe shutdown earthquake. The manipulator crane bridge and trolley are restrained on the rails; horizontally by two pairs of guide rollers at each wheel on one track only. The rollers are attached to the bridge track at the wheels and contact the vertical face of the rail to prevent horizontal movement; and vertically by anti-rotation bars, in the vicinity of each wheel at all four wheel locations. The anti-rotation bars are 1 1/2 inch thick carbon steel bars bolted to the track and extending under the rail flange, to prevent lifting of any wheel from the rail. The manipulator crane is designed to prevent disengagement of a fuel assembly from the gripper under the safe shutdown earthquake.

8. The main and auxiliary hoists are equipped with two independent braking systems. A solenoid released spring set electric brake is mounted on the motor shaft. This brake operates in the normal manner to release upon application of current to the motor and set when current is interrupted. The second brake is a mechanically actuated load brake which is internal to the hoist

gear box that sets if the load starts to overhaul the hoist. It is necessary to apply torque from the motor to raise or lower the load. In raising, the motor cams the brake open, in lowering, the motor slips the brake allowing the load to lower. This brake actuates upon loss of torque from the motor for any reason and is not dependent on any electrical circuits. On the main hoist the motor break is rated at 350 percent operating load and the mechanical brake at 300 percent.

The fuel hoist system is supplied with redundant paths of load support such that failure of any one component will not result in free fall of the fuel assembly. Two wire ropes are anchored to the winch drum and carried over independent sheaves to a load equalizing mechanism on the top of the gripper tube. In addition, supports for the sheaves and equalizing mechanism are backed up by passive restraints to pick up the load in the event of failure of this primary support. Each cable system is designed to support 13,750 pounds separately or 27,500 pounds acting together.

The working load of fuel assembly plus gripper is approximately 2500 pounds.

The gripper itself has four fingers gripping the fuel, any two of which will support the fuel assembly weight.

The gripper and hoist system are routinely load tested to $\geq$2750 pounds.

The following safety features are provided for the fuel transfer system control circuit:

1. Transfer car operation is possible only when both lifting arms are in the down position.

2. The remote control panels (one on the refueling canal side and one on the spent fuel pit side) have a transfer car control that prevents operation of the transfer car in either direction until the control function is enabled on both panels. This prevents the spent fuel pit side operator from moving the transfer car until the reactor side operator has completed fuel movement.

3. Transfer car operation is possible only when the transfer tube valve position switch indicates the valve is fully open.

4. The refueling canal lifting arm is interlocked with the manipulator crane. The lifting arm cannot be operated unless the manipulator crane gripper tube is in the fully retracted position or the crane is over the core.

5. All fuel handling tools and equipment handled over an open reactor vessel are designed to prevent inadvertent decoupling from crane hooks (i.e., lifting rigs are pinned to the crane hook and safety latches are provided on hooks that support tools).

6. Verification that the transfer car is at either end of its travel is required prior to operating the lifting arm.

Tools required for handling internal reactor components are designed with fail safe features that prevent disengagement of the component in the event of operating mechanism malfunction. These safety features apply to the control rod drive shaft unlatching tool. The air cylinders actuating the gripper mechanism are equipped with backup springs which close the gripper in the event of loss of air to the cylinder. Air valves are equipped with safety locking rings to prevent inadvertent actuation.

9.1.4.3.2 Seismic Considerations

The maximum design stress for the structures and for all parts involved in gripping, supporting, or hoisting the fuel assemblies is 1/5 ultimate strength of the material. This requirement applies to normal working load and emergency pullout loads, when specified, but not to earthquake loading. To resist safe shutdown earthquake forces, the equipment is designed to limit the stress in the load bearing parts to 0.9 times the yield stress for a combination of normal working forces plus safe shutdown earthquake forces.

9.1.4.3.3. Containment Pressure Boundary Integrity

The fuel transfer tube which connects the reactor cavity / refueling canal (inside the reactor containment) and the fuel transfer canal (outside the containment) is closed on the refueling canal side by a blind flange when containment integrity is required. Two seals are located around the periphery of the blind flange with leak-check provisions between them.

9.1.4.3.4 Radiation Shielding

During transfer of a spent fuel assembly, the gamma dose rate from the assembly itself is calculated to be 2.5 mrem/hr or less at a distance of 3 feet above the surface of the water. This dose rate is based on maintaining an adequate water level for shielding above the fuel assembly during all handling operations.

The two cranes used to lift spent fuel assemblies are the manipulator crane and the spent fuel pit bridge hoist. The manipulator crane contains positive stops which prevent the top of a fuel assembly from being raised above the water level needed for shielding in the refueling cavity. The hoist on the spent fuel pit bridge moves spent fuel assemblies with a long-handled tool. Hoist travel and tool length limit the maximum lift of a fuel assembly in the spent fuel pit to maintain water coverage needed for shielding.

9.1.4.4 Tests and Inspections

As part of normal plant operations the fuel-handling equipment is inspected for operating conditions prior to each refueling and dry cask storage (Reference Section 9.1.5) operation.

During the operational testing of this equipment, procedures are followed that will affirm the correct performance of the fuel handling system interlocks.

9.1.4.5 Reference

1. "Alternate Testing of Reactor Vessel Head and Internals Lifting Rigs - Sequoyah Nuclear Plant, Units 1 and 2 (Tac Nos. 76425/76426)," dated October 1, 1991, (A02911007002) enclosure Safety Evaluation Report.

2. Sequoyah Nuclear Plant - Technical Specification (TS) Change 95-06, "Deletion of TS 3/4.9.7, Crane Travel - Spent Fuel Pit Area," Submittal (S64 950406 803).

3. Issuance of Amendment for the Sequoyah Nuclear Plant, Units 1 and 2 (TAC Nos. M91986 and M91987) (TS 95-06) dated June 14, 1995, (L44 950622 001) enclosure Safety Evaluation Report.

9.1.5 Independent Spent Fuel Storage Installation (ISFSI)

9.1.5.1 Regulatory Basis

Under 10 CFR 72.210, SQN is issued a general license for the storage of spent fuel in an Independent Spent Fuel Storage Installation (ISFSI). An ISFSI is a complex that is designed and constructed for the interim storage of spent nuclear fuel, high-level radioactive waste, solid reactor-related GTCC waste, and other radioactive materials associated with spent fuel and reactor-related GTCC waste storage. TVA selected the HI-STORM 100 Cask System and the HI-STORM FW System for use at the SQN ISFSI to maintain adequate on-site spent fuel storage capacity. Upon NRC approval of the Final Safety Analysis Report (FSAR) for the HI-STORM 100 Cask System, the NRC issued Certificate of Compliance (CoC) Docket No. 72-1014 and Safety Evaluation Report (SER) Docket No. 72-1014 for use of the HI- STORM 100 Cask System. Likewise, upon NRC approval of the FSAR for the HI-STORM FW System, the NRC issued CoC Docket No. 72-1032 and SER Docket No. 72-1 032 for use of the HI-STORM FW System. As a General Licensee, SQN is authorized to use the HI- STORM 100 Cask System and the HI-STORM FW System in accordance with the appropriate documents for each dry cask storage system:

- NUREG-1536, Standard Review Plan for Dry Cask Storage Systems
- CoC 72-1014 (HI-STORM 100 Cask System), containing:
  - Appendix A: Technical Specifications
  - Appendix B: Approved Contents and Design Features
- CoC 72-1032 (HI-STORM FW System), containing:
  - Appendix A: Technical Specifications
  - Appendix B: Approved Contents and Design Features
- Holtec International FSAR for the HI-STORM 100 Cask System (HI-2002444)
- NRC Safety Evaluation Report: HI-STORM 100 Cask System
- Holtec International FSAR on the HI-STORM FW System (HI-21114830)
- NRC Safety Evaluation Report: HI-STORM FW System
- 10 CFR 72, as applicable per 10 CFR 72.13
- SQN 10 CFR 72.212 Evaluation Report for the HI-STORM 100 Cask System
- SQN 10 CFR 72.212 Evaluation Report for the HI-STORM FW System

9.1.5.2 System Description

The HI-STORM 100 Cask System used at SQN is comprised of a stainless steel multipurpose canister (MPC-32), a transfer cask (HI-TRAC 125D), and a HI-STORM 100 Cask System metal/concrete overpack. The MPC-32 fuel basket provides criticality control and can hold 32 PWR spent fuel assemblies or radioactive materials associated with spent fuel and reactor-related waste components. The outer shell, top lid, bottom baseplate, closure ring, and associated welds constitute the MPC-32 confinement boundary which precludes radioisotopes leakage into the environment, provides the heat transfer medium from the contents to the environment, and provides an inert environment to prevent corrosion of the stored fuel. The HI-TRAC 125D transfer cask holds the MPC-32 during spent fuel loading, processing, and unloading operations and provides ALARA for personnel in accordance with 10 CFR 20. The HI-TRAC 1250 is used to transfer the MPC-32 to and from the cask pit pool and the HI-STORM 100 Cask System overpack in accordance with 10 CFR 72 for onsite storage or to an off-site shipment cask licensed under 10 CFR 71. The MPC-32 is stored inside the HI-STORM 100 Cask System overpack for protection against extreme natural phenomena, tornado generated missiles, radiological shielding, and allows for the transfer of heat from the stored fuel to the environs.

The HI-STORM FW System which is also used at SQN is comprised of a stainless steel multi-purpose canister (MPC-37), a transfer cask (HI-TRAC VW), and a HI-STORM FW System metal/concrete overpack. The MPC-37 fuel basket provides criticality control and can hold 37 PWR spent fuel assemblies or radioactive materials associated with spent fuel and reactor-related waste components. The outer shell, top lid, bottom baseplate, closure ring, and associated welds constitute the MPC-37 confinement boundary which precludes radioisotopes leakage into the environment, provides the heat transfer medium from the contents to the environment, and provides an inert environment to prevent corrosion of the stored fuel. The HI-TRAC VW transfer cask holds the MPC-37 during spent fuel loading, processing, and unloading operations and provides ALARA for personnel in accordance with 10 CFR 20. The HI-TRAC VW is used to transfer the MPC-37 to and from the cask pit pool and the HI-STORM FW System overpack in accordance with 10 CFR 72 for onsite storage. The MPC-37 is stored inside the HI-STORM FW System overpack for protection against extreme natural phenomena, tornado generated missiles, radiological shielding, and allows for the transfer of heat from the stored fuel to the environs.

The MPCs (32/37), the transfer casks (HI-TRAC 125D / HI-TRAC VW). and the overpacks (HI-STORM 100 Cask System / HI-STORM FW System) are not interchangeable components between the dry cask storage systems. The HI-STORM 100 Cask System components (HI-TRAC 1250, MPC-32, and HI-STORM 100 Cask System overpack) are used together and the HI-STORM FW System components (HI-TRAC VW, MPC-37, and HI-STORM FW System overpack) are used together.

The SQN ISFSI is located within the existing protected 10 CFR 50 property. southeast of the Unit 2 reactor building. The ISFSI storage pad (see Figure 2.1.2-1) consists of eight (8) sections, which is sufficient to store 90 overpacks (either HI-STORM 100 Cask System or HI-STORM FW System overpacks). In addition to the storage pad, the ISFSI is surrounded by protected fencing and monitored by various security systems.

As stated, the shipping cask (i.e., MPC-32) is designed in accordance with the requirements of 10 CFR 71 and 10 CFR 72. A cask drop could lead to potential fuel damage. An analysis (Reference Calculation SQS2-0226) was performed for a cask drop accident containing 32 assemblies, each assembly having a minimum of 3 years decay since removal from the reactor. The analysis assumed all assemblies were ruptured. Such an accident is bounded by a Fuel Handling Accident (a single assembly accident with only 100 hours decay, see UFSAR section 15.4.5). Table 9.1.5-1 compares the gap activities of a single assembly with 100 hours decay to that of 32 assemblies with 3 years decay.

The HI-TRAC VW transfer cask and the HI-STORM FW overpack, which contain an MPC-37 will be moved with lifting equipment that shall have redundant drop protection features, which prevent uncontrolled lowering of the load. All lifting appurtenances used with the HI-TRAC VW transfer cask and HI-STORM FW overpack are designed in accordance with NUREG-0612 and ANSI N14.6, as

applicable. Also, each lift of an MPC, a HI-TRAC VW transfer cask, or any HI-STORM FW overpack will be made in accordance to the SQN heavy loads requirements and procedures. ·The use of an equivalent single-failure-proof crane for dry cask lifts in the Auxiliary Building assures a drop of an MPC-37 will not occur due to a single failure of the lifting system. Therefore, a cask drop of an MPC-37 that could lead to potential fuel damage is not postulated. Although this is not a credible event in the Holtec FSAR, Reference calculation SQS20226 concluded that the dose consequence of an MPC-32 and -37 cask drop is bounded by a Fuel Handling Accident involving a single assembly as described in UFSAR section 15.5.6.

A detailed description of the HI-STORM 100 Cask System is provided in Holtec International FSAR for the HI-STORM 100 Cask System (HI-2002444). Whereas, a detailed description of the HI-STORM FW System is provided in Holtec International FSAR for the HI-STORM FW System (HI-2114830).

9.1.5.3 Dry Cask Storage Operations

a. The transfer cask and multi-purpose canister (MPC) are placed in a cask work area (CWA) on the auxiliary building refueling floor by the auxiliary building overhead crane with a lift yoke attached to the crane hook using site established safe load path.

b. Activities associated with the preparation of the transfer cask such as inspections, partial filling of neutron shield water jacket with demineralized water, placing the MPC into the transfer cask, partial filling of the MPC with borated water, installation of the annulus over pressure system, installation of the inflatable annulus shield, etc. will be performed in the CWA.

c. After the transfer cask preparations are completed, the transfer cask and MPC are moved from the CWA to the cask stand in the shallow end of the cask loading area.

d. To prevent submerging the main hoist crane hook in the deep end of the cask loading area, a lift yoke extension will be installed between the crane hook and the lift yoke.

e. With these lifting devices in place, the transfer cask and MPC are moved from the shallow end cask stand to the deep end cask stand. The cask support stand in the deep end of the cask loading area is ergonomically sized such that the top of the MPC is positioned approximately level with the top of the spent fuel pool fuel racks.

f. Under water cameras and surveillance will be used as needed to ensure placement of the transfer cask, verify lift yoke is engaged or disengaged, verify MPC lid placement, monitor fuel loading, etc.

g. The gate between the cask loading area and spent fuel pit is not to be installed.

h. Using the spent fuel pit bridge and manipulator crane, spent fuel assemblies are transferred from the spent fuel storage racks to the MPC wherein 10 CFR 72 regulation is in effect. After the spent fuel assemblies are loaded, the MPC lid is placed on the MPC. Radiation monitoring may be performed prior to transfer cask and MPC breaching the pool surface.

i. Following verification of MPC lid placement and after dose rate measurements has determined that it is safe to continue, the transfer cask and loaded MPC are placed back on the shallow end cask stand where radiation monitoring, connection of pump down hoses, removal of the lift yoke extension, etc. takes place. Note that the 10 CFR Part 50 Technical Specification (TS) (Reference TS 3.7.13) requirement of maintaining 23 feet of water shielding no longer applies.

j. After radiation dose rate measurements confirm that it is safe to remove the transfer cask from the cask loading area, the transfer cask and loaded MPC are placed back in the CWA where the next phase of decontamination of the transfer cask, disengagement of the annulus overpressure system, and MPC closure operation are performed.

k. After the MPC lid is seal welded, the MPC is hydrostatically tested, drained, dried and filled with helium.

l. The transfer cask and MPC are moved to the auxiliary building railroad bay where the MPC is transferred to the HI-STORM overpack.

m. The HI-STORM overpack is transported to the ISFSI and placed at a designated location.

n. If necessary, unloading operations are performed using similar methodology in reverse.

9.1.5.4 Evaluation of the Reactor Power & ISFSI Facilities Interface Documents

Analyses used to demonstrate ISFSI compliance to 10 CFR 50 and 10 CFR 72 regulations are listed in Table 9.1.5-2. These analyses address SSCs that are shared or utilized to facilitate SQN 10 CFR 50 Reactor Power and 10 CFR 72 ISFSI facilities. This section is not intended to be all inclusive of design features between the two facilities however, this listing provides examples of SSCs having design basis requirements in both the 10 CFR 50 and 10 CFR 72 regulations. The applicability of these regulations also includes the associated drawings and procedures of the commonly shared SSCs. Therefore, implementing a change, test, or experiment for these shared SSCs shall require a 10 CFR 50.59 review and a 10 CFR 72.48 review. This position demonstrates compliance with 10 CFR 50 Appendix A, GDC-5 and 10 CFR 72.122 Paragraphs (d), (e), and (k) (4).

TABLE 9.1.3-1 (Sheet 1)

SPENT FUEL PIT COOLING SYSTEM STORAGE CASES

Spent fuel pit storage capacity	2,091
Nominal boron concentration of the spent fuel pit water, ppm	2,000

Discharge Scenarios

Case 1: Normal Full Core Discharge

The entire core (193 fuel assemblies) from one reactor unit is transferred to the pool after twelve days of decay in the reactor. The total fuel transfer time is assumed to be 36 hours for 193 bundles. 113 assemblies of the core are reloaded into the reactor 30 days after completion of download to the pool. The total reload time is assumed to be 21.1 hours. The total duration of the outage is assumed to be 60 days.

Two discrete analyses have been performed for Case 1 assuming two cooling trains in operation and one cooling train in operation. These two evaluations and denoted as Case 1a and Case 1b, respectively.

Case 2: Back-to-Back Normal Full Core Discharge

Eighteen days after the end of the outage described in Case 1, the other unit has a scheduled outage. Transfer time parameters and the number of fuel assemblies moved are the same as in Case 1.

Two discrete analyses have also been performed for Case 2 assuming two cooling trains in operation and one cooling train in operation. These two evaluations are denoted as Case 2a and Case 2b, respectively.

Case 3: Unplanned Full Core Offload

Sixty days after the end of the back-to-back normal refueling outage (Case 2 above), the first unit has an unplanned shutdown. The full core transfer to the pool begins 12 days after the shutdown and is completed in 36 hours. All fuel assemblies in the discharged core are conservatively assumed to have 1260 full power days of operation.

Parameters

Coolant Inlet Temp. °F	95
Coolant Flow Rate/Cooler, gallons per minute	3000
Fuel Pool Water Flow Rate/Cooler, gallon per minute	2300

SQN
Table 9.1.3-1 (Sheet 2)

SPENT FUEL PIT COOLING SYSTEM STORAGE PARAMETERS
[1] BASIS: 12 RACKS, 2091 STORAGE CELLS INSTALLED, 1773 FUEL ASSEMBLIES

CASE NO.	NUMBER OF COOLING TRAINS OPERATING	DISCHARGE ID	NO. OF ASSEMBLIES	TIME AFTER SHUTDOWN WHEN TRANSFER BEGINS, hrs	FUEL TRANSFER TIME, hrs	FUEL EXPOSURE TIME, hrs	MAX MAX. POOL BULK TEMP °F	COINCIDENT COOLER DUTY 10^6BTU/hr	TIME COINCIDENT TO TMAX,hrs (after reactor shutdown)	COINCIDENT EVAPORATION HEAT LOSS 10^6BTU/hr	[2] TIME TO BOIL (hours)	[3] t*(hrs)
1a	TWO	OFFLOAD	193	288	36	30240	138	39.3	332	0.378	5.5	36
		RELOAD	113	1044	21.1							
1b	ONE	OFFLOAD	193	288	36	30240	175	36.5	336	3.06	3.42	34
		RELOAD	113	1044	21.1							
2a	TWO	OFFLOAD	193	288	36	30240	143	43.5	332	0.521	4.71	33
		RELOAD	113	1044	21.1							
2b	ONE	OFFLOAD	193	288	36	30240	182	39.6	334	4.38	2.71	31
		RELOAD	113	1044	21.1							
3	TWO	OFFLOAD	193	288	36	30240	147	47.2	331	0.674	4.12	30

NOTES: [1] Design basis is based on 13 racks installed.
[2] Time coordinate starts from the instant of loss-of-cooling; no makeup water
[3] t* is the time elapsed subsequent to the loss-of-cooling when the pool water level drops to within 10' of the top of the active fuel stored in the fuel racks.
No makeup water is assumed
Reference Calculation: SQN-078-D054, EPM-YW-052291

TABLE 9.1.3-2 (Sheet 1)

SPENT FUEL PIT COOLING SYSTEM DESIGN AND OPERATING PARAMETERS

Spent Fuel Pit Pump		
Number	3	
Design pressure, psig	150	
Design temperature, °F	200	
Design flow, gpm	2300	
Total developed head, ft	125	
Material	Stainless Steel	
Spent Fuel Pit Skimmer Pump		
Number	1	
Design pressure, psig	50	
Design temperature, °F	200	
Design flow, gpm	100	
Total developed head, ft	50	
Material	Stainless Steel	
Refueling Water Purification Pump		
Number	2	
Design pressure, psig	150	
Design temperature, °F	200	
Design flow, gpm	200	
Total developed head, ft	170	
Material	Stainless Steel	
Spent Fuel Pit Heat Exchanger		
Number	2	
Design heat transfer, Btu/hr	11.94×10^6	
	Shell	Tube
Design pressure, psig	150	150
Design temperature, °F	200	200
Design flow, lb/hr	1.49×10^6	1.14×10^6
Inlet temperature, °F	95	120
Outlet temperature, °F	103	109.5
Fluid circulate	Component Cooling Water	Spent Fuel Pit Water
Material	Carbon Steel	Stainless Steel
Spent Fuel Pit Demineralizer		
Number	1	
Design pressure, psig	200	
Design temperature, °F	250	
Design flow, gpm	100*	
Resin volume, ft^3	30	
Material	Stainless Steel	

* Spent Fuel Pit Demineralizer flow may be increased to 180 gpm when aligned to the Refueling Water Purification Pumps

TABLE 9.1.3-2 (Sheet 2)
(Continued)
SPENT FUEL PIT COOLING SYSTEM DESIGN AND OPERATING PARAMETERS

Spent Fuel Pit Filter	
Number	1
Design pressure, psig	200
Design temperature, °F	250
Design flow, gpm	150
Filtration requirement	98% retention of particles above 5 microns
Material, vessel	Stainless Steel
Spent Fuel Pit Skimmer Filter	
Number	1
Design pressure, psig	200
Design temperature, °F	250
Rated flow, gpm	150
Filtration requirement	98% retention of particles above 5 microns
Material, vessel	Stainless Steel
Refueling Water Purification Filter	
Number	2
Design pressure, psig	200
Design temperature, °F	250
Design flow, gpm	200
Filtration requirement	98% retention of particles above 5 microns
Material, vessel	Stainless Steel
Spent Fuel Pit Strainer	
Number	2
Rated flow, gpm	2300
Perforation, inches	Approximately 0.2
Material	Stainless Steel
Spent Fuel Pit Skimmer Strainer	
Number	1
Rate flow, gpm	100
Design pressure, psig	50
Design temperature, °F	200
Perforation, inches	1/8
Material	Stainless Steel
Spent Fuel Pit Skimmers	
Number	2
Design flow, gpm	50
Piping and Valves	
Design pressure, psig	150
Design temperature, °F	200
Material	Stainless Steel

TABLE 9.1.3-4

SFP Cooling and Cleanup System Thermal Design Parameters Summary

	Maximum Decay Heat in SFP MBtu / Hr	Maximum SFP Temperature (2-Trains) °F	Maximum SFP Temperature (1-Train) °F	SFP Heat-Up Rate °F / Hr	Boil-Off Time to 10' Above Racks With No Makeup Hrs
Normal Fuel Core Discharge Case - 2093 + 193 assemblies	41.02	139	177	10.51	36
Unplanned Discharge Case 2173 + 193 Assemblies	45.37	144	183	10.98	32
Maximum Allowed Decay Heat at Sub-Design SFP HX Fouling and CCS Temperatures	55	144	183	25.35	25.7
Original design parameters were based on 13 SFP storage racks.					

TABLE 9.1.5-1

RADIOACTIVITY RELEASE (CURIES) IN A CASK DROP ACCIDENT COMPARED TO RELEASE IN A FUEL HANDLING ACCIDENT

Isotope	100-hr decay Assembly** Gap Activities	3-year decay 32 Assemblies (1 Cask) Gap Activities
KRM 83	5.605E-12	0.0
KRM 85	3.274E-02	0.0
KR 85	1.158E+04	4.273E+04
KR 87	7.228E-19	0.0
KR 88	8.253E-06	0.0
KR 89	0.000E+00	0.0
XEM 131	9.220E+03	1.793E-23
XEM 133	2.021E+04	0.0
XE 133	1.107E+06	9.417E-57
XEM 135	7.595E+00	0.0
XE 135	2.263E+03	0.0
XE 138	0.0	0.0
I 131	5.682E+05	2.766E-35
I 132	7.434E-08	0.0
I 133	5.876E+04	0.0
I 134	8.306E-29	0.0
I 135	4.410E+01	0.0
I* 131	1.424E+03	6.931E-38
I* 132	1.864E-10	0.0
I* 133	1.473E+02	0.0
I* 134	2.082E-31	0.0
I* 135	1.105E-01	0.0
H 3	0.0	0.0

* = organic species
** entire inventory in assembly. Gap fractions as found in NUREG/CR-5009

Reference: Table 9.1.5-2 (SQS2-0226)

TABLE 9.1.5-2

10 CFR PART 50 REACTOR POWER & 10 CFR PART 72 ISFSI FACILITIES INTERFACE DOCUMENTS

Mechanical/Nuclear Documents:

- SQS20013 - SQN -Spent Fuel Cooling and Cleaning Operating Modes
- SQS2-0171 - Dose Rate at the Site Boundary Due to Tanks, OSGSFs and ISFSI Pad in the Yard
- SQS2-0223 - MPC Closure Time to Boil & Thermal Analysis
- SQS2-0224 - 10 CFR 72.212 Reactor Site Parameters Evaluation
- SQS2-0225 - Post LOCA & Loss of Offsite Power Responses to Place a Loaded HI-TRAC Cask into a Safe Condition
- SQS2-0226 - Comparison of the Dose Consequences Between a Single Fuel Assembly FHA and a Dropped 32 Assembly Cask and a Dropped 37 Assembly Cask
- SQS2-0227 - SQN Spent Fuel Pool Boron Dilution Analysis During Dry Cask Storage Activities
- SQS2-0231 - Alternate Cooling Water System (ACWS) Equipment Sizing Calculation
- SQS2-0232 - SQN ISFSI and Haul Route Fire Hazards Analysis Calculation
- SQS2-0233 - SQN Aux Bldg El. 734 Refueling Floor Temperature Transient (LOCA) During Dry Cask Storage Operations
- SQS2-0234 - Offsite Dose Due to SQN ISFSI Accident and Off-Normal Releases
- SQS2-0235 - 40 and 60 Year Dose at the Independent Spent Fuel Storage Installation
- SQNNAL3-007 - Normal Operating Dose for Equipment Qualification Outside the Shield Building
- SQN-TI-534 - Annual Routine Radioactive Airborne Releases from the Operation of One Unit
- TIRPS181 - Basis for Determining an Acceptable Setpoint for the Spent Fuel Pool Radiation Monitor Setpoint
- TI-ECS-53 - Summary of Mild Environmental Conditions for Sequoyah Nuclear Plant

Civil Documents:

- SCG1S124 - Live Load Evaluation -Auxiliary Building Slab Elevation 734.0'
- SCG1S616 - 3D Seismic Acceleration of Time Histories & Stability of HI-STORM 100S at the Railroad Bay Slab Elevation
- SCG1S617 - Methodology for the ISFSI Pad/Cask Assemblage including SSI
- SCG1S618 - Structural Qualification of Sequoyah Nuclear Plant ISFSI Pad
- SCG1S619 - Documentation Relating to Report of Soils Testing for Independent Spent Fuel Storage Installation at Sequoyah
- SCG1S620 - Assessment of Utilities Beneath Dry Cask Transportation Haul Roadway
- SCG1S621 - Design Analyses for Work Platform and Cask Loading Stands
- SCG1S642 - Structural Evaluation of the Low Profile Transporter (LPT) for Sequoyah Nuclear Plant
- SCG1S643 - Structural Analysis of 125 Ton Transfer Cask Lift Yoke
- SCG1S645 - Spent Fuel Storage Vertical Cask Transporter
- SCG1S653 - Structural Analysis Details for Sequoyah Lift Yoke Extension
- SCG1S654 - HI-TRAC Lift Links
- SCG1S655 - HI-STORM 100S & HI-STORM FW Loaded Cask Weight for Sequoyah
- SCG1S659 - Accidental Drops of a Spent Fuel Assembly During the Course of MPC Loading Operation
- SCG1S661 - Postulated Accidental Vertical Drop of a Loaded HI-STORM 100S Version B Overpack on the ISFSI Haul Route Roadway
- 44N300C7 - 125 Ton Crane - Auxiliary Building
- 45YC002 - Concrete - Miscellaneous Yard Structures
- SCG-1-98 - Auxiliary Building 706.0 and 714.0 Floor Slabs
- 47W256C745 (RIMS No. MDB820722043) - Fuel Cask Decontamination

Electrical Documents:***

- 6527-03-07-E001 - Security Lighting Illumination Levels
- SQN-TJ201-0043 - Justification for the Addition of Lights Around the Spent Fuel Dry Cask Storage Area
- SQNETAPAC - SQN Auxiliary Power System

* All of the Mechanical/Nuclear Documents were revised to include or consider the HI-STORM FW System except for TI-ECS-53.

** All of the Civil Documents were revised to include or consider the HI-STORM FW System except for SCG1S619, SCG1S643, SCG1S654, and 47W256C745.

*** None of the Electrical Documents were reviewed to include or consider the HI-STORM FW System.

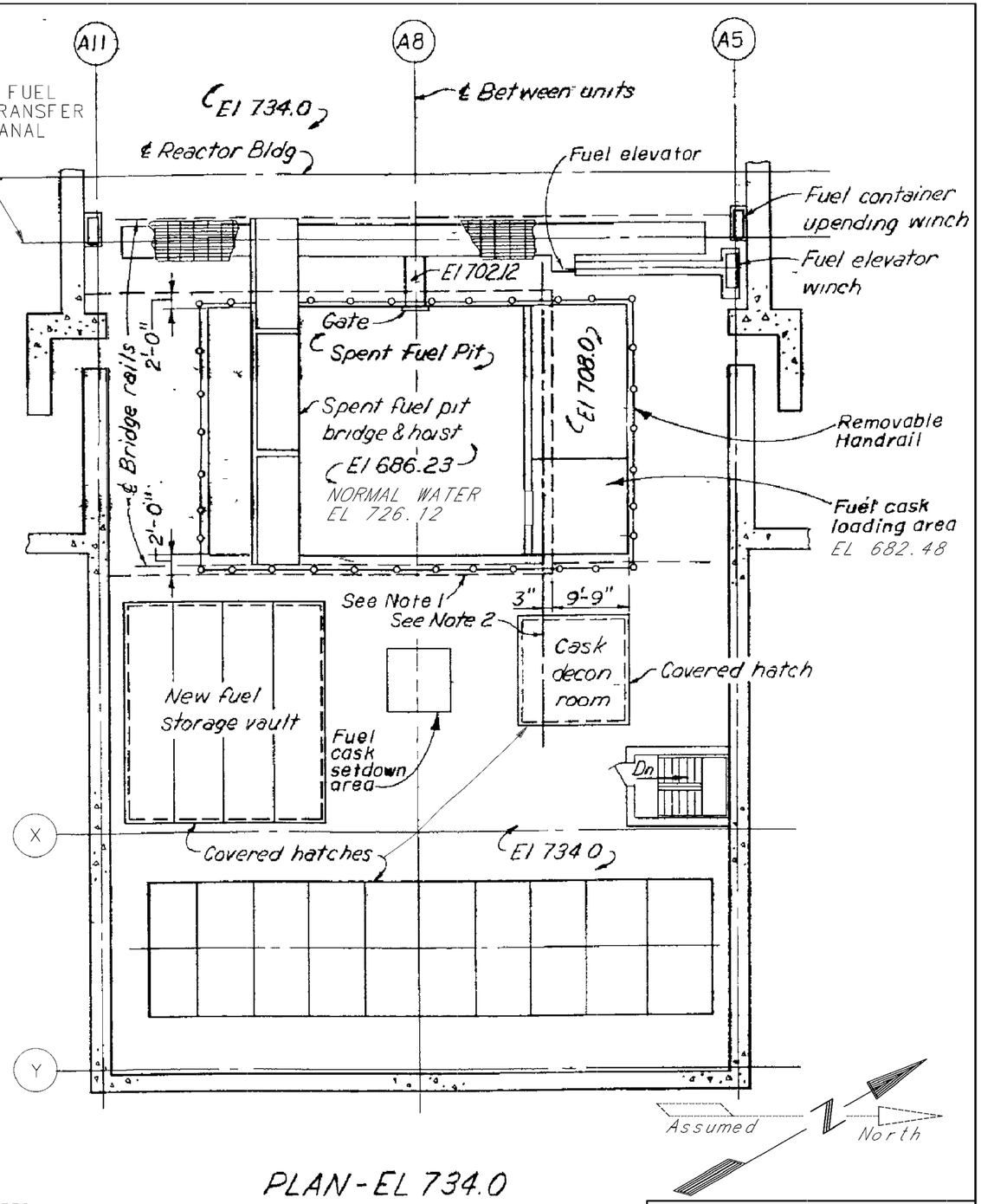

PLAN - EL 734.0

NOTES:

1. THE DOTTED LINE INDICATES THE APPROXIMATE REGION IN WHICH AUX BLDG CRANE IS PROHIBITED BY ELECTRICAL INTERLOCKS.
2. MOVEMENT OF MAIN HOOK SOUTH OF THIS LINE IS PROHIBITED BY MECHANICAL STOP. WHEN HEAVY LOADS ARE BEING HANDLED THE STOP IS APPLIED ADMINISTRATIVELY.

SEQUOYAH NUCLEAR PLANT
FINAL SAFETY
ANALYSIS REPORT

FIGURE 9.1.1-1
FUEL STORAGE & HANDLING

(REVISED BY AMENDMENT 13)

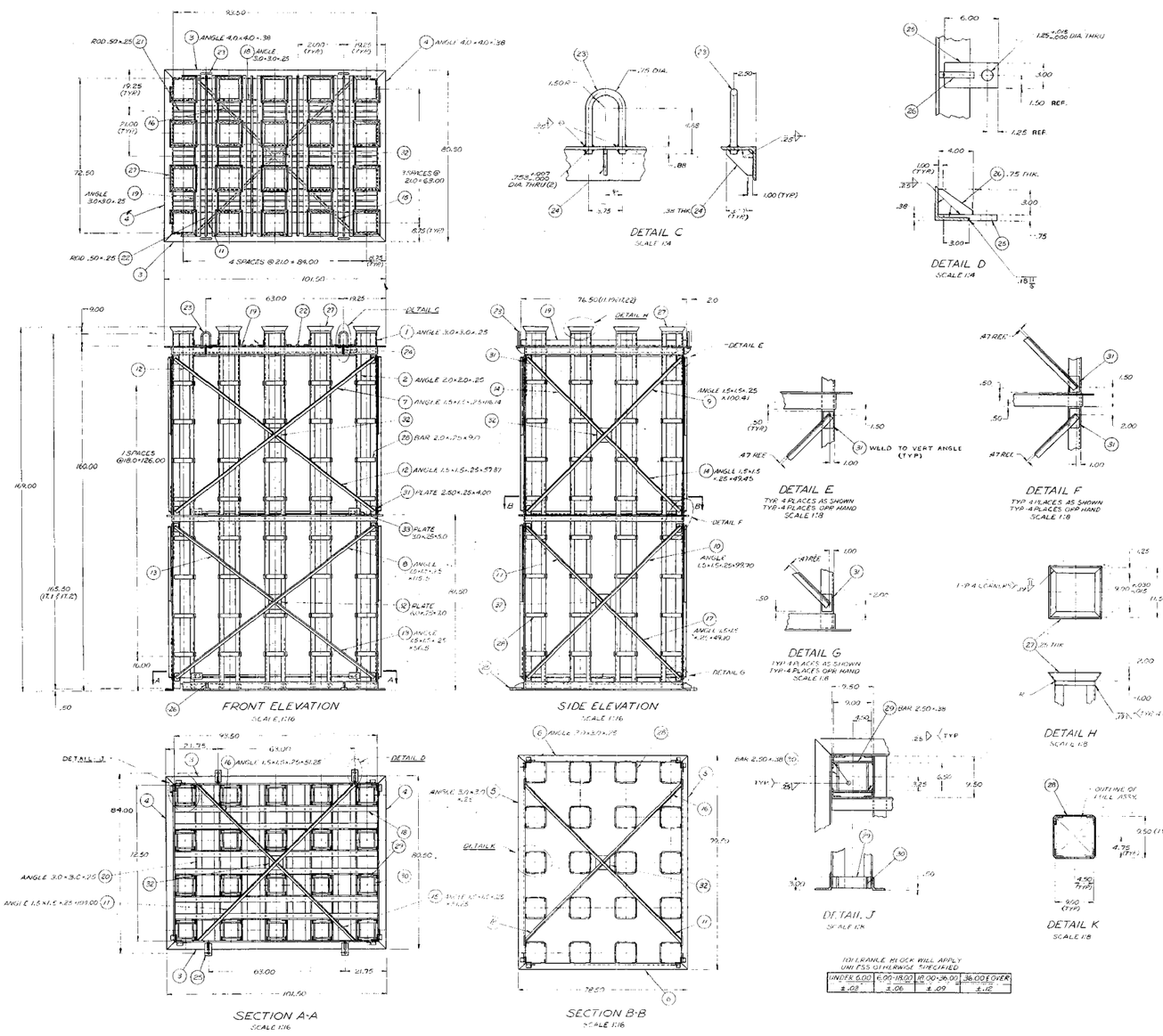

(10) ANGLE MITER WILL APPLY UNLESS OTHERWISE SPECIFIED

UNDER 6.00	6.00-18.00	18.00-36.00	36.00 & OVER
±.03	±.06	±.09	±.12

BILL OF MATERIAL

ITEM	TITLE	DRAWING & CB. OR IT.	MATERIAL SPECIFICATION	PROPERTY MIN. REQ'D FOR MAT'L OR PROD. FORM	NO. REQ.			
1	LEG		SEE NOTE M		4			
2	LEG		SEE NOTE M		76			
3	FRAME		SEE NOTE M		4			
4	FRAME		SEE NOTE M		4			
5	FRAME		SEE NOTE M		2			
6	FRAME		SEE NOTE M		2			
7	BRACE		SEE NOTE M		2			
8	BRACE		SEE NOTE M		2			
9	BRACE		SEE NOTE M		2			
10	BRACE		SEE NOTE M		2			
11	BRACE		SEE NOTE M		3			
12	BRACE		SEE NOTE M		4			
13	BRACE		SEE NOTE M		4			
14	BRACE		SEE NOTE M		4			
15	BRACE		SEE NOTE M		3			
16	BRACE		SEE NOTE M		3			
17	BRACE		SEE NOTE M		3			
18	GRID		SEE NOTE M		12			
19	GRID		SEE NOTE M		12			
20	LAYER		SEE NOTE M		18			
21	STRAP		SEE NOTE M		4			
22	STRAP		SEE NOTE M		4			
23	LIFTING LUG		SEE NOTE M		4			
24	RIB		SEE NOTE M		4			
25	ANCHOR PLATE		SEE NOTE M		4			
26	RIB		SEE NOTE M		4			
27	FLANGE		SEE NOTE M		12			
28	SUPPORT BAR		SEE NOTE T		12			
29	STOP BAR		SEE NOTE T		12			
30	STOP BAR		SEE NOTE T		12			
31	FILLER PLATE		SEE NOTE		12			
32	GUSSET		SEE NOTE		11			
33	GUSSET		SEE NOTE		11			

M. ASTM A276, TYPE 304, HOT ROLLED, ANNEALED AND A
N. ASTM A276, TYPE 304, COLD FINISHED, CONT. A
R. ASTM A276, TYPE 304, CENT. GRD. CONT. A
S. ASTM A240, TYPE 304, HOT ROLLED AND ETCHED
T. ASTM A276, TYPE 304, HOT ROLLED & FIELD, CONT. A

NOTES:

1. ALL [illegible] STRUCTURAL CONNECTIONS TO BE MADE BY TWO PARALLEL .187 FILLET WELDS OF TWO INCHES LONG MIN. UNLESS OTHERWISE SPECIFIED.
2. WELDING PER W.P.S. 29H129 (PROCEDURE AND WELDER QUALIFICATION SHALL BE IN ACCORDANCE WITH ASME CODE SECT. IX.)
3. [illegible] WELDS SHALL BE LIGHT PENETRANT TESTED AT RANDOM. BOTTOM SUPPORT FRAME TO VERTICAL ANGLE CONNECTION TO BE 100% LIQUID PENETRANT TESTED. TESTING TO BE IN ACCORDANCE TO W.P.S. 29H129, ACCEPTANCE STANDARD-QUALITY LEVEL D.
4. RACK ASSEMBLY TO BE FABRICATED IN SHOP SO THAT EACH STORAGE CELL CENTERLINE DOES NOT DEVIATE FROM ITS TRUE VERTICAL CENTERLINE BY MORE THAN 1/8 IN.
5. MAKE (20) FUEL STORAGE CELL SUB ASSEMBLIES (ITMS. 1,2,18,27, 29 & 30) BEFORE ERECTION OF STORAGE RACK.
6. INTERIOR SURFACES OF ITS. 1,2,27 & 29 & 30 (WHICH MAY COME INTO CONTACT WITH FUEL ASSY'S. SHALL BE SMOOTH. INTERIOR EDGES SHALL BE HAND FINISHED TO MIN. RAD. OF 1/8".
7. AFTER ASSY. A NEW FUEL ASSY. (2.104 LBS/SQ. FT/O.D.) MUST BE ABLE TO PASS INTO EACH ASSY. STORAGE POSITION WITHOUT BINDING.
8. THE RACKS SHALL BE DEGREASED, STEAM CLEANED, SHOT BLASTED FUSE IRON FREE ALUMINA OR SILICON GRIT) AND WATER RINSE.
9. RACKS TO BE PROTECTED DURING SHIPMENT FROM ROAD GRIME CONTAMINATION AND OTHER HAZARDS WHICH MAY BE DAMAGING
10. SPENT FUEL RACKS TO BE FIELD ERECTED SO THAT CORNER ANGLES OF RACK ARE VERTICAL WITHIN A MAXIMUM DEVIATION OF 1/8 IN. IN THE BETWEEN TOP AND BOTTOM. STAINLESS STEEL SHIMMING SHOULD BE USED IF REQUIRED. SHIMMING TO BE KEPT AT AN ABSOLUTE MINIMUM AND SUPPORT MUST BE PROVIDED FOR INTERIOR SUPPORT ANGLES AS WELL AS OUTER SUPPORT FRAME.

SEQUOYAH NUCLEAR PLANT
FINAL SAFETY
ANALYSIS REPORT

FIGURE 9.1.1-2
NEW FUEL STORAGE RACKS

(REVISED BY AMENDMENT 21)

CAD MAINTAINED DRAWING

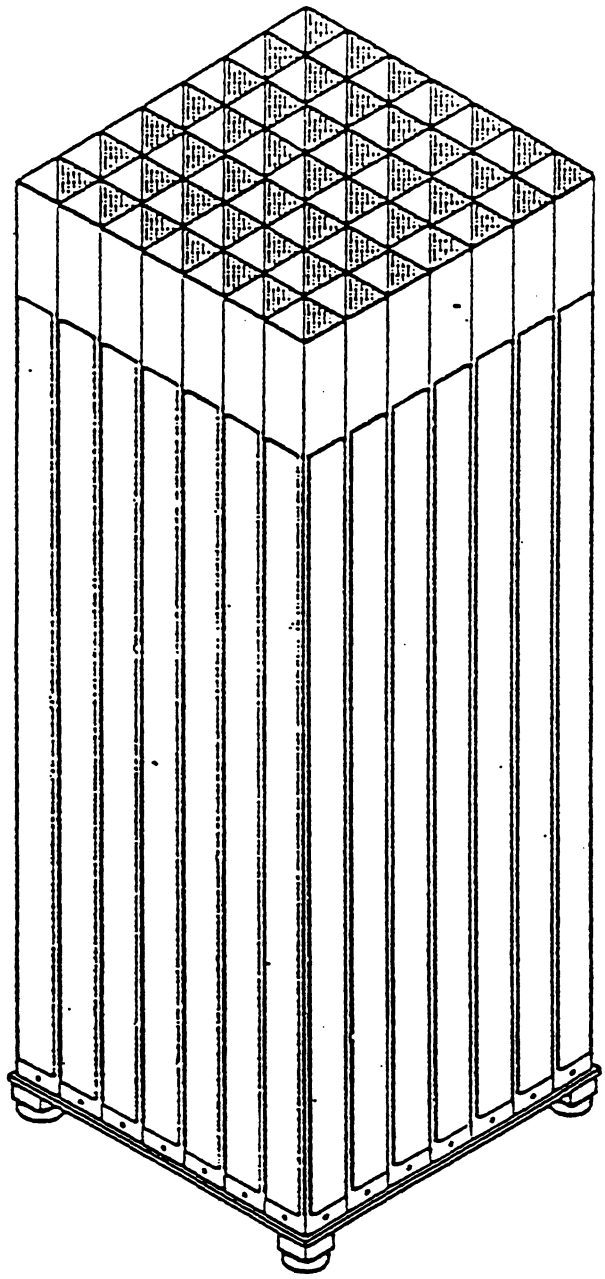

FIGURE 9.1.2-1
ISOMETRIC VIEW OF A TYPICAL
SPENT FUEL STORAGE RACK

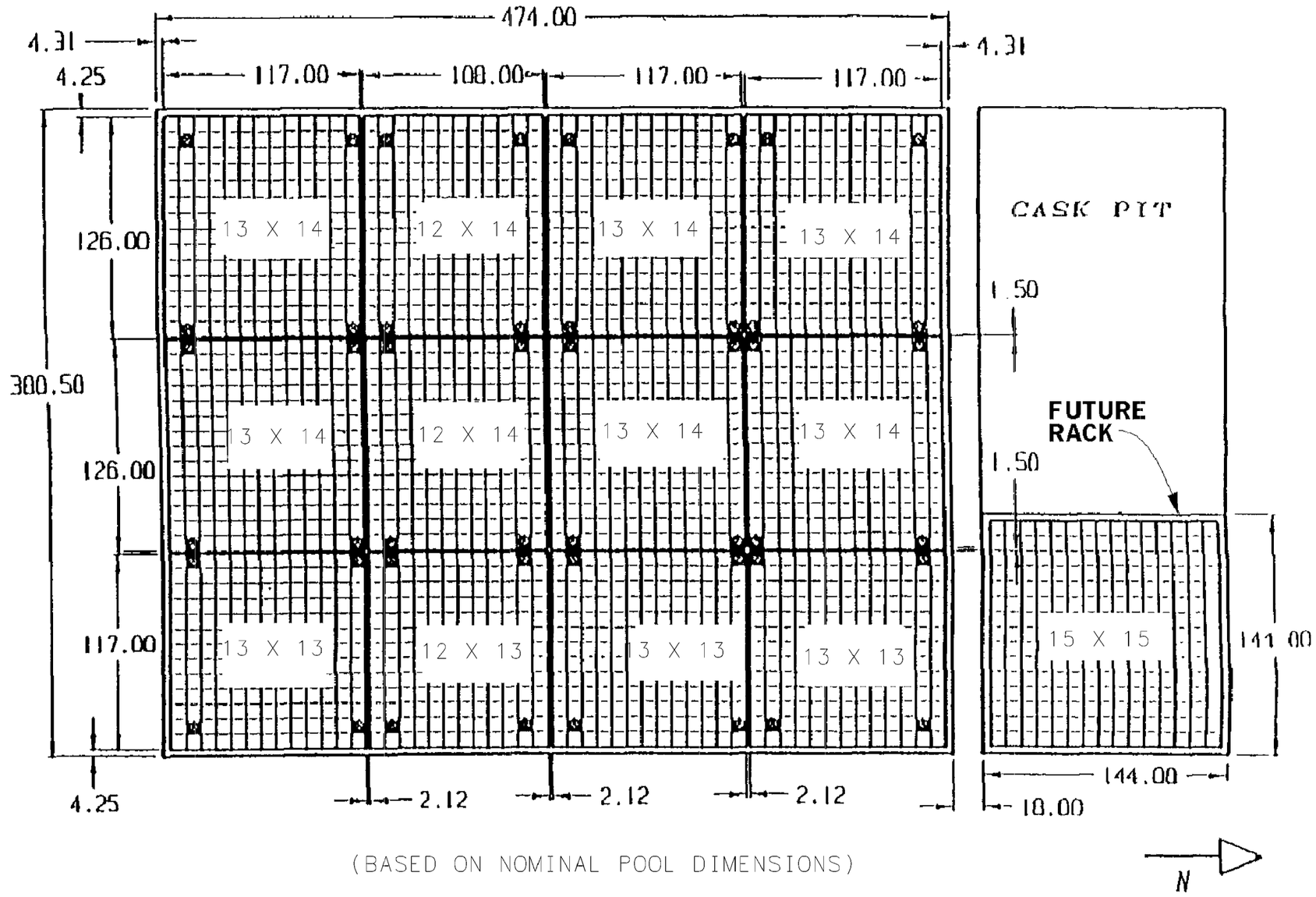

(BASED ON NOMINAL POOL DIMENSIONS)

SEQUOYAH NUCLEAR PLANT
FINAL SAFETY
ANALYSIS REPORT

FIGURE 9.1.2-2
MODULE LAYOUT IN THE SEQUOYAH SPENT FUEL POOL & CASK PIT
(REVISED BY AMENDMENT 13)

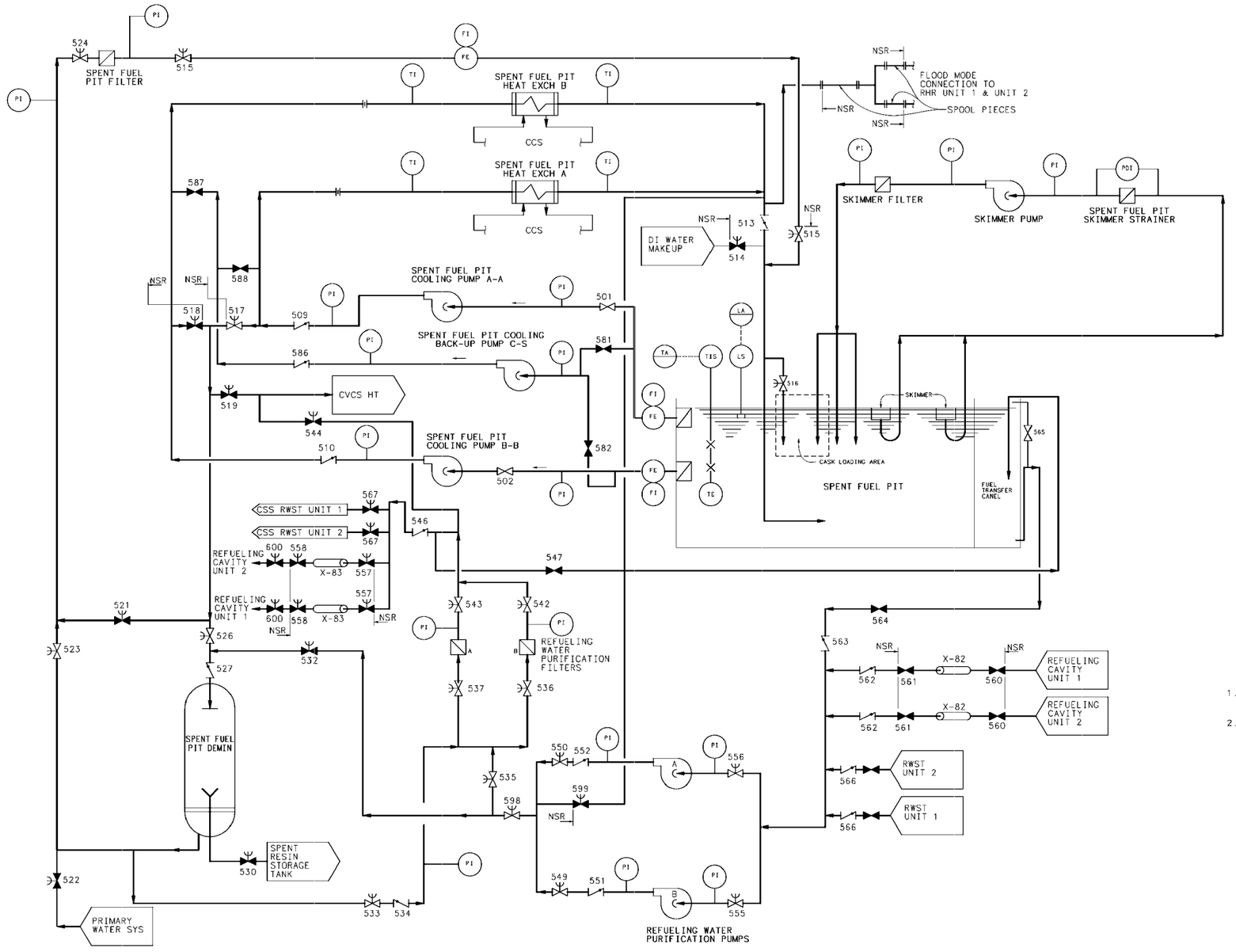

NOTES:

1. THIS SIMPLIFIED FLOW DIAGRAM IS NOT INTENDED TO SHOW VALVE TYPES, BUT RATHER THAT A VALVE IS LOCATED AS SHOWN.
2. NSR DEFINES NON-SAFETY RELATED BOUNDARY.

SEQUOYAH NUCLEAR PLANT
FINAL SAFETY
ANALYSIS REPORT

FIGURE 9.1.3-1
SPENT FUEL PIT COOLING SYSTEM
(REVISED BY AMENDMENT 13)

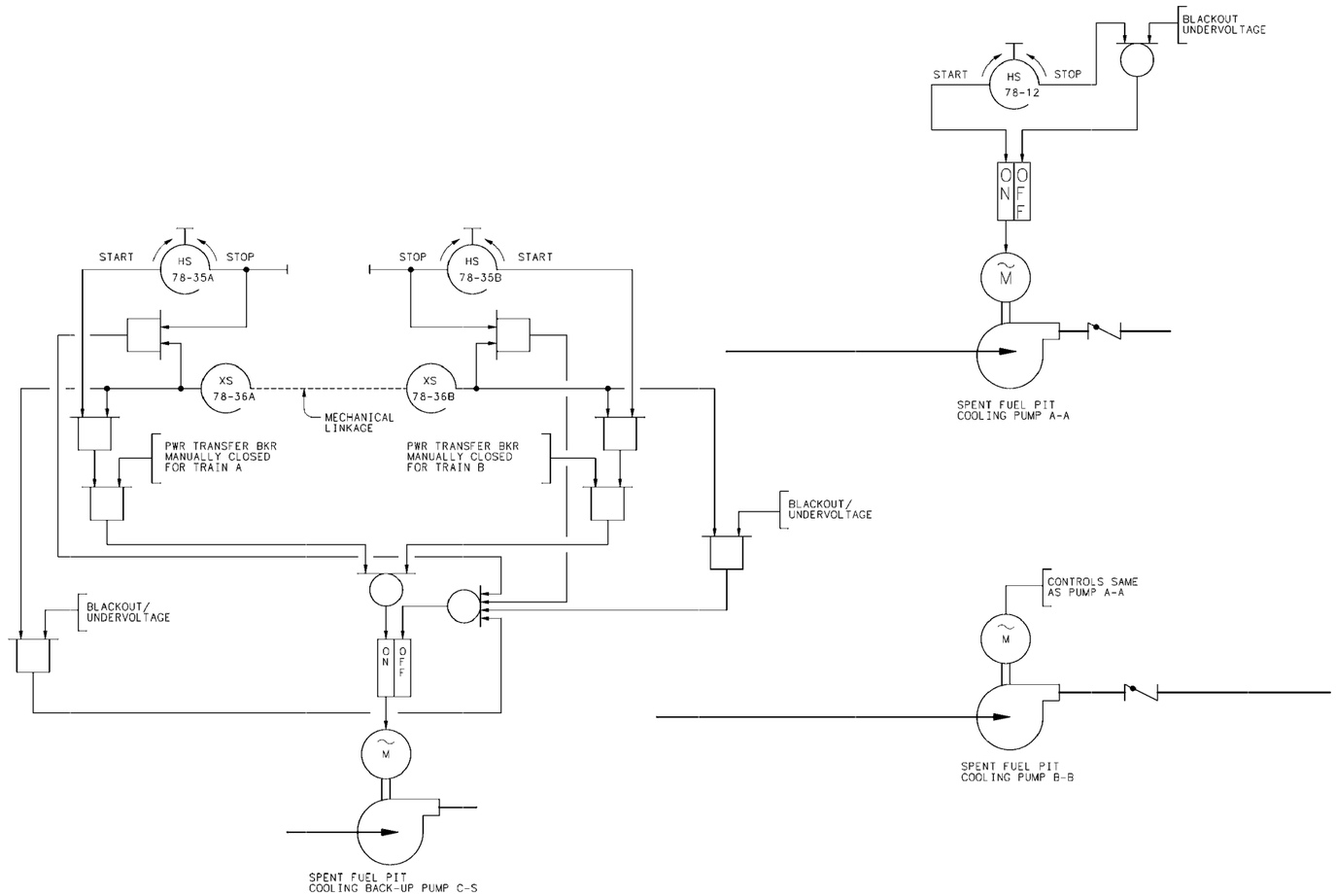

SEQUOYAH NUCLEAR PLANT
FINAL SAFETY
ANALYSIS REPORT

FIGURE 9.1.3-2

SPENT FUEL PIT COOLING PUMP LOGIC

(REVISED BY AMENDMENT 13)

DRAWING SERVICES UNIT
PROCAD MAINTAINED DRAWING
THIS CONFIGURATION CONTROL DRAWING IS MAINTAINED BY THE SSN CAD UNIT AND IS PART OF THE TVA PROCADAM DATABASE.
COMPUTER GRAPHICS

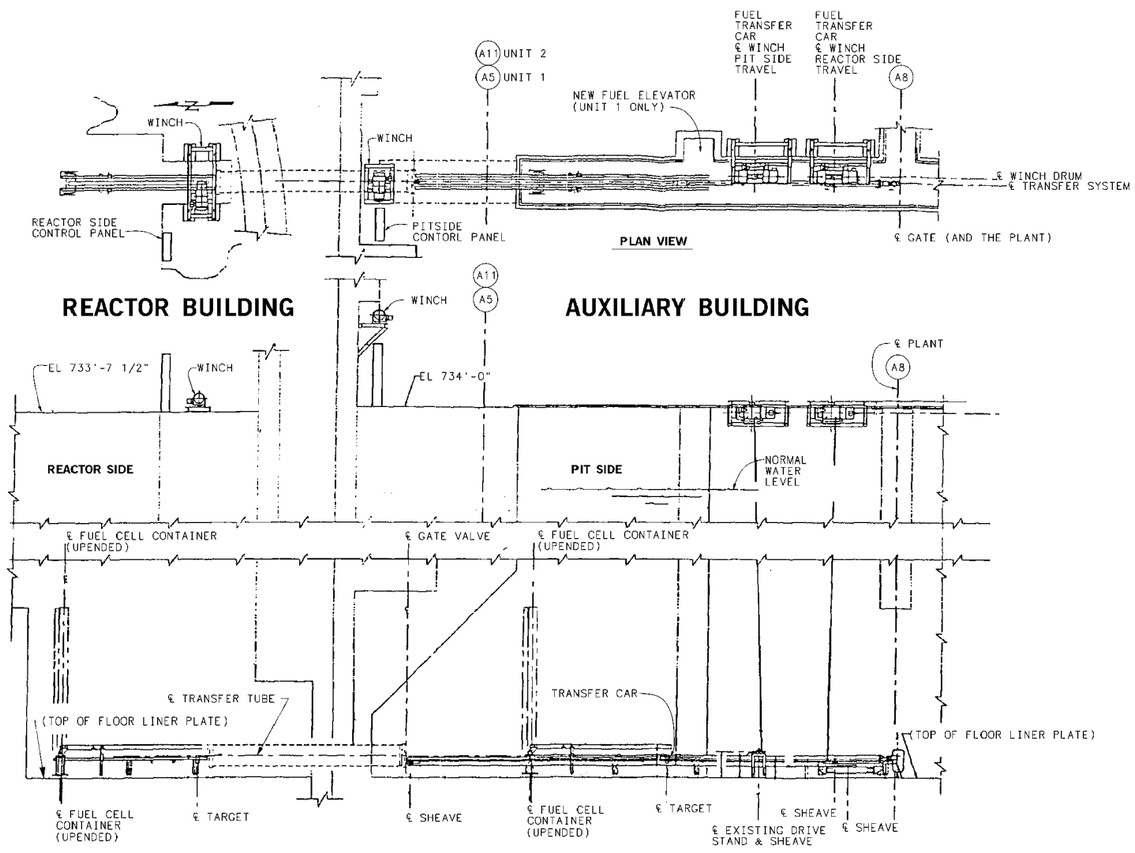

ELEVATION VIEW
(LOOKING EAST)
UNIT 1 AS SHOWN
UNIT 2 OPPOSITE HAND

SEQUOYAH NUCLEAR PLANT
FINAL SAFETY
ANALYSIS REPORT

FIGURE 9.1.4-1
FUEL TRANSFER SYS LAYOUT

(REVISED BY AMENDMENT 15)

DRAWING SERVICES UNIT
PROCAD MAINTAINED DRAWING
THIS CONFIGURATION CONTROL DRAWING IS MAINTAINED BY THE SQN CAD UNIT AND IS PART OF THE TVA PROCADAM DATABASE.
COMPUTER GRAPHICS

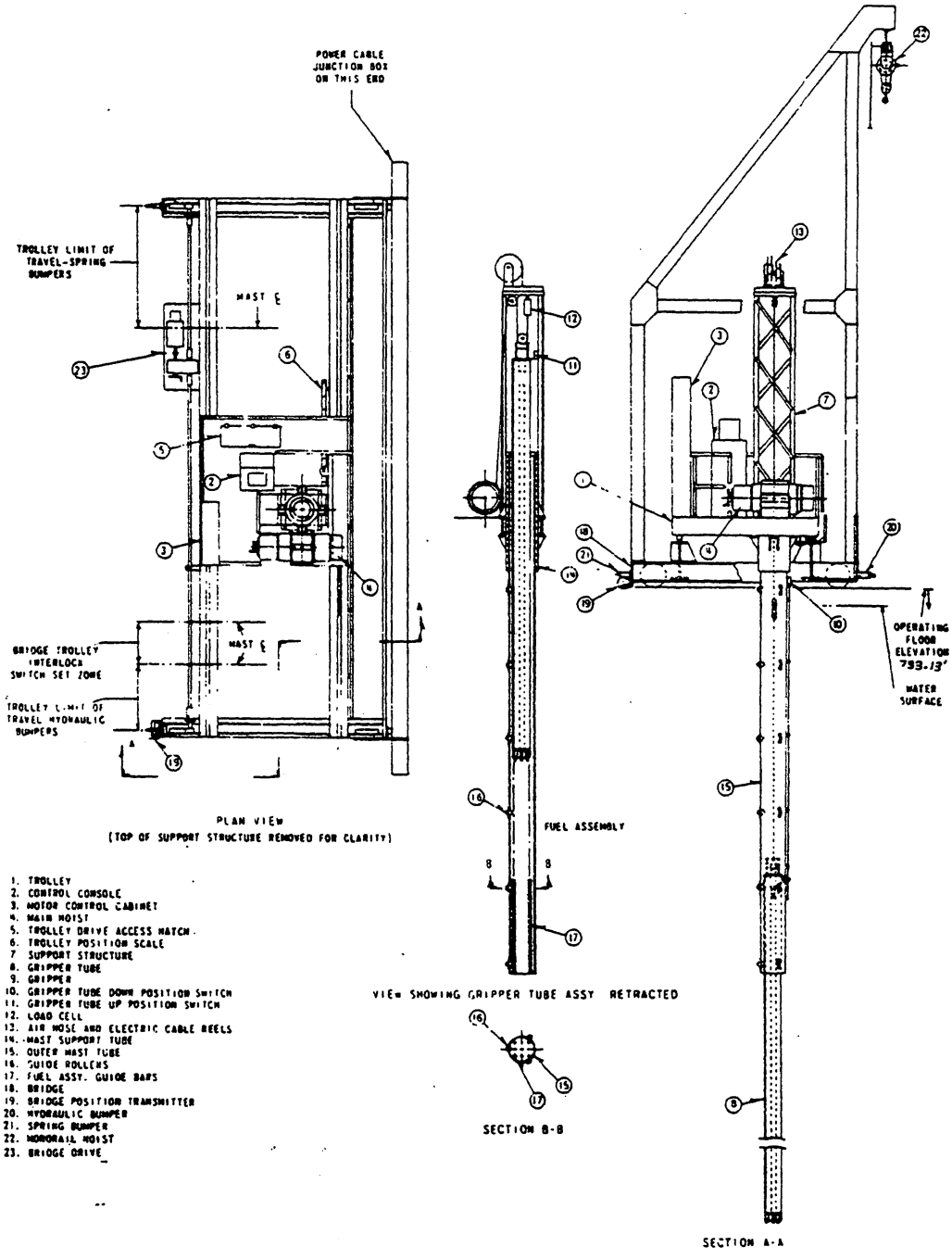

Figure 9.1.4-3 Typical Manipulator Crane

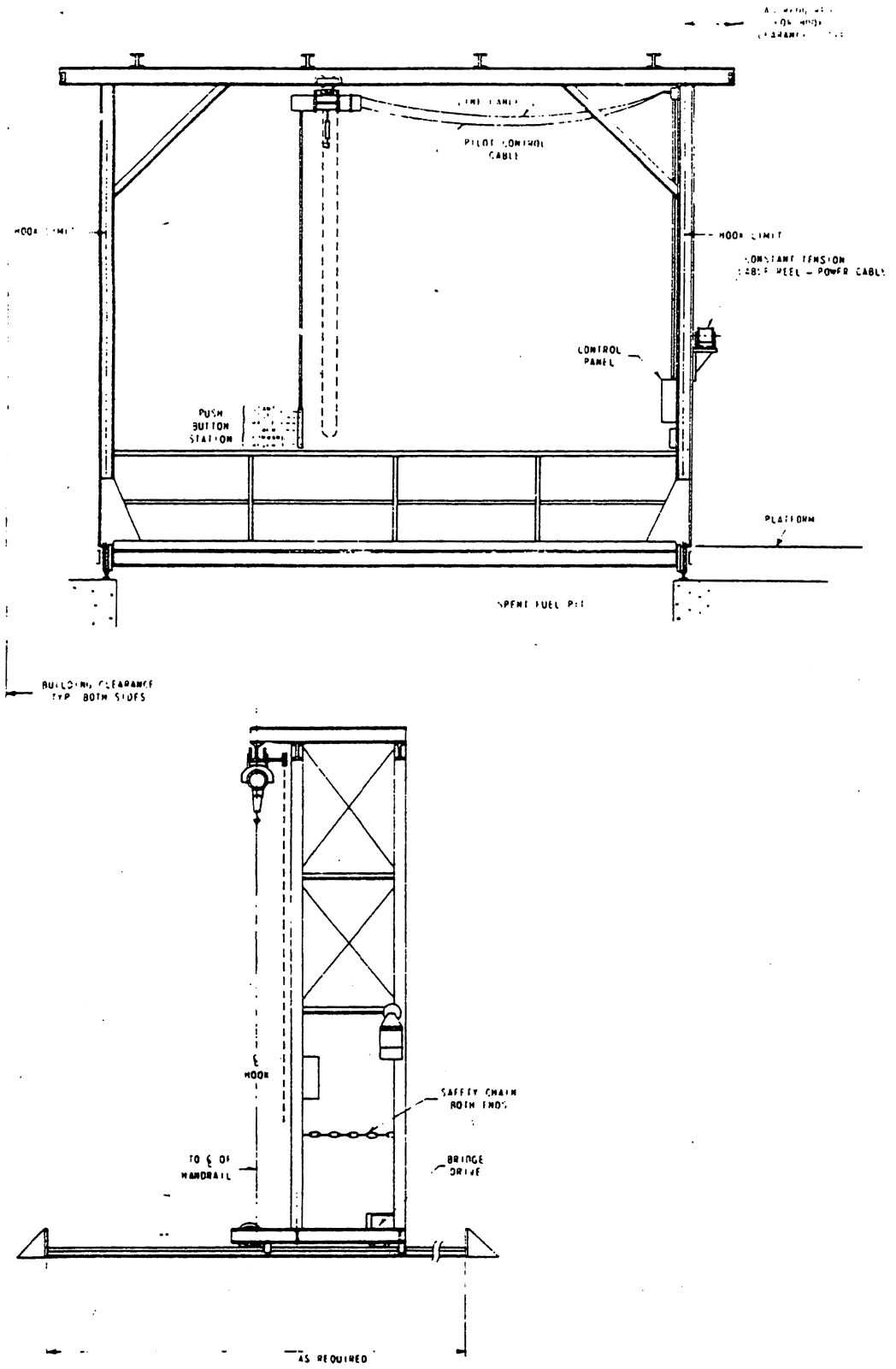

Figure 9.1.4-4 Typical Spent Fuel Pit Bridge

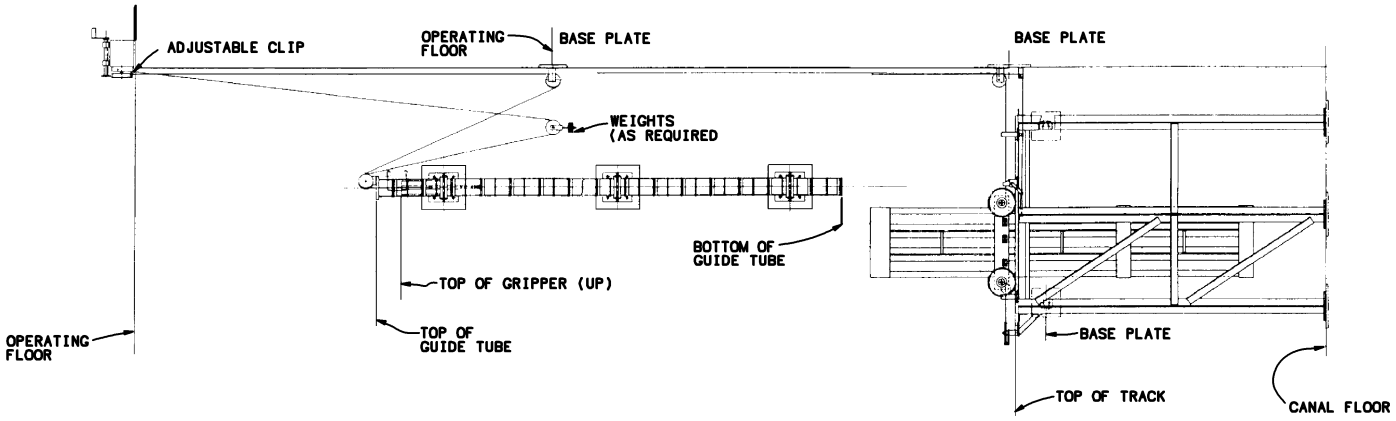

SEQUOYAH NUCLEAR PLANT
FINAL SAFETY
ANALYSIS REPORT

FIGURE 9.1.4-5
ROD CLUSTER CONTROL
CHANGING FIXTURE
(REVISED BY AMENDMENT 13)

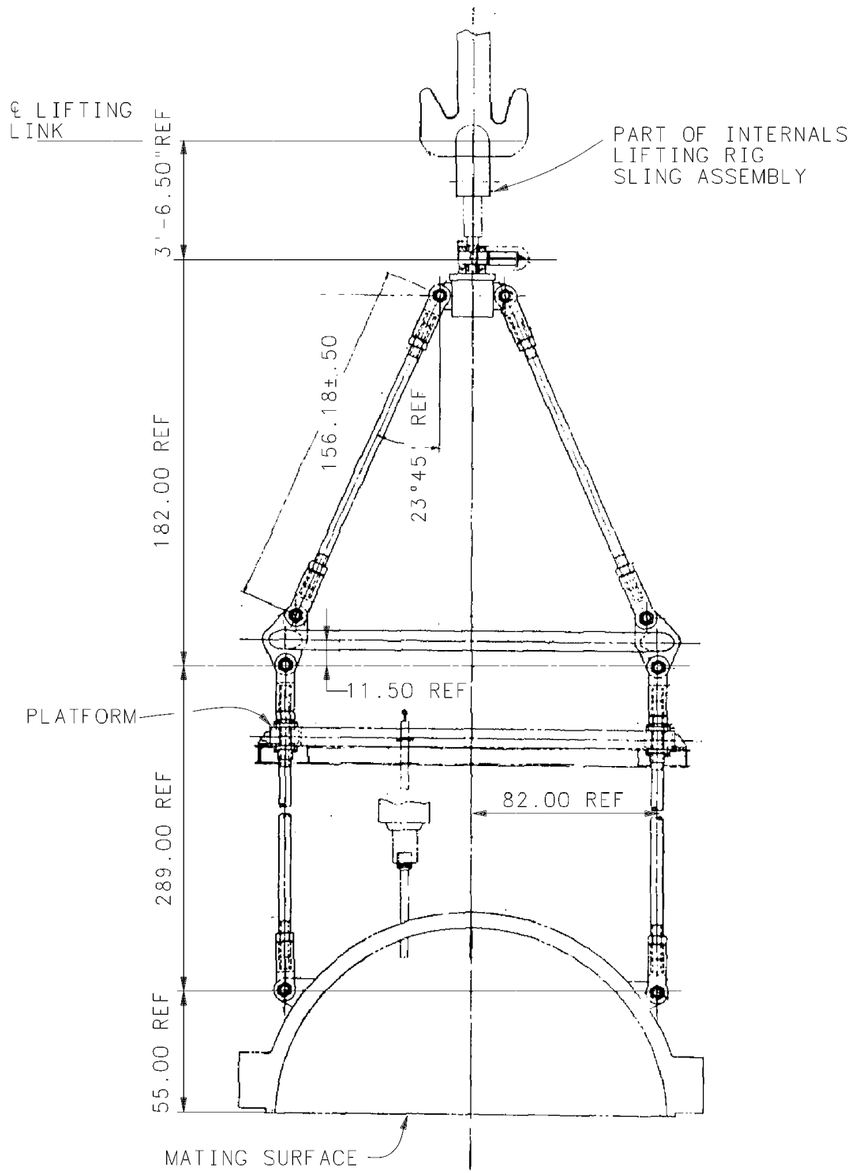

ELEVATION

SEQUOYAH NUCLEAR PLANT
FINAL SAFETY
ANALYSIS REPORT

FIGURE 9.1.4-6
REACTOR VESSEL HEAD
LIFTING DEVICE
(REVISED BY AMENDMENT 13)

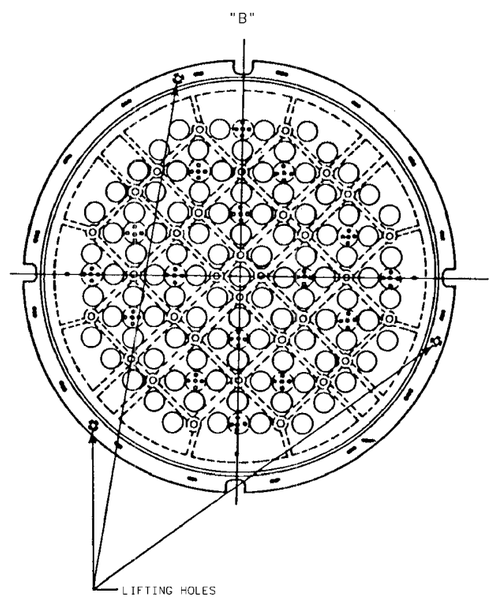

PLAN VIEW OF UPPER CORE SUPPORT STRUCTURE

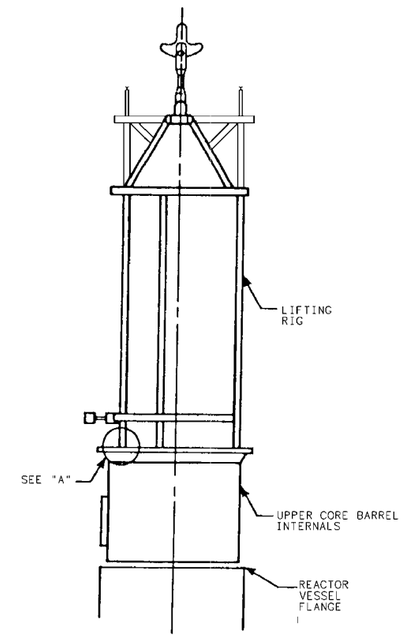

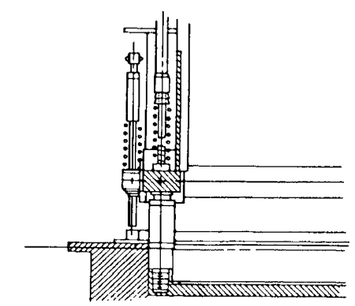

DETAIL A

SEQUOYAH NUCLEAR PLANT
FINAL SAFETY
ANALYSIS REPORT

FIGURE 9.1.4-7

REACTOR INTERNALS LIFTING DEVICE
(REVISED BY AMENDMENT 18)

CAD MAINTAINED DRAWING

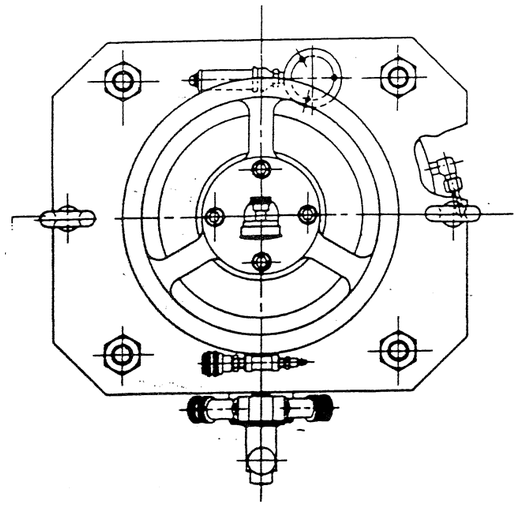

TOP VIEW

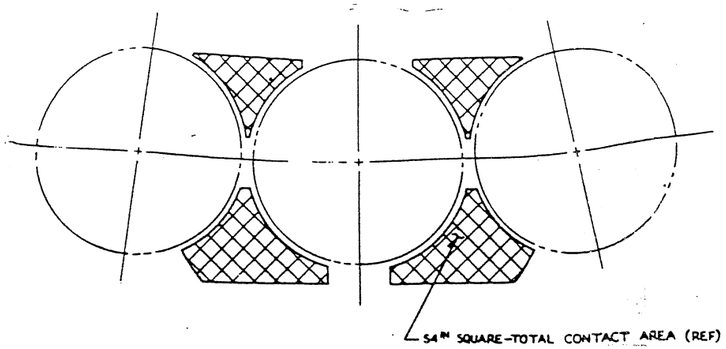

BOTTOM VIEW

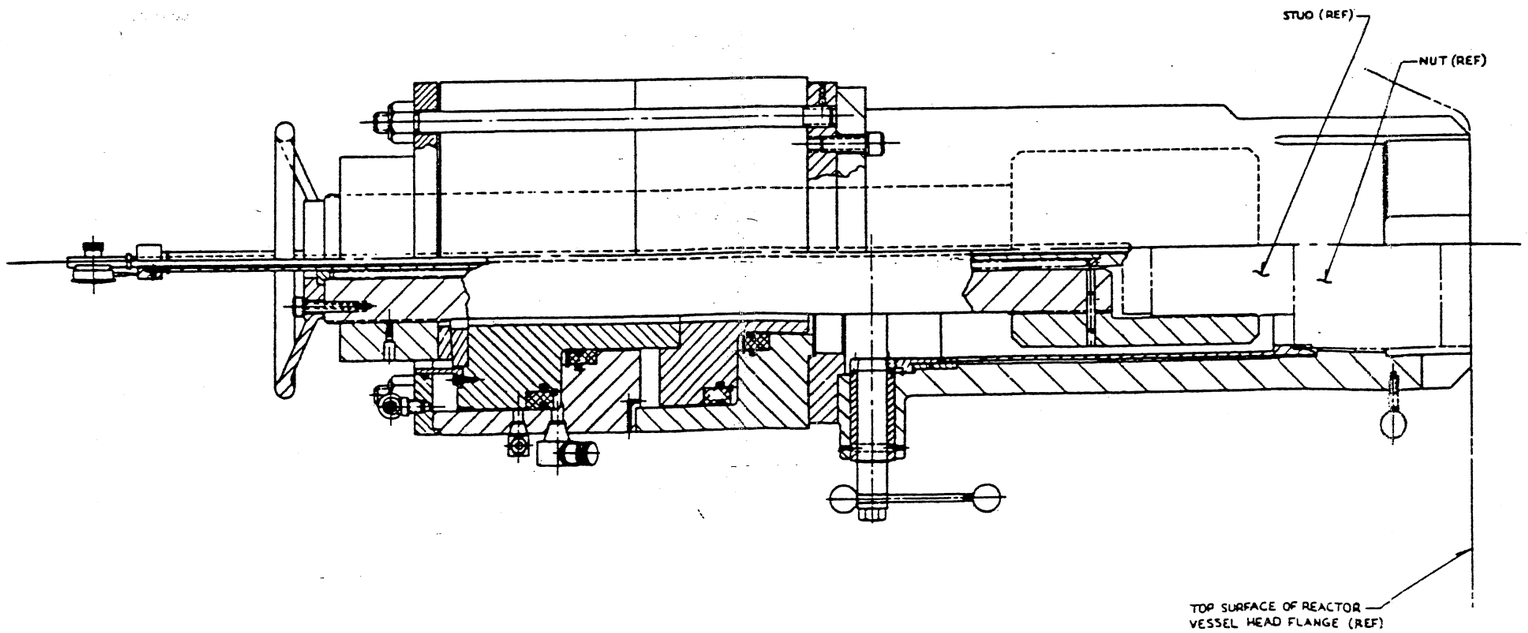

Figure 9.1.4-8 Typical Vessel Stud Tensioner

9.2 WATER SYSTEMS

9.2.1 Component Cooling System

9.2.1.1 Design Bases

The CCS is designed for operation during all phases of plant operation and shutdown.

The CCS is designed to remove residual and sensible heat from the Reactor Coolant (RC) System via the Residual Heat Removal System (subsection 5.5.7) during plant cooldown; cool the spent fuel pit water and the letdown flow for the Chemical and Volume Control System; provide cooling to dissipate waste heat from various plant components; and provide cooling for safeguard loads after an accident.

The systems served by the CCS are:

1. Reactor Coolant System
2. Residual Heat Removal System
3. Chemical and Volume Control System
4. Waste Disposal System
5. Sampling System
6. Safety Injection System
7. Spent Fuel Pool Cooling and Cleanup System
8. Containment Spray System

Since heat from these systems is transferred by the component cooling water to the Essential Raw Cooling Water (ERCW) System (Subsection 9.2.2) via the component cooling heat exchangers, the CCS serves as an intermediate system between systems it serves and the ERCW System (the heat sink for the CCS). This double barrier arrangement reduces the probability of leakage of potentially radioactive water to the ERCW System and to the river or atmosphere.

The CCS design is based on a maximum ERCW temperature of 87°F.

The Component Cooling Water System is designed such that no single active or passive failure will interrupt cooling water to both A and B safeguard trains. One safeguard train is capable of providing sufficient heat removal capability for reactor cooldown.

The CCS pumps and required motor-operated valves will be automatically transferred to emergency onsite power upon loss of offsite power.

9.2.1.2 System Description

The CCS shown in Figures 9.2.1-1 through 9.2.1-4 is a closed-loop, two train cooling system consisting of five CCS pumps, four thermal barrier booster pumps, three pairs of plate heat exchangers (PHEs), two surge tanks, CCS pump seal water collection unit, and associated valves, piping and instrumentation serving both units. The heat exchangers are designated as Heat Exchangers 1A1/1A2, 2A1/2A2 and OB1/OB2. PHEs 1A1/1A2 serves train A loads in unit 1, PHEs 2A1/2A2 serves train A loads in unit 2, and PHEs OB1/OB2 serves train B loads in both units.

During normal operation, the system is designed to provide component cooling water at a temperature that ranges from approximately 35°F to 95°F. This temperature varies depending on the equipment heat loads and the ERCW System temperature. During normal operations, CCS Train B temperature may track ERCW temperature to a minimum of 35°F. CCS Train A heat loads are sufficient to maintain CCS temperature above 40°F. During a unit shutdown, the component cooling water temperature can approach 120°F when the ERCW System is at the design basis temperature of 87°F. During a loss-of-coolant accident (LOCA-Recirc), CCS temperature may reach 104.5°F. System design pressure and temperature are 150 lb/in^{2}g and 200°F respectively, except part of the RC pumps thermal barrier cooling water piping inside containment, which is designed for 2485 lb/in^{2}g and 650°F, and the thermal barrier booster pump discharge piping up to the RC pumps thermal barrier inlet check valves, which is designed for 200 lb/in^{2}g and 200°F. To prevent overpressure of thermal barrier cooling water discharge line subsequent to a thermal barrier tube rupture and containment isolation, this line is designed to contain pressure and temperature equal to the RC System. The supply line to the thermal barrier is protected from this high pressure by two check valves located at the RC pump connection. The design pressure (200 lb/in^{2}g) for the Thermal Barrier Booster Pump discharge piping up to the RC pump thermal barrier inlet check valves was selected to accommodate the additional head provided by the booster pumps. The design pressure (150 lb/in^{2}g) for the remainder of the CCS was selected to exceed the maximum operating pressure applied to the system.

Under normal power operation, the CCS will require the use of one component cooling water pump (i.e., 1A-A, or 1B-B in unit 1 and 2A-A or 2B-B in unit 2) and the CCS heat exchangers in train A of each unit. One additional CCS pump may be needed in the unit carrying the SFP heat exchanger. Normally, only CCS pump C-S will be aligned to the train B headers. During stages of operation when the required flowrate exceeds the design flowrate of one pump, it may be necessary to use two component cooling water pumps. Either pumps 1B-B or 2B-B can be realigned to the train B headers if necessary. Pump C-S shall normally be powered from train B electrical circuits. However, the electrical system shall be designed so that the power feed can be switched to train A. Valves can be repositioned upon loss of train B to align pump C-S to either train A header and thereby provide additional train A capacity if needed.

Either unit's CCS A train can supply both spent fuel pit heat exchanger loads. Remote-operated valving is provided to transfer the supply line to the heat exchangers to the A train header of the other unit if the heat and flow loads so require. The return line must be aligned to the CCS pump suction by locally opening and closing the appropriate valves. If train A should be lost, spent fuel pit cooling may be provided from CCS plate heat exchangers OB1 and OB2 by locally opening the appropriate valves to interconnect the train A and train B headers. This will require realignment of pump 1B-B or 2B-B to plate heat exchangers OB1 and OB2.

For minimum rate cooldown, two pumps and one CCS heat exchanger pair may be required to remove the residual heat and the aligned component loads; however, unit cooldown procedures and the CCS design allow assignment of a pump and heat exchanger pair to each train of the safeguards system thereby increasing cooldown capability. A surge tank is provided for each unit, and each tank is separated into two parts by a baffle providing separate minimum surge volume for each safeguard cooling train.

Since portions of the CCS are required for post-accident removal of decay heat from the reactor, these portions are considered engineered safety features and are therefore designed to meet the single active or passive failure criteria. Either unit (accident unit) may be aligned with two completely independent cooling system Trains (A and B) serving safeguard equipment and one train serving miscellaneous service components of a unit. The third component cooling heat exchanger pair (OB1 and OB2) and CCS pump (C-S) are aligned to the accident unit during the

safety injection phase of a LOCA to establish the cooling train serving train "B" safeguard equipment. The CCS B Train pump (1B-B, 2B-B) is normally aligned through the A Train CCS heat exchangers (1A1/1A2, 2A1/2A2). This alignment provides flow through the CVCS seal water heat exchanger for attendant equipment cooling of CCP B-B main flow upon loss of A Train Power. The component cooling heat exchanger pair and CCS pump or pumps normally assigned to the unit supply cooling water to "A" safeguard equipment also supply miscellaneous service components of that unit. Each safeguard cooling train consists of one pump, one heat exchanger pair, and a separate compartment in the unit surge tank. Each safeguard cooling train is capable of fulfilling cooling requirements for the accident unit; therefore, the second train provides 100 percent redundancy and can be placed in service if desired to increase system cooling capability. The spent fuel pit cooling supply can be aligned to either unit; therefore, it will be aligned to the non-accident unit in order to provide immediate CCS pump redundancy.

Cooling water for the CCS heat exchangers is supplied from the ERCW System ensuring a continuous source of cooling medium.

During normal conditions component cooling water can be provided for the following equipment:

1. Residual heat removal heat exchangers.
2. Reactor coolant pump thermal barriers.
3. Reactor coolant pump upper oil heat exchangers.
4. Reactor coolant pump lower oil heat exchangers.
5. Seal water heat exchanger.
6. Spent fuel pit heat exchangers.
7. Sample heat exchangers and hot sample chiller.
8. Letdown heat exchanger.
9. Residual heat removal pump seal water heat exchanger.
10. Safety injection pumps mechanical seal coolers.
11. Charging pumps mechanical seal coolers.
12. Waste gas compressors.
13. Post accident sample coolers.
14. Excess letdown heat exchanger.
15. Containment spray pump oil and seal jacket heat exchangers.

Component cooling water is circulated first through the component cooling system heat exchangers, to the components using the cooling water, and finally back to the pump suction. The surge tank for each unit is separated into two sections by a baffle. Each section is tied into the pump suction lines from safeguard trains. This tank accommodates expansion and contraction of the system water due to temperature changes or in leakage, as well as providing a continuous water supply until a small leak in the system can be isolated. Because the surge tank is normally vented to the building atmosphere, a radiation monitor is provided in each component cooling water heat exchanger pair discharge line. These monitors actuate an alarm and close the appropriate surge tank vent valve when the radiation reaches a preset level above the normal background.

Cooling water is available to all components served by the system, even though one or more of the components may be isolated. The system is provided with adequate valves to permit realignment or isolation of equipment and cooling water headers. (Valves are actuated to provide the residual heat exchangers with cooling water during startup, cooldown, and loss- of-coolant accident.)

Normal system makeup is provided from the demineralized water system. Emergency makeup is provided from the ERCW System through a metered spool piece.

The component cooling water contains a corrosion inhibitor to protect the carbon steel piping. The component cooling water chemistry for normal operation of the plant is specified in the plant chemistry program.

The CCS system characteristics used as the basis for CCS pump procurement are shown in Figure 9.2.1-5. Pump logic is shown in Figure 9.2.1-7.

9.2.1.3 Components

Component Cooling System codes and classification are given in Section 3.2. Equipment design parameters are given in Table 9.2.1-1.

9.2.1.3.1 Component Cooling Heat Exchangers

The three pairs of component cooling water heat exchangers are of the plate type. ERCW circulates through alternating plates to remove the heat from the CCS which circulates through the remaining plates. See Table 9.2.1-1.

For equipment maintenance reasons, the Component Cooling System (CCS) may occasionally be operated with only one of the two heat exchangers that comprise a pair for each train in service. This is subject to limitations on the temperature of the ERCW to the CCS heat exchangers.

9.2.1.3.2 Component Cooling Pumps

The five component cooling water pumps which circulate water through the component cooling loops are horizontal centrifugal units of standard commercial construction. The pump motors receive electric power from normal or emergency sources. Each of the four normally assigned pumps (2 per unit) is connected to one of the four shutdown boards. The fifth pump can be powered from either of two assigned shutdown boards.

9.2.1.3.3 Thermal Barrier Booster Pumps

The four booster pumps (2 per unit) circulate cooling water through the reactor coolant pump thermal barriers. The booster pumps provide additional head overcoming the head loss through the thermal barriers to allow the CCS pumps to operate at a lower total head, supplying the remaining component cooling loops at a lower operating pressure. One booster pump supplies the thermal barrier requirements (160 gal/min) for each unit. A second pump is assigned to each unit to provide 100 percent redundancy. RCP TB flow can be maintained without the TBB Pumps to support the RCP's safety functions, (reference 3). The pumps are horizontal centrifugal units of standard commercial construction. The pump motors receive electric power from normal or emergency sources. Pump logic is shown in Figure 9.2.1-6.

9.2.1.3.4 Component Cooling Surge Tanks

The component cooling water surge tanks accommodate changes in component cooling water volume.

Each unit is provided with one tank for unit separation. Each tank has an internal baffle divider to provide two separate surge volumes for safeguard train separation within each unit. This arrangement provides redundancy for a passive failure during recirculation following a LOCA.

9.2.1.3.5 Valves

Valves used in the CCS are of standard commercial grade carbon and stainless steel construction. Self-actuated spring-loaded relief valves are provided for lines and components that could be pressurized beyond their design pressure by improper operation or malfunction.

A relief valve has been provided on the CCS piping downstream of the excess letdown heat exchanger. This relief valve has been sized to relieve in leakage from a heat exchanger tube leak while the CCS side is isolated.

Except for the normally closed makeup line, equipment vent and drain lines and flood mode spool pieces, there are no connections between the component cooling water and other systems. The equipment vent and drain lines outside the containment have manual valves which are normally closed unless the equipment is being vented or drained for maintenance or repair.

Relief valves other than those on the CCS surge tanks or excess letdown heat exchangers have been sized to relieve the volumetric expansion occurring if the exchangers' CCS side is isolated while high temperature coolant flows through the other side. Discharged water either bypasses the downstream isolation valve and returns to the system or is directed to the waste disposal system.

Relief valves on the component cooling surge tanks are sized to relieve the maximum flow rate of water which enters the surge tank following a tube rupture in the residual heat removal heat exchanger. The set pressure is set below the design pressure of the surge tank. The discharge of these valves is directed to the floor drain collector tank.

The surge tank vent-overflow line, which is open to the auxiliary building atmosphere, is equipped with an air-operated valve that closes automatically if radiation is detected in the system. A vacuum breaker valve is also provided to prevent collapsing the tank in the event of a large loss of water in the system.

Additional discussion on valves is provided in Section 9.2.1.7.6.

9.2.1.3.6 Piping

Component Cooling Water System piping is principally seamless carbon steel, ASTM A 106, Grade B, with welded joints and connections except flanges at components which might require removal for maintenance. The thermal barrier relief valves are threaded. CCS piping is standard weight except the RCP thermal barrier piping which is schedule 160 from the upstream check valve to the last containment isolation valve.

9.2.1.4 Safety Evaluation

The CCS is a two-train system, each train having the capability to provide the maximum cooling water requirement for both units under any credible plant conditions. These equipment trains are sufficiently independent to guarantee the availability of at least one train at any time. The

system has been analyzed for "worst case" heat loads under combinations of maximum river water temperature, design basis accident conditions, normal cooldown requirements, power train failures, etc., for both units. It is found through these analyses that sharing of this system by the two nuclear units does not introduce factors that prevent the system from performing its required function for plant design basis condition.

Component cooling water pumps, heat exchangers, and associated valves, piping, and instrumentation that are located outside the containment are available for maintenance and inspection during power operation. Maintenance on a pump or heat exchanger is practical while redundant equipment is in service subject to limitations of the technical specifications.

Sufficient cooling capacity is provided to fulfill system requirements under normal and accident conditions. Adequate safety margins are included in the size and number of components to preclude the possibility of a component malfunction adversely affecting operation of safeguards equipment. Active system components considered vital to the cooling function are redundant. Any single active or passive failure in the system will not prevent the system from performing its design function. Should a single failure result in the loss of a train of equipment (A or B) the other train is available for handling all required heat loads. The alignment of the CCS 1B and 2B pumps through the A train CCS heat exchangers (1A1/1A2, 2A1/2A2) and the CVCS seal water heat exchanger provides single active failure protection (in the short term) for CCP miniflow cooling. (References 4, 5, 6, & 7)

The component cooling water pumps are automatically placed on emergency power in the event of loss of offsite power; therefore, the minimum safeguards requirements are met with regard to supply of component cooling water. Separate trains provide component cooling water to the Engineered Safety Features. Each train services its safety-related cooling loads associated with the same train.

9.2.1.5 Leakage Provisions

To minimize the possibility of leakage from piping, valves, and equipment, welded joints are used wherever possible. Flanged joints are used at flood mode connections, flow element connections, and to facilitate inspection/maintenance where a component must be removed from the system such as for butterfly valves and pumps.

A seal leakage collection station is provided to collect seal leakage from the component cooling pumps and return it to the system via the CCS surge tanks. The collection station consists of one collection tank and two seal leakage return pumps. The pumps alternate operation to return equal seal leakage volume to each unit surge tank. This system is not safety related.

Safety grade make-up to the CCS is provided by ERCW through a metered spool piece connection at the CCS surge tanks. Normal makeup is provided by the demineralized water system to the surge tanks.

The component cooling water could become contaminated with radioactive water due to one of the following conditions:

1. A leak in any heat exchanger tube in the Chemical and Volume Control System, Residual Heat Removal System, Sampling System, or the Spent Fuel Pit Cooling System.
2. A leaking cooling coil for the thermal barrier cooler on a reactor coolant pump.
3. Seal heat exchanger leakage from various system pumps.

9.2.1.6 Incidental Control

If out leakage occurs anywhere in the system, detection is accomplished by falling level in the surge tank which will actuate a low level alarm in the control room. Level alarms from the sumps to which this water will drain also serve as leak indicators. In-leakage is detected by a high-level alarm in the surge tanks and radiation monitoring. Leak detection and control is provided by level instrumentation for the Train A side of either surge tank, which contains the Class G sample heat exchangers and chiller package. The leaking portion of the system can be located by visual inspection, radiation monitoring, leak tests, and isolated if necessary.

9.2.1.7 Instrument Applications

9.2.1.7.1 General Description

The CCS, being a water heat transfer system, uses inputs of flow, level, pressure, and temperature for instrumentation. Electric power to the transducers in the instrumentation loops is the same as the equipment being served. Loss of a power train would result in only loss of instrumentation and control of equipment that is no longer functional. Control of the system is through air-and motor-operated valves.

9.2.1.7.2 Flow Instrumentation

Flow instrumentation is provided to monitor the essential portions of the CCS. Local instrumentation is provided for the inlet flow to the plate HX pairs. Instruments are provided to monitor the flow at the outlet of other safety-related heat exchangers in the main control room. Instrumentation is also provided to monitor the flow in the safeguards equipment supply headers, Reactor Building supply headers, and the miscellaneous equipment supply headers from the main control room.

Flow instrumentation is provided on the RCP thermal barrier supply and discharge piping to initiate isolation of the CCS flow upon indication of a thermal barrier leak sensed by a flow mismatch. This flow mismatch signal initiates closure of redundant supply valves to the RCP thermal barriers.

9.2.1.7.3 Level Instrumentation

Surge tank level measurements are used to monitor and control the total amount of water in the system. Should there be leakage into the system, the level will rise and activate a high-level switch for annunciation in the control room. Indication of exact level is displayed in both the main and auxiliary control rooms. Leakage out of the system is detected by a low-level switch which activates valve LCV-70-63 to provide demineralized water makeup to the system. A low-low signal on the Train A side of either surge tank indicates a probable break in the Class G sample cooler/chiller piping and causes an automatic closure of valves FCV-70-215 and FCV-70-216.

9.2.1.7.4 Pressure Instrumentation

Local pressure indication for the suction and discharge of the pumps and the main supply header to various plant equipment is provided for all CCS pumps and the thermal barrier booster pumps. Pressure indication in the main and auxiliary control rooms is not required in order to mitigate any accident scenario. Pressure indication is used to monitor pump developed head to ensure that the minimum pump flow is met. The main control room contains pressure indication and low pressure annunciation for the Train A discharge header for Units 1 and 2, but not for the Train B common header. High-High discharge pressure annunciation is provided in the main control room for each CCS pump.

9.2.1.7.5 Temperature Instrumentation

Temperature instrumentation is provided to monitor the essential portions of the CCS. Instrumentation is provided to monitor the temperature of each phase of the CCS pump motor stator windings and each CCS pump motor bearing. Monitoring instrumentation is also provided at the outlet of each CCS heat exchanger pair and each RHR heat exchanger. Readout for the above instrumentation is provided in the main control room. Local provisions are made for temperature measurement at the outlet of all other safety-related heat exchangers.

9.2.1.7.6 Valves

Most of the valves in the system are manual valves used for sampling, venting, and testing. Motor-operated, non-throttling, fail as-is type valves are used mostly to isolate sections of the system. All control switches are located in either the main control room, the auxiliary control station, or both. Some motor-operated valves are equipped with local control switches to facilitate maintenance and testing. Valve LCV-70-63 is an automatic air-operated, fail-closed, makeup water level control valve for the surge tank. Valve FCV-70-66 is an air-operated, fail-closed, vent valve for the surge tank that closes on a high radiation signal. Valve FCV-70-85 is an air-operated, fail-closed, containment isolation valve to the excess letdown heat exchanger. Valves FCV-70-215 and FCV-70-216 are automatic air operated isolation valves on the upstream and downstream side of the Class G sample coolers, respectively, which close upon a low-low level signal from the Train A side of the surge tank. Additional containment isolation valves are provided for CCS lines penetrating containment (i.e., RCP thermal barrier, RCP oil coolers, excess letdown HX). Throttling valves are used for process control.

9.2.1.7.7 Conclusion

Since CCS is a safety buffer system between the radioactive primary water and the raw cooling water, the instrumentation provides the necessary data and controls for the operator to ensure the functional safety of the system.

9.2.1.8 Malfunction Analysis

A failure analysis of pumps, heat exchangers, valves, and piping is presented in Table 9.2.1-2.

9.2.1.9 Tests and Inspections

Active components of the CCS are periodically tested, as applicable, in accordance with Technical Specifications and ASME Section XI requirements. Containment isolation valves are tested periodically (see technical specifications and 6.2.4). Tests of the transfer system between normal and emergency power sources are conducted in accordance with Technical Specifications. Visual inspections and preventive maintenance are conducted in accordance with approved plant maintenance program procedures. The design codes for the CCS piping and components are given in Section 3.2.

9.2.2 Essential Raw Cooling Water (ERCW)

9.2.2.1 Design Bases

The ERCW System is designed to supply cooling water to various heat loads in both the primary and secondary portions of each unit. Provisions are made to ensure a continuously available flow of cooling water to those systems and components necessary for plant safety during either

normal operation or under accident conditions. Sufficient redundancy of piping and components is provided to ensure that cooling is maintained to vital loads at all times.

9.2.2.2 System Description

Prior to initial fuel loading of unit 2, a separate ERCW pumping station housing pumps for the ERCW System was constructed and placed into operation. The new ERCW station draws water directly from the river, thereby eliminating any dependence upon the CCW pumping station fore bay, the former ERCW pumps located in the CCW pumping station or the entire AERCW System which has been abandoned. The ERCW headers in the old pumping station can be utilized as a system cross-tie.

The ERCW System consists of eight ERCW pumps, four traveling water screens, four screen wash pumps, and four strainers located with the ERCW pumping station, and associated piping and valves as shown in Figures 9.2.2-1 through 9.2.2-5. The design data for all pumps required for the system operation is shown in Table 9.2.2-1. Pump logic is shown in Figure 9.2.2-6.

The eight ERCW pumps are mounted on the ERCW pumping station deck at elevation 720.0 and are protected by external walls from the effects of probable maximum flood plus wave run up to elevation 726.8. (The 1998 reanalysis determined that the new probable maximum flood elevation plus wave runup is 723.8. See Section 2.4.3.)

The ERCW system is designed to supply water to the following essential components:

1. Component cooling heat exchangers
2. Containment spray heat exchangers
3. Emergency diesel generators
4. Emergency makeup for steam generators via the Auxiliary Feedwater System
5. Emergency makeup for Component Cooling System
6. Control Building Air-Conditioning Systems
7. Auxiliary Building space coolers (for safeguard equipment)
8. Containment Ventilation System coolers
9. Auxiliary control air compressors
10. Reactor coolant pump motor coolers
11. Control rod drive ventilation coolers
12. Spent fuel pit heat exchangers*
13. Sample heat exchangers*
14. Reactor coolant pump thermal barriers*
15. Ice machine refrigeration condensers*
16. Residual heat removal heat exchangers*
17. Station air compressors (alternate supply)

*Provided with ERCW only during Stage II Flood Mode alignment.

The CCS heat exchangers and the other components are shown on the ERCW System flow diagram (Figures 9.2.2-1 through 9.2.2-5).

Typically only loads on the system during normal operations include the component cooling heat exchangers, centrifugal charging pump gear and oil coolers, RCP motor coolers, control rod drive ventilation coolers, the Air-Conditioning and Ventilation Systems (including the upper and lower containment coolers, various room and area coolers, and the instrument room coolers water chiller units), and the auxiliary control air compressors. Additional loads may be imposed during surveillance and test conditions. The ERCW System also acts as an alternate source for water supplied to the Auxiliary Feedwater System pump suction and the station air compressors.

The ERCW pumping station is located within the plant intake skimmer structure, and has direct communication with the main river channel for all reservoir levels including loss of downstream dam. The ERCW station and all equipment therein remain operable during the probable maximum flood. The system has the ability to remain operational during flood and loss of downstream dam. The normal minimum reservoir elevation is 675'. The ERCW system shall operate and deliver its rated flow when the reservoir is at the minimum design elevation of 639'. Section 2.4.11 discusses low water considerations. Section 2.4.A discusses the flood protection plan. Section 2.4.11.5.1 discusses two-unit operation.

The ERCW supply temperature maximum is 87°F.

Supply water for the ERCW pumps enters the pumping station through each of four traveling water screens directly into a corresponding ERCW pump pit from which two ERCW pumps take suction.

Water is supplied to the auxiliary building from the ERCW pumping station through four independent sectionalized supply headers designated as 1A, 2A, 1B, and 2B. Four ERCW pumps are assigned to train A, and four to train B. The two headers associated with the same train (i.e., 1A/2A or 1B/2B) are cross-tied upstream of the Auxiliary Building to provide greater flexibility. This allows one supply header to be out of service (e.g., strainer maintenance), subject to ultimate heat sink limitation. The two 6" ERCW ESF headers and also the two 24" main supply headers associated with the same train (i.e., 1A/2A or 1B/2B) are cross-tied in the Auxiliary Building. All of the crossties may be in or out of service with no restrictions. These crossties exist to facilitate maintenance and modification activities and improve system hydraulic performance. Isolation of segments of the ERCW system may be performed in unit outages or with both units online subject to various restrictions on the ultimate heat sink temperature.

The following list identifies the component configuration required to meet the Design Function of a single ERCW Loop with one operating ERCW pump:

For Unit 1 Train A One Pump Operation:

ERCW flow is isolated to the following components:

- 2A-A Diesel Generator Heat Exchangers;
- Unit 2 Containment Spray Heat Exchanger 2A;
- Unit 2 TDAFW Pump from the "2A" ERCW Main Supply Header;
- Lower Containment Vent Cooler 2A, Control Rod Drive Vent Cooler 2A, and Reactor Coolant Pump 2-1 Motor Cooler;
- Lower Containment Vent Cooler 2C, Control Rod Drive Vent Cooler 2C, and Reactor Coolant Pump 2-3 Motor Cooler;
- Upper Containment Vent Cooler 2A;
- Upper Containment Vent Cooler 2C; and
- Incore Instrumentation Room Water Coolers 2A.

The following components are in service:

- Train A ERCW yard header crosstie;
- Train A ERCW 16-inch Auxiliary Building header crosstie; and
- Train A ERCW 6-inch Engineered Safety Features (ESF) header crosstie.

For Unit 1 Train B One Pump Operation:

ERCW flow is isolated to the following components:

- 2B-B Diesel Generator Heat Exchangers;
- Unit 2 Containment Spray Heat Exchanger 2B;
- Unit 2 TDAFW Pump from the "2B" ERCW Main Supply Header;
- Lower Containment Ventilation Cooler 2B, Control Rod Drive Vent Cooler 2B, and Reactor Coolant Pump 2-2 Motor Cooler;
- Lower Containment Ventilation Coolers 2D, Control Rod Drive Vent Cooler 2D, and Reactor Coolant Pump 2-4 Motor Cooler;
- Upper Containment Ventilation Coolers 2B;
- Upper Containment Ventilation Coolers 2D;
- Incore Instrumentation Room Water Coolers 2B;
- ERCW flow to the 1B Control Rod Drive Vent Cooler.

The following components are in service:

- Train B ERCW yard header crosstie;
- Train B ERCW 16-inch Auxiliary Building header crosstie;
- Train B ERCW 6-inch Engineered Safety Features (ESF) header crossties.

For Unit 2 Train A One Pump Operation:

ERCW flow is isolated to the following components:

- 1A-A Diesel Generator Heat Exchangers;
- Unit 1 Containment Spray Heat Exchanger 1A;
- Unit 1 TDAFW Pump from the "1A" ERCW Main Supply Header;
- Lower Containment Vent Cooler 1A, Control Rod Drive Vent Cooler 1A, and Reactor Coolant Pump 1-1 Motor Cooler;
- Lower Containment Vent Cooler 1C, Control Rod Drive Vent Cooler 1C, and Reactor Coolant Pump 1-3 Motor Cooler;
- Incore Instrumentation Room Water Coolers 1A.

The following components are in service:

- Train A ERCW yard header crosstie;
- Train A ERCW 16-inch Auxiliary Building header crosstie; and
- Train A ERCW 6-inch Engineered Safety Features (ESF) header crosstie.

For Unit 2 Train B One Pump Operation:

ERCW flow is isolated to the following components:

- 1B-B Diesel Generator Heat Exchangers;
- Unit 1 Containment Spray Heat Exchanger 1B;
- Unit 1 TDAFW Pump from the "1B" ERCW Main Supply Header;
- Lower Containment Ventilation Cooler 1B, Control Rod Drive Vent Cooler 1B, and Reactor Coolant Pump 1-2 Motor Cooler;
- Lower Containment Ventilation Coolers 1D, Control Rod Drive Vent Cooler 1D, and Reactor Coolant Pump 1-4 Motor Cooler;
- Incore Instrumentation Room Water Coolers 1B.

The following components are in service:

- Train B ERCW yard header crosstie;
- Train B ERCW 16-inch Auxiliary Building header crosstie;
- Train B ERCW 6-inch Engineered Safety Features (ESF) header crossties.

During all conditions of operation, the discharge from the various heat exchangers served by the ERCW System will go to a seismically-qualified open basin with overflow capability and then flow by gravity to the return channel of the natural draft Cooling Towers of the CCW System.

The ERCW System piping is arranged in four headers (1A, 1B, 2A, and 2B) each serving certain components in each unit as follows: Note that use of the crossties described above may modify some of these descriptions.

1. Each header supplies ERCW to one of the two containment spray heat exchangers associated with each unit.

2. The primary cooling source for each of the diesel generator heat exchangers is from the Unit 1 headers. Each diesel also has an alternate supply from the unit 2 headers of the opposite train.

3. The normal cooling water supply to CCS heat exchangers 1A1 and 1A2, 2A1 and 2A2, and 0B1 and 0B2, is from ERCW headers 2A, 2A, and 2B, respectively.

4. Each A and B supply header in each unit header provides a backup source of feedwater for the turbine-driven auxiliary feed pumps in the respective unit.

5. Each of the two discharge headers provides a backup source of feedwater for the motor-driven auxiliary feedwater pumps in each unit.

6. Headers 1A and 1B provide ERCW cooling water to the Control Room and Control Building Electrical Board Room Air-condition Systems.

7. Each A and B header in each unit supplies ERCW cooling water to the Auxiliary Building ventilation coolers for safeguard equipment, the containment ventilation system coolers, the RCP motor coolers, the control rod drive vent coolers, and the containment instrument room cooler's water chillers in the respective unit.

8. Headers 1A and/or 1B provide an alternate source of cooling water for the station air compressors.

9. Headers 1A and 2B provide ERCW cooling water for the shutdown board room air-conditioners and auxiliary control air compressors.

10. Headers 2A and 2B provide ERCW cooling water for the emergency gas treatment room coolers and boric acid transfer and unit 2 auxiliary feedwater pump space coolers.

11. Headers 1A and 1B provide ERCW cooling water for the Component Cooling System pumps and Unit 1 auxiliary feedwater pump space coolers.

12. Under flood conditions, each header would provide water to the spent fuel pit heat exchangers, reactor coolant pump thermal barriers, ice machine refrigeration condensers, and sample heat exchangers, and the residual heat removal heat exchangers as needed.

The headers are arranged and fitted with isolation valves such that a rupture in any header can be isolated and will not jeopardize the safety functions of the other headers. The operation of two pumps on one plant train is sufficient to supply all cooling water requirements for the 2-unit plant for unit cooldown, refueling, or post-accident operation. However, additional pumps may be started, if available, for unit cooldown or refueling. Two pumps per train operate during the hypothetical, combined accident and loss of normal power if each diesel generator is in operation. In an accident the safety injection signal automatically starts two pumps on each train, thus providing full redundancy. Such an arrangement would assure adequate cooling water under both normal and emergency conditions. During single unit outages, one pump on each ERCW train can supply sufficient cooling water, subject to restrictions on the ultimate heat sink supply temperature.

The ERCW System design basis is for operation under the worst initial condition of operation. This condition is assumed to be the low probability combination of a design basis earthquake coincident with a loss-of-coolant accident in one unit, abrupt loss of the downstream dam, loss of emergency power train, shutdown of the other unit in hot standby and loss of all offsite power.

The ERCW pumps, their traveling water screens, screen wash pumps, and strainers are protected against the probable maximum flood level. The deck elevation 720 is above the probable maximum flood still water elevation of 719.6 and below the elevation including wave runup of 723.8, but it is protected from flooding by the outside walls. The traveling screen wells extend above the deck elevation and above the design basis surge level. The wall penetration for normal water drainage from the deck is below the design basis flood elevation, but it is designed for sealing in the event of a flood. All other exterior penetrations of the station below the probable maximum flood are permanently sealed. Redundant pumps are provided on the deck and in the interior rooms to remove rainfall on the deck and water seepage. All pump motors, screen motors, screen wash pump motors, sump pumps, and backwashing strainer motors are supplied with power from normal and emergency sources, thereby ensuring a continuous flow of cooling water under all conditions.

Since there are two independent power trains, four of the eight ERCW pumps will be assigned to train A (1A/2A) and four to train B (1B/2B). Likewise, two of the associated ERCW MCCs are assigned to train A and two to train B. Because the mechanical loads powered from each power train feed into a header/piping system that is shared among both units, there is no need to have unit separation on the associated power sources. The normal and alternate power source for each ERCW MCC are provided by the same train from each unit. Two each of the traveling screens, screen wash pumps, and strainers will be assigned to the power train corresponding to that of the ERCW pumps which this equipment serves.

9.2.2.3 Safety Evaluation

The ERCW is a two-train system, each train having the capability to provide the maximum required cooling water requirement for both units under any credible plant condition. These equipment trains are sufficiently independent to guarantee the availability of at least one train at any time. The system has been analyzed for "worst case" heat loads under combinations of maximum river water temperature, design basis accident conditions, normal cooldown requirements, power train failures, etc., for both units. It is found through these analyses that sharing of this system by the two nuclear units does not introduce factors that prevent the system from performing its required function for plant design basis condition. Sufficient pump capacity is included to provide design cooling water flows under all conditions and the system is arranged in such a way that even loss of a complete header or one supply source can be isolated in a manner that does not jeopardize plant safety.

The ERCW System has eight pumps (four pumps per train). However, minimum combined safety requirements for one "accident" unit and one "non-accident" unit, or two "non-accident" units, are met by only two pumps on one plant train. The A and B ERCW headers each have two pumps that are assigned to an emergency diesel generator on loss of offsite power. Total loss of one train, or the loss of an entire plant emergency power train will not prevent safe shutdown of either unit under any credible plant condition. Thus, sharing of the ERCW does not compromise safety relative to that of a unitized system.

The only single component carrying loads from two units is the CCS heat exchanger pair OB1/OB2 which serves the Train B safeguards (i.e., engineered safety features equipment) for both units. Should a single failure of this heat exchanger pair or connecting pipe result in the loss of both the B safeguard trains, the A safeguard trains are capable of unit cooldown independent of the B trains. In all other places where a single failure could affect both units, the other train will remain fully functional and is capable of supporting unit cooldown independent of the failed train.

Under extreme flood conditions, the ERCW System provides a heat sink for all closed cycle cooling systems required for this particular condition. The system is designed to continue operation during the post-flood condition in which the loss of the downstream dam has also been assumed.

The system is designed to furnish a continuous supply of cooling water under normal conditions, as well as under the following extreme circumstances:

1. Tornado or other violent weather conditions which might disrupt normal offsite power. The ERCW pumps are shielded from tornadic winds and missiles by the surrounding structure and have alternate feeds from the diesel generators which are housed in a structure also designed for these conditions. In addition, the pumps on power Train A are separated from those on Train B by walls on the pumping station deck.

2. Earthquake with or without failure of main river dams above and below the site. Safe shutdown is assured by designing the ERCW pumping station, ERCW pumps, ERCW station traveling screens and screen wash pumps, and associated piping and structures to Class I seismic requirements. The ERCW pumping station is designed and located so as to maintain direct communication with the main river channel at minimum possible water level resulting from loss of the dams.

   A pipe rupture in the non-seismically qualified ERCW piping located in the turbine building is of no consequence because the ERCW piping is normally isolated.

3. Probable Maximum Flood with the coincident or subsequent loss of the upstream and/or downstream dams. To meet this condition the ERCW pumps, traveling screens, and screen wash pumps are protected from the probable maximum flood by the ERCW pumping station. The 27-hour flood warning period provides a more than adequate time period for cooling water system alignment, even assuming an initial difficulty in opening one of the non-redundant, manually-operated, butterfly valves. The construction of these valves is such that a failure which could preclude manual operation is extremely unlikely. However, if this did happen, the valve installation is such that rapid replacement (within a few hours) or repair can be accomplished with a minimum of manpower and equipment. Once cooling flow is established and adjusted, operation of any non-redundant valve is not required. During flood mode operation, all active components of the ERCW supply are redundant, and can therefore tolerate a single failure in the short or long term. A passive failure, consistent with the 50 gal/min loss rate specified in FSAR subsection 3.1.1, can be tolerated for an indefinite period without interrupting the required flow. The ERCW System would not furnish feedwater to the steam generators during the probable maximum flood. This would be provided by the Fire Protection System (subsection 9.5.1), by the method described in subsection 2.4A.2.2. During flood mode operations a single line, conforming to the single failure criteria outlined in FSAR Section 3.1.1, supplies cooling water to the spent fuel pit heat exchangers.

The availability of water for the most demanding condition on the ERCW System is based on the following events occurring simultaneously:

1. Loss of offsite power
2. Loss of downstream dam
3. Loss of two diesel generator units serving the same power train.
4. Design basis earthquake

Diesel generators are used to supply power for the pumps and valves in case of loss of offsite power. The loss of two diesel generators means that cooling water must be supplied with two ERCW pumps operating through two headers on the same plant train. Under all plant conditions, the yard header cross-tie in the CCW Pumping Station may remain open. Within limitations based on the ultimate heat sink temperature, an ERCW train may remain operable with a strainer isolated for maintenance by use of this cross-tie. The two 6” ERCW ESF headers and also the two 24” main supply headers associated with the same train (i.e., 1A/2A) are also cross-tied in the Auxiliary Building. These crossties may be in or out of service with no restrictions. These cross-ties exist to facilitate maintenance and modification activities.

Certain combined modes of operation under the above circumstances are not within the design capability of the ERCW System. The modes that cannot be adequately supplied are simultaneously shutdown/cooldown of both units or one unit in shutdown/cooldown and the

other in a LOCA. In each of these situations a unit that is not in an accident mode can be maintained at hot standby, if necessary, until heat loads are low enough or if already shutdown, maintained in safe shutdown or allowed to return to hot standby depending on the heat load. The design maximum heat load rejected to the ERCW System occurs with one unit in an accident mode and the other hot standby. The availability of adequate ERCW flow to remove the maximum heat loads is periodically verified. If 2-unit shutdown is required, the cooldown time will be extended. A malfunction analysis for the ERCW System is presented in Table 9.2.2-2.

9.2.2.4 Incident Control

In order to preclude leakage of radioactivity from the containment, all supply lines to the containment are provided with double isolation by use of a check valve and motor-operated valve or two motor-operated valves on separate power trains. The discharge lines are double protected by use of two motor-operated valves operated on separate power trains.

Radiation detectors are installed in each discharge header at a point downstream of the last equipment discharge point and just prior to exit from the Auxiliary Building.

9.2.2.5 Instrument Applications

9.2.2.5.1 General Description

ERCW instrumentation and controls for equipment supplied for a particular ERCW main supply header are powered from the same electrical power source as the pumps which normally supply the water to that header. Therefore, loss of one power train would result in the loss of only the instrumentation and controls associated with one ERCW header. Motor operated containment isolation valves are arranged and powered such that isolation may be accomplished utilizing either one of the available power trains. The safety related display instrumentation for Post Accident Monitoring is discussed in Section 7.5. Auxiliary controls (see Section 7.4) are provided for all devices which are required for operation in the event of a Main Control Room evacuation.

9.2.2.5.2 Pressure Instrumentation

Pressure transmitters are provided on each ERCW pump discharge line and main supply header for displaying pressures locally and in the main control room, as well as actuating main control room annunciators for high and low pressure conditions. The screen wash pumps of the ERCW pumping station are manually operated during normal and accident conditions. The screen wash pumps and traveling screens of the ERCW are also exercised at regular intervals to maintain functionality and cleanliness. Screen wash pump discharge pressure switches are utilized to start the traveling screen motor when screen wash pressure has been established. Pressure and differential pressure indicators are provided for each ERCW strainer to locally monitor strainer pressure. Backwashing of the ERCW strainers during normal and accident conditions is performed manually. Local pressure test points are provided on the ERCW inlet and outlet of each air conditioner condensing unit.

9.2.2.5.3 Flow Instrumentation

Flow elements and transmitters are provided for each ERCW main supply header to display the flow rates. The ERCW flow rate through each containment spray exchanger is displayed in the

MCR. The ERCW flow rate through each CCS HTX pair can be determined from flow indicators displayed in the MCR. Local flow indicators are provided for the flow rate through the emergency diesel engine heat exchangers, each lower containment cooling header, and each upper containment ventilation cooler. Flow elements are provided in the discharge lines of all other coolers and heat exchangers for use during testing and system balancing.

9.2.2.5.4 Temperature Instrumentation

Two of four ERCW supply header temperatures are input to the plant computer, which is available in the main control room. Local temperature indicators are provided for the discharge from each emergency diesel engine heat exchanger and all air conditioner condensing units. Temperature test wells are provided on the inlet of each air conditioner condensing unit and the discharge side of each pump motor cooler, and control rod drive cooler. Temperature test wells are also provided in the inlet and discharge lines for all space coolers, room coolers, and upper and lower containment ventilation coolers, and in the main supply and return header.

9.2.2.5.5 Control Valves

All active ERCW air-operated and motor-operated valves whose positions are required to be known by the MCR operators have their open and closed positions displayed in the Main Control Room and/or Auxiliary Control Stations by means of lights incorporated either on the controlling hand switch, a valve status light subpanel, or motor control center. The position of motor-operated valves depowered for Appendix R are indicated by a rotating mimic position symbol. All air operated temperature and flow control valves are designed to fail open on loss of electrical power and/or operating air, thereby providing maximum ERCW cooling flow to the equipment being supplied.

ERCW is supplied to each upper and lower containment ventilation cooler. A throttle action type valve controlled by a non-safety related temperature indicating controller or manual valves are provided for controlling the flow through the associated cooling coils. Manual safety-related overrides to fail open the lower containment ventilation cooler valves are provided by means of hand switches in the Auxiliary Control Room and MCR.

ERCW is supplied to each control rod drive ventilation cooler. A throttle action type valve controlled by a temperature indicating controller is provided for the control rod drive ventilation cooler. Manual and/or automatic override to fully close the control valve is provided by means of a hand switch and/or logic signal.

ERCW is supplied to each air conditioner condensing unit through an automatic water regulating valve controlled by cooling coil pressure. ERCW is supplied to each additional cooler or heat exchanger through an on-off action type valve controlled by either a hand switch, a temperature switch, a manual valve, a logic signal, or various combinations of these.

9.2.2.6 Corrosion, Organic Fouling, and Environmental Qualification

TVA has determined that long-term operation of the plant could result in unacceptably high amounts of internal corrosion in carbon steel piping. This could have a severely detrimental effect on the ability of the system to supply adequate cooling water to all of the essential loads required for accident initiation. This problem has been resolved by implementing a periodic

surveillance test program to measure flows and by changing from carbon steel to stainless steel pipe as required to maintain adequate flow.

Control of organic fouling is provided by use of strainers in the supply headers and biocide treatments. Asiatic clams will be controlled by a combination of straining and biocide treatments. Microbiologically induced corrosion (MIC) will be controlled by injecting biocide.

Each supply header section (1A, 2A, etc.) is provided with a strainer (manual continuous backwash type) capable of removing particles and organic matter larger than 1/32-inch diameter. These strainers are located in the ERCW pumping station downstream of the ERCW pumps.

All pumps and valves exposed to atmospheric conditions are designed to operate under the most extreme climatic conditions of temperature, humidity, wind velocity, etc., that are expected to prevail in the southeastern United States.

9.2.2.7 Tests and Inspections

The completed piping system was hydrostatically tested prior to station startup. Components are designed for inservice inspection and testing in accordance with ASME B&PV Code, Section XI, Rules for Inservice Inspection of Nuclear Power Plant Components. All components, switchovers, starting controls, and the integral systems are tested periodically.

In accordance with Generic Letter 89-13, a continuing program will be maintained to perform periodic inspections of the ERCW intake structure for biological fouling mechanisms, sediment and corrosion. In addition, a continuing test/inspection program will be maintained to verify the heat transfer capability of all safety-related heat exchangers included in the GL 89-13 program.

9.2.2.8 Design Codes

The design codes for the ERCW piping, and components are given in Section 3.2.

9.2.3 Demineralized Water Makeup System

The Demineralized Water Makeup System is a non-safety related shared system serving both units.

9.2.3.1 Design Bases

The system is designed to supply the requirements for high purity water for makeup to the steam generators, the Primary Water System, and the Demineralized Water System for cask decontamination, cleaning, flushing, and makeup for miscellaneous services.

9.2.3.2 System Description

The system consists of two separate water treatment facilities and a demineralized water storage and distribution system. The original water treatment facility is housed within the turbine building and a newer water treatment facility is housed within a separate building located in the yard. The new facility has the capability to be supplied from a vendor.

Flow diagrams are shown in Figures 9.2.3-1 and 9.2.3-2.

1. Demineralized Water System - Turbine Building

   The demineralized water system located in the Turbine Building is no longer used as a means of high quality clarified water.

2. Demineralized Water Makeup System - Yard - South of Powerhouse

   The demineralized water makeup system outside of the Turbine Building is primarily housed in a single structure. It consists of a vendor system which supplies the TVA demineralized water storage and distribution system.

3. Demineralized Water Storage and Distribution System

   The demineralized water storage and distribution system is supplied by the demineralized water makeup systems located in the yard south of the powerhouse. It consists of a 10,000 gallon demineralized water tank (DI Head Tank), a 500,000 gallon demineralized water storage tank (DWST), a 15,000 gallon cask decontamination tank, main piping loop, pumps, and headers and valves. The loop supplies water for various services. The service includes supplying water to emergency showers, eye wash stations, laboratory sinks, cask wash down room, fuel transfer canals, and various tanks and equipment.

   The main piping loop is supplied from the demineralizer storage tank (DI Head Tank). Makeup water for the condensate storage tanks is supplied from the demineralized water makeup system located in the yard south of the powerhouse. Washdown water for the cask washdown room is supplied from the cask decontamination tank. Makeup for the primary water storage tank is supplied directly from the loop.

   Storage tanks and system principal piping material are aluminum except piping inside reactor containment which is stainless steel. The piping is TVA Class G or H except the reactor containment isolation valves and connecting piping which are TVA Class B.

9.2.3.3 Safety Evaluation

The Demineralized Water Makeup Systems are not required for maintenance of plant safety in the event of an accident and is not a part of the Engineered Safety Systems; therefore, the reactor containment isolation valves and the piping connecting the valves are the only portions of these systems which have a Nuclear Safety Class designation in accordance with TVA Classification B. There are no safety related implications due to sharing these systems between the two units.

All pipe hangers and supports in the Control Building, Auxiliary Building, and Reactor Buildings are designed for seismic loading to prevent damage to adjacent safety-related equipment necessary for the safe shutdown of the plant in case of a nuclear accident.

9.2.3.4 Test and Inspection

Prior to startup all piping and equipment was tested. After startup routine visual inspection of the system components and instrumentation is adequate to verify system operability.

9.2.3.5 Instrumentation Applications

Instrumentation is provided for the new treatment plant operation and to maintain storage tank levels.

High and low water levels in both the demineralized water (DI Head Tank) and cask decontamination tanks are alarmed in the Main Control Room.

9.2.4 Potable and Sanitary Water Systems

9.2.4.1 Potable Water System

9.2.4.1.1 Design Bases

The purpose of this system is to furnish potable water to all potable water usage points.

The initial quantity of potable water required was approximately 20,000 gallons to fill two-10,000 gallon storage tanks in the Turbine Building and the system piping. The average daily requirement varies according to plant operation and fluctuations in the plant personnel population. The potable water supply source is a local public utility district. This arrangement accommodates a wide fluctuation in the daily usage of potable water.

9.2.4.1.2 System Description

TVA has contracted with the Hixson Utility District to supply potable water to the Sequoyah Nuclear Plant. This utility district water system is classified as an approved system by the Tennessee Department of Public Health and Environment.

Static pressure at the plant site is reduced before distribution and is further reduced at several points in the system. The potable water supply flows by utility pressure to the two-10,000 gallon storage tanks in the Turbine Building. The Yard Distribution System conveys potable water to the various buildings and to other points of usage.

Most fixtures are supplied from a return line from the storage tanks to prevent depleting the chloride residual in the tanks. Other fixtures which are remote from the return line are supplied by the supply line to the storage tanks.

There are no potable water lines in the Reactor Building.

9.2.4.1.3 Safety Evaluation

To insure against plant contamination of the Hixson Utility District, a backflow prevention valve is installed at the point where the Sequoyah Potable Water System connects with the Hixson Utility District. Backflow preventers are also installed at various points in the plant system as required. Potable water lines are sterilized before use.

Potable water lines that extend into the Auxiliary Building to serve the battery rooms have shutoff valves in the Control Building. These lines are run under the control room area to prevent damage in case of a ruptured line.

The radiochemical laboratory, the hot instrument shop, and the titration room sinks in the Auxiliary Building are supplied potable water from a valved connection in the Service Building.

Potable water fixtures in the Control Building are supplied potable water from a valved connection in the Turbine Building.

There are no safety-related implications due to sharing this system between the two units.

9.2.4.1.4 Tests and Inspections

All Potable Water Systems are initially pressure tested. Routine maintenance is provided as needed. Where piping is in walls, the tests are made prior to erection of masonry walls. Fixtures are accessible for inspection during normal operation.

9.2.4.1.5 Instrumentation Applications

Water supply flow to the two potable water storage tanks is controlled by a flow control valve located near the tanks and actuated by level switches. Level control switches on one tank actuate an alarm in the turbine building on high and low level in the tanks.

9.2.4.2 Sanitary Water System

9.2.4.2.1 Design Bases

The maximum quantity of sanitary water to be handled, treated and disposed of, or pumped offsite is approximately 70,000 gallons per day.

The Sanitary Water Treatment System is an aerobic treatment system. Sewage collected onsite can be pumped offsite to the Soddy-Daisy regional or Moccasin Bend sewage treatment systems.

System design and construction meets the requirements of the Tennessee Department of Health and Environment.

9.2.4.2.2 System Description

Sewage is processed by:

a) septic tank / drain fields
b) septic tank / evapotranspiration fields
c) the Soddy-Daisy sewage treatment facility
d) the Moccasin Bend sewage treatment facility, and
e) the existing SQN sewage treatment facility.

Sewage to be sent offsite to the Soddy-Daisy or Moccasin Bend treatment facilities is monitored for radioactivity. Should abnormal levels of radioactivity occur this sewage will be processed through the existing onsite treatment facility.

9.2.4.2.3 Safety Evaluation

Containment is provided on the sanitary water drain between the Auxiliary Building and the Control Building by means of a running trap inside the Auxiliary Building. Potable water drips in the trap to keep it full at all times. A needle valve is used to control the flow of water. All plumbing fixtures and water coolers are installed with a trap in the drain line or an integral part of the fixture when connected to sanitary drains.

These traps prevent fumes, odors, or gases from coming back through the fixtures.

9.2.4.2.4 Tests and Inspection

All embedded lines and fittings were tested for leaks while still exposed.

The sanitary water system has no physical connections with any radwaste systems; however, the raw sanitary water discharge from the various site facilities is periodically sampled at selected points and tested for the presence of potential radiological contamination. Sampling frequency and sampling/testing methods are established in accordance with approved plant procedures. The results of these tests are reported periodically to the cognizant regulatory agencies.

9.2.4.2.5 Instrumentation Applications

Level switches are provided at pumping stations for control of pumps and alarms.

9.2.5 Ultimate Heat Sink

The ultimate heat sink (subsequently referred to as "sink") for a nuclear plant is that complex of water sources and associated retaining structures used to remove waste heat from the plant. The sink used in the initial operation of Sequoyah Nuclear Plant was modified early in plant life when a new, independent Essential Raw Cooling Water (ERCW) pumping station was made effective (for details see Section 9.2.2). Throughout the plant's life, the sink is designed to perform two principal safety functions: (1) dissipation of residual and auxiliary heat after reactor shutdown, and (2) dissipation of residual and auxiliary heat after an accident.

9.2.5.1 Design Basis

The sink was designed to comply with the regulatory position in NRC Regulatory Guide 1.27 Revision 0, dated March 23, 1972, and stated below:

1. The ultimate heat sink[1] should be capable of providing sufficient cooling for at least 30 days (a) to permit simultaneous safe shutdown and cooldown of all nuclear reactor units that it serves, and maintain them in a safe shutdown condition, and (b) in the event of an accident

in one unit, to permit control of that accident safely and permit simultaneous safe shutdown and cooldown of the remaining units and maintain them in a safe shutdown condition. Procedures for assuring a continued capability after 30 days should be available.

[1]The ultimate heat sink is that complex of water sources, including associated retaining structures, and any canals or conduits connecting the source with, but not including, the intake structures of nuclear reactor units. If cooling towers or portions thereof are required to accomplish the sink safety functions, they should satisfy the same design requirements as the sink.

2. The ultimate heat sink should be capable of withstanding the effects of the most severe natural phenomena associated with this location, other applicable site related events, reasonably probable combinations of less severe phenomena or events where this is appropriate to provide a consistent level of conservatism, and a single failure of man-made structural features without loss of the capability specified in regulatory position 1 above.

3. The ultimate heat sink should consist of at least two sources of water, including their retaining structures, each with the capability to perform the safety function specified in regulatory position 1 above unless it can be demonstrated that there is an extremely low probability of losing the capability of a single source. There should be at least two canals or conduits connecting the source(s) with the intake structures of the nuclear power units, unless it can be demonstrated that there is extremely low probability that a single canal can fail entirely from natural phenomena. All water sources and their associated canals or conduits should be highly reliable and should be separated and protected such that failure of any one will not induce failure of any other.

4. The technical specifications for the plant should include actions to be taken in the event that conditions threaten partial loss of the capability of the ultimate heat sink or if it temporarily does not satisfy regulatory positions (1) and (3) above during operation.

9.2.5.2 Safety Evaluation

This safety evaluation, is sectionalized to correspond with the points of the preceding regulatory position.

1. The cooling water requirements for the most demanding accident shutdown and cooldown of the plant's reactors are presented in subsection 9.2.2. The adequacy of the Tennessee River to provide this amount of water, and therefore to satisfy regulatory position (1) is confirmed in subsections 2.4.11.1 and 2.4.11.3.

2. Under the most adverse events expected at the site or a reasonable combination of less severe events and any single failure of a man-made feature, the sink is designed to retain its capability to perform the specified safety functions. The most severe natural phenomena (including flood, drought, tornado, wind, and earthquake) conceivable to occur at this site are thoroughly discussed in Chapter 2. The new ERCW pumping station provides ERCW for both normal and emergency plant conditions. With the new ERCW station in operation, the sink's safety functions are insured for all of the plant design basis events, including those extreme natural phenomenon credible to occur at this site.

As stated previously, the ERCW pumps are protected from the design basis flood including the effects of wind waves, and therefore they will be capable of functioning in all flood conditions up to and including the design basis flood (see subsection 9.2.2). The water intake to the ERCW pumping station and the area outside the station intake was dredged to form a channel that will provide free access to the river. This channel was dredged to a sufficient width eliminating the possibility of channel blockage due to an earth- or mud-slide. The channel will be monitored and dredged as required to maintain free access to the river. Therefore, adequate water will be available to the ERCW pumps at all times including the loss of downstream dam for any reason. The unlikely occurrence of the SSE could significantly affect the sink only by causing failure of the downstream dam and/or upstream dams. For the resulting low and/or high water event, water will be available to the intake at all times. A seismically induced disturbance of the rock surfaces could only block a small percentage of the intake channel due to its highly conservative width. Also, a tornado cannot interrupt the ERCW supply to the station.

For an evaluation of barge impact and explosion hazards see subsection 2.2.3.

TVA regulation of the Tennessee River is such that drought will not jeopardize the sink's capability required in regulatory position 1; this is historically confirmed by the data in subsection 2.4.11.3.

The sink is designed to withstand a 95 mph basic wind or the most severe tornado, including the associated missile spectrum, without loss of the capability to provide an adequate supply of cooling water to the Essential Raw Cooling Water System.

The most severe combination of events considered credible to the heat sink would be the simultaneous occurrence of the SSE, and loss of downstream dams with water temperature at 87°F. Under this extreme situation, the sink retains the capability of regulatory position (1). The sink provides water to the ERCW system as described in Section 9.2.2.

Refer to subsection 2.4.11.6 for additional discussion of the requirements for maintaining sink dependability.

3. The Tennessee River is the common supply for all plant cooling water requirements. Total interruption of this supply is incredible. Additionally, the integrity of the river's dams is not essential for safe reactor shutdown and cooldown.

4. The limiting conditions and surveillance requirements for the ERCW System are given in the SQN Technical Specifications. The limiting conditions for the plant's flood protection program are also given in the SQN Technical Requirements Manual.

9.2.6 Condensate Storage Facilities

9.2.6.1 Design Bases

The condensate storage facilities handle treated water and are designed to provide (1) water for initial charging of the secondary system, (2) makeup water when water treatment plant is being regenerated, or is out of service, (3) water to replace that lost from the system by safety valve or relief valve operation, and (4) an adequate quantity of water for emergency cooling (Auxiliary Feedwater System).

9.2.6.2 System Design Description

The condensate storage facility has two site fabricated condensate storage tanks ('A' and 'B') each with a minimum as-designed capacity of 385,000 gallons.

The condensate storage tanks are connected to the condenser hotwell and hotwell pumps discharge for the addition and dumping of water, respectively, to maintain water inventory in the secondary system. Storage tank level is maintained by makeup from water treatment plant.

The condensate storage tanks provide the primary source of water for the auxiliary feedwater pumps. A minimum usable level of 240,000 gallons is required per the technical specifications for an operable tank (see Section 10.4.7.2).

The condensate storage tanks are made from ASTM A 283 carbon steel plate with inside coating of epoxy-phenolic resin to prevent corrosion. Connections are available on the storage tanks and in the condensate system for introducing low-pressure nitrogen into the tanks for purging the tanks of air (i.e. oxygen). The tanks are constructed to AWWA Standard D100 for steel tanks. Pressure relief and vacuum venting is provided.

9.2.6.3 Safety Evaluation

The condensate storage tanks are the primary source of clean water supply for the auxiliary feedwater pumps, and a storage reservoir for secondary system water. The tanks are nonsafety class tanks.

Two additional sources of water supply are provided for the Auxiliary Feedwater System. Interconnections with the ERCW (safety class 2b) are made in the AFW suction piping to the pumps, and fire protection (nonsafety class) provides a direct source to the steam generators for flood mode operation. Safety is the principal consideration whereas the cleanliness of the steam generator is of secondary importance.

Protection for the Condensate Storage Tanks from tornado wind driven missiles is provided to the extent described in Subsection 3.5.2.22. There is no physical separation barrier between the tanks. The AFW suction piping originates inside each tank and then continues into the Turbine Building in a pipe trench covered with removable steel covers. The piping from the tanks and in the Turbine Building are seismically qualified to the requirements of Design Criteria SQN-DC-V-48.0. The water in this tank is not normally radioactive. However, in the event of a steam generator tube leak, this tank will become radioactive by way of the condensate system. The maximum level of contamination in the condensate storage tank would be comparable to that of the main condenser (Subsection 10.4.1).

A tank rupture would allow the water to be drained to the turbine building sump or to the river by way of the holding pond. The radiological consequences of this are less than other postulated accidents discussed in Chapter 15. The tanks are located in the plant yard adjacent to the south wall of the turbine building. Ice formation in the tanks can be prevented, if necessary, by recirculation of water through the condensate transfer pumps. Tank instrumentation is insulated and heat traced for freeze protection.

Tank repairs necessitated by damage or leaks can be made after closing the defective tanks isolation valves in the interconnecting headers, and transferring water from the defective tank to the other storage tank using the condensate transfer pumps. Excess water can be drained to waste through normally locked tank drain valves to the yard drainage system.

9.2.6.4 Tests and Inspections

The condensate storage tanks are tested during the pre-operational test program for both the condensate system and the Auxiliary Feedwater System.

9.2.6.5 Instrument Applications

The level of each storage tank is indicated on Units 1 and 2 main control boards and on a local panel in the area of the transfer pumps. These level signals are received from electronic level transmitters which also provide the signals for the annunciation in the main control room of an abnormal tank water level. Each tank is equipped with side-mounted displacement type level switches which provide a signal for annunciation in the main control room. The set point for these switches will be set outside the high and low set points of the electronic level switch and will be used as a backup for them. Continuous tank level indication is provided locally at each tank.

9.2.7 Raw Cooling Water System

The Raw Cooling Water System is a shared system serving both units. See Table 9.2.7-1 for pump design data.

9.2.7.1 Design Basis

1. The Raw Cooling Water System is capable of supplying the flow requirements of the equipment it serves during the full range of operation, at a maximum temperature of 84.5°F. The components listed in Section 9.2.7.2 may operate in reduced capacity at 87°F, if excess raw cooling water is not available.

2. The system will not function during maximum flood; therefore, provisions are made for a cross-connection to the ERCW System for cooling water to the package chillers in the Auxiliary Building if this condition occurs.

3. The system will not be available during a loss of offsite power condition.

4. All piping and valves of this system in Class I structures shall be seismically supported to the extent that they are prohibited from becoming missiles to equipment of other systems.

9.2.7.2 System Description

The Raw Cooling Water System, shown on Figures 9.2.7-1 through 9.2.7-4, furnishes cooling water to the following:

1. Turbine oil heat exchangers.
2. Generator stator heat exchangers.
3. Generator hydrogen heat exchangers.
4. Feedwater turbine heat exchangers.
5. Generator exciter heat exchangers.
6. Electrical bus heat exchangers.
7. Electrohydraulic control heat exchangers.
8. Vacuum priming pump seal water makeup.
9. Water treatment plant makeup.

10. Condenser vacuum pump heat exchangers.
11. Package chillers.
12. Hydrogen seal oil heat exchangers.
13. Injection water pumps.
14. Pumps and other miscellaneous equipment.
15. Station air compressors

The system consists of pumps, strainers, and associated valves and piping. The raw water strainers and pumps are located in the Turbine Building. River water from both condenser circulating water intake conduits is supplied to the strainers through a 36-inch manifold which is common to Units 1 and 2.

Units 1 and 2 have a common strainer manifold and pump suction manifold, with an isolation valve on the strainer supply manifold at each CCW conduit interface.

Control of organic fouling is provided by use of strainers in the supply header and biocide treatments. Asiatic clams and zebra mussels are controlled by a combination of straining and biocide treatment. Microbiologically induced corrosion (MIC) is controlled by injecting biocides.

All raw cooling water pumps discharge into a common loop header in the Turbine Building. Sectionalizing and isolating valves are provided in the loop header to allow for isolating segments of the system for maintenance without removing the system from service and to provide for increasing velocity and/or reversing flow to flush Asiatic clams and sediment from the headers. Flush lines are returned to the condenser circulating water discharge conduits.

Four strainers are provided for the two units. Three are required for the designed capacity, and one is a common spare. Five raw cooling water pumps are provided with one being a common spare. Peak summer river temperatures may require the operation of all the pumps and strainers. Isolation valves are located to permit maintenance at all pumps, strainers, and heat exchangers.

9.2.7.3 Safety Evaluation

The Raw Cooling Water System is not required for maintenance of plant safety in the event of an accident; therefore, there are no safety-related implications due to sharing this system between the two units.

9.2.7.4 Test and Inspections

All system piping and components are hydrostatically tested prior to station startup and are accessible for periodic inspection after startup.

9.2.7.5 Instrument and Controls

The strainers are monitored by a pressure differential switch which actuates an alarm locally and in the Main Control Room to indicate when the strainers need backwashing. The pressure differential is between the strainer inlet and outlet manifolds.

The pump suction header pressure is monitored by a pressure switch that operates a low pressure alarm in the Main Control Room, thus denoting impending pump cavitation.

The five pumps, including one spare, are common to both units and are designated A, B, C, D, and E. They can be controlled locally or from the main control room, the control room being the normal point of operation. Electrically the pumps are arranged for alternate usage and thus to equalize wear.

Pumps are put into operation as required to maintain discharge header pressure and one of the non-operating pumps may be selected for standby to start automatically when the discharge header pressure drops to a preset level.

Two of the cooling water control loops (turbine oil and generator hydrogen coolers) may be controlled from the main control room by temperature indicator controllers. These two control loops are contained within the plant Distributed Control System (DCS). These controls are needed during startup to change the viscosity of the turbine lubricating oil and to adjust the generator heat removal.

Temperature indicators and test wells are installed at the cooling water inlets and outlets of the various heat exchangers for operation and testing.

Flow meter orifice flanges are installed in the cooling water discharge supply to many of the heat exchangers for use in heat balance and performance tests.

9.2.8 References

1. Deleted

2. Deleted

3. Westinghouse letter to P. G. Trudel, Thermal Barrier Booster Pump Issue, TVA-93-023, (B38930211800) dated February 02, 1993.

4. TVA letter from P. G. Trudel to Westinghouse B. J. Garry dated May 14, 1992, Task N-035, (B38920514802).

5. WCAP-10772 CCP Alternate Mainflow Path, R. W. Fleming, January 1985, (B26890817305).

6. Westinghouse letter from B. J. Garry to TVA P. G. Trudel, TVA-92-040 dated March 17, 1992, (B38920324804).

7. Westinghouse letter TVA-7814 to TVA May 1980, CCP Operation following Secondary Side High Energy Line Rupture.

TABLE 9.2.1-1 (Sheet 1 of 2)

COMPONENT COOLING WATER SYSTEM COMPONENT DESIGN DATA
PER UNIT OF EQUIPMENT

Component Cooling Pumps	
Quanity	2 per unit, 1 shared
Type	Horizontal centrifugal
Rated capacity, gpm, each	6000
Rated head, ft H_2O	190
Motor horsepower, hp	350
Casing material	Cast steel
Design pressure, psig	150
Design temperature, °F	200
Thermal Barrier Booster Pumps	
Quantity	2 (per unit)
Type	Horizontal centrifugal
Rated capacity, gpm, each	160
Design head, ft H_2O	130
Motor horsepower, hp	15
Casing material	Cast steel
Design pressure, psig	200
Design temperature, °F	200
Surge Tank	
Number	1 (per unit)
Design pressure	
Internal, psig	25
External, psig	Vacuum breaker provided
Design temperature, °F	200
Total volume, gal	10,000
Normal water volume, gal	6,000
Fluid	Component cooling water
Material	Carbon steel

TABLE 9.2.1-1 (Sheet 2 of 2)
(Continued)

COMPONENT COOLING WATER SYSTEM COMPONENT DESIGN DATA
PER UNIT OF EQUIPMENT

Seal Leakage Collection Station	
Quantity	1 Unit (shared) w/2 pumps
Pump type	Regenerative turbine (horizontal)
Rated capacity, gpm, each	10.7
Rated head, ft H_2O	150
Motor horsepower, hp	2
Pump casing material	Cast-iron
Tank capacity, gal	180
Tank material	Carbon steel
Design pressure, psig	150
Design temperature, °F	200
Heat Exchangers	
Quantity	6 (3 pairs)
Type	Plate
Plate Material	SA 240-S32154
Gasket Material	Nitril
Design Pressure	160 psig
Design Temperature	200 °F

TABLE 9.2.1-2 (Sheet 1 of 2)

COMPONENT COOLING WATER SYSTEM MALFUNCTION ANALYSIS

Component	Malfunction	Comments and Consequences
1. Pump	Rupture of a pump casing	Isolate pump and start redundant pump. Minimum requirements need only 3 out of 5 pumps.
2. Pump	Pump fails to start	Start other pump. One pump will supply sufficient flow for one operating unit except for startup and shutdown. For these modes the SFP load must be transferred to the unit with two operating pumps. Two pumps are aligned with each unit.
3. Pump	Manual valve on a pump Suction line closed	This will be prevented by prestartup and operational checks. Further, during normal operation each pump will be monitored by suction and discharge pressure readings which will indicate if pump flows are sufficient. If valve cannot be opened use other pump.
4. Pump	Isolation valve on discharge line closed or check valve sticks closed	Same as Item 3.
5. Heat exchanger	Tube, shell or plate rupture	Isolate and valve in spare exchanger.
6. Heat exchanger vent or drain valve	Left open	This will be prevented by prestartup and operational checks. On the inservice cooling water heat exchanger such a situation would be readily assessed by makeup requirements to system. On the out-of-service cooling heat exchangers such a situation would be assessed during periodic testing.

TABLE 9.2.1-2 (Sheet 2 of 2)
(Continued)

COMPONENT COOLING WATER SYSTEM
MALFUNCTION ANALYSIS

Component	Malfunction	Comments and Consequences
7. Engrg safeguard cooling header	Header or pipe rupture	Isolate and valve in backup cooling loop. Each cooling loop provides 100 percent capacity to sustain a LOCA. If the pipe rupture occurs during a normal unit shutdown when both safeguard cooling headers are in operation, cooldown will continue at a reduced rate to extend the cooldown time period.
8. Miscellaneous equipment cooling header	Header or pipe rupture	Isolate and repair. All equipment supplied by the cooling water header can be removed from service, since none is associated with safeguard functions.
9. CCS pump	Loss of power to pump	Use spare pump.

TABLE 9.2.2-1

ESSENTIAL RAW COOLING WATER SYSTEM PUMP DESIGN DATA FOR TWO UNIT PLANT OPERATION

Essential Raw Cooling Water Pumps

Quantity	8
Type	Vertical centrifugal
Design capacity, gpm (each)	11,000
Design head (ft H_2O)	200
Maximum motor horsepower, hp (each)	700

Screen Wash Pumps

Quantity	4
Type	Vertical turbine
Design capacity, gpm (each)	270
Design head (ft H_2O)	350
Maximum motor horsepower, hp (each)	40

TABLE 9.2.2-2

ESSENTIAL RAW COOLING WATER SYSTEM
MALFUNCTION ANALYSIS

Component	Malfunction	Comments and Consequences
1. Pump	Rupture of a pump casing	Isolate pump and start redundant pump. Minimum requirements need only 4 out of 8 pumps.
2. Pump	Pump fails to start	Start spare pump. Two pumps will supply sufficient flow for one operating train. Four pumps are aligned with each train.
3. Pump	Isolation valve on discharge line closed or check valve sticks closed	This will be prevented by prestartup and operational checks. Further, during normal operation each pump will be monitored by discharge pressure readings which will indicate if pump flows are sufficient. If valve cannot be opened, use other pump.
4. Heat exchanger	Loss of pressure boundary	Isolate and valve in backup cooling loop.
5. Heat exchanger vent or drain valve	Left open	This will be prevented by prestartup and operational checks. On the inservice cooling water heat exchanger such a situation would be readily assessed. On the out-of-service cooling heat exchangers such a situation would be assessed during periodic testing.
6. Supply or discharge header	Pipe rupture	Isolate and valve in backup cooling loop. Each cooling loop provides 100 percent capacity to sustain a LOCA. If the pipe rupture occurs during a normal unit shutdown when both cooling headers are in operation, cooldown will continue at a reduced rate to extend the cooldown time period.
7. ERCW pumps	Loss of power to pump	Use spare pump which is aligned with another independent power train.

TABLE 9.2.7-1

RAW COOLING WATER SYSTEM PUMP DESIGN DATA

Quantity	5
Type	Horizontal Centrifugal
Rated Capacity (gpm)	7200
Rated Head (ft H_2O)	130
Motor Horsepower (hp)	300

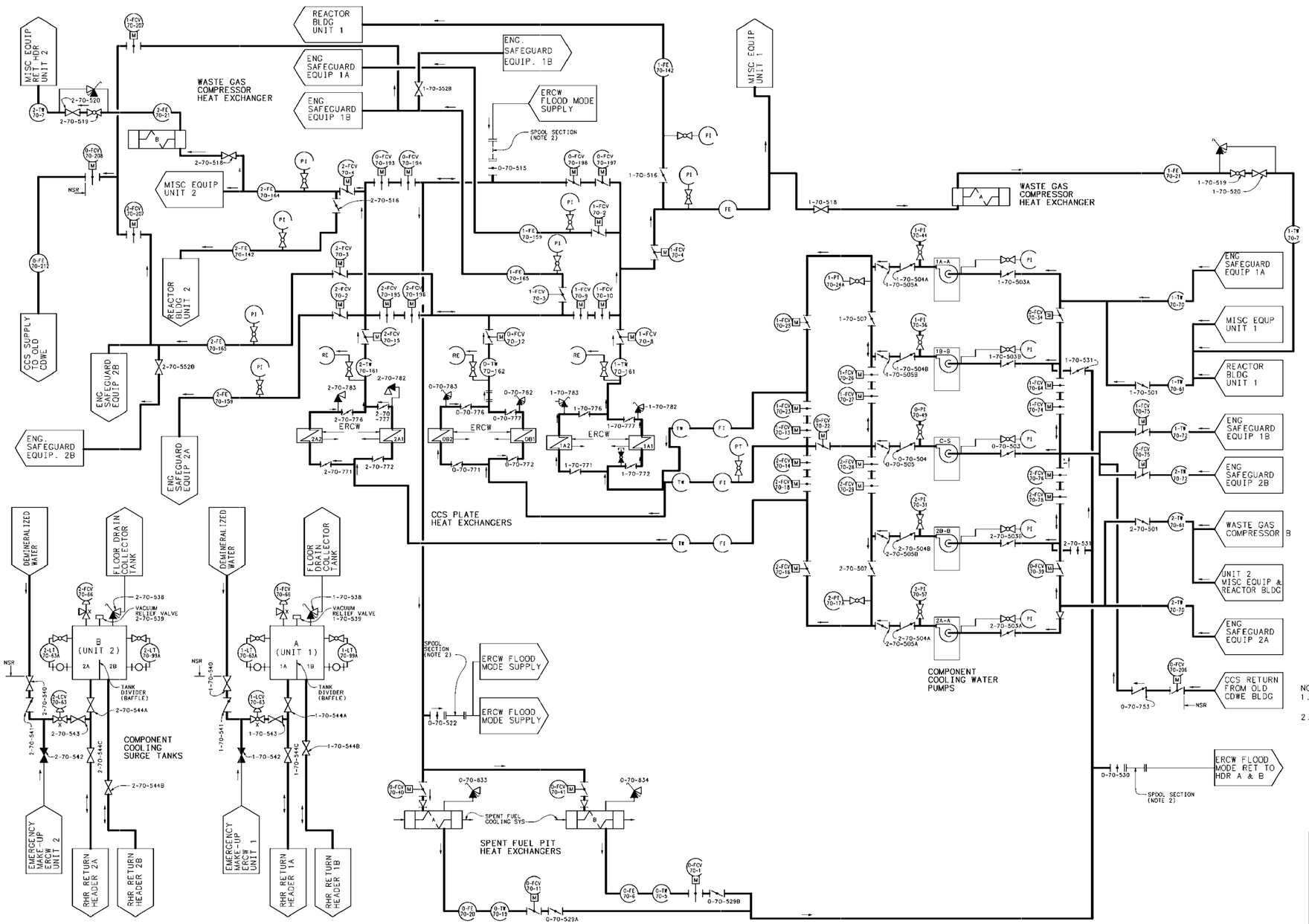

NOTES:
1. NSR DEFINES NON-SAFETY RELATED BOUNDARY.
2. SPOOL SECTIONS ARE INSTALLED ONLY WHEN NEEDED.

SEQUOYAH NUCLEAR PLANT
FINAL SAFETY ANALYSIS REPORT

FIGURE 9.2.1-1
COMPONENT COOLING SYSTEM
(REVISED BY AMMENDMENT 17)

CAD MAINTAINED DRAWING

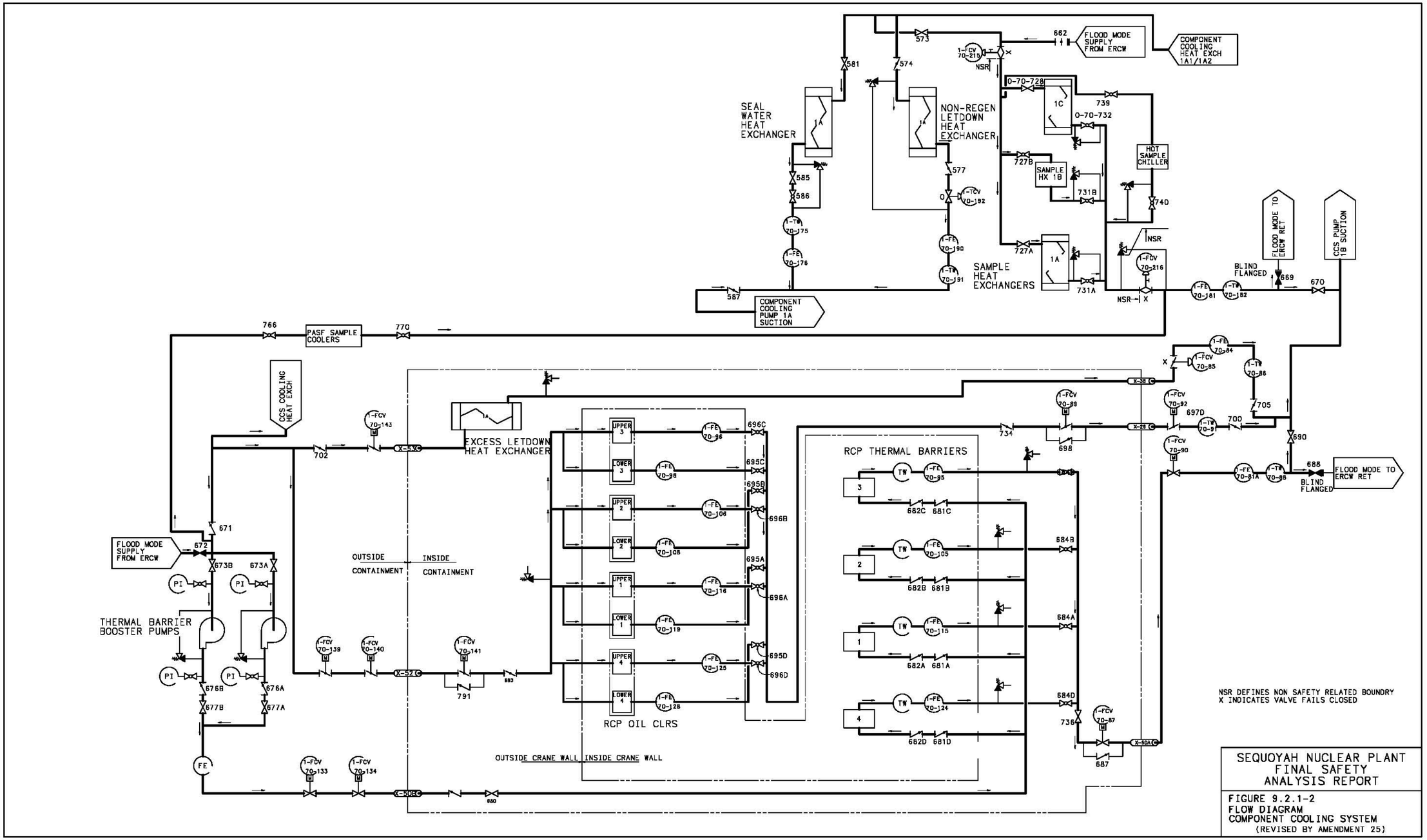

SEQUOYAH NUCLEAR PLANT
FINAL SAFETY
ANALYSIS REPORT

FIGURE 9.2.1-2
FLOW DIAGRAM
COMPONENT COOLING SYSTEM
(REVISED BY AMENDMENT 25)

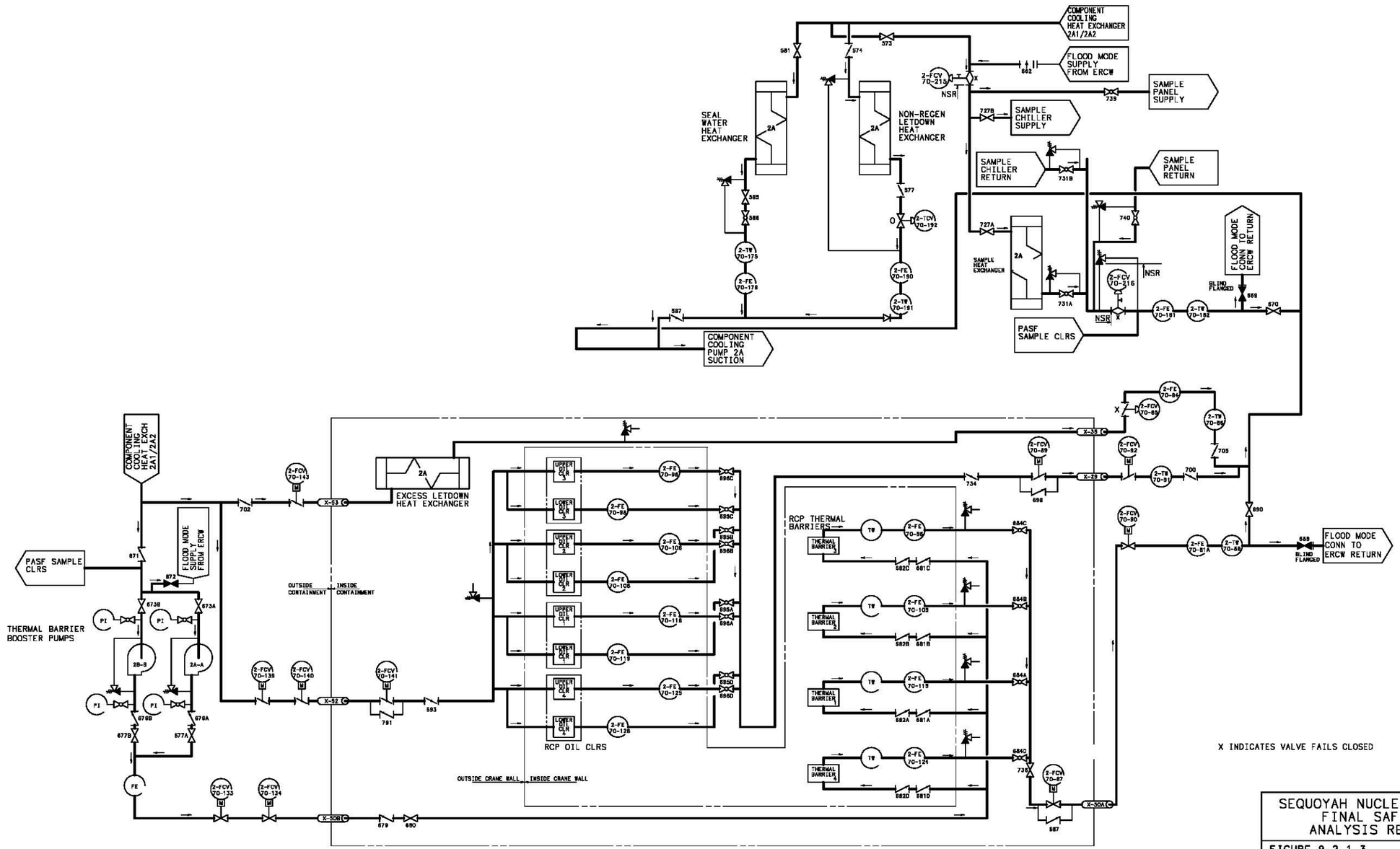

SEQUOYAH NUCLEAR PLANT
FINAL SAFETY
ANALYSIS REPORT

FIGURE 9.2.1-3
COMPONENT COOLING SYSTEM
(REVISED BY AMENDMENT 25)

CAD MAINTAINED DRAWING

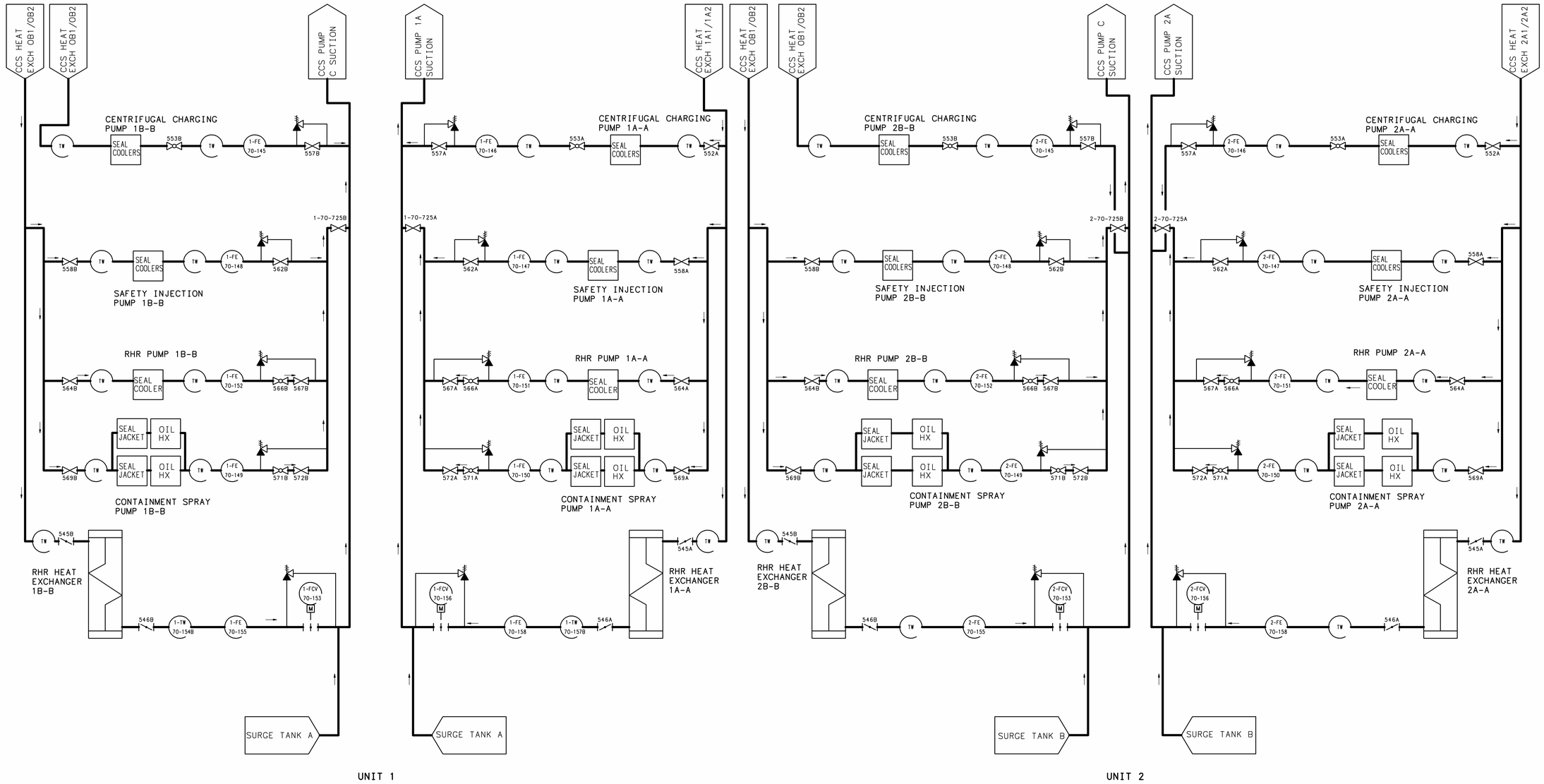

SEQUOYAH NUCLEAR PLANT
FINAL SAFETY
ANALYSIS REPORT

FIGURE 9.2.1-4
COMPONENT COOLING SYSTEM
(REVISED BY AMMENDMENT 22)

Best Available Historical Image

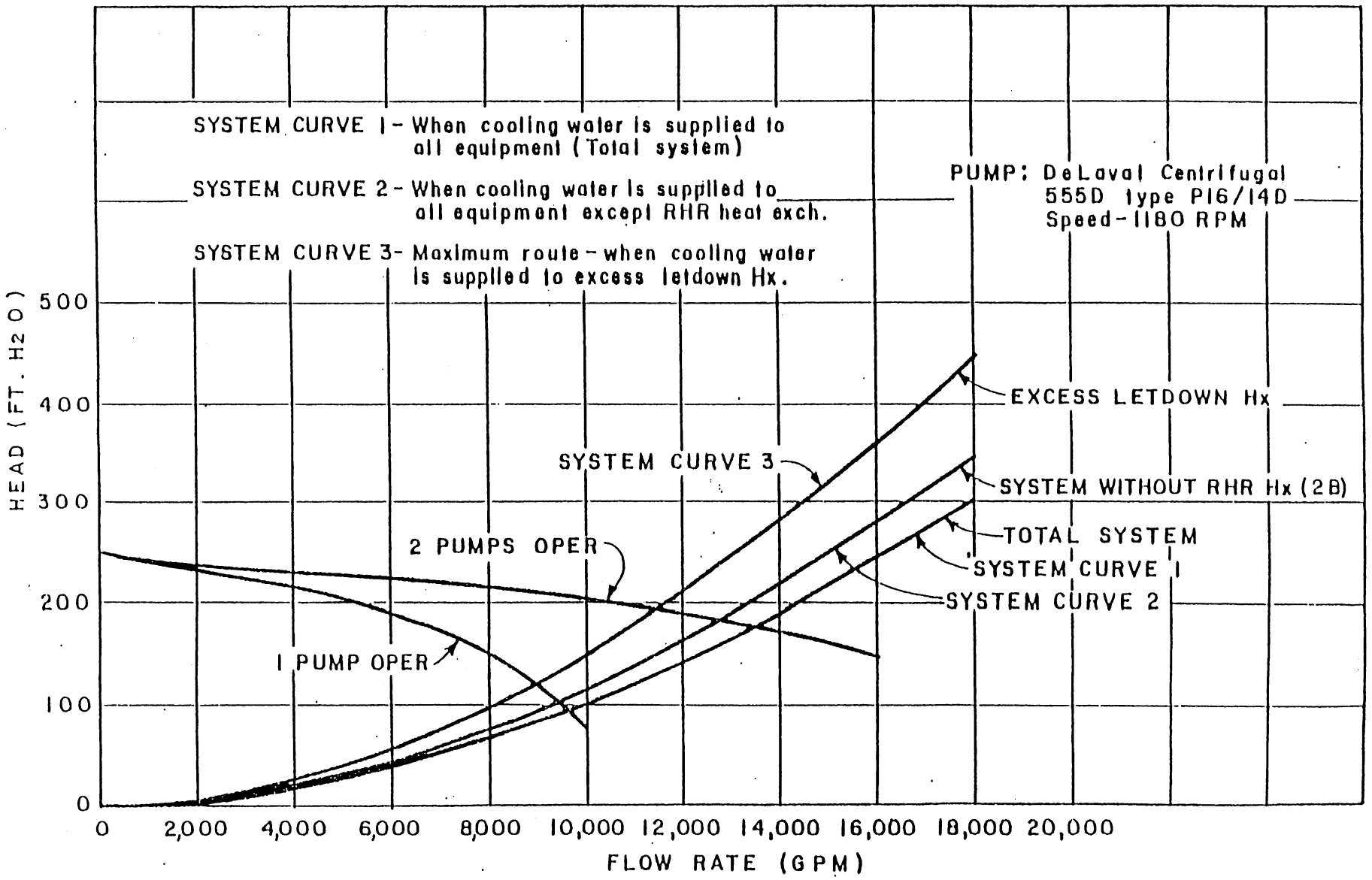

Figure 9.2.1-5 Head Requirements for CCS System

(REVISED BY AMENDMENT 13)

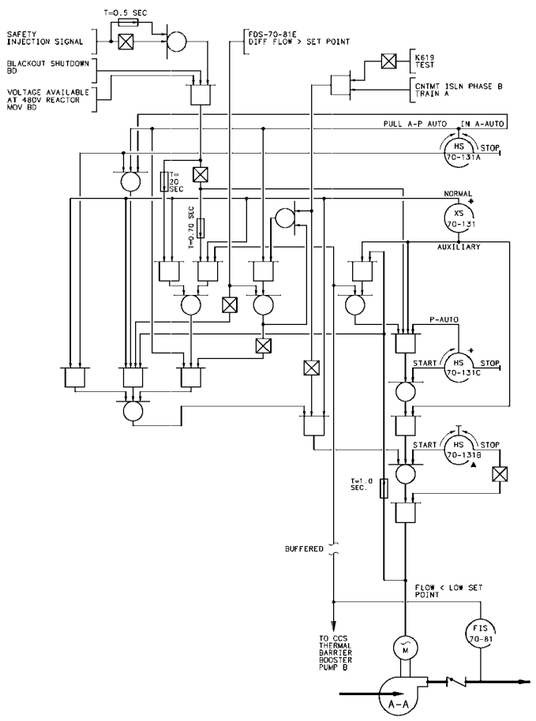

PUMP B-B LOGIC TYPICAL
THERMAL BARRIER BOOSTER PUMP A-A

SEQUOYAH NUCLEAR PLANT
FINAL SAFETY
ANALYSIS REPORT

FIGURE 9.2.1-6
COMPONENT COOLING THERMAL
BARRIER BOOSTER PUMP LOGIC
(REVISED BY AMENDMENT 13)

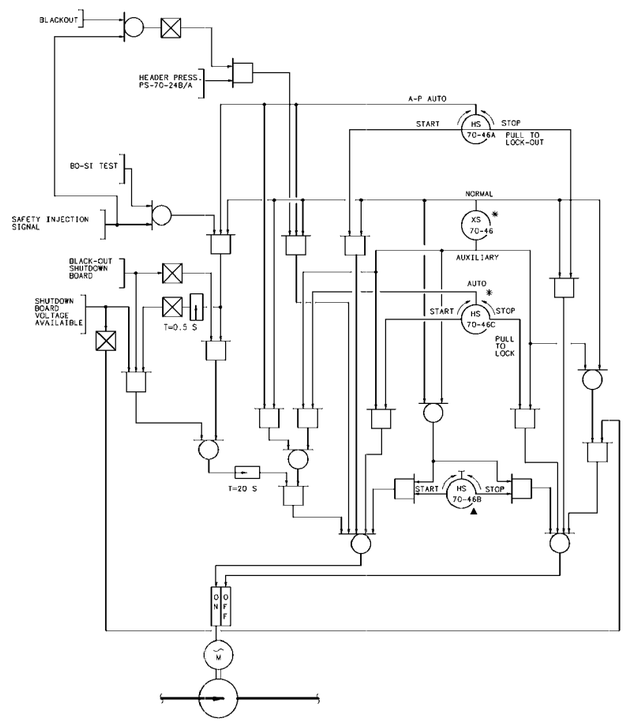

COMPONENT COOLING PUMPS 1B-B, 2A-A, & 2B-B LOGIC TYPICAL TO COMPONENT COOLING PUMP 1A-A

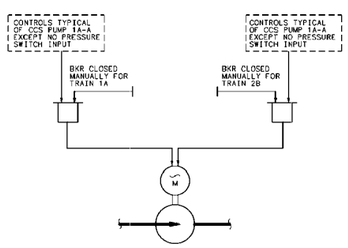

SEQUOYAH NUCLEAR PLANT
FINAL SAFETY
ANALYSIS REPORT

FIGURE 9.2.1-7
COMPONENT COOLING PUMP LOGIC

(REVISED BY AMENDMENT 13)

DRAWING SERVICES UNIT
PROCAD MAINTAINED DRAWING
THIS CONFIGURATION CONTROL DRAWING IS MAINTAINED BY TMC SGN CAD UNIT AND IS NOW PART OF THE TVA PROCADAM DATABASE.
COMPUTER GRAPHICS

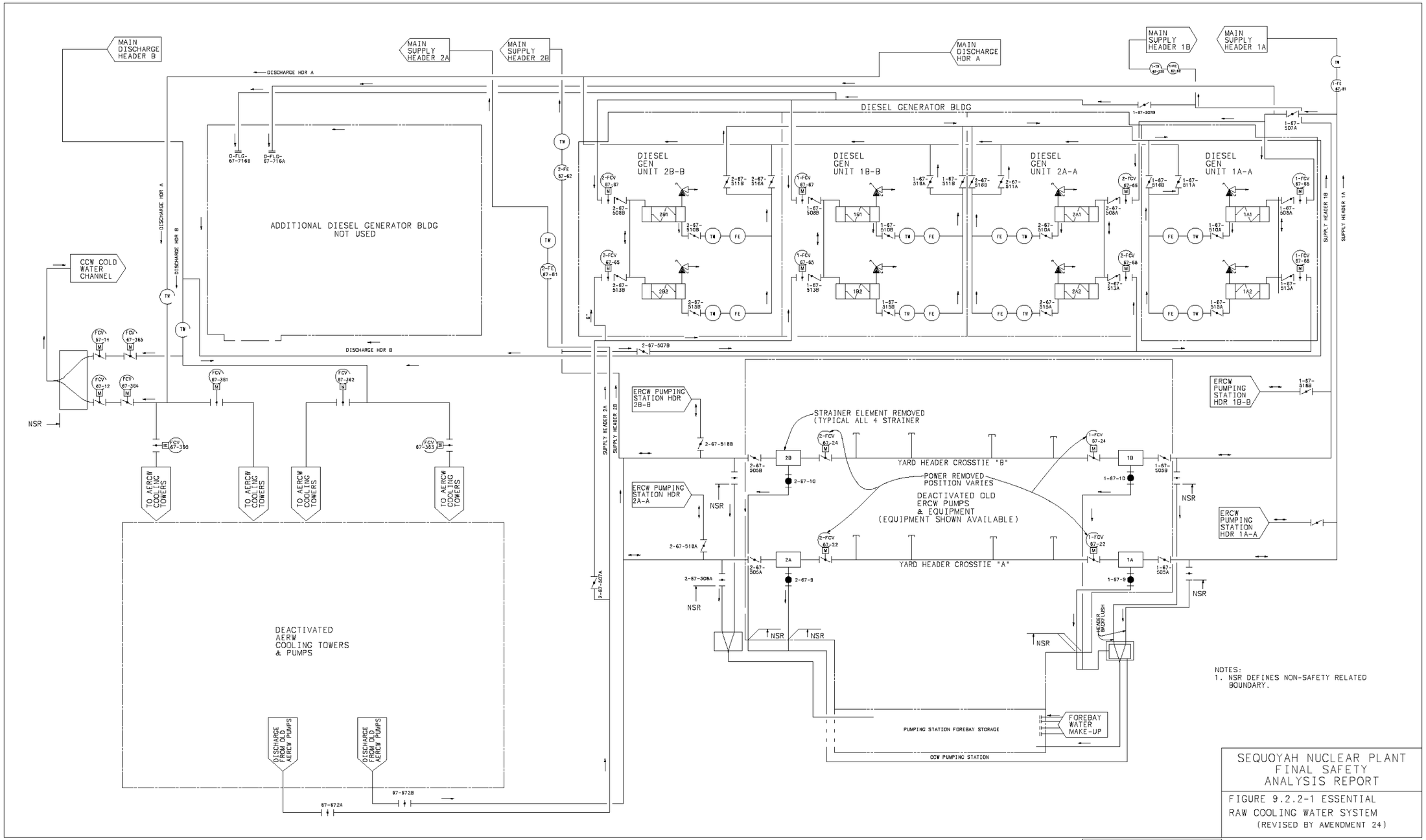

NOTES:
1. NSR DEFINES NON-SAFETY RELATED BOUNDARY.

SEQUOYAH NUCLEAR PLANT
FINAL SAFETY
ANALYSIS REPORT

FIGURE 9.2.2-1 ESSENTIAL
RAW COOLING WATER SYSTEM
(REVISED BY AMENDMENT 24)

CAD MAINTAINED DRAWING

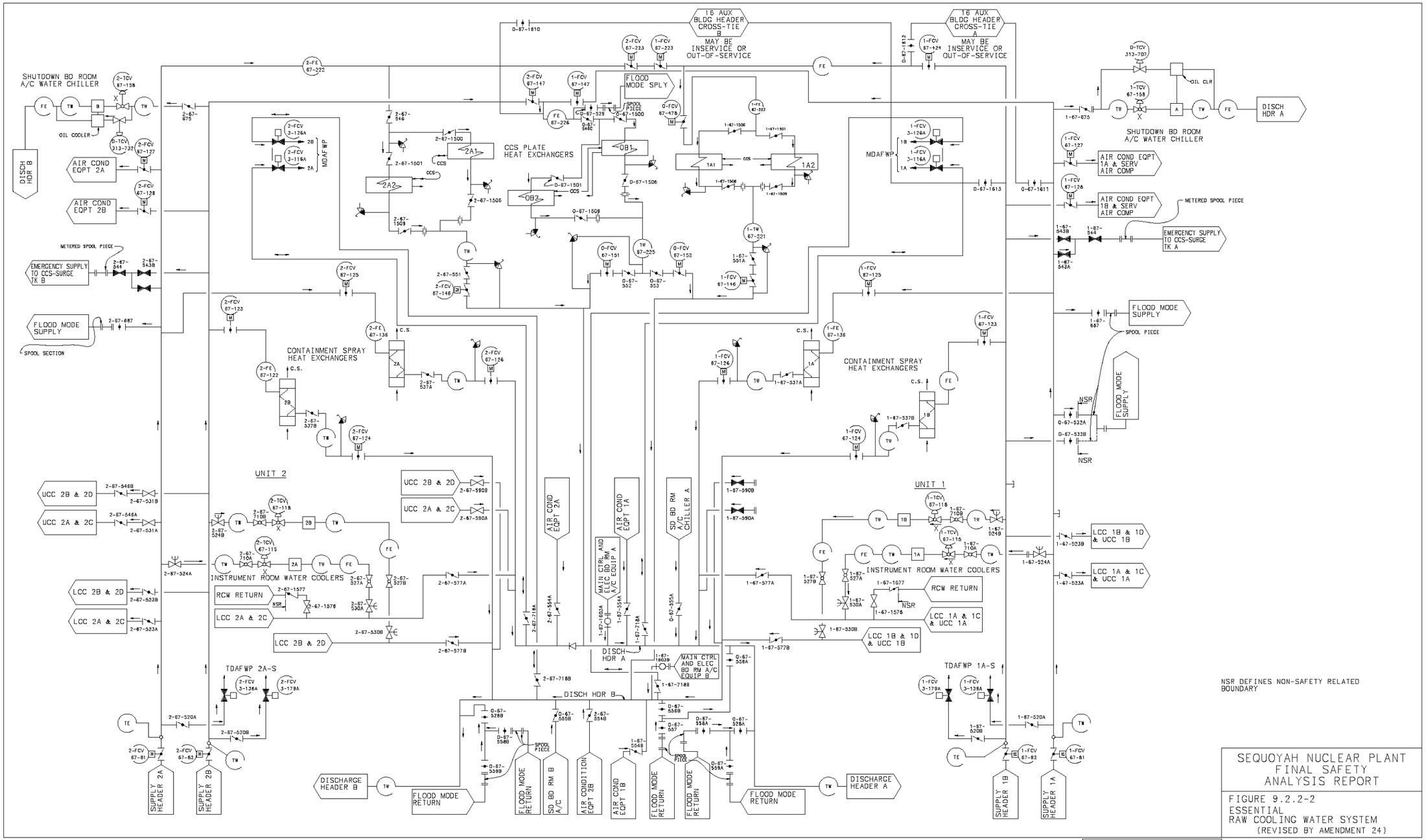

SEQUOYAH NUCLEAR PLANT
FINAL SAFETY
ANALYSIS REPORT

FIGURE 9.2.2-2
ESSENTIAL
RAW COOLING WATER SYSTEM
(REVISED BY AMENDMENT 24)

CAD MAINTAINED DRAWING

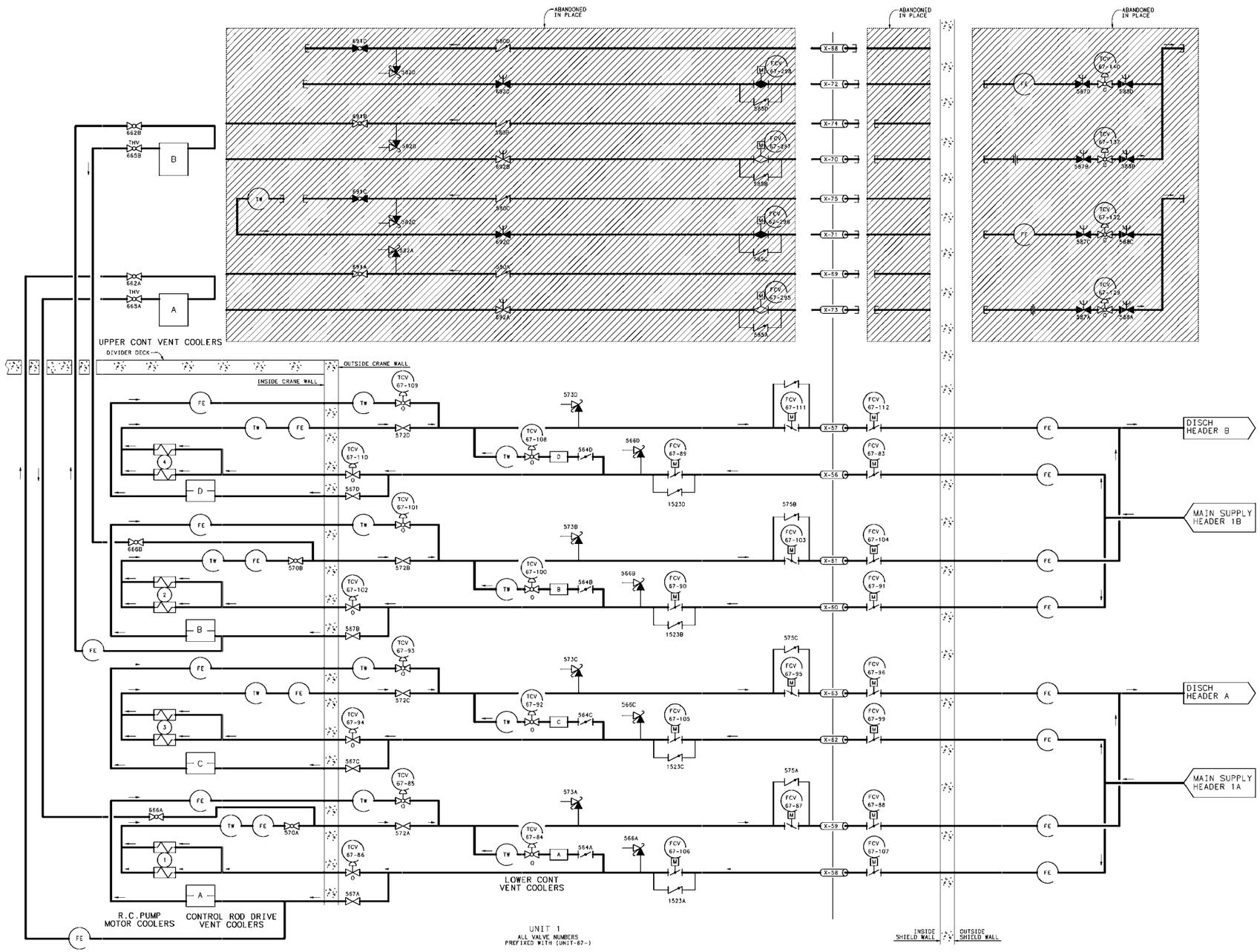

NOTES:
1. FOR UNIT 1 ONLY.
2. FOR UNIT 2, SEE FIGURE 9.2.2-3A.

SEQUOYAH NUCLEAR PLANT
FINAL SAFETY
ANALYSIS REPORT

FIGURE 9.2.2-3
ESSENTIAL RAW COOLING WATER
(REVISED BY AMENDMENT 18)

CAD MAINTAINED DRAWING

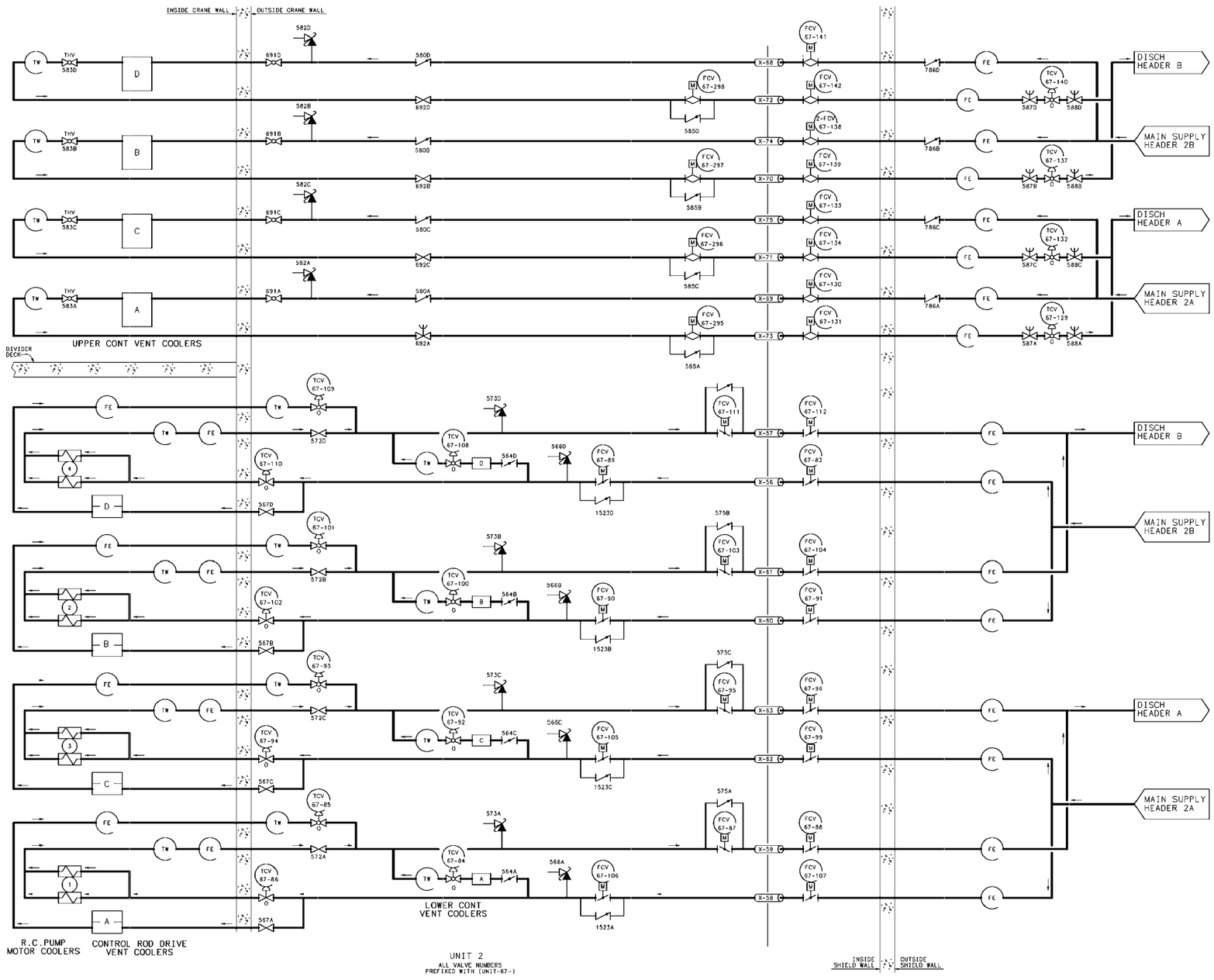

NOTES:
1. FOR UNIT 2 ONLY.
2. FOR UNIT 1, SEE FIGURE 9.2.2-3.

SEQUOYAH NUCLEAR PLANT
FINAL SAFETY
ANALYSIS REPORT

FIGURE 9.2.2-3A
ESSENTIAL RAW COOLING WATER
(REVISED BY AMENDMENT 16)

CAD MAINTAINED DRAWING

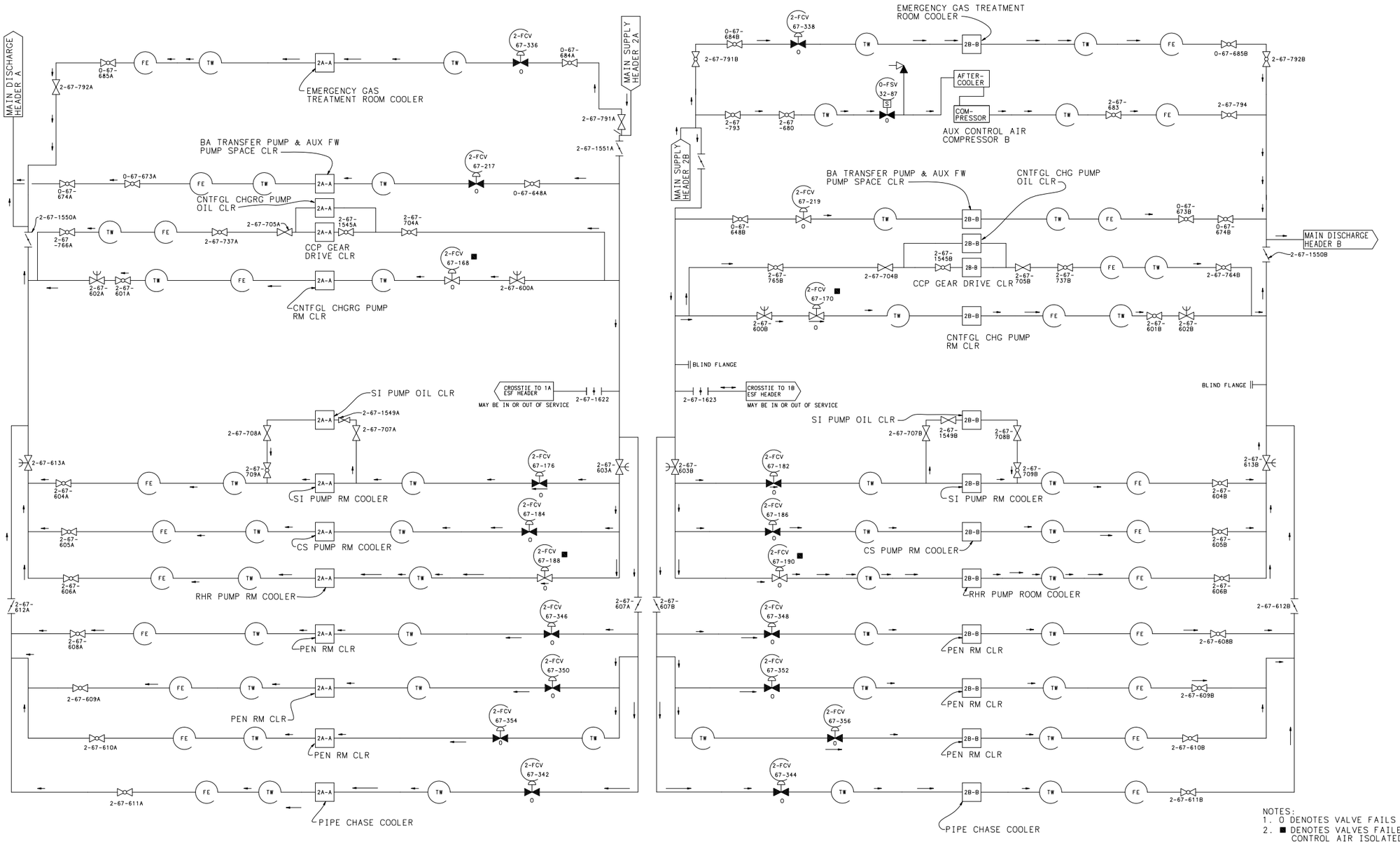

NOTES:
1. O DENOTES VALVE FAILS OPEN.
2. ■ DENOTES VALVES FAILED OPEN WITH CONTROL AIR ISOLATED.

SEQUOYAH NUCLEAR PLANT
FINAL SAFETY
ANALYSIS REPORT

FIGURE 9.2.2-4

UNIT 2-ESSENTIAL RAW COOLING WATER
(REVISED BY AMENDMENT 30)

CAD MAINTAINED DRAWING

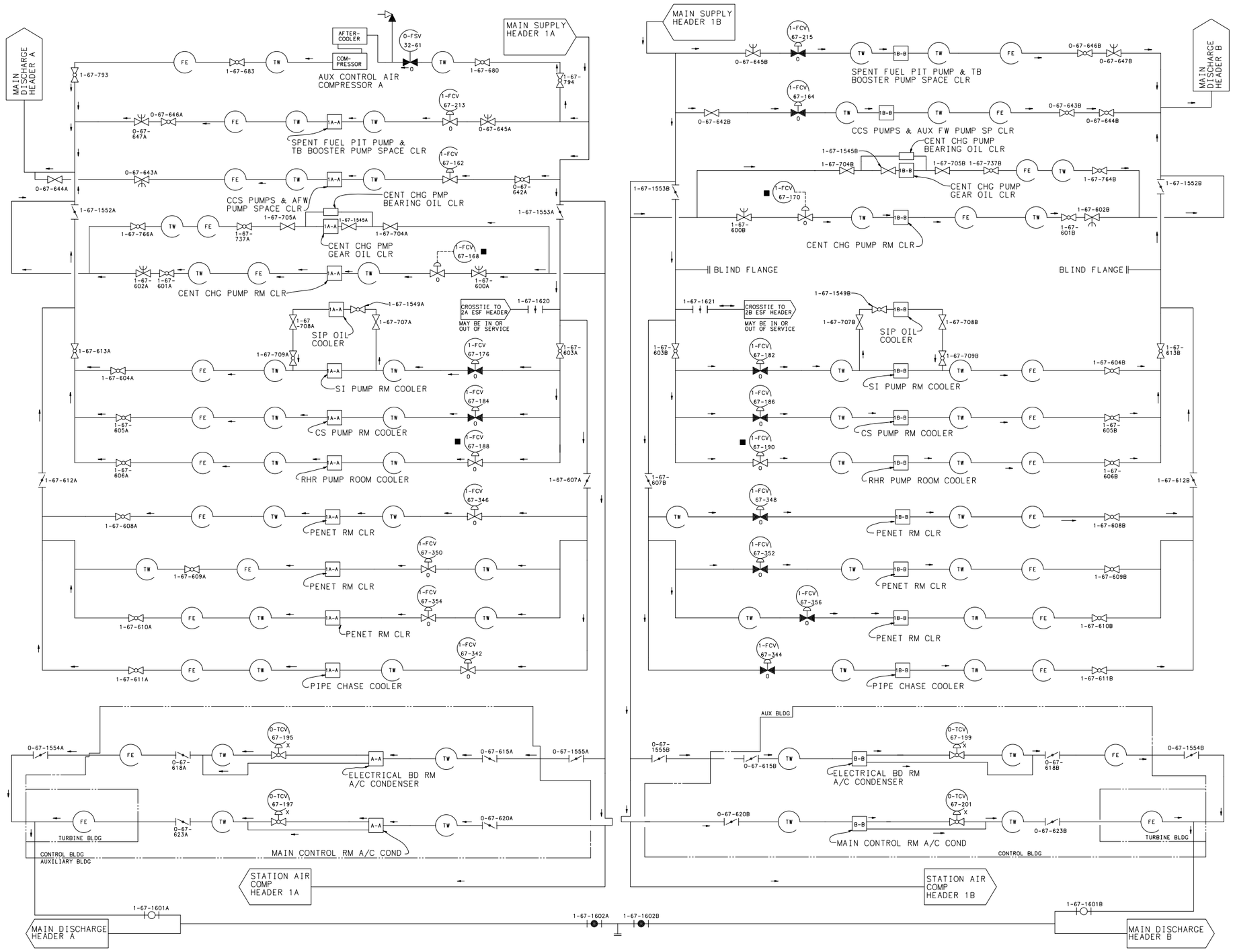

NOTES:
1. O DENOTES VALVE FAILS OPEN.
2. ■ DENOTES VALVES FAILED OPEN WITH CONTROL AIR ISOLATED.
3. X DENOTES VALVE FAILS CLOSED.

SEQUOYAH NUCLEAR PLANT
FINAL SAFETY
ANALYSIS REPORT

FIGURE 9.2.2-4A
UNIT 1-ESSENTIAL RAW COOLING WATER
(REVISED BY AMENDMENT 30)

CAD MAINTAINED DRAWING

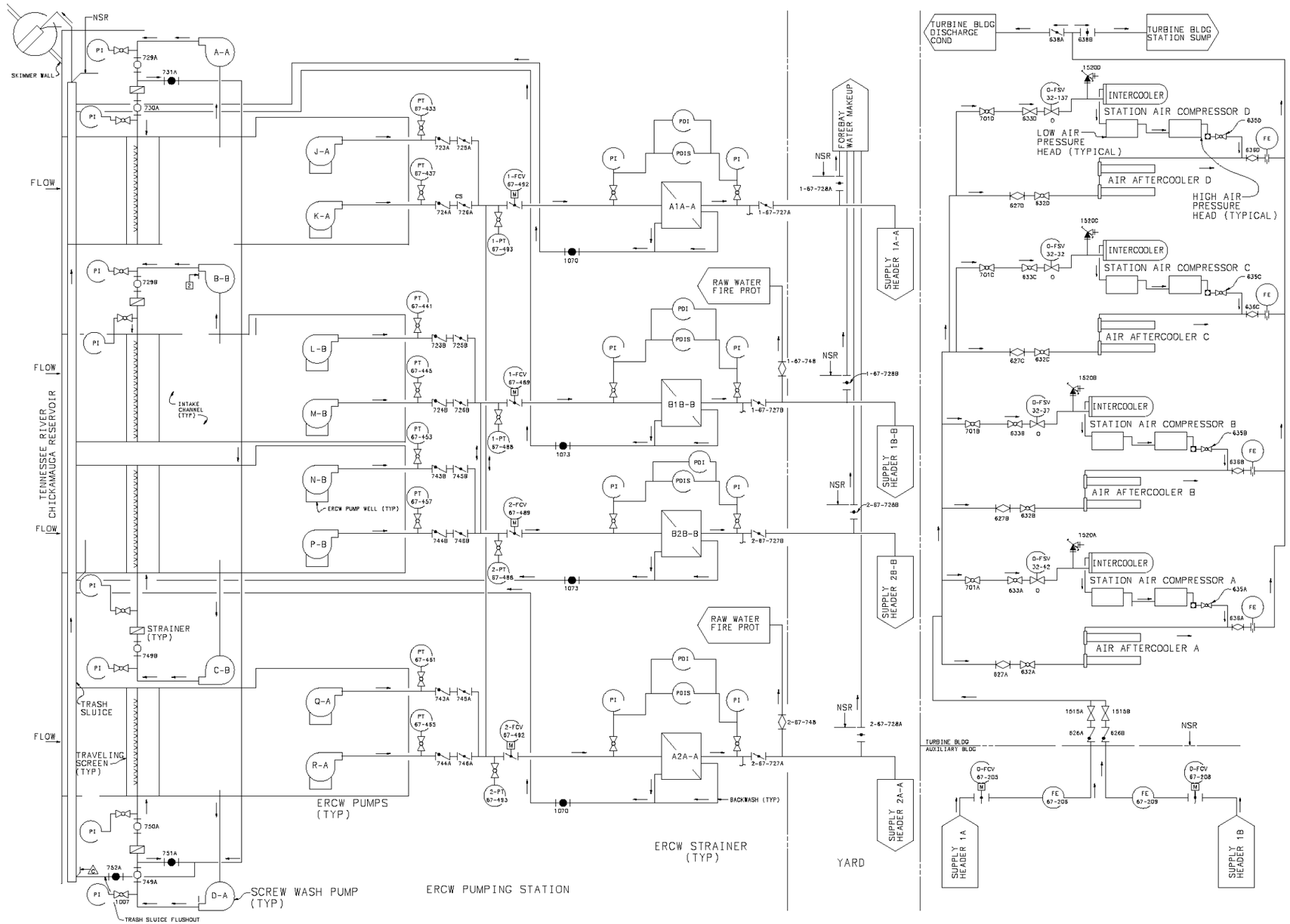

NOTES:
1. NSR DEFINES NON-SAFETY RELATED BOUNDARY.

SEQUOYAH NUCLEAR PLANT
FINAL SAFETY
ANALYSIS REPORT

FIGURE 9.2.2-5 ESSENTIAL
RAW COOLING WATER SYSTEM
(REVISED BY AMENDMENT 24)

CAD MAINTAINED DRAWING

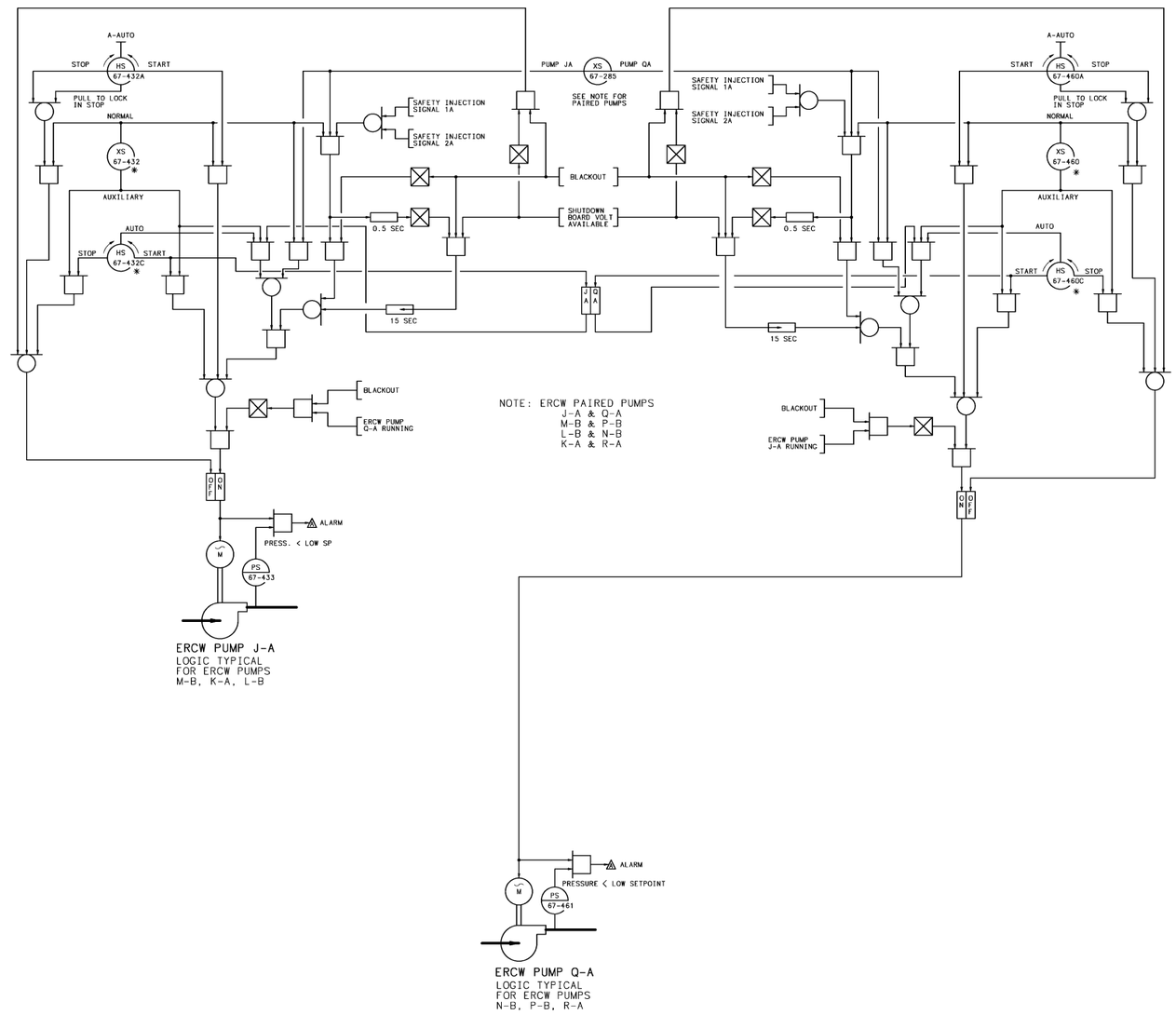

1. LOCATION OF CONTROLS
   - ✳ AUXILIARY CONTROL STATION
   - ▲ LOCAL

SEQUOYAH NUCLEAR PLANT
FINAL SAFETY
ANALYSIS REPORT

FIGURE 9.2.2-6
ERCW PUMP LOGIC

(REVISED BY AMENDMENT 13)

DRAWING SERVICES UNIT
PROCAD MAINTAINED DRAWING
THIS CONFIGURATION CONTROL DRAWING IS MAINTAINED BY THE SQN CAD UNIT AND IS NOW PART OF THE TVA PROCADAM DATABASE.
COMPUTER GRAPHICS

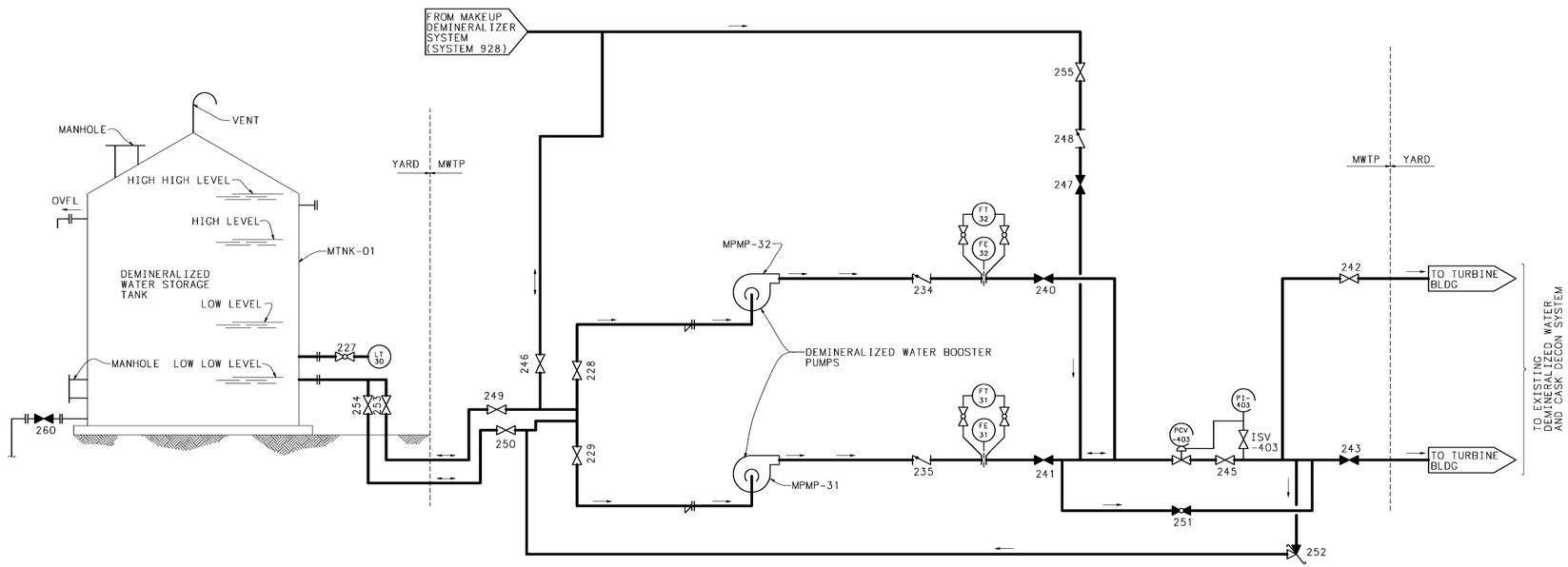

SEQUOYAH NUCLEAR PLANT
FINAL SAFETY
ANALYSIS REPORT

FIGURE 9.2.3-1
FLOW DIAGRAM DEMINERIZER WATER
STORAGE AND DISTRIDUTION SYSTEM
(REVISED BY AMENDMENT 13)

DRAWING SERVICES UNIT
PROCAD MAINTAINED DRAWING
THIS CONFIGURATION CONTROL DRAWING IS MAINTAINED BY THE SQN CAD UNIT AND IS NOW PART OF THE TVA PROCADAM DATABASE.
COMPUTER GRAPHICS

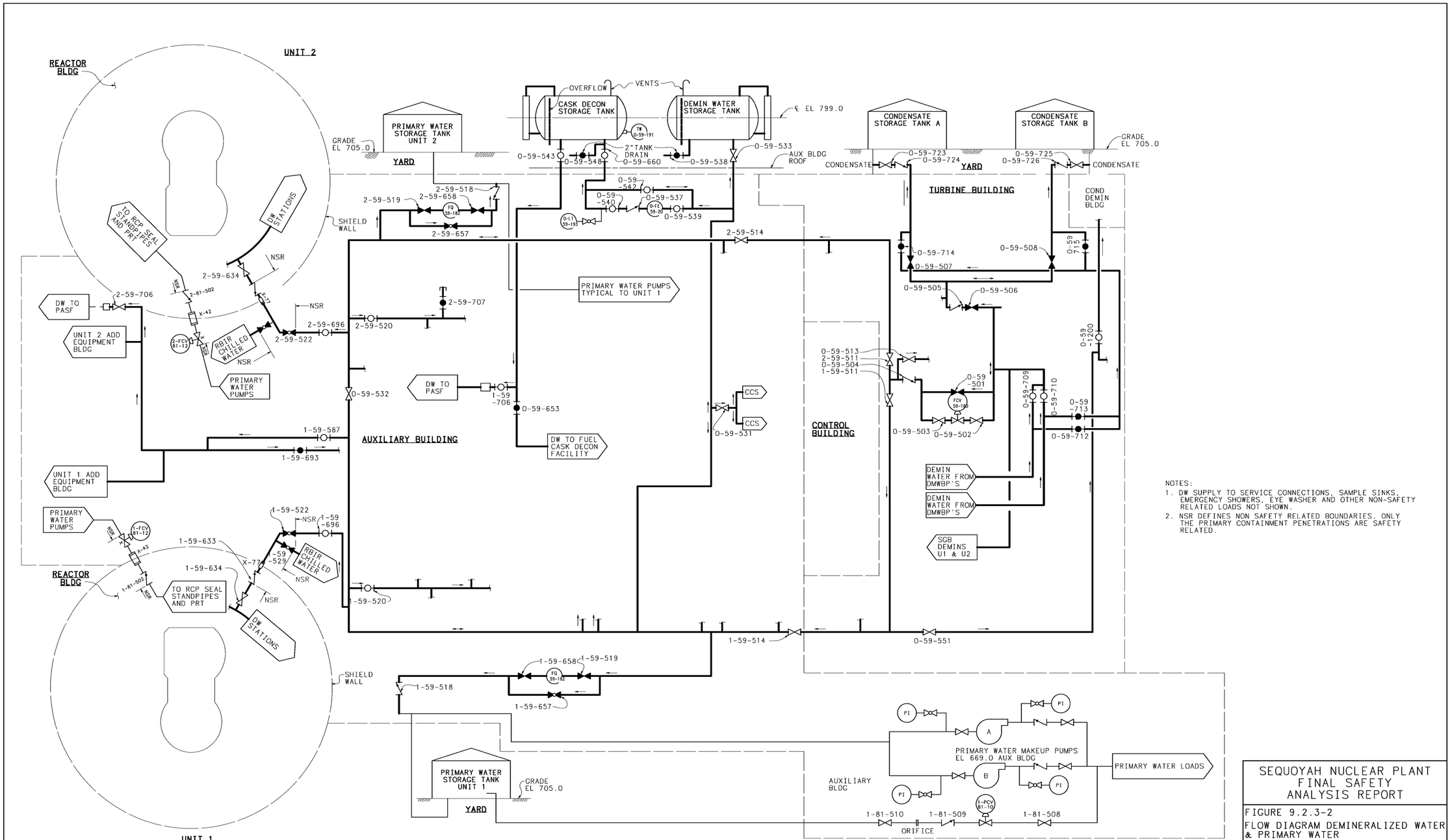

NOTES:

1. DW SUPPLY TO SERVICE CONNECTIONS, SAMPLE SINKS, EMERGENCY SHOWERS, EYE WASHER AND OTHER NON-SAFETY RELATED LOADS NOT SHOWN.
2. NSR DEFINES NON SAFETY RELATED BOUNDARIES. ONLY THE PRIMARY CONTAINMENT PENETRATIONS ARE SAFETY RELATED.

SEQUOYAH NUCLEAR PLANT
FINAL SAFETY
ANALYSIS REPORT

FIGURE 9.2.3-2

FLOW DIAGRAM DEMINERALIZED WATER & PRIMARY WATER

(REVISED BY AMENDMENT 16)

CAD MAINTAINED DRAWING

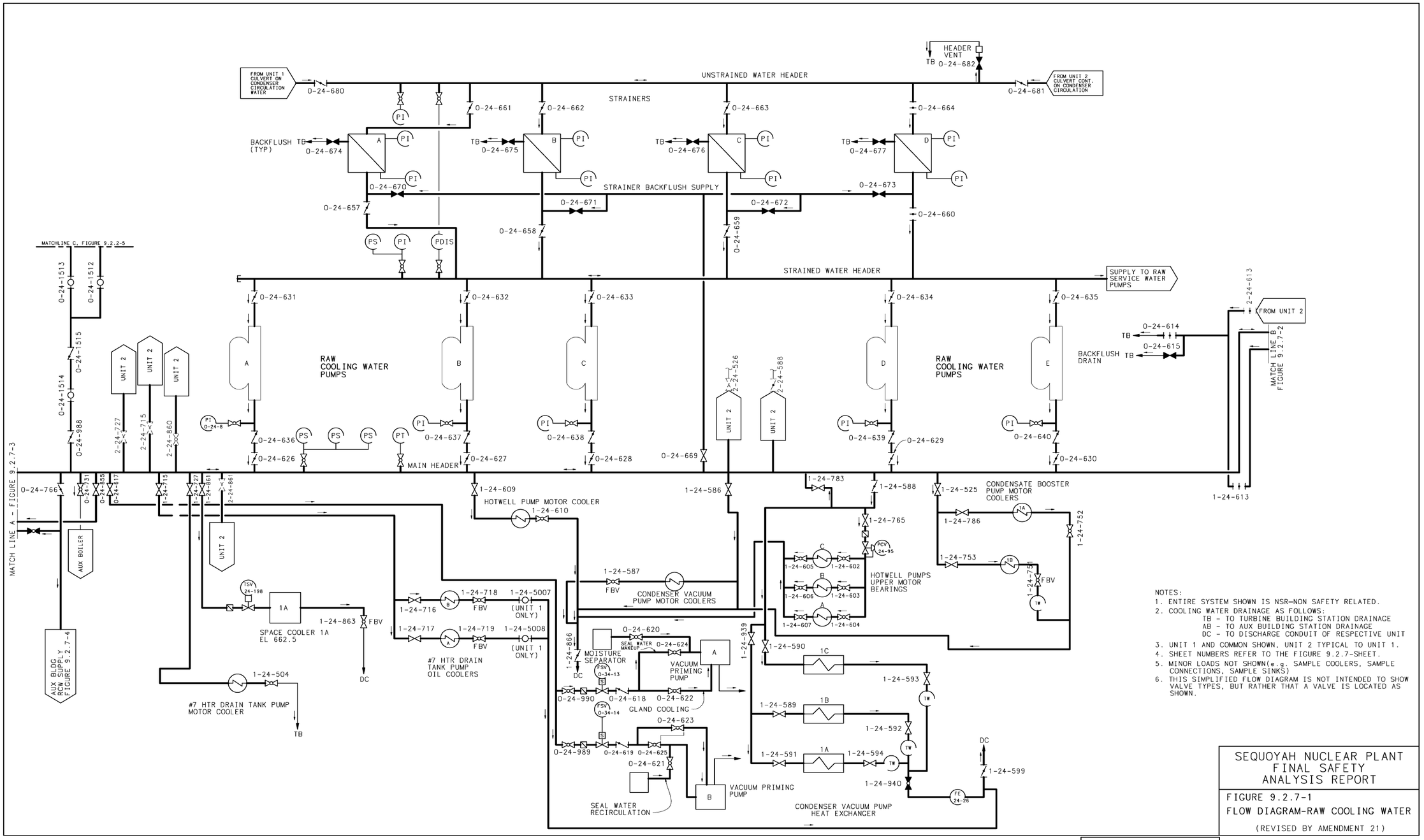

NOTES:

1. ENTIRE SYSTEM SHOWN IS NSR=NON SAFETY RELATED.
2. COOLING WATER DRAINAGE AS FOLLOWS:
   TB - TO TURBINE BUILDING STATION DRAINAGE
   AB - TO AUX BUILDING STATION DRAINAGE
   DC - TO DISCHARGE CONDUIT OF RESPECTIVE UNIT
3. UNIT 1 AND COMMON SHOWN, UNIT 2 TYPICAL TO UNIT 1.
4. SHEET NUMBERS REFER TO THE FIGURE 9.2.7-SHEET.
5. MINOR LOADS NOT SHOWN(e.g. SAMPLE COOLERS, SAMPLE CONNECTIONS, SAMPLE SINKS)
6. THIS SIMPLIFIED FLOW DIAGRAM IS NOT INTENDED TO SHOW VALVE TYPES, BUT RATHER THAT A VALVE IS LOCATED AS SHOWN.

SEQUOYAH NUCLEAR PLANT
FINAL SAFETY
ANALYSIS REPORT

FIGURE 9.2.7-1

FLOW DIAGRAM-RAW COOLING WATER

(REVISED BY AMENDMENT 21)

CAD MAINTAINED DRAWING

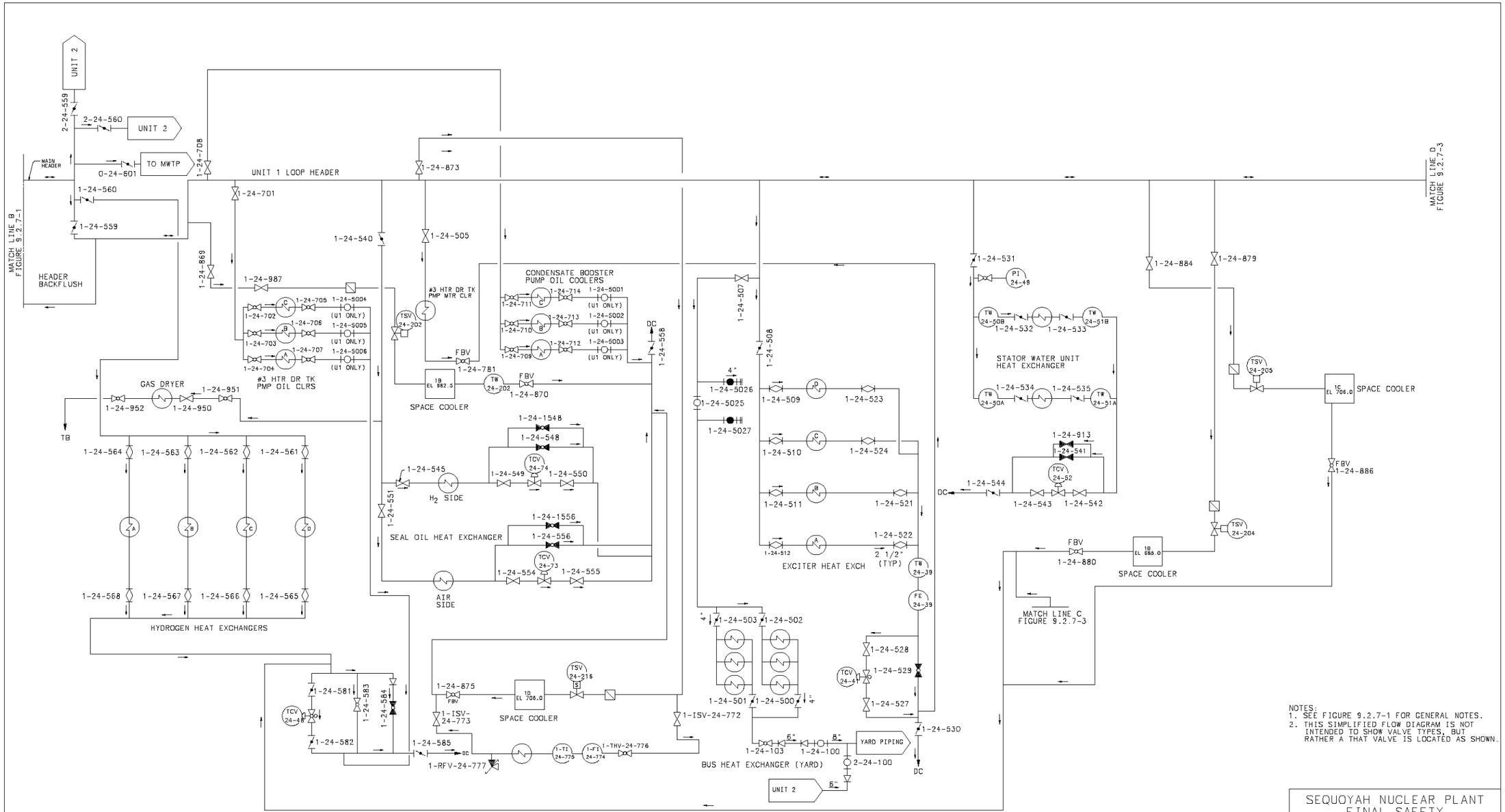

NOTES:
1. SEE FIGURE 9.2.7-1 FOR GENERAL NOTES.
2. THIS SIMPLIFIED FLOW DIAGRAM IS NOT INTENDED TO SHOW VALVE TYPES, BUT RATHER A THAT VALVE IS LOCATED AS SHOWN.

SEQUOYAH NUCLEAR PLANT
FINAL SAFETY
ANALYSIS REPORT

FIGURE 9.2.7-2
FLOW DIAGRAM-RAW COOLING WATER

(REVISED BY AMENDMENT 25)

CAD MAINTAINED DRAWING

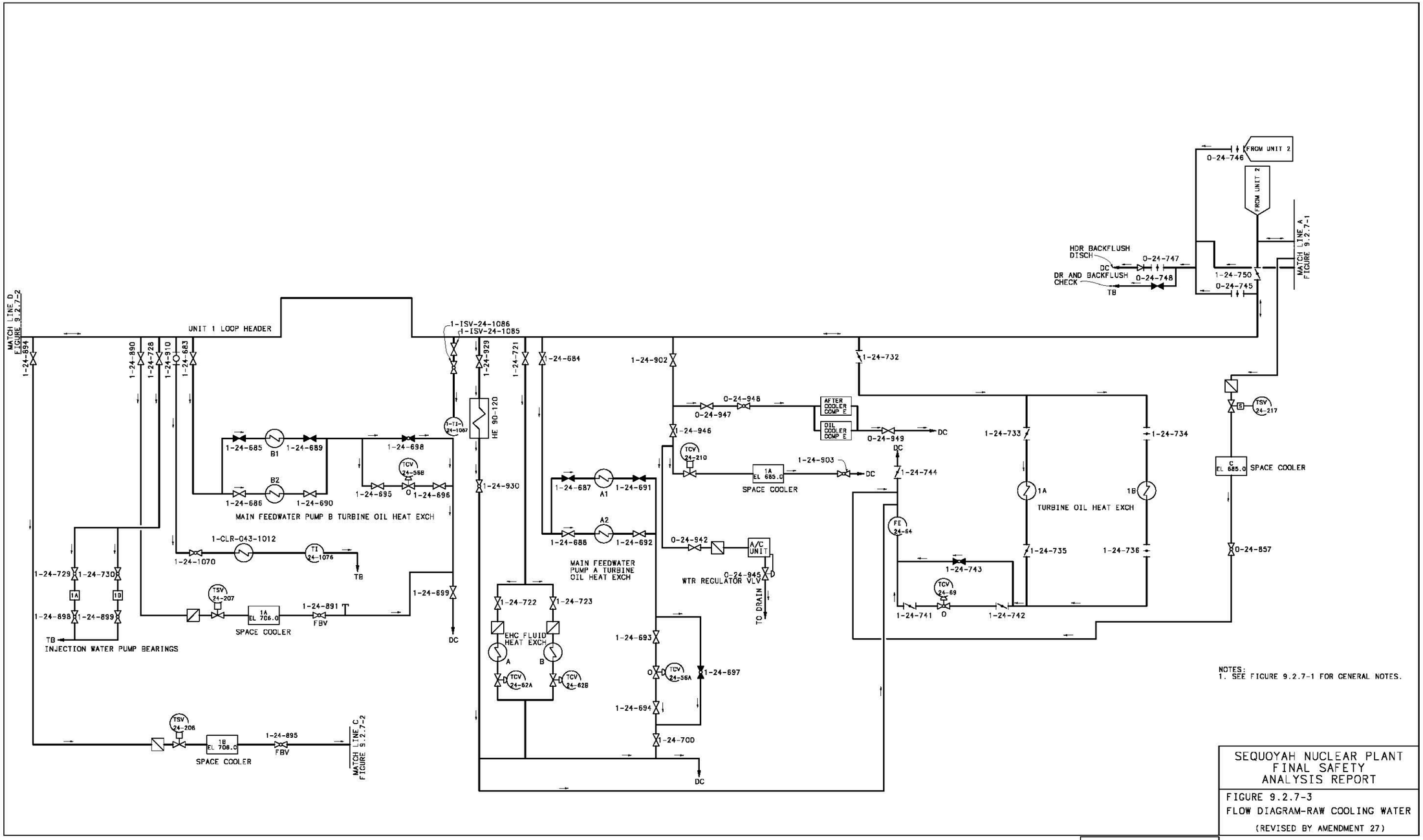

NOTES:
1. SEE FIGURE 9.2.7-1 FOR GENERAL NOTES.

SEQUOYAH NUCLEAR PLANT
FINAL SAFETY
ANALYSIS REPORT

FIGURE 9.2.7-3
FLOW DIAGRAM-RAW COOLING WATER
(REVISED BY AMENDMENT 27)

CAD MAINTAINED DRAWING

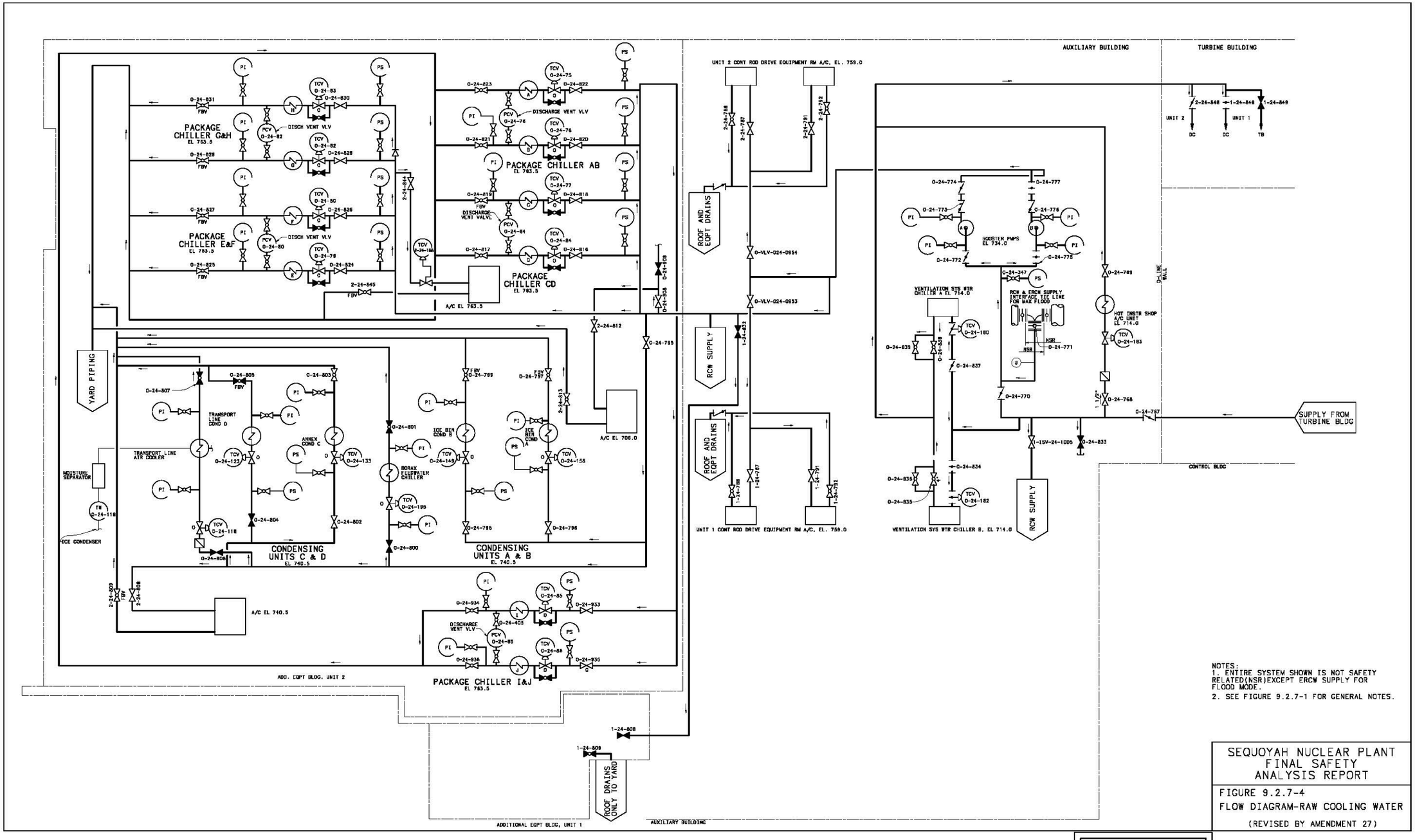

NOTES:
1. ENTIRE SYSTEM SHOWN IS NOT SAFETY RELATED(NSR)EXCEPT ERCW SUPPLY FOR FLOOD MODE.
2. SEE FIGURE 9.2.7-1 FOR GENERAL NOTES.

SEQUOYAH NUCLEAR PLANT
FINAL SAFETY
ANALYSIS REPORT

FIGURE 9.2.7-4
FLOW DIAGRAM-RAW COOLING WATER

(REVISED BY AMENDMENT 27)

CAD MAINTAINED DRAWING

9.3 PROCESS AUXILIARIES

9.3.1 Compressed Air System

9.3.1.1 Design Basis

The Compressed Air (CA) System is common to both units and is divided into two subsystems; the Station Control and Service Air (SCSA) System, and the Auxiliary Control Air (ACA) Systems for emergency use. The SCSA System is designed to supply adequate compressed air capacity for general plant service, instrumentation, testing, and control. Breathing Air Stations (BAS) are provided for personnel working in airborne contaminated environments. The BAS are temporarily connected to the service air portion of the SCSA System when in use. Each ACA System supplies air to the Essential Air Distribution System of Units 1 and 2. The ACA systems ensure that vital equipment requiring control air will have a continuous air supply under design basis conditions, including safe shutdown earthquake and maximum possible flood.

9.3.1.2 System Description

SCSA System

Station control and service air is supplied by two motor-driven reciprocating compressors, two motor-driven centrifugal compressors, and one motor-driven rotary screw compressor. The system includes normal accessory equipment such as cylinder cooling equipment, aftercoolers, and safety relief valves. Refer to Figures 9.3.1-1 and 9.3.1-2.

The four station control air compressors and one dedicated service air compressor discharge into two redundant headers which are provided with manual isolation valves. These headers feed the two control air receivers which in turn supply air through redundant headers to the control air station. The control air station contains three complete trains of prefilters, dryers, and afterfilters.

Manual bypasses are provided around each dryer train element for emergency operation. The control air is then piped through headers to valves, controllers, instruments, etc. throughout the plant.

Service air is supplied to the service air receiver by a single header and by the single rotary screw compressor, and is not processed through dryers and filter trains as is done for the control air. Service air is supplied through a pressure control valve which closes if control air pressure drops below a specified set point, thus ensuring that control air requirements take precedence over service air requirements. Service air is piped from the receiver to service outlets and miscellaneous equipment throughout the plant.

ACA System

Auxiliary control air is supplied by two motor-driven, nonlubricated, single stage, reciprocating compressors. Each compressor is sized to supply one ESF train the total safety-related control air requirements of both units in the event of an accident, flood, or loss of the SCSA System. The ACA System is separated into two independent trains each containing its own compressor,

aftercooler, receiver, dryer, and filters. Manual bypasses are provided around each dryer train for emergency operation and to facilitate dryer maintenance. The auxiliary control air piping is arranged so that the auxiliary receivers are charged from the nonqualified SCSA System during normal operation. Electric power for the auxiliary systems is provided from both normal and emergency sources. The ACA System components located in Class I structures are designed to Class I seismic requirements, except for the piping and components downstream of the moisture traps and moisture trap bypass valves which are designed to Class I (L) requirements. The ACA System is Class IE except for the air dryers. The ACA system is automatically isolated from the SCSA System upon loss of air from the SCSA system. Refer to Table 9.3.1-1 for ACA design information and Figure 9.3.1-3.

SCSA and ACA Systems

The dryer and filter trains for both the Station Control and Service, and Auxiliary Air Systems are designed to give compressed air of high instrument quality. The prefilters are designed to remove liquid water entrainment and other foreign matter from the compressed air stream. The air dryers dry the air to a sufficiently low dewpoint. The discharge of the dryers is routed through an afterfilter which removes particles of desiccant and other foreign matter. The air quality and dew point are tested in accordance with periodic instructions.

9.3.1.3 Safety Evaluation

SCSA System

The SCSA System is designed to provide a highly reliable source of compressed air for plant uses. The station control and service air compressors are powered from diverse electrical sources. Two compressors are powered from the Turbine Building common board, two from shutdown boards, and the other from the Hot Shop Low Voltage Switchgear Board. The CA System contains sufficient receiver capacity to supply air for a short period of time. The loss of all station control and service air compressors would result in the shutdown of both units after this reserve is expended. Loss of system pressure from an accident such as a pipe break would result in the shutdown of both units if the break was not manually isolated before system pressure falls below minimum operating level. At this point, the ACA Systems would provide air to the essential components for safe shutdown.

The control air dryers are divided into three independent units (with two normally in service) each containing a prefilter, dryers, and afterfilter. The control air dryer station is arranged such that any component can be bypassed if necessary, or components of both can be used to make a complete unit.

The SCSA System compressors and dryer units are located on elevation 685.0 in the Turbine Building. This area is not a Class I structure and is below plant grade. Therefore, the SCSA System must be considered inoperable during (or after) a seismic event and flooding above plant grade.

The SCSA System has no safety-related requirement. It normally supplies air to both trains of the ACA System but is automatically isolated from the SCSA System when the air pressure reduces below an acceptable value.

A HELB in containment could result in a consequential break in the SCSA piping. A consequential failure of the SCSA piping inside containment along with a failure to close of the SCSA outboard CIV results in a SCSA leak to the containment.

In the event of the above described accident scenario, operators isolate the SCSA leak on the accident unit by either manually closing a valve upstream of the stuck open CIV or by shutting down the station air compressors. If the station air compressors are shutdown prior to performing an emergency shutdown of the non-accident unit or if an operator error results in an isolation of the control air supply to the non-accident unit, then at-worst, a SAR Condition II event is induced on the non-accident unit.

ACA Systems

The ACA systems are two independent subsystems located on elevation 734.0 of the Auxiliary Building. This is a seismic Class I structure and above maximum possible flood elevation. The two independent auxiliary systems are powered from separate emergency electrical power sources to prevent a single failure or power loss rendering the system inoperable.

The ACA Systems are designed to Class I seismic requirements (except for the piping downstream of the moisture traps and moisture trap bypass isolation valves which is Class I {L}). A single failure cannot render both systems inoperable since they are completely separated.

The auxiliary compressors start automatically upon loss of air from the SCSA System for any reason at a predetermined pressure. The ACA System is automatically isolated from the SCSA System whenever the system pressure falls below a designated pressure. The ACA System is sized and equipped so that ample system capacity is provided for both units under all design basis accident conditions. Redundancy and train separation has been provided in the ACA System to the extent that no initial “design basis event” followed by an arbitrarily selected “single active failure” will prevent the system from performing its necessary safety functions.

Air cylinders, accumulators, and regulators are provided for the steam-driven auxiliary feedwater pump level control valves. These allow the valves to be manually closed during a total loss of all offsite and onsite alternating current power (excluding vital instrument power). The same air cylinders provide a backup manual air source for the turbine driven and motor driven auxiliary feedwater pump control valves that are located inside the West Valve Vault (steam generators 1 and 4).

Air cylinders located above maximum postulated flood level separate from the accumulators are connected to ACA tubing in order to provide the steam-driven auxiliary feedwater pump level control valves and steam generator loop 2 & 3 atmospheric relief valves with compressed air for backup manual control. A safety related TVA Class C 3-Way valve isolates the backup manual control equipment from normally operating ACA system and therefore these air cylinders and associated instrumentation do not affect design basis functions of any other systems.

The auxiliary control air compressor's suction is taken from a nonfiltered area. Calculations were performed to verify that the amount of radioactivity introduced into the main control room habitability area during an accident condition is not significant.

The ACA Systems ensures plant safe shutdown and accident mitigation assuming a failure of the SCSA System and a single failure on one redundant train of the ACA System.

9.3.1.4 Tests and Inspections

All system components were tested prior to plant operation both under normal conditions and simulated accident conditions. Periodic tests are performed to ensure proper operation of the ACA System and isolation valves.

In accordance with Generic Letter 88-14, routine air quality testing and set point verification of moisture elements in the ACA and SCSA Systems are performed.

9.3.1.5 Instrumentation Applications

SCSA System

Local indication is provided at various points in the system for temperature, pressure. Pressure indication is provided in the MCR. Audible alarms are produced in the main control room for low

compressor oil pressure, high oil temperature, and high air pressure for each of the four SCSA compressors. Closure of the service air isolation valve is also annunciated in the control room.

ACA Systems

The auxiliary air compressors are started upon loss of air pressure from the SCSA system. Local position lights give indication upon closure of isolation valves between the SCSA and ACA Systems. Audible alarms are produced in main control room for compressor high air temperature, compressor low oil level, high dewpoint of control air, and low control air pressure. There is local indication of air pressure at various points and in the MCR. The safety-related display instrumentation for Post Accident Monitoring is discussed in Section 7.5.

9.3.2 Process Sampling System

9.3.2.1 Design Basis

The sampling system is designed to obtain samples from the various process systems in each of the two units. The samples are obtained in the secondary chemistry sampling facility, hot sample room, post accident sampling facility, condensate demineralizer building, and locally (grab samples) for laboratory analysis. The waste gas analyzer also obtains samples see Section 11.3. This system has no safety-related functions (except as necessary for containment isolation, SG isolation, etc.). During a Loss-of-Coolant Accident (LOCA), this system is isolated at the containment boundary for these samples which originate within containment. Sampling system discharges are designed to limit flows under normal operation and anticipated malfunctions or failure to preclude any fission product release in excess of the limits stated in 10 CFR 20.

9.3.2.2 System Description

The sampling system consists of the following types of collection areas and equipment:

1. The hot sample room where primary side and steam generator blowdown samples are routed for grab sampling and online analysis. Radioactive grab samples are taken to the radiochemical laboratory for analysis. Selected variables will be monitored by Chemistry in order to detect any that exceed established limits.

2. Local grab samples may be taken throughout the plant for detailed chemical and radiochemical analysis.

3. The Gas Analyzer System monitors the Gaseous Waste Disposal Decay Tanks for hydrogen and oxygen concentrations in a nitrogen atmosphere. The concentrations are indicated and alarmed at the analyzer and waste disposal panel 0-L-2A.

4. Secondary chemistry lab where online Condensate and Feedwater system samples are processed for automatic analysis of several variables such as pH, conductivity (specific and cation), etc.

The liquid sampling system is operated manually throughout the full range of power operations. All sample lines originating within containment have air-operated or solenoid isolation valves near the sample point and inside and outside containment for containment isolation. All sample lines originating outside containment have manual isolation valves, except the volume control tank vent and RHR miniflow lines which have air-operated or solenoid isolation valves. All air-operated or solenoid isolation valve handswitches are located on a wall panel at the hot

sample room. Each sample line to the secondary chemistry lab or hot sample room cubicles has a pressure, a temperature, and a flow indicator. An auxiliary feedwater pump start will close the steam generator blowdown (SGB) isolation valve and the SGB 1 thru 4 sampling isolation valves. Sample lines, whether local or in a sample room have pressure throttling valves and heat exchangers (if required).

SGB samples are rough cooled using RCW in the 690' elevation penetrations room. Local sample stations there will allow the plant to conduct corrosion products monitoring analysis or other local sample operation.

To ensure a representative sample is obtained, sample takeoff points are on or above the centerline of horizontal pipes. Prior to collecting a sample, each sample line is purged according to sample line length and diameter to ensure a representative sample is obtained. The sample volume is dependent on the chemical analysis to be run.

Sample locations are listed in Table 9.3.2-1 for the safety related systems giving the sampled system, sample location, sample type (local, secondary chemistry sampling facility, hot sample room, or gas analyzer). Sufficient secondary side sampling capability exists to ensure secondary side and SG water quality requirements. All sampling lines attached to TVA class A or B systems are class B from the root valve to (but not including) the sampling station, or through the first normally closed valve, or through the second containment isolation valve. Sampling lines attached to TVA class C or D systems are class C from the root valve to (but not including) the sample station, or through the first normally closed valve. Lines and valves forming a part of primary containment isolation are TVA class B. All remaining sample lines are TVA class G or TVA class H. The sample piping and equipment, where applicable, meets the following codes:

a. NEMA SG-5 and IC-1

b. ASME Boiler and Pressure Vessel Code, Section III (applicable sections) and Section IX (applicable sections)

c. ANSI B31.1, B31.7, and B16.5

d. IEEE

e. ASTM

f. SAMA PUB19 and PMC20-2-1970

g. National Electric Code (NFPA 70 ANSI C1)

The hot sample room cubicles must be able to withstand a 1.0 g horizontal force to ensure their stability during a seismic event. Also, the hot sample room cubicle entry block valves meet ASME Section III, Code Class 2, Paragraph NC-3676, with applicable "N" stamp.

The reactor coolant hot leg samples have the capability of being taken during a maximum flood condition.

9.3.2.3 Safety Evaluation

All sample lines have the required indicators, pressure throttling valves, heat exchangers, etc., to ensure plant operator safety when collecting samples.

The hot sample room has the following special safety features (due to handling primary loop samples):

a. For normal operations, samples lines from the RCS hot legs contain a delay coil to provide 40-second sample transit time within containment plus a 20-second transit time from containment to the hot sample cubicles (allows for decay N-16).

b. Hot sample room Cubicles 1A and 2A contain the most highly radioactive fluids. Cubicles 1A and 2A have a 2-inch lead shield behind the front plate of the cubicles. Sample lines to these sinks are equipped with stainless steel sample cylinders.

c. All cubicles are designed to permit collection of a sample behind a shatterproof glass window.

d. All cubicles have individual exhaust hoods and fans equipped with HEPA filters.

e. All entry block valves meet the ASME Section III Code (described in Section 9.3.2.2).

The presence of high pressure and temperature sample lines outside reactor containment is not hazardous because of their limited flow capacity and nonessential nature.

9.3.2.4 Tests and Inspections

Test for this system, covered by the preoperational testing program, were performed before initial plant startup. Periodic inspection and maintenance will be performed after plant operation begins to ensure proper operation of sampling system equipment.

9.3.2.5 Instrumentation Applications

On-line analysis equipment includes the gas analyzer, and the automatic analyzers and/or recorders (conductivity, pH, cation conductivity, sodium, hydrazine, dissolved oxygen) located in the secondary chemistry lab, condensate demineralizer building, and hot sample room sample cubicles as applicable.

9.3.3 Equipment and Floor Drainage System

9.3.3.1 Design Bases - Auxiliary Turbine and Reactor Building

Within the Reactor and Auxiliary Buildings, equipment drains and floor drains were originally designed so that tritiated liquids (defined as liquids whose tritium concentration is 10 percent or more of the reactor water tritium concentration) could be handled separately from nontritiated liquids, insofar as practical. However, segregation of the liquids is not required for processing or recovery.

Equipment drains and floor drains are routed to collector tanks in which the liquid can be held pending further treatment.

Turbine Building drains are collected in the Turbine Building sump or discharged directly to various ponds or CCW discharge. Non-radioactive raw cooling water booster pump skid drains, SGB sample panel drains, and auxiliary feedwater pump leakoff drains are also collected in the Turbine Building sump. The sump level is controlled by a high-low level switch which energizes the sump pumps.

The sump effluents can be routed to the CCW discharge or the yard drainage pond or the low volume waste treatment pond. Oil and chemical wastes are similarily collected and disposed of in an approved manner.

9.3.3.2 System Design - Auxiliary and Reactor Building

The liquid drains can be segregated into two basic systems. The first system primarily collects tritiated water. This system is further divided into aerated liquids, which are collected in the tritiated drain collector tank and deaerated liquids, which are collected in the reactor coolant drain tank or the CVCS holdup tank. The second system primarily collects nontritiated water in the floor drain collector tank, or hot shower tank. The flow diagrams are contained in Figures 9.3.3-1 and 9.3.3-2. The drain sump in the TDAFW pump room collects TDAFW condensate and seal leakoff for routing up to the Turbine Building sump.

9.3.3.2.1 Drains From Lowest Floor Level in the Auxiliary Building

In the Auxiliary Building, most equipment is located at an elevation which permits gravity feed into the desired drain collector tank. However, since the drain collector tanks are located on the lower floors, the drains on the lower floors cannot be gravity fed to a drain collector tank. Therefore, drains on these floor are collected in the AB Floor and Equipment Drain Sump (ABFEDS) and then pumped to a drain collector tank. Only a common sump for both tritiated and nontritiated liquids is provided on this floor. The sump is pumped to the tritiated drain collector tank, or the floor drain collector tank if the water is nontritiated. Pumping nontritiated liquid to the floor drain collection tank is preferred.

9.3.3.2.2 Residual Heat Removal Pump Compartment

Each residual heat removal pump is located in a separate curbed compartment designed to control any leakage. There is a small sump located in each compartment that flows to the ABFEDS. There is a leak detector located in each RHR compartment sump which sounds a flooding alarm. Flooding of the RHR compartment has been evaluated and the maximum flooding condition will have no impact on RHR operation. The source of flooding is due to a crack in the RHR discharge piping in that individual compartment. In this condition the opposite RHR train will remain operable. Additionally there are large blow out panels to the passive sump for large leaks.

9.3.3.2.3 CVCS Holdup Tank Compartment and Tritiated Drain Collector Tank Room

The CVCS holdup tanks are located in separate watertight rooms designed to contain the tank contents should a tank rupture. The tritiated drain collector tank is in a sunken room designed to contain the tank volume should there be a rupture. There is a drain with a normally closed valve from each room to the ABFEDS. In case of a rupture, the valve would keep the water within the room until the additional volume of water could be handled by the drain collection system.

In the Tritiated System, there are both open and closed drains. The open drains are defined as drains being open to the atmosphere and usually empty into a funnel connected to the embedded drain header. The closed drains are connected directly to the drain header and are not open to the atmosphere. All of the embedded drain headers are routed to an 8-inch collection header at the tritiated drain collector tank. The headers have a blind flange at each end to aid in cleaning.

The outlet from the 8-inch collection header to the tritiated drain collector tank is a 4-inch pipe welded to the upper half of the 8-inch pipe. A water seal in the 8-inch pipe is provided at all times. Some equipment drains are piped to the sump tank to ensure gravity flow. The sump tank is pumped to the tritiated drain collector tank.

9.3.3.2.4 Floor Drain Collection Tank

The floor drain collector tank, besides receiving all of the floor drains, also collects nontritiated and nonchromated open and closed equipment drains. These drains are piped to an 8-inch header at the floor drain collector tank where a water seal is maintained at all times. The 8-inch header has a 4-inch pipe welded to the top half which discharges to the floor drain collector tank. The use of floor drains have been limited to areas where an emergency need for them exists.

9.3.3.2.5 Volume Control Tanks

The volume control tanks are located in rooms with a curb to contain the liquid in case of a rupture. A floor drain is provided and piped separately to the floor drain collector tank in order to drain the room as fast as practical.

9.3.3.2.6 Boric Acid Tanks

The boric acid tanks are enclosed by a curb designed to contain the acid should there be a major tank leak. A number of floor drains are located within this area with a valve on the drain header to the floor drain collector tank. This valve permits the containment of the boric acid until it can be pumped by a portable pump to other storage tanks. In case there were no storage tanks available, the acid can be diluted or neutralized if necessary before being released to the floor drain collector tank.

9.3.3.3 Drains - Reactor Building

There are five sumps and one drain tank inside each reactor building, each with a specific purpose.

Containment (RHR) sump: This sump is discussed in detail in Section 6.3.2. It is located inside the polar crane wall and is used to collect large volumes of water from an accident/rupture inside the crane wall for accident mitigation and long term cooling of the core.

Containment Pit (Keyway) sump: This sump has no drain lines leading to it. It collects water below the core from liner leakage and guide tube leakage. This water is then transferred by manual, local operation of a pump located in the raceway, to the Auxiliary Reactor Building Floor & Equipment Drain Sump (Pocket Sump).

Auxiliary Reactor Building Floor & Equipment Drain Sump (ARBFEDS or Pocket Sump): This sump collects drainage from inside the crane wall, containment pit sump, and other miscellaneous drains. Provisions for retaining the ECCS / LOCA inventory inside the crane wall for the containment (RHR) sump is provided.

Reactor Building Floor & Equipment Drain Sump (RBFEDS or Raceway Sump): Drains not sent to the above sumps are piped to this sump. This sump automatically pumps liquid to the Tritiated Drain Collect Tank (TDCT) in the Auxiliary Building. If the liquid is not tritiated it can be pumped to the Floor Drain Collect Tank (FDCT).

Annulus Sump: The annulus floor drains are piped to this small sump which empties by gravity to the Auxiliary Buildings passive sump. A loop seal is provided in the line.

Reactor Coolant Drain Tank (RCDT): Most equipment inside containment contains tritiated, deaerated liquids. These liquids are piped to the reactor coolant drain tank and pumped to the CVCS holdup tanks, or the tritiated drain collection tank in the Auxiliary Building.

9.3.3.4 Design Evaluation

The system design has incorporated features to segregate the drains and contain them in such a manner as to minimize leakage of fluid or fumes to the atmosphere. This has been accomplished with the use of water seals or traps in most drain lines where there is a possibility of cross ventilation. For those areas where seals may not be installed and the possibility exists for cross ventilation, area radiation monitors are located throughout the Auxiliary Building to alert personnel for leaving the area. See Chapter 11 for more indepth evaluation.

9.3.3.5 Tests and Inspections

For those drains containing a water seal or trap where there may be a possibility for significant cross ventilation, periodic monitoring will be performed to ensure seal exists.

9.3.3.6 Instrumentation Application

Instrumentation related to this system is described in Chapter 11, Radioactive Waste Management.

9.3.3.7 Drains - Auxiliary Building

The following tanks are located inside the Auxiliary Building and are used to collect fluids from tritiated and non-tritiated sources.

Chemical Drain Tank (CDT): Collects water mainly from the radiochemical laboratory.
See Chapter 11.

Hot Shower Drain Tank (HSDT): Collect water from the decon hot shower and sink in the service building. See Chapter 11.

CVCS Holdup Tank (RHT): Collects deaerated tritiated reactor grade water from the NSSS.

Auxiliary Building Sump Tank: Collects deaerated tritiated reactor grade water from the NSSS in the west section of the Auxiliary Building, and then pumps it to the TDCT.

Floor Drain Collection Tank (FDCT): Collects non tritiated drainage from equipment and floor drains.

Tritiated Drain Collect Tank (TDCT): Collects areated tritiated water in the Auxiliary Building, via the Drain Header (DH), from the RCDT and Raceway Sump inside containment, and from the auxiliary Building Sump Tank and Passive Tank.

Component Cooling Pump Seal Drain Tank (CCSDT): Collects seal leakage from CCS pumps and returns this leakage to the CCS surge tank.

Turbine-Driven Auxiliary Feed Water Pump Room Sumps (TDAFWP Room Sumps): Collects nontritiated water from the TDAFWP seals and turbine condensate and pumps it to the TB sump.

Auxiliary Building Passive Drain Header (Unit 1): Collects water from the Motor-Driven Auxiliary Feed Water pumps seal drains, the common unit Raw Cooling Water Booster Pumps' skid drains, and the Corrosion Products Monitor drains. A temporary-use manifold allows RADCON-approval drainage (for example, Cycle Outage Ice Melt) to be discharged to the Turbine Building Sump. The header penetrates the Auxiliary/Turbine Building wall connecting to an existing drain (old titration room drain) and travels by gravity to the Turbine Building's Station Sump.

Auxiliary Building Passive Drain Header (Unit 2): Collects water from the Motor-Driven Auxiliary Feed Water pumps seal drains, Corrosion Products Monitor drains, and Steam Generator Blow Down sampling from the Unit 1 and Unit 2 Hot Sample Room's booths including the sampling from the Ion Chromatography Analyzers. A temporary-use manifold allows RADCON-approved drainage (for example, Cycle Outage Ice Melt) to be discharged to the Station Sump. The header connects to the Control Building sump discharge and drains by gravity to the Turbine Building's Station Sump.

Auxiliary Building Floor & Equipment Drain Sump (AB F&E Dr. Sump): Collects tritiated and nontritiated water from some Auxiliary Building floor drains and equipment drains and pumps it to the FDCT.

Auxiliary Building Passive Sump (Passive Sump): Collects water from annulus drain sumps, and blowout panels located in the floors of the pipe chases, and the Containment Spray and RHR pump rooms. This sump drains to the AB F&E Dr. Sump through a normally closed crosstie valve. The passive sump has no pumps for water removal.

9.3.4 Chemical And Volume Control System (CVCS)

The Chemical and Volume Control System (CVCS), shown in Figures 9.3.4-1 through 9.3.4-4 is designed to provide the following services to the Reactor Coolant System (RCS):

1. Maintenance of programmed water level in the pressurizer, i.e., maintain required water inventory in the RCS.

2. Maintenance of seal-water injection flow to the reactor coolant pumps.

3. Control of reactor coolant water chemistry conditions, activity level, soluble chemical neutron absorber concentration and makeup.

4. Option of processing of excess reactor coolant.

5. Emergency core cooling - part of the system is shared with the Emergency Core Cooling System (ECCS). Refer to Section 6.3.

6. Degas the Reactor Coolant System.

9.3.4.1 Design Bases

Quantitative design parameters are given in Table 9.3.4-1 with qualitative descriptions given below. The design codes of the components in the system are given in Section 3.2.

Reactivity Control

The CVCS regulates the concentration of chemical neutron absorber in the reactor coolant to control reactivity changes resulting from the change in reactor coolant temperature between cold shutdown and hot full-power operation, burnup of fuel and burnable poisons, xenon transients, control rod adjustment, and from the buildup of fission products in the fuel.

Reactor Makeup Control

1. The CVCS is capable of borating the RCS through two flow paths and from two boric acid sources.

2. The amount of boric acid stored in the CVCS always exceeds that amount required to borate the RCS to cold shutdown concentration assuming that the control assembly with the highest reactivity worth is stuck in its fully withdrawn position. This amount of boric acid also exceeds the amount required to bring the reactor to hot shut-down and to compensate for subsequent xenon decay.

3. The CVCS is capable of counteracting inadvertent positive reactivity insertion caused by the maximum boron dilution accident (see Chapter 15).

Regulation of Reactor Coolant Inventory

The CVCS maintains the coolant inventory in the RCS within the allowable pressurizer level range for all normal modes of operation including startup from cold shutdown, full power operation and plant cooldown. This system also has sufficient makeup capacity to maintain the minimum required inventory in the event of minor leaks (see SQN "Technical Specifications" for a discussion of maximum allowable RCS Leakage).

The CVCS flow rate is based on the requirement that it permit the RCS to be heated to or cooled from hot standby condition at the design rate and maintain pressurizer level with the operating band.

Reactor Coolant Purification

The CVCS removes fission products, corrosion products, and zinc from the reactor coolant during operation of the reactor. The CVCS can also remove excess lithium from the reactor coolant, keeping the lithium concentration within the desired limits for pH control (see Table 5.2.3-3).

The CVCS is capable of removing fission and activation products, in ionic form or as particulates, from the reactor coolant in order to provide access to those process lines carrying reactor coolant during operation and to reduce activity releases due to leaks.

Chemical Additions for Corrosion Control

The CVCS provides a means for adding chemicals to the RCS which control the pH of the coolant during initial startup and subsequent operation, scavenge oxygen from the coolant during startup, control the oxygen level of the reactor coolant due to radiolysis during all operations subsequent to startup, and modifies the primary system corrosion film layer.

The CVCS is capable of maintaining the oxygen content and pH of the reactor coolant within limits specified on Table 5.2.3-3.

Seal Water Injection

The CVCS is able to supply filtered water to each reactor coolant pump seal, as required by the reactor coolant pump design.

Emergency Core Cooling

The centrifugal charging pumps in the CVCS also serve as the high-head safety injection pumps in the ECCS. Other than the centrifugal charging pumps and associated piping and valves, the CVCS is not required to function during a loss-of-coolant accident, LOCA. During a LOCA, the CVCS is isolated except for the centrifugal charging pumps, its miniflow, and the piping in the safety injection and seal injection flow paths.

9.3.4.2 System Description

The CVCS is shown in Figures 9.3.4-1 through 9.3.4-4 with system design parameters listed in Table 9.3.4-1. The CVCS consists of several subsystems: the charging, letdown and seal water system; the chemical control, purification and makeup system.

9.3.4.2.1 Charging, Letdown and Seal Water System

The charging and letdown functions of the CVCS are employed to maintain a programmed water level in the RCS pressurizer, thus maintaining proper reactor coolant inventory during all phases of plant operation. This is achieved by means of a feed and bleed process during which the feed rate is automatically controlled based on pressurizer water level. The bleed rate can be chosen to suit various plant operational requirements by selecting the proper combination of letdown orifices in the letdown flow path.

Reactor coolant is discharged to the CVCS from the reactor coolant loop piping between the reactor coolant pump and the steam generator; it then flows through the shell side of the regenerative heat exchanger where its temperature is reduced by heat transfer to the charging flow passing through the tubes. The coolant then experiences a large pressure reduction as it passes through the letdown orifice(s) and flows through the tube side of the letdown heat exchanger where its temperature is further reduced to the operating temperature of the mixed bed demineralizers (< 140°F) by component cooling water. Downstream of the letdown heat exchanger a second pressure reduction occurs. This second pressure reduction is performed by the low pressure letdown valve, the function of which is to maintain upstream pressure to prevent flashing downstream of the letdown orifices.

The coolant normally flows through one of the mixed bed demineralizers. The flow may then pass through the cation bed demineralizer which is used intermittently when additional purification or chemical control of the reactor coolant is required.

The coolant then flows through the reactor coolant filter and into the volume control tank through a spray nozzle in the top of the tank. The gas space in the volume control tank is filled with hydrogen. The partial pressure of hydrogen in the volume control tank determines the concentration of hydrogen dissolved in the reactor coolant.

The charging pumps normally take suction from the volume control tank and return the cooled, purified reactor coolant to the RCS through the charging line. Normal charging flow is handled by one of the two charging pumps. The bulk of the charging flow is pumped back to the RCS through the tube side of the regenerative heat exchanger. The letdown flow in the shell side of the regenerative heat exchanger raises the charging flow to a temperature approaching the reactor coolant temperature. The flow is then injected into a cold leg of the RCS. Two charging

paths are provided from a point downstream of the regenerative heat exchanger with air operated valves. A flow path is also provided from the regenerative heat exchanger outlet to the pressurizer spray line. An air operated valve in the spray line is employed to provide auxiliary spray to the vapor space of the pressurizer. This provides a means of depressurization near the end of plant cooldown, when the reactor coolant pumps are not operating and as required in emergency procedures.

A portion of the charging flow is directed to the reactor coolant pumps (normally 8 gpm per pump) through a seal water injection filter. It is injected between the pump shaft bearings and the thermal barrier cooling coil. Here the flow splits and a portion (normally 5 gpm per pump) enters the RCS around the thermal barrier. The remainder of the flow is directed up the pump shaft cooling the lower bearing, and to the No. 1 seal leakoff. The No. 1 seal leak-off flow discharges to a common manifold, joins the excess letdown piping, exits from the containment, and then passes through the seal water return filter and the seal water heat exchanger to the suction side of the charging pumps, or by alternate path to the volume control tank. A very small portion of the seal flow leaks through to the No. 2 seal. The No. 2 seal is provided with a stand pipe for back pressure. A No. 3 seal provides a final barrier to leakage to containment atmosphere. The No. 2 seal stand pipe flows are discharged to the reactor coolant drain tank in the Waste Disposal System. The No. 3 seal leak-off flows are discharged to the containment floor and equipment drain sump.

An alternate letdown path from the RCS is provided in the event that the normal letdown path is inoperable or pressure is low enough that adequate flow cannot be obtained through the letdown orifice. Reactor coolant can be discharged from a cold leg to flow through the tube side of the excess letdown heat exchanger where it is cooled by component cooling water. Downstream of the heat exchanger a remote-manual control valve controls the letdown flow. The flow normally joins the No. 1 seal discharge manifold and passes through the seal water return filter and heat exchanger to the suction side of the charging pumps. The excess letdown flow can also be directed to the reactor coolant drain tank. Under normal conditions when the normal letdown line is not available, the normal purification path is also not in operation. Therefore, this alternate condition would allow continued power operation for a limited period of time, dependent on RCS chemistry and activity, while RCP seal injection continues. The excess letdown flow path is also used to provide additional letdown capability during the final stages of plant heatup. This path removes some of the excess reactor coolant due to expansion of the system as a result of the RCS temperature increase.

Surges in RCS inventory due to load changes are accommodated for the most part in the pressurizer. The volume control tank provides surge capacity for reactor coolant expansion not accommodated by the pressurizer. If the water level in the volume control tank exceeds the normal operating range, a controller in the DCS modulates a three way valve downstream of the reactor coolant filter to divert a portion of the letdown to the holdup tanks. If the high-level limit in the volume control tank is reached, an alarm is actuated in the control room and the entire letdown flow is automatically diverted to the holdup tanks.

Low level in the volume control tank initiates makeup from the reactor makeup control system. The reactor makeup control system is contained within the plant Distributed Control System (DCS). At a lower level, an alarm is actuated in the control room. If the reactor makeup control system does not supply sufficient makeup to keep the volume control tank level from falling to a lower level, an emergency low level signal from both level controllers causes the suction of the charging pumps to be transferred to the refueling water storage tank.

An electrical interlock exists so that upon spurious closure of either volume control tank outlet valve, the opposite train refueling water storage tank valve will automatically open to provide suction flow to the centrifugal charging pumps in order to prevent damage to the centrifugal charging pump resulting from a loss of suction flow.

9.3.4.2.2 Chemical Control, Purification and Makeup System

pH Control

The pH control chemical employed is lithium hydroxide. This chemical is chosen for its compatibility with the materials and water chemistry of borated water/stainless steel/zirconium/inconel systems. In addition, lithium is produced in the core region due to irradiation of the dissolved boron in the coolant.

The concentration of lithium in the RCS is maintained in the range specified for pH control Section 5.2.3. If the concentration exceeds this range, as it may during the early stages of a core cycle, the cation bed demineralizer is employed in the letdown line in series operation with a mixed bed demineralizer. Since the amount of lithium to be removed is small and its buildup can be readily calculated, the flow through the cation bed demineralizer is not required to be full letdown flow. If the concentration of lithium is below the specified limits, lithium hydroxide can normally be introduced into the RCS via the chemical mixing tank and charging flow.

Oxygen Control

During reactor startup and shutdown, hydrazine may be employed as an oxygen scavenging agent. The hydrazine solution is introduced into the RCS in the chemical mixing tank, and may be introduced via the RHR system during shutdown.

Dissolved hydrogen is employed to control and scavenge oxygen produced due to radiolysis of water in the core region. Sufficient partial pressure of hydrogen is maintained in the volume control tank such that the specified equilibrium concentration of hydrogen is maintained in the reactor coolant. A pressure control valve can be adjusted to provide the correct equilibrium hydrogen concentration in the volume control tank.

Reactor Coolant Purification

Mixed bed demineralizers are provided in the letdown line to provide cleanup of the letdown flow. The demineralizers remove ionic corrosion, fission, activation products, and zinc. Typically, one demineralizer is maintained in continuous service and can be supplemented intermittently by the cation bed demineralizer, if necessary, for additional purification. The cation resin removes principally cesium isotopes and lithium from the purification flow. The second mixed bed demineralizer serves as a standby unit for use if the operating demineralizer becomes exhausted during operation. The demineralizers are automatically isolated on high letdown temperature.

During RHR shutdown operation, cleanup flow from the Residual Heat Removal System is supplied to the letdown line upstream of the letdown heat exchanger. The flow passes through the letdown heat exchanger, a mixed bed demineralizer, and the reactor coolant filter to the volume control tank. The fluid is then returned to the Reactor Coolant System via the normal charging route. To accelerate shutdown cleanup letdown and associated charging flow may be increased beyond the normal flow rates (see Table 9.3.4-1). Alternately, the RHR cleanup flow can be diverted to the holdup tanks in the CVCS letdown path.

Filters are provided at various locations to ensure filtration of particulate and resin fines and to protect the seals on the reactor coolant pumps.

Fission gases and hydrogen are removed from the system for plant shutdown via the volume control tank to the Waste Disposal System.

Chemical Shim and Reactor Coolant Makeup

The soluble neutron absorber (boric acid) concentration and the reactor coolant inventory are controlled by the reactor makeup control system. In addition, for emergency boration and makeup, the capability exists to provide refueling water or boric acid directly to the suction of the charging pump.

The boric acid is stored in three boric acid tanks (shared between both units). Four boric acid transfer pumps are provided, two per unit. One pump of each pair is aligned with one boric acid tank and normally runs continuously to provide recirculation of the boric acid tank. One of the second pumps of each pair is aligned with the third boric acid tank and recirculates with service being transferred as operation requires. Manual or automatic initiation of the reactor makeup control system activates high speed operation of the inservice pump to provide makeup of boric acid solution as required.

The primary makeup water pumps, taking suction from the primary makeup water storage tank, are employed for various makeup and flushing operations. Normally, a primary makeup water pump runs continuously and provides flow to the boric acid blender as needed.

The flow from the boric acid blender is directed to either the suction manifold of the charging pumps or the volume control tank through the letdown line and spray nozzle.

During reactor operation, changes are made in the reactor coolant boron concentration for the following conditions:

1. Reactor startup - boron concentration must be decreased from shutdown concentration to achieve criticality and maintain T-average on program.

2. Load follow - boron concentration may be either increased or decreased to adjust T-average and compensate for the xenon transient following a change in load.

3. Fuel burnup - boron concentration must be decreased to compensate for fuel burnup and the buildup of fission products in the fuel.

4. Cold shutdown - boron concentration must be increased to the cold shutdown concentration.

The reactor makeup control system consists of a group of instruments arranged to provide a manually pre-selected makeup composition to the charging pump suction header or the volume control tank. The makeup control functions are those of maintaining desired operating fluid inventory in the volume control tank and adjusting reactor coolant boron concentration for reactivity control.

1. Automatic Makeup

   The "automatic makeup" mode of operation of the reactor makeup control system provides boric acid solution preset to match the boron concentration in the RCS. The automatic

makeup compensates for minor leakage of reactor coolant without causing significant changes in the coolant boron concentration.

Under normal plant operating conditions, the mode selector switch and makeup stop valves are set in the "automatic makeup" position. A preset low level signal from the volume control tank level controller (contained within the DCS) causes the automatic makeup control action to switch a boric acid transfer pump to high speed operation, open the makeup stop valve to the charging pump suction, open the boric acid control valve and the primary makeup water control valve. Since a primary water pump runs continuously, automatic starting of this pump is not required. The flow controllers (also contained within the DCS) then blend the makeup stream according to the preset concentration. Makeup addition to the charging pump suction header causes the water level in the volume control tank to rise. At a preset high level point, the makeup is stopped, the primary makeup water control valve closes, and the makeup stop valve to charging pump suction closes. The boric acid transfer pump can then be manually returned to low speed operation.

If the automatic makeup fails or is not aligned for operation and the tank level continues to decrease, a low level alarm is actuated. Manual action may correct the situation or, if the level continues to decrease, an emergency low level signal from both channels opens the valves in the refueling water supply line to the charging pumps and closes the valves in the volume control tank outlet line.

2. Dilution

The "dilute" mode of operation permits the addition of a preselected quantity of primary makeup water at a pre-selected flow rate to the RCS. The operator sets the mode selector switch to "dilute", the primary makeup water flow controller set point to the desired flow rate, the primary water batch integrator (contained within the DCS) to the desired quantity and initiates system start. This opens the primary makeup water control valve to the volume control tank. The operating primary makeup water pump then delivers water to the volume control tank. From here the water goes to the charging pump suction header. Excessive rise of the volume control tank water level is prevented by automatic actuation (by the tank level controller) of a three-way diversion valve which routes the reactor coolant letdown flow to the holdup tanks. When the preset quantity of water has been added, the batch integrator causes the control valve to close.

3. Alternate Dilution

The "alternate dilute" mode of operation is similar to the dilute mode except a portion of the dilution water flows directly to the charging pump suction and a portion flows into the volume control tank via the spray nozzle and then flows to the charging pump suction.

4. Boration

The "borate" mode of operation permits the addition of a preselected quantity of boric acid solution at a preselected flow rate to the RCS. The operator sets the mode selection switch to "borate", the boric acid flow controller set point to the desired flow rate, the boric acid batch integrator (contained within the DCS) to the desired quantity, and initiates system start.
This opens the makeup stop valve to the charging pumps suction

and switches the boric acid transfer pump to high speed operation, which delivers boric acid solution to the charging pumps' suction header.

The total quantity added in most cases is so small that it has only a minor effect on the volume control tank level. When the preset quantity of boric acid solution is added, the batch integrator closes the makeup valve to the suction of the charging pumps. The boric acid transfer pump can be returned to low speed operation.

5. Manual

The "manual" mode of operation permits the addition of a preselected quantity and blend of boric acid solution to the volume control tank (VCT), refueling water storage tank, to the holdup tanks, or to some other location via a temporary connection. While in the manual mode of operation, automatic makeup to the RCS is precluded. With the exception of the VCT, the discharge flow path must be aligned by opening manual valves in the desired path.

The operator then sets the mode selector switch to "manual", the boric acid and primary makeup water flow controllers to the desired flow rates, the boric acid and primary makeup water batch integrators to the desired quantities and actuates the makeup start switch. The start switch actuates the boric acid flow control valve and the primary makeup water flow control valve to the boric acid blender and switches the boric acid transfer pump to high speed operation. One primary makeup water pump runs continuously.

When the preset quantities of boric acid and primary makeup water have been added, the boric acid and primary makeup water flow control valves close. This operation may be stopped manually by actuating the makeup stop switch. The boric acid pump can then be manually returned to low speed operation.

If either batch integrator is satisfied before the other has recorded its required total, the pump and valve associated with the integrator which has been satisfied will terminate flow. The flow controlled by the other integrator will continue until that integrator is satisfied.

6. Alarm Functions

The reactor makeup control is provided with alarm functions to call the operator's attention to the following conditions:

a) Deviation of primary makeup water flow rate from the control set point.

b) Deviation of boric acid flow rate from control set point.

c) High level in the volume control tank. This alarm indicates that the level in the tank is approaching high level and a resulting 100 percent diversion of the letdown stream to the holdup tanks.

d) Low level in the volume control tank. This alarm indicates that the level in the tank is approaching the emergency low level which will result in realignment of charging pump suction to the refueling water storage tank.

9.3.4.2.3 Boron Recovery System

The boron recovery system collects borated water that results from the following plant operations for both units. In each of these operations, the excess reactor coolant is diverted from the letdown line to the holdup tanks as a result of high volume control tank level.

1. Dilution of reactor coolant to compensate for core burnup

2. Load follow

3. Hot shutdowns and startups

4. Cold shutdowns and startups

5. Refueling shutdown and startup.

Excess liquid effluents containing boric acid flow from the RCS through the letdown line and are collected in the holdup tanks. As liquid enters the holdup tanks, the nitrogen cover gas is displaced to the gas decay tanks in the Waste Disposal System through the waste gas vent header. The concentration of boric acid in the holdup tanks may vary throughout core life from the refueling concentration to essentially zero at the end of the core cycle. A holdup tank recirculation pump is provided to transfer liquid from one holdup tank to another.

Liquid effluent in the holdup tanks can be processed by the liquid radwaste system as discussed in Chapter 11.

9.3.4.2.4 Layout

The volume control tank is located above the charging pumps to provide sufficient net positive suction head (NPSH). All parts of the charging and letdown system are shielded as necessary to limit dose rates during operation with one percent fuel defects assumed. The regenerative heat exchanger, excess letdown heat exchanger, letdown orifices, and seal bypass orifices are located within the reactor containment. All other system equipment is located inside the auxiliary building.

9.3.4.2.5 Component Description

A summary of principal component design parameters is given in Table 9.3.4-2 and design codes are given in Section 3.2.

All CVCS piping that handles radioactive liquid is austenitic stainless steel. All piping joints and connections are welded, except where flanged connections are required to facilitate equipment removal for maintenance and hydrostatic testing.

Charging Pumps

Two charging pumps are supplied to inject coolant into the RCS and RCP seals. The pumps are of the single speed, horizontal, centrifugal type. There is a minimum flow recirculation line to protect the centrifugal charging pumps from a closed discharge valve condition. Charging flow rate is determined from a pressurizer level signal. The means of flow control is accomplished by

a modulating valve on the discharge side of the centrifugal pumps. The centrifugal charging pumps also serve as high head safety injection pumps in the Emergency Core Cooling System. All parts in contact with the reactor coolant are fabricated of austenitic stainless steel or other material of adequate corrosion resistance. The pump logic is shown in Figure 9.3.4-5.

Boric Acid Transfer Pumps

Two horizontal, centrifugal, two speed pumps with mechanical seals are supplied for each unit. One pump of each pair is aligned with one boric acid tank and runs continuously to provide recirculation of the boric acid system, and boric acid tank. A second pump is aligned with the third boric acid tank and runs continuously to provide recirculation. The other is considered a standby pump. Manual or automatic initiation of the reactor makeup control system will activate both of the running pumps for that unit to the higher speed to provide normal makeup of boric acid solution as required. For emergency boration, supplying boric acid solution to the suction of the charging pump can be accomplished by manually actuating one or two pumps. The transfer pumps also function to transfer boric acid solution from the batching tank to the boric acid tanks. In addition to the automatic actuation by the makeup control system, and manual actuation from the main control board, these pumps may also be controlled locally. The pump logic is shown in Figure 9.3.4-6.

All parts in contact with the boric acid solution are of austenitic stainless steel.

Gas Stripper Feed Pumps

Gas stripper feed pump A or B transfers the HUT contents to the tritiated drain collector tank via the drains or vents of the evaporator feed ion exchange beds or evaporator feed filters. Additionally, the gas stripper feed pumps can be utilized to supply water directly to the RAD DI, and provide flushing of piping prior to transferring water from the Holdup Tanks to the refueling transfer canal for refueling. The third pump (C) is a standby and is available for operation in the event either operating pump malfunctions. These centrifugal pumps are constructed of austenitic stainless steel.

Holdup Tank Recirculation Pump

The recirculation pump is used to mix the contents of a holdup tank for sampling or to transfer the contents of a holdup tank to another holdup tank. The pump is the centrifugal type, manually actuated, with all wetted surfaces constructed of austenitic stainless steel.

Monitor Tank Pumps

The two monitor tank pumps discharge water from the monitor tank. The pumps are constructed of austenitic stainless steel.

Regenerative Heat Exchanger

The regenerative heat exchanger is designed to recover heat from the letdown flow by reheating the charging flow, which reduces thermal shock on the charging penetrations into the reactor coolant loop piping.

The letdown stream flows through the shell of the regenerative heat exchanger and the charging stream flows through the tubes. The unit is constructed of austenitic stainless steel, and is of all welded construction.

The temperatures of both outlet streams from the heat exchanger are monitored with indication in the control room. A high temperature alarm is provided on the main control board if the temperature of the letdown stream exceeds desired limits.

Letdown Heat Exchanger

The letdown heat exchanger cools the letdown stream to the operating temperature of the mixed bed demineralizers. Reactor coolant flows through the tube side of the exchanger while component cooling water flows through the shell side. All surfaces in contact with the reactor coolant are austenitic stainless steel, and the shell is carbon steel.

The low pressure letdown valve, located downstream of the heat exchanger, maintains the pressure of the letdown flow sufficiently high to prevent two phase flow.

The letdown temperature control indicates and controls the temperature of the letdown flow exiting from the letdown heat exchanger. The temperature sensor, which is part of the CVCS, provides input to the valve controller in the Component Cooling System. The letdown exit temperature is controlled by regulating the component cooling water flow through the letdown heat exchanger. Temperature indication is provided on the main control board. These controls reside in the DCS.

Excess Letdown Heat Exchanger

The excess letdown heat exchanger cools reactor coolant letdown flow equivalent to the nominal seal injection flow which flows downward into the reactor coolant pump system.

The excess letdown heat exchanger can be utilized when normal letdown is temporarily out of service or it can be used to supplement letdown during heatup. The letdown flows through the tube side and component cooling water is circulated through the shell side of the heat exchanger. All surfaces in contact with reactor coolant are austenitic stainless steel and the shell is carbon steel. All tube joints are welded.

A temperature detector measures the temperature of excess letdown downstream of the excess letdown heat exchanger. Temperature indication and high temperature alarm are provided on the main control board.

A pressure sensor indicates the pressure of the excess letdown flow downstream of the excess letdown heat exchanger and excess letdown control valve. Pressure indication is provided on the main control board.

Seal Water Heat Exchanger

The seal water heat exchanger is designed to cool fluid from three sources: reactor coolant pump seal water returning to the CVCS, reactor coolant discharged from the excess letdown heat exchanger, and centrifugal charging pump mini flow. Reactor coolant flows through the tube side of the heat exchanger and component cooling water is circulated through the shell

side. The design flow rate is equal to the sum of the excess letdown flow, maximum design reactor coolant pump seal leakage, and mini flow from one centrifugal charging pump. The unit is designed to cool the above flow to the temperature normally maintained in the volume control tank. All surfaces in contact with reactor coolant are austenitic stainless steel and the shell is carbon steel.

Volume Control Tank

The volume control tank provides surge capacity for part of the reactor coolant expansion volume not accommodated by the pressurizer. When the level in the tank reaches the high level setpoint, the remainder of the expansion volume is accommodated by diversion of the letdown stream to the holdup tanks. It also provides a means for introducing hydrogen into the coolant to maintain the required equilibrium concentration of hydrogen and is used for degassing the reactor coolant. It also serves as a head tank for the charging pumps.

A spray nozzle located inside the tank on the letdown line nozzle provides liquid to gas contact between the incoming fluid and the hydrogen atmosphere in the tank.

For degassing, the tank is provided with a remote operated solenoid valve backed up by a pressure control valve in series which ensures that the tank pressure does not fall below minimum operating pressure during degassing to the Waste Disposal System. Relief protection, gas space sampling, and nitrogen purge connections are also provided.

Volume control tank pressure and temperature are monitored with indication given in the control room. Alarm is given in the control room for high and low pressure conditions and for high temperature.

Two level channels govern the water inventory in the volume control tank. These channels provide local and remote level indication, level alarms, level control, makeup control, and emergency makeup control.

If the volume control tank level rises above the normal operating range, one channel provides an analog signal to a proportional controller which modulates the three-way valve downstream of the reactor coolant filter to maintain the volume control tank level within the normal operating band. The three-way valve can split letdown flow so that a portion goes to the holdup tanks and a portion to the volume control tank. This proportional controller is contained within the DCS.

If the modulating function of the valve fails and the volume control tank level continues to rise, the high level alarm will alert the operator to the malfunction and the letdown flow can be manually diverted to the holdup tanks. If no action is taken by the operator and the tank level continues to rise, the full letdown flow will be automatically diverted.

During normal power operation, a low level in the volume control tank initiates auto makeup which injects a pre-selected blend of boron and water into the charging pump suction header. When the volume control tank is restored to normal, auto makeup stops.

If the automatic makeup fails or is not aligned for operation or the tank level continues to decrease, a low level alarm is actuated. Manual action may correct the situation or, if the level continues to decrease, an emergency low level signal from both level channels opens the stop valves in the refueling water supply line and closes the stop valves in the volume control tank outlet line.

Boric Acid Tanks

Three boric acid tanks are shared by Units 1 and 2. One tank supplemented by additional makeup from either: (1) the common boric acid tank and/or batching, or (2) borated water from the refueling water storage tank, provides sufficient boric acid solution for cold shutdown of one unit even if the most reactive control rod is not inserted. One tank supplies boric acid for each reactor coolant makeup system during normal operation, while the third tank serves as a spare.

The concentration of boric acid solution in storage is maintained between 3.5 and 4.0 percent by weight. Periodic manual sampling and corrective action, if necessary, insures that these limits are maintained. As a consequence, measured amounts of boric acid solution can be delivered to the reactor coolant to control the chemical poison concentration. The combination overflow and breather vent connection has an in-line HEPA filter to trap off-gas radioactive particulates before ducting into the auxiliary building exhaust.

Two 100 percent capacity electric immersion heaters in each boric acid tank are normally de-energized and available when the Auxiliary Building temperature drops. The immersion heaters are manually controlled at local panels. The heaters are sheathed in austenitic stainless steel. The solubility limit for 4.0 weight percent boric acid is reached at a temperature of 58 degrees F. This temperature is sufficiently low that the normally expected ambient temperatures within the auxiliary building will maintain boric acid solubility.

A temperature detector provides temperature measurement of each tank's contents. Local temperature indication is provided and high and low temperature alarms are indicated on the main control board.

A level detector indicates the level in each boric acid tank. Level indication with high, and low level alarms is provided on the main control board. The low level alarm is set to provide a margin to the base of the tank, which provides suction head to the boric acid transfer pumps.

Batching Tank

The batching tank is used for mixing a makeup supply of boric acid solution for transfer to the boric acid tanks. The tank may also be used for solution storage.

A local sampling point is provided for verifying the solution concentration prior to transferring. The tank is provided with an agitator to improve mixing during batching operations and an electric heater for heating the boric acid solution. Some heating of the pure water may be required.

Chemical Mixing Tank

The primary use of the chemical mixing tank is in the addition of lithium hydroxide solutions for pH control and hydrazine solution for oxygen scavenging.

Holdup Tanks

Two holdup tanks are shared between Units 1 and 2. The holdup tanks hold radioactive liquid which enters from the letdown line and other primary side sources. The liquid is released from the RCS during startup, shutdowns, load changes, and from boron dilution to compensate for

burnup. The tanks can also be utilized as a source of water for the refueling canal to support maintenance and refueling activities. When it is necessary to empty the fuel transfer canal, one of the tanks can be used to store the canal water.

Monitor Tank

The monitor tank accumulates liquid from the Waste Disposal System for sampling. After sampling, the condensate can be pumped to allow processing, pumped to the holdup tanks, to the primary water storage tank, or to the environment.

Mixed Bed Demineralizers

Two flushable mixed bed demineralizers assist in maintaining reactor coolant purity. A hydrogen-form or lithium-form cation resin and hydroxyl form anion resin are charged into the demineralizers. The anion resin is converted to the borate form in operation. Both types of resin remove fission and corrosion products. The resin bed is designed to reduce the concentration of ionic isotopes in the purification stream, except for cesium, yttrium and molybdenum, by a minimum factor of 10.

Each demineralizer has sufficient capacity for approximately one core cycle with one percent of the rated core thermal power being generated by defective fuel rods. One demineralizer serves as a standby unit for use if the operating demineralizer becomes exhausted during operation.

A temperature sensor measures temperature of the letdown flow downstream of the letdown heat exchanger and controls the letdown flow to the mixed bed demineralizers by means of a three-way valve. If the letdown temperature exceeds the allowable resin operating temperature, the flow is automatically bypassed around the demineralizers to the VCT. Temperature indication and high alarm are provided on the main control board. The air operated three-way valve failure mode directs flow to the volume control tank.

Cation Bed Demineralizer

A flushable cation resin bed in the hydrogen form is located downstream of the mixed bed demineralizers and is used intermittently to control the concentration of Li^7 which builds up in the coolant from the B10 (n, α) Li^7 reaction. The demineralizer also has sufficient capacity to maintain the Cesium-137 concentration in the coolant below 1.0 μCi/cc with one percent of the rated core thermal power being generated by defective fuel. The resin bed is designed to reduce the concentration of ionic isotopes, particularly cesium, yttrium, and molybdenum by a minimum factor of 10.

The cation bed demineralizer has sufficient capacity for approximately one core cycle with one percent of the rated core thermal power being generated by defective fuel rods.

Reactor Coolant Filter

The reactor coolant filter is located in the letdown line, upstream of the volume control tank. The filter collects resin fines and particulates from the letdown stream. The nominal flow capacity of the filter is greater than the maximum purification flow rate.

Two local pressure indicators are provided to show the pressures upstream and downstream of the reactor coolant filter and thus provide filter differential pressure.

Seal Water Injection Filters

Two seal water injection filters are located in parallel in a common line to the reactor coolant pump seals to collect particulate matter that could be harmful to the seal faces. Each filter is sized to accept flow in excess of the normal seal water flow requirements.

A differential pressure indicator monitors the pressure drop across each seal water injection filter and gives local indication with high differential pressure alarm on the main control board.

Seal Water Return Filter

The filter collects particulates from the reactor coolant pump seal water return and from the excess letdown flow. The filter is designed to pass flow in excess of the sum of the excess letdown flow and the maximum design leakage from the reactor coolant pump seals.

Two local pressure indicators are provided to show the pressures upstream and downstream of the filter and thus provide the differential pressure across the filter.

Boric Acid Filter

The boric acid filter, when aligned, collects particulates from the solution being pumped to the charging pump suction or boric acid blender. The filter is designed to pass the design flow of two boric acid transfer pumps operating simultaneously. Local pressure indicators indicate the pressure upstream and downstream of the boric acid filter and thus differential pressure. A bypass alignment is provided in the event the boric acid filter is unavailable.

Boric Acid Blender

The boric acid blender promotes mixing of boric acid solution and primary makeup water for the reactor coolant makeup circuit. The blender consists of a conventional pipe-tee. A sample point is provided in the piping just downstream of the blender.

Letdown Orifices

The three letdown orifices are arranged in parallel and serve to reduce the pressure of the letdown stream to a value compatible with the letdown heat exchanger design. Two of the three are sized such that either can pass normal letdown flow. One or both standby orifices may be used with the normally operating orifice in order to increase letdown flow such as during reactor heatup operations or maximum purification. This arrangement also provides a full standby capacity for control of letdown flow. Orifices are placed in and taken out of service by remote manual operation of their respective isolation valves.

A flow monitor provides indication in the control room of the letdown flow rate and high flow alarm to indicate unusually high flow.

A low pressure letdown controller controls the pressure downstream of the letdown orifice to prevent flashing of the letdown liquid. Pressure indication and high pressure alarm are provided on the main control board. This letdown pressure controller is contained within the DCS.

Temperature Monitoring

Thermocouples are provided at various locations in the Auxiliary Building to monitor the ambient air temperature. The air temperature is representative of the temperature of the boric acid solution which operates at ambient temperatures. These thermocouples are run to a local recorder that has an alarm in the control room in the event that the ambient conditions begin to approach the solubility temperature of the boric acid solution.

Valves

Valves, other than diaphragm valves, that perform a modulating function are equipped with a stuffing box containing two sets of packing and an intermediate leakoff connection or a set of packing without an intermediate leakoff connection. Valves are normally installed such that, when closed, the high pressure is not on the packing. Basic material of construction is stainless steel for all valves which handle radioactive liquid or boric acid solution.

Isolation valves are provided for all lines entering the reactor containment. See Subsection 6.2.4.

Relief valves are provided for lines and components that might be pressurized above design pressure by improper operation or component malfunction.

1. Charging Line Downstream of Regenerative Heat Exchanger

   If the charging side of the regenerative heat exchanger is isolated while the hot letdown flow continues at its maximum rate, the volumetric expansion of coolant on the charging side of the heat exchanger is relieved to the Reactor Coolant System through a spring loaded check valve. The spring in the valve is designed to permit the check valve to open in the event that the differential pressure exceeds the design pressure differential.

2. Letdown Line Downstream of Letdown Orifices

   The pressure relief valve downstream of the letdown orifices protects the low pressure piping and the letdown heat exchanger from overpressure when the low pressure piping is isolated. The capacity of the relief valve exceeds the maximum flow rate through all letdown orifices. The valve set pressure is equal to the design pressure of the letdown heat exchanger tube side.

3. Letdown Line Downstream of Low Pressure Letdown Valve

   The pressure relief valve downstream of the low pressure letdown valve protects the low pressure piping, demineralizers, and filter from overpressure when this section of the system is isolated. The capacity of the relief valve exceeds the maximum flow rate through all letdown orifices. The valve set pressure is equal to the design pressure of the demineralizers.

4. Volume Control Tank

   The relief valve on the volume control tank permits the tank to be designed for a lower pressure than the upstream equipment. This valve has a capacity equal to the summation of the following items: maximum letdown, normal seal water return, excess letdown, maximum flow from one RCP floating ring seal, and nominal flow from one primary water pump. The valve set pressure equals the design pressure of the volume control tank.

5. Charging Pump Suction

   A relief valve on the charging pump suction header relieves pressure that may build up if the suction line isolation valves are closed or if the system is overpressurized. The valve set pressure is equal to the design pressure of the associated piping and equipment.

6. Seal Water Return Line (Inside Containment)

   This relief valve is designed to relieve overpressurization in the seal water return piping inside the containment if the motor-operated isolation valve is closed. The valve is designed to relieve the total leakoff flow from the No. 1 seals of the reactor coolant pumps plus the design excess letdown flow.

7. Seal Water Return Line (Charging Pumps Bypass Flow)

   This relief valve protects the seal water heat exchanger and its associated piping from overpressurization. If either of the isolation valves for the heat exchanger are closed and if the bypass line is closed, the piping could be overpressurized by the bypass flow from the centrifugal charging pumps. The valve is sized to handle the full bypass flow with all centrifugal pumps running. The valve is set to relieve at the design pressure of the heat exchanger.

Piping

All Chemical and Volume Control System piping handling radioactive liquid is austenitic stainless steel. All piping joints and connections are welded, except where flanged connections are required to facilitate equipment removal for maintenance and hydrostatic testing.

Resin Fill Tank

The resin fill tank is used to charge fresh resin to the demineralizers. The tank has a conical bottom connected to a line with a dump valve. This line may be connected to the fill line of the demineralizer being serviced. Demineralized water is added to the tank to produce a resin slurry which can then be sluiced from the tank into a demineralizer by opening the dump valve.

Chemical Mixing Tank Orifice

An orifice is provided in the piping upstream of the mixing tank. This orifice limits the flow rate through the tank to 2 gpm to avoid slugging the pump seals with concentrated chemicals.

Boric Acid Tank Orifice

Each boric acid tank orifice is designed to pass the minimum flow required to provide sufficient recirculation through the piping and tanks with the transfer pumps. The orifice is constructed of austenitic stainless steel.

Seal Water Return Bypass Orifice

An orifice in each reactor coolant pump No. 1 seal-bypass line may be placed in service only during startup or shutdown, when the reactor coolant system pressure is low and temperature limits are being approached on the No.1 seal and/or pump radial bearing. The bypass flow is necessary to ensure adequate flow for cooling of the pump's lower radial bearing. The orifice is a plug-type, constructed of austenitic stainless steel and designed to pass adequate flow at the differential pressure corresponding to the lowest reactor coolant system pressure allowable for pump operation.

Reactor Coolant Pump Seal Standpipe

The standpipes maintain a head of water between the No. 2 and 3 seals of the reactor coolant pumps to control leakage from the reactor coolant pumps.

9.3.4.2.6 System Operation

Reactor Startup

Reactor startup is defined as the operations which bring the reactor from cold shutdown to normal operating temperature and pressure. The following provides a typical sequence of events. The exact startup sequence will vary depending on the shutdown conditions.

It is assumed that:

1. Normal residual heat removal is in progress.

2. Reactor Coolant System boron concentration is at the cold shutdown concentration.

3. Reactor makeup control system is set to provide makeup at the cold shutdown concentration.

4. Reactor Coolant System is either water solid or drained to minimum level for the purpose of refueling or maintenance. If the Reactor Coolant System is water solid, system pressure is controlled by letdown through the Residual Heat Removal System and through the low pressure letdown valve in the letdown line.

5. The charging and letdown lines of the Chemical and Volume Control System are filled with coolant at the cold shutdown boron concentration. The letdown orifice isolation valves are closed.

If the Reactor Coolant System requires filling and venting, the procedure is as follows:

1. One charging pump is started, which provides blended flow from the reactor makeup control system at the cold shutdown boron concentration.

2. The vents on the head of the reactor vessel and pressurizer are opened.

3. The Reactor Coolant System is filled and the vents closed.

The system pressure is raised by using the charging pump and controlled by the low pressure letdown valve. When the system pressure is adequate for operation of the reactor coolant pumps, including seal water flow, the pumps are briefly operated and the RCS vented sequentially until all gases are cleared from the system. Final venting takes place at the pressurizer.

An alternate means of venting the RCS without the use of the RCPs is via the Reactor Coolant Vacuum Refill System (RCVRS). The RCVRS is connected to the pressurizer relief tank and is designed to remove air and noncondensable gases from the RCS by applying a vacuum to the RCS in Mode 5. The gases will be drawn from the steam generator tubes to the reactor vessel head and pressurizer. The RCSHV valves and pressurizer power operator relief valves (PORV) are opened to allow the gases to flow through the pressurizer relief tank to the RCVRS suction header. After the gases are removed, the vacuum is maintained until the RCS is filled.

After the filling and venting operations are completed, charging and letdown flows are established. Pressurizer heaters are energized and steam formation in the pressurizer is accomplished by control of the charging flow and letdown flow. When the pressurizer water level reaches the no-load programmed set point, the pressurizer level control can be shifted to control the charging flow to maintain programmed level. The reactor coolant pumps are started, the plant enters hot shutdown, and the Residual Heat Removal System is isolated from the RCS.

The reactor coolant boron concentration can now be reduced by operating the reactor makeup control system in the "dilute" mode. During heatup, the appropriate combination of letdown orifices is used to provide necessary letdown flow. Prior to or during the heating process, the CVCS is employed to obtain the correct chemical properties in the RCS. The reactor makeup control system is operated to ensure correct control rod position. Chemicals are added through the chemical mixing tank as required to control reactor coolant chemistry such as pH and dissolved oxygen content. Hydrogen overpressure is established in the volume control tank to assure the appropriate hydrogen concentration in the reactor coolant.

The reactor coolant boron concentration is corrected to the point where the control rods may be withdrawn and criticality achieved or the control rods withdrawn and the RCS diluted to achieve criticality. Nuclear heatup may then proceed with corresponding manual adjustment of the reactor coolant boron concentration to balance the temperature coefficient effects and maintain the control rods within their operating range.

<u>Power Generation and Hot Standby Operation</u>

Base Load

At a constant power level, the rates of charging and letdown are dictated by the requirements for seal water to the reactor coolant pumps and the normal purification of the RCS. One charging pump is employed and charging flow can be controlled automatically from pressurizer level. Adjustments in boron concentration are made to compensate for core burnup and to maintain the control groups within their allowable limits. Rapid variations in power demand can

be accommodated automatically by control rod movement. If variations in power level occur, and the new power level is sustained for long periods, some adjustment in boron concentration may be necessary to maintain the control groups within their maneuvering band.

During normal operation, normal letdown flow is maintained and one mixed bed demineralizer is in service. Reactor coolant samples are taken periodically to check boron concentration, lithium concentration, zinc concentration, water quality, and activity level.

Load Changes

A power reduction will initially cause a xenon buildup followed by xenon decay to a new, lower equilibrium value. The reverse occurs if the power level increases; initially, the xenon level decreases and then it increases to a new and higher equilibrium value associated with the amount of the power level change.

The reactor makeup control system can be used to vary the reactor coolant boron concentration to compensate for xenon transients occurring when reactor power level is changed.

The operators maintain Δ I on program by manual/auto rod motion and sufficient boration / dilution to maintain TAVE on program.

During power ascension, the reactor coolant expands as its temperature rises. The pressurizer absorbs most of this expansion as the level controller raises the level setpoint to the increased level associated with the new power level. The remainder of the excess coolant is letdown and stored in the volume control tank and/or HUT. During this period, the flow through the letdown orifice remains constant and the charging flow is reduced by the pressurizer level control signal, resulting in an increased temperature at the regenerative heat exchanger outlet. The temperature controller downstream from the letdown heat exchanger increases the component cooling water flow to maintain the desired letdown temperature.

During power reduction, the charging flow is increased to make up for the coolant contraction not accommodated by the programmed reduction in pressurizer level.

Hot Standby

If required, for periods of maintenance, or following reactor trips, the reactor can be held subcritical, but with the capability to return to power. During this hot standby period, temperature is maintained at no-load T_{avg} by initially dumping steam to remove core residual heat, or at later stages, by running reactor coolant pumps to maintain system temperature.

Following shutdown, xenon buildup occurs and increases the degree of shutdown (Δk/k). The effect of xenon buildup is to increase the degree of shutdown (Δk/k) to a maximum at about eight hours following shutdown from equilibrium full power conditions. If hot shutdown is maintained past this point, xenon decay results in a decrease in degree of shutdown. Since the Δk/k value of the initial xenon concentration is high (assuming that an equilibrium concentration had been reached during operation), boration of the reactor coolant is necessary to counteract the xenon decay and maintain shutdown.

If rapid recovery is required, dilution of the system may be performed to counteract this xenon buildup. However, after the xenon concentration reaches a peak, boration may be required to maintain the reactor subcritical as the xenon decays out.

Hot Shutdown and Cold Shutdown

Before initiating a cold shutdown, the Reactor Coolant System hydrogen concentration is reduced by reduction of the volume control tank overpressure and venting the gases to the waste gas vent header.

During the plant cooldown, charging is provided to makeup for coolant contraction. During the initial phase of the cooldown, the makeup is usually provided from the boric acid tanks. Utilizing the boric acid tanks requires less boration volume than the RWST. The operators can continue using the boric acid tanks if additional volume is available, or shift suction of the charging pumps to the refueling water storage tank. If the boric acid tanks are used, boric acid can be charged until the reactor coolant system reaches the desired cold shutdown concentration. The cooldown can be completed by using blended makeup at the cold shutdown concentration.

Contraction of the coolant during cooldown results in increased charging flow to maintain normal pressurizer water level. This results in a decreasing volume control tank level and makeup to maintain the inventory.

After the Residual Heat Removal System is placed in service and the reactor coolant pumps are shut down, further cooling of the pressurizer liquid is accomplished by the auxiliary spray line. Coincident with plant cooldown, a portion of the reactor coolant flow may be diverted from the Residual Heat Removal System to the CVCS for cleanup. Demineralization of ionic radioactive impurities and stripping of fission gases reduce the reactor coolant activity level sufficiently to permit personnel access for refueling or maintenance operations.

9.3.4.3 Safety Evaluation

9.3.4.3.1 Reactivity Control

Any time that the plant is at power, the quantity of boric acid retained and ready for injection always exceeds that quantity required for the normal cold shutdown assuming that the control assembly of greatest worth is in its fully withdrawn position. This quantity always exceeds the quantity of boric acid required to bring the reactor to hot shutdown and to compensate for subsequent xenon decay. An adequate quantity of boric acid is also available in the refueling water storage tank to achieve cold shutdown.

When the reactor is subcritical; i.e., during cold shutdown, hot shutdown, or hot standby, fuel movement during refueling (as described in Section 4.2) and during approach to criticality, the neutron source multiplication is continuously monitored and indicated. Any appreciable increase in the neutron source multiplication, including that caused by the maximum physical boron dilution rate, is slow enough to give ample time to start a corrective action to stop boron dilution and begin boration to prevent the core from becoming critical. The rate of boration via the normal charging line, with a single boric acid transfer pump operating, is sufficient to take the reactor from full power operation to 1 percent shutdown in the hot condition, with no rods inserted, in approximately 90 minutes. In an additional 100 minutes, enough boric acid can be

injected to compensate for xenon decay, although xenon decay below the full power equilibrium operating level will not begin until approximately 25 hours after shutdown. Additional boric acid is employed if it is desired to bring the reactor to cold shutdown conditions.

Two separate and independent flow paths are available for reactor coolant boration; i.e., the charging line and the reactor coolant pump seal injection. A single failure does not result in the inability to borate the RCS.

If the normal charging line is not available, charging to the RCS is continued via reactor coolant pump seal injection at the rate of 20 gpm (5gpm per reactor coolant pump), approximately 370 minutes are required to add enough boric acid solution to counteract xenon decay, although xenon decay below the full power equilibrium operating level will not begin until approximately 25 hours after the reactor is shut down.

As backup to the normal boric acid supply, the operator can align the refueling water storage tank outlet to the suction of the charging pumps.

The Technical Requirement Manual requires that at least one flow path is available for boron injection when in Modes 4, 5, and 6. The Technical Requirement Manual requires redundant boration capability when in Modes 1, 2, and 3. The capability of such injection is adequate to ensure shutdown margin can be maintained after xenon decay and cooldown. An upper limit to the boric acid tank boron concentration, and a lower limit for ambient temperature ensure that solution solubility is maintained.

The Technical Requirements Manual permits one charging pump and associated flow path to be nonfunctional during power operation for a specified time period, provided that the opposite charging pump and associated flow path is functional. Out of service action times and specific actions are described in the Technical Requirements Manual.

9.3.4.3.2 Reactor Coolant Purification

The Chemical and Volume Control System (CVCS) is capable of reducing the concentration of ionic isotopes in the purification stream as required in the design basis. This is accomplished by passing the letdown flow through the mixed bed demineralizers which remove ionic isotopes, except those of cesium, molybdenum and yttrium, with a minimum decontamination factor of 10. Through occasional use of the cation bed demineralizer, the concentration of cesium can be maintained below 1.0 ☒Ci/cc, assuming one percent of the rated core thermal power is being produced by fuel with defective cladding. The cation bed demineralizer is capable of passing the normal letdown flow, through only a portion of this capacity is normally utilized. Each mixed bed demineralizer is capable of processing the maximum letdown flow rate. If the normally operating mixed bed demineralizer's resin has become exhausted, the second demineralizer can be placed in service. Each demineralizer is designed, however, to operate for one core cycle with one percent defective fuel.

9.3.4.3.3 Seal Water Injection

Flow to the reactor coolant pump seals is assured by redundant charging pumps capable of supplying the normal charging line flow plus the nominal seal water flow.

9.3.4.3.4 Leakage Provisions

Chemical and Volume Control System components, valves and piping which see radioactive service are designed to limit leakage to the atmosphere. Leakage to the atmosphere is limited through:

1. Welding of all piping joints and connections except where flanged connections are provided to facilitate maintenance and hydrostatic testing,

2. Extensive use of leakoffs to collect leakage, and

3. Use of diaphragm valves where conditions permit.

The volume control tank in the CVCS provides an inferential measurement of leakage from the CVCS as well as the Reactor Coolant System. Low level in the volume control tank actuates makeup automatically or alarms for manual makeup alignment. The amount of leakage can be inferred from the amount of makeup added by the reactor makeup control system. In the event of pipe breaks outside the containment, the CVCS can be isolated from the RCS.

9.3.4.3.5 Ability to Meet the Safeguards Function

A failure analysis of the portion of the CVCS which is used as part of the Emergency Core Cooling System is included as part of the ECCS Failure analysis presented in Section 6.3.

9.3.4.4 Tests and Inspections

As part of plant operation, periodic tests, surveillance inspections and instrument calibrations are made to monitor equipment condition and performance. Most components are in use regularly; therefore, assurance of the availability and performance of the systems and equipment is provided by control room and/or local indication.

Technical Specifications have been established for appropriate CVCS components.

9.3.4.5 Instrumentation Application

Process control instrumentation is provided to acquire data concerning key parameters about the Chemical and Volume Control System. Instrumentation furnishes input signals for monitoring and/or alarming purposes.

The instrumentation supplies input signals for control purposes. Some specific control functions are:

1. Letdown flow is diverted to the volume control tank upon high temperature indication upstream of the mixed bed demineralizers.

2. Pressure downstream of the letdown orifices is controlled to prevent flashing of the letdown liquid.

3. Charging flow rate is controlled during charging pump operation.

4. Water level is controlled in the volume control tank.

5. Temperature of the boric acid solution in the batching tank is maintained.

6. Reactor makeup is controlled.

A simplified flow and instrument drawing is provided in Figures 9.3.4-1, 9.3.4-2, 9.3.4-3, and 9.3.4-4. Pump logic is provided in Figures 9.3.4-5 and 9.3.4-6.

9.3.5 Auxiliary Charging System

9.3.5.1 Design Bases

The Auxiliary Charging System (ACS) is designed to provide makeup to the Reactor Coolant System (RCS) when the plant is operating in the "flood mode." For definition of "flood mode" see Appendix 2.4A. This system is an essential part of the equipment used in flood protection provisions. This system is also designated as the Flood-Mode Boration Makeup System.

The ACS includes the following equipment:

1. Four full-capacity auxiliary charging pumps (two per unit)

2. Auxiliary makeup tank

3. Filter

4. Demineralizer

5. Two auxiliary charging booster pumps

Each auxiliary charging pump (ACP) and each auxiliary charging booster pump have capacities several times greater than the maximum leakage loss from the primary system. Leakage loss is based on No. 2 and No. 3 seal leakage with No. 1 seal injection and return lines isolated and an RCS pressure of 500 lb/in^2g (maximum during "flood mode"), plus the remainder of recoverable and nonrecoverable leakage, based on the average annual rates for normal power operation (at full RCS pressure).

The auxiliary makeup tank (AMT) has a capacity sufficient to provide a minimum of 24 hours makeup based on the above leakage loss. Makeup is prepared in a batch process.

A filter and demineralizer are provided for cleanup of makeup water.

9.3.5.2 System Design Description

The ACS is shown on Figure 9.3.6-1. The initial supply of auxiliary makeup water is from the demineralized water tanks. The majority of leakage, from RCS pump seals, etc., is collected in the reactor coolant drain tank (RCDT) and can be pumped by the RCDT pumps to the AMT. This recoverable leakage is the main preferred source of makeup water. Additional makeup water is supplied from other preferred sources: (1) accumulator tanks via the RCDT pumps, (2) pressurizer relief tank via the RCDT pumps, and (3) demineralized water tanks.

The above preferred sources of makeup water are backed up by the fire protection system which can supply river water to the AMT. To prevent inadvertent injection of raw water into the primary system, this source is connected, via fire hose, only if it is needed.

Auxiliary makeup water is borated to the extent necessary to maintain refueling shutdown concentration in the RCS. Hydrazine and lithium hydroxide are added to makeup water as required.

The primary system can be sampled periodically and analyzed for boron concentration. Sample outlets are provided that are accessible in the flood mode. The makeup water is pumped from the auxiliary makeup tank to the primary system as demanded by pressurizer level.

9.3.5.3 Design Evaluation

The ACS includes both essential and preferred components. Essential components are designed to standards required of engineered safety features. Preferred components are not designed as engineered safety features, but are high quality commercial components.

The ACP and AMT are essential components.

Sufficient separation and redundancy of components and circuits are provided so that no single failure can jeopardize the operation. All components are capable of being supplied with emergency power.

Seismic qualification of the ACS is not required since the coincidence occurrence of a flood exceeding plant grade and an earthquake is a low probability event (see Appendix 2.4A).

9.3.5.4 Tests and Inspection

All components of the ACS are accessible for inspection. Insofar as practicable, the design provides capability to demonstrate the state of readiness.

9.3.5.5 Instrument Application

Manual control is employed to the maximum extent practicable. ACS motors and I&C are classified as essential.

Completely manual operation will be used to transfer water to the AMT. Levels in the AMT can be visually checked since the tank has a 1 day supply under worst case conditions. The redundant pressurizer level loops in the RCS serve as indications of the low pressurizer level necessary for the activation of the ACP.

TABLE 9.3.1-1

AUXILIARY CONTROL AIR COMPONENT DESIGN DATA

Auxiliary Air Compressors	
Number	2
Type	Reciprocating
Discharge pressure, psig	90
Discharge temperature, °F (Norm/Max)	244/400 (to aftercooler)
Capacity, actual cfm	78 each
Auxiliary Air Compressor Aftercooler	
Number	1 per compressor
Type	Tube and shell
Tube side flow, gpm (water)	3.5
Shell side flow, actual cfm (air)	78
Discharge temperature, °F (Design)	120
Auxiliary Air Receivers	
Number	2
Capacity, ft^3	34
Design Pressure, psig	125
Design temperature, °F	120°
Operating pressure, psig	105
Material	Carbon Steel
Design code	ASME VIII

TABLE 9.3.2-1 (Sheet 1)

PROCESS SAMPLING SYSTEM

SAMPLE LOCATIONS AND DATA

Sampled System	Sample Location	Sample Type (See Note 1)
CVCS	Mix Bed Demineralizer Inlet	Hot Sample Room
CVCS	Mix Bed Demineralizer Outlet	Hot Sample Room
CVCS	Volume Control Tank Vent	Hot Sample Room
CVCS	*CVCS Holdup Tank Recirculation	Hot Sample Room
CVCS	Volume Control Tank	Grab Sample
CVCS	Holdup Tank	Grab Sample
CVCS	Downstream Letdown Heat Exchanger	Local
CVCS	Inlet Boric Acid Tanks	Local
CVCS	*Inlet Boric Acid Tanks	Local
CVCS	Outlet Boric Acid Blender	Hot Sample Room
CVCS	*Outlet Batching Tank	Local
CVCS	*Downstream Monitor Tank Pumps A and B	Local
WDS	*Chemical Drain Tank Recirculate	Local
WDS	*Cask Decontamination Tank	Local
WDS	*Floor Drain Collector Tank Recirculation	Hot Sample Room
WDS	*Tritiated Drain Tank Recirculation	Hot Sample Room

TABLE 9.3.2-1 (Sheet 2)
(Continued)

PROCESS SAMPLING SYSTEM

SAMPLE LOCATIONS AND DATA

Sampled System	Sample Location	Sample Type (See Note 1)
WDS	*Spent Resin Storage Tank	Grab Sample
WDS	*Gas Decay Tank Gas Sampling Header	Gas Analyzer
WDS	*Gas Decay Tank Plant Vent Header	Gas Analyzer
WDS	Reactor Coolant Drain Tank	Grab Samples as Necessary
RCS	Hot Leg Loop 1	Hot Sample Room
RCS	Hot Leg Loop 3	Hot Sample Room
RCS	Pressurizer Liquid	Hot Sample Room
RCS	Pressurizer Gas	Hot Sample Room
RCS	Pressure Relief Tank	Grab Sample
Main Stm	Stm Gen No. 1 to H.P. Turbine	Local
Main Stm	Stm Gen No. 2 to H.P. Turbine	Local

TABLE 9.3.2-1 (Sheet 3)
(Continued)

PROCESS SAMPLING SYSTEM

SAMPLE LOCATIONS AND DATA

Sampled System	Sample Location	Sample Type (See Note 1)
Main Stm	Stm Gen No. 3 to H.P. Turbine	Local
Main Stm	Stm Gen No. 4 to H.P. Turbine	Local
S.F.P.C.	*Upstream Spent Fuel Pit	Local
S.F.P.C.	*Downstream Spent Fuel Pit Demineralizer	Local
S.F.P.C.	*Refueling Wtr Purification Filter (Upstream)	Local
S.F.P.C	*Refueling Wtr Purification Filter (Downstream)	Local
FW	Auxiliary FW Pump Hdr 1A-A	Local
FW	Auxiliary FW Pump Hdr 1B-B	Local
FW	Turbine Driven Auxiliary FW Pump 1A	Local
SGBD	Stm Gen Blowdown No. 1, 2, 3, 4, and common	Local and Hot Sample Room
ERCW	Downstream CCS Heat Exchangers 1A1, 1A2	Local
ERCW	Downstream CCS Heat Exchangers 2A1, 2A2	Local

TABLE 9.3.2-1 (Sheet 4)
(Continued)

PROCESS SAMPLING SYSTEM

SAMPLE LOCATIONS AND DATA

Sampled System	Sample Location	Sample Type (See Note 1)
ERCW	*Downstream CCS Heat Exchangers OB1, OB2	Local
PMW	Primary Water Storage Tank	Local
RHR	RHR Pump 1A Minimum Flow Line	Hot Sample Room
RHR	RHR Pump 1B Minimum Flow Line	Hot Sample Room
RHR	Upstream RHR Exchanger 1A	Hot Sample Room
RHR	Upstream RHR Exchanger 1B	Hot Sample Room
SIS	Accumulator Tank Header Outlet	Hot Sample Room
SIS	Accumulator Tank No. 1, 2, 3, and 4	Hot Sample Room
SIS	SI Pump Refueling Water	Hot Sample Room
SIS	Refueling Water Storage Tank	Local

*These samples are common plant samples. All other samples are for Unit 1; Unit 2 is the same.

Note:
1. The sample type indicates sample collection area or sample equipment.

TABLE 9.3.4-1

CHEMICAL AND VOLUME CONTROL SYSTEM DESIGN PARAMETERS

General	
Seal water supply flow rate, for four reactor coolant pumps, nominal, gpm	32
Seal water return flow rate, for four reactor coolant pumps, nominal, gpm	12
Letdown flow:	
Normal, gpm	75
Maximum, gpm	120*
Charging flow (excludes seal water):	
Normal, gpm	55
Maximum, gpm	100*
Normal Temperature of letdown reactor coolant entering system, °F	545
Normal Temperature of charging flow directed to Reactor Coolant System, °F	495
Centrifugal charging pump bypass flow (each), gpm	60

* During RHR shutdown cleanup, letdown flow is qualified for 180 gal/min and charging flow is qualified to 200 gal/min (including seal water). Reference Westinghouse Report LTR-SEE-04-210.

TABLE 9.3.4-2 (Sheet 1)

PRINCIPAL COMPONENT DATA SUMMARY

Centrifugal Charging Pumps	
Number	2 (per unit)
Design pressure, psig	2800
Design temperature, °F	300
Design flow (with miniflow), gpm	150
Design head, ft.	5800
Material	Austenitic stainless steel
Boric Acid Transfer Pumps	
Number	2 (per unit)
Design pressure, psig	150
Design temperature, °F	250
Design flow, gpm	75
Design head, ft.	235
Material	Austenitic stainless steel
Holdup Tank Recirculation Pump	
Number	1 (shared)
Design pressure, psig	150
Design temperature, °F	200
Design flow, gpm	500
Design head, ft.	100
Material	Austenitic stainless steel
Monitor Tank Pumps	
Number	2 (shared)
Design pressure, psig	150
Design temperature, °F	200
Design flow, gpm	150
Design head, ft.	200
Material	Austenitic stainless steel
Regenerative Heat Exchanger	
Number	1 (Per unit)
Heat transfer rate at normal conditions, Btu/hr	10.3×10^6
Shell Side	
Design pressure, psig	2485
Design temperature, °F	650
Fluid	Borated reactor coolant
Material	Austenitic stainless steel

TABLE 9.3.4-2 (Sheet 2)

PRINCIPAL COMPONENT DATA SUMMARY

Tube Side		
Design pressure, psig	2735	
Design temperature, °F	650	
Fluid	Borated reactor coolant	
Material	Austenitic stainless steel	
Shell Side (Letdown)	Normal	Heatup
Flow, lb/hr	37,050	59,280
Inlet temperature, °F	545	547
Outlet temperature, °F	290	366
Tube Side (Charging)		
Flow, lb/hr	27,170	29,640
Inlet temperature, °F	130	130
Outlet temperature, °F	495	521
Letdown Heat Exchanger		
Number	1 (per unit)	
Heat transfer rate at design conditions, Btu/hr	14.8×10^6	
Shell Side		
Design pressure, psig	150	
Design temperature, °F	250	
Fluid	Component cooling water	
Material	Carbon steel	
Tube Side		
Design pressure, psig	600	
Design temperature, °F	400	
Fluid	Borated reactor coolant	
Material	Austenitic stainless steel	
Shell Side	(Design	(Normal)
Flow, lb/hr	492,000	203,000
Inlet temperature, °F	95	95
Outlet temperature, °F	125	125
Tube Side		
Flow, lb/hr	59,280	37,050
Inlet temperature, °F	380	290
Outlet temperature, °F	127	127

TABLE 9.3.4-2 (Sheet 3)

PRINCIPAL COMPONENT DATA SUMMARY

Excess Letdown Heat Exchanger

Number		1 (per unit)
Heat transfer rate at design conditions, Btu/hr		4.61×10^6
	Shell Side	Tube Side
Design pressure, psig	150	2485
Design temperature, °F	250	650
Design flow, lb/hr	115,000	12,380
Normal inlet temperature, °F	95	545
Normal outlet temperature, °F	135	195
Fluid	Component cooling water	Borated reactor coolant
Material	Carbon steel	Austenitic stainless steel

Seal Water Heat Exchanger

Number		1 (per unit)
Heat transfer rate at design conditions, Btu/hr		2.49×10^6
	Shell Side	Tube Side
Design pressure, psig	150	200
Design temperature, °F	250	250
Design flow lb/hr	99,500	160,500
Design inlet temperature, °F	95	144
Design outlet temperature, °F	120	127
Fluid	Component cooling water	Borated reactor coolant
Material	Carbon steel	Austenitic stainless steel

Volume Control Tank

Number	1 (per unit)
Volume, $ft.^3$	400
Design pressure, psig	75
Design temperature, °F	250
Material	Austenitic stainless steel

Boric Acid Tanks

Number	1 (per unit) 1 (shared)
Capacity, each gal.	11,000
Design pressure	Atmospheric
Design temperature, °F	250
Material	Austenitic stainless steel

TABLE 9.3.4-2 (Sheet 4)

PRINCIPAL COMPONENT DATA SUMMARY

Boric Acid Batching Tank	
Number	1 (shared)
Capacity, gal.	800
Design pressure	Atmospheric
Design temperature, °F	300
Material	Austenitic stainless steel
Chemical Mixing Tank	
Number	1 (per unit)
Capacity, gal.	5
Design pressure, psig	150
Design temperature, °F	200
Material	Austenitic stainless steel
Holdup Tanks	
Number	2 (shared)
Capacity, gal., total for both	252,000
Design pressure, psig	15
Design temperature, °F	200
Material	Austenitic stainless steel
Monitor Tank	
Number	1 (shared)
Capacity, gal.	21,600
Design pressure	Atmospheric
Design temperature, °F	150
Material	Stainless steel
Mixed Bed Demineralizers	
Number	2 (per unit)
Design pressure, psig	200
Design temperature, °F	250
Design flow, gpm	120*
Resin volume, each, ft^3	30
Material	Austenitic stainless steel
Cation Bed Demineralizer	
Number	1 (per unit)
Design pressure, psig	200
Design temperature, °F	250
Design flow, gpm	75
Resin volume, ft^3	20
Material	Austenitic stainless steel

* Flow may be increased to 180 gpm for shutdown cleanup

TABLE 9.3.4-2 (Sheet 5)

PRINCIPAL COMPONENT DATA SUMMARY

Reactor Coolant Filter	
Number	1 (per unit)
Design pressure, psig	200
Design temperature, °F	250
Design flow, gpm	150 (max.)*
Particle retention	98 percent of 25 micron size (or better)
Material, (vessel)	Austenitic stain-less steel
Seal Water Injection Filters	
Number	2 (per unit)
Design pressure, psig	2735
Design temperature, °F	200
Design flow, gpm	80
Particle retention	98 percent of 5 micron size (or better)
Material, (vessel)	Austenitic stain-less steel
Seal Water Return Filter	
Number	1 (per unit)
Design pressure, psig	200
Design temperature, °F	250
Design flow, gpm	325
Particle retention	98 percent of 25 micron size (or better)
Material, (vessel)	Austenitic stain-less steel
Boric Acid Filter	
Number	1 (per unit)
Design pressure, psig	200
Design temperature, °F	250
Design flow, gpm	150
Particle retention	98 percent of 25 micron size (or better)
Material, (vessel)	Austenitic stain-less steel
Boric Acid Blender	
Number	1 (per unit)
Design pressure, psig	150
Design temperature, °F	250
Material	Austenitic stain-less steel

* Flow may be increased to 180 gpm for shutdown cleanup.

TABLE 9.3.4-2 (Sheet 6)

PRINCIPAL COMPONENT DATA SUMMARY

Letdown Orifice	45 gpm	75 gpm
Number	1 (per unit)	2 (per unit)
Design flow, lb/hr	22,230	37,050
Differential pressure at design flow, psia	1900	1900
Design pressure, psig	2485	2485
Design temperature, °F	650	650
Material	Austenitic stainless steel	Austenitic stainless steel
Resin Fill Tank		
Number		1 (shared)
Volume, ft^3		8
Design pressure		Atmospheric
Design temperature, °F		200
Material		Austenitic stainless steel
Seal Water Return Bypass Orifice		
Number		4 (per unit)
Design pressure, psig		2485
Design temperature, °F		650
Design flow, gpm		1.0
Design differential pressure, psi		300
Material		Austenitic stain-
Chemical Mixing Tank Orifice		
Number		1 (shared)
Design pressure, psig		150
Design temperature, °F		200
Design flow, gpm		2
Design differential pressure, psi		50
Material		Austenitic stainless steel
Boric Acid Tank Orifice		
Number		3 (shared)
Design pressure, psi		150
Design temperature, °F		200
Design flow, gpm		3
Design differential pressure, psi		100
Material		Austenitic stainless steel
Standpipe		
Number		4 (per unit)
Design pressure, psig		50
Design temperature, °F		212
Volume, ft^3		1.3
Material		Austenitic stainless steel

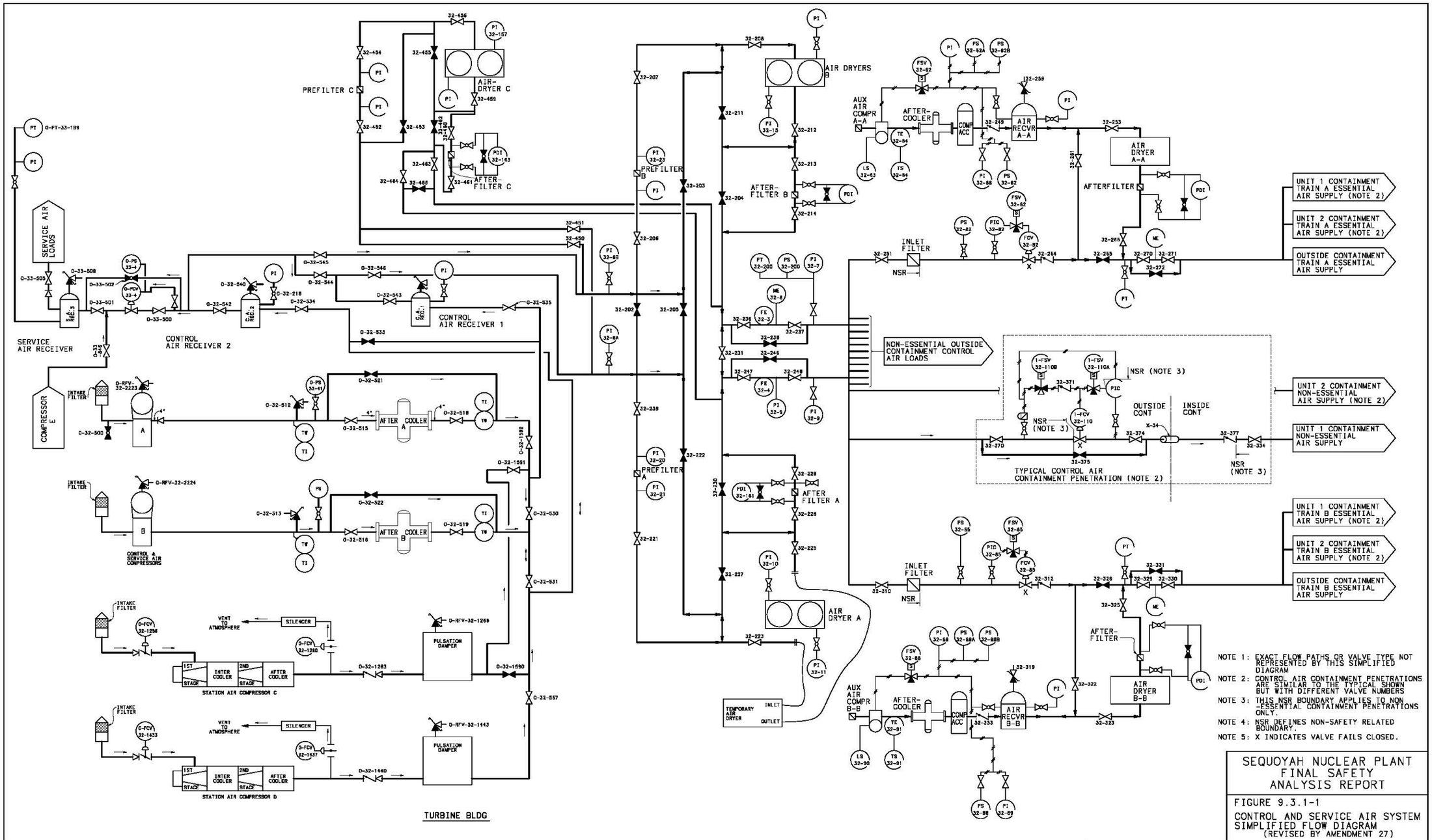
SERVICE AIR LOADS
SERVICE AIR RECEIVER
CONTROL AIR RECEIVER 2
CONTROL AIR RECEIVER 1
COMPRESSOR E
COMPRESSOR A
COMPRESSOR B
CONTROL & SERVICE AIR COMPRESSORS
PREFILTER C
AIR-DRYER C
AFTER-FILTER C
PREFILTER B
AFTER-FILTER B
PREFILTER A
AFTER-FILTER A
AIR DRYERS B
AIR DRYER A
AIR DRYER A-A
AIR DRYER B-B
AUX AIR COMPR A-A
AUX AIR COMPR B-B
AFTER-COOLER
COMP ACC
AIR RECVR A-A
AIR RECVR B-B
AFTERFILTER
INLET FILTER
NSR
NON-ESSENTIAL OUTSIDE CONTAINMENT CONTROL AIR LOADS
UNIT 1 CONTAINMENT TRAIN A ESSENTIAL AIR SUPPLY (NOTE 2)
UNIT 2 CONTAINMENT TRAIN A ESSENTIAL AIR SUPPLY (NOTE 2)
OUTSIDE CONTAINMENT TRAIN A ESSENTIAL AIR SUPPLY
UNIT 2 CONTAINMENT NON-ESSENTIAL AIR SUPPLY (NOTE 2)
UNIT 1 CONTAINMENT NON-ESSENTIAL AIR SUPPLY
UNIT 1 CONTAINMENT TRAIN B ESSENTIAL AIR SUPPLY (NOTE 2)
UNIT 2 CONTAINMENT TRAIN B ESSENTIAL AIR SUPPLY (NOTE 2)
OUTSIDE CONTAINMENT TRAIN B ESSENTIAL AIR SUPPLY
NSR (NOTE 3)
OUTSIDE CONT
INSIDE CONT
TYPICAL CONTROL AIR CONTAINMENT PENETRATION (NOTE 2)
AFTER COOLER A
AFTER COOLER B
PULSATION DAMPER
SILENCER
VENT TO ATMOSPHERE
INTAKE FILTER
STATION AIR COMPRESSOR C
STATION AIR COMPRESSOR D
TEMPORARY AIR DRYER
TURBINE BLDG
NOTE 1: EXACT FLOW PATHS OR VALVE TYPE NOT REPRESENTED BY THIS SIMPLIFIED DIAGRAM
NOTE 2: CONTROL AIR CONTAINMENT PENETRATIONS ARE SIMILAR TO THE TYPICAL SHOWN BUT WITH DIFFERENT VALVE NUMBERS
NOTE 3: THIS NSR BOUNDARY APPLIES TO NON-ESSENTIAL CONTAINMENT PENETRATIONS ONLY.
NOTE 4: NSR DEFINES NON-SAFETY RELATED BOUNDARY.
NOTE 5: X INDICATES VALVE FAILS CLOSED.
SEQUOYAH NUCLEAR PLANT
FINAL SAFETY ANALYSIS REPORT
FIGURE 9.3.1-1
CONTROL AND SERVICE AIR SYSTEM SIMPLIFIED FLOW DIAGRAM
(REVISED BY AMENDMENT 27)
CAD MAINTAINED DRAWING

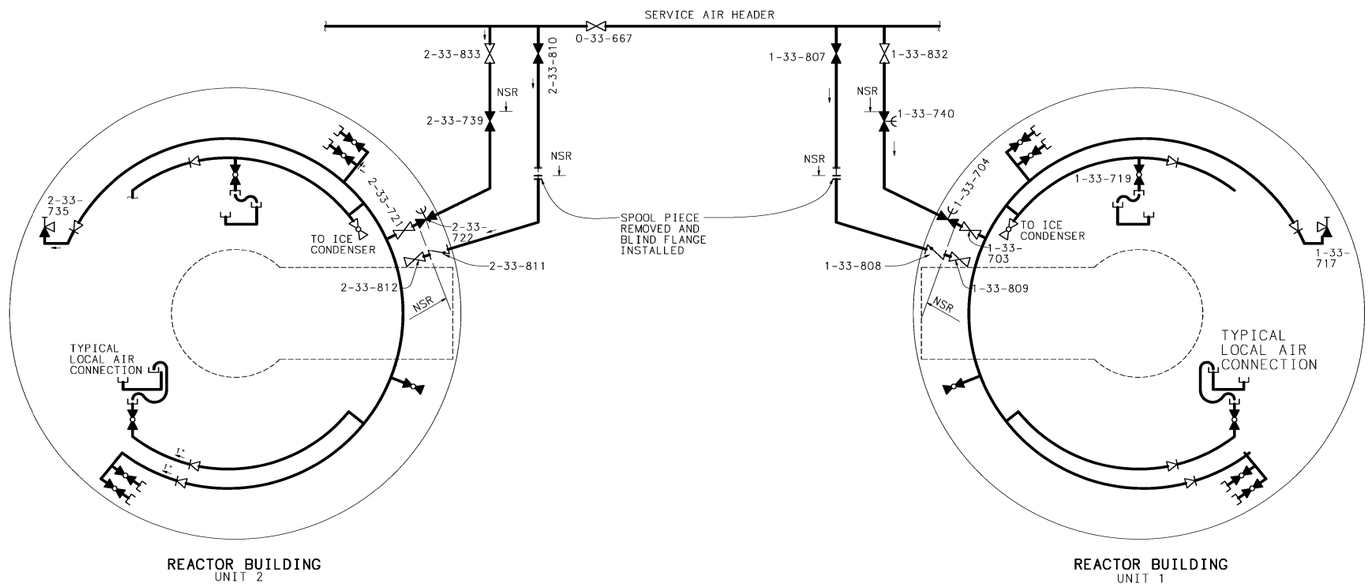

NSR DEFINES NON-SAFTEY RELATED
BOUNDARY.

SEQUOYAH NUCLEAR PLANT
FINAL SAFETY
ANALYSIS REPORT

FIGURE 9.3.1-2

FLOW DIAGRAM SERVICE AIR SYSTEM

(REVISED BY AMENDMENT 13)

DRAWING SERVICES UNIT
PROCAD MAINTAINED DRAWING
THIS CONFIGURATION CONTROL DRAWING IS MAINTAINED BY THE
SQN CAD UNIT AND IS NOW PART OF THE TVA PROCADAM DATABASE.
COMPUTER GRAPHICS

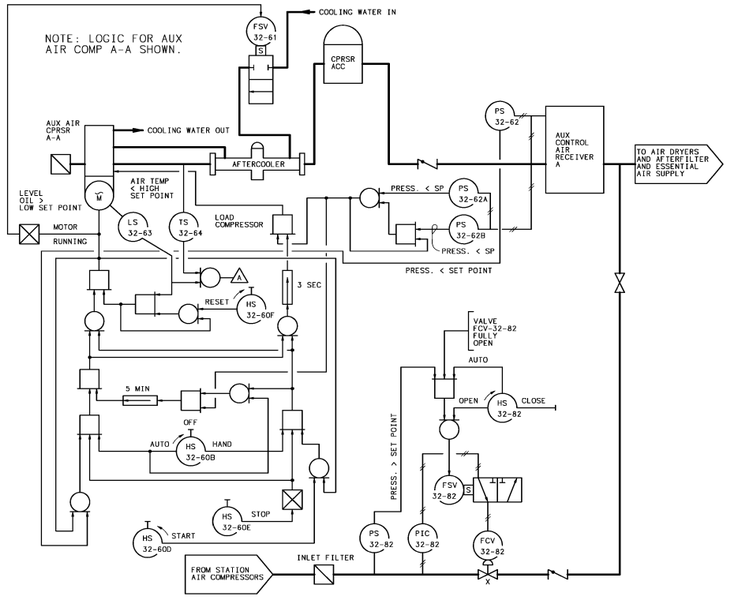

SEQUOYAH NUCLEAR PLANT
FINAL SAFETY
ANALYSIS REPORT

FIGURE 9.3.1-3
AUX AIR COMPRESSOR LOGIC

(REVISED BY AMENDMENT 17)

CAD MAINTAINED DRAWING

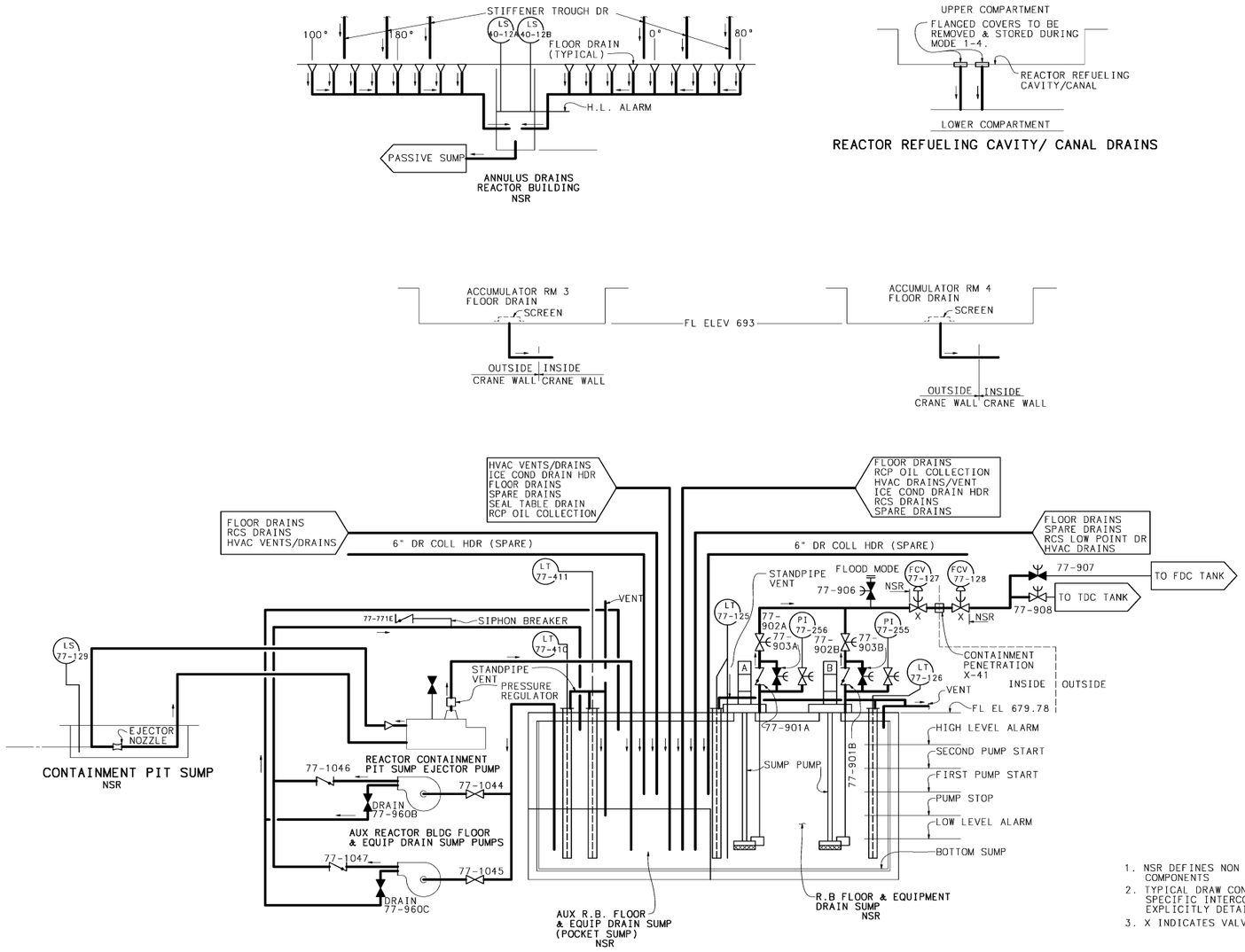

1. NSR DEFINES NON SAFETY RELATED COMPONENTS
2. TYPICAL DRAW CONFIGURATION SHOWN. SPECIFIC INTERCONNECTIONS NOT EXPLICITLY DETAILED.
3. X INDICATES VALVE FAILS CLOSED.

SEQUOYAH NUCLEAR PLANT
FINAL SAFETY
ANALYSIS REPORT

FIGURE 9.3.3-1

FLOW DIAGRAM-REACTOR BUILDING FLOOR & EQPT DRAINS
(REVISED BY AMENDMENT 13)

DRAWING SERVICES UNIT
PROCAD MAINTAINED DRAWING
THIS CONFIGURATION CONTROL DRAWING IS MAINTAINED BY THE SQN CAD UNIT AND IS NOW PART OF THE TVA PROCADAM DATABASE.
COMPUTER GRAPHICS

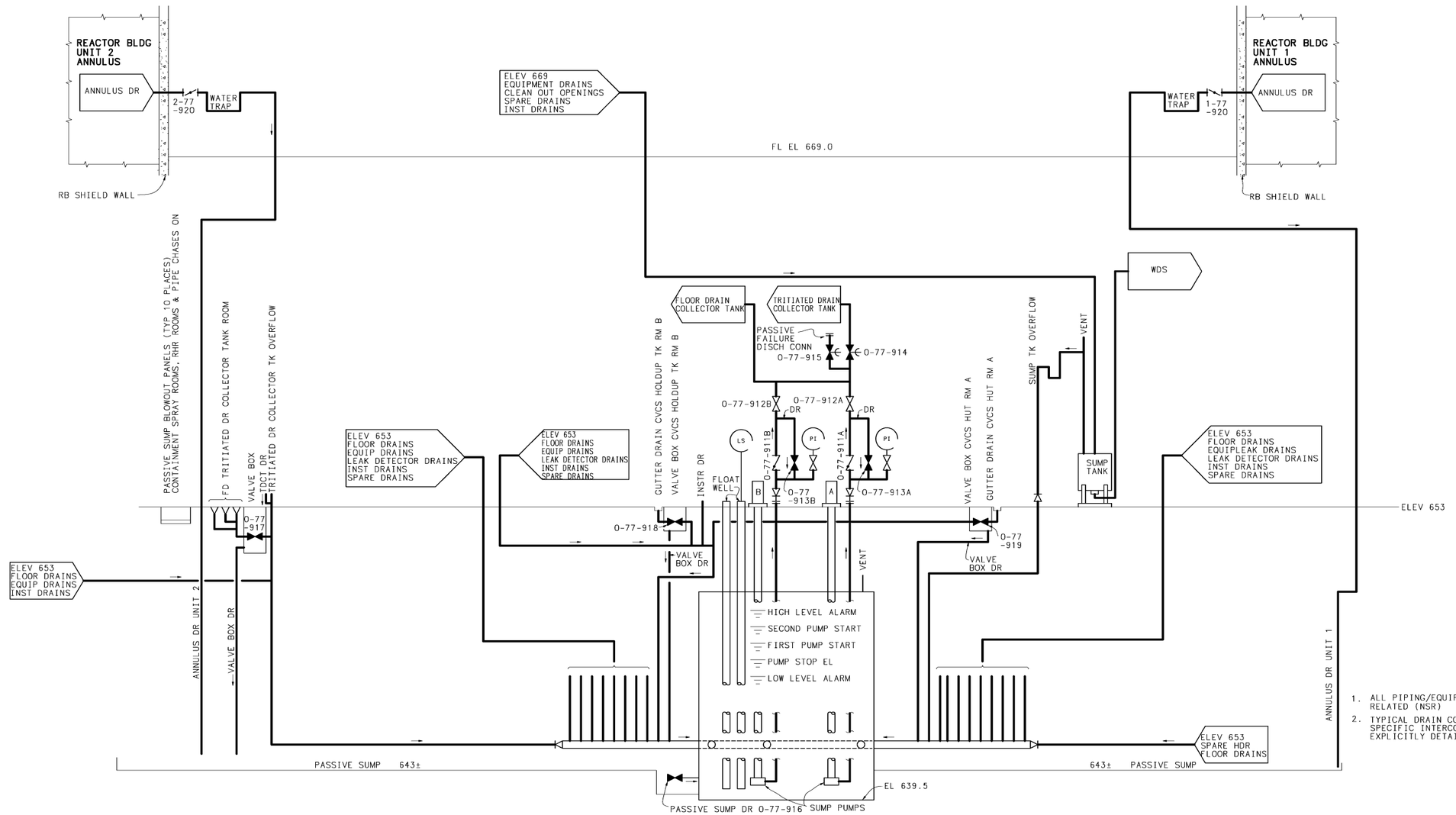

1. ALL PIPING/EQUIPMENT NON SAFETY RELATED (NSR)
2. TYPICAL DRAIN CONFIGURATION SHOWN. SPECIFIC INTERCONNECTION NOT EXPLICITLY DETAILED.

AUXILIARY BUILDING FLOOR & EQUIPMENT DRAIN SUMP
NSR

SEQUOYAH NUCLEAR PLANT
FINAL SAFETY
ANALYSIS REPORT

FIGURE 9.3.3-2

FLOW DIAGRAM
AUX BUILDING FLOOR & EQUIP DRAINS
(REVISED BY AMENDMENT 13)

DRAWING SERVICES UNIT
PROCAD MAINTAINED DRAWING
THIS CONFIGURATION CONTROL DRAWING IS MAINTAINED BY THE SQN CAD UNIT AND IS NOW PART OF THE TVA PROCADAM DATABASE.
COMPUTER GRAPHICS

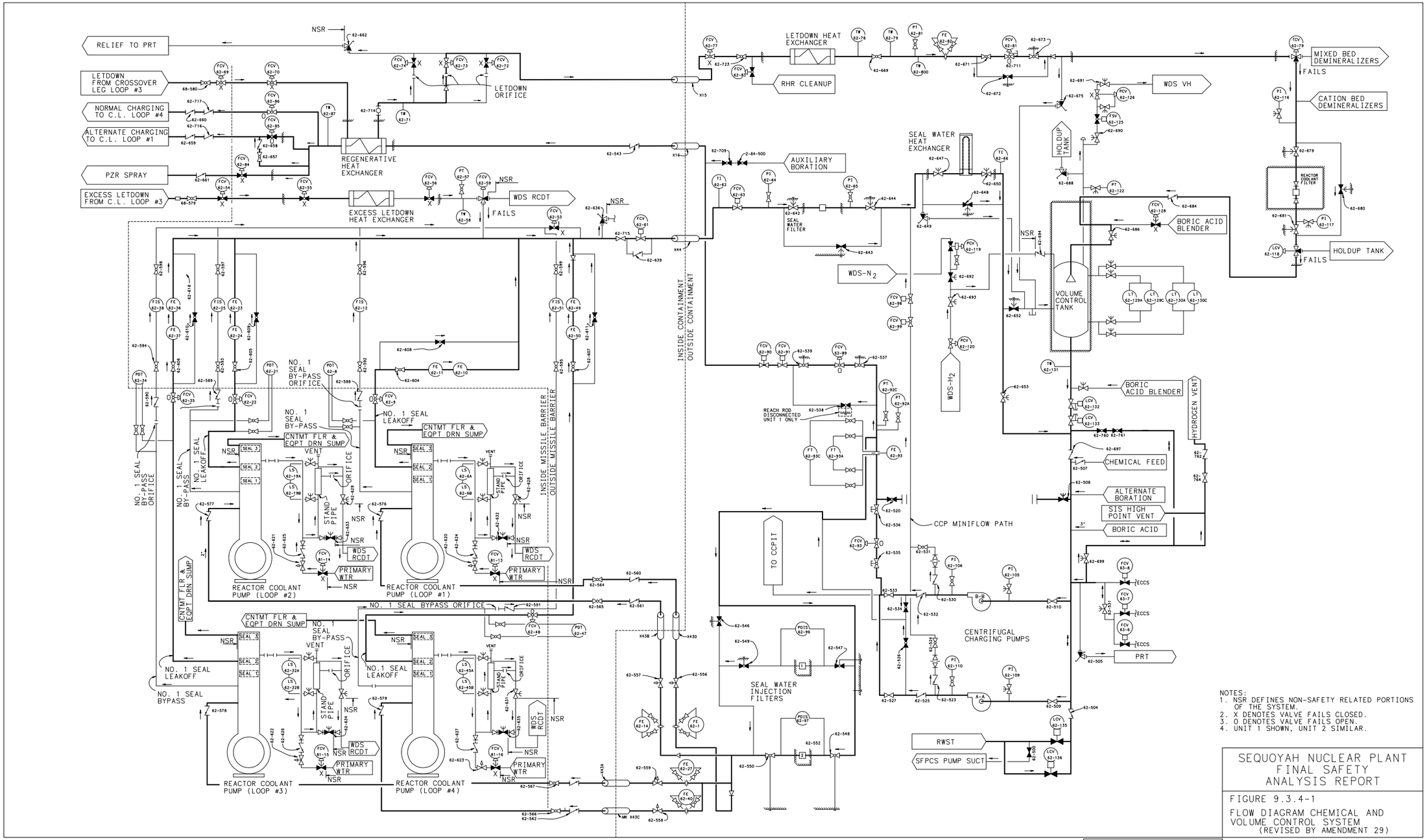

NOTES:
1. NSR DEFINES NON-SAFETY RELATED PORTIONS OF THE SYSTEM.
2. X DENOTES VALVE FAILS CLOSED.
3. O DENOTES VALVE FAILS OPEN.
4. UNIT 1 SHOWN, UNIT 2 SIMILAR.

SEQUOYAH NUCLEAR PLANT
FINAL SAFETY ANALYSIS REPORT

FIGURE 9.3.4-1

FLOW DIAGRAM CHEMICAL AND VOLUME CONTROL SYSTEM
(REVISED BY AMENDMENT 29)

CAD MAINTAINED DRAWING

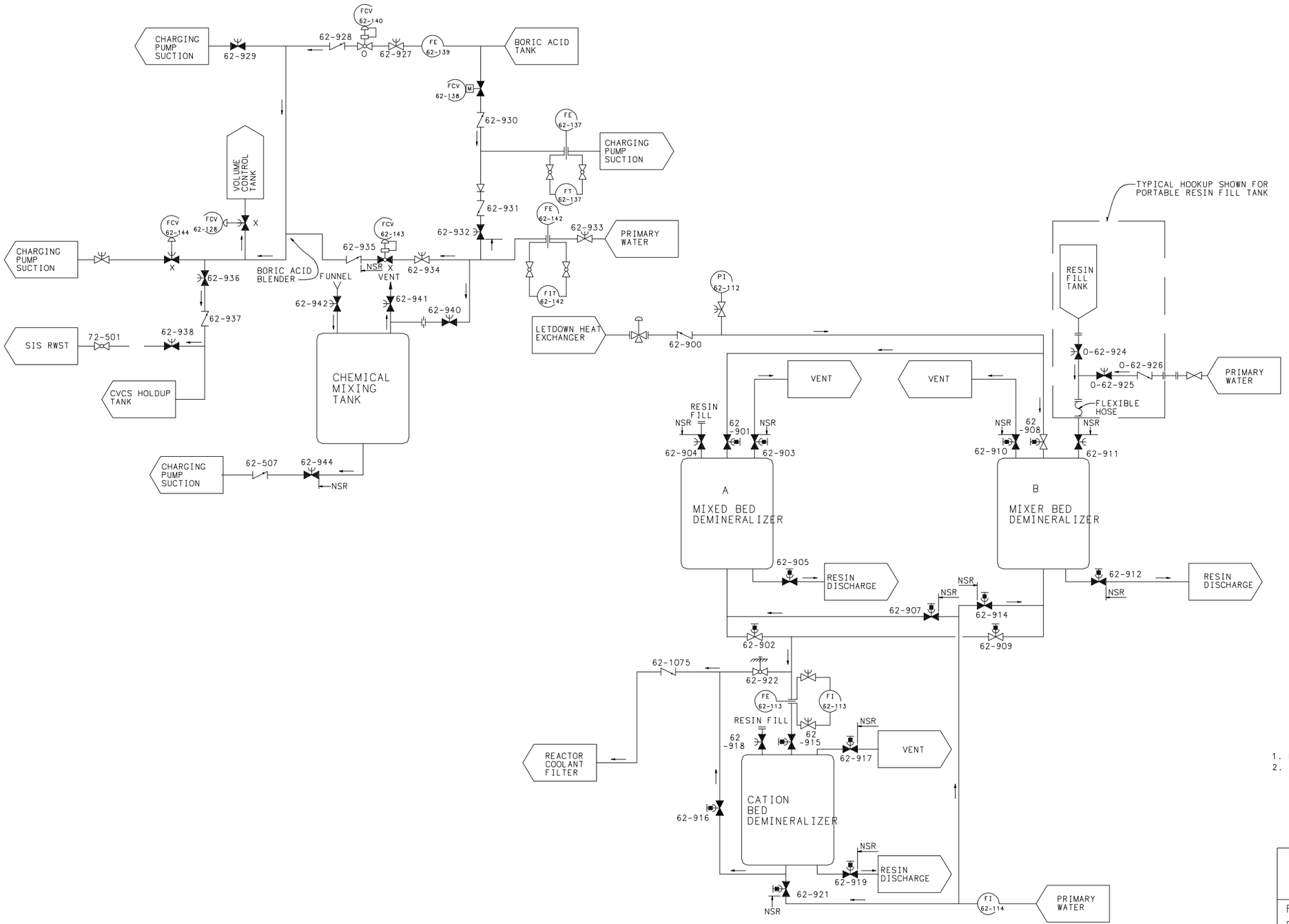

1. NSR DEFINES NON SAFTEY RELATED BOUNDARY
2. UNIT 1 SHOWN. UNIT 2 SIMILAR UNLESS OTHERWISE NOTED.

SEQUOYAH NUCLEAR PLANT
FINAL SAFETY
ANALYSIS REPORT

FIGURE 9.3.4-2

FLOW DIAGRAM CVCS CHEMICAL CONTROL
(REVISED BY AMENDMENT 30)

CAD MAINTAINED DRAWING

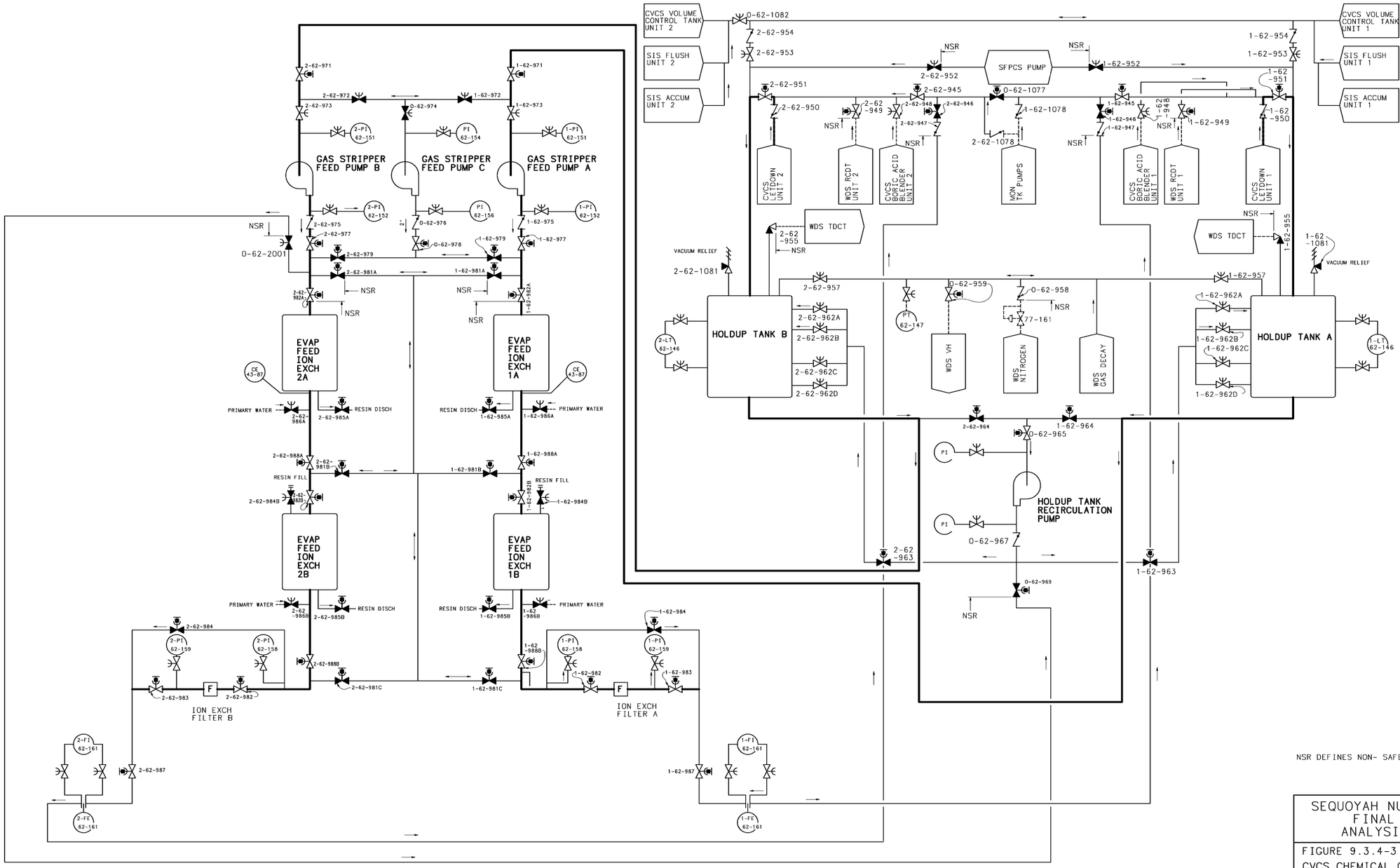

NSR DEFINES NON- SAFETY RELATED BOUNDARY

SEQUOYAH NUCLEAR PLANT
FINAL SAFETY
ANALYSIS REPORT

FIGURE 9.3.4-3

CVCS CHEMICAL CONTROL
FLOW DIAGRAM
(REVISED BY AMMENDMENT 17)

CAD MAINTAINED DRAWING

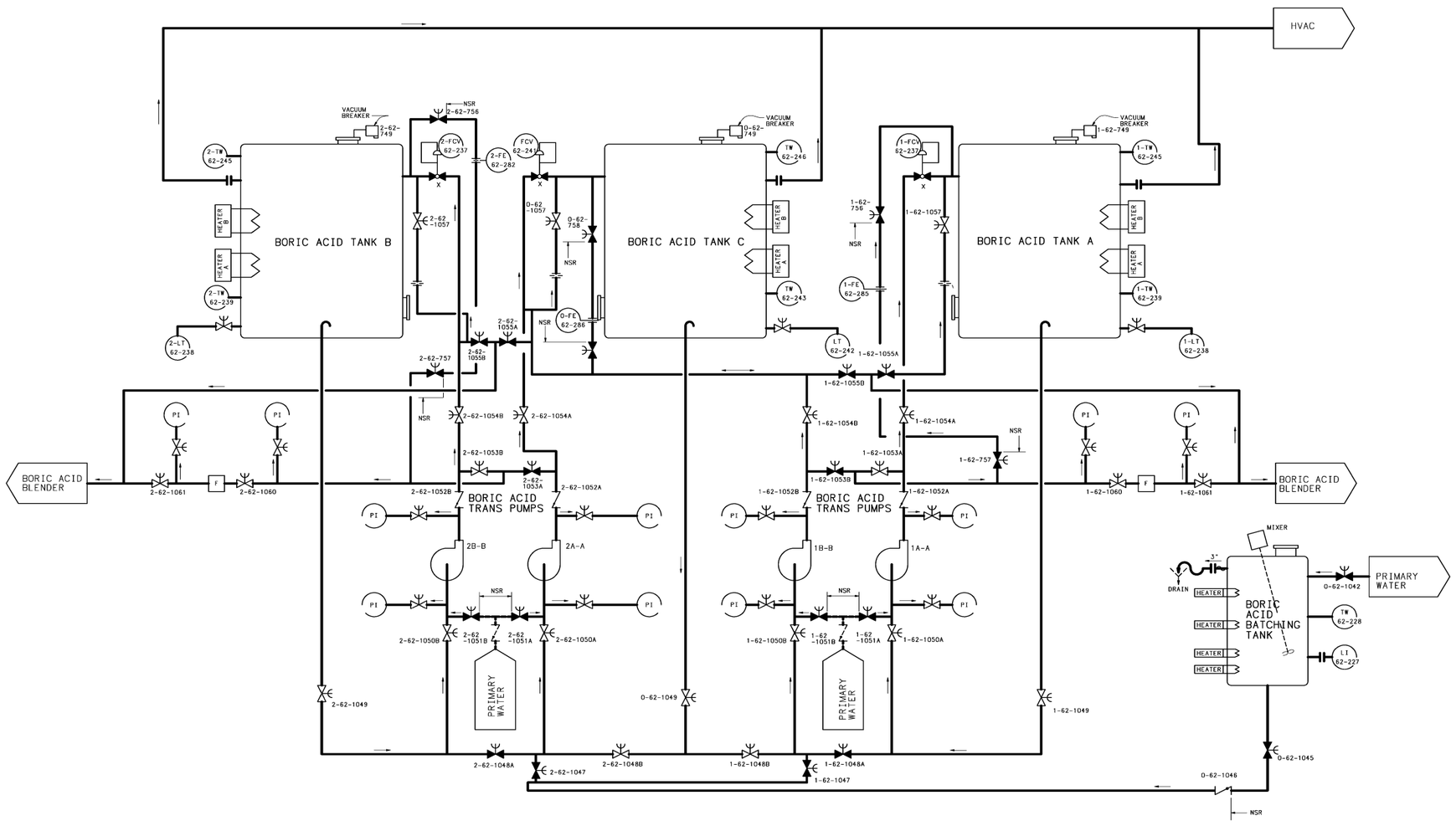

SEQUOYAH NUCLEAR PLANT
FINAL SAFETY
ANALYSIS REPORT

FIGURE 9.3.4-4

CVCS CHEMICAL CONTROL
FLOW DIAGRAM
(REVISED BY AMENDMENT 15)

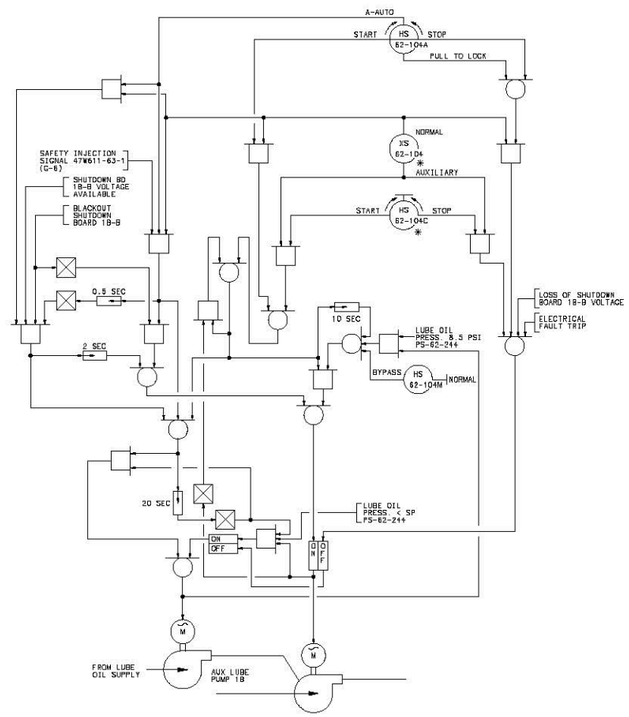

CENTRIFUGAL CHARGING PUMP 1B-B
LOGIC TYPICAL FOR CENTRIFUGAL
CHARGING PUMP 1A-A, 2A-A,2B-B

SEQUOYAH NUCLEAR PLANT
FINAL SAFETY
ANALYSIS REPORT

FIGURE 9.3.4-5
CHARGING PUMP LOGIC

(REVISED BY AMENDMENT 26)

CAD MAINTAINED DRAWING

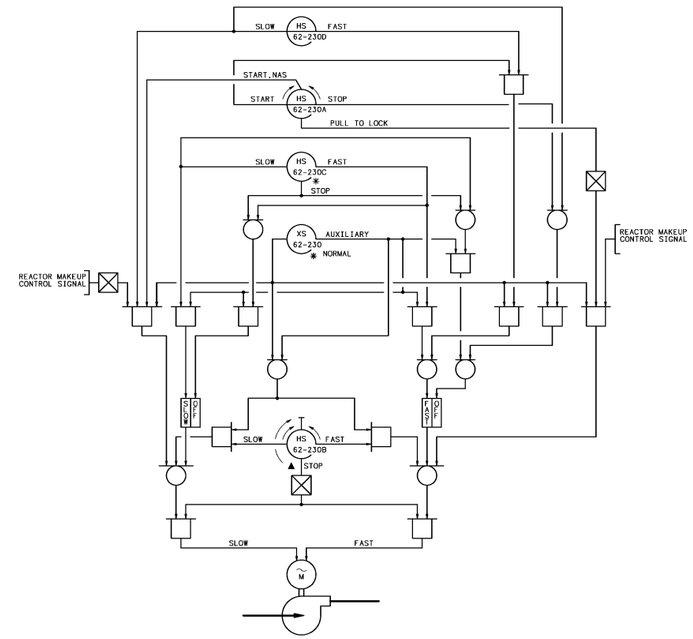

1. LOCATION OF CONTROLS
   ✳ AUXILIARY CONTROL STATION
   ▲ LOCAL

SEQUOYAH NUCLEAR PLANT
FINAL SAFETY
ANALYSIS REPORT

FIGURE 9.3.4-6

BORIC ACID PUMP LOGIC

(REVISED BY AMENDMENT 13)

DRAWING SERVICES UNIT
PROCAD MAINTAINED DRAWING
THIS CONFIGURATION CONTROL DRAWING IS MAINTAINED BY THE SQN CAD UNIT AND IS PART OF THE TVA PROCADAM DATABASE.
COMPUTER GRAPHICS

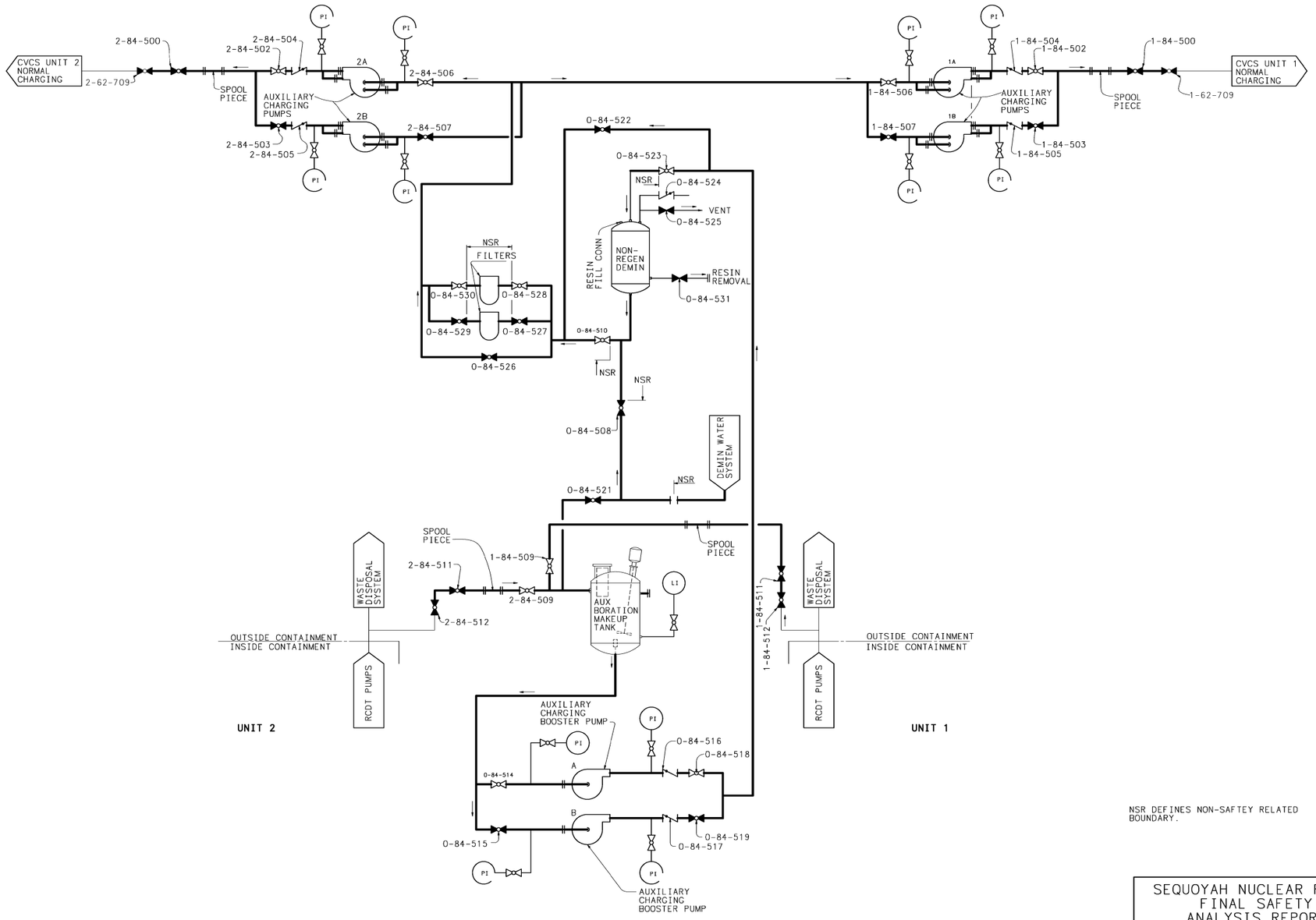

NSR DEFINES NON-SAFTEY RELATED BOUNDARY.

SEQUOYAH NUCLEAR PLANT
FINAL SAFETY
ANALYSIS REPORT

FIGURE 9.3.6-1

FLOW DIAGRAM - FLOOD MODE
BORATION MAKEUP SYSTEM
(REVISED BY AMENDMENT 13)

DRAWING SERVICES UNIT
PROCAD MAINTAINED DRAWING
THIS CONFIGURATION CONTROL DRAWING IS MAINTAINED BY THE SQN CAD UNIT AND IS NOW PART OF THE TVA PROCADAM DATABASE.
COMPUTER GRAPHICS

9.4 HEATING, VENTILATING, AND AIR-CONDITIONING

The Sequoyah Nuclear Plant heating, ventilating, and air-conditioning systems are designed to maintain the proper temperatures within the plant in all weather situations. To assure this capability, outside weather conditions for weather extremes in the plant area are used to size this equipment. These design bases climatic conditions are as follows:

Winter median of annual extremes, °F dry bulb	11
Winter design temperature, °F dry bulb	15
Winter relative humidity, maximum, percent	100
Coincident wind velocity	Light
Summer design dry bulb, °F	97
Summer design wet bulb, °F	78

In December through February, 99 percent of hourly readings have been equal to or above the winter design temperature. During the months of June through September, 99 percent of hourly readings have been equal to or below the summer design dry bulb temperature, and 99 percent have been equal to or below the summer design wet bulb temperature.

9.4.1 Control Building

9.4.1.1 Design Bases

The Control Building heating, ventilating, air-conditioning, and air cleanup systems are designed to maintain the temperature and humidity conditions throughout the building for the protection, operation, and maintenance and testing of plant controls; and for the safe, uninterrupted occupancy of the Main Control Room during an accident and the subsequent recovery period.

The Control Building air-conditioned spaces are maintained at approximately 75°F and 50 percent relative humidity for the protection of instruments and for the comfort and safety of the operators. These conditions are continuously maintained during normal and accident operation, except for evacuation of the main control room or in case of a fire.

During normal plant operation fresh air flow is induced to replace that which is being mechanically exhausted.

The Control Building outside air intakes are provided with radiation monitors and high temperature detectors that annunciate in the Main Control Room.

Isolation of the main control room occurs automatically upon the actuation of a safety injection signal from either unit or upon indication of high radiation or high temperature in the outside air supply stream to the building or manually by the operator from the MCR. Manual action by the operator, in lieu of the automatic control room isolation (CRI), is credited for CRI based on detection of smoke.

The following occur on a CRI signal:

1. The control room emergency air cleanup fans will operate to recirculate a portion of the control room air-conditioning system return air through the cleanup trains composed of HEPA filters and charcoal adsorbers.

2. The control room emergency pressurizing air supply fans will operate to supply a stream of outside air to the control room air-conditioning system to keep the control room pressurized to a positive 1/8-inch or greater w.g. relative to outside atmosphere and a slightly positive pressure relative to its surroundings, and also, to maintain a slightly positive pressure in other rooms in the habitability zone relative to adjoining spaces, minimizing the in-leakage of unprocessed or contaminated air. This fresh air is routed through the emergency air cleanup trains.

3. Fresh air will continue to be drawn in through the make-up air ducts for the electrical board room air handling units for the lower floors.

4. The exhaust fan in the toilet and locker rooms will be stopped and double isolation dampers closed to prevent the inflow of unfiltered outside air to the control room.

5. The spreading room supply and exhaust fans will be stopped and the battery rooms exhaust fan will continue to run.

6. Double isolation dampers in the spreading room fan supply duct and a single isolation damper in the exhaust fan duct will close to prevent infiltration of outside air to the spreading room.

7. Redundant isolation dampers close to prevent inflow of unfiltered air into the control room and spreading room from the normal path of induced fresh air.

8. The Auxiliary Building shutdown board room pressurizing fans (EL. 734') will be stopped to prevent in-leakage of unfiltered air from adjacent spaces into the Control Room.

Main CRI may be accomplished manually at any time by the control room operators.

The following safety related control building air-conditioning and ventilating system components are each provided with two 100-percent capacity units. Each meets the single failure criterion, and automatic switchover is assured if one of the units fail.

1. Main Control Room and electrical board room air-conditioning systems, refrigerant compressors, air handling units, and piping.

2. Main Control Room emergency air cleanup supply fans and filter assemblies.

3. Main Control Room emergency pressurizing air supply fans.

Fresh air, for control room emergency pressurizing, is taken from the outdoors from either of two intakes. One is located near the south end of the building roof at elevation 752 and the other is tied into the fresh air intake on the roof at the north end of the building.

All air-conditioning equipment, essential ventilating equipment, isolation dampers, and ducts are designed to withstand the Safe Shutdown Earthquake (SSE).

All air-conditioning and essential ventilating equipment are protected from the effects of a design basis tornado (Section 3.3.2), by dual tornado isolation dampers, located at all external openings to the Control Building.

9.4.1.2 System Description

The Control Building heating, ventilating, air-conditioning, and air cleanup systems are shown in Figure 9.4.1-1 and consist of the following systems:

1. MCR air-conditioning system and electrical board rooms air-conditioning system.

2. Main Control Room emergency air cleanup system.

3. Main Control Room emergency pressurizing system.

4. Battery room ventilating system.

5. Miscellaneous ventilating systems.

The Main Control Room air-conditioning system equipment is located in the mechanical equipment room at elevation 732 and serves the main control room, technical support center, and other rooms on that elevation. The electrical board rooms air-conditioning system equipment is located in the mechanical equipment room at the north end of elevation 669, and serves the battery rooms, battery board rooms, communications rooms, and other rooms on elevation 669, and the computer and auxiliary instrument rooms at elevation 685.

Each of the above two air-conditioning systems is provided with two parallel 100 percent capacity refrigerant condensing units, and two parallel 100-percent capacity air handling (fan-coil) units. The refrigerant condensing units in each equipment room are separated by a concrete partition. Each air-conditioning system is provided with an assemblage of air supply and return ducts, dampers, heaters, grilles, and controls.

Conditioned air is supplied by either one of the control room system air handling units to the main control room, the relay room, technical support center, and several small rooms at the elevation 732 floor. During normal operation fresh air flow is induced by the mechanical equipment room's negative pressure to replace that mechanically exhausted to the outdoors or supplied to the spreading room.

Conditioned air is supplied by either set of electrical board rooms air handling units to the air-conditioned rooms at the elevation 669 and elevation 685 floors. Fresh air flow is induced to replace that mechanically exhausted to the outdoors.

All air, fresh and recirculated, is filtered by passing through one of two-100 percent capacity filter banks provided for each air-conditioning system, one per air handling unit. This arrangement provides for one filter bank per air-conditioning system to be in continuous service while the other bank is on standby and available for servicing. Fresh air for the Control Building is passively taken from the outdoors through a penthouse located on the roof at the north end of the building. The air flow is induced by the exhaust fans located within the Control Building.

The control room air-conditioning system and the electrical board room air-conditioning system are each served by two separate full-capacity air cooling assemblies. Each assembly consists of

a helical screw-type refrigerant compressor with water-cooled condenser which is connected to a horizontal upblast type air handling unit containing direct-expansion air cooling coils and fans.

During normal operation, air exhausted to the outdoors by the building exhaust fans is replaced by a continuous stream of fresh air which is induced by the elevation 732 mechanical equipment's room negative pressure and the suction of the elevation 669 electrical board room's air handling unit.

During accident conditions, double isolation dampers automatically close to prevent the supply of fresh air to the main control room and spreading room floors. Induced air flow to the rooms of the lower floors are provided to replace the air exhausted from the battery rooms to maintain these rooms at a negative pressure relative to the Main Control Room.

The Main Control Room emergency air cleanup system is located within the mechanical equipment room at elevation 732. This system is provided with two parallel 100-percent capacity emergency air cleanup fans, and two parallel 100-percent capacity air cleanup filter / fan assemblies. Each air cleanup filter assembly consists of a bank of HEPA filters followed by a bank of charcoal adsorbers enclosed within a housing. Each housing is provided with static pressure differential indicators, thermometers, connections for in-place testing of filters and adsorbers, and access doors for filter and adsorber maintenance.

This system automatically operates upon a safety injection signal, a high radiation signal in the fresh air supply, or high temperature in the fresh air supply. Manual action by the operator, in lieu of the automatic control room isolation (CRI), is credited for CRI based on detection of smoke. This system can also be manually started from the Main Control Room at any time. Controls are provided to permit the control room operators to shut down either one of the redundant emergency air cleanup/pressurizing systems to keep it as a backup. The backup system automatically starts in the event the operating system fails. The same controls for operating one of the air cleanup units also operates the corresponding emergency pressurizing fan.

During air cleanup system operation, a portion of the control room air-conditioning system return air is continuously routed through one or both of the HEPA filter-charcoal adsorber trains and then to the system return air plenum. The cleaned air is then recirculated to the Main Control Room by the air-conditioning system.

The Main Control Room emergency air cleanup fans are the vane-axial type, each rated for 4000 cfm against 5.0-inch water gauge static pressure and are each direct driven by a 10-hp motor. These fans are redundant ESF equipment and are connected to separate divisions of the Emergency Power (EP) System.

The Control Building emergency air pressurizing supply fans are the centrifugal type, each having a capacity of 1000 cfm when used in conjunction with an air cleanup unit fan and are each driven by an approximate 0.25-hp motor. These redundant fans are ESF equipment and are connected to separate divisions of the EP System.

The fresh or pressurizing air is taken from either of two air intakes, one on the Control Building roof at elevation 752 near the south end of the building and the other is tied into the fresh air

intake at the north end of the building. Each emergency pressurizing fan is duct connected to both intakes. Each emergency pressurizing supply fan discharges to the control room air-conditioning system return air at a point upstream of the air cleanup filter assembly trains.

The Main Control Room is pressurized with filtered outdoor air during operation of the control room emergency air cleanup system. The maintenance of at least 1/8-inch w.g. positive pressure in the main control room relative to outside atmosphere and a slightly positive pressure relative to its surroundings and also, maintenance of a slightly positive pressure in other rooms in the habitability zone relative to adjoining spaces minimizes the in-leakage of unprocessed air.

The battery rooms ventilation system consists of three 100 percent capacity exhaust fans, with two on standby, discharging battery room air to the outdoors. Two fans are located on the elevation 669 floor near the north end of the building and one located on the elevation 706 floor near the south end of the spreading room. During control room isolation, a continuous stream of fresh air is drawn in through the electrical board room's air handling unit to replace that exhausted from each battery room.

The battery room exhaust fans are the centrifugal type, each rated 2000 cfm against 1.5 inch water gauge static pressure and are each direct driven by 1.5 hp motor.

The battery rooms ventilation system is required to operate at all times, except during the design basis flood, and are under administrative operational control. These three fans are ESF equipment and are connected to the EP System. The fans will be disconnected from the Class 1E power system before they are flooded.

The spreading room is ventilated by one of two spreading room exhaust fans located at the south end of the spreading room at elevation 706. These 100 percent capacity fans each exhaust to the outdoors. One spreading room supply fan, located in the mechanical equipment room at elevation 732, supplies air to the spreading room.

The spreading room supply fan is a centrifugal type, rated for 3200 cfm against 1.25 inch water gauge static pressure and is belt driven by a 1.5 hp motor. The spreading room exhaust fans are the centrifugal type, each rated for 2500 cfm against a 1.0 inch water gauge static pressure and are each belt driven by a 1.5 hp motor. These fans are not connected to the EP System. During control room isolation the spreading room supply and exhaust fan are cut off and isolation dampers close to prevent leakage of unfiltered air into the control room.

The mechanical equipment room at elevation 732 is normally ventilated by the passage of air-conditioning system return air to the system air handling unit and to the spreading room supply fan. During an accident, a portion of the control room air-conditioning system return air is routed through the mechanical equipment room to the system air handling unit and to the air cleanup fans.

The mechanical equipment room at elevation 669 is ventilated at all times by routing a portion of the electrical board rooms air-conditioning system supply and return air through the room to the air-conditioning return air duct.

The toilet, kitchen, and locker rooms at elevation 732 are ventilated by exhausting a portion of the control room air-conditioning system return air through the rooms. The toilet and locker

rooms exhaust fan is located in the elevation 732 mechanical equipment room and discharges to the outdoors.

The toilet and locker rooms exhaust fan is a centrifugal type, rated for 1200 cfm against 1.0 inch water gauge static pressure and belt driven by a 0.75 hp motor. This fan is not connected to the EP System. During control room isolation the toilet and locker rooms exhaust fan is shutdown and double isolation dampers close to prevent leakage of unfiltered air into the control room.

9.4.1.3 Safety Evaluation

The Control Building air-conditioning systems are redundant ESF, and each full-capacity compressors and air handling units is served from separate trains of the EP System and from coordinated separate loops of the Essential Raw Cooling Water (ERCW) System.

All Main Control Room equipment will operate normally within the rated temperature range as described in Section 3.11. At temperatures above 104°F, failure rates for this control room equipment may tend to rise somewhat and some instrumentation inaccuracies may arise. The full-capacity air-conditioning system redundancy discussed above, however, reduces the probability of overtemperature operations to acceptably small values. Loss of ventilation problems are discussed further in Section 3.11.3.

The Control Building tornado dampers protect the building environment from depressurization during a tornado. Indications in the MCR and elevation 732 mechanical equipment room will confirm that the dampers have closed. Tornado dampers located in areas exposed to freezing weather conditions can be monitored to ensure their closing; however, a tornado occurring during freezing weather conditions is unlikely. Motive power to the tornado dampers is normally de-energized to prevent spurious isolation of flowpaths needed for emergency pressurizing system operation.

The air cleanup equipment installed to purify air supplied to the main control room during emergencies was designed in accordance with accepted ESF design practices. As a result, good general agreement with Regulatory Guide 1.52 standards for air cleanup equipment is achieved. Details on this compliance are given in Table 9.4.1-1.

Each of the Control Building emergency air cleanup filter trains consists of a bank of four HEPA filter cells rated at 99.97 percent efficiency based on DOP test and designed for use in temperatures up to 250°F and a relative humidity of 90 percent. These filters are mounted in series with a bank of 12 carbon adsorber modules rated at 95 percent efficiency for removal of elemental iodine and 95 percent efficiency for removal of methyl iodide. Each HEPA filter cell is rated for an initial resistance of 1.0 inch water gauge when clean and should be replaced with new filter cell upon an increase in combined resistance of the HEPA and charcoal absorber banks to 3.0 inches. Static differential pressure gauges are provided to indicate filter band differential pressure.

For discussions on radioactivity dose levels and detection of airborne contaminants, refer to Section 6.4, Section 12.2.4, and Section 15.5.3.

9.4.1.4 Tests and Inspection

The Control Building emergency air cleanup and pressurizing air supply systems are periodically inspected and tested in accordance with plant Technical Specifications.

HEPA filters are tested in place initially and periodically with DOP. The charcoal adsorbers are tested initially and periodically with Freon. Charcoal surveillance specimens are periodically evaluated to assure iodine adsorptivity. These tests are performed in accordance with plant Technical Specifications.

The air-conditioning system filter cells shall have their filtering media replaced upon a resistance buildup to 1 inch water gauge static pressure differential.

9.4.2 Auxiliary Building

9.4.2.1 Design Bases

The Auxiliary Building ventilating systems serve all areas of the Auxiliary Building including the radwaste areas and the fuel handling area. Separate subsystems are utilized for the environmental control of the shutdown board rooms, auxiliary board rooms, and other miscellaneous rooms and laboratories. The ventilating systems also incorporate individual cubicle coolers to provide supplementary cooling to specific safety feature equipment.

The Auxiliary Building ventilating systems are designed to maintain acceptable environmental conditions for personnel access, operation, inspection, maintenance, testing and protection of mechanical and electrical equipment, and controls and to limit the release of radioactivity to the environment during all weather conditions. These building environmental controls systems maintain the building temperatures with limits (Section 3.11). For outdoor design conditions, see Section 9.4.

The Auxiliary Building is considered divided into five separately controlled and isolated types of areas as follows:

1. The fuel-handling area at elevation 734; the penetration rooms at elevation 734 and elevation 759; and the fuel, waste and cask handling areas at elevation 706 and elevation 669, and the unit 1 ESF pump rooms.

2. The General Building and penetration room areas at elevation 653, elevation 669, elevation 690, elevation 714, and Unit 2 ESF pump rooms.

3. The shutdown board, auxiliary control, and battery board rooms at elevation 734, and auxiliary board room and battery rooms at elevation 749.

4. The shutdown board transformer rooms at elevation 749.

5. The Reactor Building steam valve rooms.

To control airborne activity, the ventilation air is supplied to clean areas, then routed to areas of progressively greater contamination potential. Areas of the building which are subject to

radioactive contamination are maintained at a slight negative pressure to limit out-leakage. In addition, the system has the capability of isolating the contaminated areas from the outdoors. During non-accident operation, air is discharged into the Auxiliary Building exhaust stack which is located atop the Auxiliary Building, and extends above the roof.

The Auxiliary Building Gas Treatment (ABGT) System is discussed in Section 6.2.3.

9.4.2.2 System Description

The Auxiliary Building ventilation systems are shown on Figures 9.4.2-1 through 9.4.2-5.

The Auxiliary Building ventilation and cooling systems consist of the following subsystems:

1. Building air supply and exhaust system (general ventilation).
2. Building cooling system (chilled water).
3. Safety feature equipment coolers.
4. Shutdown board room air-conditioning system.
5. Auxiliary board room air-conditioning system.
6. Shutdown transformer room ventilation system.
7. Miscellaneous ventilation and air-conditioning systems.

9.4.2.2.1 Auxiliary Building Air Supply and Exhaust Systems (General Ventilation)

This system is non safety related except as necessary for Auxiliary Building Isolation and ABGTS operation (see section 6.2.3). The supply system filters 100 percent of outdoor air through a bank of filters for each of two mechanical equipment rooms located at opposite ends of the building at elevation 714. The filters have a nominal efficiency of 85 percent based on the NBS atmospheric dust spot test.

During heating season, hot water can be supplied to heating/cooling air intake coils to temper the incoming air.

During cooling season, chilled water can be supplied to heating/cooling air intake coils to increase cooling capacity of ventilation air. During moderate ambient temperatures, unconditioned air is supplied.

The air supply system utilizes four 50 percent capacity supply fans with two located in each of the two mechanical equipment rooms at elevation 714. During normal operation, one fan in each equipment room is in operation with the other fan in the standby mode.

Fan inlet dampers can be manually operated to reduce the volume of supply air such as during low outdoor temperature conditions to conserve heat. Supply air is ducted to various clean or

accessible areas of the Auxiliary Building and fuel handling areas from where it flows to areas of progressively greater contamination potential before being exhausted through a duct system by the building exhaust fans.

The building supply fans are belt-driven centrifugal type located downstream of the heating/cooling coils. Each fan is rated at 100,000 cfm at 5.75 inch water gauge static pressure. Each fan is driven by a nominal 150 hp motor. These fans are not ESF equipment and are not energized from emergency power.

The general exhaust from the Auxiliary Building is provided by four exhaust fans each rated at 50 percent of system capacity. These fans are controlled in blocks of two; during normal operations two fans are in operation and the remaining fans are in the standby mode. These fans are located on the roof of the Auxiliary Building and discharge into the Auxiliary Building exhaust vent.

Air utilized to ventilate the fuel handling area, waste packaging area, unit 1 ESF pump rooms, and cask shipping area is exhausted by the fuel handling area exhaust fans. An exhaust duct system from the waste packaging area and cask loading area is connected to a duct system around the periphery of the spent fuel pit and fuel transfer canal.

Thus, exhaust air from the fuel handling area passes across the spent fuel pit forming an air curtain across the pool. Two 100 percent capacity fuel handling area exhaust fans are provided. Pre-filters and HEPA filters are installed in the filter plenum room located on elevation 749 for Fan A prior to fan discharge. Fan B has no filter plenum or filters installed. Both fans discharge to the Auxiliary Building exhaust stack. During normal operation either fan may be used, however, during an outage or periods when maintenance is being performed in the transfer canal it is preferable that Fan A be used since it provides the only filtered exhaust path.

An inlet damper, furnished with each Auxiliary Building exhaust and fuel handling area exhaust fan, is used to regulate the volume of air exhausted as required to maintain 1/4 inch water gauge negative pressure within the building. These dampers are automatically operated by static pressure controllers.

Upon smoke detection within the Auxiliary Building general air supply ducts, the Auxiliary Building general supply and exhaust fans and the fuel handling exhaust fans are automatically stopped.

During periods of high radiation detected in the Auxiliary Building exhaust vent monitor or fuel handling area radiation monitor, upon initiation of a containment isolation signal or a high temperature signal from the Auxiliary Building air intakes, the Auxiliary Building supply and exhaust fans and the fuel handling exhaust fans are automatically stopped. Low leakage dampers located in the ducts which penetrate the Auxiliary Building are closed. An isolation barrier is thus formed between the building and the outdoor environment, and the ABGT System is placed in service (see Section 6.2.3).

The Auxiliary Building exhaust fans are belt-driven centrifugal type rated at 84,000 cfm each at 6 inch water gauge static pressure. Each fan is driven by a nominal 125-hp motor.

The fuel handling exhaust fans are belt-driven centrifugal type rated at 60,000 cfm at 7 inch water gauge static pressure. Each fan is driven by a nominal 100 hp motor. These fans can be energized by emergency power since they are required to operate under certain conditions when normal power is unavailable.

9.4.2.2.2 Building Cooling System (Chilled Water)

The purpose of the non safety related auxiliary building cooling system is to supplement the general ventilation system and to maintain a more comfortable temperature in Auxiliary Building general spaces at conditions other than design maximum.

The building cooling system consists of two 100 percent capacity packaged water chillers, two 100 percent capacity primary loop circulating pumps, two 100 percent capacity secondary loop circulating pumps, six fan-coil type air handling units, and associated piping, duct work and controls.

Primary and secondary chilled water circulating loops are designed for mixing supply and return water to obtain a variable coil inlet temperature, mainly 47°F to 72°F, to minimize unnecessary latent heat removal. The primary loop pump provides circulation of water through the water chiller, whereas the secondary loop pump circulates chilled water to air intake heating/cooling coils and also to the six air handling units located in various areas where ventilation air alone is not sufficient to maintain the 104°F maximum space temperature.

The chilled water system is designed for manual startup with automatic mixing of primary and secondary loop flows by means of thermostatically controlled three-way control valves. Flow to heating/cooling coils and to air handling units is individually controlled at each terminal unit by three-way modulating control valves. The seasonal change over from heating to cooling or from cooling to heating is done by the manual operation of system valves.

During outages the chilled water system may be used to temporarily cool the lower containment area by providing the medium to cool the normally supplied cooling water i.e., the Essential Raw Cooling Water (ERCW) to the lower compartment coolers via a temporary heat exchanger.

9.4.2.2.3 Safety Feature Equipment Coolers

Cubicles or areas containing engineered safety feature equipment are ventilated by the non safety related auxiliary building ventilation exhaust system during normal plant operation or when the equipment is not required to operate. Safety related air cooling units, located in each cubicle or area, will automatically start to provide necessary cooling, depending on its specific logic, whenever an ABI occurs or the safety feature equipment is operated or when the room temperature exceeds the thermostat setpoint. Each of these coolers is designed to maintain the room temperature within the required limits (see Section 3.11). The pump room coolers 1 thru 4 listed below are interlocked to operate with the equipment they serve. A thermostat, located near the return airflow to each cooler, allows the cooler to remain in operation until the low limit temperature set point is reached. The cooling water control valve and fan are interlocked to operate together except for the RHR and CCP pump room cooler control valves which are failed open.

Air cooling units are provided for the following equipment and areas:

1. RHR pumps.
2. Safety injection pumps.
3. Containment spray pumps.
4. Centrifugal charging pumps.

5. Deleted.

6. Unit 1 auxiliary feedwater and component cooling water pumps.

7. Unit 2 auxiliary feedwater and boric acid transfer pumps.

8. Component cooling water booster and spent fuel pit pumps.

9. Pipe chases.

10. Elevation 669 penetration rooms.

11. Elevation 690 penetration rooms.

12. Elevation 714 penetration rooms.

13. Emergency gas treatment filters.

The above pumps 1 through 4 are each located in a separate room with a single cooler, and each room (containing pump and cooler) is provided with another opposite train room and cooler for 100 percent redundancy. Pumps and equipment 6 through 13 are each provided with two 100-percent redundant coolers.

The air flow paths for each of the coolers is shown in Figure 9.4.2-3. The ERCW is discussed in Section 9.2.

9.4.2.2.4 Shutdown Board Room Air-Conditioning System

The shutdown board rooms are located on elevation 734 of the Auxiliary Building. The boards in either unit can provide the service necessary for the safe shutdown of both plant units following an accident in either unit.

Environmental control for the auxiliary control room is maintained by the safety related shutdown board room air-conditioning system. Each of the four shutdown board room air-handling units is arranged so that any one of the four units can provide the necessary cooling required by the auxiliary control room. A duct heater, provided in the supply duct to the room, provides heating and/or humidity control as required to maintain the design ambient conditions. Each shutdown board room air-conditioning system is connected to coordinated emergency power and water supply source trains.

The pressurizing fans pressurize the shutdown board rooms and auxiliary control room with filtered air to prevent infiltration of contaminated plant air from adjacent areas except during Control Room Isolation.

9.4.2.2.5 Auxiliary Board Rooms Air-Conditioning Systems

The Auxiliary Board Rooms, located at floor elevation 749 are separated into four sub-areas corresponding to the unit and train emergency power supply. Four separate safety related air-conditioning systems are provided. One in each of the four plant sub-areas. Following an accident, the train A or train B boards have the capability for the safe shutdown of the unit.

The attendant air-conditioning equipment for each sub-area, sized to remove 100 percent of heat produced by electrical equipment in that subarea, are therefore redundant. The four Auxiliary Board Room Air-conditioning units normally cool the four sub-areas (Train A and B areas of Units 1 and 2) individually. A connecting duct ties together the Train A air-conditioning discharge headers from both Units 1 and 2. A similar connecting duct ties together the Train B air-conditioning discharge headers from both Units 1 and 2. These connecting ducts have normally closed isolating dampers and fire dampers to provide for unit separation. If an air-conditioning unit is unavailable, the connecting duct can be used to support the cooling of the two connected sub-areas. This is done manually by isolation damper re-alignment and by adjusting the throttled position of a damper installed at each header discharge point for the required flow. Thus, the four sub-areas can be cooled by as few as two air-conditioning units.

The train A air-conditioning equipment is located within the elevation 749 mechanical equipment room. The train B air-conditioning equipment is located on the 763 roof above within a housing for protection from outdoor environmental hazards.

Each board room air-conditioning system contains a refrigerant compressor, air-cooled condenser, a fan-coil air handling unit with direct-expansion cooling coil(s), two 100 percent pressurizing air supply fans, air supply distribution system, and control and safety devices.

Two 100 percent capacity safety related roof ventilator exhaust fans located on the roof of each of the four separate battery rooms on elevation 749 provide continuous ventilation to prevent the possible accumulation of dangerous hydrogen gas.

The two 100 percent capacity safety related pressurizing air supply fans per air- conditioning system serve a twofold purpose. One is to replace a portion of air-conditioning system air exhausted through the battery room and the other is to pressurize the board room to prevent infiltration of contaminated plant air from adjacent areas. The mixture of this makeup air and board room return air is conditioned upon passing through the air handling unit.

One pressurizing air supply fan and one battery room exhaust fan in each individual air-conditioning system are connected to train A power with the other fan pair connected to train B power. Control system interlocks provide simultaneous operation of the pressurizing air supply fan and battery room exhaust fan. The availability of this fan combination on either power train ensures continuous ventilation in each battery room regardless of operability of the direct-expansion air-conditioning equipment. In the event of air-conditioning system failure, pressurizing fan air is drawn through the normal board room supply ducts by the battery room exhaust fan.

Condensing unit cooling air for the train A air-conditioning system of each plant unit is routed from intakes located on the roof, elevation 763, through the condenser and discharged through a roof-mounted exhaust housing. The train B system condenser cooling air is drawn through an intake on the side of the equipment housing on the roof and is discharged through an exhaust opening atop the equipment housing.

Dampers capable of withstanding pressure differentials between areas of the elevation 749 board rooms and mechanical equipment rooms and the outside environment under tornado conditions are located in the intake and exhaust connections for each of the train A air-cooled condensers.

Each battery room exhaust fan has a damper capable of withstanding pressure differentials imposed by tornado conditions. The dampers are mounted below the fans at elevation 763. Small ventilation holes are provided in damper frame between exhaust fan and tornado damper to allow continuous venting of hydrogen gas even when the damper is closed. Each of these dampers is remote manual operating and will be closed upon tornado alert.

For additional tornado protection, the train B air handling unit intake and discharge ducts, located in the rooftop housing, are capable of withstanding a minimum pressure differential of 0.5 lb/in^2 with the higher pressure being inside the duct.

9.4.2.2.6 Shutdown Transformer Room Ventilating Systems

The shutdown transformers, located on elevation 749, are divided into two sub-areas with seven transformers in each sub-area. These sub-areas are further divided into two enclosed areas with train A emergency power available to one transformer grouping and train B emergency power for the other.

Outside air enters each sub-area through air intake structures located on the Auxiliary Building roof. Each safety related roof-mounted ventilator type exhaust fan is energized by thermostatic control according to room temperature rise. Activation of a single ventilation fan will in turn open dampers in both air intake structures. Upon continued increase in room temperature, the remaining exhaust fans are energized in staged series sequence until all available fans are in operation.

Individual fans may be manually stopped if room temperature is below setpoint. Manually stopping the fans shall not interfere with automatic fan start upon future increasing room temperature.

The transformer room motor-operated air intake dampers have the capability of being remote manually powered to the open position without regard to thermostatic control following tornado alert.

This ventilation system is designed to maintain the temperature in the transformer rooms within the range from 15°F minimum and 97°F for which the equipment is environmentally qualified.

9.4.2.2.7 Miscellaneous Ventilation and Air-Conditioning Systems

The control rod drive equipment room has two 100 percent capacity non safety related air-conditioning units located within each room per plant unit that are cooled by Raw Cooling Water. During normal operation, one air-conditioning unit in each room is in operation with one on standby. Each unit is automatically controlled by a self-contained thermostat. Electric unit heaters are located in each room to maintain the room at 60°F, during heating season.

The instrument shop air-conditioning unit is non-safety related and utilizes 100 percent makeup air thus preventing the recirculation of any possible contaminant. The hot instrument shop ventilation is provided by a lab hood exhaust fan which discharges to the General Building Exhaust Duct System.

The sample room is ventilated by five non-safety related lab hoods with exhaust fans. Three fans are located on unit 1 side and two fans are located on unit 2 side. Air enters the sample room through doors with transfer grilles and back draft dampers. Each hood is provided with a separate exhaust fan and HEPA filter assembly. A differential pressure gauge is used to indicate the need for filter replacement. Each hood exhaust fan discharges into the Auxiliary Building General Exhaust System.

The turbine-driven auxiliary feedwater pump rooms are normally ventilated by the Auxiliary Building air exhaust system. Each room is provided with two roof ventilator type exhaust fans located on the roof. One of these two fans per room is quality related and designed to operate on 115 volt, 60 Hz alternating current emergency power while the other is safety related and designed

for 115 volt direct current station vital battery power. Both fans per room are thermostatically controlled to automatically operate upon room temperature rise. The direct current powered fan will also automatically run upon pump start and is designed to circulate a sufficient quantity of building air through their rooms to limit the maximum temperature (see Section 3.11).

The waste gas analyzer room is located in the sample room on unit 2. Air enters the waste gas analyzer room through a door with a transfer grille and a backdraft damper. Air is exhausted into the suction of both sample room exhaust fans on unit 2 and filtered through the sample room hood exhaust HEPA filter before being discharged into the Auxiliary Building General Exhaust Duct System.

The Reactor Building steam valve vault rooms each have an independent ventilation system consisting of two non safety related roof mounted exhaust fans. Each exhaust fan starts independently in response to temperature setpoints on individual thermostats. The fans draw outside ventilation air for room cooling through wall opening(s) near the floor. Space temperature control is maintained by inlet vanes which modulate airflow in response to a pneumatic temperature controller.

9.4.2.3 Safety Evaluation

The Auxiliary Building supply inlets are located near ground level on each side of the building. The inlet area is of sufficient size to limit the incoming air stream velocity to approximately 500 fpm. The building air supply filters are rated 85 percent efficiency based on NBS atmospheric dust spot test.

Auxiliary Building fuel handling areas, Reactor Building penetration rooms and other spaces located below elevation 734 are continuously maintained at a slight negative pressure relative to outdoors to minimize out-leakage. During normal operations, these spaces are exhausted to the outdoors. During accident conditions, the ABGT System operates to exhaust a reduced quantity of air from the Auxiliary Building Secondary Containment Enclosure through HEPA filters and charcoal adsorbers before release to the environs.

Each ABGTS filter bank is provided with a static pressure differential indicating gauge. ABGTS HEPA filter cells are rated for an initial resistance of approximately 1.0-inch water gauge when clean and should be replaced upon an increase in combined resistance of the HEPA and charcoal adsorber banks to 3.0 inches.

To guarantee proper operation of steam relief valves during plant operation, the steam valve room exhaust air dampers modulate in response to a pneumatic temperature controller to ensure that room ambient temperatures do not fall below 80°F during the heating season. In the event extreme outside winter time conditions result in room temperatures falling below 80°F, the fans are automatically shut down.

9.4.2.4 Inspection and Testing Requirements

The Auxiliary Building Environment Control Systems and ABGTS are accessible for periodic inspection and tested initially and periodically.

ABGTS HEPA filter and charcoal absorber cells are tested in place initially and periodically in accordance with Tech. Specs.

9.4.3 Radwaste Area

9.4.3.1 Design Bases

The Auxiliary Building ventilating systems serve all of the radwaste areas which are physically located within the Auxiliary Building at elevation 706, 690, 669, and 653. These areas are continuously ventilated, and the exhaust air is released to the atmosphere.

The Auxiliary Building is continuously maintained at a slight negative pressure relative to the environment to minimize exfiltration of air. A radiation-monitoring system is provided to detect and annunciate high activity in the auxiliary building exhaust and provides for Auxiliary Building Isolation.

9.4.3.2 System Description

The Auxiliary Building radwaste area ventilating systems are shown on Figure 9.4.2-1, 9.4.2-4, and 9.4.2-5

Filtered and heated or cooled (if necessary) fresh air is mechanically supplied to the general occupied or accessible areas of each floor by the Auxiliary Building main air supply system. Air is mechanically exhausted from each radwaste equipment room and directly from individual radwaste tanks, sumps, and equipment by the Auxiliary Building Main Exhaust System. All exhaust air is routed through duct to the building exhaust stack.

9.4.3.3 Safety Evaluation

Refer to Auxiliary Building FSAR Section 9.4.2.3.

9.4.3.4 Test and Inspection Requirements

Refer to Auxiliary Building FSAR Section 9.4.2.4.

9.4.4 Turbine Building

9.4.4.1 Design Bases

The Turbine Building Heating, Cooling, and Ventilating Systems are designed to maintain an acceptable building environment for the protection of plant equipment and controls; for the comfort and safety of operating personnel; and to allow personnel access for the operation, inspection, maintenance, and testing of mechanical and electrical equipment. These systems are non-safety related.

9.4.4.2 Ventilation

The building can be considered to contain four large rooms: elevation 732.0 turbine room, elevation 706.0 spaces, elevation 685.0 spaces, and elevation 662.5 spaces. Because elevation

732.0 floor is predominantly concrete and thus isolated from the remaining floors below, the Turbine Building ventilation is provided by two separate systems. One system serves elevation 732.0 spaces, and the other system provides ventilation for the spaces on elevation 706.0 and elevation 685.0, with no direct ventilation provision for spaces on elevation 662.5.

Basically, both ventilation systems operate on the basis of mechanically supplying a continuous flow of outside air to spaces being ventilated, and exhausting the building air to outdoors.

Each supply and exhaust fan, except the lube oil purification exhaust fan, is provided with a motor operated damper designed to automatically close when fan is stopped to prevent air backflow.

Outside air is distributed to areas of heat concentration either by duct distribution systems, or is induced, by the negative pressure caused by operation of roof exhaust fans, through strategically located air intake openings.

9.4.4.2.1 Elevation 732.0 Ventilation

Ventilation system for elevation 732.0 consists of two mechanical air supply systems, one on the east side and the other on the west, free-air- intake openings on the north and south walls, and exhaust fans on the elevation 797.0 roof. Total air exhausted is approximately 570,000 cfm, whereas only approximately 206,000 cfm is mechanically supplied through supply ducts. The remaining air is drawn through the north and south free-air-intake openings by the negative pressure created by the operation of exhaust fans. Two centrifugal, belt-driven, two-speed supply fans located in the elevation 773.0 fan rooms, deliver air to the east side of the elevation 732.0 room through two separate duct systems. Two centrifugal, belt-driven, two-speed supply fans, located in elevation 732.0 fan room, supply air to the west side of the elevation 732.0 room through two separate duct systems.

Ten centrifugal belt-driven roof ventilator fans and ten roof ventilator fans together exhaust a total of approximately 570,000 cfm building air.

During cold weather, all intake and exhaust openings can be closed off by motor-operated dampers to conserve heat. The building may also be kept under a slight positive pressure to prevent infiltration of cold air by keeping the east elevation 685 floor supply fans running at half speed. Hot water heating coils installed in the ducts are designed to heat the incoming outside air to 60 degrees F.

9.4.4.2.2 Elevation 706.0 & Elevation 685.0 Ventilation

Elevation 706.0 and elevation 685.0 ventilation system consists of two mechanical air supply systems, one on the east side and the other on the west, and exhaust fans on the roof; elevation 732.0. A total of approximately 412,000 cfm is supplied and exhausted.

Four centrifugal, belt-driven, two-speed supply fans, located in elevation 773.0 fan room, deliver equal quantities of air to the east side of elevation 706.0 and elevation 685.0 rooms through four independent duct systems. Four centrifugal, belt-driven, two-speed supply fans, located in the elevation 732.0 fan rooms, deliver equal quantities of air to the middle of elevation 706.0

and elevation 685.0 rooms through four independent duct systems. Thirty-six propeller fans, installed in pairs in exhaust housings on the roof, elevation 732.0 exhaust air from the two floors below.

During cold weather, all supply and exhaust systems can be closed off by motor operated dampers to conserve heat. The two supply fans serving east elevation 685.0 floor may be operated at half speed since two hot water heating coils located in the supply duct connected to each of these fans are designed to heat the incoming air. With no exhaust fan running, the operation of these two supply fans will pressurize the entire Turbine Building to prevent infiltration of cold outside air.

9.4.4.2.3 Miscellaneous Ventilating Systems

The lubricating oil purification room at elevation 685 is ventilated by a centrifugal fan mounted on the room roof which discharges to the outdoors by means of a duct routed to a basement exhaust housing.

The lubricating oil dispensing room at elevation 706 is ventilated by a wall-exhauster type fan, and approximately 300 cfm is exhausted through the room.

The condenser vacuum exhaust bypass system, located on elevation 732.0, can be used to filter noncondensibles from the main condenser in order to minimize the releasing of radioactive particles and gases to the atmosphere. It consists of HEPA and charcoal filters (optional) in series. Refer to Section 10.4.2.

9.4.4.2.4 Coolers

To supplement the turbine building ventilation systems during peak cooling load conditions, fan-coil type raw water cooled cooling units have been installed. Each cooling unit consists of a centrifugal fan and its motor, and a finned tube type water coil through which raw cooling water is circulated and over which air is passed and cooled. Space coolers are located on floors elevation 706.0, elevation 685.0, and elevation 662.5. A thermostat, located near the return airflow to each cooler, controls a solenoid valve on the raw cooling water supply line to coil, and the cooler fan. Solenoid valve and fan on each cooler are interlocked to operate together.

Pumps and fans of the coolers assigned to them are interlocked to run simultaneously. Raw cooling water to each cooling coil can be turned off and on manually to conserve water during off times. These coolers are not controlled thermostatically.

9.4.4.2.5 Building Heating System

The Turbine Building is heated by thermostatically controlled unit and hot water space heaters strategically located throughout the building.

A portion of the fresh air supply to the elevation 685 floor is heated by thermostatically controlled duct-mounted heating coils.

The heating system is a medium-temperature hot water, closed, forced- water loop. The system consists of an assemblage of two 100-percent capacity water circulating pumps, two 70-percent

capacity steam to water heat exchangers, tanks, heating coils, space and unit heaters, nitrogen pressurization, demineralized water makeup, chemical treatment, controls, and supply and return water distribution piping. Steam is normally taken from the turbogenerator cold reheat cycle during operation of either unit, or is taken from the plant auxiliary boiler during plant shutdown or when both units are operating at low power.

The heating system heat exchangers, pumps, and tanks are located at elevation 706 along the east end of unit 2.

The Auxiliary Building air preheating portion of this heating system consists of a secondary forced-water loop system for each plant unit containing pump and 3-way temperature controlling valve. The valve is thermostatically controlled to supply outdoor air heated to approximately 60°F.

9.4.4.3 Safety Evaluation

The Turbine Building Ventilating and Heating Systems are designed to assure their reliable operation during normal plant operation and are not safety-related. The free air intake dampers, located along the north and south walls of the elevation 732.0 turbine room are designed to open if a power failure occurs. There is no safety-related equipment located in their immediate vicinity. If they become frozen open during winter, they may be manually deiced and closed.

9.4.4.4 Inspection and Testing Requirements

The Turbine Building Environment Control Systems are accessible for periodic inspection and tested initially and periodically as necessary.

9.4.5 Diesel Generator Building

9.4.5.1 Design Bases

The Diesel Generator Building Ventilating Systems are designed to maintain an acceptable building environment for the protection of the diesel generators, electrical boards and equipment, and for the safety of operating personnel.

Each diesel generator unit room is separately ventilated to limit the room maximum ambient temperature to 120°F when the entering air is 97°F and the diesel generator is operating.

The electrical board rooms are ventilated to limit the room ambient temperature to 104°F when the entering air is 97°F.

9.4.5.2 System Description

The Diesel Generator Building Heating and Ventilating Systems are shown on Figures 9.4.5-1.

Two diesel generator room exhaust fans and one electrical board room exhaust fan are located in the fan room at elevation 740.5 for each of the four diesel generator units. These centrifugal type exhaust fans discharge to the outdoors. One generator

and electrical panel ventilation fan is provided within each diesel room at the air supply opening to the room to deliver cooling air to the generator air intake and to the interior of the generator's electrical control panel. The original battery hood exhaust fans have been isolated from the system and abandoned in place.

Each of the diesel generator room fans is connected to its respective diesel generator engineered safety power supply. One exhaust fan will automatically start upon diesel generator start. The generator and electrical panel ventilation fan will run when the diesel is running. Approximately 40,000 cfm of fresh air is routed through each diesel generator room when one exhaust fan is operating.

Each diesel generator unit is provided with a fan designed to exhaust approximately 3500 cfm of air from the elevation 740.5 electrical board room. A roof mounted air intake admits outdoor air to each electrical board room. Other building exhaust fans provide ventilation for the lubricating oil storage room, fuel oil transfer room, CO_2 storage room, toilet room, radiation shelter room, and muffler rooms.

The oil and storage rooms are normally ventilated at all times while the electrical board rooms and muffler rooms are ventilated as required to remove heat during warm weather. However, the CO_2 and lube oil storage room, diesel generator rooms and electrical board rooms exhaust fans are stopped during a CO_2 initiation.

Each exhaust fan and the corridor air intake vent is provided with motor-operated shutoff dampers designed to close tight when the fan is not running.

A backdraft damper is installed in the duct between the air intake room 1A-A and the CO_2 storage room in order to prevent CO_2 backflow into the diesel generator air intake room in the event of a CO_2 system rupture.

Thermostatically controlled electric unit heaters are located within the diesel generator rooms, equipment access corridor, storage rooms, radiation shelter room, and electrical board rooms. These heaters are designed to maintain the rooms at not less than 50°F when 15°F outdoors.

Thermostats in each air exhaust room are designed to stop all operating diesel generator room fans upon a drop in room exhaust air temperature to below 68°F if the diesels are not running. The thermostats will automatically start the exhaust fans upon room temperature rise to 90°F. The thermostats will also start the standby exhaust fan, during diesel operation, when the room exhaust air temperature exceeds 90°F.

In the case of a tornado event the Diesel Generator Room Air Intake Dampers are opened by manual action as noted in section 3.3.2.2. For damper control see Figure 8.3.1-14.

9.4.5.3 Safety Evaluation

The Diesel Generator Ventilating Systems are required to operate for maintenance of plant safety in the event of natural disasters or plant accidents. The diesel units are redundant to each other and the diesel generator room main exhaust fans for each diesel unit are provided in pairs for reliability.

In the diesel generator building, the diesel generator room exhaust fans, electrical board room exhaust fans, and the generator and electrical panel ventilation

fans are designed to quality assurance and seismic category I requirements. (With the exception of the CO_2/fire protection electrical control interlocks). All these fans are connected to ESF power.

9.4.5.4 Test and Inspections

The Diesel Generator Building Ventilating and Heating Systems are accessible for periodic inspection and tested initially and periodically.

9.4.6 Condensate Demineralizer Building Environmental Control System

9.4.6.1 Design Basis

The Condensate Demineralizer Building (CDB) Environmental Control System (ECS) is a non-safety related system designed to supply an acceptable ventilation air flow to the CDB continuously and to supply increased air flow for heat removal as necessary. All cooling needs within the building are accomplished with ventilation air flow.

Heat is supplied by duct and space electric heaters when required. The duct heaters are interlocked with supply fans to prevent their operation upon fan failure. The heaters are designed to maintain the building at 50°F or higher except in the condensate polisher rooms where freeze protection is the design basis.

Supply and exhaust ductwork is designed in accordance with the SMACNA Low Pressure Duct Standard.

Air flow is from areas of lower radioactivity potential to areas of greater radioactivity potential. There is no requirement for exhaust monitoring or filtration.

9.4.6.2 System Description

Air is supplied to the building through air intakes located on floor elevation 706. An air intake is located in the north wall and auxiliary air intakes are located in the south and west walls. Air supplied through the air intake in the north wall and the auxiliary air intake in the south wall is ducted to the required release points throughout the building. Air supplied through the auxiliary air intake in the west wall is blown directly into the valve gallery.

Air is exhausted through two roof exhaust fans located on elevation 729 over the valve gallery. An additional roof exhaust, located on elevation 729, is connected by ductwork to tank rooms and the hall on elevation 685, and to the high crud filter room, condensate polishers rooms, and cation and anion tank rooms on elevation 706.

The CDB ECS uses two speed fans only. Main CDB control panel controls set the fans to automatic operation, high or low speed operation, or the off position. In the automatic mode of operation outdoor air temperature controls fan speed. When a fan is started its respective outdoor damper is opened. All air intake and exhaust dampers are spring loaded to fail closed.

Duct and space electric heaters operate to keep the building temperatures above 50°F. At low outside air temperature, the air intake and exhaust fans can operate at half speed and

approximately one third of the air flow can be recirculated building air. When the outside air temperature is higher, both the intake air fan and the exhaust fan can begin full speed operation.

9.4.6.3 Safety Evaluation

No nuclear safety-related systems or components are located in the Condensate Demineralizer Building. The CDB ECS is not safety related. Therefore, a single failure within the ECS will not affect nuclear safety.

9.4.6.4 Inspection and Testing Requirements

Satisfactory operation of the CDB ECS will demonstrate the system capability.

9.4.7 Reactor Building Purge Ventilating System

9.4.7.1 Design Bases

The Reactor Building Purge Ventilating (RBPV) System is designed to maintain the environment in the primary and secondary containment within acceptable limits for equipment operation and for personnel access during inspection, testing, maintenance, and refueling operations, and to limit the release of radioactivity to the environment.

The design bases include the provisions to:

1. Supply fresh air for breathing and contamination control when the primary or annulus secondary containment is or will be occupied.

2. Exhaust primary or annulus secondary containment air to the outdoors whenever the purge air supply system is operated.

3. Cleanup containment exhaust by routing the air through HEPA-charcoal filter trains before release to the atmosphere.

4. Provide a reduced quantity of ventilating air to permit occupancy of the instrument room during reactor operation. The provisions for 1., 2., and 3. above will apply.

5. Ensure an unimpeded closure of the containment isolation valves installed in the system penetrations on a Containment Vent Isolation (CVI) Signal.

9.4.7.2 System Description

The RBPV System is shown schematically in Figure 9.4.7-1. One complete and independent RBP System is provided for each unit.

The RBPV System provides for mechanical ventilation of the primary containment, the instrument room located within the containment, and the annulus secondary containment located between the Containment and Shield Building. The system is designed to supply fresh air for breathing, and contamination control to allow personnel access for maintenance and refueling operations. The exhaust air is filtered to limit the release of radioactivity to the environment.

The RBPV, in conjunction with the annulus vacuum control system, can be used to maintain containment pressure within acceptable limits during normal plant operations. RBPV valves are available to vent excess lower containment air directly into the annulus where the annulus vacuum control system will discharge the effluent through the auxiliary building exhaust vent. The effluent in this path is monitored for radiation in accordance with the ODCM. Containment venting is terminated in the event of a Phase A containment isolation signal or may be manually terminated following the detection of high radiation during the venting process.

During power operation, cooling of the Reactor Building upper compartment, lower compartment, and control rod drive mechanisms is accomplished by the air cooling systems discussed in Section 9.4.8. The annulus is normally maintained at a negative pressure by the annulus vacuum control subsystem of the EGT System as discussed in Section 6.2.3.

The containment upper and/or lower compartments are purged with fresh air, if needed, by the RBPV System before occupancy. The annulus can be purged with fresh air during reactor shutdown or at times when the annulus vacuum control system of the EGT System is shutdown. The instrument room is purged with fresh air during operation of the RBPV System or can be separately purged by the instrument room purge subsystem. Limitation on purge path alignments and duration of RBPV operation is stated in Technical Specifications.

Each purge system consists of two 50 percent capacity air supply fans, two 50 percent capacity air exhaust fans, two 50 percent capacity cleanup filter trains, instrument room supply fan, instrument room exhaust fan, air supply distribution system, air exhaust collection system, containment isolation valves, and system airflow control valves.

The purge air supply fans are located in the penetration room at elevation 714. Filtered fresh air, heated when required, is taken from the Auxiliary Building Air Supply Systems located in the mechanical equipment rooms at elevation 714 and is discussed in Section 9.4.2. These fans are designed to supply a total of approximately 28,000 cfm.

The purge air exhaust fans and air cleanup filter trains are located within the penetration room at elevation 690. The cleaned air is discharged to the outdoors by means of the Shield Building exhaust vent located in the annulus space of the Reactor Building and extending through the roof of the Reactor Building. These fans are designed to exhaust a total of approximately 28,000 cfm.

The purge air supply and exhaust fans are centrifugal type, each rated at 14,000 cfm. These fans do not receive emergency power.

The supply fans, exhaust fans, and air cleanup filter assemblies for each unit are connected and controlled in two 50 percent capacity trains. The controls are designed to have simultaneous starting and stopping of the matching supply and exhaust equipment. The controls are also designed to give an automatic shutdown and isolation upon receipt of containment ventilation isolation signal. Upon failure of a fan, system redundancy will provide 50 percent capacity.

Each air cleanup filter plenum contains a bank of prefilters, a bank of HEPA filters, and a bank of charcoal adsorbers. Each plenum is provided with static pressure differential indicators, thermometers, connection for inplace testing of filters and absorbers, and access doors for filter and adsorber maintenance.

The system air supply and exhaust ducts are routed through the secondary containment to several primary containment penetrations. Two air supply locations are provided for each of the upper and lower compartments and one for the instrument room. Several air pickup points are located to exhaust air from the lower compartment and instrument room and to provide an air sweep across the surface at the refueling canal.

Annulus purging air is taken from system ducts which is routed through the annulus. These air supply and exhaust duct openings are located approximately 180° apart for maximum ventilation.

The primary containment penetrations for the ventilation supply and exhaust subsystems are designed to primary containment requirements. These are discussed in detail in Section 6.2.4, Containment Isolation Systems.

Each purge system containment penetration is provided with both inboard and outboard air-operated isolation butterfly valves designed for minimum leakage in their closed position. A similar type of valve is mounted in each purge supply and exhaust air opening for the annulus, and in each of the systems main supply and exhaust duct located exterior to the Shield Building. Each of the above butterfly valves is designed to fail closed and to be normally closed during purge system shutdown.

The containment purge penetrations are safety-related in that they must not jeopardize the integrity of the containment boundary. These penetrations are designed to withstand (with essentially zero leakage) the forces produced by a Loss-of-Coolant Accident (LOCA), or a Main Steam Line Break (MSLB). The penetrations are provided with an isolation mechanism which is activated by the initiation of the Containment Ventilation Isolation Signal. The isolation mechanism has 100 percent redundancy in both equipment and power sources. The system also isolates upon detection of high radiation in the purge exhaust.

Screens are provided inboard of the inboard containment isolation valve on both supply and exhaust to prevent foreign material from restricting isolation valve closure. They are provided on purge line penetrations X-4, X-5, X-10A, X-10B, X-11, and X-80, and consist of 10 gauge steel wire on 2 mesh back by reinforcing bars. The screens are quality group C and Seismic Category I. These screens are approximately one valve diameter away from the valve pivot. Purge line penetrations X-6, X-7, X-9, X-9B do not have debris screens because their physical location precludes the need for protection from accident blowdown debris in order to ensure proper valve closure.

To permit personnel access to the instrument room during reactor operation or during purge system shutdown, the room can be purged by the instrument room purge subsystem fans (approximately 800-900 CFM). These subsystem supply and exhaust fans are located alongside the main system supply and exhaust fans and will use the main system ducts and filter train. Valves are manually positioned to allow only the instrument room to be ventilated.

The instrument room purge air supply and exhaust fans are centrifugal type.

9.4.7.3 Safety Evaluation

Portions of the containment purge system are engineered safety features. All supply and exhaust penetration isolation valves and piping between these valves have a Nuclear Safety Class designation in accordance with ANS Safety Class 2A. Refer to Section 6.2.4. Other portions of the exhaust system are designated ANS Safety Class 2B.

The RBPV fans and filters are not engineered safety features and credit for LOCA mitigation is not claimed. Containment Ventilation Isolation signals automatically shuts down the fans and

includes interlocking dampers and backdraft dampers where provided, and closes the containment purge penetration butterfly valves and annulus secondary containment butterfly valves, thereby isolating the containment purge systems. The purge exhaust paths to the shield building exhaust stack also have isolation valves that are manually controlled. Each purge system butterfly valve, including those provided for containment penetration isolation, is designed for fail-safe closing. Those used for containment penetration isolation fail close within 4 seconds. Valve travel stops were installed on the containment isolation valves to prevent the valves from opening greater than 50 degrees to assure adequate closure time is achievable to mitigate the consequences of design basis accidents (Reference 9.4.11-1). Temporary removal of the valve travel stops is permitted in Mode 5 and in Mode 6, when reactor core alterations and nuclear fuel movement are not being implemented, to accelerate the containment purging process to support outage activities. Removal of the valve travel stops may require the alteration of the normal control and logic functions to purge containment with the valves in an open position greater than 50 degrees. Valve travel stops shall be re-installed and valve travel verified for select plant operations in accordance with Technical Specifications.

The purge containment isolation valve locations and descriptions are given in Table 9.4.7-1. Each valve is provided with air cylinder valve operator, control air solenoid valve, and valve position indicating limit switches. Butterfly valves are provided outside the shield wall for annulus secondary containment isolation as needed. The Reactor Building purge fans, filters, and duct work located beyond the isolation valves are not required for post accident (MSLB, LOCA) mitigation; except where their integrity is required to ensure annulus secondary containment and ABSCE boundaries. Possible missiles generated by this system will not damage any ESF equipment.

The RBPV System will isolate in the event radioisotopes are released from the nuclear fuel rod assembly during a fuel handling accident inside containment. The accident analysis addressed in FSAR Section 15.5.6 takes no credit for the cleanup operation of the Containment Purge Exhaust System to mitigate the accident. Rather, the system is assumed to be isolated on a CVI by the purge line radiation monitors and the associated containment isolation valves on high radiation in the exhaust air stream. No fuel handling or movement inside primary containment will be allowed unless the purge line radiation monitors and the purge line containment isolation valves are operable or containment purge is isolated. The containment purge system will also be isolated upon the actuation of a CVI signal whenever the primary containment is being purged during normal operation. This radiation monitor is discussed in Chapter 11.

The air cleanup equipment installed in the exhaust side of the system was designed in accordance with accepted engineered safety feature design practices. As a result, good general agreement with Regulatory Guide 1.140 standards for air cleanup equipment is achieved.

The system butterfly valves and exhaust fans were purchased to Seismic Category I requirements. System supply fans were not purchased to Seismic Category I requirements. Filter train cleanup units consist of prefilters, HEPA filters, charcoal absorbers, and are qualified to Seismic Category I requirements. All of the above equipment, except for supply fans, was purchased in compliance with Quality Assurance Procedures.

All supply and exhaust penetration isolation valves, annulus duct, exhaust system duct, fans, and filter trains are supported to Seismic Category I requirements, and all supply system duct (excluding annulus duct), fans, and filter trains are supported to Seismic Category I(L) requirements. All ducts connecting to the Shield Building exhaust vent extending to the outside are designed and constructed to withstand the tornado pressure decrease of 3 lb/in^2 in three seconds.

An analysis was performed to determine the offsite radiological consequences of a LOCA during a containment purge operation and before completion of containment isolation. Additional details are provided in Section 6.2. The dose is considered as the summation of (a) the dose resulting from direct release to the environment during containment purge and before complete containment isolation and (b) the dose resulting from the release of radioactivity by various pathways after containment isolation. The results of this analysis is presented in Table 15.5.3-4. As indicated in this table the dose due to the accident does not exceed those guidelines specified in Regulatory Guide 1.4.

9.4.7.4 Inspection and Testing Requirements

The Reactor Building purge ventilation system is accessible for periodic inspections and tested initially and periodically. HEPA filter cells are subjected to periodic tests with DOP in accordance with approved plant procedures. Carbon adsorbers are subjected to periodic tests with freon in accordance with approved plant procedures. Purge system containment penetration isolation valves are in service tested per ASME Section XI and leak tested per 10 CFR 50, Appendix J.

9.4.8 Containment Air Cooling System

9.4.8.1 Design Bases

The Containment Air Cooling Systems are designed to maintain an acceptable temperature within the Reactor Building upper and lower compartments, reactor well, control rod drive mechanism (CRDM) shroud, and instrument room for the protection of equipment and controls during normal reactor operation and normal shutdown. The instrument room is mechanically cooled to permit personnel access during normal reactor operation.

The Lower Compartment Air Cooling System, together with operation of the CRDM Air Cooling System, is designed to supply air at a maximum temperature of 90°F to maintain an average air temperature less than 125°F in various lower compartment spaces during normal reactor operation. Four 33.34 percent capacity fan-coil assemblies are available. When river temperatures are high, four assemblies may be needed to maintain acceptable average air temperature in the lower containment. Operating history data indicate slightly greater than 120°F average temperatures have occurred less than 1% of the time.

During normal reactor operation, the CRDM Air Cooling System is designed to operate in conjunction with the Lower Compartment Air Cooling System to maintain the CRDM internals within their design temperatures (see Section 4.2.3.2.2).

The CRDM Air Cooling System consists of four 50 percent capacity fan-coil assemblies combined into two 50 percent capacity subsystems. Of these four fan-coil assemblies, one for each subsystem is normally operated for a total of two, and one for each system normally remains on standby for a total of two. Air drawn through the CRDM shroud is cooled by the active fan-coil assemblies and discharged into the lower compartment.

Upon the requirement for additional cooling in the lower compartment, an arrangement of dampers will allow either or both standby CRDM fan-coil assemblies to recirculate, and cool an additional portion of the lower compartment air.

The Upper Compartment Air Cooling System is designed to recirculate the upper compartment air and to maintain the average upper compartment temperature between 85°F and 105°F during normal reactor operation. This temperature range is consistent with the containment analysis input assumptions for the bulk air mass. Four fan-coil assemblies are installed on Unit 2 and two fan-coil assemblies are installed on Unit 1.

The Reactor Building instrument room is cooled during normal reactor operation or shutdown by either of two 100 percent capacity air-conditioning systems. Each system consists of a fan-coil unit located within the instrument room, a water-chilling condensing unit and chilled water pump located in the Auxiliary Building, and the connecting chilled water piping including containment penetration valves.

The heat sink for each lower compartment, upper compartment, and CRDM air cooling fan-coil assemblies, and for each Instrument Room Air Cooling System condensing unit is the ERCW System.

The lower compartments and CRDM air cooling fan-coil assemblies are energized from the Emergency Power System. Two of the four lower compartment coolers are required to operate for non-LOCA post-HELBs inside containment when the RCS is maintained at hot standby conditions.

9.4.8.2 System Description

The Containment Air Cooling Systems are shown in Figure 9.4.7-1. It consists of four subsystems as follows:

1. Lower compartment air cooling.
2. CRDM air cooling.
3. Upper compartment air cooling.
4. Reactor Building instrument room air cooling.

9.4.8.2.1 Lower Compartment Air Cooling System

The four safety related lower compartment air cooling fan-coil assemblies are located in two annular concrete chambers around the periphery of the lower compartment at floor elevation 693. Each fan-coil assembly consists of plenum, eight air cooling coils, vane-axial fan, instruments, and controls. Each fan-coil assembly is designed to cool approximately 65,000 cfm of 120°F air to 90°F or lower when supplied with 200 gal/min of 84.5°F water from the plant ERCW System. A cooling water throttling valve for each assembly can be automatically controlled by a temperature controller. Manual control is also available. The ERCW System is described in Section 9.2.2. Coolers are designed to utilize 87°F ERCW water for design basis accident (main steam line break).

Lower compartment air passes directly to each active fan-coil assembly where it is cooled and supplied through a common duct distribution system to the lower compartment spaces. The system is designed for three of the four fan-coil assemblies to operate together, with a total design flow rate of 165,000 cfm during normal operation. During periods of high river temperature, all four fans may be needed to maintain adequate cooling. The cooled air is supplied directly to each steam-generator compartment, pressurizer compartment, regenerative and excess letdown heat exchanger room, main lower compartment space, and to the space below the reactor vessel. In addition, two units are required to supply a minimum flow rate of 100,000 cfm for post-accident recovery periods.

During outages, the Auxiliary Building General Building Ventilation Chilled Water System may be used to temporarily cool the lower containment area by providing the medium to cool the normally supplied cooling water i.e., the Essential Raw Cooling Water (ERCW) to the lower compartment coolers via a temporary heat exchanger.

9.4.8.2.2 Control Rod Drive Mechanisms Air Cooling System

The four control rod drive mechanisms air cooling fan-coil assemblies are located in the main lower compartment space at floor elevation 679.78. Each assembly consists of plenum, two air cooling coils, vane-axial fan, assembly isolating air-operated damper, instruments, and controls. Each fan-coil assembly is designed to cool approximately 31,250 cfm air to 120°F or lower when supplied with 84 gal/min of 84.5°F water from the plant ERCW System. Normally, a cooling water throttling valve for each assembly is automatically controlled by a temperature indicating controller which utilizes an input from a thermocouple in the cooler. The ERCW System is described in Section 9.2.2. Cooling water flow can also be controlled manually with operator temperature monitoring.

The four CRDM air cooling fan-coil assemblies are divided into two pairs with either one of each pair, for a total of two, designed to operate together to exhaust a total of approximately 62,500 cfm of air from the CRDM shroud during normal reactor operation. The air is cooled by the fan-coil assemblies and is discharged to the lower compartment spaces. An estimated 3,080,000 Btu/hr of cooling capacity is provided.

9.4.8.2.3 Upper Compartment Air Cooling System

A portion of the upper compartment air is recirculated and cooled as needed by four upper compartment fan-coil assemblies (Unit 2) and two upper compartment fan-coil assemblies (Unit 1). One fan coil assembly operates as needed with one (or more for Unit 2) on standby during normal reactor operation. The fan-coil assemblies are located within the upper compartment on top of the steam generator enclosures at elevation 778.69. Each fan-coil assembly consists of plenum, three air cooling coils, vane-axial fan, instruments, and controls. Each fan-coil assembly is designed to cool 16,000 cfm of 110°F air to 98°F or lower when supplied with more than 20 gal/min of 84.5°F water from the plant ERCW System. Roughly 190,000 BTU/hr cooling capacity is provided by each fan-coil assembly. A cooling water throttling valve for each assembly is either automatically controlled by a temperature indicating controller which utilizes an input from the thermocouple mounted in the return air supply to control the containment air temperature or operated in manual and adjusted as necessary. Upper containment air temperatures during normal operations are maintained within the limits specified in the Technical Specifications. The ERCW System is described in Section 9.2.2.

9.4.8.2.4 Reactor Building Instrument Room Air Cooling System

The non safety related Instrument Room Air Cooling System consists of two 100-percent capacity air-conditioning systems. Each system consists of a semi-hermetic packaged water chilling unit and chilled water pump located in the Auxiliary Building penetration room at elevation 669, a fan-coil unit with air supply duct located in the Reactor Building instrument room, connecting chilled water piping with double containment penetration isolation valves (see Section 6.2.4), and all necessary and customary control and indicating devices.

Each water chilling unit is rated at 10.4 tons of refrigeration. The fan-coil unit is designed to recirculate not less than 6200 cfm of air.

9.4.8.2.5 Controls and Instrumentation

Operation of each fan-coil unit (lower compartment, upper compartment, CRDM, and instrument room) is indicated in the main control room. Air flow switches are mounted in the fan-coil unit discharge and/or suction to provide annunciation in the main control room upon loss of air flow and with exception of the CRDM Air Cooling System, start the redundant fan coil unit, when

operated in the automatic mode. The CRDM Air Cooling System Units are manually started. Thermocouples measuring air temperatures for lower and upper compartments, CRDM Air Cooling System, and Instrument Room can be monitored to evaluate system performances.

9.4.8.3 Safety Evaluation

The Lower Compartment Coolers of the Containment Air Cooling System are ESF and provide the safety function of maintaining the air below a specified temperature following a High Energy Line Break (HELB), except for a LOCA. The temperature in lower containment will be maintained under the Environmental Qualification temperature profiles. These coolers are supplied cooling water by separate trains of ERCW water. The Lower Compartment Air Cooling System is designed in accordance with ANS Safety Class 2B.

The Upper Compartment Coolers of the Containment Air Cooling System are not ESF but are necessary to establish and maintain the upper compartment air bulk temperature within the design temperature range prior to an accident. Technical Specification 3.6.5 establishes an average upper compartment temperature of 85°F to 105°F during normal reactor operation. This temperature range is consistent with the containment analysis input assumptions for the upper compartment's bulk air mass.

The remaining Containment Air Cooling Systems are not required for maintenance of plant safety in the event of an accident and are not part of the engineered safety systems. However, the reactor containment penetration isolation valves for the Instrument Room Air-Conditioned Chilled Water System and the ERCW supply to the upper and lower compartment coolers have a Nuclear Safety Class designation in accordance with ANS Safety Class 2A.

The capability of assuring containment ambient temperature levels are discussed in Section 3.11.

To prevent damage to adjacent safety-related equipment necessary for the plant safe shutdown in case of a nuclear accident, all air cooling assemblies, instrument room fan-coil units, water-cooled condenser portion of the instrument room water chillers, ductwork and duct supports, and chilled water piping and pipe supports are designed and installed to seismic requirements.

9.4.8.4 Test and Inspection Requirements

Air cooling assemblies and their temperature controlling devices, located within containment, are initially tested before reactor operation and are generally accessible for inspection only during unit shutdown. Instrument room fan-coil units, control devices, and containment isolation chilled water valves are accessible for periodic inspection. Water chilling equipment, pumps, and all essential electrical starting and switchover controls located in the Auxiliary Building are accessible for periodic inspection.

Instrument room chilled water containment isolation in-service testing and inspection requirements are in accordance with ASME Section XI and 10 CFR 50 Appendix J.

9.4.9 Condensate Demineralizer Waste Evaporator Building Environmental Control System

The building is not used and the supply and exhaust connections to the Auxiliary Building are isolated. CDWE building and equipment are excluded from the design basis of the plant. Therefore, environmental control for CDWE building is not required.

9.4.10 Postaccident Sampling Ventilation System

9.4.10.1 Design Basis

The postaccident sampling facility environmental control system (PASFECS) provides heating, cooling, and ventilation during normal plant operations and training activities. In addition, heating, ventilation, and control of airborne radiological contamination is provided during postaccident acquisition and testing of samples. This is accomplished through pressurization of the areas by the ventilation system which induces air from areas of lesser to areas of greater contamination potential. The system maintains temperatures within a range of 50°F to 104°F. The PASFECS has redundant isolation capability in all ductwork which interfaces with the Auxiliary Building Gas Treatment System (ABGTS) or penetrates the Auxiliary Building Secondary Containment Enclosure (ABSCE).

9.4.10.2 System Description

The PASFECS is shown on Figures: 9.4.10-1. The PASFECS consists of a ventilation subsystem (PASFVS), a heating and cooling subsystem (PASFHCS), and a radiological gas treatment subsystem (PASFGTS).

9.4.10.2.1 PASFVS

During normal plant operation, ventilation air is supplied to the facility via the Unit 2 Auxiliary Building general ventilation system and an auxiliary supply fan. Exhaust air is ducted directly to the fuel handling area exhaust fans.

During postaccident sampling operations, the normal supply and exhaust systems are isolated and ventilation air is taken directly from the outside at a point on the roof of the unit 1 additional equipment building. Both the unit 1 and unit 2 systems share this common intake. A supply fan provides air to the sampling side of the facility in response to a differential pressure controller. Air is drawn from both the sample and valve gallery areas and through a gas treatment system by an exhaust fan and routed to the exhaust duct downstream of the ABGTS air cleanup unit. The sampling area is maintained at a positive pressure $\geq$ 0.12 inch WG with respect to atmosphere while the valve gallery is kept at a negative pressure of $\leq$ 0.25 inch WG with respect to the sample side.

9.4.10.2.2 PASFHCS

In the normal mode of operation, supply air taken from the unit 2 Auxiliary Building general ventilation system has already been tempered and no additional heating or cooling is required.

In the postaccident mode, incoming air is preheated in response to a duct mounted temperature switch. No cooling is provided in this mode. However, the ventilation system will maintain the facility below 104°F with 97°F outside conditions.

9.4.10.2.3 PASFGTS

The radiological gas treatment subsystem consists of one HEPA/charcoal-type air cleanup unit located just upstream of the exhaust fan. Air supplied to the facility during postaccident sampling operations is processed through the air cleanup unit prior to being discharged to the atmosphere.

9.4.10.3 Safety Evaluation

The PASFECS is not a nuclear safety related system; however, the isolation valves and duct which interface with the ABGTS and ABSCE are designed to Category 1 standards. These valves are also backed by Class 1E power. All remaining portions of the system are designed to Category 1(L) requirements.

9.4.10.4 Inspection and Testing Requirements

The Post Accident Sampling Facility Ventilation Subsystem will be periodically inspected and tested.

Air cleanup units are designed and tested per the requirements of NRC Regulatory Guide 1.140. The charcoal filters are tested in accordance with ASTM D-3803-1989. Preoperational tests provided data for the initial balance of the system and verification of design flow rates.

9.4.11 References

1. Letter from R. C. Lewis, NRC Director Division of Resident and Reactor Project Inspector to H. G. Parris, TVA Manager of Power, dated January 18, 1982: RIMS # A02 820121 009.

TABLE 9.4.1-1 (Sheet 1)

REGULATORY GUIDE 1.52 (Rev. 2) SECTION APPLICABILITY
FOR THE MAIN CONTROL ROOM AIR CLEANUP SUBSYSTEM

Reg. Guide Section	Applicability To This System	Comment Index	Reg. Guide Section	Applicability To This System	Comment Index
C.1.a	yes	Note 1	C.3.i	yes	--
C.1.b	yes	--	C.3.j	yes	--
C.1.c	yes	--	C.3.k	no	Note 10
C.1.d	yes	--	C.3.l	yes	--
C.1.e	yes	--	C.3.m	yes	--
C.2.a	no	Notes 2, 3	C.3.n	no	Notes 2,7
			C.3.o	yes	--
C.2.b	no	Note 2	C.3.p	no	Note 14
			C.4.a	yes	
C.2.c	yes	--	C.4.b	no	Note 2
C.2.d	no	Note 4	C.4.c	no	Note 2
C.2.e	yes	--	C.4.d	no	Note 2,12
C.2.f	yes	--	C.4.e	yes	--
C.2.g	no	Notes 2,5	C.5.a	yes	--
C.2.h	yes	--	C.5.b	no	Notes 2,11
C.2.i	yes		C.5.c	yes	--
C.2.j	no	Notes 2,6	C.5.d	yes	Note 13
C.2.k	yes	--	C.6.a	no	Note 15
C.2.l	no	Notes 2,7	C.6.b	yes	--
C.3.a	no	Notes 2,8			
C.3.b	no	Notes 2,8,9			
C.3.c	yes	--			
C.3.d	yes	--			
C.3.e	yes	--			
C.3.f	yes	--			
C.3.g	yes	--			
C.3.h	yes	--			

NOTES:

1. The postulated DBA for the main control room air cleanup units is the DBA LOCA.

2. Compliance with this section is not required because this system was fabricated well before the publication of the Regulatory Guide.

3. Each redundant air cleanup subsystem contains a HEPA filter bank and a carbon adsorber bank.

4. No pressure surges of any significance to this system are envisioned during the postulated DBA identified in note 1.

5. Air flow sensors utilized to sense low flow through the operating air cleanup unit and switch to the backup unit annunciate the low flow indication in the main control room. Differential pressure sensors for the HEPA and adsorber banks are located on the air cleanup unit

TABLE 9.4.1-1 (Sheet 2)

REGULATORY GUIDE 1.52 (Rev. 2) SECTION APPLICABILITY
FOR THE MAIN CONTROL ROOM AIR CLEANUP SUBSYSTEM

housings in the mechanical equipment room located next to the main control room. This mechanical equipment room is readily accessible to main control room personnel.

6. The amount of radioactive material collected by the filter and adsorber banks in the DBA LOCA will not be sufficient to create a serious radiation hazard. Furthermore, adequate capacity for air cleanup is provided to protect the control room personnel for the full 30-day duration of the postulated emergency. Therefore, there will be no need for a filter or adsorber bank replacement during the emergency.

7. No enhancement in safety is foreseen by utilizing low leakage ducting in this system. Leakage from commercial grade ducting within the main control room cannot jeopardize safety because all supply and exhaust air will be clean. No safety hazard due to small duct leakage outside the enclosed space containing the main control room is envisioned either because in emergencies essentially all air in-leakage into ducting with air below atmospheric will be cleaned up in its passage through the air cleanup unit and all external ducting having air at a positive pressure will not entrain contaminants that will be subsequently introduced into the main control room (the leakage from ducting having a positive air pressure will be from the duct to the outside).

8. No equipment of this kind is utilized in the system.

9. The small quantities of outside air brought inside will not contain sufficient moisture to cause the mixture of recirculated air and outside air to have a humidity level sufficiently high to degrade the adsorber bank performance.

10. The amount of radioactive material collected during the entire 30 day emergency due to the postulated DBA is too small to raise the adsorber bank temperature near the carbon ignition temperature.

11. Compliance with this section is not a licensing requirement.

12. This system does not contain heaters and the technical specifications require periodic operation.

13. The requirements of section C.5.d are met except that ANSI N510-1975 sections 8 and 9 are not performed as prerequisites to section 12. See notes 2 and 11.

14. Dampers do not meet the requirements of ANSI N509-1976. However, butterfly valves which do meet ANSI N509-1976 are installed as required to assure tight shut off and system integrity. See Note 7.

15. Compliance with this section is not required since charcoal filter testing is performed in accordance with ASTM D3803-1989, “Standard Test Method for Nuclear-Grade Activated Carbon,” in order to provide assurance for complying with the current licensing basis, per NRC Generic letter 99-02, “Laboratory Testing of Nuclear-Grade Activated Charcoal.”

TABLE 9.4.7-1

PURGE AND VENTILATION CONTAINMENT ISOLATION VALVES

Primary Containment Penetration	Description	Nominal Size (Inches)	Elevation (Feet)	Azimuth (Degrees)
X-4	Purge Exhaust	24	712	38
X-5	Inst. Room Exhaust	12	716	116
X-6	Purge Exhaust	24	726	293
X-7	Purge Exhaust	24	728	252
X-9A	Purge Supply	24	776	289
X-9B	Purge Supply	24	776	261
X-10A	Purge Supply	24	714	301
X-10B	Purge Supply	24	714	236
X-11	Inst. Room Supply	12	705	57
X-80	Pressure Relief	8	697	286

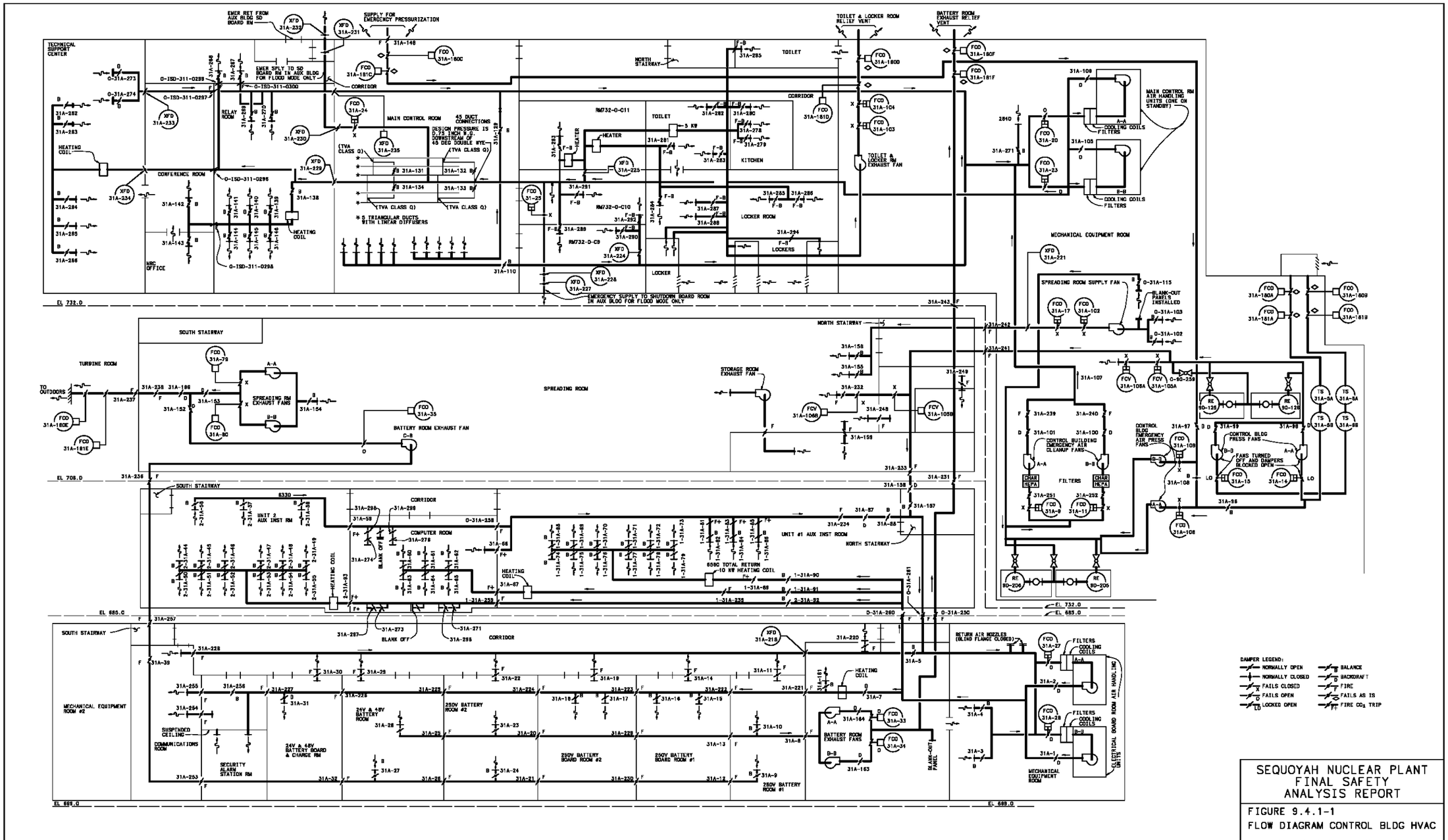

SEQUOYAH NUCLEAR PLANT
FINAL SAFETY
ANALYSIS REPORT

FIGURE 9.4.1-1
FLOW DIAGRAM CONTROL BLDG HVAC

(REVISED BY AMENDMENT 25)

CAD MAINTAINED DRAWING

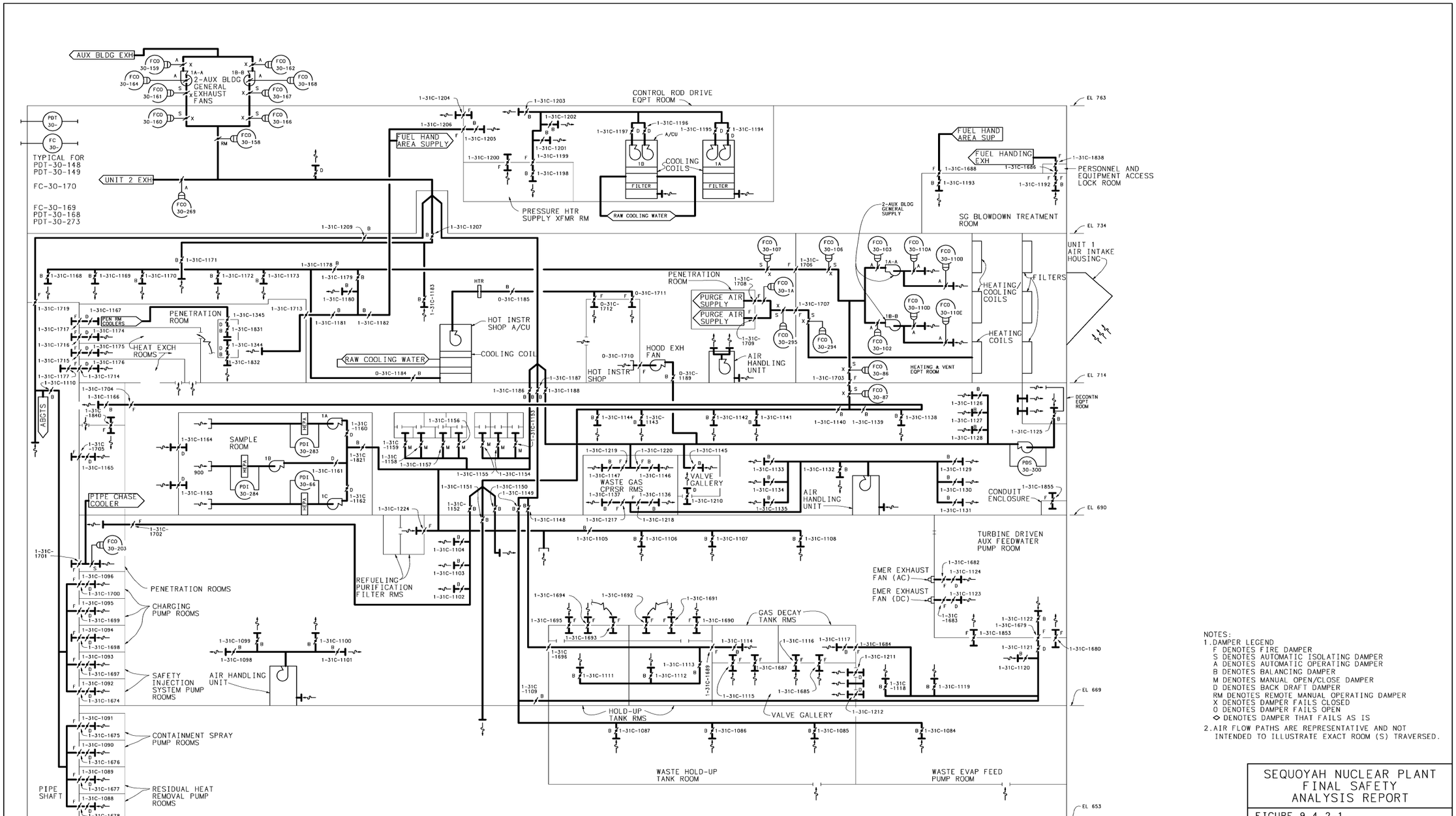

UNIT ONE GENERAL VENTILATION

NOTES:

1. DAMPER LEGEND
   - F DENOTES FIRE DAMPER
   - S DENOTES AUTOMATIC ISOLATING DAMPER
   - A DENOTES AUTOMATIC OPERATING DAMPER
   - B DENOTES BALANCING DAMPER
   - M DENOTES MANUAL OPEN/CLOSE DAMPER
   - D DENOTES BACK DRAFT DAMPER
   - RM DENOTES REMOTE MANUAL OPERATING DAMPER
   - X DENOTES DAMPER FAILS CLOSED
   - O DENOTES DAMPER FAILS OPEN
   - ◇ DENOTES DAMPER THAT FAILS AS IS
2. AIR FLOW PATHS ARE REPRESENTATIVE AND NOT INTENDED TO ILLUSTRATE EXACT ROOM (S) TRAVERSED.

SEQUOYAH NUCLEAR PLANT
FINAL SAFETY
ANALYSIS REPORT

FIGURE 9.4.2-1

FLOW DIAGRAM
AUXILIARY BUILDING HVAC
(REVISED BY AMENDMENT 13)

DRAWING SERVICES UNIT
PROCAD MAINTAINED DRAWING
THIS CONFIGURATION CONTROL DRAWING IS MAINTAINED BY THE SQN CAD UNIT AND IS PART OF THE TVA PROCADAM DATABASE.
COMPUTER GRAPHICS

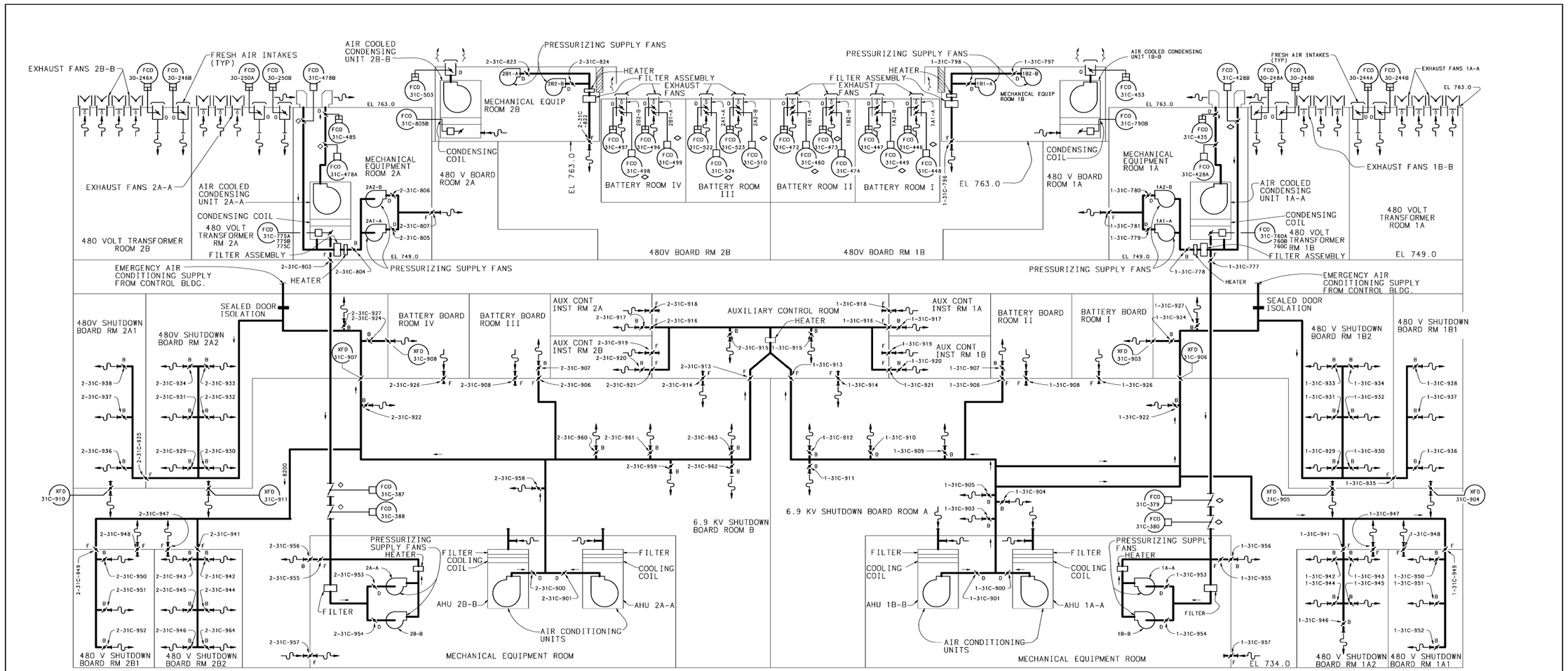

AIR FLOW DIAGRAM
AUXILIARY BOARD ROOMS EL 749.0
SHUTDOWN BOARD ROOMS EL 734.0

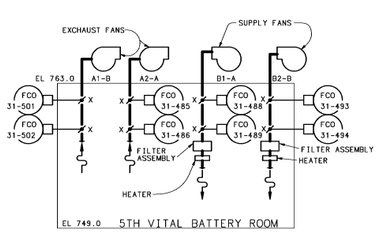

NOTES:
1. REFER TO FIGURE 9.4.2-1 FOR GENERAL NOTES

SEQUOYAH NUCLEAR PLANT
FINAL SAFETY
ANALYSIS REPORT

FIGURE 9.4.2-2

FLOW DIAGRAM
AUXILIARY BLDG HVAC
(REVISED BY AMENDMENT 13)

DRAWING SERVICES UNIT
PROCAD MAINTAINED DRAWING
THIS CONFIGURATION CONTROL DRAWING IS MAINTAINED BY THE SQN CAD UNIT AND IS PART OF THE TVA PROCADAM DATABASE.
COMPUTER GRAPHICS

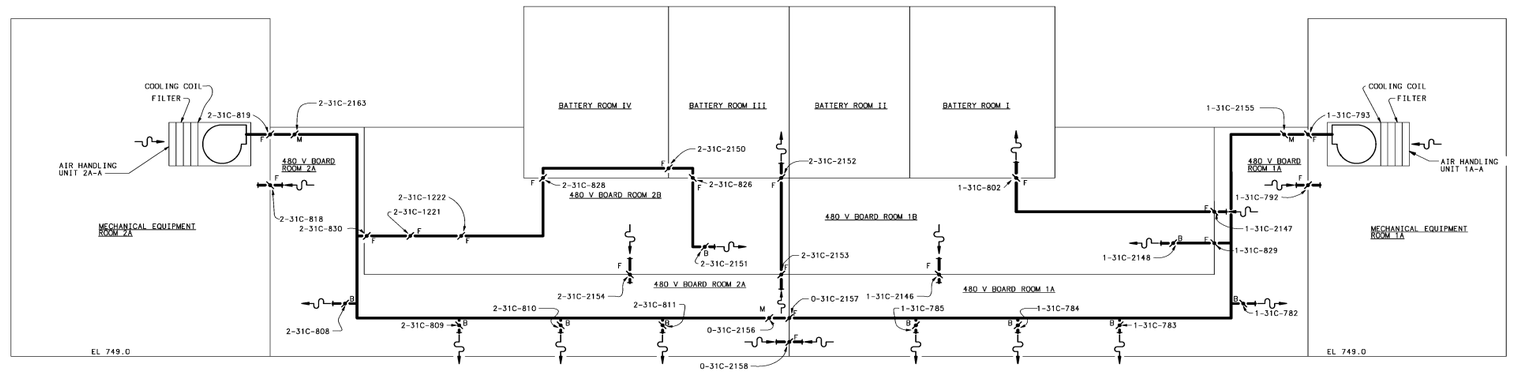

AIR FLOW DIAGRAM
AUXILIARY BOARD ROOMS EL. 749.0
("A" TRAIN)

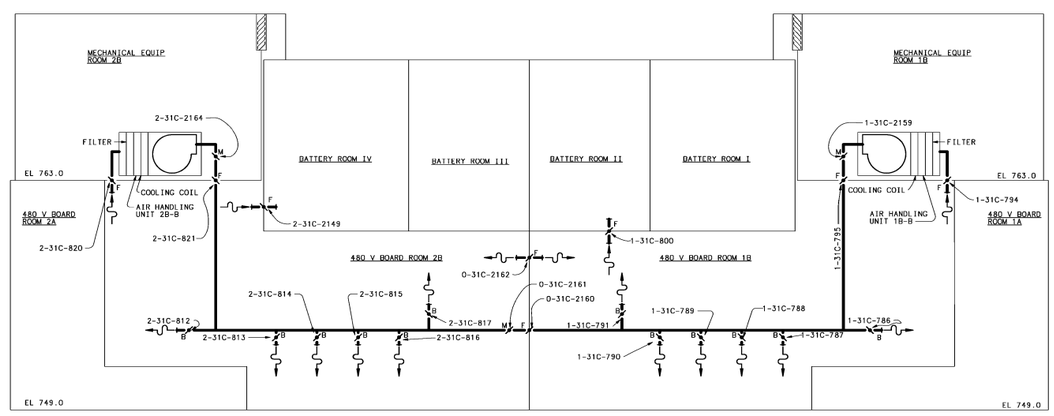

AIR FLOW DIAGRAM
AUXILIARY BOARD ROOMS &
MECHANICAL EQUIPMENT ROOMS
EL. 749.0 & EL. 763.0
("B" TRAIN)

NOTES:
1. REFER TO FIGURE 9.4.2-1 FOR GENERAL NOTES.

SEQUOYAH NUCLEAR PLANT
FINAL SAFETY
ANALYSIS REPORT

FIGURE 9.4.2-2a

FLOW DIAGRAM
AUXILIARY BLDG HVAC
(REVISED BY AMENDMENT 13)

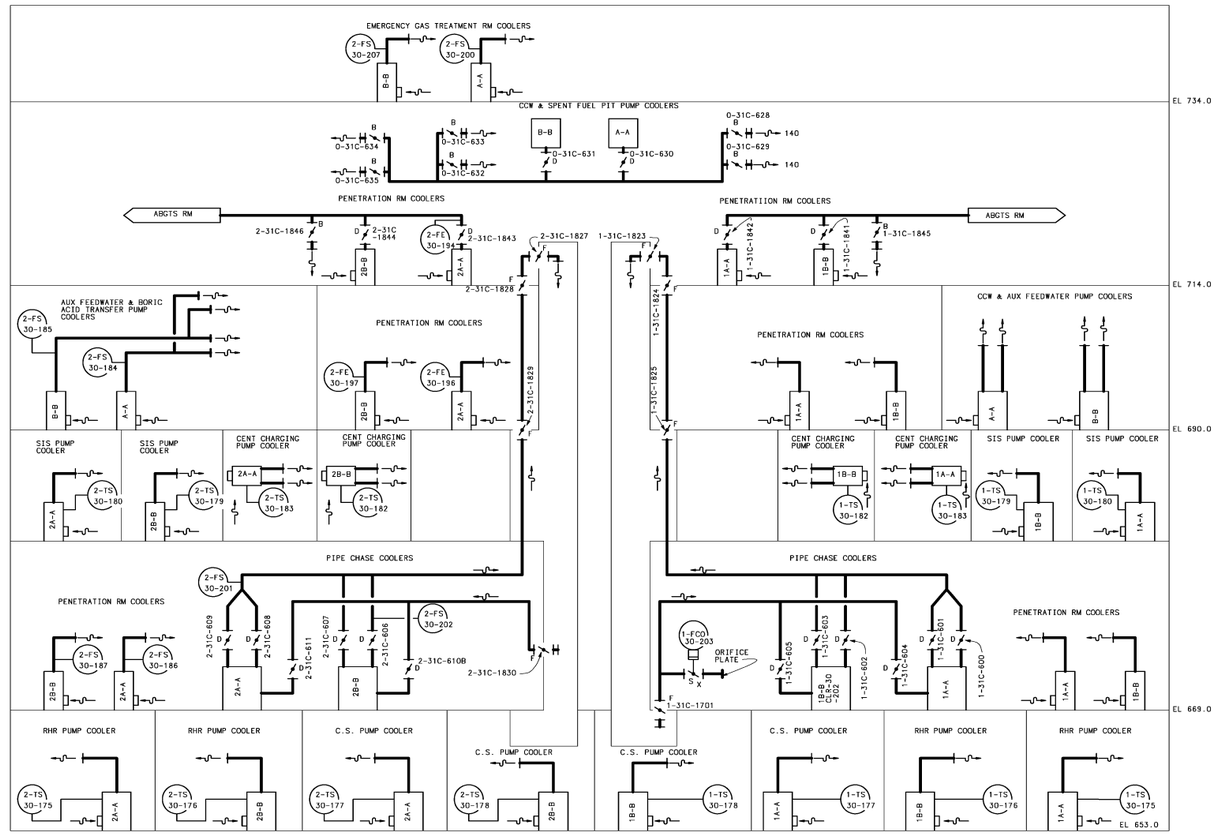

AUXILIARY BLDG

DAMPER LEGEND:

- FCO 30-203 — S - AUTOMATIC OPERATING FOR ISOLATION.
- B — BALANCING (MANUAL).
- D — BACK DRAFT DAMPER.
- GRILLE
- F — FIRE DAMPER

NOTES:

1. REFER TO FIGURE 9.4.2-1 FOR GENERAL NOTES.

SEQUOYAH NUCLEAR PLANT
FINAL SAFETY
ANALYSIS REPORT

FIGURE 9.4.2-3

FLOW DIAGRAM
AUXILIARY BLDG HVAC
(REVISED BY AMENDMENT 17)

CAD MAINTAINED DRAWING

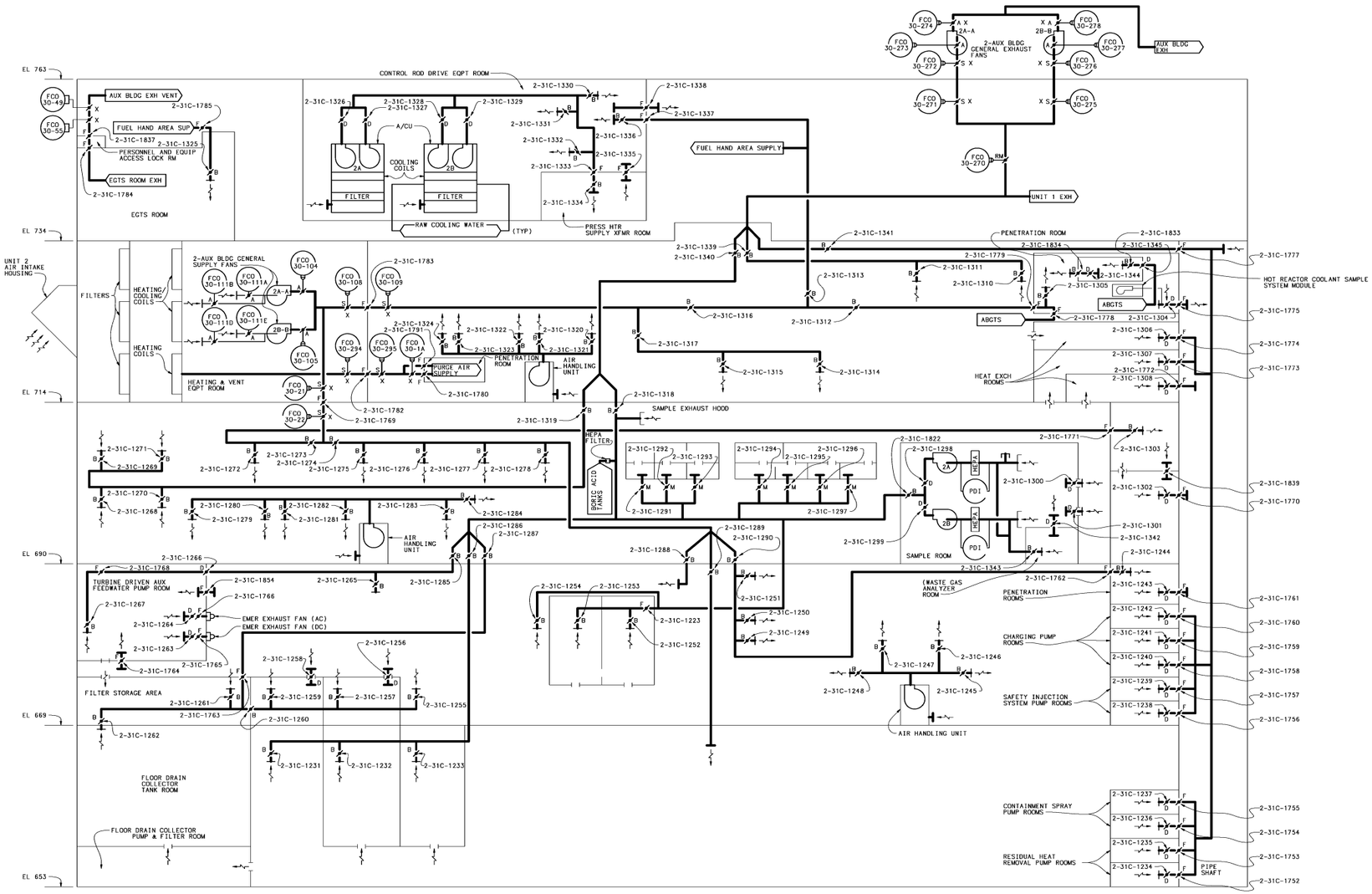

UNIT TWO GENERAL VENTILATION

NOTE:
1. REFER TO FIGURE 9.4.2-1 FOR GENERAL NOTES.

SEQUOYAH NUCLEAR PLANT
FINAL SAFETY
ANALYSIS REPORT

FIGURE 9.4.2-4

FLOW DIAGRAM
AUXILIARY BLDG HVAC
(REVISED BY AMENDMENT 16)

CAD MAINTAINED DRAWING

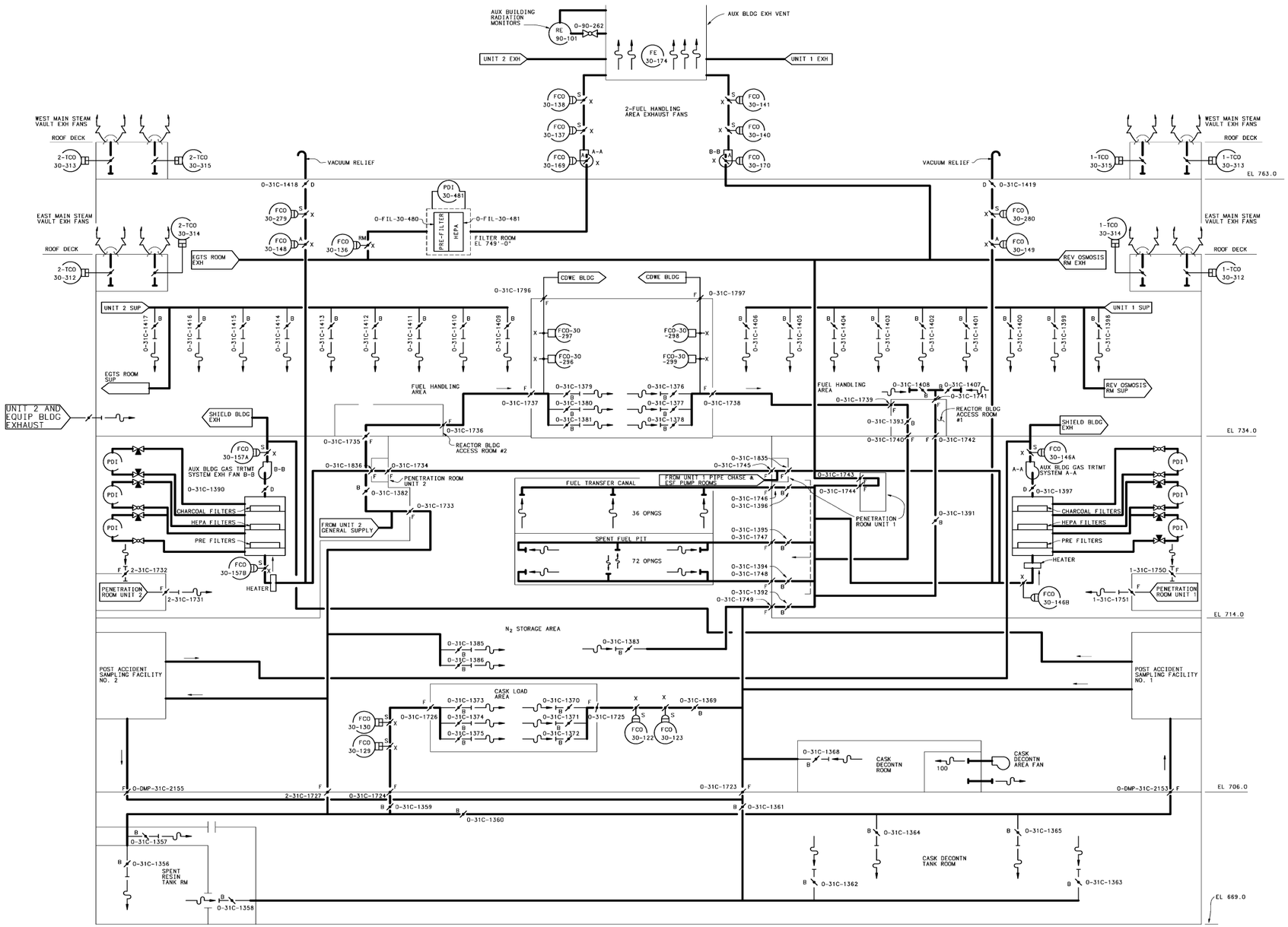

FUEL HANDLING AREA GENERAL VENTILATION

NOTES:
(1). REFER TO FIGURE 9.4.2-1 FOR GENERAL NOTES.

SEQUOYAH NUCLEAR PLANT
FINAL SAFETY
ANALYSIS REPORT

FIGURE 9.4.2-5

FLOW DIAGRAM
AUXILIARY BLDG HVAC
(REVISED BY AMENDMENT 16)

CAD MAINTAINED DRAWING

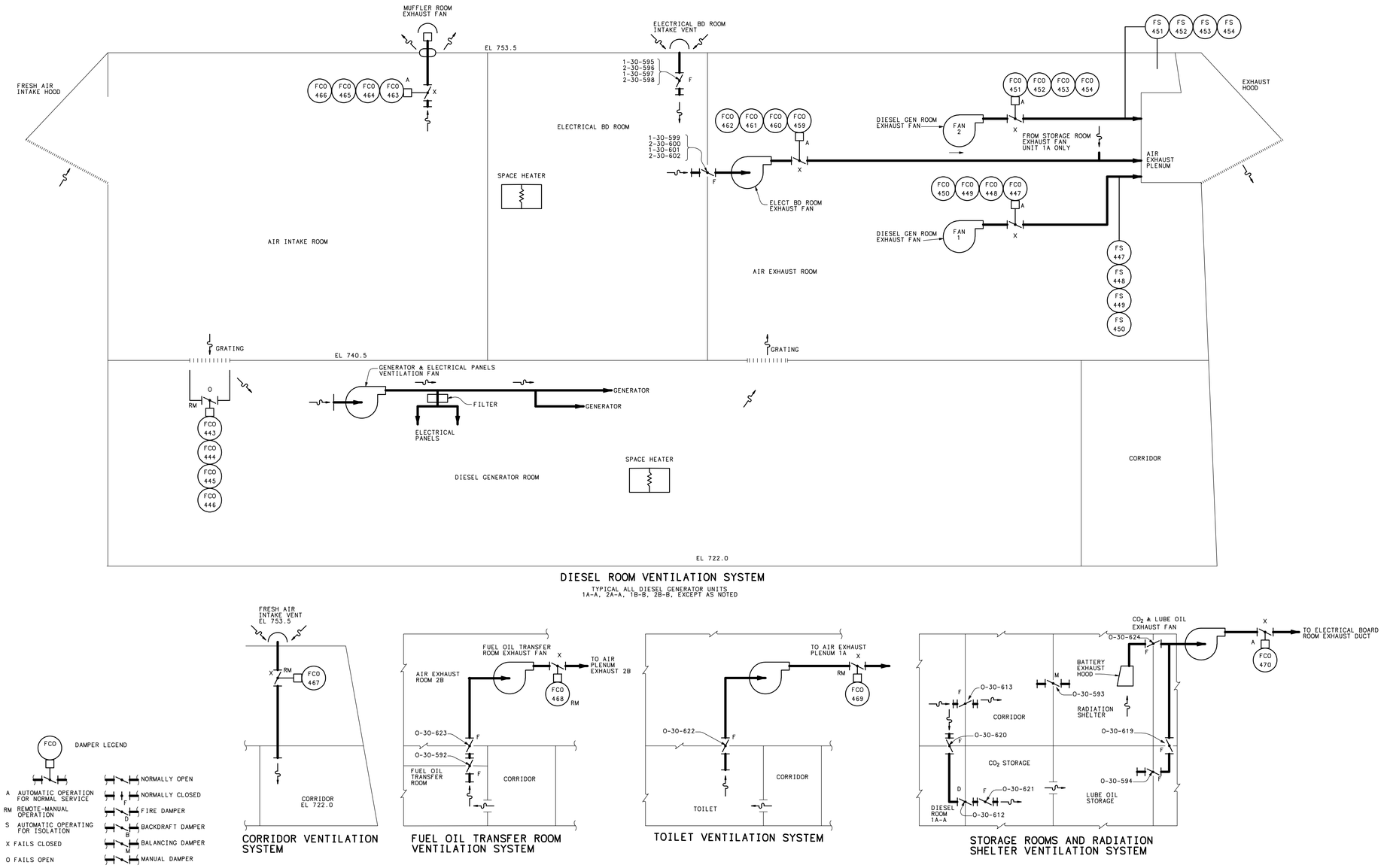

DIESEL ROOM VENTILATION SYSTEM

TYPICAL ALL DIESEL GENERATOR UNITS 1A-A, 2A-A, 1B-B, 2B-B, EXCEPT AS NOTED

CORRIDOR VENTILATION SYSTEM

FUEL OIL TRANSFER ROOM VENTILATION SYSTEM

TOILET VENTILATION SYSTEM

STORAGE ROOMS AND RADIATION SHELTER VENTILATION SYSTEM

SEQUOYAH NUCLEAR PLANT
FINAL SAFETY
ANALYSIS REPORT

FIGURE 9.4.5-1

FLOW DIAGRAM-DIESEL GENERATOR BUILDING AIR FLOW
(REVISED BY AMENDMENT 30)

CAD MAINTAINED DRAWING

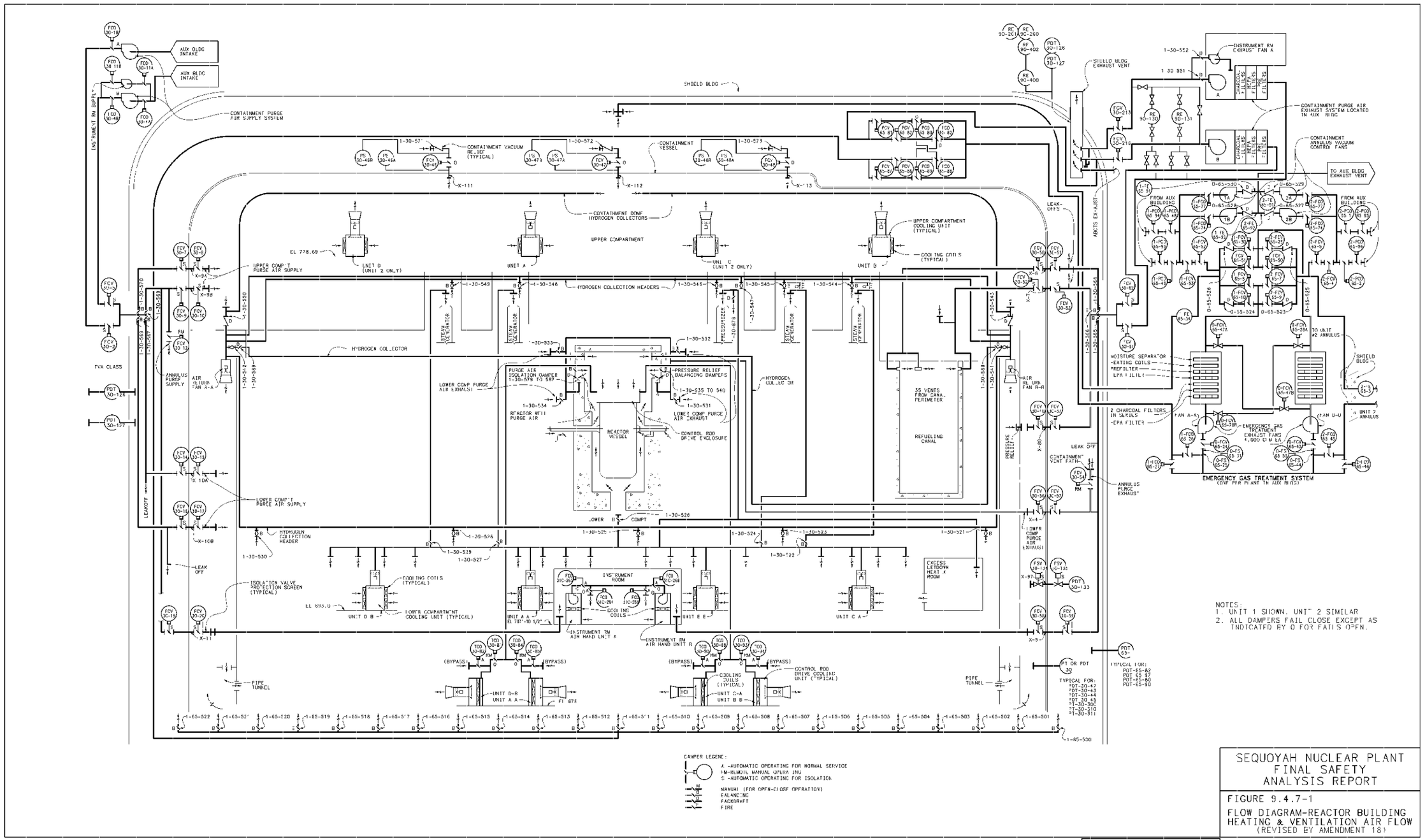

NOTES:
1. UNIT 1 SHOWN. UNIT 2 SIMILAR
2. ALL DAMPERS FAIL CLOSE EXCEPT AS INDICATED BY O FOR FAILS OPEN.

SEQUOYAH NUCLEAR PLANT
FINAL SAFETY ANALYSIS REPORT

FIGURE 9.4.7-1

FLOW DIAGRAM-REACTOR BUILDING HEATING & VENTILATION AIR FLOW
(REVISED BY AMENDMENT 18)

CAD MAINTAINED DRAWING

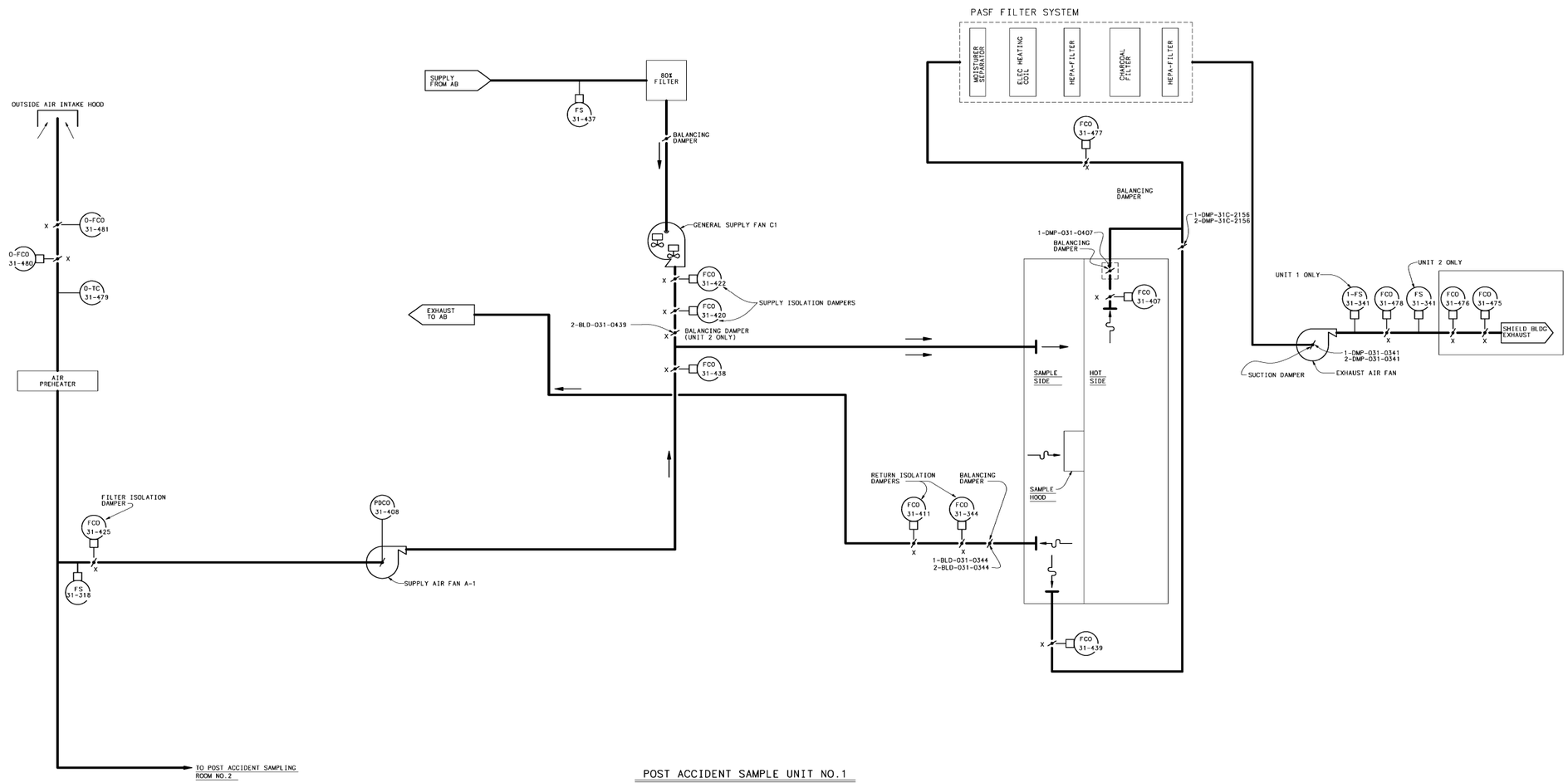

POST ACCIDENT SAMPLE UNIT NO.1

SAMPLE UNIT NO. 2 SIMILAR

X INDICATES DAMPER FAILS CLOSED

SEQUOYAH NUCLEAR PLANT
FINAL SAFETY
ANALYSIS REPORT

FIGURE 9.4.10-1

FLOW DIAGRAM
HVAC

(REVISED BY AMENDMENT 13)

9.5 OTHER AUXILIARY SYSTEMS

9.5.1 Fire Protection System

9.5.1.1 Design Basis

The Fire Protection System and fire protection features are described in the Fire Protection Report (FPR). The FPR is a separate document that is revised and updated periodically similar to this FSAR (e.g., 10 CFR 50.59 process). The FPR should be referred to for a detail description of the Fire Protection Program.

9.5.2 Plant Communications System

9.5.2.1 Design Bases

The design basis for interplant and/or offsite communications is to provide dependable systems to ensure reliable service during normal plant operation and emergency conditions.

The primary interplant communications systems are fiber optics, commercial telephone service, emergency notification system, health physics network, and radios.

The design basis for the intraplant communications is to provide sufficient equipment of various types such that the plant has adequate communications to start up, continue safe operation, or safely shutdown.

The primary intraplant communications systems are the EPBX telephone equipment, sound powered telephones, closed circuit television, evacuation alarm, loud speaker paging, general fire or medical emergency alarm, radios, and Wi-Fi System (with VoIP Telephones).

9.5.2.2 General Description

9.5.2.2.1 Intraplant Communications

The following paragraphs describe the basic functions of the intraplant communications systems.

Telephone System

Electronic Private Branch Exchange (EPBX) - A EPBX is installed to provide primary 2-way communications throughout the Sequoyah Nuclear Plant as well as access to offsite circuits. The EPBX is equipped with a minimum of the following provisions:

1. 2-Way telephone conversation
2. Fire and Medical Emergency Alarm
3. Loud Speaker Paging
4. Executive override
5. Single digit access to the EPBX telephone switchboard (dial 0)
6. Dial access to offsite locations
7. Automatic Alternate Routing
8. Direct inward dial from local central office
9. Direct outward dial to local central office

10. 2-Way trunks to Chattanooga
11. 2-Way trunks to Chattanooga Central Emergency Control Center

The EPBX is powered from a 48V DC source. This source consists of a telephone battery charger, a spare battery charger, a regulating power board, and a battery. The telephone battery charger is fed from a non-1E source with an alternate feed from a train A diesel-backed board. The spare battery charger is fed from a train A diesel-backed board with an alternate feed from a train B diesel-backed board. Should both chargers fail, the battery is sized to carry the load.

Sound-Powered Telephone Systems

1. Plant Operation Systems - The primary purpose of these systems is to provide communications for maintenance and operations personnel. The following 6 separate systems are provided for each of the two units, a total of 12 systems for use with portable sound-powered headsets. Signaling capabilities are not provided.

   SP1 - Sound-powered jack system for turbine control, generator, and auxiliary power system

   SP2 - Sound-powered jack system for feedwater, steam and condensate system

   SP3 - Sound-powered jack system for reactor control system

   SP4 - Sound-powered jack system for reactor coolant and auxiliary steam system

   SP5 - Sound-powered jack system for engineered safeguards system and auxiliary system

   SP6 - Sound-powered jack system for refueling system

2. Backup Control Center System - The primary purpose of this sound powered system is to provide communications between the auxiliary control room and other stations which must be manned to shutdown the reactors if the main control room is abandoned. This system consists of two completely redundant subsystems. Each subsystem is wired directly and independently of all other communications systems. Wiring routes avoid the spreading room, unit control rooms, and auxiliary instrument rooms. Sound-powered telephones with signaling capabilities, portable head-chest sets, and jacks are provided in the diesel generator buildings, the 480V ac shutdown board rooms, the 6.9kV ac shutdown board rooms and the auxiliary control room.

3. Health Physics System - The primary purpose of this sound powered telephone system is to provide an alternate communications link between the health physics office and the main control room. A direct circuit is provided between a magneto-equipped telephone in the health physics satellite laboratory and the main control room.

4. Diesel Building to Main Control Room - The primary purpose of this sound powered telephone system is to provide an alternate communications link between the diesel generator building and main control room. A direct circuit is provided between a telephone in the radiation shelter room in the diesel generator building and a telephone in the main control room at the diesel generator control panel. Both telephones have signaling capabilities.

Closed-Circuit Television Reactor Containment and Control Room - Two portable cameras can be provided for remotely viewing refueling operations. Permanent wiring for the cameras is terminated in plug receptacles on the refueling floor and lower compartment of each unit and at the common spent fuel pit area. A monitor and video switcher can be provided in the electrical control room. This system can be used by operations but is also useful in providing training information.

Evacuation Alarm System

Plant-wide siren coverage is provided for signaling assembly and accountability to the plant personnel. These sirens are operated in two modes, undulating and monotone.

There are two completely separate power supplies and control stations provided for the system and also redundant automatic timers. The timers may be manually bypassed in case both fail.

The motor-driven sirens and strobelights operate in groups using separate contactors, each of which have two diesel-backed 120V ac power supplies (except for the ERCW pumping station and the Office and Power Stores building) and two redundant actuating relays.

Paging System

Paging speakers are installed in the auxiliary, reactor, turbine, and control buildings. Paging handsets are provided in both unit control and the auxiliary control room. In addition to the paging handset locations, this equipment may be accessed from any EPBX telephone. The speaker-amplifiers are fed in parallel from an alternating current lighting source.

Fire and Medical Emergency Alarm

This system is used to sound the general fire alarm or medical emergency. The system is activated by way of the EPBX, as well as from the control room.

Inplant Radio System - The primary purpose of this system is to provide voice communications throughout the plant for plant personnel. This system consists of UHF/VHF radios, UHF/VHF signal, and portable radios. All systems use the Distributed Antenna system.

Wi-Fi System - The primary purpose of the Wi-Fi System is to provide wireless internet access in the power block. The Wi-Fi system in conjunction with wireless VoIP telephones will provide redundant communications for performing Appendix R Operator Manual Actions in the event a fire disables the primary Inplant Radio System. The system consists of a main distribution cabinet located in the Spreading Room, with end switch cabinets and access points located throughout the plant power block.

9.5.2.2.2 Interplant Communications

The following paragraphs describe the basic functions of the interplant communication system.

Optical Ground Wire (OPGW) Circuit

The OPGW circuit enters through the plant switchyard. The fiber optic terminal equipment is located in the Node 2 Building. This circuit terminates at remote TVA locations which are staffed continuously. The OPGW circuit is cross-connected to the telephone switch to permit rerouting

in the event of a failure. Access is provided at the electrical operators desk in the main control room. Power is supplied from the 48-volt UPS communications power system in the Node 2 Building.

Telephone System

1. Commercial Telephone Service - Public telephone service is provided to all EPBX telephones with proper class of service, to pay telephones, and to dedicated data circuits.

2. Emergency Telecommunications System - This system consists of communication links that are considered by the NRC to be essential in the event of a serious emergency at a nuclear plant reactor site. Dedicated telephone lines that are independent of the local public telephone switching network provide the required functions which are as follows. The Emergency Notification System (ENS) is used primarily to provide initial notification to the NRC of a problem as well as ongoing information on plant systems, status, and parameters.

   The Health Physics Network (HPN) is used primarily to report to the NRC on radiological and meteorological conditions, as well as assessment of trends and protective measures taken on-site and off-site. Several other links are furnished which are primarily used for internal NRC discussions but may also be used for discussions between the NRC and plant management at the site.

Onsite Paging System - The primary purpose of this system is to provide daily and emergency paging of plant personnel. This system, which is accessible from the EPBX, is controlled from offsite.

Transmission Power Supply (TPS) Radio - The primary purpose of this system is to provide communications for engineers and control room personnel. This system is capable of contacting local mobile units and other TVA power generating facilities.

Nuclear Security Service (NSS) Radio - The primary purpose of this system is to provide effective communications between all onsite NSS officers. This system consists of two VHF channels and portable radios for NSS officers. The NSS officers also have access to the UHF channels.

Radiological Communication Radio (RCR) - The primary purpose of this system is to provide a communications link between health physics personnel and mobile monitoring vehicles. This system consists of two offsite repeaters, various remote control units and portable radios. Onsite remote control units are located in the Technical Support Center, the Radiological Control lab, and the main control room.

Sheriff's Radio - The primary purpose of this system is to provide communications between NSS officers and the Hamilton County sheriff. This system consists of one base station and remote control units.

9.5.2.3 Evaluation

The following evaluation is intended to establish adequacy and redundancy of the plant communications systems design.

The fiber optic circuits enter the plant via different paths and they are redundant to each other. The fiber optic circuit enters the plant via an overhead static wire located in the 161 KV switchyard. The fiber optic and the radio frequency equipment each have an automatic standby mode energized and ready to operate. The power for the fiber optic is fed from a 48 volt battery-battery charger system in the Node 2 communication building. This battery is capable of operating Node 2 communications.

The public telephone lines are routed through the EPBX powered by 48 volt DC (battery backed). However, in the event of EPBX system failure, certain public lines will be available for use.

The Emergency Telecommunications System consists of dedicated telephone lines that are independent of the local public telephone switching network. This prevents failure of the system due to congestion of the local public switching networks during an emergency. Backup power for this system is provided by SQN.

The TPS Radio is located in the hallway outside of the Technical Support Center on elevation 732 of the Control Building. The complete loss of the Communications Room (elevation 669 of the Control Building) would not cause the loss of this link.

The NSS VHF radio is not located either with the TPS VHF radio or in the communications room. It is located in the Auxiliary building. The NSS radio to the local sheriff's office is located in the turbine building. It is not probable that these radios and the TPS radio will be out of service simultaneously.

A fiber optic cable connection from the cell site to a VHF remote interface unit (RIU) on elevation 732' in the turbine building extends the communications capabilities to inplant buildings. The RIU allows the existing UHF/VHF Radio System communications to operate using the inplant Distributed Antenna System. The Wi-Fi VoIP Telephone equipment is located in a separate fire zone and is available as a communication tool during various postulated events for a loss of the UHF/VHF system.

The Wi-Fi system main distribution cabinet is located in the Spreading Room and physically separated from the Inplant Radio System. In the event that a fire disables the primary Inplant Radio system cabinets, the Wi-Fi will be available for emergency communications. Power supplies for Inplant Radio System and the Wi-Fi system are also physically separated; ensuring that no single fire in a given plant fire area can disable the power feed to both the primary Inplant Radio System and the redundant Wi-Fi system simultaneously.

Refer to Table 9.5.2-1 for availability of interplant communications during various postulated conditions.

The EPBX is designed so that individual component failures within the EPBX do not interrupt service. However, such failures are annunciated so that repairs can be made promptly. The switching equipment for this system is located in the communications room which is in a Seismic Class I building and in the telecommunication node 2 building located outside the protected area. These two locations can work independently of each other. The EPBX is designed to provide continuous service in times of emergency.

The paging equipment is dispersed in the control building and powerhouse areas. Single or multiple open circuits or amplifier failure in individual units will not prevent the remaining equipment from functioning. The failure of the equipment will not impair the use of the paging equipment from the local paging stations located in the control room, or the auxiliary control room.

The sound-powered telephone systems are completely independent of power, each other, and all other systems provided. As long as a complete metallic path exists between instruments, communications can be maintained since the instruments supplied with these systems are very rugged and will successfully withstand high shocks, negligence and abuse. If permanently installed wires are rendered unusable for any reason, a temporary pair of wires can be used with the sound-powered instruments.

The design of the evacuation alarm system is such that it will not likely be inoperative for the following reasons:

1. Two independent widely separated operating centers are provided.

2. Duplicate timers located in widely separated bays are furnished with provision for manual override in case both fail. Each timer is powered by a separate alternating current source.

3. Duplicate actuating relays are provided in each remote control unit.

4. Independent contactors are provided, each controlling a group of sirens. Failure of one contactor will not affect the others.

5. Two sources of diesel-backed alternating current power are provided for most control units with provisions for annunciation upon failure of each source.

6. Power failure to the timers and to the remote control unit actuating relays is annunciated.

Refer to Table 9.5.2-1 for availability of intraplant communications during various postulated conditions.

9.5.2.4 Inspection and Tests

Two communications systems were covered by preoperational test (TVA-11):

1. The sound-powered telephone systems provided for the backup control center, health physics office, and diesel building shielded room.

2. The evacuation alarm system.

All systems were also carefully installed and checked for proper operation initially by construction forces. Maintenance is performed on an as needed basis and includes such items as checking for proper switch operation, checking for proper operating levels, visual inspection, etc.

The most comprehensive testing, however, results from the heavy daily usage of the equipment and the subsequent reports by the users. Power failures in the systems are annunciated.

9.5.3 Lighting Systems

9.5.3.1 Design Bases

There are three basic lighting systems in the plant (see section 9.5.3.3 for the Diesel Generator building lighting) designated as follows: normal, standby, and emergency. These systems are

designed in accordance with the recommendations of the Illuminating Engineering Society, National Electrical Code, and good engineering practice to provide the required illumination necessary for safe conduct of plant operations and under normal conditions to make the plant personnel as comfortable as possible.

The normal system is designed to economically provide the amount and quality of illumination to meet normal plant operations and maintenance requirements.

The standby system, on loss of the normal lighting system, provides the minimum illumination level necessary to support the safe shutdown of the reactor and the evacuation of personnel from the plant if the need should occur. It forms an integral part of the normal lighting requirements but is fed from an entirely independent source.

The emergency lighting system, fed from independent direct current (DC) voltage sources, provides immediately the minimum illumination level in areas vital to the safe shutdown of the reactor when the other lighting systems are unavailable.

9.5.3.2 Description of the Plant Lighting Systems

All plant lighting systems have the following features in common: adequate capacity and rating for the operation of all loads connected to the systems, independent wiring and power supply, overcurrent protection for conductor and equipment using nonadjustable circuit breakers, and copper conductors with 600 Volt insulation run in metal raceways (except flex conduit utilized for some low voltage lighting).

The insulated cable used inside the primary containment area is resistant to nuclear radiation and chemical environmental conditions in this area.

The plant lighting system consists of three basic schemes, the first of which is the normal lighting. This system is for general lighting of the plant; the major power supply is through normal and alternate feeders from the 6.9 kV common boards A and B to 3-phase, 120/208 Volt AC transformers feeding lighting boards distributed throughout the main plant. Other lighting boards in the service building, office building, gatehouse, etc., are fed from various 480 Volt boards through 3-phase 120/208 Volt AC transformer. These lighting boards feed the normal lighting cabinets, designated by the prefix LC. In the power board rooms and control rooms, alternate rows of fixtures or alternate fixtures are fed from different lighting boards to prevent total blackout in a particular area in case of failure of one of the other lighting boards or cabinets.

The second system is the standby lighting which forms a part of the normal lighting requirements and is energized at all times. This system is fed from 480 Volt shutdown boards 1A2-A, 2A2-A, 1B1-B, and 2B1-B to 3-phase 120/208 Volt AC transformers to each standby lighting cabinet, designated by the prefix LS. The shutdown boards have a normal and alternate ac power supply and in event of their failure are fed from the diesel generators. The cable feeders to the standby cabinets located in the Category 1 structure are routed in redundant raceways and the fixtures are dispersed among the normal lighting fixtures.

The third lighting system is referred to as the emergency system. The feeder to this system is electrically held in the off-position until a power failure occurs on the AC systems. Then the emergency lighting cabinets, designated by the prefix LD, are automatically energized from the

125-Volt DC vital battery boards. This system is an essential supporting auxiliary system for the ESF, and the cable feeders to the LD cabinets are routed on the redundant ESF cable tray system or in conduit. The fixtures are dispersed among the normal and standby fixtures with alternate emergency fixtures being fed from redundant power trained LD cabinets.

In addition, eight-hour battery-powered emergency lighting system is provided as described in the Fire Protection Report (see Section 9.5.1).

9.5.3.3 Diesel Generator Building Lighting System

The diesel generator building lighting cabinets are fed through 480-208/ 120 Volt 3-phase local lighting transformers, which in turn are fed from the diesel 480 Volt auxiliary boards respectively. Each of these auxiliary boards has dual feeders from the 480 Volt shutdown boards, and ultimately the diesel generators if normal power is not available. Each diesel generator unit has a lighting cabinet which supplies approximately one-half of the lighting for that unit, with the remaining half being supplied from the lighting cabinet of the adjacent like-trained unit.

9.5.3.4 Functions of the Lighting System

The normal system is designed to provide the amount and quality of illumination to meet normal plant operations, maintenance, and evacuation requirements.

The standby system provides low level lighting in the vital areas, less critical areas, and exit points for support of the safe shutdown of the reactor and evacuation of personnel.

The emergency lighting in the vital areas is adequate for the safe shutdown of the reactor and the evacuation of personnel.

9.5.3.5 Inspection and Testing Requirements

Following the complete installation of a lighting system in the protected area, it shall be inspected and tested. The maintenance and relamping of the normal and standby lighting system shall be according to routine plant operating procedures.

The 125 Volt emergency lighting system shall be tested periodically by tripping the holding coil circuit fed from the LS standby cabinet, thus closing the feeder circuit to the LD emergency cabinet. All emergency lamps of this system shall be inspected and replacements made where necessary. A written record of dates and results of these tests shall be maintained by plant personnel responsible for these tests.

9.5.4 Diesel Generator Fuel Oil System

9.5.4.1 Design Bases

That portion of the Diesel Generator Fuel Oil System within the Diesel Generator Building is designed to Class I seismic requirements, and is designed to be impervious to the effects of tornadoes, hurricanes, floods, rain, snow, or ice as defined in Chapter 3 of this document.

The system has storage and transfer capacity to supply No. 2 diesel fuel to all four diesel generator sets operating at full load for a period not less than 7 days, with the ability to replenish the supply from offsite sources during that time.

The design code requirements for the system are as follows:

1. Diesel Generator Building fuel oil storage tanks - Code for Unfired Pressure Vessels, ASME Section VIII, Division I.

2. Piping, valves, pumps, and associated equipment - Power Piping Code, ANSI B31.1-1967. The system is designed with the ability to meet single failure criterion.

9.5.4.2 Description

The flow diagram of the Diesel Generator Fuel Oil System is shown in Figure 9.5.4-1.

The Diesel Generator Fuel Oil System consists of four embedded storage tank assemblies, one for each diesel generator unit, and associated pumps, valves, and piping. The tanks are embedded in the Diesel Generator Building substructure with a capacity of approximately 68,000 gallons of fuel for each Diesel Generator (DG) unit.

Two engine-mounted, motor-driven, 15 gal/min pumps are provided for each DG unit to transfer fuel from the embedded storage tank assemblies to the two 550 gallon engine-mounted day tanks per DG unit. Each of these pumps is capable of supplying fuel to both day tanks. Two sets of level switches are provided for each day tank. The level switches are arranged so that each pump serves as the primary pump for its respective day tank, and the backup pump for the other day tank. In the configuration, both tanks are filled by either pump.

A 200 gal/min transfer pump located in the fuel oil transfer pump room of the Diesel Generator Building has been provided to accomplish the following functions:

1. Transfer oil from any embedded diesel oil storage tank to any other.

2. Transfer oil from any embedded diesel oil storage tank to either of two 70,000 gallon yard fuel oil storage tanks.

3. Reject oil from the embedded diesel oil storage tank through a reject connection in the yard.

A 200 gal/min transfer pump located adjacent to the yard fuel oil storage tanks is provided to accomplish the following functions:

1. Transfer oil from a tank truck to either of two yard fuel oil storage tanks.

2. Transfer oil from either yard fuel oil tank to the other.

3. Transfer oil from either yard fuel oil tank to any one of the four Diesel Generator Building embedded fuel oil storage tank assemblies.

4. Reject oil from either yard fuel oil tank through a reject connection in the yard.

The diesel building storage tanks may be filled directly from a tank truck at fill connections located outside the Diesel Generator Building.

Level switches are provided on the diesel building storage tanks to accomplish the following functions:

1. Provide local level indication.

2. Annunciate an alarm in the main control room when the fuel level drops below a 7 day supply.

3. Provide an interlock with the 200 gal/min transfer pumps at the yard storage tanks and in the fuel oil transfer pump room of the diesel building to shutoff the pumps automatically on a high level.

4. Annunciate an alarm in the main control room on a high level above the pump shutoff setting.

The 200 gal/min transfer pumps provide a capacity ratio to the total fuel consumption of all generators of approximately 10:1.

9.5.4.3 Safety Evaluation

With a 68,000 gallon capacity of diesel fuel in each fuel tank assembly, and each assembly embedded in the concrete substructure of a Class I seismic building and separated by 18 inches of concrete, the diesel generating units will be assured of having at least a 7 day fuel supply in the event any of the aforementioned environmental conditions prevail.

Additional fuel oil can be procured and delivered to the site by tank truck to refill the embedded Diesel Generator Building storage tanks through the Class I seismic fill connections provided immediately outside the building, in the event the 70,000 gallon yard storage tanks or the transfer pipeline between the yard storage tanks and the Diesel Generator Building are damaged or destroyed by an earthquake or tornado, and additional oil is needed after 7 days.

A 0.125 corrosion allowance has been provided in the design of the wall thickness for the Diesel Generator Building embedded fuel oil storage tanks. The fuel oil piping and fittings within the Diesel Generator Building have more than ample corrosion allowance, having been designed per the Power Piping Code, ANSI B31.1-1967, and expected to operate at a pressure considerably below the maximum allowable for size and schedule pipe fittings used.

9.5.4.4 Inspection and Testing Requirements

Provisions have been made for the removal of water and/or sludge buildup from the bottoms of the Diesel Generator Building fuel oil storage tanks, and the engine-mounted day tanks due to condensation. A periodic inspection program is utilized for the detection and removal of the buildup.

A program has been established to inspect incoming fuel oil supplies to assure the specified grade and quality of fuel is being delivered.

Finally, a program will be initiated to sample and inspect the fuel stored in the Diesel Generator Building embedded tanks for deterioration and algae growth and to introduce proper additives to inhibit the deterioration and/or growth of algae or, if necessary, dispose of the fuel and replace it with fresh fuel.

9.5.5 Diesel Generator Cooling Water System

A closed circuit jacket cooling water system is furnished for each engine (Figure 9.5.5-1). Each system includes pumps, heat exchanger, expansion tank, and all accessories required for a cooling loop. Thermostatically controlled jacket water immersion heaters are provided for each engine to maintain the jacket water temperature within a specified range while the DGs are in standby mode to reduce the thermal stresses and assure faster starting and load acceptance capability. Jacket water flows through the lube oil cooler by thermosyphon action. The engine cooling water (closed loop) is circulated through the shell side of the heat exchanger by two engine-shaft-driven pumps. An electric-motor-driven lube oil circulation pump is also provided for each engine to circulate the lube oil through the lube oil cooler which is warmed or cooled by the jacket water and returned to the engine sump. The lube oil circulation pump runs continuously when the engine is not running.

Each diesel generator set is provided with two closed circuit engine cooling water loops, one for each engine. The heat sink for the engine cooling water loop is provided by the Essential Raw Cooling Water System (ERCW) which flows through the tube side of the heat exchanger. Minimum ERCW design flow to each emergency diesel generator heat exchanger is at least 400 gpm (including 5 percent measurement uncertainties and including reference to Tubular Exchanger Manufacturers association for fouling factor of 0.0020 Hr-degree Fahrenheit-foot squared per Btu) (Reference 1). The DG sets and cooling water system satisfies the single failure criteria.

9.5.6 Diesel Generator Starting System

Each diesel engine is equipped with an independent pneumatic starting system complete with valves, piping, controls, etc. (as shown in Figure 9.5.6-1). Four (2 sets of 2 each) starting air motors are provided for each diesel engine. Two electric-motor-driven air compressors are provided for each diesel generator set. Two accumulators are provided for each diesel engine. Each accumulator set is sized for an air storage capacity sufficient to start the engine five times without recharging. Each set of accumulators is equipped with shutoff valves, pressure gauges, safety valves, and low-pressure alarm contacts for use on the 125 Volt direct current circuit.

Redundant equipment is provided for each set such as air compressors, accumulators, starting air motors, and accessories so that a failure of a component will not jeopardize the design starting capacity of the system.

9.5.7 Diesel Generator Lubrication System

The Engine Lubricating Oil System (ELOS) prelubes the engine, supplies oil under pressure to the various moving parts of the engine as well as supplying oil for the cooling of the pistons. Since the operating pressure range is determined by such things as manufacturing tolerances, oil temperature, oil dilution, wear, and engine speed, specific operating pressures will vary. However, an overpressure relief is provided. An AC and DC soak back oil pumps are provided to lubricate/cool the turbochargers.

The lubricating oil pumps are positive displacement type and mounted externally for accessibility. The scavenging, main, and piston cooling oil pumps are shaft-driven from the diesel engines.

The ELOS provides for filtering and cooling the oil. The filters are cartridge type with automatic bypass. The oil is maintained within a specified temperature range via the lubricating oil cooler by the Closed Circuit Cooling Water System (refer to Section 9.5.5, Diesel Generator Cooling Water System).

The lubricating oil is maintained at a predetermined temperature by heating when the engine is not operating to ensure rapid starting.

An individual lubricating oil system is provided for each diesel generator engine. A failure in one lubricating oil system will not jeopardize the operation of the other diesel engines.

Each engine crankcase sump contains ample lubricating oil for 7 days of full load operation without requiring replenishment. Additional oil is stored within the Diesel Generator Building to replenish the engines for longer periods of operation and to "top-off" the engines after their periodic exercising operations. Additional oil can also be procured from off the site for extremely long periods of operation.

9.5.8 Hydrogen System

9.5.8.1 Design Bases

The design bases for the hydrogen system are as follows: 1) to provide hydrogen to the main electric generators for cooling; and 2) to provide a cover gas on the volume control tank to maintain the hydrogen concentration in the design range.

9.5.8.2 System Description

Hydrogen is supplied from the hydrogen transport trailers located in the hydrogen trailer port. The hydrogen is reduced in pressure at the trailer port and is fed through two headers to the secondary control stations located near the turbine and auxiliary buildings. At the secondary control stations, the hydrogen is further reduced in pressure before being supplied to the generators and volume control tanks.

9.5.8.3 Design Evaluation

In the event of a sudden increase in flow of hydrogen into the Auxiliary Building, a flow element installed in the hydrogen piping will detect the increase and automatically close two control valves, one located in the secondary control cabinet and the other located in a cabinet adjacent to the Auxiliary Building wall. The ventilation system is designed to pull air through the volume control tank rooms and through the passageways where the header runs. Because of this air flow a major hydrogen leak would produce a maximum H_2 concentration less than 1% which is far below the 4% safe concentration for H_2 in air.

9.5.8.4 Tests and Inspections

Periodic pressure tests and inspections are performed to detect minor leaks.

9.5.8.5 Instrumentation Application

The main instruments in this system are pressure gages and the control valves which control the pressure and flow.

Flow Diagrams

The flow diagram for this system is shown in Figure 11.3.2-2.

9.5.9 Nitrogen System

9.5.9.1 Design Bases

The bases for the nitrogen system is the need for a cover gas and also for the degasification purging of the volume control tank and other components. It maybe used to dilute stored waste gas if the H_2 and O_2 ratio approach the explosive limit in the waste gas decay tanks.

9.5.9.2 System Description

The nitrogen supply system is a shared system and is divided into two sections; a low pressure section and a high pressure section. The high pressure section is for pressurization of the accumulators and inerting of the steam generators. The large quantities of nitrogen gas required are supplied from a tank truck using the truck fill connections located in the wall at the railroad area of waste packaging or from a liquid nitrogen system located outside the auxiliary building. There are separate lines to Unit 1 and to Unit 2 with cross-connections between them. For makeup, high pressure gas is taken from the dual 24-bottle section provided for the low pressure section.

The low pressure section is used to purge the vapor space of various components to reduce the hydrogen concentration or to replace fluid that has been removed. This system consists of a dual bank of 24 bottles each, connected to a manifold with an automatic controller. When the operating header is exhausted, its discharge pressure will fall below a set point and an alarm will alert the operator. The second bank will come into service automatically to ensure a continuous supply of gas. The operator will then reset the pressure to 100 psig and see that the exhausted bottles are refilled.

9.5.9.3 System Evaluation

Since the nitrogen system is not an engineered safety feature, accident conditions are not considered. The nitrogen system is TVA safety class G by virtue of its location in the auxiliary building.

9.5.9.4 Instrumentation Application

The instruments for this system are shown on the flow diagram, in Figure 11.3.2-2.

9.5.10 Postaccident Sampling Program and Facility

The program will ensure the capability to obtain and analyze reactor coolant, radioactive iodines and particulates in plant gaseous effluents, and containment atmosphere samples under accident conditions. The program shall include the following:

(i) Training of personnel,
(ii) Procedures for sampling and analysis,
(iii) Provisions for maintenance of sampling and analysis equipment.

9.5.10.1 Design Basis

The postaccident sampling facility (PASF) is designed to safely obtain, transfer, analyze, and dispose of, as necessary, samples of reactor coolant, containment sump water, and the containment atmosphere samples. Each reactor unit has its own respective PASF that will obtain the necessary samples following a loss of coolant accident (LOCA).

As committed in Technical Specification Change 01-11, the following commitments must be addressed in the design change for eliminating PASS from the plant.

1. TVA will develop contingency plans for obtaining and analyzing highly radioactive samples of reactor coolant, containment sump, and containment atmosphere. The contingency plans will be contained in technical procedures and implemented in accordance with the License amendment.

2. The capability for classifying fuel damage events at the Alert level threshold will be established at radioactivity levels of greater than or equal to 300 μCi/gm dose equivalent iodine. This capability will be described in emergency plan implementing procedures.

3. TVA will establish the capability to monitor radioactive iodines that have been released to offsite environs. This capability will be described in chemistry and radiation protection implementing procedures.

9.5.10.2 Facilities

The major components of the postaccident sampling system (PAS) are discussed in the following sections.

9.5.10.2.1 Reactor Coolant and Containment Sump Sampling System

Each unit has a reactor coolant sampling system equipped with a closed cooling water heat exchanger to cool the sample as it is acquired by the liquid sampling panel (LSP). Samples are taken from the reactor coolant hot legs and from the containment sump, when the RHR system is in the recirculation mode of operation. The PASF is equipped with the necessary calibration reagents, with dilution water, and with flush water lines. Waste sample streams are discharged to the PASF Collector Drain Tank which is drained into the tritiated drain collector tank or the containment sump.

9.5.10.2.2 Containment Air Sampling System

Acquisition of the containment air samples is performed by the Radiological and Chemical Technology (RCT) particulate, iodine, and gas separation system and the Security Equipment Corporation (SEC) shielded syringe, jointly.

These samples are subsequently transported to an onsite facility for isotopic analysis. Hydrogen levels in the containment atmosphere are determined by the containment hydrogen monitors.

9.5.10.2.3 Sampling and Analysis Capabilities

Samples acquired in the PASF can be transported to an onsite laboratory where analyses not performed in the PASF can be completed. Provisions are established for offsite analysis support. The postaccident sampling and analysis capabilities are shown in Table 9.5.10-1.

9.5.10.3 Design Evaluation

The design life of all major components, equipment, and instrumentation is 40 years. Items designed for postaccident service will be designed to remain functional in the expected postaccident environment.

9.5.10.4 Tests and Inspections

The equipment located in the PASF will be tested and inspected to verify equipment operability and availability.

9.5.11 References

1. Commitment NCO070017001 (S10 071212 800)

SQN-26

COMMUNICATION EQUIPMENT AVAILABILITY TOOL

Table 9.5.2-1

POSTULATED CONDITIONS	OPTICAL PGW	TELEPHONE LINES	RC RADIO	TPS RADIO	NUCLEAR SECURITY SERVICE RADIO	SHERIFF RADIO	INPLANT RADIO SYSTEM	Wi-Fi System (Cordless VoIP Telephones)	PRIVATE TELEPHONE EXCHANGE EPBX	SOUND POWERED TELEPHONE SYSTEMS	CLOSED CIRCUIT TELEVISION (CCTV)	PAGING SYSTEM	EVACUATION ALARM SYSTEM
FIRE IN COMMUNICA-TIONS ROOM (TOTAL DESTRUCTION)	X	PARTIAL		PARTIAL	PARTIAL	X	X	PARTIAL (loss of offsite communication)		X	X		
FIRE IN CABLE TUNNEL TO SWITCHYARD		PARTIAL	X	X	X	X	X	X	X	X	X	X	X
FIRE IN CONTROL ROOM	X	X	X	X	X	X	X		X	PARTIAL	PARTIAL	PARTIAL	PARTIAL
DBA	X	X	X	X	X	X	X	X	X	X			X
SSE					PARTIAL (VEHICULAR & PORTABLE UNITS)		Partial (Portable Limits)						
LOSS OF OFFSITE POWER	X	X	X	X	X	X	X	X	X	X			X
LOSS OF ALL AC POWER	X	X			X		X		X	X			
MAXIMUM POSSIBLE FLOOD			X	X		X	PARTIAL		X	PARTIAL			
TORNADO		X	X	PARTIAL	PARTIAL		PARTIAL	X		X		X	X

NOTES:

1. "X" IN BLOCK INDICATES AVAILABLILITY OF THE SERVICE DURING THE POSTULATED CONDITION.
2. "PARTIAL" IN BLOCK INDICATES THE LOSS OF THAT PORTION OF THE SYSTEM LOCATED WHERE THE ACCIDENT OCCURRED. THE SURVIVING EQUIPMENT WILL REMAIN FUNCTIONAL.
3. "ERCS" EMERGENCY RADIO COMMUNICATIONS SYSTEM.

TABLE 9.5.10-1

SEQUOYAH NUCLEAR PLANT POSTACCIDENT SAMPLING PROGRAM

Sample Point	Parameter	Units	Sample/Analysis Range [2]	Sample/Analysis Response Time [4]	Sample Type
RCS and/or Cont. Sump [1]	Boron	PPM	50 to 6000 [3]	8 Hours	Grab Sample
RCS and/or Cont. Sump [1]	Gamma Spectrum	µCi/mL	N/A	3 Hours	Grab Sample
RCS and/or Cont. Sump [1]	Gross Activity	µCi/mL	10 to 1.0E+7	3 Hours	Determined by Totaling Gamma Isotopic Activities
RCS and/or Cont. Sump [1]	Chloride	PPM	0.1 to 20	24 hours (Sampling) 96 Hours (Analysis)	Online Sample and Provisions Are Established for Off Site Analysis
RCS	Dissolved Hydrogen or Total Gas	CC(STP)/Kg	10 to 2000	24 Hours	Grab Sample
Containment Atmosphere	Gamma Spectrum	µCi/cc	N/A	3 Hours	Grab Sample

Notes:

[1] The Containment Sump is sampled via the Residual Heat Removal System following a Loss-Of-Coolant Accident.

[2] The Sampling/Analysis Ranges are in accordance with Regulatory Guide 1.97.

[3] Accuracy for boron with boron 50 to 500 ppm is ± 50 ppm, with boron 500-6000 ppm accuracy is ± 10%.

[4] Following a Potential Core Damage Accident, sampling/analysis is capable of being performed within the stated response times after the accident.

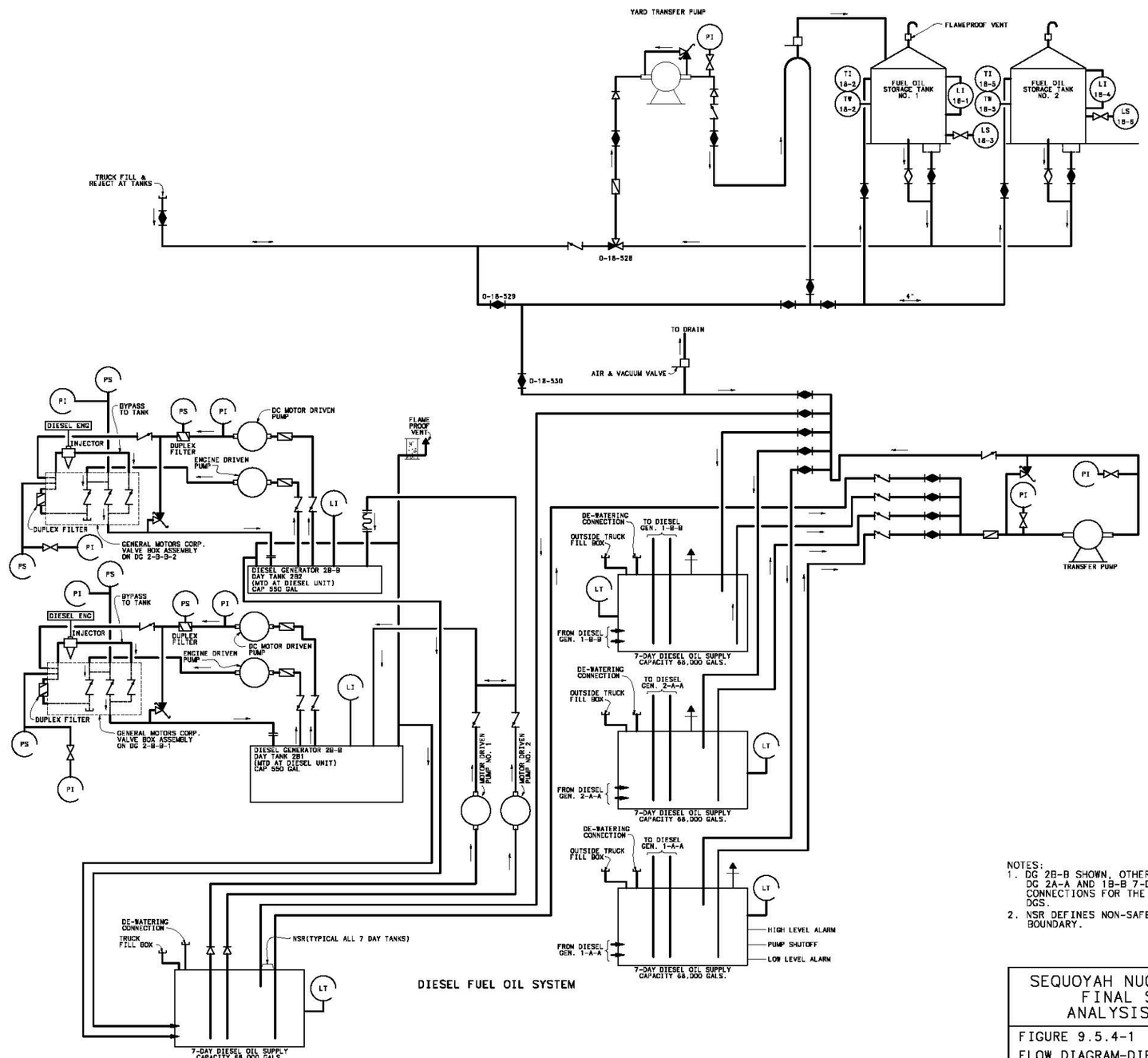

NOTES:
1. DG 2B-B SHOWN, OTHER DG'S SIMILAR. DG 2A-A AND 1B-B 7-DAY TANKS HAVE CONNECTIONS FOR THE 6900V 3MW FLEX DGS.
2. NSR DEFINES NON-SAFETY RELATED BOUNDARY.

SEQUOYAH NUCLEAR PLANT
FINAL SAFETY
ANALYSIS REPORT

FIGURE 9.5.4-1
FLOW DIAGRAM-DIESEL FUEL OIL

(REVISED BY AMENDMENT 26)

CAD MAINTAINED DRAWING

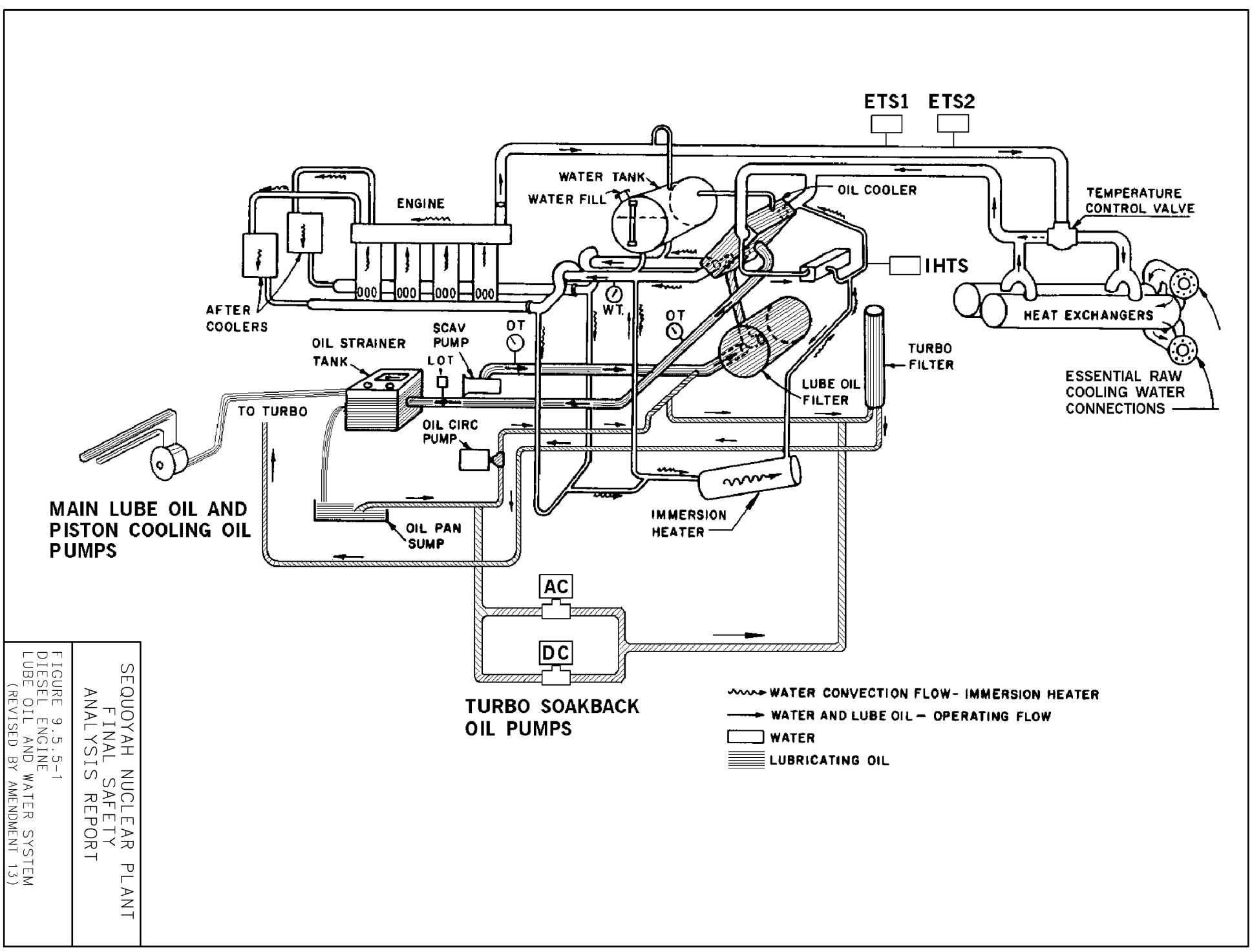

SEQUOYAH NUCLEAR PLANT
FINAL SAFETY
ANALYSIS REPORT

FIGURE 9.5.5-1
DIESEL ENGINE
LUBE OIL AND WATER SYSTEM
(REVISED BY AMENDMENT 13)

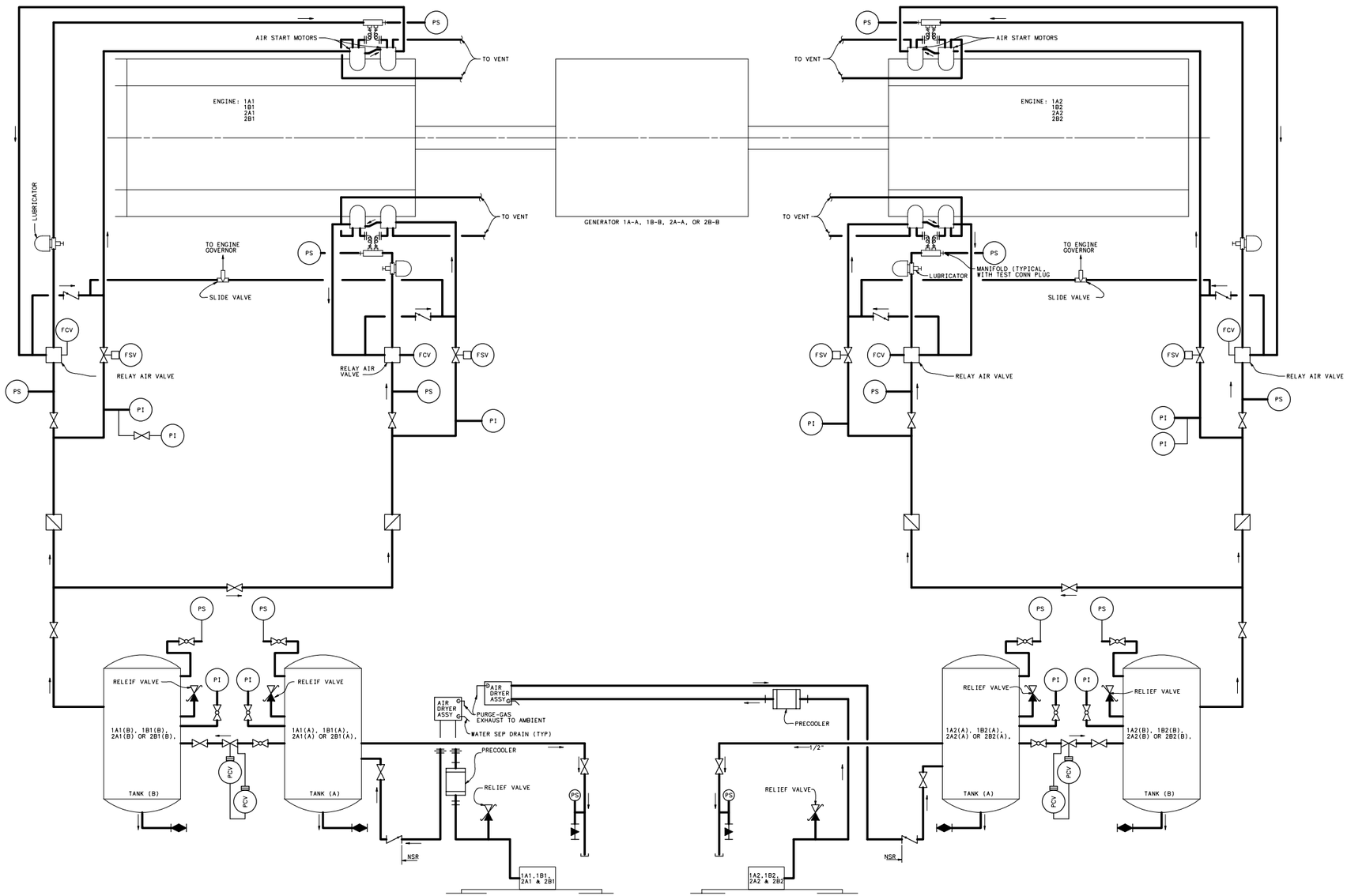

SEQUOYAH NUCLEAR PLANT
FINAL SAFETY
ANALYSIS REPORT

FIGURE 9.5.6-1
DIESEL STARTING AIR SYSTEM
FLOW DIAGRAM
(REVISED BY AMMENDMENT 29)

CAD MAINTAINED DRAWING

TABLE OF CONTENTS

10.0	STEAM AND POWER CONVERSION SYSTEM	
10.1	SUMMARY DESCRIPTION	10.1-1
10.2	TURBINE GENERATOR	10.2-1
10.2.1	DESIGN BASIS	10.2-1
10.2.2	DESCRIPTION	10.2-1
10.2.3	TURBINE MISSILES	10.2-2
10.2.3.1	Potential Missile Sources and Missile Characteristics	10.2-3
10.2.3.2	Turbine Missile Protection Criterion	10.2-12
10.2.3.3	Essential Safety-Related Equipment and Structures	10.2-12
10.2.3.4	Turbine Missile Hazard Evaluation	10.2-12
10.2.4	EVALUATION	10.2-15
10.2.5	REFERENCES	10.2-16
10.3	MAIN STEAM SUPPLY SYSTEM	10.3-1
10.3.1	DESIGN BASES	10.3-1
10.3.2	SYSTEM DESIGN DESCRIPTION	10.3-1
10.3.2.1	System Design	10.3-1
10.3.2.2	Material Compatibility, Codes, and Standards	10.3-3
10.3.2.3	NRC Bulletin 88-02 Analysis	10.3-3
10.3.3	DESIGN EVALUATION	10.3-4
10.3.4	TESTS AND INSPECTIONS	10.3-5
10.3.5	WATER CHEMISTRY	10.3-5
10.3.5.1	Purpose	10.3-5
10.3.5.2	Chemistry Specifications	10.3-6
10.3.5.3	Chemistry Control	10.3-6
10.3.5.4	Effect of Water Chemistry on the Radioactive Iodine Partition Coefficient	10.3-7
10.3.6	INSTRUMENT APPLICATION	10.3-7
10.3.7	REFERENCES	10.3-7

TABLE OF CONTENTS

10.4	OTHER FEATURES OF STEAM AND POWER CONVERSION SYSTEM	10.4-1
10.4.1	MAIN CONDENSER	10.4-1
10.4.1.1	Design Bases	10.4-1
10.4.1.2	System Description	10.4-1
10.4.1.3	Safety Evaluation	10.4-2
10.4.1.4	Inspection and Testing	10.4-3
10.4.1.5	Instrumentation	10.4-3
10.4.2	MAIN CONDENSER EVACUATION SYSTEM	10.4-3
10.4.2.1	Design Bases	10.4-3
10.4.2.2	System Description	10.4-3
10.4.2.3	Safety Evaluation	10.4-4
10.4.2.4	Inspection and Testing	10.4-4
10.4.2.5	Instrumentation	10.4-5
10.4.3	TURBINE GLAND SEALING SYSTEM	10.4-5
10.4.3.1	Design Bases	10.4-5
10.4.3.2	System Description	10.4-5
10.4.3.3	Safety Evaluation	10.4-5
10.4.3.4	Inspection and Testing	10.4-6
10.4.3.5	Instrumentation	10.4-6
10.4.4	TURBINE BYPASS SYSTEM	10.4-6
10.4.4.1	Design Bases	10.4-6
10.4.4.2	System Description	10.4-7
10.4.4.3	Safety Evaluation	10.4-7
10.4.4.4	Inspection and Testing	10.4-8
10.4.4.5	Instrumentation	10.4-8
10.4.5	CONDENSER CIRCULATING WATER SYSTEM	10.4-8
10.4.5.1	Design Basis	10.4-8
10.4.5.2	System Description	10.4-8
10.4.5.3	Safety Evaluation	10.4-10
10.4.5.4	Tests and Inspection	10.4-11
10.4.5.5	Instrumentation Application	10.4-11
10.4.6	CONDENSATE POLISHING DEMINERALIZER SYSTEM	10.4-11
10.4.6.1	Design Bases - Power Conversion	10.4-11
10.4.6.2	System Description	10.4-12
10.4.6.3	Safety Evaluation	10.4-14
10.4.6.4	Tests and Inspections	10.4-14
10.4.6.5	Instrumentation	10.4-14
10.4.7	CONDENSATE-FEEDWATER SYSTEM	10.4-15
10.4.7.1	Condensate-Main Feedwater System	10.4-15
10.4.7.2	Auxiliary Feedwater System	10.4-21

TABLE OF CONTENTS

10.4.8	STEAM GENERATOR BLOWDOWN SYSTEM (SGB)	10.4-39
10.4.8.1	Design Bases	10.4-39
10.4.8.2	System Description	10.4-41
10.4.8.3	Safety Evaluation	10.4-42
10.4.8.4	Tests and Inspections	10.4-43
10.4.8.5	Instrumentation Applications	10.4-44
10.4.9	HEATER DRAINS AND VENTS	10.4-44
10.4.9.1	Design Bases	10.4-44
10.4.9.2	System Description	10.4-44
10.4.9.3	Safety Evaluation	10.4-48
10.4.9.4	Inspection and Testing	10.4-49
10.4.9.5	Instrumentation	10.4-49
10.4.10	REFERENCES	10.4-49

LIST OF TABLES

Number	Title
10.1-1	Summary of Important Component Design Parameters
10.2.3-1	Minimum Mechanical Properties for Low-Pressure Turbine Discs
10.2.3-2	Summary of Calculated Results Based on Failure at 186% of Rated Speed
10.2.3-3	Exit Missile Properties for Low-Pressure Discs (and Fragments) - All Low Pressures
10.2.3-4	Low-Pressure Cylinder and Blade Ring Fragment Dimensions
10.2.3-5	Strike Probability Data for Missiles Originating in Low-Pressure Turbine Low-Pressure 2A
10.3.2-1	Main Steam Supply System - Applicable Codes, Standards and Design Conditions
10.3.3-1	Main Steam Supply System Seismic Category I Valves
10.4.1-1	Main Condenser Radioactive Material Activity During Power Operation and Shutdown
10.4.7-1	Criteria for Auxiliary Feedwater System Design Basis Conditions
10.4.7-2	Auxiliary Feedwater Pump Parameters
10.4.7-3	Summary of Sensible Heat Sources
10.4.7-4	Auxiliary Feedwater Flow to Steam Generators Following an Accident/Transient with Selected Single Failure-GAL/MIN
10.4.7-5	Auxiliary Feedwater System Comparison to SRP 10.4.9 and BTP ASB 10-1
10.4.7-6	Responses to Short- and Long-Term Recommendations Resulting from a General NRC Investigation of AFWS
10.4.8-1	Failure Analysis, Steam Generator Blowdown System

LIST OF FIGURES

Number	Title
10.1-1	Flow Diagrams, General BOP Systems
10.1-2	Unit 1 Heat Balance, 100% MW Thermal
10.1-3	Unit 2 Heat Balance, 100% MW Thermal
10.2.3-1	LP Disc Missiles
10.2.3-2	LP Cylinder and Blade Ring Fragments
10.2.3-3	Physical Dimensions of Important Potential Turbine Missiles
10.2.3-4	Relationship of Essential Safety-Related Equipment and Structures to the Turbine Missile Sources
10.3.2-1	Flow Diagram, Main and Reheat Steam
10.4.2-1	Flow Diagram - Condensate
10.4.5-1	Flow Diagram - Condenser Circulating Water
10.4.5-2	Flow Diagram - Condenser Circulating Water
10.4.7-1	Flow Diagram - Condensate
10.4.7-2	Flow Diagram - Feedwater
10.4.7-3	Motor Driven Auxiliary Feedwater Pump Logic
10.4.7-4	Turbine Driven Auxiliary Feedwater Pump Logic
10.4.7-5	Flow Diagram Auxiliary Feedwater
10.4.7-6	Pump Characteristics, Turbine-Driven Auxiliary Feedwater
10.4.7-7	Pump Characteristics, Motor-Driven Auxiliary Feedwater
10.4.8-1	Flow Diagram Steam Generator Blowdown System
10.4.8-2	Radioactivity Concentrations in the Secondary System as a Function of Steam Generator Blowdown Rate
10.4.8-3	Effect of Blowdown Rate on I-131 Release
10.4.9-1	Flow Diagram - High Pressure Heater Drains and Vents
10.4.9-2	Flow Diagram Low Pressure Heater Drains and Vents

10.0 STEAM AND POWER CONVERSION SYSTEM

10.1 SUMMARY DESCRIPTION

The Steam and Power Conversion System is designed to convert the heat produced in the reactor to electrical energy through conversion of a portion of the energy contained in the steam supplied from the steam generators, to condense the turbine exhaust steam into water, and to return the water to the steam generator as heated feedwater.

The major components of the Steam and Power Conversion System are: turbine-generator, main condenser, vacuum pumps, turbine seal system, turbine bypass system, hotwell pumps, condensate booster pumps, main feed pumps, main feed pump turbines (MFPT), feedwater heaters, heater drain pumps, condensate demineralizer system, and condensate storage system. Component arrangement is shown in Figure 10.1-1. The heat rejected in the main condenser is removed by the circulating water system.

The saturated steam produced by the steam generators is expanded through the high pressure turbine and then exhausted to the moisture separator/ reheaters. The moisture separator section removes the moisture from the steam and the two stage reheaters superheat the steam before it enters the low pressure turbines. The steam then expands through the low pressure turbines and exhausts into the main condenser where it is condensed and deaerated and then returned to the cycle as condensate.

The first stage reheater is supplied with steam from the No. 1 extraction point; the condensed steam is cascaded to the No. 2 heater. The second stage reheater is supplied with main steam; the condensed steam cascades to the highest pressure (No. 1) heater.

Condensate is withdrawn from the condenser hotwells by motor-driven hotwell pumps. The pumps discharge into a common header which can carry the condensate through the full flow condensate demineralizers to the demineralized condensate pumps. Normally a percentage (typically 10-30 percent) of the condensate is polished and the remainder of the condensate flow bypasses the condensate demineralizers. These pumps discharge into a common header which carries the condensate through the gland steam condenser (partial flow), the main feed pump condensers, and then through three parallel strings of low-pressure heaters. Each string of low pressure heaters consists of three stages, Nos. 5 through 7, with No. 5 the highest pressure. After passing through the low pressure heaters, the condensate discharges into a common header which carries it to the condensate booster pumps. These pumps discharge to a common header which divides back into three parallel strings of intermediate-pressure heaters, each string consisting of three stages (Nos. 2 through 4) of extraction feedwater heaters. The condensate from the intermediate pressure heater strings is then routed to the main feed pumps. These pumps discharge to a common header which divides and passes through three parallel strings of single-stage high-pressure heaters and returns to a common line before dividing into four streams to the four steam generators. SG blowdown heat exchangers also receive condensate flow for cooling the blowdown.

Heat for the feedwater heating cycle is supplied by the moisture separator reheater drains and by steam from the turbine extraction points. A summary description of the important components and design parameters of the Steam and Power Conversion System is contained in Table 10.1-1. Heat balances for the steam and power conversion cycle are shown in Figures 10.1-2 and 10.1-3.

TABLE 10.1-1 (Sheet 1)

SUMMARY OF IMPORTANT COMPONENT DESIGN PARAMETERS

VERTICAL STEAM GENERATORS

Design data for the steam generators are provided in Table 5.5.2-1.

Operating Conditions at 100 Percent Load (Best Estimate)

	Unit 1	Unit 2
Steam flow rate	3.78 x 10^6 lb/h	3.79 x 10^6 lb/h
Steam temperature	530.3° F	530.3° F
Steam pressure	887 lb/in^{2}a	887 lb/in^{2}a
Steam quality	99.9 percent	99.9 percent

TURBOGENERATOR

Manufacturer - Westinghouse Electric Corporation
Turbogenerator nameplate rating - 1,183,192 kW

Turbine type -	Horizontal, reaction, tandem-compound, 2-stage reheat, extraction, condensing, 1800-r/min single shaft - 1 high-pressure and 3 low-pressure turbines with 6-flow exhaust and 44 inches last-stage buckets
Generator type and maximum nameplate rating -	One direct connected, hydrogen cooled rotor, water-cooled stator, 1,356,000 kVA, 0.9 power factor, 75 lb/in^{2}g hydrogen, 3 ph, 60 Hz, 24,000 V, 33,625 A, 0.6 scr, Y-connected
Exciter type and capacity -	One shaft-driven, brushless - 5500 kW, 525 V, 1800 r/min

Heat Rate*

Guaranteed performance based on extraction for feedwater heating, including all losses in the unit, also exciter and rheostat losses, rated throttle steam conditions, and 2.0 inches of Hg absolute exhaust pressure with zero makeup:

kW	Btu/kWh
1,183,192	9,871

* This information is provided for historical purposes only. This was the guaranteed tubogenerator performance based on the original plant design conditions.

Moisture Separator and Reheaters

Type -	Moisture removal separator and 2-stage reheater (both high pressure and low pressure are one pass shell and four pass U-tube reheaters).
Manufacturer -	Westinghouse Electric Corporation (moisture removal separator and reheater shell), South Western Engineering Co. (high- and low-pressure tube bundles). TEi, MSR Internal and External Modifications (Unit 2 only).
Tube Data -	High pressure - 484 U-tubes, 3/4 inch O.D., .040 inch wall thickness, SA-268 TPXM-8 (439), 27 fins/inch effective surface area of 20,005.9 square ft.

TABLE 10.1-1 (Sheet 2)

SUMMARY OF IMPORTANT COMPONENT DESIGN PARAMETERS

Low pressure - 447 U-tubes, 3/4 outside diameter, .049 inch wall thickness, SA-268 TPXM-8 (439), 27 fins/inch, effective surface area of 18,476.6 square ft.

Size - 46 ft., 1-1/8 inch length
10 ft., 9 inches diameter

Main Feedwater Pump Turbine

Number - (1 Turbine per pump) - 2
Manufacturer - Westinghouse Electric Corporation
Type and speed - EMM-25AN, multistage, dual inlet, 6000 r/min
Throttle pressure - Low-pressure steam, 160 lb/in^{2}a, high-pressure steam, 1060 lb/in^{2}a
Throttle temperature - Low-pressure steam, 494°F, high-pressure steam, 546°F
Back pressure - 5 inches of Hg absolute
Number of stages - 8
Extraction points - None
Rated horsepower - 11,700

Main Feedwater Pumps

Number - 2
Manufacturer - Borg-Warner Corporation, Byron Jackson Pump Division
Type - DVSR, single stage, double suction, double volute, centrifugal
Size - 14 x 14 x 17C
Design point - 20,000 gal/min, 1680-feet head
Service conditions - Pump suitable for continuous service to deliver up to 28,300 gal/min at 399.3°F against a total head of approximately 1405 feet at 6150 r/min, while operating under a minimum net positive suction head of 250 feet

Condensate Booster Pumps

Number - 3
Manufacturer - Borg-Warner Corporation, Byron Jackson Pump Division
Type - DVDSR, single stage, double suction, double volute, centrifugal
Size - 14 x 14 x 15H
Design point - 9000 gal/min, 680-feet head
Motor manufacturer - Hitachi, LTD
Motor design - 1750 hp, 3570 r/min, 6600 V, 3 ph, 60 Hz, horizontal, constant speed

No. 3 Heater Drain Pumps

Number - 3
Manufacturer - Borg-Warner Corporation, Byron Jackson Pump division
Type - DSJH, single stage, double suction, double volute, centrifugal
Size - 8 x 10 x 18H
Design point - 3600 gal/min, 1200-feet head
Motor manufacturer - Hitachi, LTD
Motor design - 1250 hp, 3570 r/min, 6600 V, 3 ph, 60 Hz, horizontal, constant speed

TABLE 10.1-1 (Sheet 3)

SUMMARY OF IMPORTANT COMPONENT DESIGN PARAMETERS

No. 7 Heater Drain Pumps

Number - 2
Manufacturer - Borg-Warner Corporation, Byron Jackson Pump Division
Type - DSJH, single stage, double suction, double volute, centrifugal
Size - 8 x 10 x 15L
Design point: 2300 gal/min, 830 feet

Motor manufacturer - Hitachi, LTD
Motor design: 700 hp, 3545 r/min, 6600 V, 3 ph, 60 Hz, horizontal, constant speed

Demineralized Condensate Pumps

Number - 3
Manufacturer - Ingersoll-Rand Company
Type of pump - AA, single stage, end suction, centrifugal
Size - 10 x 18
Design point - 6700 gal/min, 150-feet head
Motor manufacturer - Westinghouse Electric Corporation
Motor design - 350 hp, 1770 r/min, 460 V, 3 ph, 60 Hz, horizontal, constant speed

Condensate Hotwell Pumps

Number - 3
Manufacturer - Borg-Warner Corporation, Byron Jackson Pump Division
Type of pump - VMT, four stages, single suction, vertical process
Size - 28KXH
Design point - 6700 gal/min, 600-feet head
Motor manufacturer - Hitachi, LTD
Motor design - 1250 hp, 1180 r/min, 6600 V, 3 ph, 60 Hz, vertical, constant speed

Condenser

Number - 1
Manufacturer - Ingersoll-Rand Company
Type - Horizontal, triple shell, single pass, surface, deaerating
Total surface area, 757,952 ft^2
Tube data - 77,592 tubes, 49 feet, 9 inches effective length, 3/4 inch outside diameter, No. 24 BWG, B338 Gr2 Titanium (No. 22 BWG tubes used in impingement zone)
Tube sheets - Base material: Carbon steel; cladding material: Titanium
Waterboxes - Divided, two inlets (72 inches diameter) and two outlets (72 inches diameter) bottom connections per shell

TABLE 10.1-1 (Sheet 4)

SUMMARY OF IMPORTANT COMPONENT DESIGN PARAMETERS

Hotwell data - Deaerating type, storage capacity of hotwells at normal operating level, 32,992 gal
Circulating water quantity, gal/min - 530,600
Cleanliness, percent - 95
Duty, 10^9 Btu/hr - 7.829

Design pressures: Shell, lb/in^{2}g - 20
Hotwell, lb/in^{2}g - 20
Waterboxes, lb/in^{2}g - 25

Air Removal Equipment

Number - 3
Manufacturer - Nash Engineering Company
Size - AT-2004E
Type - Mechanical, 2-stage liquid ring pump
Design point - Suction pressure inch of Hg absolute - 1.0, rated capacity each - 15 SCFM
Motor manufacturer - General Electric Company
Motor design - 115 hp, 500 r/min, 460 V, 3 ph, 60 Hz, horizontal, constant speed

FEEDWATER HEATERS

Number - 21 (seven stages divided into three streams)
Type - Closed, horizontal, U-tube
Nos. 1 and 2 Heater Tubes: 304SS (Heater Manufacturer: YUBA)
Nos. 3 and 4 Heater Tubes: 304SS (Heater Manufacturer: Foster Wheeler)
Nos. 5, 6, and 7 Heater Tubes: SA-688-304 SS (Heater Manufacturer: Southwestern Engineering Company)

CONDENSATE CLEANUP SYSTEM

Number - Twelve service vessels (two batteries of service vessels; one battery per plant generating unit; six service vessels per battery). One regeneration subsystem (common to two plant generating units).
Manufacturer - L & A Water Treatment Division, Chromalloy American Corporation
Type - Deep bed (externally regenerated mixed-bed ion exchange process)
Size - 9 feet, 6 inches diameter condensate demineralizer service vessels
Design conditions - Capacity per unit battery - 17,000 gal/min (at full condensate flow)
Capacity per service vessel - 3400 gal/min (five service vessels in service, one standby)
Pressure - 300 lb/in^{2}g
Temperature - 140° F

TABLE 10.1-1 (Sheet 5)

SUMMARY OF IMPORTANT COMPONENT DESIGN PARAMETERS

SAFETY VALVES

Number - 5 per steam generator
Minimum Required Rated Capacity, - 3,917,000 lb/hr for each set of five safety valves (based on original maximum calculated turbine steam flow)
Nozzle Size - 16 sq. inches
Set Pressure - See Technical Specification 3.7.1, Table 3.7.1-2 for the steam generator safety valve setpoints.

Atmospheric Relief Valves

Number - 1 per steam generator
Minimum capacity, (Flood Mode) - 60,000 lb/hr @ 90 psig inlet pressure
Minimum capacity, (RHR cut-in) - 101,000 lb/hr @ 110 psig inlet pressure
Maximum capacity - 890,000 lb. hr @ 1085 psig inlet pressure
Outlet pressure - 0 psig

Turbine Bypass Valves

Number of valves - 12
Flow per valve, lb/h - 522,000
Main steam pressure at valve inlet (for above flow), lb/in^{2}g - 782
Maximum flow per valve at 1085 lb/in^{2}g inlet pressure, lb/h - 890,000
Time to open (full stroke), seconds - 3
Full stroke modulation, seconds - 20
Failure position - Closed

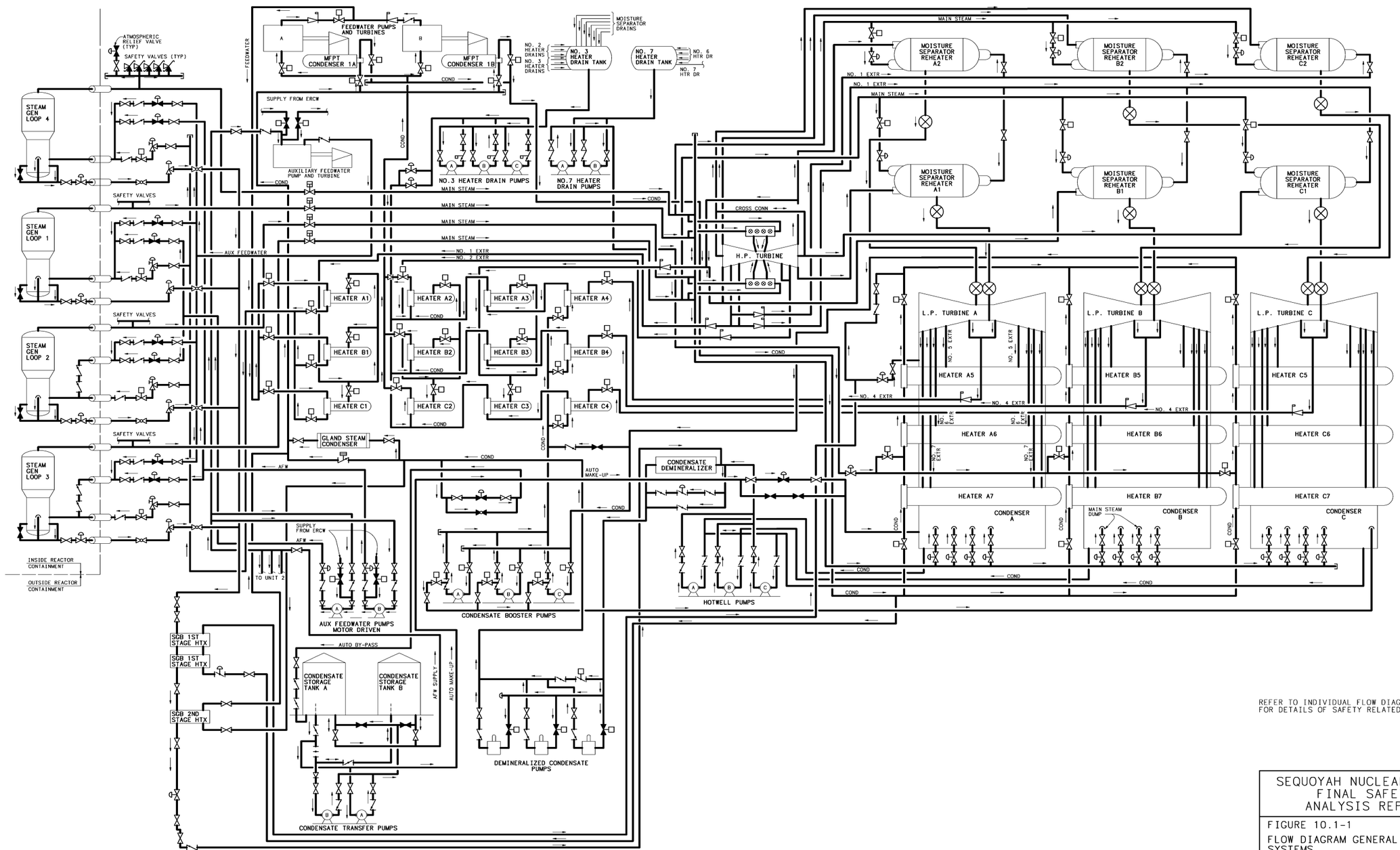

REFER TO INDIVIDUAL FLOW DIAGRAMS FOR DETAILS OF SAFETY RELATED SYSTEMS.

SEQUOYAH NUCLEAR PLANT
FINAL SAFETY ANALYSIS REPORT

FIGURE 10.1-1

FLOW DIAGRAM GENERAL BOP SYSTEMS
(REVISED BY AMMENDMENT 13)

DRAWING SERVICES UNIT
PROCAD MAINTAINED DRAWING
THIS CONFIGURATION CONTROL DRAWING IS MAINTAINED BY THE SQN CAD UNIT AND IS PART OF THE TVA PROCADAM DATABASE.
COMPUTER GRAPHICS

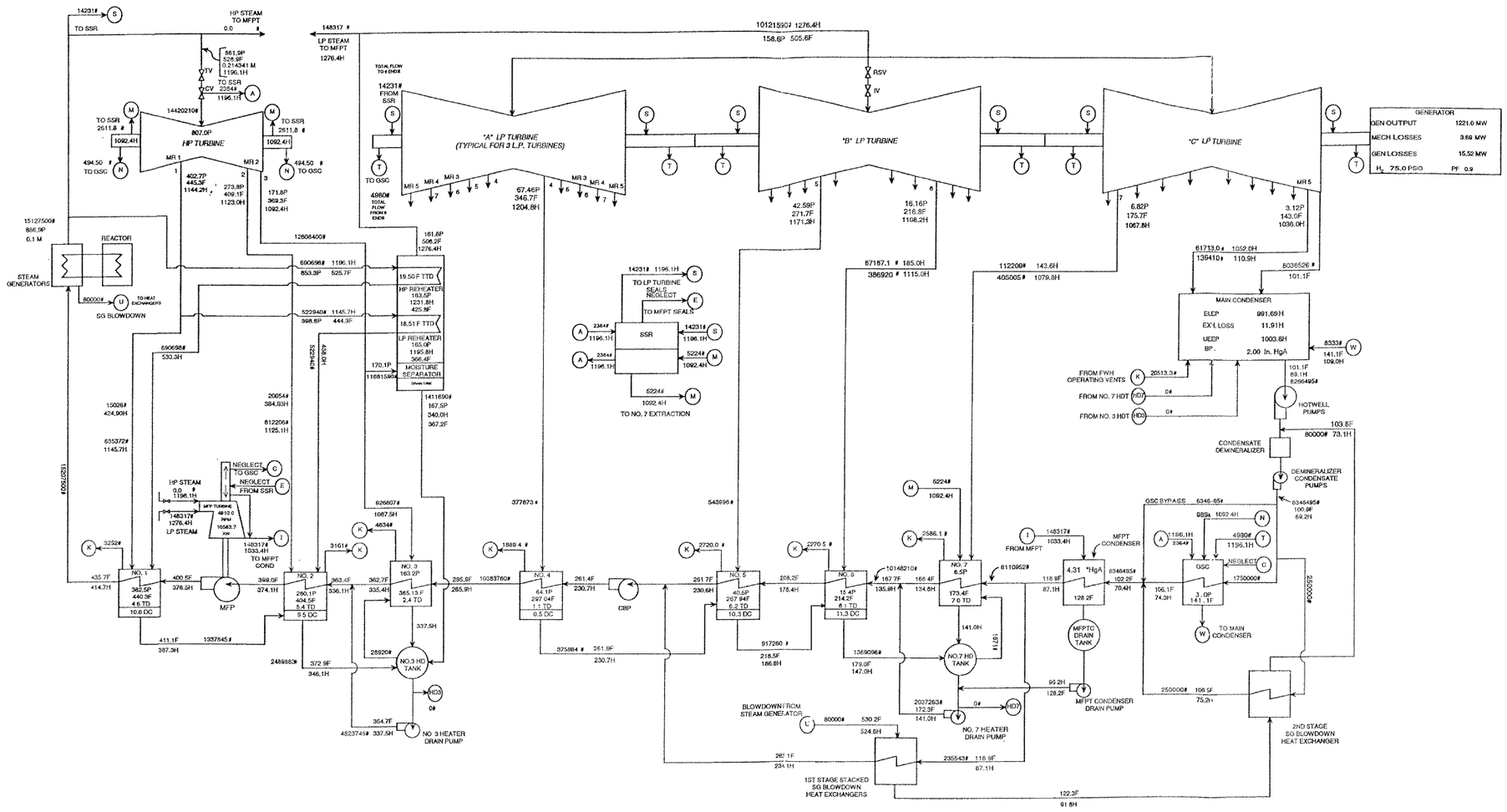

SEQUOYAH NUCLEAR PLANT
FINAL SAFETY
ANALYSIS REPORT

FIGURE 10.1-2
UNIT 1 HEAT BALANCE
100% MW THERMAL

(REVISED BY AMENDMENT 18)

CAD MAINTAINED DRAWING

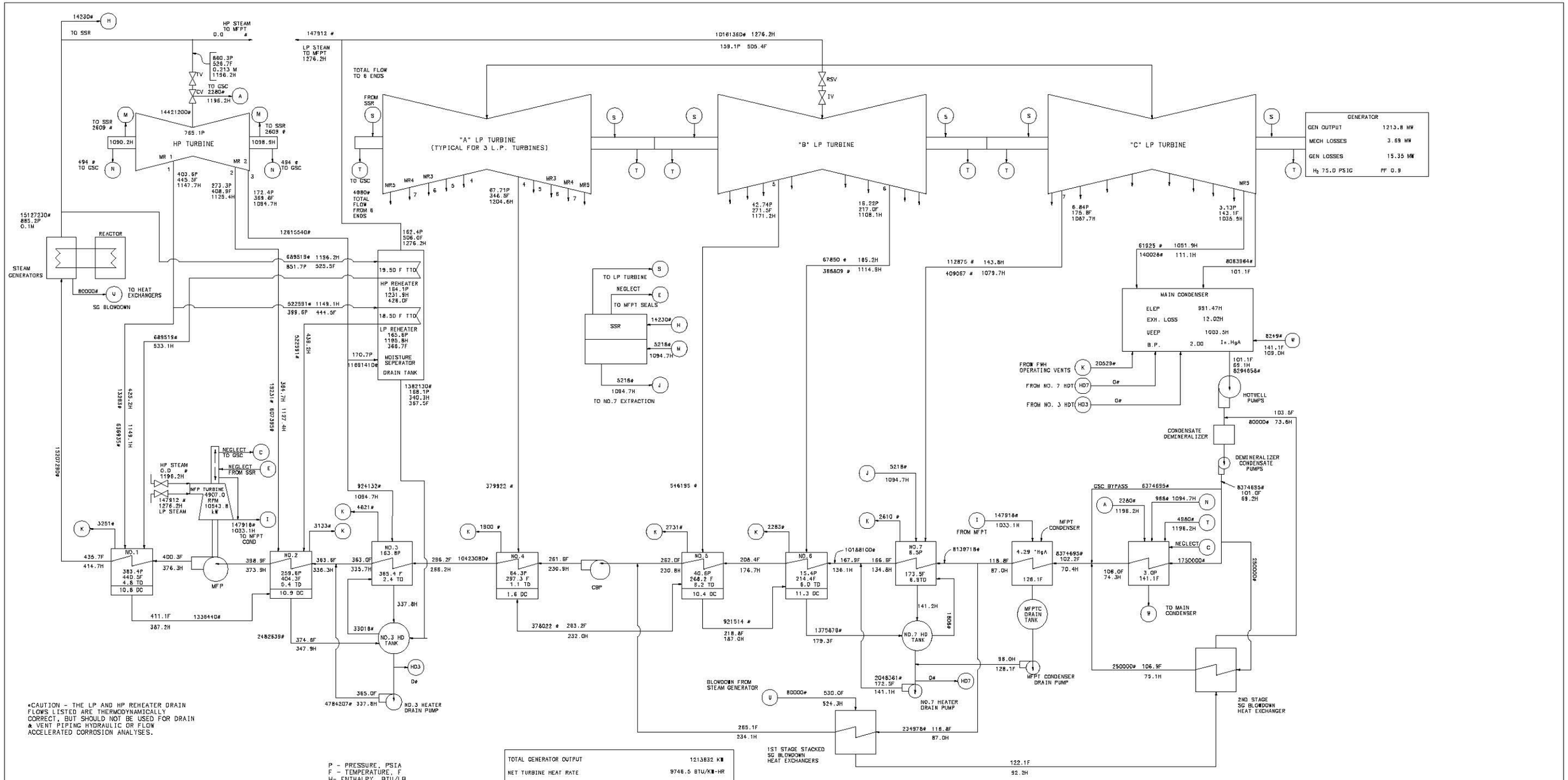

*CAUTION - THE LP AND HP REHEATER DRAIN FLOWS LISTED ARE THERMODYNAMICALLY CORRECT, BUT SHOULD NOT BE USED FOR DRAIN & VENT PIPING HYDRAULIC OR FLOW ACCELERATED CORROSION ANALYSES.

P - PRESSURE, PSIA
F - TEMPERATURE, F
H- ENTHALPY, BTU/LB
- FLOW, LB/HR
M - PERCENT MOISTURE
MR - MOISTURE REMOVAL

TOTAL GENERATOR OUTPUT	1213832 KW
NET TURBINE HEAT RATE	9746.5 BTU/KW-HR
NET PLANT OUTPUT	1177417KW
NET PLANT HEAT RATE	10048.0BTU/KW-HR
REACTOR OUTPUT (MWT TO TURB CYCLE)	3467.2MW THERMAL

SEQUOYAH NUCLEAR PLANT
FINAL SAFETY
ANALYSIS REPORT

FIGURE 10.1-3
UNIT 2 HEAT BALANCE
100% MW THERMAL

(REVISED BY AMENDMENT 24)

CAD MAINTAINED DRAWING

10.2 TURBINE GENERATOR

10.2.1 Design Basis

The purpose of the turbine generator is to use steam supplied by the PWR System in the conversion of thermal energy to electrical energy, and to provide extraction steam for feedwater heating. The turbine generator together with its associated systems and their control characteristics are integrated with the features of the reactor and its associated systems to obtain an efficient and safe energy conversion and power generation unit.

The turbine receives steam from the four steam generators and converts the thermal energy to electric energy. The Unit 1 heat balance indicates that the generator produces 1,221,000 kW when the turbine passes 14,420,210 lb/h of steam at throttle conditions of 861.9 lb/in^{2}a, 0.21 percent moisture, and at back pressure of 2.0 inches of Hg absolute (Figure 10.1-2). The Unit 2 heat balance indicates the generator produces 1,213,800 kW when the turbine passes 14,421,200 lb/hr of steam at throttle conditions of 860.3 lb/in^{2}a, 0.21 percent moisture, and at a back pressure of 2.0 inches of Hg absolute (Figure 10.1-3). Under emergency conditions the Turbine Protection System provides the necessary protection for the turbine-generator equipment.

It is intended that the units will be utilized primarily as base loaded units.

The functional limitation on the turbine imposed by the Nuclear Steam Supply System (NSSS) is that the NSSS accepts step load changes of ± 10 percent and ramp load changes of ± 5 percent per minute over the range of 15 percent to 100 percent. Manual control is required below 15 percent load.

10.2.2 Description

The turbine generator unit consists of the following components: turbine, generator, exciter, controls, and required support subsystems. (The turbine is a tandem compound double-stage reheat unit with 44-inch last-stage blades.) It consists of double-flow high-pressure turbine and three double-flow low-pressure turbines with extraction nozzles arranged for seven stages of feedwater heating. Exhaust steam from the high-pressure unit passes through six moisture separator/reheaters before entering the low-pressure turbines. The moisture separator/reheaters are shell and tube-type heat exchangers containing a section of chevron vanes for moisture separation. The chevron-type vanes alter the steam velocity to reduce the moisture content of the steam through centrifugal separation of the moisture particles.

Heating steam enters the high- and low-pressure reheater U-tube bundles to provide two stages of reheat for the steam flowing from the chevron section.

The generator is a direct-connected, hydrogen-cooled, 3 phase, 60 Hz, 24,000 V, 1800 rev/min synchronous generator. The generator has a nameplate rating of 1,356,200 KVA at 0.9 power factor (PF) with 75 psig hydrogen pressure. The generator has a short circuit ratio of 0.60, designed with conductor cooling of the armature winding, and conductor coolant is demineralized water. The excitation system is rated at

5,500 kW and 525 V, and uses shaft-mounted solid-state electronic control devices for the establishment of generator field current. The devices are mounted internally in the exciter shaft so as to eliminate the necessity for sliprings.

The turbine utilizes a Westinghouse (Unit 2) or Siemens (Unit 1) designed Electrohydraulic Control (EHC) System for control of both speed and load. The EHC System, composed of solid-state electronic devices coupled through suitable electrohydraulic transducers to a high-pressure hydraulic fluid system, provides control of the main stop, governing, intercept, and reheat stop valves of the turbine. Emergency speed protection is provided by an electrical overspeed governor, backed up by mechanical (Unit 2 only) and electrical overspeed trip mechanisms.

The reactor controls enable the nuclear steam supply system to follow plant (turbogenerator) load changes automatically, including the acceptance of step load increases or decreases of 10 percent and ramp increases or decreases of 5 percent per minute within the load range of 15 percent of 100 percent without reactor trip or steam dump. The difference between the highest measured average reactor coolant loop temperature and the programmed reference temperature (based on turbine impulse chamber pressure) which is processed through a lead-lag compensation unit, contained within the DCS, constitutes the primary control signal for the reactor control system. An additional control input signal to the reactor is derived from the reactor power versus turbine load mismatch signal. These signals provide input to the rod control system to control the reactor coolant temperature by regulation of the control rod bank position.

The turbine generator is also protected by the Turbine Protection System which will automatically trip the turbine on evidence of low condenser vacuum, abnormal thrust bearing wear, or low bearing oil pressure. The turbine can be tripped manually if subjected to excessive shaft vibration. The turbine trip system is also equipped with solenoid-operated trip devices, which provide means to initiate direct tripping of the turbine upon receipt of appropriate electrical signals. The turbine will also be tripped manually on detection of high temperature or pressure differences between condenser shells, high back pressure on the main condenser, high journal or thrust bearing metal temperature, high bearing oil discharge temperatures, and high differential expansion. When a turbine trip is initiated, the extraction system nonreturn valves are tripped closed either by means of a pilot dump valve connected to the turbine trip system, on electrical trip signal generated by the turbine trip, or by both of these means. Turbine governor functions and turbine control are discussed under Control Systems Not Required for Safety, Section 7.7. For overpressure protection of the turbine exhaust hoods and the condenser, four rupture diaphragms which rupture at approximately 5 lb/in^2g are provided on each turbine exhaust hood. Additional protective devices include exhaust hood high temperature alarm.

Any influence of the turbine controls on the RC System is controlled by the RC System. Analyses of the most severe of these influences are given in Chapter 15.

10.2.3 Turbine Missiles

An evaluation of the turbine missile threat to essential safety-related equipment and structures at the Sequoyah Nuclear Plant is provided. The potential turbine missile sources and turbine missile characteristics are identified. Following this is a statement defining the turbine missile protection criterion adopted for Sequoyah. Essential safety-related equipment and structures of the plant are identified. An evaluation of the turbine missile hazard to these essential safety-related equipment and structures is then provided.

10.2.3.1 Potential Missile Sources and Missile Characteristics

The missile containing ability of Westinghouse steam turbines was evaluated by Westinghouse by performing various tests and analyses.

Some of these tests involved spinning alloy steel discs to failure within various carbon steel housings. The discs were notched to ensure failure in a given number of segments at the desired speed. Test results were correlated with various parameters descriptive of the missile momentum and energy and the geometry of the missile and housing.

The housings were of varying geometry but mainly were axisymmetric and concentric with the rotation axis of the disc. They ranged in complexity from a circular cylinder to containments which approximated actual turbine construction.

From these tests, logical criteria were evolved for predicting the missile containing ability of various turbine structures. In addition, the tests also served to determine the mode of failure which certain structural shapes common to turbine construction undergo when impacted by a missile. This is important since the mode of failure has a great influence on the amount of energy absorbed by the housing.

In 1979, a Westinghouse test program was initiated to develop guidelines for evaluating nonsymmetric impacts. Earlier tests had concentrated primarily on symmetric impacts whereas most disc collisions with the typical cylinder structure were of a nonsymmetrical type. Also in 1979, stress corrosion cracking was found in the keyway areas of several discs on low-pressure rotors being refurbished by Westinghouse. Consequently, in 1980 and 1981, Westinghouse reevaluated their turbine missile energies and probability analyses and developed a revised methodology to include the above failure mechanisms, the effects of an ultrasonic low-pressure turbine disc inspection and other miscellaneous changes resulting from the reevaluation. The results of Westinghouse's latest analyses are included in this section. These latest analyses were considered in conjunction with the original FSAR hazard analyses and the missile energies are such that no appreciable change in the strike probabilities will occur. Consequently, the original FSAR hazard analyses are still valid. References 3 and 4 present the methods used by Westinghouse to address their revised analysis for turbine missiles in 1981. This reflects upgrade to address stress corrosion cracking of rotor discs.

Criteria Considered in Selecting Number of Disc Segments

Disc fractures into 90°, 120°, and 180° segments were considered. Calculations show that the 90° fragments pose the greatest threat as external missiles.

A 120° segment has an initial translational kinetic energy greater than that of a 90° segment; however, it also has a greater rim periphery resulting in greater energy loss while penetrating the turbine casing.

This results in nearly equal kinetic energy of 90° and 120° segments leaving the turbine casing. However, since the 90° segments have the smaller impact areas they represent a more critical missile.

The initial translational kinetic energy of a half disc is equal to that of a quarter disc. Because of kinematic considerations, a half disc segment will always impact with the rotor after fracture. The 180° segment, due to its larger size, will subject the stationary parts to greater deformation. As a result the 180° segment will leave the turbine casing with lower energy than the 90° segment.

For the purpose of evaluating the missile containing ability of the turbine structure against the 90° segments, the shrunk on discs have been postulated to fail in four quarters.

Energy Considerations

Before failure, a disc has a total energy which is purely rotational of 1/2 (Iw^2), where I is the mass moment of inertia of the disc about its axis of rotation and w is the angular velocity of the turbine at the postulated failure speed. After failure the mass center of each fragment translates at a velocity of w_r, r being the distance from the rotation axis of the disc to the mass center of the fragment. In addition the fragment rotates about its center of mass with an angular velocity of w. The initial rotational energy of the disc is partitioned into both the translational and rotational kinetic energy of the fragments.

Test results and analytical considerations indicate that the translational kinetic energy of a fragment is of much greater importance than the rotational kinetic energy in predicting the ability of the fragment to penetrate the turbine casing. Rotational kinetic energy tends to be dissipated as a result of blade crashing and friction forces developed between the fragment surface and stationary parts.

These principles apply to fragments which would be generated by failure of either the high-pressure turbine rotor or the low pressure turbine discs.

High-Pressure Turbine

High-Pressure Turbine Construction and Design

The high-pressure turbine element is of a double-flow design, thus it is inherently thrust balanced. Steam from the four control valves enters at the center of the turbine element through four inlet pipes, two in the base and two in the cover. These pipes feed four double-flow nozzle chambers flexibly connected to the turbine casing. The steam leaving the nozzle chambers passes through inlet flow guide rings and flows through the reaction blading. The reaction blading is mounted in the blade rings which in turn are mounted in the turbine casing.

The high-pressure turbine rotor is made of NiCrMoV alloy steel. The specified minimum mechanical properties are as follows:

Tensile Strength, lb/in^2, min.	100,000
Yield Strength, lb/in^2, min. (0.2% offset)	80,000
Elongation in 2 inches, percent, min.	18
Reduction of Area, percent, min.	55
Impact Strength, Charpy V-Notch, ft-lb (min. at room temperature)	60
50% Fracture Appearance Transition Temperature °F, max.	0

Material Properties

Due to the very large margin between the high pressure, spindle-bursting speed and the maximum speed at which the steam can drive the unit with all the admission valves fully open and because the probability of failure due to fatigue or stress corrosion cracking is so small it is insignificant, the probability of spindle failure is practically zero. Therefore, no missile will be developed during turbine runaway.

The main body of the rotor (bladed) weighs approximately 132,500 lb. The approximate values of the transverse centerline diameter, the maximum diameter, and the main body length are 36, 67.3, and 138.5 inches, respectively.

The blade rings are made of stainless steel castings and the casing cover and base is made of carbon steel castings. The specified minimum mechanical properties are as follows:

Tensile Strength, lb/in^2, min.	100,000
Yield Strength, lb/in^2, min. (0.2 percent, min. for Unit 1)	80,000
Elongation in 2 inches, percent, min.	15
Reduction of Area, percent min.	40

The bend test specimen is required to be capable of being bent cold through an angle of 90° and around a pin 1 inch in diameter without cracking on the outside of the bent portion.

The approximate weights of the four blade rings, the casing cover, and the casing base are 65,000, 115,000, and 115,000 lbs, respectively.

The casing cover and base are tied together by means of more than 100 studs. The stud material is an alloy steel having the following mechanical properties:

	2-1/2 Inches and less	Over 2-1/2 to 4 inches	3.625 inches	Over 4 to 7 inches
Bolt Length, in		28 to 59	72.5	
Tensile Strength, lb/in^2, min.	125,000	115,000	135,000	110,000
Yield Strength, lb/in^2, min. (0.2% offset)	105,000	95,000	110,000	85,000
Elongation in 2 inches, percent, min.	16	16	14	16
Reduction of Area, percent, min.	50	50	32	45
Cross-sectional Area, in^2 (total for outer cylinder, approximate)		620	660	
Free-length Volume, in^3 (total for outer cylinder, approximate)		31,500	34,000	

The studs have lengths ranging from 28 to 59 inches and diameters ranging from 2.50 inches to 3.5 inches. The total stud cross-sectional area is approximately 620 in^2 and the total stud free-length volume is approximately 31,500 in^3.

Effects on High-Pressure Element of Turbine-Generator Unit Over-Speeding

The maximum speed at which the unit may run is 190 percent of rated speed. (Note that this is slightly more than the burst speed of 186 percent of rated speed used in the analysis.) At this

speed the highest stressed low-pressure turbine disc will fracture. Upon failure these low-pressure disc fragments will damage the turbine to the extent that additional overspeed will not be possible.

The minimum bursting speed of the high-pressure rotor, based minimum specified mechanical properties of the rotor material, is 270 percent of rated speed. The actual bursting speed is closer to 300 percent of rated speed.

Hence, the actual margin between the bursting speed and the maximum running speed is of the order of 110 percent of nominal. No failure of the high-pressure rotor is anticipated as a consequence of a unit runaway; and therefore, no missiles are expected to be generated.

Furthermore, Reference 6 reports that in addition to no expected missiles due to turbine overspeed, no high-pressure rotor missiles are expected to be generated for High Cycle or Low Cycle Fatigue. The purpose of this paper is to discuss technical reasons that nuclear HP rotors of integral construction do not need to be considered when assessing missile generation probability of nuclear turbines. This supports Guideline b (used to represent conditions at the Sequoyah Nuclear Plant) in Section 10.2.3.4, which states “the only source for missiles will be low-pressure turbines.”

Low-Pressure Turbine

Low-Pressure Turbine Construction and Design

The double-flow low-pressure turbine incorporates high efficiency blading, diffuser type exhaust and liberal exhaust hood design. The low-pressure turbine cylinder is fabricated from steel plate to provide uniform wall thickness thus reducing thermal distortion to a minimum. The entire outer casing is subjected to low temperature exhaust steam.

The temperature drop of the steam from its inlet to its exhaust from the last rotating blades is taken across three walls: an inner cylinder No. 1, a thermal shield, and an inner cylinder No. 2. This precludes a large temperature drop across any one wall, except the thermal shield which is not a structural element, thereby virtually eliminating thermal distortion. The fabricated inner cylinder No. 2, is supported by the outer casing at the horizontal centerline and is fixed transversely at the top and bottom and axially at the centerline of the steam inlets, thus allowing freedom of expansion independent of the outer casing. Inner cylinder No. 1 is, in turn, supported by inner cylinder No. 2, at the horizontal centerline and fixed transversely at the top and bottom and axially at the centerline of the steam inlets, thus allowing freedom of expansion independent of inner cylinder No. 2. Inner cylinder No. 1 is surrounded by the thermal shield. The steam leaving the last row of blades flows into the diffuser where the velocity energy is converted to pressure energy.

Material Properties

The outer cylinder and the two inner cylinders are fabricated mainly of ASTM 515-GR65 material. The minimum specified properties are as follows:

Tensile Strength, lb/in^2, min.	65,000
Yield Strength, lb/in^2, min.	35,000
Elongation in 8 inches, percent min.	19
Elongation in 2 inches, percent min.	23

The low-pressure rotors are made of NiCrMoV alloy steel. The specified minimum mechanical properties are as follows:

Tensile Strength, lb/in^2, min.	115,000
Yield Strength, lb/in^2, min. (0.2% offset)	100,000

Elongation in 2 inches, percent, min.	16
Reduction of Area, percent, min.	40
Impact Strength, Charpy V-Notch, ft-lb (min. at room temperature)	40
50% Fracture Appearance Transition Temperature, °F, max.	80

The shrunk-on discs are made of NiCrMoV alloy steel. There are ten discs shrunk on the shaft with five in each steam flow path. These discs experience different degrees of stress when in operation. Disc No. 2, starting from the transverse centerline, experiences the highest stress, while disc No. 5 experiences the lowest. The minimum specified mechanical properties for the discs are shown in Table 10.2.3-1. The actual specified mechanical properties for the discs, which are proprietary, were submitted to the NRC for Sequoyah Unit 1 by L. M. Mills' letter dated August 1, 1980 to A. Schwencer.

Effects on Low-Pressure Element of Turbine-Generator Unit Overspeeding

The bursting speed of each of the shrunk-on discs is calculated under the assumption that the disc will fail when the average tangential stress equals the maximum temperature corrected tensile strength of the disc material. (No disc cracks are assumed. The effects of stress corrosion cracking on the low-pressure elements are discussed later in this section.) Disc No. 2 is the most highly stressed disc with a calculated failure speed of 190 percent of rated speed. Upon failure of disc No. 2 (or any other disc), further acceleration of the unit is assumed to halt because of extensive internal damage to the turbine.

For the purpose of analysis, all discs were assumed to fail at 186 percent of rated speed which corresponds to the destructive overspeed provided by Westinghouse in their original analysis. As previously stated, using the original destructive overspeed has not invalidated the hazard analysis.

Calculated initial translational velocity and initial translational kinetic energies of disc quadrants leaving the turbine rotor based on disc fractures at 190 percent rated speed are as follows:

Disc No.	Weight (lb)	Velocity c.g. (ft/s)	Kinetic Energy (10^6ft-lb)
1	2700	1096	50.4
2	2965	1143	60.2
3	2775	1071	49.4
4	3210	1072	57.3
5	3710	927	49.5

Summary of Individual Disc Results at Destructive Overspeed (190 Percent of Rated Speed) - Based on Westinghouse's Reanalysis

Disc No. 1

Disc No. 1 is assumed to fail at 190 percent of rated speed. At this speed the kinetic energy of a disc quadrant is 50.4 x 10^6 ft-lb. The initial collision of the quadrant of disc No. 1 is with the

concentric blade ring. Secondary collisions with inner cylinder No. 1, inner cylinder No. 2, and the outer cylinder also occur. As a result, four external missiles are generated by the failure of disc No. 1. One missile, the disc quadrant, has an energy of 0.52 x 10^6 ft-lb. The other missiles, blade ring and cylinder fragments, have energies of 0.66 x 10^6 ft-lb, 0.43 x 10^6 ft-lb, and 0.37 x 10^6 ft-lb respectively.

Disc No. 2

Disc No. 2 is calculated to fail at 190 percent of rated speed. The initial kinetic energy of a quadrant of disc No. 2 is 60.2 x 10^6 ft-lb.

An initial collision occurs between the disc No. 2 quadrants and the concentric blade ring. Secondary collisions also occur between the disc and blade ring fragments and inner cylinders No. 1, No. 2, and the outer cylinder. As a result, three external missiles are generated. The largest missile, the disc fragment, has an energy of 8.82 x 10^6 ft-lb. The other missiles (blade ring and cylinder fragments), have energies of 8.61 x 10^6 ft-lb, and 0.47 x 10^6 ft-lb, respectively.

Disc No. 3

Disc No. 3 is assumed to fail at 190 percent of rated speed. A quadrant of disc No. 3 has an initial kinetic energy of 49.4 x 10^6 ft-lb. The center plane of disc No. 3 is located axially between two concentric blade rings. The result is that fragments of disc No. 3 do not enter into a square collision with either blade ring. Consequently, as tests indicate, there is a high probability that the disc fragments in following the path of least resistance, will merely wedge between the rings pushing them aside with relatively little loss in translational kinetic energy. There will be subsequent collisions with and perforations of inner cylinder No. 2, and the outer cylinder. The calculated ejection energy for a quadrant of disc No. 3, is 15.35 x 10^6 ft-lb. Two other external missile fragments are also generated with energies of 5.92 x 10^6 ft-lb and 6.08 x 10^6 ft-lb, respectively.

Disc No. 4

Disc No. 4 is assumed to fail at 190 percent of rated speed. The initial kinetic energy of a quadrant of disc No. 4 is 57.3 x 10^6 ft-lb. The initial collision occurs between fragments of disc No. 4 and the surrounding blade rings and supporting structure. Inner cylinder No. 2 is perforated, and subsequent collision with and perforation of the outer cylinder occurs. As a result, quadrants of disc No. 4 are ejected with a kinetic energy of 30.17 x 10^6 ft-lb. Two other external missile fragments are also generated with energies of 4.51 x 10^6 ft-lb and 5.70 x 10^6 ft-lb, respectively.

Disc No. 5

Disc No. 5 is assumed to fail at 190 percent of rated speed (blades are lost prior to reaching 190 percent of rated speed). A quadrant of disc No. 5 has a kinetic energy of 49.5 x 10^6 ft-lb. The initial collision occurs between the disc fragments and the diffuser ring and adjacent blade ring. As a result, disc No. 5 is ejected through the end section of the outer cylinder with a translational kinetic energy of 32.59 x 10^6 ft-lb. Two other external missile fragments are also generated with energies of 2.99 x 10^6 ft-lb and 2.54 x 10^6 ft-lb respectively.

Table 10.2.3-2 tabulates the exit missile properties for all discs at 186 percent of rated speed which was the failure speed originally calculated by Westinghouse. These data were used in the original hazards analysis. Table 10.2.3-3 tabulates the exit missile properties as calculated by Westinghouse during their reanalysis for all discs at 100 percent and 120 percent of rated speed, in addition to summarizing the information provided above for 190 percent of rated speed (destructive overspeed). The disc failures at 100 percent and 120 percent of rated speed would be similar to those described for the 190 percent speed except for considerably lower missile energies and different representative postulated fragments as indicated in Table 10.2.3-3. As previously noted, the slight increase in destructive overspeed does not invalidate the original hazards analysis.

Effects on Low-Pressure Element Due to Stress Corrosion Cracking

Prior to 1980, the Westinghouse missile probabilities and energies analyses were directed primarily at missile generation due to destructive overspeed. Fatigue of the rotating elements due to speed cycling was also considered as a missile generation mechanism in these earlier analyses. These earlier Westinghouse analyses indicated that the probabilities of missile generation due to fatigue and destructive overspeed were very low in comparison to the probability estimated by Bush. The Bush probability (1×10^{-4} missile producing disintegrations per turbine operating year) was chosen for the original Sequoyah missile hazard evaluation in order to provide a very liberal margin of safety.

When stress corrosion cracks were discovered in some of the Westinghouse low-pressure turbine rotor discs keyways and bores in late 1979 and early 1980, new Westinghouse analyses which were concerned primarily with the probabilities of low-pressure disc failure and missile generation due to stress corrosion cracking (SCC) were developed to reflect this newly discovered and relevant missile producing mechanism. The results of the missile energies portion of the new Westinghouse analyses are shown in Tables 10.2.3-3 and 10.2.3-4, and Figures 10.2.3-1 and 10.2.3-2. These new Westinghouse analyses also reevaluated the missile generation probabilities for fatigue of the rotating low-pressure turbine rotor discs. These new fatigue missile generation probabilities are six to seven orders of magnitude lower than the maximum allowable turbine missile generation probability and thus are insignificant. The probabilities of disc failure and missile generation due to destructive overspeed are not affected by these new analyses, and thus remain the same as stated in the earlier Westinghouse analyses. (Several orders of magnitude lower than the maximum allowable turbine missile generation probability.) The probability of missile generation due to SCC at design overspeed conditions (120 percent of rated speed) is two orders of magnitude lower than the probability of missile generation due to SCC at rated speed. Consequently, the probability of missile generation at Sequoyah (due to all failure mechanisms) is, for analysis purposes, approximately equal to the probability of missile generation due to SCC at rated speed. Thus, the following discussion will be mostly concerned with the probability of missile generation due to SCC at rated speed.

The probability of a missile generation from stress corrosion of a low-pressure turbine rotor disc is a function of the disc inspection interval, the disc critical crack size, the disc maximum crack growth rate, the maximum crack sizes present initially (if any), and the ability of the turbine's cylinders and casings to contain the ruptured disc and associated fragments. Initially, the disc characteristics and properties such as the location and size of any cracks, the material toughness, the tangential bore stress, the normal operating temperature of the disc, the disc

yield strength, and other similar parameters are known. With this given information and that in Table 10.2.3-3, and the methodologies used in the latest Westinghouse analyses, critical crack sizes, the maximum growth rates, and a matrix of missile generation probabilities verses inspection intervals (based on turbine operating time) can be calculated for each disc. Westinghouse methodologies used in their latest reanalyses are documented in Topical Report WSTG-1-NP "Procedures for Estimating the Probability of Steam Turbine Disc Rupture from Stress Corrosion Cracking", May 1981, and Topical Report WSTG-2-NP "Missile Energy Analysis Methods for Nuclear Steam Turbines," May 1981. As an alternate to the above probabilistic approach for turbine missile analysis and the effects of SCC, the NRC has developed a deterministic approach which utilizes fracture mechanics, material properties, turbine operating history, etc., to determine critical crack sizes, maximum crack growth rates, and other suitable information which are used to establish low pressure nuclear turbine rotor disc inspection intervals. This deterministic approach for low pressure turbine disc inspection intervals will be used for Sequoyah. Note that both of the above approaches will provide approximately the same level of protection (or risk) with regard to turbine disc missile generation.

Prior to exceeding 5 percent power on Sequoyah Unit 1, a preservice (baseline) ultrasonic (and visual) inspection of the low-pressure turbine discs (and rotors) was performed at the request of the NRC to verify that there were not any significant cracks in these components. No significant cracks were found. The test results for this inspection were reviewed and accepted by the NRC. No preservice inspection was required or necessary for Sequoyah Unit 2.

Also at the request of the NRC, an ultrasonic (and visual) inspection of the low-pressure turbine discs (and rotors) were performed prior to startup following the second refueling outage on Sequoyah Unit 1. The results of these inspections and new inspection intervals, were provided to the NRC for their review.

Missile Impact Areas and Dimensions

Figure 10.2.3-3 shows the overall width and projected impact areas of a disc quadrant. The following dimensions and areas for each of the five disc quadrants were used in the hazards analysis:

Disc No.	1	2	3	4	5
A_1, ft^2	4.9	4.2	2.0	2.4	3.0
A_2, ft^2	2.31	2.04	1.74	1.96	2.45
A_3, ft^2	3.7	3.4	3.3	3.6	4.1
W, ft	6.1	6.0	6.0	5.8	5.2
L, ft	2.6	2.7	2.8	2.7	2.3

A_1: Disc rim projected impact area

A_2: Disc end projected impact area

A_3: Disc hub projected impact area

W: Maximum dimension of disc quadrant
L: Radial dimension of disc quadrant

Figure 10.2.3-1 shows the overall width and projected impact areas of a disc quadrant from the latest Westinghouse analysis. The dimensions and areas for each of the five disc quadrants are as follows:

Disc No.	1	2	3	4	5
A_1, ft^2	4.94	4.28	2.03	2.45	3.10
A_2, ft^2	2.40	2.23	1.77	2.03	2.60
A_3, ft^2	3.33	3.09	3.09	3.33	4.00
A_4, ft^2	1.27	1.26	1.28	1.46	1.89
W, ft	6.08	6.08	6.08	5.88	5.32
L, ft	2.64	2.72	2.80	2.74	2.43

A_1: Disc rim projected impact area

A_2: Disc end projected impact area

A_3: Disc hub projected impact area

A_4: Disc end impact area

W: Maximum dimension of disc quadrant
L: Radial dimension of disc quadrant

Table 10.2.3-4 and Figure 10.2.3-2 show the overall dimensions and shapes of the blade ring and cylinder fragments. (This information was also provided with Westinghouse's latest analysis).

Ejection Angles of Disc Quadrants (and Missile Fragments)

Based on test results, we calculate the ejection angles for disc quadrants leaving the turbine casing are calculated to be as follows:

1. Disc Nos. 1, 2, 3, and 4; ± 5° measured from the vertical radial plane passing through the disc.

2. Disc No. 5; 5° to 25° measured from the vertical radial plane passing through the disc. The disc quadrant will eject only towards the adjacent coupling on the rotor shaft. However, for conservatism in the analysis, the end disc was assumed to be ejected with an equal probability from 0° to 25° measured from the vertical radial plane.

10.2.3.2 Turbine Missile Protection Criterion

The turbine missile protection criterion adopted for the Sequoyah Nuclear Plant is based upon the recommendations given in Reference 1 and NRC inspection criteria for low pressure turbine rotor discs. The interpretation made for Sequoyah is that the possibility of unacceptable damage to safety-related equipment and structures should not be significant. A significant threat is considered to be one having a probability of unacceptable damage to safety-related equipment and structures greater than 1×10^{-7} per turbine per year or 2×10^{-7} per 2-unit plant per year. (These probabilities should not change appreciably when the new NRC inspection criteria discussed in the "Effects on Low-Pressure Element Due to Stress Corrosion Cracking" portion of FSAR section 10.2.3.1 is utilized). Equipment and structures considered essential for the preservation of safety are those needed to bring the reactor to and keep it in a cold shutdown state and/or those needed to keep the site boundary accident dosages at/or below limits specified in 10 CFR 100.

10.2.3.3 Essential Safety-Related Equipment and Structures

Six equipment installations and structures were considered essential for the preservation of safety following a missile producing turbine disintegration. Included in this listing are:

a. Unit 1 reactor containment
b. Unit 2 reactor containment
c. Main control room
d. Spent fuel pit
e. Diesel generator building
f. Intake structure

The location of these items within the plant and their relationship to the potential turbine missile sources are shown in Figure 10.2.3-4.

10.2.3.4 Turbine Missile Hazard Evaluation

The expression used to evaluate the turbine missile hazard contains four probability components and a factor accounting for the scope of the source of missiles. This is written as:

$$Pr(E) = nPr(A)Pr(B)Pr(C)Pr(D)$$

Where: n = The number of turbine generator units at the plant. At the Sequoyah Nuclear Plant n = 2.

Pr(A) = The probability of event A occurring per turbine operating year. Event A is defined as a missile producing turbine disintegration (penetration of outer turbine casings).

Pr(B) = The probability of event B occurring per turbine disintegration (missile generation). Event B is the production of a particular type of missile. In these analyses, two types of missiles are considered center-disc missiles (disc Nos. 1, 2, 3, and 4) and end disc missiles (disc No. 5).

Pr(C) = The probability of event C occurring per turbine disintegration (missile generation) producing the particular type of missiles considered in event B. Event C is defined as a turbine missile strike upon any safety-related equipment or structure.

Pr(D)	=	The probability of event D occurring per turbine missile strike upon safety-related equipment or structure. Event D is defined as the impairment or destruction of the equipment or structure.
Pr(E)	=	The probability of event E occurring per turbine operating year. Event E is defined as the infliction of unacceptable damage from a turbine missile.

Several guidelines were employed to make this expression represent conditions at the Sequoyah Nuclear Plant. A listing of these includes:

a. The probability of missile generation (missile penetrates and leaves the outer turbine casing), Pr(A), will be 1×10^{-4}/yr. Such a probability rate, as stated in Reference 1, is a very conservative upper bound limit based on current experience of 70,000 turbine years under actual operating conditions.

b. The only source for missiles will be the low-pressure turbines. In this instance, there are three low-pressure turbines in each of the two turbine generator units. Consequently, there are just six different locations from which missiles could originate. The center of low-pressure turbine was assumed to be the point of origin for missiles.

c. Only one turbine disc from one low-pressure turbine will disintegrate in a turbine accident producing missiles.

d. In the event of a missile producing turbine disintegration, the probability of a center disc rupture is assumed to be 1.0 (thus Pr(B) = 1.0) and the probability of an end disc rupture is assumed to be 0.5 (therefore , Pr(B) = 0.5 in this instance). Such values were assumed to assure conservatism.

e. Quarter-disc missiles from each missile producing turbine disintegration event were assumed.

f. The turbine missile masses and turbine casing exit velocities assumed are those specified in Table 10.2.3-2 for 186 percent of rated speed. These may be compared with the masses and energies for 190 percent presented in Table 10.2.3-3 which were produced by the Westinghouse reanalysis and are due to different failure assumptions (see Effects on Low-Pressure Element of Turbine-Generator Unit Overspeeding). Note that the energies vary greatly among the two cases. However, since disc No. 2 is calculated to fail first during a destructive overspeed event, this disc is used to represent the properties of all center discs. With this consideration, it may be seen that the values assumed in the analysis (Table 10.2.3-2) are considerably higher than those recently reported by Westinghouse.

g. Center-disc missiles were assumed to be deflected ± 5° during the turbine casing penetration process.

h. End disc missiles were assumed to be deflected from 0° to 25° during the turbine casing penetration process. This is conservative with respect to the new Westinghouse analysis which calculated deflections in the 5° to 25° range. In addition, the energy assumed in the

analysis is lower than that reported in the Westinghouse analysis for end discs (see disc No. 5 in Tables 10.2.3-2 and 10.2.3-3). However this difference is offset by the deflection angle range and the significantly larger center disc missile energies used in the analysis. There are four center discs for each end disc.

i. All strikes upon equipment installations or structures essential for the preservation of safety were assumed to eliminate that particular safety function. Under such an interpretation, Pr(D) = 1.0. This is true for rated and overspeed conditions. For conditions at less than rated speed Pr(D) = 0.5.

Strike probabilities upon essential safety-related equipment and structures were calculated by the conservative methodology described in Reference 2. Both three- and two-dimensional analyses were conducted.

The three-dimensional analysis of the strike probability is an investigation to determine the probability that a missile will emerge from a turbine casing with a velocity vector directed toward the essential safety-related items. Three of the six safety-related items listed in Paragraph 10.2.3.3 were considered to be vulnerable to this kind of impact.

These were the main control room and the two reactor containment structures. The results obtained indicated that no missiles can emerge from any of the low-pressure turbines at sufficiently low trajectory elevation angles to strike these structures. Such findings indicate that there is no hazard to these three essential structures from missiles on their upward portion of their trajectory.

The two-dimensional analysis of the strike probability is an investigation to determine the probability of a turbine missile striking any of the essential safety-related items identified in Paragraph 10.2.3.3 during the downward part of the trajectory. In the analyses conducted, both center-disc and end-disc missiles were considered. The results indicated that missiles from low-pressure turbine, low-pressure 2A, constituted the greatest threat. A strike probability for center- disc missiles from low-pressure 2A was found to be 4.5×10^{-4} per turbine disintegration and a strike probability for end-disc missiles from this turbine was found to be 9.3×10^{-4} per turbine disintegration. Additional details on these strike probabilities are shown in Table 10.2.3-5.

A summary of the factors appearing in the unacceptable damage probability equation for the two kinds of missiles that could originate at turbine low-pressure 2A are as follows:

<u>Center-Disc Missiles</u>

n = 2 turbine generator sets/plant

Pr(A) = 1×10^{-4} missile producing disintegrations/turbine year
Pr(B) = 1.0 center-disc missiles/missile producing disintegration
Pr(C) = 4.5×10^{-4} strikes on safety-related items/center-disc missile
Pr(D) = 1.0 unacceptable disablements/missile strike

<u>End-Disc Missile</u>

n = 2 turbine generator sets/plant

Pr(A) = 1×10^{-4} missile producing disintegrations/turbine year
Pr(B) = 0.5 end disc missiles/missile producing disintegration
Pr(C) = 9.3×10^{-4} strikes on safety-related items/end disc missile
Pr(D) = 1.0 unacceptable disablements/missile strike

The product of the related factors show that the probability of unacceptable damage to essential safety-related equipment or structures is 9.0×10^{-8}/turbine year for center-disc missiles and 9.3×10^{-8}/turbine year for end-disc missiles. In each instance, these conservatively determined probabilities are below the acceptable risk threshold of 1×10^{-7}/turbine/year per unit specified in Reference 1. It is, therefore, concluded that the hazard from turbine missiles at the Sequoyah Nuclear Plant is not significant. It should be noted that a hazards probability reanalysis was not performed upon submittal of the Westinghouse SCC work, the changes in missile energies are such that no appreciable change in the strike probabilities will occur. Further, there is considerable conservatism in the assumptions used in the analysis, which are listed above.

10.2.4 Evaluation

The following operational transients can occur, caused by operation of turbine, generator, or distribution system protection equipment.

a. Turbine trip due to turbine abnormalities.
b. Turbine trip due to generator abnormalities.
c. Transients due to rapid load changes or system abnormalities.

The analysis of the consequences of the severest of these events with respect to reactor safety are discussed in Chapter 15, Accident Analysis.

There can be any number of component or system operational abnormalities that can be postulated to produce a turbogenerator load transient. However, since the effects of such abnormalities can be no worse than a turbine or generator trip, these occurrences are not formally listed.

Any noble gas activity in the secondary system as well as the particulate activity present due to moisture carryover from the steam generators enters the high-pressure turbine. The subsequent activity entering the low-pressure turbine is reduced due to the moisture separation that occurs between the exit of the high-pressure turbine and the entrance to the low-pressure turbines. Activity levels in the turbine are expected to be low and the shielding is provided by the piping, turbine casing, and other components. If any additional shielding is required in local areas, it will be provided so that unlimited access to the turbine area is possible. Details of the shielding design are discussed in Section 12.1.

Radiation protection measures for the Steam and Power Conversion System are based on a maximum total primary-to-secondary leakage of 1 gal/min and 1 percent failed fuel. On that basis, all components of the system are considered access areas with maximum dose rates to an individual of less than 1 mr/hr. Because of (1) the very low probability of operation with a large primary-to-secondary leakage rate, (2) the low equipment contact doses, and (3) the absence of

equipment with which could accumulate significant amounts of radioactive material, TVA does not consider the steam and power conversion system or the turbine building to be a significant source of operator exposure.

10.2.5 References

1. Bush, S. H., "Probability of Damage to Nuclear Components Due to Turbine Failure," CONF-730304, Topical Meeting on Water-Reactor Safety, Salt Lake City, Utah, March 26-28, 1973, pp 84-104.

2. Semanderes, S. N., "Topical Report, Methods of Determining the Probability of a Turbine Missile Hitting a Particular Plant Region," WCAP-7861, February 1972.

3. Topical Report: Procedures for Estimating the Probability of Steam Turbine Disc Rupture from Stress Corrosion Cracking, submitted to the NRC May, 1981, by Westinghouse Steam Turbine Generator Division WSTG-1-NP.

4. Topical Report: Missile Energy Analysis Methods for Nuclear Steam Turbines, submitted to the NRC May, 1981, by Westinghouse Steam Turbine Generator Division WSTG-2-NP.

5. Memo from L. W. Boyd to C. A. Chandley dated September 27, 1988 transmitted copies of Turbine Missile reports as listed below:

   A. 1974 Analysis for Turbine Missiles

   B. CT-24076 SQN Methodology for Analyzing Turbine Missiles

   C. CT-24832 R1 Results of Turbine Missile Analysis for SQN U-1

   D. CT-24873 R0, Report of Turbine Missile Analysis for SQN U-2

   E. CT-24831 R1 Report of Turbine Missile Analysis for SQN U-1

6. Seimens-Westinghouse Report EC-02262, “Missile Generation Risk Assessment for Original and Retrofit Nuclear HP Rotors,” dated December 17, 2002.

TABLE 10.2.3-1

MINIMUM MECHANICAL PROPERTIES FOR LOW-PRESSURE TURBINE DISCS

	Disc 1	Disc 2	Disc 3-5
Tensile strength, min. lb/in^2	130,000	140,000	120,000
Yield strength, min. lb/in^2	120,000	130,000	110,000
Yield strength, max. lb/in^2	135,000	145,000	125,000
Elongation in 2 inches (disc hub) percent min.	14	13	15
Elongation in 2 inches (disc rim) percent min.	16	15	17
Reduction of area (disc hub) percent min.	35	35	38
Reduction of area (disc rim) percent min.	40	40	43
Impact strength (hub and rim) Charpy V-Notch ft-lb min. at room temp	50	50	50
50% Fracture appearance transition temp (disc hub and rim) °F max.	0	0	0

TABLE 10.2.3-2

SUMMARY OF CALCULATED RESULTS BASED ON
*FAILURE AT 186% OF RATED SPEED

Missile	Weight (lb)	Exit Velocity (ft/sec)	Exit Energy (10^6ft-lb)
Disc No. 1 quadrant	3790	505	15
No. 1 blade ring fragment	1210	516	5
Disc No. 2 quadrant	3750	642	24
No. 2 blade ring fragment	673	437	2
Disc No. 3 quadrant	2740	593	15
Disc No. 4 quadrant	3190	586	17
Disc No. 5 quadrant	3633	666	25

*Reference paragraph (f.) in Section 10.2.3.4.

TABLE 10.2.3-3 (Sheet 1)

EXIT MISSILE PROPERTIES FOR LOW-PRESSURE DISCS (AND FRAGMENTS) - ALL LOW PRESSURES
EXIT MISSILE PROPERTIES FOR NO. 2 LOW-PRESSURE DISC AND FRAGMENTS (LOW PRESSURE'S 1, 2, & 3)

		RATED SPEED (100% SPEED)		DESIGN OVERSPEED 120% SPEED		DESTRUCTIVE OVERSPEED 190% SPEED	
	WEIGHT (lb)	VELOCITY (ft/s)	ENERGY (10^6ft-lb)	VELOCITY (ft/s)	ENERGY (10^6ft-lb)	VELOCITY (ft/s)	ENERGY (10^6ft-lb)
90° DISC BURST							
DISC No. 1	2700	Contained		Contained		111	0.52
FRAGMENT No. 1.1	3470	Contained		Contained		111	0.66
FRAGMENT No. 1.2	2270	Contained		Contained		111	0.43
FRAGMENT No. 1.3	1920	Contained		Contained		111	0.37
90° DISC BURST							
DISC No. 2	2965	184	1.55	239	2.63	438	8.82
FRAGMENT No. 2.1	2895	184	1.52	239	2.57	438	8.61
FRAGMENT No. 2.2	545	*	*	124	0.13	-- --	-- --
FRAGMENT No. 2.3	130	-- --	-- --	-- --	-- --	481	0.47

*Exit missile energies of less than 100,000 ft-lb are not reported.

90° DISC BURST							
DISC No. 3	2775	166	1.19	292	3.67	597	15.35
FRAGMENT No. 3.1	1265	219	0.94	-- --	-- --	-- --	-- --
FRAGMENT No. 3.2	765	-- --	-- --	377	1.69	706	5.92
FRAGMENT No. 3.3	970	177	0.47	311	1.45	635	6.08

TABLE 10.2.3-3 (Sheet 2)

EXIT MISSILE PROPERTIES FOR LOW-PRESSURE DISCS (AND FRAGMENTS) - ALL LOW PRESSURES
EXIT MISSILE PROPERTIES FOR NO. 2 LOW-PRESSURE DISC AND FRAGMENTS (LOW PRESSURE'S 1, 2, & 3)

			RATED SPEED (100% SPEED)	DESIGN OVERSPEED 120% SPEED		DESTRUCTIVE OVERSPEED 190% SPEED	
	WEIGHT (lb)	VELOCITY (ft/s)	ENERGY (10^6ft-lb)	VELOCITY (ft/s)	ENERGY (10^6ft-lb)	VELOCITY (ft/s)	ENERGY (10^6ft-lb)
90° DISC BURST							
DISC No. 4	3210	369	6.78	460	10.54	778	30.17
FRAGMENT No. 4.1	480	369	1.01	460	1.58	778	4.51
FRAGMENT No. 4.2	2380	186	1.28	232	1.99	393	5.70
90° DISC BURST							
DISC No. 5	3980	408	10.29	499	15.35	-- --	-- --
DISC No. 5*	3710	-- --	-- --	-- --	-- --	752	32.59
FRAGMENT No. 5.1	340	408	0.89	499	1.31	752	2.99
FRAGMENT No. 5.2	1290	193	0.74	235	1.11	356	2.54

*Weight change due to loss of blades prior to reaching destructive overspeed.

TABLE 10.2.3-4

LOW-PRESSURE CYLINDER AND BLADE RING FRAGMENT DIMENSIONS

(REFER TO FIGURE 10.2.3-2)

FRAGMENT NUMBER	L (in) 90° SEGMENT	B (in)	H (in)	NOTES
1.1*	87.9	18.1	7.7	(c)
1.2	103.7	8.5	9.1	(c)
1.3	117.1	3.0	19.3	(c)
2.1	95.8	12.0	8.9	
2.2	36.7	9.5	5.5	(a,b)
2.2	---	9.5	5.5	
2.2	36.7	1.9	6.6	(c)
3.1	86.7	9.4	5.5	(a)
3.1	85.3	6.1	5.2	(b,c)
3.1	---	9.4	5.5	(b)
3.1	---	6.1	5.2	(c)
3.2	87.6	4.0	9.8	
4.1	81.8	4.5	4.6	
4.2	91.0	18.5	5.0	
5.1	73.2	2.5	6.6	
5.2	74.0	14.0	4.4	

*Except as indicated by the following notes, dimensions apply to 100% and 120% speed and destructive overspeed.

NOTES:
(a) Rated Speed (100% speed)
(b) Design Overspeed (120% speed)
(c) Destructive Overspeed (190% speed)

TABLE 10.2.3-5

STRIKE PROBABILITY DATA FOR MISSILES ORIGINATING

IN LOW-PRESSURE TURBINE LOW-PRESSURE 2A

Safety-Related Component or Structure	Center Disc Strike Probability Per Missile Producing Turbine Disintegration	End Disc Strike Probability Per Missile Producing Turbine Disintegration
No. 1 Reactor Containment	1.0×10^{-4}	3.7×10^{-5}
No. 2 Reactor Containment	1.2×10^{-4}	4.5×10^{-5}
Main Control Rm	7.2×10^{-5}	2.9×10^{-5}
Spent Fuel Pit	9.4×10^{-6}	4.3×10^{-6}
Diesel Generator Building	6.5×10^{-5}	2.7×10^{-5}
ERCW Intake Structure	8.5×10^{-5}	7.9×10^{-4}
All Safety-Related Components and Structures	4.5×10^{-4}	9.3×10^{-4}

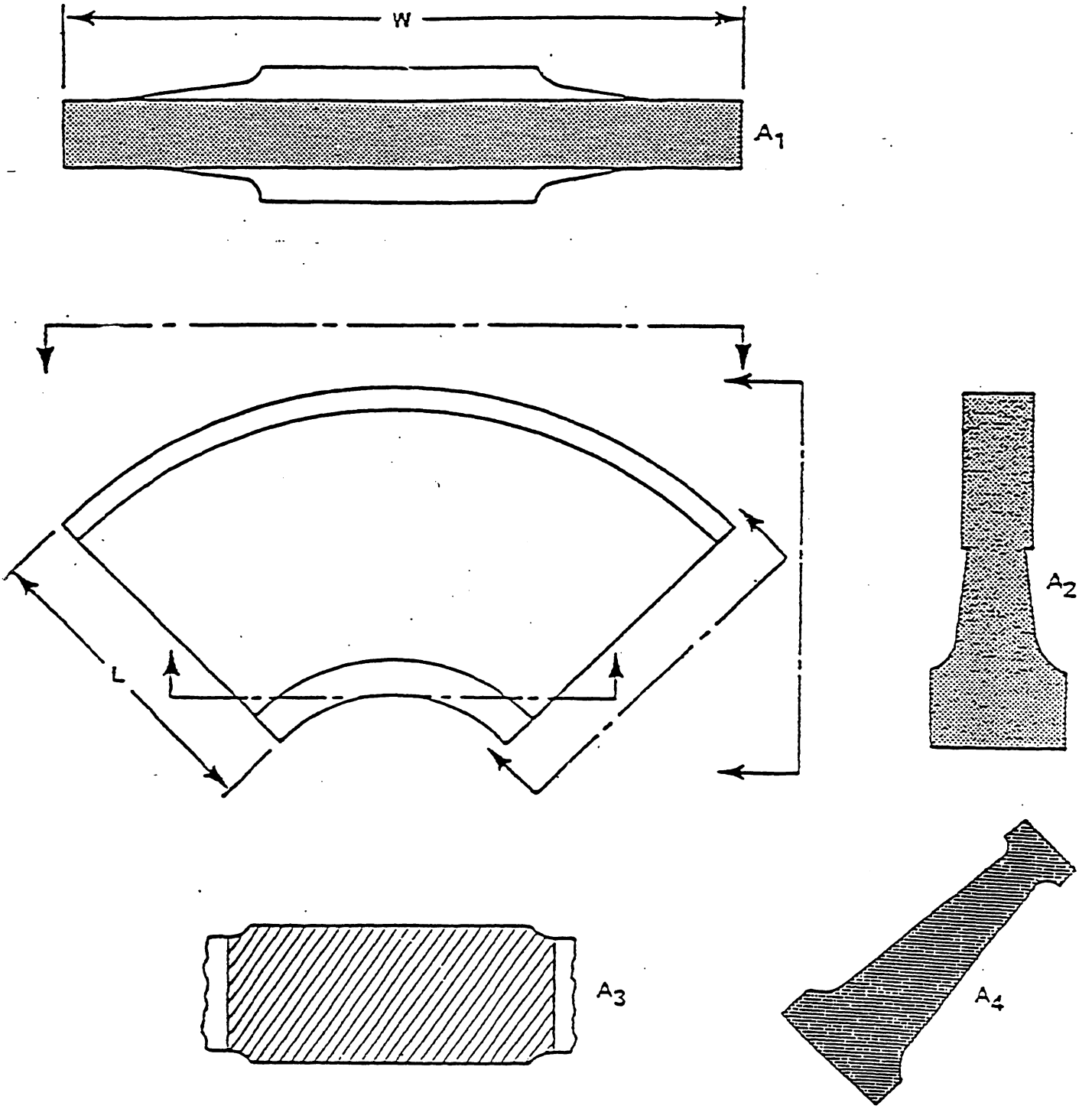

FIGURE 10.2.3-1 LP DISC MISSILES

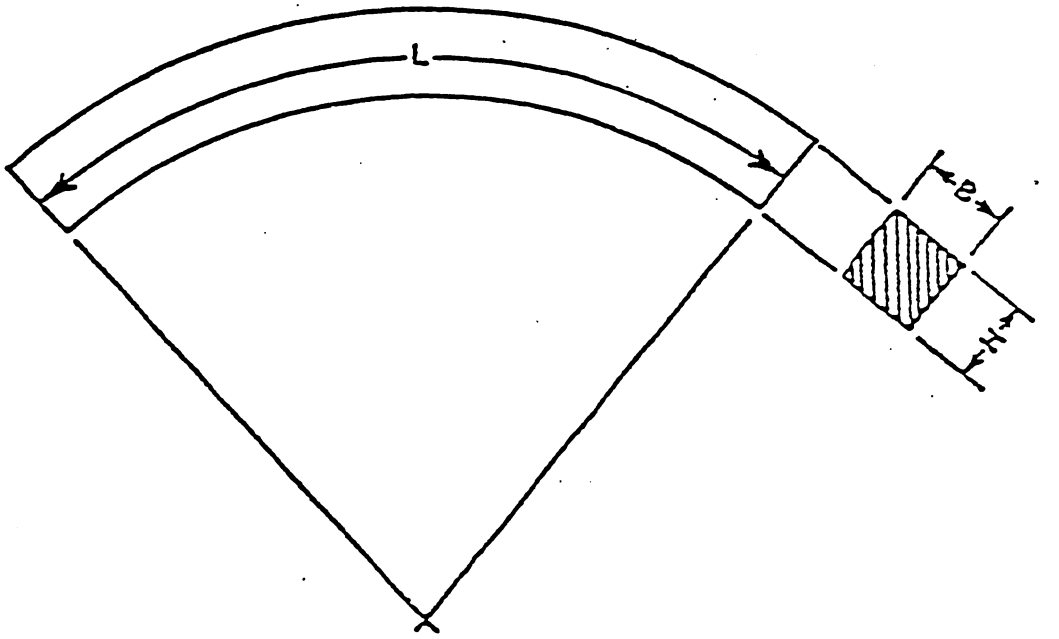

FIGURE 10.2.3-2 LP CYLINDER & BLADE RING FRAGMENTS

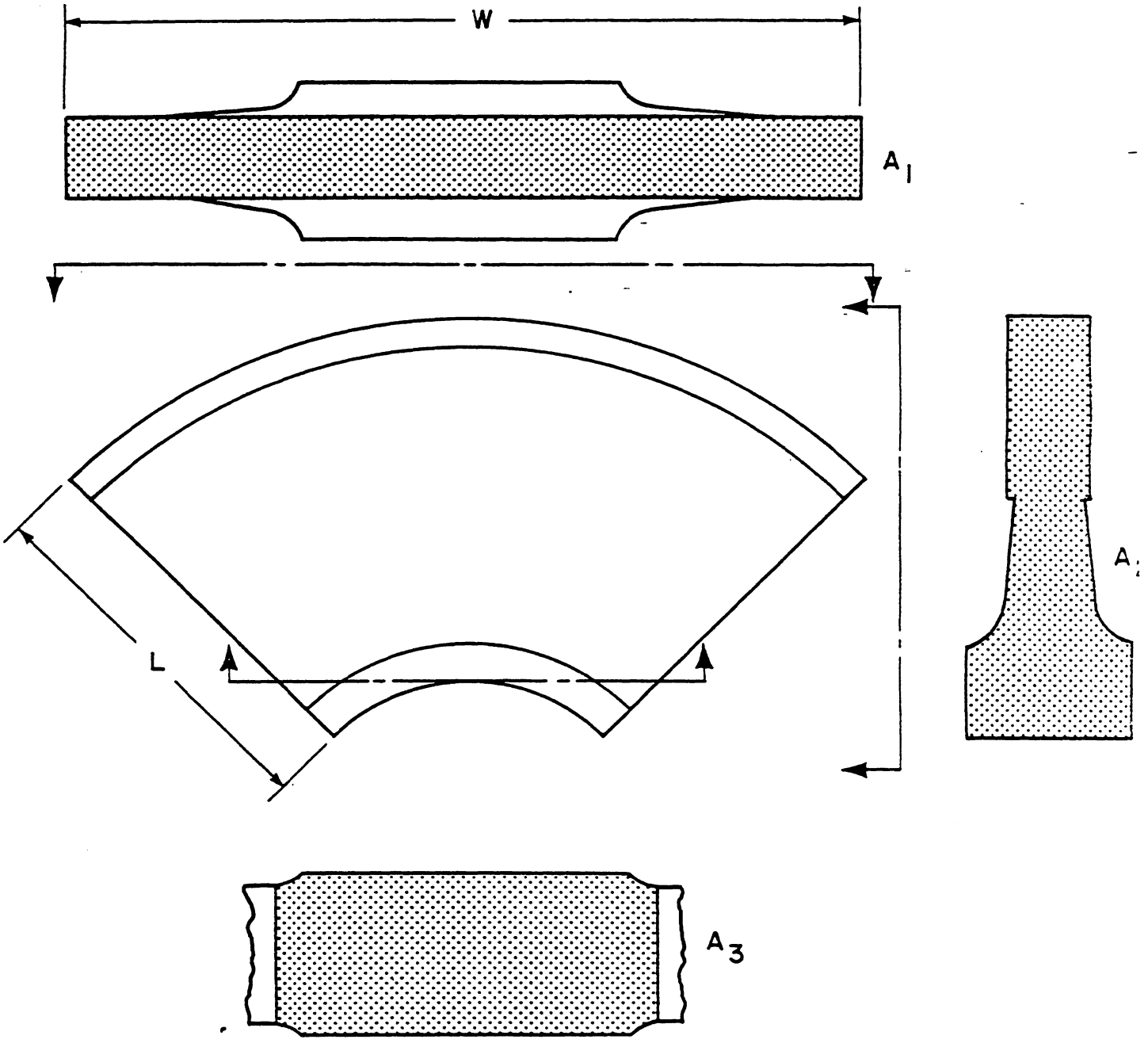

FIGURE 10.2.3-3 Physical Dimensions of Important Potential Turbine Missiles

Security-Related Information - Figure 10.2.3-4 Withhold Under 10 CFR 2.390

10.3 Main Steam Supply System

10.3.1 Design Bases

The Main Steam Supply System is designed to conduct steam from the steam generator outlets to the high-pressure turbine and to the condenser steam dump system. This system also supplies steam to the feedwater pump turbines, auxiliary feedwater pump turbines, main turbine second stage reheaters, and turbine seals.

The Main Steam Supply System includes self-actuating safety valves to provide emergency pressure relief for steam generators, and atmospheric relief valves to provide the means for plant cooldown by steam discharge to atmosphere if the turbine bypass system is not available.

The Main Steam Supply System is designed to TVA Class B requirements from the steam generator outlet out to and including the main steam line isolation valves and flued-anchors. A failure or malfunction of any of the TVA Class B portion of the system must not:

a. Reduce flow capability of the Auxiliary Feedwater System.
b. Render inoperative any engineered safeguard system.
c. Initiate a loss-of-coolant accident.
d. Cause failure of any other steam (or feedwater) line.
e. Result in the containment pressure exceeding design value.
f. Impair the containment integrity.
g. Allow uncontrolled blowdown of more than one steam generator.

The remainder of the Main Steam Supply System, all piping downstream of the main steam line isolation valves, is designed to the requirements of TVA Class H (ANSI B31.1) or TVA Class L.

The main steam flow restrictor limits steam flow, in event of a steam line break downstream of the flow restrictor, to safety analysis limits which is required to reduce the probability of fuel clad damage as discussed in Section 15.4.2.

10.3.2 System Design Description

10.3.2.1 System Design

The Main Steam Supply System is shown schematically on Figure 10.3.2-1. The steam flows from each of four steam generators through containment and the main steam line isolation valves in a 32-inch outside diameter pipe. Each steam supply includes a flow restrictor, which will act to limit the maximum flow and the resulting thrust force created by a steam line break. The replacement steam generators incorporated an integral flow limiter into the main steam nozzle.

The steam generator safety valves and atmospheric relief valves are located upstream of the main steam line isolation valves. There are five safety valves per steam generator with a minimum required rated capacity of 3,917,000 lb/h combined. The steam generator safety valves provide emergency pressure relief for the steam generators in the event that steam generation exceeds steam consumption. For safety valve settings refer to Technical Specification 3.7.1, Table 3.7.1-2.

There is one atmospheric relief valve per steam generator. These valves have a capacity as tabulated in Table 10.1-1.

These atmospheric relief valves provide the means for plant cooldown by steam discharge to the atmosphere if the condenser steam dump is not available. These valves will also provide a means of steam generator pressure control if condenser steam dump is not available and by so doing avoid unnecessary lifting of steam generator safety valves. Pressure setting of these valves is slightly less than the relief pressure of the safety valves.

The maximum actual capacity at a steam pressure of 1085 lb/in^{2}g of any single safety or atmospheric relief valve does not exceed a flow of 890,000 lb/h to limit steam release if any one valve is inadvertently stuck open.

Steam supply for the auxiliary feedwater pump turbines is provided by one connection each on two of the main steam lines upstream of the main steam line isolation valves. Connecting into two steam generator steam lines upstream of the main steam line isolation valve provides both redundancy and dependability of supply.

The main steam line isolation and main steam isolation bypass valves are provided to protect the plant during the following accident situations:

1. Break in the steam line from one steam generator inside containment or upstream of MSIV.
2. Break in the steam header downstream of the MSIVs.
3. Steam generator tube rupture.

The main steam line isolation valves are 32-inch globe Y type, straight through flow, air to open, spring to close These valves were modified to prevent reverse flow which has allowed elimination of the downstream check valve. These valves are capable of closing within the required ESF actuation time. In series with and downstream of the isolation valve is a check valve body (internals removed) which is part of the TVA Class B pressure boundary.

In parallel with the main steam isolation valve is a 2-inch globe type main steam isolation bypass valve which is used to provide steam for downstream pipe warming and to equalize the pressure across the main steam isolation valve (MSIV) prior to opening it during plant startup. The main steam isolation bypass valves are air to open, fail-close valves which are capable of closing within 10 seconds of receipt of the same isolation signals provided to the MSIVs.

For accident situation No. 1, the steam generator associated with the damaged line discharges completely into the containment or main steam valve room. The other steam generators would act to feed steam through the interconnecting header to reverse flow into the damaged line and then release into the containment or steam valve room. The closure times specified above for the isolation valves will limit containment pressure rise below design pressure. (See Section 6.2.)

For accident situation No. 2, the time requirements established in situation No. 1 are the limiting case and are satisfactory for requirements resulting from this situation.

For accident situation No. 3, this requirement is not limiting. A fast acting valve is not required. The isolation valves serve to limit the total amount of primary coolant leakage during the shutdown period by isolating the damaged steam generator after pressure is reduced below steam generator shell side design pressure.

The main steam lines downstream of the main steam line isolation valves are 36-inch outside diameter pipes. Four main steam turbine stop valves and turbine control valves are provided at the high pressure turbine inlet. The steam lines are cross-connected ahead of the turbine stop valves. The cross connections provide both an entrance to the Condenser Steam Dump System and a distribution manifold for the turbine stop valves. The turbine is described in Section 10.2, Turbine-Generator. The Turbine Bypass System is described in Section 10.4, Other Features of Steam and Power Conversion System. The Main Steam Supply System interface with the Auxiliary Feedwater and Blowdown Systems are described in the appropriate subsections in Section 10.4, Other Features of Steam and Power Conversion System.

Each steam line flow restrictor is installed in the steam outlet nozzle integral to each replacement steam generator. Steam reaches the 32-inch outside diameter stream outlet nozzle after passing through seven, 6-inch inside diameter flow limiter inserts. The nickel alloy 690 inserts are installed in parallel at the nozzle inlet.

10.3.2.2 Material Compatibility, Codes, and Standards

All (pressure containing) components in the Main Steam Supply System are carbon steel, except for the Unit 1 Main Steam Trap Drain Piping from the condensate pots to the condenser, which is stainless steel. Carbon steel components, damaged by erosion corrosion, may be replaced with Cr Mo Steel or other erosion resistant steel.

Applicable codes, standards, and design conditions (pressure and temperature) are shown in Table 10.3.2-1.

10.3.2.3 NRC Bulletin 88-02 Analysis

To address the issue of rapidly propagating fatigue cracks in steam generator (S/G) tubes as identified in NRC Bulletin 88-02, a thermal-hydraulic analysis of the S/G secondary side was performed by Westinghouse as detailed in WCAP-12289/12290. This analysis was performed at rated steam flow and at a pressure of 800 psia for conservatism. The result of the analysis was that one tube in Unit 1 and two tubes in Unit 2 were required to be removed from service. No other tubes were identified as susceptible. The Sequoyah units have therefore met the requirements of the bulletin, provided modifications are not made to increase the steam flow rate, to decrease the operating steam pressure below 800 psia, or to significantly affect the S/G secondary side recirculating flow (see Section 5.5.2.3.4).

A subsequent evaluation of the Model 51 S/G tubes was performed in support of the 1.3% power uprate program for Units 1 and 2 (Reference Westinghouse WCAP-15725, September, 2001). This evaluation concluded that a few additional tubes would become susceptible to high-cycle fatigue at the higher power if the operating steam pressure falls below approximately 800 psia. These tubes would need to be repaired if this occurs.

The materials for piping and valves in the TVA Class B portion of the system are impact tested to plus (+) 10°F as per Appendix I, ANSI B31.7, for pipe and fittings and as per Appendix E, Draft ASME Pump and Valve Code for Nuclear Power for valves. The test temperature of plus (+) 10°F is related to a minimum service temperature of plus (+) 70° (hydro test water temperature).

10.3.3 Design Evaluation

The portion of the Main Steam Supply System designed to TVA Class B requirements is Category I seismically qualified. The TVA Class B portion of the system is protected from missiles and pipe whip by restraints, physical separation, or barriers. Redundant electrical power and air supplies assure reliable system operation, and safe shutdown capability. Redundant steam supply connections are provided for the auxiliary feedwater steam turbine.

A tabulation of all seismic Category I valves in the Main Steam Supply System relied upon either to assure safe plant shutdown or to mitigate the consequences of a transient or accident is provided in Table 10.3.3-1. This tabulation also includes the type and size of valve, the actuation type, and the environmental design criteria to which the valves are qualified, as stated in the design specifications.

The safety valves provide over 100 percent relieving capacity to protect the system from overpressure. The relief valves, since they have a set pressure slightly lower than the safety valves, prevent excessive lifting of safety valves. Four atmospheric relief valves have been provided per unit (one per steam generator). Only two valves are required for plant cooldown following any credible accident.

The atmospheric relief valves may also be used, in the event of a flood (see FSAR Section 2.4A.2.2), to maintain the pressure in the secondary side of the steam generators. The atmospheric relief valves can be adjusted by controls in the main or auxiliary control room. Also, a manual loading station and the relief valve handwheel provide additional backup control for each relief valve.

The Main Steam Supply System is designed to comply with the 1974 Edition of ASME Section XI, Inservice Inspection of Nuclear Power Plant Components, to the extent practical under the original design. Class 2 piping and valves which are not accessible for examination by volumetric and surface methods as outlined in the Code will be listed in the detailed inservice inspection program and will be inspected for signs of leakage while under pressure. Inservice testing of Code Class 2 valves will be tested as outlined in the ASME Inservice Valve Testing Program basis document which is referenced in Section 6.8 of the FSAR.

See Section 3.11 and subsection 10.3.6 for Environmental Design of the Main Steam Supply System. Accident considerations, situations, and/or analysis are discussed in subsections 10.3.1 and 10.3.2, and Chapter 15.

In response to a licensing question concerning the NRC staff position (BTP RSB 5-1) for the Residual Heat Removal System (RHR) and the steam generator relief valves, operators, air and power supplies; the following information on the atmospheric relief valves was provided.

The Sequoyah (SQN) steam generator powered atmospheric relief valves are seismically qualified. The air supplies to these valves are from the plant safety grade auxiliary control air system. The power and air supplies to these vales are trainized (two valves per train), receiving necessary electrical power from the 125-volt vital battery system.

The most limiting single failure would be the loss of one train of the safety grade air system, or one channel of vital power. This would prevent control room initiated steam relief via two of the four power-operated relief valves. Only two valves are required. Operating personnel could manually release steam from any affected valves (via handwheels outside of containment).

The second most limiting single failure would be a mechanical breakdown within one of these atmospheric relief valves so that the valve would be "frozen" shut. In this case, the remaining three relief valves are more than sufficient to maintain safe shutdown.

The ability to manually operate the atmospheric relief valves and to communicate with the main control room (MCR) at the same time was verified during preoperational tests W-8.3, "Engineered Safety Features Actuation System Operational Test," and W-10.3, "Steam Dump Control."

A steam flow restriction is supplied in each main steam line inside the containment building to limit flow in the event of a steam line break downstream of the restrictor. The restriction is located as close as feasible to the steam generator outlet nozzle in order to minimize piping preceding the restriction, thereby reducing the probability of a steam line break upstream of the restrictor. The restrictors were removed during steam generator replacement. The replacement steam generators contain an equivalent flow restrictor which is integral with the main steam outlet nozzle to eliminate the possibility of a main steam line break upstream of the flow restrictors. Being fitted inside the main steam outlet nozzle, a steam flow restrictor is not a pressure boundary component. However, component integrity is assured by satisfaction of ANSI B31.1 requirements. CENP-Westinghouse approved the weld procedures, welders test qualifications, inspection procedures, materials, and the quality assurance program used in design and fabrication of the venturi nozzle for the replacement steam generators.

10.3.4 Tests and Inspections

Performance tests of individual components in manufacturer's shop, integrated preoperational tests of the whole system, and periodic performance tests of the actuation circuitry and mechanical components in accordance with approved plant procedures will assure reliable performance.

Vibration tests on system piping are also performed during the preoperational tests. Details of the vibration operational test program are provided in subsection 3.9.1.1.

Preoperational test requirements are given in Chapter 14.

10.3.5 Water Chemistry

10.3.5.1 Purpose

Water purity in the secondary system, and in the steam generators in particular, is maintained within specified limits in order to minimize fouling of steam generator heat transfer surfaces and maintain steam generator tube integrity.

10.3.5.2 Chemistry Specifications

Specifications for chemistry control in secondary systems such as steam generator steam side, feedwater, and condensate chemistry for various operating modes and conditions have been established with consideration given to various sources. The sources include, but are not limited to PWR experience, Westinghouse specifications, and Steam Generator Owner's Group EPRI guidelines.

10.3.5.3 Chemistry Control

The selection of secondary water chemistry is governed by the secondary system operating mode or condition. A discussion of the water chemistry for these modes and conditions is presented below.

1. Power Operation. During power operation, the condensate, feedwater, and secondary side steam generator chemistries are maintained within the specified limits by providing makeup water of adequate purity and by chemical treatment of the condensate and feedwater systems. Chemical addition systems inject the selected chemical solution into the condensate system. Chemical treatment is accomplished as described in Section 5.5.2.

   Steam generator steam side chemistry during power operations is controlled by steam generator blowdown (subsection 10.4.8), condensate polishing and chemical treatment of the feedwater.

   a. Blowdown - To minimize corrosion and sludge accumulation, control of contaminants dissolved or suspended is required. The quantity of contaminants is effectively controlled by blowing down each steam generator. In the event of primary to secondary leakage or condenser inleakage, blowdown is employed to keep the contaminants within limits. Blowdown contributes to the control of radioactive iodine which may occur in the event of primary to secondary leakage.

   b. Condensate Polishing - The Condensate Cleanup System is described in subsection 10.4.6.

   c. Chemical Treatment - Any combination of chemical additives is supplied by the Feedwater Treatment System and is transported through the condensate and main feedwater lines to the steam generator and is carried along with steam through piping, feedwater heaters, and turbines. See Section 5.5.2.

2. Auxiliary Feedwater. During extended periods of Auxiliary Feedwater use, oxygen scavenging and corrosion control chemicals can be manually added to the Steam Generators. During unit heatup and auxiliary feedwater operation, boric acid can be added to the steam generators.

3. Wet Layup. Hydrazine or carbohydrazide, Dimethylamine, and ammonia are normally added during wet layup of the steam generators.

4. Auxiliary System Support. The hydrazine and ammonia addition systems are both capable of feeding various chemicals to the auxiliary boiler feedwater pump suction. Thus, corrosion inhibitors and oxygen scavenging chemicals are available to the Auxiliary Boiler System.

10.3.5.4 Effect of Water Chemistry on the Radioactive Iodine Partition Coefficient

As a result of the basicity of the secondary side , the radioiodine partition coefficents for both the steam generator and the air ejector system are increased (i.e., a greater portion of radioiodine remains in the liquid phase). Partitioning factors to estimated dose are utilized only for inadvertent steam releases through the atmospheric reliefs. These releases can be estimated based on liquid samples.

10.3.6 Instrument Application

Automatic operation of the main steam line isolation valve is initiated by a main steam isolation signal (see Chapter 7). Provisions are made for remote manual operation from the control room. These valves fail closed on loss of electric power or control air.

Control of the atmospheric relief valves is: (1) a non-safety grade automatic modulating controller using steam line pressure with remote manual control of pressure setpoint from the control room, and (2) safety grade remote manual controls for positive open/close action from the MCR. The non-safety grade automatic control is provided by the plant Distributed Control System (DCS).

In response to licensing question concerning IE Information Notice 79-22 on environmental qualification of control systems, TVA performed a systematic (matrix) evaluation of the environmental effects resulting from high-energy pipe breaks inside and outside containment upon nonsafety-related systems. Specifically, safety features required to mitigate the consequences of high-energy pipe break and those required to obtain and maintain a safe shutdown following such an event were evaluated to determine if a single inappropriate actuation of an interfacing nonsafety-related system could unacceptably affect the required safety feature. TVA's conclusion is that although there is a possibility for disruptive signals to be generated, these are in every case acceptable because the operator will always have sufficient indication and time to take corrective action. Consequently, a safe shutdown can be achieved even if a postulated accident is compounded by environmentally induced inappropriate actuation. Operating instructions have been modified as an additional precaution to preclude the event or to alert the operator to the possibility of the event.

The evaluation concerning the environmental effects on the atmospheric relief and main steam isolation bypass valve controls is as follows. The control system for the atmospheric relief valves could be affected by high-energy pipe breaks in the main steam valve room. This inappropriate opening is considered to be acceptable because (1) adequate annunciations provided to alert the operator to the event, (2) adequate time is available for operator action (3) the control system design assures that the operator can override the inappropriate open signal.

An inappropriate opening of a main steam isolation bypass valve (MSIBV) would defeat steam generator isolation. For Appendix R purposes, the fuses are removed from the MSIBVs during normal operation. This also guards against the valve actuation due to environmental effects in the steam valve vaults following a steam line break or flood.

10.3.7 References

1.0 SQN Design Criteria DC-V-4.1.1, Main Steam System and DC-V-21.0, Environmental Design.

2.0 Westinghouse Report NSD-MWR-0215, The Morpholine/Boric Acid Application Document For Tennessee Valley Authority, Sequoyah Units 1 and 2 Nuclear Power Plants.

3.0 EPRI Report, PWR Secondary Water Chemistry Guidelines.

4.0 EPRI Report NP-5558-SL, Boric Acid Application Guidelines for Intergranular Corrosion, December 1990.

5.0 EPRI Report TR-103117, Effect of Boric Acid on Intergranular Corrosion in Tube Support Plate Crevices, October 1993.

TABLE 10.3.2-1

MAIN STEAM SUPPLY SYSTEM
APPLICABLE CODES, STANDARDS, AND DESIGN CONDITIONS

Steam Generator Shell

a. Design pressure, 1085 lb/in^{2}g
b. Design temperature, 600°F
c. Code, ASME Boiler and Pressure Vessel Code, Section III

Main Steam Piping

a. Design pressure, 1085 lb/in^{2}g
b. Design temperature, 600°F
c. TVA Class B - Code, ANSI B31.1, Code for Pressure Piping with inspection, test, and fabrication to ANSI B31.7 in lieu of applicable Code cases
TVA Class H - Code, ANSI B31.1, Code for Pressure Piping

Main Steam Isolation Valves

a. Design pressure, 1085 lb/in^{2}g
b. Design temperature, 600°F
c. Code, Draft ASME Code for Pumps and Valves for Nuclear Power, 1968/1970 March Addenda, Class II

Main Steam Check Valves (Internals Removed)*

a. Design pressure, 1085 lb/in^{2}g
b. Design temperature, 600°F
c. Code, ASME Boiler and Pressure Vessel Code, Section III, Class 2, 1971 with Winter 71 Addenda; Code Case 1519

Main Steam Safety Valves

a. Design pressure, 1085 lb/in^{2}g
b. Design temperature, 600°F
c. Code, Draft ASME Code for Pumps and Valves for Nuclear Power, Class II

Main Steam Atmospheric Relief Valves

a. Design pressure, 1085 lb/in^{2}g
b. Design temperature, 600°F
c. Code, Draft ASME Code for Pumps and Valves for Nuclear Power, Class II

Main Steam Isolation Bypass Valves

a. Design pressure, 1085 lb/in^{2}g
b. Design temperature, 600°F
c. Code, ASME Section III, Class 2

*Non-functional - Valve body provides pressure boundary

TABLE 10.3.3-1

MAIN STEAM SUPPLY SYSTEM
SEISMIC CATEGORY I VALVES

FSAR Figure No.	Type	Size	Activation	Identification No.
10.3.2-1	"Y" Globe	32 inch	Cylinder	FCV-1-4
10.3.2-1	"Y" Globe	32 inch	Cylinder	FCV-1-11
10.3.2-1	"Y" Globe	32 inch	Cylinder	FCV-1-22
10.3.2-1	"Y" Globe	32 inch	Cylinder	FCV-1-29
10.3.2-1	Check	32 inch	1-623	
10.3.2-1	Check	32 inch	1-624	
10.3.2-1	Check	32 inch	1-625	
10.3.2-1	Check	32 inch	1-626	
10.3.2-1	Safety-Angle	6 x 10 inch	Steam Pressure/ Spring	1-512 through 1-531
10.3.2-1	Relief	8 inch	Cylinder	PCV-1-5
10.3.2-1	Relief	8 inch	Cylinder	PCV-1-12
10.3.2-1	Relief	8 inch	Cylinder	PCV-1-23
10.3.2-1	Relief	8 inch	Cylinder	PCV-1-30
10.3.2-1	Globe	2 inch	Diaphragm	FCV-1-147
10.3.2-1	Globe	2 inch	Diaphragm	FCV-1-148
10.3.2-1	Globe	2 inch	Diaphragm	FCV-1-149
10.3.2-1	Globe	2 inch	Diaphragm	FCV-1-150

Note 1: Refer to SQN DC-V-21.0, Environmental Design

Note 2: Valve internals removed; valve performs no isolation function. Check valve is non-functional. Performs pressure boundary only.

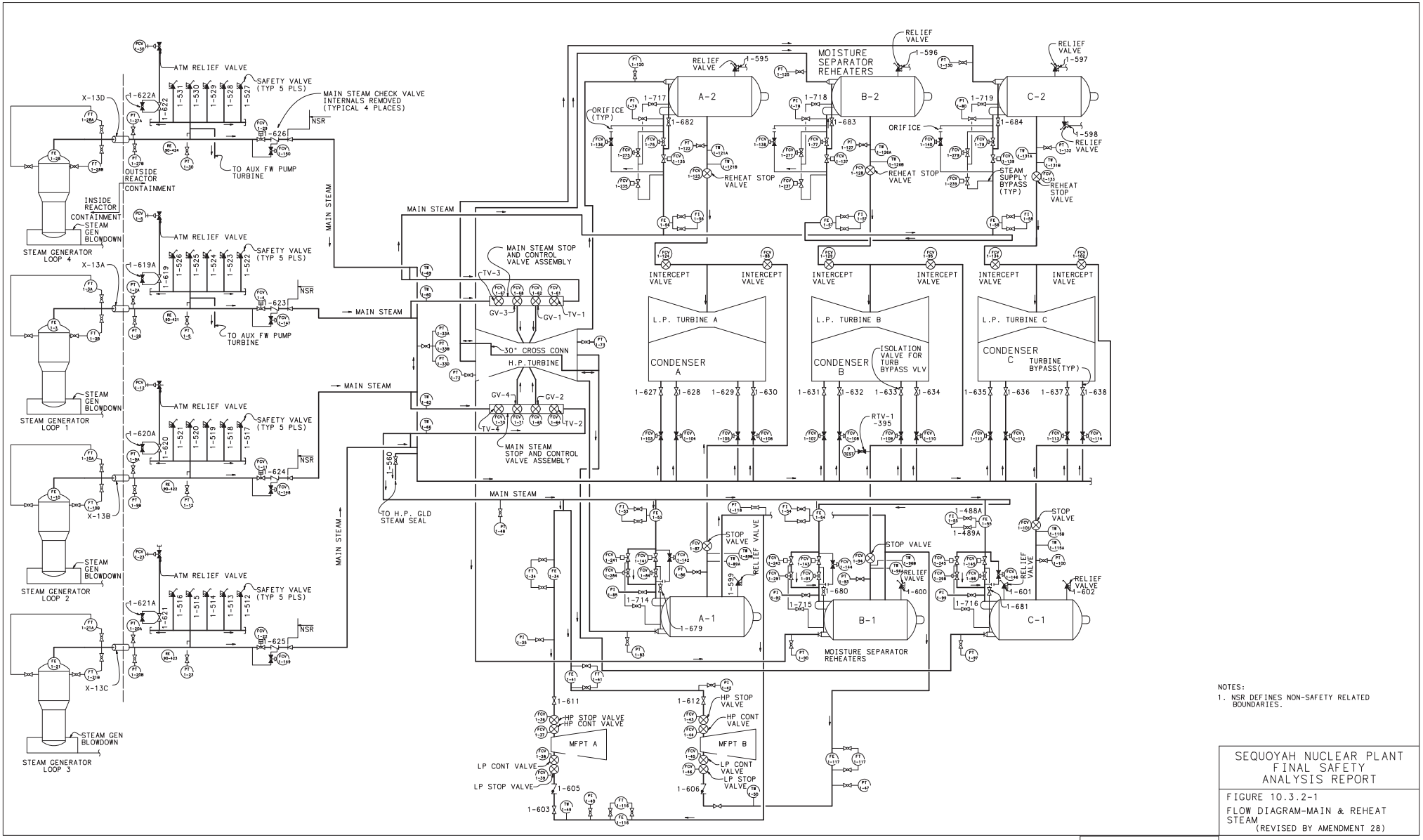

NOTES:

1. NSR DEFINES NON-SAFETY RELATED BOUNDARIES.

SEQUOYAH NUCLEAR PLANT
FINAL SAFETY ANALYSIS REPORT

FIGURE 10.3.2-1

FLOW DIAGRAM-MAIN & REHEAT STEAM
(REVISED BY AMENDMENT 28)

CAD MAINTAINED DRAWING

10.4 OTHER FEATURES OF STEAM AND POWER CONVERSION SYSTEM

10.4.1 Main Condenser

10.4.1.1 Design Bases

The design basis for the main condenser is to provide a heat removal rate of at least 7.829 x 10^9 Btu/hr per unit for the steam system by condensing the steam from the turbine exhaust at a back pressure of 1.88 inches of mercury, absolute. During a cold startup, the condenser must also deaerate the initial inventory of water contained within the condensate-feedwater system.

10.4.1.2 System Description

To provide sufficient capability to meet the functional requirements as stated in subsection 10.4.1.1, the main condenser has been designed with the following specifications:

Total surface area, ft^2	757,952
Circulating water quantity, gal/min	530,600
Circulating water pressure drop through condenser, ft	11.76
Circulating water temperature (yearly average), °F	61
Circulating water temperature rise, °F	29.51
Number of shells	3
Number of passes/shell	1
Tubes:	
Effective length, ft	49'-9"
Number Tubes, Size (inches OD), Birmingham	
Wire Gauge (BWG)	
Internal Condensing Zone	71,220 - 3/4- 24
Impingement (Peripheral) Condensing Zone	3,132 - 3/4-22
Air Cooling Section	3,240 - 3/4-24
Material	Titanium
Tubesheets:	
Base Material, Thickness (inches)	Carbon Steel -1 3/8
Cladding Material, Thickness (inches)	Titanium-3/16
Cleanliness, percent	95
Duty, 10^9 Btu/hr	7.829
Design pressure:	
Shell, lb/in^2g	20
Hotwell, lb/in^2g	20
Waterboxes, lb/in^2g	25
Hotwell storage/shell (normal), gallons	11,000
Oxygen content of condensate, cc/liter	0.005
Bypass system:	
Flow/shell, lb/h	1,987,400
Pressure (at nozzle), lb/in^2g	250
Enthalpy, Btu/lb	1197.5
Air inleakage/shell (SCFM)	8

The condensers are of conventional design, having an expansion joint in the neck and the required impingement baffles to protect the tubes from incoming drains and steam dumps. The hotwell of the condenser has a water storage capacity equivalent to approximately 2 minutes of full load operation. Cross connections are provided for equalization of pressure between condenser shell. Provisions have been made for mounting of three 1/3 capacity low-pressure extraction feedwater heaters in the neck of each condenser.

At the design point, the Main Condenser System will produce a back pressure 1.88 inch Hg absolute when operating at rated turbine output with 61°F cooling water and 95 percent clean tubes. For cooling water temperature variation and various modes of operation of the cooling tower, see subsection 10.4.5, Condenser Cooling Water System. A condenser tube cleaning system is provided to clean the condenser tubes.

The condenser is designed to remove dissolved gases from the condensate, limiting oxygen content to 0.005 cc per liter at any load during normal operation.

During startup the initial inventory of water contained within the Condensate Feedwater System can be deaerated using steam from the opposite unit or auxiliary boiler. A recirculation pipe is run from immediately upstream of the feedwater isolation valves to a perforated pipe running across the full width of each hotwell section. Recirculated condensate is sprayed across the condenser while being deaerated with steam being sprayed up through it from steam sparging nozzles located in a header arrangement in the hotwell.

The condenser can accept a bypass steam flow of approximately 40 percent of maximum guaranteed steam generator flow, without exceeding the turbine low vacuum trip point, or an exhaust hood temperature of 175°F, with circulating water temperature of up to 85°F. This bypass steam dump to the condenser is in addition to the normal duty expected with a throttle flow of 60 percent of maximum guaranteed steam generator flow.

The correct secondary cycle water inventory is maintained by the automatic bypass-makeup condensate system. The level controller(s), which are sensitive to the hotwell level, position the bypass valve or makeup valves (to or from the condensate storage tank) as required to maintain the hotwell water level within preset limits. These level controllers are contained within the DCS.

10.4.1.3 Safety Evaluation

The inventory of radioactive contaminants in the main condensers is a function of the primary coolant radioactivity, the steam generator primary-to-secondary leak rate, and the steam generator and condenser partition factors. Table 10.4.1-1 gives the calculated radioactivity concentrations for a primary-to-secondary leak rate of 20 gallons/day and 0.25 percent failed fuel during power operation. The factors and coefficients are the same as those used in subsection 11.1.

The possible mechanisms for hydrogen production in the secondary system are radiolysis of secondary side water, corrosion, and release of hydrogen from the reactor coolant in the event of primary-to-secondary leakage. Hydrogen generated via these mechanisms is transported to the condenser. Conservative estimates of the extent of hydrogen production by radiolysis shows that negligible amounts of hydrogen (less than 0.001 SCFM) are formed. The water chemistry of the secondary system is such that hydrogen evolution due to corrosion is also

negligible. Of the three possible hydrogen producing mechanisms, only primary-to-secondary leakage has the potential for supplying measurable quantities of hydrogen. However, for large primary-to-secondary leakage rates (1.0 gal/min/unit), the rate of hydrogen release would be less than 0.01 SCFM. This rate is small when compared to the condenser evacuation system capacity of 30 SCFM at 1 inch Hg absolute suction pressure with two vacuum pumps in operation. Thus, hydrogen entering the condenser is effectively exhausted via condenser evacuation system and the potential for hydrogen buildup is negligible.

The condenser could become ineffective because of the loss of some or all of its cooling water and/or excessive air leakage. Either of the above conditions would cause the condenser pressure to increase and upon reaching the setpoint specified in operating procedures, the turbine would be manually tripped. An automatic backup trip is also provided for transient and pressure spike conditions to automatically trip the turbine. Consequently, rising condenser pressure will cause a turbine trip which will produce a reactor trip for power levels greater than 50 percent.

The residual heat would then be removed as steam through the turbine bypass valves until they were tripped closed because of a condenser pressure of approximately 6 inches to 7 inches Hg absolute or the loss of the circulating water pumps. After the turbine bypass valves are tripped closed, the residual heat is removed as steam through the SG power operated relief valves and/or the ASME Code safety valves to the atmosphere.

10.4.1.4 Inspection and Testing

Prior to operation, the condenser was tested for leaks by completely filling the shell with condensate. Currently, other NDT methods (such as eddy current testing to identify leaking condenser tubes) are used to test the condenser. Manways provide access to waterboxes, tube sheets, lower steam inlet section, shell, and hotwell for purposes of inspection, repair or tube plugging.

10.4.1.5 Instrumentation

Sufficient level controllers, level switches, pressure switches, temperature switches, etc., were provided to permit personnel to conveniently and safely operate this condenser system.

10.4.2 Main Condenser Evacuation System

10.4.2.1 Design Bases

The design basis for the main condenser evacuation system is to create and maintain condenser back pressure at 1.0 inch Hg absolute by removing noncondensable gas and air inleakage. The design evacuation rate is 30 SCFM at the above suction pressure and with two pumps in operation.

10.4.2.2 System Description

The Main Condenser Evacuation System is shown on Figure 10.4.2-1. To provide sufficient capability to meet the functional requirements as stated in subsection 10.4.2.1, the Main

Condenser Evacuation System has been designed with the following specifications:

Type of evacuating equipment	Mechanical vacuum pumps
Number of vacuum pumps, per unit	3
Air capacity at suction pressure of 1 inch Hg absolute, SCFM, per pump at normal operation	15
Air capacity at suction pressure of 15 inches Hg absolute, SCFM per pump at startup	1000

The vacuum pumps are two-stage liquid ring type pumps.

Two pumps, operating in parallel, are adequate for the removal of the maximum expected air inleakage of 24 SCFM. The third vacuum pump is arranged to start automatically on decreasing condenser vacuum.

The discharge from all three vacuum pumps can be routed through a HEPA filter-charcoal adsorber train, which consists of an electric duct heater, HEPA filter unit (optional), charcoal adsorber unit (optional), and connecting piping. The discharge is monitored with a low, mid, and a high range noble gas effluent radiation detector before it is exhausted to the outdoors from the turbine roof ventilators. Refer to Figure 10.4.2-1.

The system is designed to cleanup approximately 45 cfm of condenser exhaust. During unit startup, periods of high condenser leakage or periods of zero or low secondary side activity, the flow rate will be allowed to bypass the cleanup system assembly. A pressure differential switch will automatically operate to open the bypass dampers upon an excessive filter pressure drop.

The optional charcoal adsorber must remain dry for efficient operation. Since the condenser exhaust may be expected to be approximately 100°F and 100 percent relative humidity, the 500 watt duct heater is designed to heat the exhaust approximately 30°F and to thus lower the relative humidity to approximately 50 percent before entering the filter units.

10.4.2.3 Safety Evaluation

Depending upon actual air in-leakage to the condenser one or two of the three vacuum pumps are considered to be spares. These spare pump(s) automatically start when the condenser back pressure increases. Should the back pressure continue to increase (because of inadequate air removal capability or a partial loss of cooling water), a high back pressure alarm would sound and the turbine may be manually tripped and consequently may cause a reactor trip. However, an auto trip will occur if back pressure continues to increase beyond the alarmed setpoint.

Details of the radiological evaluation of the condenser evacuation system are contained in Chapter 11.

10.4.2.4 Inspection and Testing

The operating characteristics for each vacuum pump will be established throughout the operating range by factory tests.

A flowmeter is provided in the discharge of each vacuum pump. Periodic readings of these flowmeters will indicate whether or not the air inleakage to the condenser is within acceptable limits. These readings will also indicate the effectiveness of the operating vacuum pumps.

10.4.2.5 Instrumentation

The necessary pressure and temperature switches are provided to automatically start the standby vacuum pump or shutdown a malfunctioning (vacuum) pump. Radiation monitors are provided to detect any radioactivity in the vacuum pump discharge.

10.4.3 Turbine Gland Sealing System

10.4.3.1 Design Bases

The turbine gland sealing is designed to provide means of sealing the main turbine shafts and valve stems and the main feed pump turbine shafts, using steam from upstream of the turbine stop valves. This sealing can be accomplished automatically with steam supply pressures of from 185 to 1100 lb/in^2a. Sealing of the turbine glands with the steam supply pressure below 185 psia can be accomplished by manually or remotely opening the steam seal regulating valve bypass valve.

Steam from the opposite unit or auxiliary boiler can be supplied to the seals during startup.

10.4.3.2 System Description

The purpose of the gland steam sealing system is to prevent leakage of air into the turbine casing, and, conversely, prevent the leakage of steam into the turbine room when turbine casing is pressurized.

The system utilizes labyrinth type seals. Each seal is equipped with two annular shaped chambers which are located among the packing rings. The chamber nearest the turbine casing is maintained at a pressure of approximately 16 lb/in^2a by the admission of sealing steam or the controlled leak off of higher-pressure steam.

The outer chamber is maintained at a slight vacuum (approximately 3 to 5 inches water) by the Gland Steam Exhauster System. This vacuum causes the sealing steam to leak outward and mix with the inward leaking air. This mixture flows to gland steam condenser where most of the steam component is condensed and returned to the secondary cycle. The noncondensables are forced, by the exhauster, through piping to the outside of the building.

10.4.3.3 Safety Evaluation

Since this is a PWR, radioactive steam in the Steam Seal System is of very small consequence. The exhauster discharge is piped outside of the building to prevent the possibility of accumulating radioactive particles in a stagnant building area. Information regarding the design for monitoring radioactivity is presented in FSAR Section 12.1. The presence of radioactivity in the secondary cycle (main steam) which could leak through the turbine gland seals (in the event

that the gland steam condenser exhausters fail to work properly) would be detected in the discharge of the main condenser vacuum pumps. The radiological effects of this system are negligible during normal operation.

In the event one exhauster is lost, the operator will isolate the ineffective exhauster and start the spare (exhauster). Should both exhausters fail, seal steam will leak into the turbine room.

If the steam seal supply fails, excess air leakage will probably trip the turbine because of low vacuum.

A number of safety valves and rupture diaphragms are installed on this system to protect the various components against high pressure.

10.4.3.4 Inspection and Testing

This equipment will be tested by the vendor in accordance with the various applicable code requirements. Periodic tests will be performed by the operator to verify the integrity of this system with respect to its capability of maintaining the turbine seals.

10.4.3.5 Instrumentation

Sufficient instrumentation has been provided to satisfy all system functional requirements and to permit safe, convenient operation by plant personnel.

System performance is constantly monitored by measuring gland steam exhauster vacuum and supply steam header pressure.

10.4.4 Turbine Bypass System

10.4.4.1 Design Bases

The Turbine Bypass System's design basis reduces the magnitude of nuclear system transients following large turbine load reductions by dumping throttle steam directly to the main condenser, thereby creating an artificial load on the reactor.

The Turbine Bypass System has the following functional requirements:

a. Permit a direct bypass flow to the main condenser of 40 percent of rated turbine flow, thereby allowing a turbine step load reduction of 50 percent without a resultant reactor trip.

b. Permit turbine trip (accompanied by reactor trip) from full load without lifting steam generator safety valves.

c. Provide plant flexibility during operation, by allowing turbine load changes in excess of the base NSSS design without reactor trip.

d. Provide controlled cooldown of the NSSS.

e. Assist in achieving stable startup of the plant.

10.4.4.2 System Description

The Turbine Bypass System is shown on Figure 10.3.2-1 for the main and reheat steam.

The capability for meeting the functional requirements of subsection 10.4.4.1 has been provided by designing the equipment to the following specifications:

Number of valves - 12

Flow per valve - Unit 1 (580,000 lb/hr) Unit 2 (577,000 lb/hr)

Main Steam Pressure at Valve Inlet (for above flow) - Unit 1 - 827 psia Unit 2 - 825 psia

Maximum flow per valve at 1085 lb/in^{2}g inlet pressure - 890,000 lb/hr

Time to open (full stroke) - 3 seconds

Full stroke modulation - 20 seconds

Failure position - Closed

The steam lines from the four steam generators are cross-connected immediately upstream of the turbine stop valves. Piping is run from this header to the 12 turbine bypass valves and then to the triple-shell condenser. Each of the three condenser shells will receive the discharge from four turbine bypass valves.

The normal steam dump operating mode is T_{avg} which compares the average temperature of the reactor coolant (indication of reactor power level) to the turbine impulse chamber pressure (indication of turbine load). When the reactor power level exceeds the analog of the turbine load, the turbine bypass valves will open in proportion to the mismatch.

The second mode of steam dump operation is steam pressure control. This can be either automatic or manual control (direct use of valve loading signal) and would normally be used for unit startup and shutdown.

The Steam Dump T_{avg} and steam pressure controls are contained within the DCS.

Additional details on the Turbine Bypass System controls are provided in Section 7.7, Control Systems Not Required for Safety.

The bypass valves are built in accordance with ANSI Standard B16.5. All piping in the Steam Bypass System is in accordance with ANSI Standard B31.1.

10.4.4.3 Safety Evaluation

Low-low Reactor Coolant System average temperature will block the signals which supply air to the individual turbine bypass valves. A manual bypass (momentary) of this interlock is provided only for the three turbine bypass valves which are designated as "cooldown" valves.

An alternate method of RCS cooldown, below 350°F (i.e., delay RHR cut-in), is provided via the turbine bypass valves. The alternate method provides for disabling the P-12 interlock during cooldown after entering Mode 4. The temporary disablement can be performed procedurally with no permanent hardware modifications to the unit. Permanent control board indication of the bypassed condition is not provided nor is the bypass automatically removed when the permissive conditions are no longer met.

However, cautions per operating procedures shall be placed on the unit control board alerting Operators of the bypassed condition of the P-12 interlock. The use of all twelve turbine bypass valves is optional for the Operator. The turbine bypass valves are controlled using the Steam Pressure Controller before and after the protective interlock is disabled. The interlock disablement procedure for utilization of all twelve valves is performed only after shutdown (and subsequent cooldown) has been initiated and therefore, does not present a reactor trip hazard. An analysis has been performed to assess the cooldown potential following failure of the steam dump controller after placing all twelve turbine bypass valves in service. It was determined that the three turbine bypass “cooldown” valves spuriously opening at the protective interlock setpoint of 540°F can produce a cooldown rate that far exceeds that of all twelve turbine bypass valves opening at 350°F (temperature below which additional valve use is permitted).

Loss of the control air supply to the diaphragms of the bypass valves will prevent the valves from opening; or, if the valves were open, will trip them closed. Loss of control air can result

from indication of inadequate condenser circulating water, high condenser pressure, low-low T_{avg}, or from failure of some system component(s). In the event of loss of control air, the steam generators will still be protected during all transients by the ASME Code safety valves. Steam generator cooldown capability will be available through use of the power-operated relief valves (atmospheric dump).

Inadvertent or accidental opening of any one bypass valve during power operation will not subject the Reactor Coolant System to an uncontrolled cooldown. Refer to Chapter 15. 13

Failure of the Turbine Bypass System can result in discharge of steam to the atmosphere through the steam generator safety valves. If tube leaks were present prior to the incident, some radioactivity accumulated in the steam generator shell side water would be discharged through the safety valves and will be well within criteria established by 10 CFR 100.

10.4.4.4 Inspection and Testing

This equipment will be tested in accordance with the various code requirements. Periodic tests will be performed to assure that the system remains capable of its functional requirements. Inservice inspection for ASME Section XI is not required.

10.4.4.5 Instrumentation

Sufficient instrumentation has been provided to permit this system to:

a. Satisfy all its functional requirements.

b. Protect the reactor (from low-low T_{avg}).

c. Protect the turbine (from high condenser pressure).

13

10.4.5 Condenser Circulating Water System

This section covers the intake channel, skimmer wall, intake pumping station, forebay pool, main circulating water pumps, circulating water conduits, main condenser, discharge gates, discharge pond, cooling tower lift pumps, lift pump station, natural draft cooling towers, and discharge diffusers for the safety-related impacts of this Heat Rejection System on the plant. 13

The primary objective of the Condenser Circulating Water (CCW) System is to provide cooling water to the condensers of the main steam turbines. This system also provides cooling water for auxiliary equipment, and provides an efficient means of rejecting waste heat from the power generation cycle into the ambient surroundings. Because of its capacity and convenience, the condenser circulating water can also be used to dilute and disperse low-level radioactive liquid wastes. 13

10.4.5.1 Design Basis

a. The CCW provides each unit a nominal flow of 535,000 gal/min to the main steam turbine condensers and sufficient flow to the Raw Cooling Water System for use by auxiliary 13

equipment. The main steam condenser mass flows are based on a maximum temperature rise of 29.5°F for the circulating water through the condensers. This water flow is a sufficient quantity to condense the steam at an optimum main condenser back pressure and dissipate all rejected heat.

b. The CCW can dissipate a portion of the waste heat directly to the atmosphere by use of the cooling towers where required to meet thermal criteria.

c. The CCW can provide for dilution and dispersion of low-level radioactive liquid wastes. Refer to Section 11.2.6.

d. The intake pumping station houses the condenser circulating water pumps, traveling screens, and screen wash pumps.

10.4.5.2 System Description

The flow diagrams for the CCW are shown in Figures 10.4.5-1 and 10.4.5-2.

For each unit three pumps are provided in the intake pumping station to pump condenser circulating water through the condensers. Each pump has a capacity of 187,000 gal/min at a design head of 30 feet. Head losses are held to a minimum by maintaining practical velocities and smoothness of flow commensurate with prudent construction and operating costs.

The intake pumping station or intake structure is located at the land end of the intake channel. To provide cooling water to the condensers at a lower heat sink temperature, water from the river flows into the intake channel under a skimmer wall.

The six circulating water pumps mounted on the pumping station deck are the vertical nonpullout, single-stage, mixed-flow, wet-pit type. Adequate suction for these pumps is provided by the reservoir water level. Each group of three pumps operating in parallel supply the full flow requirements of one generating unit. The pumps are driven by 1750 horsepower, vertical, solid shaft, 240 r/min, weather-protected type outdoor motors.

Each pump is installed in a separate suction well with entering water strained by trash racks and a traveling screen. Each of the three pump discharges is equipped with an 84-inch diameter motor-operated butterfly valve. The discharges are brought together in a concrete transition to a single tunnel to the condensers.

The main condenser, when rejecting waste heat to the system at full-load operation, will raise the temperature of the water by approximately 29.5°F. No chemical treatment is provided for the system. Amertap condenser tube cleaning system is provided for cleaning of condenser tubes during normal operation. A vacuum priming system is provided to ensure that all passages are maintained full of water. Seven cooling tower lift pumps and two natural draft cooling towers have been installed. The seven pumps deliver approximately 980,000 gal/min at a head of 82 feet to the two cooling towers. The pumps are located in the cooling tower pumping station located at the downstream end of the discharge pond. The cooling towers are designed to reject waste heat to the atmosphere, thereby cooling the condenser circulating water when river flow/temperatures will not permit direct CCW discharge to the river.

The system is designed to operate in any of three modes: open, helper, or closed. In the open mode the water bypasses the cooling tower lift pumps and is returned to the reservoir through the diffuser pond and the discharge diffusers. In the helper mode the water is pumped into the cooling towers by the lift pumps, passes through the cooling towers where part of the waste heat is liberated directly to the atmosphere, and the cooled water is then returned to the reservoir through Gate Structure 1, the diffuser pond, and the discharge diffusers. In the closed mode the water is pumped through the cooling towers where the waste heat is liberated directly to the atmosphere and then is returned to the intake channel through Gate Structure 2 located in the return channel.

Blowdown from the towers will be taken from the return channel above Gate 1, mixed with the plant effluent, and discharged directly into the diffuser pond. The system is designed to ensure that under no conditions will the radwaste back flow into the return channel. The ERCW discharges into the return channel and will provide a continuous source of blowdown for effluent dilution when CCW is unavailable.

A 1500-foot diked embankment connects to a diffuser discharge system that limits the water temperature gradient in the river and the upper temperature limit of the river. Two corrugated metal diffuser pipes extend under the dike into the river channel. One diffuser is laid to diffuse the water 350 feet across the north side and the other to diffuse the water 350 feet across the south side of the channel. A sluice gate is provided which allows one diffuser to be isolated if necessary.

Filling and operating of the CCW side of the condensers is accomplished by:

a. Venting.
b. Evacuation by the Vacuum System.
c. Operation of at least two circulating water pumps.

Three circulating water pumps can operate in parallel for each unit. However, if one pump is out of service, the two remaining pumps will deliver sufficient flow for full-load operation but with a higher turbine backpressure. A Vacuum System and a Vent System will allow passages to be maintained full of water.

Differential pressure across each traveling screen is monitored by an Air Bubbler System. When a preset differential pressure of water is reached across the screen, the screen wash pump is started. When a preset pressure is established at the screen wash nozzles, the screen motors are automatically started and the screens are washed until the pump is manually stopped.

In addition to the condenser cooling water requirements, the CCW supplies water to the plant raw cooling water pumps and raw service water pumps, which in turn supplies cooling water to nonessential systems. Raw cooling water can be supplied by gravity head from the river via the condenser intake tunnels in case of complete outage of the circulating water pumps.

10.4.5.3 Safety Evaluation

The pumping station is seismic Category I and is designed for tornado winds.

The condenser circulating water pump motors are exposed above the deck. The condenser circulating water pumps are not designed to seismic Category I requirements, but the motor mounts have been analyzed and determined to be capable of withstanding tornadic wind conditions. The intake channel design is described in subsection 2.4.8.

Flooding of the pumping station due to piping or equipment failure of the Condenser Circulating Water System will not adversely affect the performance of the safety-related equipment such as the ERCW headers inside the station.

The operator will be alerted via main control room annunciation to a rising water level in the turbine condenser pit due to a rupture of the circulating water piping inside the turbine building. The power supply to the CCW pumps are provided with diverse remote manual trip capability to allow the operator to trip the pumps upon either loss of communication between the reservoir and the pumping station forebay or rising water in the condenser pit.

The cooling towers, cooling tower supply pumping station, and pumps are not designed to seismic Category I requirements, since their failure could not adversely affect the performance of any safety-related equipment.

The discharge gate structure, discharge gates, associated machinery, power supply, and control system are no longer required to operate since the new ERCW pumping station is operational. The discharge gates have been mechanically disabled in the open position.

The ERCW pumping station is designed to provide water to the ERCW pumps from the reservoir; therefore, when the natural draft cooling towers are used in the closed mode of operation, the temperature of the water to the ERCW pumps is unaffected. The ERCW pumping station meets all of the ultimate heat sink requirements for the plant.

10.4.5.4 Tests and Inspection

No special tests are required. Routine visual inspection of the system components, instrumentation, and alarms is adequate to verify system operability.

10.4.5.5 Instrumentation Application

Sufficient instrumentation has been provided to satisfy all system functional requirements and to permit safe, convenient operation of the CCW by plant personnel.

10.4.6 Condensate Polishing Demineralizer System

10.4.6.1 Design Bases - Power Conversion

The function of the Condensate Polishing Demineralizer System (CPDS) is to remove dissolved and suspended impurities from the secondary system. The CPDS removes corrosion products which are carried over from the turbine, condenser, feedwater heaters (after startup), and piping. The removal of impurities and corrosion products in the secondary system reduces corrosion damage to the secondary system equipment. The CPDS also removes impurities which might enter the system in the makeup water, and removes radioisotopes which will be carried over the secondary cycle in the event of a primary-to-secondary steam generator tube

leak. The CPDS will also be used to remove impurities which enter the secondary system due to condenser circulating water tube leaks. The continuous steam generator blowdown flow may be processed through the CPDS in normal operation, or it may be discharged when the radioactivity level is low. The blowdown will be treated by the CPDS when radioactivity levels exceeding 10^{-1} microcuries/gm are detected in this stream.

The CPDS will polish condensate before startup and restarts. During this mode the steam generator is isolated from the feedwater. This will ensure that the feedwater quality is within limits specified by the Sequoyah Secondary Water Chemistry Program before feedwater is introduced into the steam generator.

The CPDS will have the capability of polishing the full flow of condensate up to a maximum flow of 17,000 gal/min per reactor unit. The CPDS demineralizer service vessel design temperature is 120°F (140°F maximum) and the design pressure is 300 lb/in^{2}g. The pressure drop across the CPDS demineralizer service vessels will not exceed 60 lb/in^{2}d.

10.4.6.2 System Description

The CPDS for each power generating unit consists of a battery of six mixed-bed demineralizer service vessels. Normally, each service vessel will contain a bed of mixed (cation-anion) resins. The demineralizer service vessels may be operated with other resin(s), or may be used empty. The demineralizer service vessels are placed in service as needed. The system also includes an external regeneration facility, shared between the demineralizer service vessels of the two generating units. The basic regeneration system consists of a resin separation/cation regeneration tank, anion regeneration tank, and resin storage tank. The concentrated chemicals used in regeneration are supplied from the acid and caustic storage tanks. Additional equipment is provided in the regeneration system to promote efficiency in the process. A hot water tank supplies hot dilution water at the caustic mixing tee.

High conductivity chemical injection waste and rinse water are collected in the neutralization tank. The tank is provided with the capability to adjust pH to within effluent limits. The inventory of this tank is sampled and the pH adjusted as required prior to being discharged through the cooling tower blowdown. The inventory of this tank may be discharged to the radwaste system for further processing if required (see Chapter 11).

The backwash, final rinse, and resin sluicing water are collected in either of the two high crud tanks. Both tanks are provided with the capability to adjust pH to within effluent limits. The effluents of these tanks is typically routed through a filter unit to remove suspended solids and resins collected during the cleaning/separation step of the regeneration cycle. The design of the waste treatment portion of the condensate demineralizer system includes a high crud filter (HCF) unit. However, the HCF is typically bypassed in favor of a bag filter unit. The HCF is relatively complicated and costly to operate and generates liquid waste in addition to the solid waste produced by the filtering process. In contrast, the bag filters are inexpensive, easy to operate, and generate only solid waste. In addition, the filter sizes in the bag filter units can be easily varied offering an operational flexibility not available with the HCF. The bag filter unit assembly is in series with the High Crud Filter (HCF) and is installed upstream of the HCF. The bag filter assembly itself consists of three individual bag filter vessels in parallel. During normal operating

mode, two bag filters will be in service. The third filter, which is on standby and isolated, may be placed on line while changing out the clogged filters, one at a time, obviating the need to secure flow through the system. The bag filters and/or the HCF are used to meet the National Pollutant Discharge Elimination System (NPDES) permit release requirements. The inventory of these tanks is discharged to the diffuser pond. The inventory of these tanks may be discharged to the radwaste system for further processing as required (see Chapter 11).

The CPDS demineralizer service vessels and all regeneration equipment are located within the condensate demineralizer building. Each set of six demineralizer service vessels is arranged in one shielded compartment and dedicated to a plant unit. All regeneration vessels and reclaim tanks are arranged in individual compartments. The caustic storage tank and hot water tank are also in the condensate demineralizer building. The acid tank is located in a weather-protected housing near the Condensate Demineralizer Building.

The tanks in the CPDS are all rubber-lined to prevent corrosion except the hot water tank (Keysite lined) and the acid storage tank (unlined). All tanks are closed . All closed tanks in the CPDS are designed and fabricated in accordance with the ASME Code for Unfired Pressure Vessels Section VIII, 1974 edition.

The CPDS is not a safety-related system and is not required for the orderly shutdown of the reactor. The condensate demineralizer building housing the CPDS equipment is a nonseismic structure and all piping, piping hangers, and equipment in this system are nonseismic. The system piping is in accordance with American National Standard Institute B31.1.

The CPDS demineralizer service vessels for each unit are arranged in parallel and are supplied by the condenser hotwell pumps via the inlet header. An outlet header collects the effluent from the demineralizer service vessels and supplies suction flow to either the condensate booster pumps or demineralized condensate pumps (see subsection 10.4.7.1). The bypass valve is located across the influent and effluent headers in parallel with the demineralizer service vessels. Outlet piping from each service vessel is equipped with a resin trap.

The CPDS demineralizer service vessels operate in one of three modes as determined by the position of the bypass valve and the service vessel inlet and outlet valves.

- Full flow polishing (bypass valve closed), is normally used during startup and will be used if required to meet the Sequoyah Water Chemistry Program.

- Throttle bypass (bypass valve partially open), will be the operating mode when the pressure differential across the demineralizer service vessel exceeds the setpoint.

- Full bypass (bypass valve fully open), is normally used during initial system startup and will be used if required to meet the Sequoyah water chemistry program. It will also be the operating mode in the event the CPDS experiences loss of control air and/or electrical failure.

Override is provided for manually positioning the automatic bypass valve in the "open," "close," or "throttle" positions. Automatic throttle bypass protects the demineralizer service vessels from excessive pressure drop. The manual bypass valve may be placed in the throttle bypass position when the influent condensate water quality meets the limits specified by the Sequoyah Water Chemistry Program. The manual bypass valve may be placed in the full bypass position (and the demineralizer service vessel inlet valves closed) when the inlet condensate temperature exceeds 130°F in order to protect the functional characteristics of the ion exchange resins. Continued operation is dependent upon influent water condensate quality.

10.4.6.3 Safety Evaluation

Radionuclides are released to the secondary system when there is a steam generator tube leak. The radionuclides have essentially no effect on the resin ion exchange capacity. Although the radionuclide concentrations have no effect on resin capacity, potential activity levels in the demineralizer service vessels and associated regeneration equipment make it necessary to shield the CPDS equipment.

Gaseous waste is removed from the CPDS area by inducing a negative pressure on the demineralizer service vessel cells, valve galleries, and regeneration equipment cells. The unmonitored exhaust is released to the atmosphere (see Section 9.4.6). Liquid releases are continually monitored for radioactivity (See Chapter 11). Liquid radwaste is processed by the Waste Disposal System (refer to Chapter 11).

10.4.6.4 Tests and Inspections

The CPDS is designed so that all demineralizer service vessels, regeneration equipment, and most valves can be individually isolated from the system if testing or inspection is required, with no curtailment or interruption of power generation. Isolation valves on inlet and outlet or demineralizer service vessels and system bypass valves can be tested and inspected during shutdown if required.

10.4.6.5 Instrumentation

Instrumentation and controls are provided to perform the following functions:

1. Measure, indicate, and record condensate conductivity in the influent header and the effluent line of each demineralizer service vessel.

   High specific conductivity downstream of a particular demineralizer service vessel indicates resin exhaustion, and high influent cation conductivity indicates condenser tube leakage.

   High specific conductivity downstream of particular demineralized service vessels and high cation conductivity of the influent header are annunciated at the local control panel.

2. Measure pressure differential between influent and effluent headers, and throttle the valve bypassing the demineralizer service vessels on high differential signal when the bypass valve is closed.

3. Provide local annunciation when the bypass valve is throttled on a high differential pressure signal.

4. Measure and indicate condensate temperature at the influent header. High influent condensate temperature (130°F) is alarmed locally.

5. Measure, record, and indicate flow rates through individual demineralizer service vessels. Flow rates through each demineralizer service vessel indicates extent of crud loading.

6. Annunciate locally high pressure differential across each resin trap.

7. Measure, indicate, and record the sodium content in either the influent condensate header, the effluent condensate header or any 1 of 6 polisher outlet headers. High sodium content is annunciated locally.

10.4.7 Condensate - Feedwater System

10.4.7.1 Condensate - Main Feedwater System

10.4.7.1.1 Design Bases

The Condensate-Feedwater System is designed to supply a sufficient quantity of feedwater to the steam generator secondary side inlet during all normal operating conditions and to guarantee that feedwater will not be delivered to the steam generators when feedwater isolation is required. A complete discussion of feedwater isolation is included in Chapter 15.

The condensate and feedwater system pumps take suction from the main condenser hotwells and deliver water to the steam generators at an elevated temperature and pressure. These systems are capable of delivering water to the steam generators at the rated thermal power as depicted in Figures 10.1-2 and 10.1-3.

10.4.7.1.2 System Description

The flow diagrams for the Condensate-Feedwater System are presented in Figures 10.4.2-1, 10.4.7-1, and 10.4.7-2. Important design parameters are provided in Table 10.1-1.

The ability to meet the design requirements of Subsection 10.4.7.1.1 is provided by the following equipment (per unit):

(a) Hotwell Pumps

(b) Demineralized Condensate Pumps

(c) Condensate Booster Pumps

(d) Main Feedwater Pumps

(e) Main Feedwater Pump Turbine

(f) Main Feedwater Pump Turbine Condenser

Number - 2
Manufacturer - Westinghouse Electric Corporation
304 Stainless Steel
Channel Design Pressure* - 350 lb/in^{2}g
Channel Design Temperature* - 300°F

(g) Gland Steam Condenser

Number - 1
Manufacturer - Westinghouse Electric Corporation
Tube Material - 316 Stainless Steel
Channel Design Pressure* - 400 lb/in^{2}g
Channel Design Temperature* - 125°F

(h) Feedwater Heaters

Heater No.	Channel Design Pressure*	Channel Design Temperature*
1	1350 lb/in^{2}g	460°F
2	725 lb/in^{2}g	422°F
3	725 lb/in^{2}g	380°F
4	725 lb/in^{2}g	300°F
5	350 lb/in^{2}g	298°F
6	350 lb/in^{2}g	298°F
7	350 lb/in^{2}g	298°F

*Channel side design conditions only tabulated here. For shell side design conditions, see subsection 10.4.9, Heater Drains and Vents.

Feedwater heaters are designed in accordance with HEI standards for closed feedwater heaters and the ASME Boiler and Pressure Vessel Code, Section VIII. All piping and valves from the condenser hotwell to the feedwater isolation valve is designed in accordance with ANSI B31.1, 1967, while the remainder of the Feedwater System is designed in accordance with ANSI B31.1 and inspected and tested in accordance with B31.7.

The system boundaries extend from the condenser hotwell to the inlet of the steam generator.

Condensate is taken from the main condenser hotwells by three vertical, centrifugal, motor-driven hotwell pumps. By approximately 70 percent unit guaranteed load on the main feedwater pump, the three horizontal, centrifugal, motor-driven condensate booster pumps are all in service. By approximately 80 percent feedwater flow, all three demineralized condensate pumps have been placed in service. These pumps, when operating in series with the hotwell pumps, are capable of delivering required flow with sufficient NPSH to the main feedwater pumps under all normal operating conditions.

The two turbine driven, variable speed main feedwater pumps are capable of delivering feedwater to the four steam generators under all expected operating conditions. Main feedwater pump speed is automatically adjusted to meet system demands. The main feedwater pump speed control system maintains a differential pressure determined by the average steam flow from all four steam generators. This setpoint is compared to the actual differential pressure between the main steam header and the main feed pump discharge header. Any difference between the steam flow derived setpoint and the actual setpoint changes pump speed accordingly.

The main feedwater pump manual/auto stations provide the operator with the flexibility of choosing various operating modes. The unit operator will have the option to operate (1) both pumps on manual speed control to base load his operation, (2) to operate one pump on manual with the other automatically swinging with plant load changes, or (3) to let both pumps swing with the load changes.

Feedwater flow to the individual steam generators is controlled automatically above 15 percent load by adjustment of a feedwater regulator valve in the piping to each steam generator. The valve's position is determined by a three element controller that uses steam generator water level, steam flow, and feedwater flow as the control variables. The regulator valves are pneumatically operated and are designed to fail closed on loss of air. During startup and operation below 15 percent load, additional control is available from small bypass valves around the feedwater regulator valves.

The bypass valve’s position is determined using steam generator narrow range and wide range levels along with FW temperature, turbine load, and operator entered level setpoint. Prior to the generator sync, the steam generator level with operator entered level setpoint develops a single element control signal that can be modified by a variable gain unit that adjusts the control signal output based upon feedwater temperature to compensate for feedwater mass density. After the generator is placed online, the turbine impulse pressure developed setpoint replaces the operator entered setpoint. The control signal can also be modified based upon the wide range steam generator level. The bypass valve control is designed to reduce the affects of steam generator level shrink and swell at low power. The bypass valve control is placed into automatic at about 2% power and as the plant

escalates in power, the bypass valve continues to open and control level until about 16-18% power. The bypass valve can transfer to three element control at about 13-14% power. (Three element control uses steam generator level, feedwater flow, and steam flow to control the regulating valve.) At about 15-18% power, the Distributed Control System begins to open the main feedwater regulating valve and begins the process of transferring control from the bypass valve to the main regulating valve.

The feedwater system normally operates at full load with three hotwell, three demineralized condensate, three condensate booster, and two main feedwater pumps in service.

Heating of the condensate-feedwater is accomplished by passing it through a series of closed heat exchangers as described below:

a. Gland Steam Condenser - This exchanger condenses the steam leakoff from all turbine shaft seals and removes the noncondensables (the result of shaft inleakage of air) from this steam. A weighted check valve is provided in a bypass around the condenser to ensure minimum required flow through the condenser at low condensate flow conditions and to minimize pressure drop through the condenser during high condensate flow conditions.

b. Main Feedwater Pump Turbine Condensers - Each main feedwater pump turbine is equipped with an individual surface type condenser. Control valves in the inlet and outlet condensate piping to these condensers provide the ability to isolate a condenser if its associated turbine is rendered inoperative and to force 100 percent condensate flow through the operating condenser, thus allowing maximum power operation of the remaining turbine. In order to ensure the availability of a condensate flow path following a trip of both main feedwater pumps, only one of the two condensers can be automatically isolated at any given time. The hotwell pumps will automatically trip if this flow path is not available.

c. Feedwater Heaters - Three parallel strings of heaters, each consisting of three low pressure feedwater heaters, three intermediate pressure feedwater heaters, and one high pressure feedwater heater are provided.

   The heaters are numbered from 1 to 7 with the highest pressure heater designated as No. 1. Motor-operated isolation valves are provided at the inlet to each No. 7 heater and the outlet of each No. 5 heater, the inlet to each No. 4 heater and the outlet of each No. 2 heater, and at the inlet and outlet of each No. 1 heater. High-high level in an applicable heater shell will cause the isolation of the group of heaters in the string in which the high-high level occurred (either the 5, 6, 7, heaters, 2, 3, and 4 heaters, or No. 1 heater in either the A, B, or C string).

Tubes for all heaters are 304 Stainless Steel (SS) except for heaters 5, 6, and 7. The tubes for heaters 5, 6, and 7 are SA-688-304 SS. Tube-to-tube sheet joints in the No. 1 and No. 2 heaters are expanded and welded; tube-to-tube sheet joints are only expanded in the No. 3 through No. 7 heaters.

Minimum flow bypasses are provided for equipment protection. The Condensate System minimum flow bypass is located immediately upstream of the No. 7 heaters. The bypass control valve receives its operating signal from the station flow nozzle located upstream of the gland steam condenser. The valve plug's position is modulated to maintain approximately 5500 gal/min flow through the flow nozzle. This flow is sufficient to protect the hotwell and demineralized condensate pumps and to provide adequate cooling water to the gland steam condenser at all times.

The condensate booster pumps are protected by automatic recirculation control valves. The checking elements of these valves are calibrated to actuate pilot valves which, in turn, open or close the recirculation valves to maintain a minimum flow of approximately 1500 gal/min through each pump.

The Feedwater System has a minimum flow bypass line located downstream of each main feed pump to permit direct recirculation back to the condensers. The minimum flow bypass valve can be modulated automatically in a manner similar to the condensate minimum flow valve or manually to maintain a minimum flow of approximately 3500 gal/min through each operating main feed pump. Operation of the minimum flow bypass valves in automatic is no longer required for pump protection, since the main feed pumps receive redundant trip signals (Train A and B) on main feedwater isolation (i.e., the only time at which the downstream flow path is isolated while the main feed pumps are operating).

Piping is provided around the main feedwater pumps to allow filling the steam generators without operating the main feedwater pumps.

Additional components of the condensate and feedwater systems include an injection water system to provide sealing water to all system pumps, condensate storage tanks which provide capability of controlling feedwater inventory by regulating condenser hotwell level and which provide storage of the water required for operation of the Auxiliary Feedwater System, and facilities for injection of chemicals for oxygen scavenging and feedwater pH control. Complete isolation of feedwater to all steam generators results only from any one of the following Feedwater Isolation (FWI) signals from the Reactor Protection System:

1. High-high steam generator level
2. Safety injection signal
3. Reactor trip along with a low T-average

10.4.7.1.3 Safety Evaluation

The Feedwater System from the steam generator back through the motor operated isolation valve and check valve is a safety system and is designed to TVA class B. This portion of the Feedwater System can be considered an integral part of the Auxiliary Feedwater System.

Feedwater flow to the steam generators is normally interrupted within 9.0 seconds of initiation of a FWI signal. This isolation, accompanied by a reactor trip, is accomplished by closure of redundant valves in the piping to each steam generator and tripping of the main feedwater pumps. The feedwater regulator valves will close in a nominal 7.0 seconds. The FW isolation response time, which includes FW regulator valves closure time and all electronic delays will be less than nine seconds. The signal to initiate closure of these valves is available from both power train A and power train B. The ASME class 2 motor operated containment feedwater isolation valves will close within 7.5 seconds (13 seconds when including load tap changer response time). The isolation valves associated with steam generators 1 and 3 are connected to power train A while those associated with steam generators 2 and 4 are connected to power train B. (Closure of the startup valves bypassing the feedwater regulator valves is guaranteed within nine seconds. Each bypass valve can be closed by a train B signal for steam generators 1 and 3 or train A signal for steam generators 2 and 4.) Each main feedwater pump can be tripped from either a train A or train B signal. If power is not available, condensate booster, demineralized condensate, hotwell, and heater drain tank pumps will deliver no feedwater to the steam generators. Closure of the feedwater regulator and the feedwater isolation

valves and main feedwater pump trip (along with the pump trips during the blackout condition) satisfies feedwater isolation requirements.

The Unit Main Turbine Generator will receive a signal to run the unit back to 77% (Unit 2) and 76.6% (Unit 1) load if: (a) either No. 3 Heater Drain Tank bypass valve is open, (b) the main turbine generator is loaded to greater than 82% (Unit 2) and 81.6% (Unit 1), and (c) after receiving a delayed indication of less than 5500 gpm from the discharge header of the No. 3 Heater Drain Tank Pumps.

A main feed pump trip is annunciated in the Main Control Room, thereby alerting the operator of the potential need for a turbine runback.

When the unit is operating with both main feed pumps in service above approximately 77 percent (Unit 2) and 76.6 percent (Unit 1) guaranteed load and a loss of one main feed pump occurs, the following actions are automatically initiated:

1. Starting of all auxiliary feedwater pumps.

2. Isolation of the main feed pump turbine condenser associated with the tripped pump. Thus 100 percent condensate flow is passed through the active main feed pump turbine condenser allowing maximum power operation of the active feed pump turbine.

3. Acceleration of the active drive turbine to its maximum speed.

4. Turbine runback.

The above actions assist in maintaining steam generator secondary water inventory and decrease the potential for a reactor trip. Should steam generator secondary water inventory not be maintained, a reactor trip will either be manually initiated on decreasing steam generator water level or automatically initiated on low-low steam generator water level.

Insufficient NPSH at the main feed pump suction can result in a decrease in steam generator level. Low NPSH at the main feed pump suction is annunciated in the main control room, thereby alerting the unit operator of the need for a load runback to avoid a reactor coolant system transient.

10.4.7.1.4 Inspection and Testing

The operating characteristics for each system pump have been established throughout the operating range by factory tests. Each hotwell and condensate booster pump casing has been tested hydrostatically to 150 percent of its shutoff head plus maximum suction pressure. All parts of each turbine driven main feed pump subject to hydraulic pressure in service have been hydrostatically tested to not less than 150 percent of the maximum pressure to which these parts are subjected when the pump is operating at rated speed and zero flow, with maximum suction pressure from the hotwell and condensate booster pumps.

All parts and assemblies of parts of the feedwater heaters have been hydrostatically tested and tested otherwise as required by applicable sections of the Heat Exchange Institute Standards for Closed Feedwater Heaters; Standards of Feedwater Heater Manufacturers Association, Incorporated; and Section VIII, Unfired Pressure Vessels of the ASME Boiler Code. Heater tubes have been tested as required by ASTM B111, latest edition, except parts 10.1 and 10.2.1 were applicable.

Hydrostatic and other testing of the parts and assemblies of parts of the main feed pump turbine condensers channels and tubes were in accordance with applicable sections of the Heat

Exchange Institute Standards for Closed Feedwater Heaters and Section VIII, Unfired Pressure Vessels, of the ASME Boiler Code.

Manways or removable heads are provided on all heat exchangers to provide access to the tube sheet for inspection, repair, or tube plugging.

A general routine visual surveillance of the system components and piping during operation and maintenance periods for signs of leakage and distress shall be performed to verify system integrity.

The Class B portions of the Feedwater System are designed to comply with the 1974 edition of ASME Section XI, Inservice Inspection of Nuclear Power Plant Components, to the extent practical under the original design. Inservice inspection will be in accordance with the Inservice Inspection program and procedures (section 5.2.8). Inservice testing of Code Class 2 valves will be performed in accordance with ASME Section XI (see Section 6.8).

10.4.7.1.5 Instrumentation

Sufficient level controllers, flow controllers, level switches, limit switches, temperature switches, etc., will be provided to permit personnel to conveniently and safely operate the Condensate-Feedwater System.

10.4.7.2 Auxiliary Feedwater System

10.4.7.2.1 Design Bases

The Auxiliary Feedwater (AFW) System supplies, in the event of a loss of the main feedwater supply, sufficient feedwater to the steam generators to remove primary system stored and residual core energy. It may also be required in some other circumstances such as the evacuation of the main control room, cooldown after a loss-of-coolant accident for a small break, maintaining a water head in the steam generators following a loss-of-coolant accident, or a flood above plant grade.

The system is designed to start automatically in the event of a loss of offsite electrical power, a safety injection signal, low-low SG water level, a trip of one or both main feedwater pumps, any of which will result in, may be coincident with, or may be caused by a reactor trip, or an AMSAC Initiation. Specific details are listed in 10.4.7.2.2. It will supply sufficient feedwater to prevent the relief of primary coolant through the pressurizer safety valves and the uncovering of the core. It has adequate capacity to maintain the reactor at hot standby and then cool the Reactor Coolant (RC) System to the temperature at which the Residual Heat Removal (RHR) System may be placed in operation, but it cannot supply sufficient feedwater for power generation.

Engineered Safety Feature (ESF) standards are met for the AFW System except for the condensate water supply, which is backed up by the Essential Raw Cooling Water (ERCW) System. The ESF grade portion of the system is designed for seismic conditions and single failure requirements, including consideration that the rupture of a feedwater line could be the initiating event. It will provide the required flow to two or more steam generators regardless of any single active or passive failure in the long term.

The AFW System serves as a backup system for supplying feedwater to the secondary side of the steam generators at times when the feedwater system is not available, thereby maintaining the heat sink capabilities of the steam generator. As an Engineered Safeguards System, the AFW System is directly relied upon to prevent core damage and system overpressurization in the event of transients such as a loss of normal feedwater or a secondary system pipe rupture, and to provide a means for plant cooldown following any plant transient. An auxiliary feedwater pump start shall close the SGB isolation valve and SGB sampling isolation valve. The SGBD isolation valves outside containment do not go closed if the AFWP(s) are in operation and receive an auto-start signal for design basis accident mitigation. See Reference 5 for the acceptability of SGBD in service with AFW in service.

Following a reactor trip, decay heat is dissipated by evaporating water in the steam generators and venting the generated steam either to the condensers through the steam dumps or to the atmosphere through the steam generator safety valves or the power-operated relief valves. Steam generator water inventory must be maintained at a level sufficient to ensure adequate heat transfer and continuation of the decay heat removal process. The water level is maintained under these circumstances by the AFW System which delivers an emergency water supply to the steam generators. The AFW System must be capable of functioning for extended periods, allowing time either to restore normal feedwater flow or to proceed with an orderly cooldown of the plant to the reactor coolant temperature where the RHR System can assume the burden of decay heat removal. The AFW System flow and the emergency water supply capacity must be sufficient to remove core decay heat, reactor coolant pump heat, and sensible heat during the plant cooldown. The AFW System can also be used to maintain the steam generator water levels above the tubes following a LOCA. In the latter function, the water head in the steam generators serves as a barrier to prevent leakage of fission products from the Reactor Coolant (RC) System into the secondary plant.

The reactor plant conditions which impose safety-related performance requirements on the design of the AFW System are as follows for the Sequoyah plant:

a. Loss of Main Feedwater Transient
   - Loss of main feedwater with offsite power available
   - Loss of Offsite Power (i.e., loss of main feedwater without offsite power available)

b. Secondary System Pipe Ruptures
   - Feedline rupture
   - Steamline rupture

c. Loss of all Alternating Current Power (only for diverse power source consideration)

d. Loss-of-Coolant Accident (LOCA)

e. Cooldown

<u>Loss of Main Feedwater Transients</u>

The design loss of main feedwater transients are those caused by:

a. Interruptions of the Main Feedwater System flow due to a malfunction in the feedwater or condensate system

b. Loss of offsite power (LOOP) with the consequential shutdown of the system pumps, auxiliaries, and controls

Loss of main feedwater transients are characterized by a rapid reduction in steam generator water levels which results in a reactor trip, a turbine trip, and auxiliary feedwater actuation by the protection system logic. Following reactor trip from high power, the power quickly falls to decay heat levels. The water levels continue to decrease, progressively uncovering the steam generator tubes as decay heat is transferred and discharged in the form of steam either through the steam dump valves to the condenser or through the steam generator safety or power-operated relief valves to the atmosphere. The reactor coolant temperature increases as the residual heat in excess of that dissipated through the steam generators is absorbed. With increased temperature, the volume of reactor coolant expands and begins filling the pressurizer. Without the addition of sufficient auxiliary feedwater, further expansion will result in water being discharged through the pressurizer safety and relief valves. If the temperature rise and the resulting volumetric expansion of the primary coolant are permitted to continue, then (1) pressurizer safety valve capacities may be exceeded causing overpressurization of the RC System and/or (2) the continuing loss of fluid from the primary coolant system may result in bulk boiling in the RC System and eventually in core uncovering, loss of natural circulation, and core damage. If such a situation were ever to occur, the Emergency Core Cooling (ECC) System would be ineffectual because the primary coolant system pressure exceeds the shutoff head of the safety injection pumps, the nitrogen overpressure in the accumulator tanks, and the design pressure of the RHR Loop. Hence, the timely introduction of sufficient auxiliary feedwater is necessary to arrest the decrease in the steam generator water levels, to reverse the rise in reactor coolant temperature, to prevent the pressurizer from filling to a water solid condition, and eventually to establish stable hot standby conditions. Subsequently, a decision may be made to proceed with plant cooldown if the problem cannot be satisfactorily corrected.

The LOOP transient differs from a simple loss of main feedwater in that emergency power sources must be relied upon to operate vital equipment. The loss of power to the electric-driven condenser circulating water pumps results in a loss of condenser vacuum and condenser dump valves. Hence, steam formed by decay heat is relieved through the steam generator safety valves or the power-operated relief valves. The calculated transient is similar for both the loss of main feedwater and the LOOP, except that reactor coolant pump heat input is not a consideration in the LOOP transient following loss of power to the reactor coolant pumps.

Secondary System Pipe Ruptures

The feedwater line rupture accident not only results in the loss of feedwater flow to the steam generators but also results in the complete blowdown of one steam generator within a short time if the rupture should occur downstream of the last nonreturn valve in the main or auxiliary feedwater piping to an individual steam generator. Another significant result of a feedline rupture may be the spilling of auxiliary feedwater out of the break as a consequence of the fact that the auxiliary feedwater branch line may be connected to the main feedwater line in the region of the postulated break. Such situations can result in the spilling of a disproportionately large fraction of the total auxiliary feedwater flow because the system preferentially pumps water to the lowest pressure region in the faulted loop rather than to the effective steam generators which are at relatively high pressure. The system design must allow for terminating, limiting, or minimizing that fraction of auxiliary feedwater flow which is delivered to a faulted loop or spilled through a break in order to ensure that sufficient flow will be delivered to the

remaining effective steam generator(s). The concerns are similar for the main feedwater line rupture as those explained for the loss of main feedwater transients.

Main steamline rupture accident conditions are characterized initially by plant cooldown and, for breaks inside containment, by increasing containment pressure and temperature. Auxiliary feedwater is not needed during the early phase of the transient and flow to the faulted loop will contribute to an excessive release of mass and energy to containment.

Thus, steamline rupture conditions establish the upper limit on auxiliary feedwater flow delivered to a faulted loop. Eventually, however, the RC System will heat up again and auxiliary feedwater flow will be required to be delivered to the unfaulted loop, but at somewhat lower rates than for the loss of feedwater transients described previously. Provisions must be made in the design of the AFW System to limit, control, or terminate the auxiliary feedwater flow to the faulted loop as necessary in order to prevent containment overpressurization following a steamline break inside containment and to ensure the minimum flow to the remaining unfaulted loops.

Loss of All Alternating Current Power (Station Blackout [SBO])

The loss of all alternating current power is postulated as resulting from accident conditions wherein not only onsite and offsite alternating current power is lost but also alternating current emergency power is lost as an assumed common mode failure. Battery power for operation of protection circuits is assumed available. This transient is not evaluated relative to typical criteria listed in Table 10.4.7-1 since multiple failures of safety-grade components or equipment must be assumed; but is considered as a basis for establishing the requirements for providing both an auxiliary feedwater pump power and control source which are not dependent on alternating current power and which are capable of maintaining the plant at hot shutdown until alternating current power is restored.

During a SBO, main feedwater flow to the SGs is terminated as a result of the main feedwater pumps tripping and feedwater regulating valves closing (loss of AC power). The transient is identical to a "Loss of Main Feedwater Transient with LOOP" in which one motor-driven auxiliary feedwater pump (MDAFWP) is needed to provide sufficient cooling water flow to two SGs. The turbine-driven auxiliary feedwater pump (TDAFWP) has a greater flow capacity than one MDAFWP and is capable of supplying all four SGs. The AFW system is actuated on a SBO and the TDAFWP is relied upon to provide sufficient cooling/SG level during the four hours SBO. The SG level can be maintained by controlling TDAFWP speed and by closing the TDAFWP LCVs (if required) using available air from accumulator tank and high pressure air cylinder. On loss of air, the TDAFWP LCVs will fail open.

Loss-of-Coolant Accident (LOCA)

The large break loss-of-coolant accident does not impose AFW System flow requirements above those required by the other accidents addressed in this section.

Small break LOCA's are characterized by relatively slow rates of decrease in RC System pressure and liquid volume. The principal contribution from the AFW System following such small break LOCA's is basically the same as the system's function during hot shutdown or following spurious safety injection signal which trips the reactor. Maintaining a water level inventory in

the secondary side of the steam generators provides a heat sink for removing decay heat and establishes the capability for providing a buoyancy head for natural circulation. The AFW System is utilized to assist in a system cooldown and depressurization following a small break LOCA while bringing the reactor to a cold shutdown condition.

Cooldown

The cooldown function performed by the AFW System is a partial one since the RC System is reduced from normal zero load temperatures to a hot leg temperature of approximately 350°F. The latter is the maximum temperature recommended for placing the RHR System into service. The RHR System completes the cooldown to cold shutdown conditions.

Cooldown may be required following expected transients, following an accident such as a main feedwater line break, loss-of-load/turbine trip, loss of normal feedwater, loss of off-site power, small break LOCA, steam generator tube rupture, or it may be a normal cooldown prior to refueling or performing reactor plant maintenance. If the reactor is tripped following extended operation at rated power level, the AFW System is capable of delivering sufficient auxiliary feedwater to remove decay heat and Reactor Coolant (RC) Pump heat following reactor trip while maintaining the steam generator water level. Following transients or accidents, the recommended cooldown rate is consistent with expected needs and at the same time does not impose additional requirements on the capacities of the auxiliary feedwater pumps, considering a single failure. In any event, the process consists of being able to dissipate plant sensible heat in addition to the decay heat produced by the reactor core.

The primary function of the AFW System is to provide sufficient heat removal capability for heatup accidents following reactor trip to remove the decay heat generated by the core and prevent RC System overpressurization. Other plant protection systems are designed to meet short-term or pretrip fuel failure criteria. The effects of excessive coolant shrinkage are evaluated by the analysis of the rupture of a main steam pipe transient. The maximum flow requirements determined by other bases are incorporated into this analysis, resulting in no additional flow requirements.

Table 10.4.7-1 summarizes the criteria which are the general design bases for each event discussed above. Specific assumptions used in the analyses to verify that the design bases are met are discussed in subsection 10.4.7.2.3.

10.4.7.2.2 System Description

System Design

Except for the common miniflow line to and supply line from the condensate tanks and some shared support facilities such as the condensate storage tanks and parts of the Control System, the two reactor units have separate AFW Systems, as shown in Figure 10.4.7-5. As on all other engineered safeguards, the independence of the two systems will be guaranteed in accordance with General Design Criterion 5. The nonessential condensate supply is isolated from the essential portion of the AFW System by check valves as shown on Figure 10.4.7-5.

The safety-related portion of the Auxiliary Feedwater System is housed in the Auxiliary and Reactor Buildings and steam valve rooms. These structures are designed to withstand the

effects of natural phenomena such as earthquakes and tornadoes as discussed in Chapter 3. Protection of the system from internal and external missiles is addressed in Section 3.5. The description of the supply of feedwater to the steam generators during flood conditions is presented in Appendix 2.4A.

Each system has two 440 gal/min electric motor-driven pumps and one 880 gal/min turbine-driven pump. Each of the electric pumps serves two steam generators; the turbine pump serves all four. All three pumps automatically deliver the minimum safeguards flow upon loss of offsite power, loss of both main feedwater pumps, or a safety injection signal. The electric pumps also start on a two-out-of-three low-low-level signal in any steam generator; and the turbine pump starts on a two-out-of-three low-low level signal in any two steam generators. All three pumps also start automatically upon initiation of Anticipated Transient Without Scram (ATWS) Mitigation System Actuation Circuitry (AMSAC). Refer to Subsection 7.7.1.12 for system description. All three pumps also start on a main feedwater pump trip with plant load greater than 77 percent (Unit 2) and 76.6 percent (Unit 1) in order to lessen the feedwater system transient. Each electric pump supplies sufficient water for evaporative heat removal to prevent operation of the primary system relief valves, or the uncovering of the core. Pump runout protection is provided for all pumps. Each electric motor-driven pump is equipped with a cavitating venturi, which has a small throat area designed to limit flow by choking. The venturi pressure recovery cone allows the pressure loss across the venturi to be minimized. Electric motor-driven pump runout is designed to be limited to 650 gpm to the steam generators, which is less than that which would result in pump cavitation. The turbine-driven pump utilizes the turbine speed control which uses a flow signal to control the flow to the steam generators to 880 gal/min.

The preferred sources of water for all auxiliary feedwater pumps are the two condensate storage tanks that are qualified to the requirements of Design Criteria SQN-DC-V-48.0. A minimum usable level of 240,000 gallons is required per the technical specifications for an operable tank and is reserved for the AFW System by means of an administrative limit based upon indicated level. As an unlimited backup (seismic Category I) water supply, a separate trained ERCW System header feeds each electric pump. The turbine pump can receive backup (seismic Category I) water from either train A or B ERCW header. The ERCW supply can be remote-manually aligned based on CST level or automatically on a two-out-of-three low-pressure signal in the AFW suction line. Consequently, even assuming the worst single active failure, auxiliary feedwater can be supplied indefinitely from the ERCW System. However, since the ERCW System supplies poor quality water, it is not used except in emergencies when the condensate supply is unavailable. The ERCW System is described in subsection 9.2.2. In addition, the Fire Protection (FP) System may be connected downstream of each electric pump by opening a pair of isolation valves to supply unlimited raw water directly to the steam generators in the unlikely event of a flood above plant grade as discussed in Appendix 2.4A.

The AFW System is designed to deliver 40°F to 120°F CST water for pressures ranging from the RHR System cut-in point (equivalent to 110 lb/in^{2}g in the steam generator) to the steam generator safety valve set pressure. System piping is designed for pressures up to approximately 1650 lb/in^{2}g where necessary. Criteria for the AFW System design basis conditions are shown in Table 10.4.7-1. Significant pump design parameters are given in Table 10.4.7-2. Pump characteristics and power requirement curves are given in Figures 10.4.7-6 and 10.4.7-7.
.

Separate 1E power subsystems and fully qualified control air subsystems serve each electric-driven AFW pump and its associated valves. The valves associated with the turbine-driven pump are served by both 1E electric and fully qualified control air subsystems, with appropriate measures precluding any interaction between the two subsystems. The turbine-driven pump receives control power from a third direct current electric channel that is distinct from the channels serving the electric pumps and is not dependent on alternating current power for a period of 4 hours during SBO. The essential components of the AFW System and subsystems necessary for safe shutdown can function as required in the event of a loss of offsite power.

Steam-water slugging (waterhammer) in the feedwater lines of the Sequoyah Nuclear Plant is not expected to occur. One of the prerequisites for waterhammer of this nature is for steam generator level to fall below the feedring and for steam to enter the feedring and feedwater line. Design modifications to the feedring on each steam generator as described below effectively minimize the extent to which steam can accumulate in the feedwater line therefore reducing the likelihood of waterhammer and its magnitude should it occur.

The Sequoyah Nuclear Plant previously utilized Westinghouse Model 51 Steam Generators which contained a feedring design with bottom flow holes for distribution of feedwater to the steam generator. This particular design has been susceptible to the initiation of steamwater slugging (waterhammer) in the feedwater lines under certain operating conditions at other plants. Modifications to the feedring include the plugging of the bottom flow holes and the addition of J-tubes to the top of the feedring. This modification is identical to that made at various other plants of similar design and tested successfully at both the Trojan Nuclear Plant and Indian Point 2. In addition, there is no horizontal section in the feedwater lines adjacent to the steam generators. The feedwater lines turn down immediately outside the steam generators. This provides the optimum arrangement for resistance to steam water slugging and no modifications to the feedwater lines were necessary.

Historical - A special waterhammer test was performed on the Sequoyah Unit 1, original steam generator No. 2, to verify that the potential for waterhammer was eliminated by the present steam generator feedwater ring and associated feedwater piping design. The waterhammer phenomenon observed at other plants without the J-tube design occurred on the recovery of steam generator water level from below the feedwater ring while using the AFW System for makeup. The special test consisted of lowering the level of the water in steam generator No. 2 to below the feedring while the unit was at hot standby conditions. The level was maintained there without any water addition for approximately 2 hours to allow time for the feedwater ring to drain. After the draining and waiting period, approximately 440 gal/min of auxiliary feedwater was injected into steam generator No. 2. No water hammer was observed by plant and NRC personnel or measured by test instrumentation. The test procedure was reviewed and approved by the NRC and the test witnessed by NRC personnel.

The currently installed replacement steam generators also incorporate top discharge sparger nozzles and gooseneck eliminating the steam leakage into the feedring through the header joints. These design features are intended to prevent the initiation of steam-water slugging or waterhammer. In light of the design compliance with applicable USNRC Regulatory Guides and Branch Technical Positions, waterhammer is not considered as a potential hazard to normal and safety-related operations of the replacement steam generators.

Portions of the AFW System have been evaluated as a high-energy system to determine the effects of pipe whip and jet impingement. The evaluation is described in subsections 3.6.1.1 and 3.6.1.2, and TVA's EN DES report 72-22 and CEB report 76-3.

10.4.7.2.3 Safety Evaluation

For the design bases considerations given in subsection 10.4.7.2.1, sufficient feedwater flow can be provided over the required pressure ranges for the design basis accidents/transients, even when assuming the worst single failure.

Analyses were performed for the limiting transients to define the AFW System performance requirements. Specifically, the limiting transients are:

- Loss of Main Feedwater (LOOP)
- Rupture of a Main Feedwater Pipe
- Rupture of a Main Steam Pipe Inside Containment
- Small Break Loss-of-Coolant Accident

In addition to the above analyses, calculations were performed specifically for the Sequoyah Plant to determine the plant cool down flow (storage capacity) requirements. The loss of all alternating current power is evaluated via a comparison to the transient results of a blackout, assuming an available auxiliary pump having a diverse (nonalternating current) power supply. The large break LOCA analysis, as discussed in subsection 10.4.7.2.1, is not performed for the purpose of specifying AFW System flow requirements. AFW flow is conservatively not modeled in the large break LOCA analysis. Each of the analyses listed above are explained in further detail below.

Loss of Main Feedwater (LOOP)

A loss of feedwater, assuming a loss of power to the reactor coolant pumps, was performed in FSAR Section 15.2.9 for the purpose of showing that for a loss of offsite power transient, a single motor-driven auxiliary feedwater pump delivering flow to two steam generators does not result in filling the pressurizer. Furthermore, the peak RC System pressure remains below the criterion for Condition II transients and no fuel failures occur (refer to Table 10.4.7-1). FSAR Section 15.2.9 summarizes the assumptions used in this analysis. The transient analysis begins at the time of reactor trip. This can be done because the trip occurs on a steam generator level signal, hence the core power, temperatures and steam generator level at time of reactor trip do not depend on the event sequence prior to trip. Although the time from the loss of feedwater until the reactor trip occurs cannot be determined from this analysis, this delay is expected to be 20-30 seconds.

The analysis assumes that the plant is initially operating at 102 percent (calorimetric error) of the Engineered Safeguards Design (ESD) rating, a very conservative assumption in defining decay heat and stored energy in the RC System. The reactor is assumed to be tripped on low-low steam generator level, allowing for level uncertainty. The above FSAR Section (15.2.9) shows that there is a considerable margin with respect to filling the pressurizer. A loss of normal feedwater transient with the assumption that the two smallest auxiliary feedwater pumps and reactor coolant pumps are running even results in more margin.

This analysis may establish the minimum capacity of the smallest single pump and also train association of equipment so that this analysis remains valid assuming the most limiting single failure.

Rupture of Main Feedwater Pipe

The double-ended rupture of a main feedwater pipe downstream of the main feedwater line check valve is analyzed in FSAR Section 15.4.2.2. Reactor trip is assumed to occur when steam generators are at the low-level setpoint (adjusted for errors) and the faulted loop is assumed to be empty. This conservative assumption maximizes the stored heat prior to reactor trip and minimizes the ability of the steam generator to remove heat from the RC System following reactor trip due to a conservatively small total steam generator inventory. As in the loss of normal feedwater analysis, the initial power rating was assumed to be 102 percent of the ESD rating. FSAR Section 15.4.2.2 summarizes the assumptions used in this analysis.

The FSAR analysis shows that a minimum AFW system flow of 410 gal/min to at least 2 intact (non-faulted) steam generators within one minute (following the initiation of a low-low steam generator level signal in any steam generator) at the AFW system design pressure is sufficient to mitigate the event. For the case where the break location results in all of the AFW flow spilling out of the break (i.e., the motor-driven pump aligned to the intact steam generators is assumed to fail), a minimum AFW system flow of 1070 gal/min after 10 minutes to the 3 remaining intact steam generators at the AFW system design pressure is sufficient to mitigate the event. In this case, operator action is credited for isolating the AFW system from the break within 10 minutes following the generation of the low-low steam generator water level reactor trip signal, and the required flow is supplied from a combination of the remaining motor-driven AFW pump and the turbine-driven AFW pump. After event turnaround, less AFW is required to continue plant cooldown. The secondary side steam pressure in the unfaulted steam generators, which drives the turbine-driven pump, reaches and remains at approximately the Main Steam safety valve setpoint pressure during the critical transient time (AFW initiation until event turnaround) and after event turnaround. For both scenarios, the criteria listed in Table 10.4.7-1 are met.

The analysis of the 10 minute case in FSAR Section 15.4.2 assumes the turbine-driven pump supplies 660 gal/min to three steam generators (220 gal/min to each intact steam generator) and that the motor-driven pump supplies 410 gal/min to one steam generator, for a total of 1070 gal/min. To provide the 1070 gal/min total AFW flow, the AFW System at Sequoyah Nuclear Plant provides 440 gal/min from the motor-driven pump, and 630 gal/min from the turbine-driven pump. It has been determined that this flow split does not impact the FSAR analysis results, and therefore is acceptable.

This analysis may establish the capacity of single pumps, establishes requirements for layout to preclude indefinite loss of auxiliary feedwater to the postulated break, and establishes train association requirements for equipment so that the AFW System can deliver the minimum flow required assuming the worst single failure.

Rupture of a Main Steam Pipe Inside Containment

Because the steamline break transient is a cooldown, the AFW System is not needed to remove heat in the short term. Furthermore, addition of excessive auxiliary feedwater to the faulted

steam generator will affect the peak containment pressure following a steamline break inside containment. This transient is performed at three power levels for several break sizes. Auxiliary feedwater is assumed to be initiated at the time of the break, independent of system actuation signals. The maximum flow is used for this analysis, considering a case where runout protection for the largest pump fails and also assuming that the faulted steam generator is at atmospheric pressure. It is assumed that the AFW System is manually realigned by the operator to isolate auxiliary feedwater to the faulted steam generator at 10 minutes. FSAR Sections 15.4.2.1 and 6.2.1.3.11 summarizes the assumptions used in this analysis. The criteria stated in Table 10.4.7-1 are met.

This transient establishes the maximum allowable auxiliary feedwater flow rate to a single faulted steam generator assuming all pumps operating, established the basis for runout protection, if needed, and establishes layout requirements so that the flow requirements may be met considering the worst single failure. See FSAR Sections 15.4.2.1, 6.2.1.3.11, and AFW Flow Considerations for Containment Pressure Analysis - Steamline Break," (this section) for additional discussion.

Small Break Loss-of-Coolant Accident

The loss of reactor coolant from small ruptured pipes or from cracks in large pipes which actuates Emergency Core Cooling System is evaluated in FSAR Section 15.3.1. For the small break LOCA event, the amount and duration of AFW flow required is dependent on the break size and its location, the reactor power level and power history, and the initial secondary side steam generator inventory. Sufficient AFW flow is necessary to maintain peak clad temperatures within acceptable limits. For the limiting case identified in FSAR Section 15.3.1, a minimum AFW system flow of 660 gal/min distributed equally to 4 steam generators at the AFW system design pressure must be available within one minute (maximum AFW delivery delay time). The secondary side steam pressure, which drives the turbine-driven AFW pump, remains at or near the Main Steam safety valve (MSSV) set point pressure until normal termination of the transient.

The asymmetric flow splits resulting from an AFW pump combination consisting of a motor-driven AFW pump and a turbine-driven AFW pump (coincident single failure of one motor-driven AFW pump train), are difficult to model. Due to this difficulty, the small break LOCA analysis assumes a turbine-driven AFW pump flow rate of 660 gal/min split equally to 4 steam generators and 0 gal/min from the motor-driven AFW pumps. The AFW system is not a balanced flow design, therefore, an equal split is not actually achieved. To account for this, the AFW system at Sequoyah Nuclear Plant meets the small break LOCA flow requirements by delivering a combined flow from 2 motor-driven pumps (single failure of turbine-driven pump) to 4 steam generators in excess of 660 gal/min, and by delivering 660 gal/min from the turbine-driven pump (single failure of a motor-driven pump) with an additional flow contribution from the remaining motor-driven pump. The additional motor-driven AFW pump flow provides assurance that the analysis assumptions are bounded by actual system performance, since the total AFW delivered to the four steam generators as well as the individual flows to each steam generator is increased.

This analysis may establish the capacity of single pumps, and establishes train association requirements for equipment so that the AFW System can deliver the minimum flow required assuming the worst-single failure.

Plant Cooldown

Maximum and minimum flow requirements from the previously discussed transients meet the flow requirements of plant cooldown. A cooldown (reference Table 10.4.7-1) however, defines the requirements and establishes the minimum storage volume for AFW in the CST.

The cooldown is assumed to commence at the ESD rated power, and maximum trip delays and decay heat source terms are assumed when the reactor is tripped. Subsequent to reactor trip, the plant is held in MODE 3 for 2 hours followed by a cooldown to RHR entry conditions (MODE 4) within 6 hours (for a total of 8 hours). Primary metal, primary water, secondary system metal and secondary system water are all included in the stored heat to be removed by the AFW System. See Table 10.4.7-3 for the items constituting the sensible heat stored in the NSSS. Some of the important input conditions are: CST maximum temperature of 120°F; steam generator refill to 39% narrow range level at RHR cut-in; ANS 1994 decay heat standard; B&W heavy actinide heating. Cooldown is analyzed to establish the minimum water volume of 240,000 gallons for each unit for auxiliary feedwater fluid source normal alignment (Reference 3 and 4) .

System Capabilities

Flow rates for all of the design transients described above have been met by the system for the worst single failure. The flows for those single failures considered are tabulated for the various transients in Table 10.4.7-4 including the following:

A. Alternating current train failure
B. Turbine-driven pump failure
C. Motor-driven pump failure
D. LCV failure (turbine-driven pump system)
E. LCV failure (motor-driven pump system)
F. Pressure switch failures (motor and turbine pump systems)
G. AFW System check valve failure (failure to close on reverse flow)

Credit is taken for operator intervention within 10 minutes to meet the minimum flow requirements on the feedline rupture and the maximum flow requirements for the main steamline break inside containment.

The auxiliary feedwater pumps design takes into consideration allowances for pump wear, seal leakage, and pump recirculation flow.

Figure 10.4.7-5 shows the major features, components and isolation capability of the AFW System for the Sequoyah Nuclear Plant.

A comparison of the Sequoyah Nuclear Plant's AFW System with NRC's Standard Review Plan 10.4.9 and with branch technical position ASB 10-1 was provided to the NRC by the April 28, 1980, TVA letter from L. M. Mills to L. S. Rubenstein. An updated version of this comparison is provided in Table 10.4.7-5.

In response to a licensing question concerning short-term and long-term recommendations resulting from a general NRC investigation of the AFW System, the information listed in Table 10.4.7-6 was provided to the NRC by L. M. Mills' January 25, 1980, letter to L. S. Rubenstein.

Following a large break LOCA, the AFW System may be used for supplying water to the steam generators to develop a waterhead within the vessels and thereby prevent potential tube sheet leakage from the primary to the secondary side of the steam generators (refer to subsection 10.4.7.2.1). The two electric motor-driven pumps will be used to supply the feedwater from the condensate water supply or, as a backup, from the seismically qualified, ERCW System. In the event of a failure of one of the electric motor-driven pumps or of one of the emergency electrical power trains, the water supply to two of the steam generators would be available from the turbine driven auxiliary feedwater pump during the short term. During the long term, the two steam generators can be filled from either train of the ERCW System by opening the isolation valves between the ERCW System and the AFW System upstream of the turbine-driven pump. A steam supply to the turbine-driven pumps is not required for this operation. All necessary transfers and controls for this use of the AFW System can be accomplished from the Main Control Room.

Material Compatibility, Codes, and Standards

Generally, components are of carbon steel. Carbon steel components, damaged by erosion corrosion, may be replaced with Cr Mo Steel or other erosion resistant steel. The condensate storage tanks are lined to prevent corrosion, other components are protected by chemical additions to the water.

The industry codes and standards and seismic classification corresponding to these TVA classifications are given in Chapter 3 and Table 3.2.2-1.

System Reliability

In addition to using high quality components and materials, the AFW System provides complete redundancy in pump capacity and water supply for all cases for which the system is required. Under all credible accident conditions, at least one AFW pump is available to supply each steam generator not affected by the accident with its required feedwater.

Redundant electrical power and air supplies assure reliable system initiation and operation. The electric motor-driven pumps are powered by offsite or onsite sources; the turbine-driven pump takes steam from either of two main steam lines upstream of isolation valves.

The Limiting Condition for operation of the AFW System is given in Technical Specification 3.7.5.

In response to NUREG 0585, TMI-II Lessons Learned Task Force Final Report, the following information concerning reliability studies on the Sequoyah AFW System was provided: TVA agrees that reliability studies can be useful tools for safety evaluations. TVA initiated a comparative risk analysis of the Sequoyah Plant AFW System.

In response to a licensing question concerning the ability of the AFW System to automatically switchover from the condensate storage tank to the ERCW supply without damage to operating

auxiliary feedwater pumps in the event that the condensate storage tanks are damaged by an OBE, the following information was provided: The automatic, backup transfer to the ERCW takes advantage of the amount of water stored in the seismically qualified suction piping to allow transfer to take place without loss of NPSH to the three auxiliary feedwater pumps. The eight transfer valves are seismic Category I, and the transfer system with associated controls meets the requirements of IEEE-279. Numerical analysis and actual plant tests have been performed, and have verified the proper operation of this transfer scheme. In order to ensure that these pumps are not suction-starved during such an emergency automatic switchover, combinations of suction pressure switches and time-delay devices are used. The pressure set point and timer coordinated valve actions are set so that the pumps will have adequate NPSH under all conditions.

AFW Flow Considerations for Containment Pressure Analysis - Steamline Break

In a response to a licensing question on the generic implications of a letter from Virginia Electric and Power Company on the possibility of overpressurizing the containment during a main steamline break inside containment, the following additional information concerning the effects of auxiliary feedwater flow on the containment pressure analysis was provided (also see Chapter 6.0 of this FSAR and Section 6.2.1 of the Watts Bar Nuclear FSAR for additional details).

The AFW System will be actuated shortly after the occurrence of a steamline break. The mass addition to the faulted steam generator from the AFW System may be conservatively determined by using the following assumptions:

a. The entire AFW System is assumed to be actuated at the time of the break and instantaneously pumping at its maximum capacity.

b. The affected steam generator is assumed to be at atmospheric pressure.

c. The intact steam generators are assumed to be at the safety valve set pressure.

d. Flow to the affected steam generator is calculated from AFW System head curves assumptions b and c above and the system line resistances. The effects of any flow limiting devices are considered.

e. The flow to the faulted steam generator from the AFW System is assumed to exist from the time of rupture to and until realignment of the system is completed.

f. The failure of auxiliary feedwater runout control was considered separately, as a single failure. For this case, the auxiliary feedwater flow was determined using all the assumptions listed above and in addition failure of runout control on an auxiliary feedwater pump.

The assumptions made in the main steamline break inside containment analysis are:

a. Breaks were assumed to be double-ended ruptures occurring at the nozzle of one steam generator.

b. Blowdown from the broken steamline is assumed to be saturated steam.

c. Steamline and feedwater line isolation are completed at 10 seconds (see References 1 and 2 for discussion of common station service transfer additional time delay for the feedwater isolation) after the break occurs. The isolation signal is generated by low steam line pressure signal from the Solid State Protection (SSPS) System.

d. Plant power levels of 100.7 percent of nominal full-load power, 30 percent of nominal full-load power, and zero power were considered.

e. Full double-ended guillotine, 0.6 square foot, and 0.4 square foot ruptures were evaluated.

f. Failures of a main steam isolation valve, a diesel generator, a feedwater isolation valve, and auxiliary feedwater runout control were considered individually.

g. The AFW System is manually realigned by the operator after 10 minutes.

h. For the full double-ended ruptures, the main feedwater flow to the steam generator with the broken steamline was calculated based on an initial flow of 100 percent of nominal full power flow and a conservatively rapid steam generator depressurization. The peak value of this flow occurring just before isolation is 377 percent of nominal for breaks at the exit of the steam generator (i.e., upstream of the flow restrictor) and 326 percent of nominal for breaks at the flow measuring nozzle (i.e., downstream of the flow resistrictor). For the smaller breaks, the same feedwater transient was conservatively assumed.

The AFW System on Sequoyah has not been changed in any way that would adversely affect the conclusions of the original analysis.

The following auxiliary feedwater flow rates are used in the analysis:

(1) With runout protection operational a constant auxiliary feedwater flow rate of 1400 gal/min to the faulted steam generator.

(2) Failure of runout protection was simulated by assuming a constant auxiliary feedwater flow rate of 2040 gal/min to the faulted steam generator.

The maximum auxiliary feedwater flow rates calculated using the assumptions outlined above are provided in Table 10.4.7-4. The analyses performed by Westinghouse for the Sequoyah BIT Removal Analysis addressed the steamline break transients and demonstrated that the limits discussed in the original report were still met for an auxiliary feedwater flowrate of 2250 gpm to a faulted steam generator. Therefore, this analysis bounds the Table 10.4.7-4 values.

The analysis of a spectrum of small steamline breaks used an auxiliary feedwater flow rate of 1380 gal/min. The small break cases have been reanalyzed using auxiliary feedwater runout flow in excess of 2000 gal/min. The blowdown rates are different from those analyzed previously. However, since the peak containment temperature in ice condenser plants is primarily sensitive to the peak enthalpy in the blowdown, no change in peak temperature was observed. The transient temperature response was very similar.

The AFW System will be actuated shortly after the occurrence of a steamline break. In the analysis, the auxiliary feedwater flow to the faulted steam generator was assumed to exist from the time of the rupture until realignment of the system is complete. The AFW System is

assumed to be manually realigned by the operator after 10 minutes. Therefore, the analysis assumes maximum auxiliary flow to a depressurized steam generator for a full 10 minutes. The actions taken by the operator to terminate auxiliary feedwater to the faulted steam generator are discussed below.

Operator action is assumed to terminate the auxiliary feedwater flow to the affected steam generator within 10 minutes. Diagnostic information and emergency instructions are available immediately upon initiation of accident to guide the operator to isolate the faulted SG.

Several failures can be postulated which would impair the performance of various steamline break protection systems and therefore would change the net energy releases from a ruptured line. These are:

1. Main Steam Isolation Valve Failure increases the volume of steam piping which is not isolated from the break. When all valves operate, the piping volume capable of blowing down is located between the steam generator and the first isolation valve. If this valve fails, the volume between the break and the isolation valves in the other steam lines including safety and relief valve headers and other connecting lines will feed the break.

2. Failure of a diesel generator would result in the loss of one containment safeguards train resulting in minimum heat removal capability.

3. Failure of a feedwater isolation valve could only result in additional inventory in the feedwater line which would not be isolated from the steam generator. The mass in this volume can flush into the steam generator and exit through the break. The feedwater isolation valve and the feedwater regulating valve close in no more than 7.5 and 7 seconds, respectively, (Valve closure times reflect original analysis, refer to Sections 10.4.7.1.3 and 6.2.1.3.11.) precluding any additional feedwater from being pumped into the steam generator. The additional line volume available to flush into the steam generator is that between the feedwater isolation valve and the feedwater regulating valve, including all headers and connecting lines.

4. Failure of the auxiliary feedwater runout control equipment would result in higher auxiliary feedwater flows entering the steam generator before realignment of the auxiliary feed system.

The effect of these failures is to provide additional fluid which may be released to the containment by the break or reduce the heat removal capability of the containment safeguard systems.

In the analysis presented in Watts Bar FSAR Section 6.2.1.3.10 and referenced for the Sequoyah Nuclear Plant, the single failures listed above have been combined with various combinations of power level and break size to determine the worst steamline break cases.

Failure of the auxiliary feedwater isolation valve to close has not been considered. The maximum auxiliary feedwater flow that can be delivered to a faulted steam generator has been assumed in the analysis for 10 minutes, two cases being considered: (1) with runout protection operational, and (2) with failure of runout protection.

The operator takes action to isolate auxiliary feedwater to the broken steam generator within 10 minutes. At that time, if remote controlled auxiliary feedwater isolation valves fail to close, the operator can trip one or both of the auxiliary feedwater pumps feeding the broken steam generator as required to isolate auxiliary feedwater until the failed valve or other(s) in the line is (are) manually closed.

An analysis of a spectrum of steamline break at various power levels assuming several different single failures is reported in FSAR Section 6.2.1.3.12. These analyses include cases assuming failure of auxiliary feedwater runout protection. Operator action to realign auxiliary feedwater has been assumed at 10 minutes. Since the mass and energy release rates are considerably less than the RC System, the reactor plant conditions which impose safety related double-ended breaks and their total integrated energy is not sufficient to cause ice bed meltout, the containment pressure transients generated for the RC System breaks will be more severe.

The mass and energy release data for the various cases analyzed is provided in Watts Bar FSAR Section 6.2.1.3.10 and Chapter 6.0. The assumptions made regarding the time at which active containment heat removal systems become effective and justification for the same are also provided in Chapter 6.0.

NUREG-0578 Item 2.1.7.a

In response to NUREG 0578, the following information concerning auxiliary feedwater was provided:

AUTO INITIATION OF AUXILIARY FEEDWATER (AFW)

SEQUOYAH NUCLEAR PLANT RESPONSE

SUMMARY

Sequoyah complies with all of the requirements of 2.1.7 of NUREG 0578.

Response

The AFW System is automatically initiated by redundant, coincident logic to preclude loss of function due to a single failure and to provide online testability. The AFW System and initiating logic are described in TVA's response to NRC-OIE Bulletin 74-06A and also in this FSAR Section. The auxiliary feedwater control circuitry including the automatic initiating circuitry which performs a safety related function, is safety-grade, Class 1E, and is powered from a power source connected to the emergency power system. Each auxiliary feedwater pump has manual initiation capability independent of the automatic initiation. The alternating current motor-driven pumps and valves are included in the automatic alignment of the loads to the emergency power system.

CLARIFICATION ITEMS

1. Automatic and manual initiation of AFW are provided at Sequoyah.

2. Online testability is provided.

3. Initiating signals are powered from the emergency power system.

4. The alternating current motor-driven pumps and valves are included in the automatic alignment of loads to the emergency power system.

5. Manual initiation capability is provided independent of the automatic initiation.

6. Appropriate electric power is supplied via the emergency power system for all valves where control air is needed for operation.

10.4.7.2.4 Tests and Inspections

Performance tests of individual components in the manufacturer's shop, integrated preoperational tests of the whole system, and vibration tests on system pumps and piping have been performed to assure reliable performance. Periodic performance tests of the actuation circuitry and mechanical components will continue to assure reliable performance. Vibration tests on system pumps and piping are also performed during system preoperational tests. Details of the vibration operational test program are provided in subsection 3.9.1.1.

During plant startup or shutdown, the system can be tested by pumping condensate storage water to the steam generators. ERCW water will not be fed to the steam generators during this test. The functionality of the ERCW admission valves is tested without feeding ERCW to the SG. Capability of the ERCW pumps is discussed in Section 9.2.

The Class 2 and 3 components of the AFW System are designed to comply with ASME Section XI, Inservice Inspection of Nuclear Power Plant Components, to the extent practical under the original design. Class 2 and 3 components will be inspected per the Inservice Inspection Program (Section 5.2.8). Inservice tests of the AFW system pumps and valves will be performed in accordance with ASME XI (see Section 6.8).

Auxiliary feedwater pump endurance tests for both motor-driven and the turbine-driven pumps were performed prior to exceeding 5 percent power in accordance with the operating license and NRC Task Action Plan Item II.E.1.1. See Table 10.4.7-6.

Surveillance test requirements are given in Technical Specification 3.7.5, Auxiliary Feedwater System.

10.4.7.2.5 Instrumentation Application

The three pumps and support systems start automatically on a loss of offsite power (under voltage on the 6.9 kV shutdown boards), stoppage of both main feedwater pumps, a safety-injection signal, or loss of one main feedwater pump at loads greater than approximately 77 percent (Unit 2) and 76.6 percent (Unit 1). The electric motor-driven supply also starts automatically on a two-out-of-three low-low-level signal from any steam generator, and the turbine-driven supply starts automatically on a two-out-of-three low-low level signal from any two steam generators. The automatic low-low level signal is delayed at low power levels by a trip time delay (TTD) function as described in

FSAR Chapter 7.2. All three pumps also start automatically upon initiation of Anticipated Transient Without Scram (ATWS) Mitigating System Actuation Circuitry (ASMAC) when there is a common mode failure within RPS and low-low steam generator levels exist in three (3) out of four (4) steam generators coincident with plant power levels above approximately 40 percent. Refer to Subsection 7.7.1.12 for system description. All pumps can be started either remote-manually or locally and satisfy the requirements of Regulatory Guide 1.62.

Located between the motor-driven pumps and each steam generator fed by the pump is a modulating level control valve. The valves are normally closed and upon receipt of an opening, arming or enable signal the control transfers from manual to automatic modulating level control. These valves will automatically maintain steam generator water level during AFW System operation. At low steam generator pressure, the control signal is automatically transferred to a smaller level control valve for the motor-driven pumps which is designed for extended operation at low flows and high pressure drops. The system may be controlled manually. If the above systems are being tested in the manual mode and an automatic start signal is received, the controls will revert to automatic. After an accident, the operator can take manual control by blocking the accident signal with the handswitch (the block is reset when the accident signal is removed). However, if the original signal clears and another accident signal occurs after a first accident signal was reset (such as would happen if the operator allowed the steam generator water level to drop to the low-low-level) then the controls will again revert to automatic. Each level control valve has been provided with a local air vent valve to mitigate spurious closure of the valves. This allows the flow to be throttled locally to maintain steam generator level. Between the level control valves and steam generators 1 and 4, an additional air operated valve has been provided with local control air stations to allow the turbine driven and motor driven auxiliary feedwater flow to be throttled locally from outside the West Valve Vault. These air stations have been provided air from the SBO air cylinders. The number of valve operations is limited due to the limited quantity of air available inside the cylinders.

Located between the turbine-driven pump and each steam generator is an air operated level control valve. The valves are normally closed and automatically open upon receipt of an accident/enable signal. When one or both motor-driven auxiliary feedwater pumps are not available, the main control room operator must take manual control of the turbine-driven pump and valves to maintain level in the steam generators which would have been fed by the inoperable motor-driven pump(s). Provisions are also available for manual steam generator level control from the local auxiliary feedwater control panel should the main control room become uninhabitable. When the turbine-driven pump is required to maintain steam generator level, the operator will control the steam generator level by manually adjusting auxiliary feedwater flow via the auxiliary feedwater turbine controller. If required, the valves between the turbine-driven pump and each steam generator may be closed or opened by the operator. The number of valve operations is limited during SBO due to the limited quantity of air available in accumulators upon loss of normal control air supply. The level control valves for Steam Generators 2 and 3 are located outside the West Valve Vault and have been provided with a local air vent valve to mitigate spurious closure of the valves. This allows the flow to be throttled locally to maintain steam generator level. The level control valves for steam generators 1 and 4 are located inside the West Valve Vault; these valves have been provided with local control air stations to allow the turbine driven and motor driven auxiliary feedwater flow to be throttled locally from outside the West Valve Vault. The air control stations can isolate the normal controls to the level control valves. These air stations have been provided air from the SBO air cylinders. The number of valve operations is limited due to the limited quantity of air available inside the cylinders.

The bypass modulating level control valves for the motor-driven AFW System are air operated and are fail-close valves. The normal level control valves for the motor-driven AFW are fail-open. The turbine-driven pump level control valves are fail-open and have air accumulators and high-pressure air cylinders. This air supply is adequate to stroke open/close (manually) the LCV as necessary in order to enhance system's ability to supply water to the steam generator during the SBO. In the event of a

single failure of one level control valve (which affects flow to one steam generator from either a motor-driven pump or the turbine-driven pump), auxiliary feed flow can still be provided to all four steam generators.

The ERCW supply valves for the AFW System are automatic, multiple, qualified valves which admit ERCW water (a fully qualified system) to the suctions of the AFW pumps when required to supply adequate NPSH and suction pressure to these pumps. An alarm for low pressure in the suction lines of the three AFW pumps will annunciate in the Main Control Room.

Appropriate instrumentation such as valve position, flow, pressure, and steam generator level is provided to permit verification of proper system operation. The operation of the AFW System can be monitored using Class 1E instrumentation located in the control room. There is a single indication of the flows into each steam generator, and pump operating status lights for the motor-driven pumps. There is one indication in the main control room for the level in each condensate storage tank. There is local indication for suction and discharge pressure for the turbine- driven AFW pump.

Figures 10.4.7-3 and 10.4.7-4 give details of the pump logic. TVA's logic and control symbols are explained in Appendix 7A.

In response to a licensing question concerning the heatup of the steam generator level measurement (reference leg) instrumentation used for auxiliary feedwater control during a pipe break, the following information was provided: The Sequoyah AFW Systems use transmitters separate from the NSSS System. These transmitters share sense lines, so the heatup problem will affect both. TVA believes the AFW System is satisfactory in that the insulation on the sense line delays the heatup so operator action will not be required for 10 minutes. Sequoyah's emergency procedures specify criteria (levels, etc.) which take into account temperature effects on the reference leg for use during transients involving adverse containments. To further ensure that water is reaching the steam generator, AFW flow to each steam generator is indicated in the control room. The AFW flow transmitters are located in the Auxiliary Building (in a harsh environment and are qualified for this environment).

10.4.8 Steam Generator Blowdown System (SGB)

10.4.8.1 Design Bases

a. To achieve optimum effectiveness in the control of steam generator water chemistry, continuous blowdown is normally maintained from each steam generator during plant operation.

b. The minimum and maximum blowdown flowrate will be 20 gpm and 270 gpm as measured downstream of the second stage heat exchanger.

c. Blowdown may be discharged to the cooling tower blowdown (CTB) provided that the radioactivity concentration of the blowdown effluent can be properly diluted. If the concentration exceeds the high activity monitor setpoint while in the cooling tower mode, the blowdown will automatically be terminated. In addition, SGB Sample System drains must be realigned from the Turbine Building sump to the FDT. Monitor setpoints are based on blowdown rate, available dilution flow as specified in the ODCM and permissible discharge concentrations.

The SGB System discharge will normally be sampled and analyzed at least daily by either online monitors or grab samples during power operation. When blowdown is being treated, analyses will be performed as often as necessary for evaluation of equipment performance.

SGB System components will be designed in accordance with the following:

Blowdown Flash Tank

Type: Carbon steel designed to ASME Boiler and Pressure Vessel Code, Section VIII, Division 1
Quantity: One per unit
Pressure: Design for 150 lb/in^{2}g and 30 inch Hg vacuum

Heat Exchangers

Stacked Heat Exchangers

TEMA type:	NFU
TEMA class:	R (specifies ASME Section VIII, Division I)
No. of shells:	2
Maximum cooling water pressure drop (tube side):	4 psi
Maximum blowdown pressure drop (shell side):	20 psi
Duty:	73.557 x 10^6 Btu/hr
Tube side design pressure temperature:	410 psig and 300°F
Shell side design pressure and temperature:	1085 psig and 600°F

Second Stage Heat Exchanger

TEMA type:	NFU
TEMA class:	R (specifies ASME Section VIII, Division I)
No. of shells:	1
Maximum cooling water pressure drop (tube side):	3 psi

Maximum blowdown pressure drop (shell side):	20 psi
Duty:	4.008 x 10^6 Btu/hr
Tube side design pressure temperature:	410 psig and 200°F
Shell side design pressure and temperature:	1085 psig and 200°F

Control Valves at Individual Stations

To achieve optimum effectiveness in the control of steam generator water chemistry, continuous blowdown is normally maintained at between 20 and 270 gal/min (as measured downstream of the second stage heat exchangers). The blowdown rate will be manually increased or decreased to meet water chemistry requirements. The blowdown rate will be controlled by the manual adjustment of the Blowdown Regulating Valve which is located downstream of the heat exchangers. Any "balancing" or "proportioning" of the flow from the four individual steam generators will be accomplished with the Manual Throttling Valves.

The safety related isolation valves are air operated, spring failed closed, globe valves.

The SGB isolation valves inside containment, SGB sampling isolation valves, and SGB isolation valves outside containment shall close upon receipt of a containment "phase A" isolation signal. Auxiliary feedwater initiation signal shall close the SGB isolation valve outside containment and SGB sampling isolation valve. The SGBD isolation valves outside containment do not go closed if the AFWP(s) are in operation and receive an auto-start signal for design basis accident mitigation. See Reference 5 for the acceptability of SGBD in service with AFW in service.

The CTB valves shall be closed when radioactivity concentrations reach monitor setpoints.

10.4.8.2 System Description

A flow diagram of the SGB System is shown in Figure 10.4.8-1.

Each steam generator is provided with a blowdown connection for controlling the solids and soluble content of the secondary coolant. The blowdown flow rate from each steam generator can be individually regulated using manual throttling valves. The normal blowdown rate from each steam generator ranges from 5 to 60 gal/min.

The individual SGB lines join into a common header and from there can be routed for processing or discharge through one or two flow paths, through the SGB flash tank or through the SGBD heat exchangers. Vapors from the flash tank are routed to the main condenser. Liquid from the heat exchanger path can be routed to the CTB for discharge or to the CPDS. Choice of flow path and process is dependent upon plant operating mode and secondary chemistry.

The water discharge from the blowdown system will be monitored for radioactivity by a radiation monitor during release. The high activity alarm will alert the operator of an increasing radioactivity level. If the radioactivity concentration (except tritium) exceeds the high activity setpoint when dumping to the CTB, the water discharge from the steam generator blowdown will be terminated.

The monitor obtains a representative sample from the blowdown liquid effluent discharge system in the turbine building. The radiation level associated with each individual steam generator blowdown line can be determined by chemistry sampling through sampling points just outside containment such that the leaking steam generator can be identified.

The SGB System also provides for an additional blowdown path during the abnormal event of a flood above plant grade. The normal blowdown paths are isolated and blowdown may be released to the roof of the main steam relief valve room. This system permits both constant low-flow and intermittent high-flow blowdown. Manually operated blowdown valves are provided that are accessible during the flood condition. The design for this flood event assumes that offsite power is not available and that this mode of operation will exist for at least 100 days.

10.4.8.3 Safety Evaluation

Capacity

The SGB System provides capacity to handle a maximum of 270 gal/min of blowdown flow per unit to be sent to the CDPS or discharged. This system is sufficient to treat the highest expected blowdown flow rate from the steam generators.

Radioactivity Releases

During normal operation, the system uses heat exchangers to cool the blowdown liquid. When using the flash tank, the vapor carries with it radioactive materials, principally iodine and noble gases. This vapor is routed to the condenser and is contained in the secondary system. When operating in the heat exchanger flow path, all radioactive materials are also retained in the secondary system.

During operation of a unit with significant primary-to-secondary leakage, all of the blowdown liquid is treated by the CDPS.

Operation with primary-to-secondary leakage results in a buildup of radioactivity in the secondary system. When a leak occurs in one of the steam generators, the radioactivity level increases in that steam generator. If the radioactivity concentration exceeds the high activity setpoint at the blowdown discharge, an alarm alerts the operator of the increasing radioactivity level. If blowdown is being discharged to the CTB and the radioactivity concentration exceeds the high activity setpoint, the blowdown is automatically terminated. At that point, the plant must also realign the SGB sample drains from the Turbine Building sump and divert them to the FDCT. The high activity setpoint is based on blowdown rate, available dilution flow as specified in the ODCM and permissible discharge concentration.

Figure 10.4.8-2 shows gross radioactivity concentrations (except tritium) in the secondary system after 1 year as a function of blowdown rate. The curve is based on the following assumptions:

Primary-to-secondary leak rate, 100 lb/day
Percent of fuel leaking radioactivity, 0.12 percent

The ability to process radioactive blowdown at high rates has a significant effect on the release of airborne radioactive iodine from the plant.

Figure 10.4.8-3 shows releases of I-131 from the vacuum pumps exhaust and turbine building ventilation air as a function of blowdown rate. The following assumptions were used:

Primary-to-secondary leak rate, 110 lb/day
I-131 in primary coolant, 0.625 μCi/gram (0.25 percent of fuel releasing radioactivity)
Steam generator partition factor, 0.01
Main condenser/vacuum pumps decontamination factor, 2000
Air ejector HEPA filter/charcoal absorber decontamination factor, 10
Turbine building steam leak rate, 1700 lb/h

Radioactivity releases due to normal operation of the SGB System are discussed in subsection 11.2.

System Performance During Abnormally High Primary-to-Secondary Leakage

Abnormally high primary-to-secondary leakage has no significant effect on the blowdown system. A leak rate in excess of the technical specification limit requires shut down of the unit. The blowdown system is capable of operating with a leak rate approaching 1 gal/min. A 1 gal/min leak rate would not require that the blowdown rate be increased above 60 gal/min in order to maintain specified secondary system water chemistry unless it occurred at a time when condenser inleakage was high. With a 1 gal/min leak and about 0.12 percent failed fuel, radiation levels in the vicinity of the blowdown treatment system equipment would be higher than with normal operating levels, but would be below design levels.

In the event of a primary-to-secondary leak in excess of 1 gal/min, the blowdown system could be operated after unit shutdown in order to clean the secondary system.

Failure Analysis of System Components

Analyses of various failures in the system are given in Table 10.4.8-1.

10.4.8.4 Tests and Inspections

Prior to operation of the SGB System, instruments will be calibrated, and interlocks and controls will be tested to verify that they function properly.

The Class B portions of the SGB System are designed to comply with the 1974 edition of ASME Section XI, Inservice Inspection of Nuclear Power Plant Components, to the extent practical under the original design. Class B piping and valves will be inspected per the Inservice Inspection Program discussed in subsection 5.2.8. Inservice testing of Code Class 2 valves will be tested as outlined in the ASME Inservice Valve Testing Program basis document which is referenced in Section 6.8 of the FSAR.

Routine inspections and maintenance will be performed on system components in accordance with approved plant procedures.

10.4.8.5 Instrumentation Applications

Instrumentation is provided to perform the logic functions, described herein.

10.4.9 Heater Drains and Vents

10.4.9.1 Design Bases

The Heater Drain system is designed to remove and dispose of all drainage from the moisture separators, reheaters, feedwater heaters, main feed pump turbine condensers and gland steam condensers during all modes of unit operation by returning the condensed water back to the Condensate- Feedwater System.

The Vent System is designed to adequately vent all heat exchangers to assure complete removal of noncondensable gases during all modes of unit operation.

10.4.9.2 System Description

The flow diagrams for the Heater Drains and Vent System are shown in Figures 10.4.9-1 and 10.4.9-2.

To accomplish the design objectives of subsection 10.4.9.1, the following equipment is provided (per unit):

a. No. 3 heater Drain Pumps

b. No. 7 Heater Drain Pumps

c. Feedwater Heaters

Shell side design conditions only given here. See subsection 10.4.7, Condensate-Feedwater System, for channel side design conditions.

Number - 21 (3 strings of 7 heaters)

Heater No.	Shell Design Pressure	Shell Design Temperature
1	450 lb/in^{2}g	650°F
2	300 lb/in^{2}g	650°F
3	232 lb/in^{2}g	380°F
4	75 lb/in^{2}g	380°F
5	50 lb/in^{2}g	650°F
6	50 lb/in^{2}g	650°F
7	50 lb/in^{2}g	650°F

d. Main Feed Pump Turbine Condensers

Shell side design conditions only given here. See subsection 10.4.7, Condensate-Feedwater System, for channel side design conditions.

Number - 2
Shell Design Pressure - 20 lb/in^2 and 30 inches Hg vacuum
Shell Design Temperature - 160°F

e. No. 7 Heater Drain Tank

Number - 1
Design Pressure - 1 inch of Hg absolute to 50 lb/in^{2}g
Design Temperature - 175°F

f. No. 3 Heater Drain Tank

Number - 1
Design Pressure - 200 lb/in^{2}g
Design Temperature - 377°F

g. Moisture Separator Drain Tanks

Number - 6
Design Pressure - 250 lb/in^{2}g
Design Temperature - 401°F

h. High Pressure Reheater Drain Tanks

Number - 6
Design Pressure - 1200 lb/in^{2}g
Design Temperature - 567°F

i. Low Pressure Reheater Drain Tanks

Number - 6
Design Pressure - 500 lb/in^{2}g
Design Temperature - 467°F

j. Main Feed Pump Turbine Condenser Drain Tanks

Number - 1
Design Pressure - 1 inch of Hg absolute to 16 lb/in^{2}g
Design Temperature - 101°F

k. Main Feed Pump Turbine Condenser Drain Pumps

Number - 2
Manufacturer - Crane Deming Pumps
Type: 3M, single stage, single suction, centrifugal
Design Point: 380 gal/min, 57 feet head
Motor Design: 10 hp, 3 ph, 60 Hz, constant speed
Motor Manufacturer - (Unit 1) - U.S. Electric Motors
(Unit 2) - Baldor Electric Company

The shell side of feedwater heaters are equipped with manually valved vent lines as necessary for ventilation during unit startup. The tube side of feedwater heaters are also equipped with manually valved vent lines as necessary for ventilation during unit startup. Feedwater heaters No. 3 & 7 do not have manually valved startup vent lines for ventilation to the atmosphere. Venting to the main condenser of the heater's shell side during normal operation is accomplished through continuous "free blowing" orifices, sized in accordance with recommendations of the Heat Exchange Institute Standards for Closed Feedwater Heaters, 1968. The venting scheme for the high pressure reheaters and low pressure reheaters use air operated valves routed to the condenser during startup. Venting during normal operation is accomplished through air operated valves to the #1 or #2 extraction lines for the high pressure and low pressure reheaters, respectively.

The heaters are numbered from 1 to 7 with the highest pressure designated as No. 1. During normal unit operation, the No. 1 heater drains, composed of the high pressure reheater drains and the No. 1 extraction, cascade into the shell of the No. 2 heater. The No. 2 heater drains, the No. 1 drains, plus the No. 2 extraction and the low pressure reheater drains, cascade into the No. 3 heater drain tank. The No. 3 heater drains (No. 3 extraction) and the moisture separator drains also flow into the No. 3 heater drain tank. Water from the No. 3 heater drain tank is then pumped forward into the condensate cycle (between the No. 3 and No. 2 heaters) by the No. 3 heater drain pumps.

The first extraction from the low pressure turbines is condensed in the No. 4 heaters. These drains are cascaded into the shell of the No. 5 heaters. No. 5 heater drains (No. 5 extraction plus No. 4 heater drains) cascade to the No. 6 heater, whose drains cascade in turn to the No. 7 heater drain tank. The condensed No. 7 extraction and other miscellaneous drains are routed to the No. 7 heater drain tank. These main feed pump turbine condenser drains are pumped to the piping between the No. 7 heater drain tank and the No. 7 heater drain pumps. Water from the main feed pump turbine condenser drains and the No. 7 heater drain tank is pumped forward into the condensate system (at a point between the No. 7 and No. 6 heaters) by the No. 7 heater drain pumps.

Proper level is maintained in the Nos. 1, 2, 4, 5, and 6 feedwater heaters by modulating level control valves that receive their control signal from level indicating controllers mounted on the heater shells. Should the level drop below the normal control range, a low level alarm is sounded. High level in the shells of the No. 2, 5, and 6 heaters results in annunciation of a high level alarm. The No. 1, 2, and 4 heaters are equipped with modulating bypass to condenser valves. Should the level in a No. 1, 2 or 4 heater exceed the normal control level, the bypass valve begins to open. Indication is given in the control room when the bypass valve leaves its seat. If the level exceeds the control range of the bypass valve, high level annunciation occurs. High-high level in a No. 1 heater results in isolation (of both feedwater and extraction steam) of that heater. High-high level in a No. 2 or No. 4 heater results in isolation of the appropriate bank of No. 2, 3, and 4 heaters. High-high level in a No. 5 or 6 heater results in isolation of the appropriate bank of No. 5, 6, and 7 heaters.

All No. 3 and No. 7 heaters are "dry" shelled heaters. Thus, particular care in piping design was taken to ensure that choking of drains as a result of steam entrainment will not occur.

Level in the No. 3 heater drain tank is maintained within the proper range by modulating level control valves at the discharge of the No. 3 heater drain pumps. Level in excess of normal

control range initiates opening of modulating bypass to condenser valves. Indication that the bypass to condenser valve has left the fully closed position is given in the control room. Additional increase in level to a point above the range of the bypass valves annunciates a high level alarm. Low level in the drain tank results in a trip of all operating No. 3 heater drain pumps.

A level control scheme similar to that for the No. 3 heater drain tank is provided for the No. 7 heater drain tank.

No. 3 and No. 7 Heater Drain Tank level control is provided by the DCS.

The moisture separator drains are routed to the No. 3 heater drain tank, low pressure reheater drains to the No. 2 heater shells, and the high pressure reheater drains to the No. 1 heater shells.

Since all moisture separators and reheaters are "dry" shelled vessels, particular care in design of drain piping was taken to prevent choking of drain flow due to steam entrainment between these vessels and their individual drain tanks.

MSRH drain control is provided by maintaining proper level in drain tanks connected to the individual moisture separators, HP reheaters and LP reheaters. This level is controlled in the individual drain tanks by modulating level control valves (one per tank).

Level in excess of the normal control range causes a modulating bypass to condenser valve (one per tank) to open. Indication that a bypass valve has left the fully closed position is given in the main control room. Increase in level to above the control range of the bypass to condenser valve results in a high level alarm being annunciated in the control room. Low level alarm is also annunciated if the level drops below the normal control range.

Air assisted nonreturn valves are provided in each MSRH drain line downstream of the point where the bypass to condenser piping is connected so that, in the event of a turbine pressure transient due to a load rejection, the water stored in the feedwater heaters cannot flash back to the MSRH. The bypass to condenser valves will still be available for level control during a transient of this type.

Feedwater heaters are designed in accordance with applicable sections of Heat Exchange Institute Standards for Closed Feedwater Heaters, Standards of Feedwater Heater Manufacturers Association, Incorporated, and Section VIII, Unfired Pressure Vessels, of the ASME Boiler Code. The No. 3 and No. 7 heater drain tanks are designed in accordance with Section VIII, Unfired Pressure Vessels of the ASME Boiler Code. All moisture separators, reheaters, and associated drain tanks are designed to Section VIII of the ASME Code. All piping and valves in the Heater Drains and Vents System are designed in accordance with ANSI B31.1.

A single drain tank receives the drains from both main feed pump turbine condensers. Normal water level in the tank is maintained by a level control valve at the drain pump discharge that receives its control signal from a level indicating controller mounted to the drain tank. Level below the control range of the controller results in annunciation of a low level alarm. Level above the control range results in annunciation of a high level alarm and coincides with opening of a bypass to condenser valve. Direct operator action is required to close bypass valve after it has opened. The main feed pump condenser drains are equipped with two pumps which take suction from a single drain tank. One pump is started manually while the second pump is put on

standby by placing the selector switch in the auto position. Should the pressure in the discharge of the active pump drop below 25 lb/in^{2}a, the standby pump is automatically started. All pumps conform to applicable paragraphs of the centrifugal pump section of the standards of the Hydraulic Institute in effect when the pumps were purchased.

The three No. 3 heater drain pumps are started as the unit load increases. Conditions that must be satisfied before any pump can start include:

a. Level in the No. 3 heater drain tank above a permissive level set point.

b. Sufficient lubricating oil pressure.

The pumps are manually tripped as load decreases and are no longer needed. In addition, the pumps may be tripped by low level in the No. 3 heater drain tank, low lube oil pressure, or a motor protection signal.

Minimum flow for pump protection is provided by an automatic recirculation control valve at the discharge of each pump.

The No. 7 heater drain pumps are controlled in the same manner as the No. 3 heater drain pumps. A trip of the main turbine will result in manual tripping of all No. 3 and No. 7 heater drain pumps due to low flow.

Typically, at feedwater flows less than 40 percent, all No. 3 and No. 7 heater drains are routed to the condenser. This allows the drain flow to pass through the condensate demineralizers during low load operation. This increases the cleanup rate of the feedwater and prevents corrosion products from the heater drains, which could build up during an outage, from being introduced into the steam generator.

10.4.9.3 Safety Evaluation

With few exceptions, the operating mode of the Heater Drains System has no effect on the Reactor Coolant System and the ability of the Condensate-Feedwater System to deliver feedwater to the steam generators in sufficient quantity to meet all system demands. However, some transient conditions can exist that do require proper interfacing between the heater drains system and other secondary cycle systems to prevent a reactor trip.

With all drains from the No. 3 heater drain tank being bypassed to the condenser (and being passed through the hotwell, demineralized condensate, and condensate booster pumps) the Condensate-Feedwater System can deliver approximately 82 percent (Unit 2) and 81.6 percent (Unit 1) guaranteed flow to the steam generators. Sufficient capacity does exist in the Condensate-Feedwater System pumps however, such that if the No. 3 heater drain pumps discharge exceeds 5500 gpm, full load operation for the unit can be maintained. However, due to TVA-imposed limitations, the Unit Main Turbine Generator will receive a signal to run the unit back to approximately 77% (Unit 2) and 76.6% (Unit 1) load if: (a) either No. 3 Heater Drain Tank bypass valve is open, (b) the main turbine generator is loaded to greater than approximately 82% (Unit 2) and 81.6% (Unit 1), and (c) after receiving a delayed indication of less than 5500 gpm from the discharge header of the No. 3 Heater Drain Tank Pumps.

Trip of a No. 3 heater drain pump during operation at unit load in excess of approximately 82 percent (Unit 2) and 81.6 percent (Unit 1) produces a low differential pressure across the No. 3 heater drain pump station (indicating that the remaining pumps are passing excessive flow and are in danger of damage due to insufficient NPSH). As a result, one of the two level control valves in the drain pump discharge is tripped closed for pump protection. This action may cause opening of the bypass to condenser valve and subsequent runback to the 77 percent (Unit 2) and 76.6 percent (Unit 1) load condition.

A trip of a No. 3 or No. 7 Heater Drain tank pump or a feedwater heater string isolation may require operator action to reduce load to maintain adequate Main Feedwater pump inlet pressure.

10.4.9.4 Inspection and Testing

All pumps, heaters, and pressure vessels in the Heater Drains, and Vents System will be tested by the manufacturer in accordance with the codes under which they were manufactured. Since there are no ASME, Section III components in this system, no inservice inspection is required.

10.4.9.5 Instrumentation

Sufficient instrumentation is provided to permit personnel to conveniently and safely operate this system and to provide proper interfacing with the Reactor Coolant System.

10.4.10 References

1. Letter from B. J. Garry of Westinghouse to P. G. Trudel of TVA dated June 6, 1991, TVA-91-170 (B25 910614 252).

2. Letter from B. J. Garry of Westinghouse to P. G. Trudel of TVA dated December 11, 1991, TVA-91-342 (B25 911226 001).

3. Technical Specification Change TVA-SQN-TS-02-06, Plant Systems, Condensate Storage Tank, 3/4.7.1.3; November 15, 2002.

4. TVA Letter TVFTI-071, Condensate Storage Tank Minimum Contained Volume Evaluation, dated November 4, 2002 (B38 021104 802).

5. Framatome ANP letter FANP-05-2506, SG Blowdown Isolation Logic Evaluation – Full Power AFW Test, dated July 21, 2005 (B38050721803).

TABLE 10.4.1-1

MAIN CONDENSER RADIOACTIVE MATERIAL ACTIVITY DURING POWER OPERATION AND SHUTDOWN

Isotope	Activity, µCi/gm
84_{Br}	0.12×10^{-8}
$85_{Kr}M$	0.0
85_{Kr}	0.0
87_{Kr}	0.0
88_{Kr}	0.0
88_{Rb}	0.14×10^{-7}
89_{Rb}	0.33×10^{-9}
89_{Sr}	0.60×10^{-6}
90_{Sr}	0.18×10^{-10}
91_{Sr}	$0.13 \times 10^{-9)}$
90Y	0.21×10^{-10}
91_{Y}	0.88×10^{-9}
$91_{Yi}M$	0.38×10^{-10}
99_{Mo}	0.73×10^{-6}
$99_{Tc}M$	0.43×10^{-6}
99_{TC}	0.36×10^{-14}
132_{Te}	0.37×10^{-7}
134_{Te}	0.24×10^{-9}
$133_{Xe}M$	0.0
133_{Xe}	0.0
$135_{Xe}M$	0.0
135_{Xe}	0.0
138_{Xe}	0.0
131_{I}	0.15×10^{-5}
132_{I}	0.21×10^{-6}
133_{I}	0.16×10^{-5}
134_{I}	0.25×10^{-7}
135_{I}	0.48×10^{-6}
134_{Cs}	0.33×10^{-7}
136_{Cs}	0.22×10^{-7}
137_{Cs}	0.17×10^{-6}
138_{Cs}	0.62×10^{-8}
$137_{Ba}M$	0.16×10^{-6}
140_{Ba}	0.66×10^{-9}
140_{La}	0.34×10^{-9}
144_{Ce}	0.44×10^{-10}
51_{Cr}	0.59×10^{-9}
54_{Mn}	0.50×10^{-9}
56_{Mn}	0.32×10^{-8}
59_{Fe}	0.66×10^{-9}
58_{Co}	0.16×10^{-7}
60_{Co}	0.48×10^{-9}

TABLE 10.4.7-1

CRITERIA FOR AUXILIARY FEEDWATER SYSTEM DESIGN BASIS CONDITIONS

Condition or Transient	Classification*	Criteria*	Additional Design Criteria
Loss of main feedwater	Condition II	Peak RCS pressure not to exceed design pressure. No consequential fuel failure	
Loss of Offsite Power (LOOP)	Condition II	(same as LMFW)	Pressurizer does not fill with 1 single motor-driven auxiliary feed pump feeding 2 SGs
Feedline rupture	Condition IV	10 CFR 100 dose limits. Containment design pressure not exceeded	Core does not uncover
Loss of all alternating curent power	NA	Note 1	Same as LOOP assuming turbine-driven pump. Station Blackout (SBO) Rule.
Loss of coolant	Condition III	10 CFR 100 dose limits 10 CFR 50 PCT limits	
	Condition IV	10 CFR 100 dose limits 10 CFR 50 PCT limits	
Cooldown	NA	Technical Specification Bases 3.7.6	100° F/hr 547° F to 350° F

*Ref: ANSI N18.2 (This information provided for those transients performed in the FSAR).

Note 1: Although this transient establishes the basis for AFW pump powered by a diverse power source, this is not evaluated relative to typical criteria since multiple failures must be assumed to postulate this transient.

TABLE 10.4.7-2

AUXILIARY FEEDWATER PUMP PARAMETERS

Total Number Per Unit	3
Electric Driven	2
Turbine Driven	1
Design Flow Rate, gpm	
Electric Driven, each	440
Turbine Driven	880
Design Pressure, psig	1650
Design Temperature, °F	40 to 120
Design Head, ft.	
Electric Driven, each	2900
Turbine Driven	2600

TABLE 10.4.7-3

SUMMARY OF SENSIBLE HEAT SOURCES

Primary Water Sources (initially at ESD power temperature and inventory)
- RCS fluid
- Pressurizer fluid (liquid and vapor)

Primary Metal Sources (initially at ESD power temperature)
- Reactor coolant piping, pumps, and reactor vessel
- Pressurizer
- Steam generator tube metal and tube sheet
- Steam generator metal below tube sheet
- Reactor vessel internals

Secondary Water Sources (initially at ESD power temperature and inventory)
- Steam generator fluid (liquid and vapor)
- Main feedwater purge fluid between steam generator and AFWS piping

Secondary Metal Sources (initially at ESD power temperature)
- All steam generator metal above tube sheet, excluding tubes.

TABLE 10.4.7-4 (Sheet 1)

AUXILIARY FEEDWATER FLOW [1] TO STEAM GENERATORS

FOLLOWING AN ACCIDENT/TRANSIENT WITH SELECTED SINGLE FAILURE - GAL/MIN

Single Failure

Accident/Transient	Elec. Train Failure A	TD Pump Failure B	MD Pump Failure C	LCV Failure TDAFP System D	LCV Failure MDAFP System E	Pr. Sw Failure MD F	CV[2] Failure G
1. Loss of main FW	1070	880	1070	1510	1510	1510	1540
2. Feedline rupture	(3)	440	(3)	440	440 (4)	440	440
3. Blackout	1070	880	1070	1510	1510	1510	1540
4. Cooldown	1070	880	1070	1510	1510	1510	1540
5. Main steamline rupture	(3)	440	(3)	440	440	440	440
6. Main steamline (flow through break)	<1440	<1440	<1440	<2250(5)	<1440	<1440	<1440

TABLE 10.4.7-4 (Sheet 2)

AUXILIARY FEEDWATER FLOW [1] TO STEAM GENERATORS

FOLLOWING AN ACCIDENT/TRANSIENT WITH SELECTED SINGLE FAILURE - GAL/MIN

Single Failure

Notes:

(1) Items 1 through 5 are minimum available flows to intact loops; item 6 is maximum possible flow to the faulted loop.

(2) Including only those CV's in the AFWS. "Failure" is interpreted as failure to close on reverse flow; failure of the CV to open to permit flow in the normal direction is not considered.

(3) Ten minute operator action is assumed to isolate AFW flow to faulted loop. After switchover to the bypass, LCV (MD pump) feeding the faulted loop, flow is ~200 gal/min to unfaulted loops; after operator action, flow is >1070 gal/min to unfaulted loops.

(4) Flow is >440 gal/min to one steam generator. After 10 minutes (with operator action to isolate AFW flow to faulted loop), total available flow will be >1070 gal/min.

(5) Maximum flow through mainsteam break is <2250 gal/min. This is based on a turbine runout protection failure (turbine runs up to its high speed stop) and not an LCV failure (TDAFP). For LCV failure (TDAFP), flow through break would be <1440 gal/min.

TABLE 10.4.7-5

AUXILIARY FEEDWATER SYSTEM COMPARISON
TO SRP 10.4.9 AND BTP ASB 10-1

The following comments evaluate the Sequoyah Auxiliary Feedwater System (AFWS) with respect to the acceptance criteria of SRP 10.4.9. The numbering corresponds to part II of SRP 10.4.9. Each requirement of SRP 10.4.9 has been previously addressed in the Sequoyah FSAR or in previous responses to NRC questions. Reference will be made to this existing material as appropriate.

1. GDC2 - See FSAR sections 10.4.7.2.1, 10.4.7.2.2, and 10.4.7.2.3.
2. GDC4 - See FSAR section 10.4.7.2.2.
3. GDC5 - See FSAR section 10.4.7.2.2.
4. GDC19 - See the entire FSAR section 10.4.7.2.
5. GDC44
   (a) Same as number 4 above.
   (b) See FSAR sections 10.4.7.2.1, 10.4.7.2.2, and 10.4.7.2.3.
   (c) The only nonessential portion of the auxiliary feedwater (AFW) is the condensate supply which is isolated from the remainder of the system by check valves. All components required to maintain the essential functions of the AFW, including isolation of disabled equipment, are self-actuated, automatic, or operable from the main control room. This information is included in FSAR sections 10.4.7.2.1, 10.4.7.2.2, and 10.4.7.2.3, but not explicitly stated. These statements are made here for clarification.
6. GDC45 - See FSAR section 10.4.7.2.4.
7. GDC46 - See FSAR sections 10.4.7.2.4 and 14.1, FSAR Table 14.1-1 and STS section 3/4.7.1.
8. RG 1.26 - System components were classified in accordance with the draft version of ANS 18.2 issued August 1970. A point-by-point comparison with RG 1.26 quality groups shows no significant differences for the AFW. See FSAR Sections 10.4.7.2.3, 10.4.7.2.4, 3.2.2; Figure 10.4.7-5, Tables 3.2.1-2, 3.2.2-1 and 3.2.2-2.
9. RG 1.29 - See FSAR sections 10.4.7.2.3 and 3.9.2.5.1.
10. RG 1.62 - See FSAR sections 10.4.7.2.2, 10.4.7.2.3, and 10.4.7.2.5.
11. RG 1.102 - See FSAR section 10.4.7.2.2 and 2.4A.
12. RG 1.117 - See FSAR section 10.4.7.2.2 and 3.5.
13. BTP ASB 3-1 and MEB 3-1 - See FSAR section 10.4.7.2.2 and TVA' EN DES Report No. 72-22, and CEB Report No. 76-3.
14. BTP ASB 10-1 - The AFW meets all requirements of this BTP as described in FSAR section 10.4.7 with one exception. Each AFW train cannot supply any combination of steam generators. Diverse means are provided to supply AFW to any steam generator. The steam-driven AFW pump delivers AFW to all four steam generators. Train A of the motor-driven supply delivers AFW to steam generators 1 and 2. Train B of the motor-driven supply delivers AFW to steam generators 3 and 4.

TABLE 10.4.7-6 (Sheet 1)

AFWS

RESPONSES TO SHORT- AND LONG-TERM RECOMMENDATIONS
RESULTING FROM A GENERAL NRC INVESTIGATION OF AFWS

Short-Term

1. Tech Spec time limit on one train out of service.

   Response:

   Technical Specification 3.7.1.2 limits operation with one train out of service to 72 hours.

2. Tech Spec on any single suction valves that can defeat system. Administrative control to lock open and verify position.

   Response:

   Administrative controls exist to lock open common suction valves from the CST. The ERCW system supplies safety grade backup suction.

3. Reevaluate commitments to limit AFW flow for reduction of water hammer effects.

   Response:

   The AFW flow rate will not be limited for any reasons related to the prevention or reduction of water hammer. The Sequoyah steam generator feedwater ring headers have been modified so that water hammer will not be a problem. On automatic start, the AFWS goes to full flow until normal water level is established on the steam generators.

4. Emergency procedure to connect backup water source.

   Response:

   Each auxiliary feedwater pump has its own safety grade instrumentation that will sense low pump suction pressure prior to draining of the normal water source and will automatically align the safety grade backup water source to the pump. Isolation from the normal water source occurs automatically by closure of a check valve in each pump suction line due to back pressure on the valve open alignment of the qualified water source. The qualified water source is essential raw cooling water.

Long-Term

1. Make manual start systems automatic.

   Response:

   The AFWS is fully automatic with manual actuation capability as well.

2. Provide a redundant path where primary and alternate water supplies pass through a single valve.

TABLE 10.4.7-6 (Sheet 2)

AFWS

RESPONSES TO SHORT- AND LONG-TERM RECOMMENDATIONS
RESULTING FROM A GENERAL NRC INVESTIGATION OF AFWS

Response:

Alternate water supplies to the AFW pump suctions do not share the same flow path with any valves in the normal water supply lines.

3. Eliminate dependence of one train of AFW on ac power.

Response:

The turbine-driven AFW pump can run for 4 hours during station blackout using only battery power for control and a dc powered room fan to remove heat from the pump room.

4. Prevent multiple pump damage due to loss of suction resulting from natural phenomena.

Response:

Pump damage is prevented by the automatic transfer to the alternate water source which is essential raw cooling water.

5. Upgrade auto start signal to safety grade.

Response:

The auto start signals for AFW are safety grade.

6. Emergency procedure for operator action for the AFWS in a total ac blackout.

Response:

Operator action for the AFWS in a total ac blackout is covered in Emergency Instructions.

7. Tech Spec AFWS flow verification following maintenance outage.

Response:

Technical Specification 4.7.1.2 requires that each AFW pump be demonstrated operable. (See also the response to item 12).

8. Upgrade auto start signal for AFWS.

Response:

There are three, safety grade, automatic start modes for the AFWS. They are loss of offsite power, safety injection actuation, and low-low steam generator level.

TABLE 10.4.7-6 (Sheet 3)

AFWS

RESPONSES TO SHORT- AND LONG-TERM RECOMMENDATIONS
RESULTING FROM A GENERAL NRC INVESTIGATION OF AFWS

9. Auto actuation of AFWS.

Response:

See response for item 8.

10. Redundant low level indication and alarm in MCR of primary water source.

Response:

There is a level indicator in the main control room for each condensate storage tank. Level alarms for each tank are actuated in the main control room for both "low" and "low-low" level. The "low-low" level is to warn of imminent tank emptying and occurs when sufficient water remains in the tank to allow for operator action in accordance with emergency procedures. In the event that the operator fails to align the AFW pumps to the secondary water source, they will automatically align.

11. 72-Hour pump endurance test.

Response:

The 72-hour recommendation has been reduced to 48 hours following discussion with the NRC staff. TVA is currently reviewing its records to determine if a pump endurance test has been performed. In the event that pump test information is not available, the appropriate tests will be performed to demonstrate the adequacy of the AFWS pumps. (A 48-hour endurance test was successfully performed and the test results were submitted to the NRC by L. M. Mills' letter dated November 4, 1980, to Harold R. Denton.)

12. Flow indication to each steam generator (same as 2.1.7b of NUREG 0578).

Response:

Auxiliary feedwater flow is indicated in the main control room for each of the four steam generators. The transmitters are mounted on four separate, seismically qualified panels and powered from power sources connected to the emergency power system. The cables are in low level signal conduits and are kept separate from all power cables. In addition, the total flow from the turbine-driven auxiliary feedwater pump is indicated in the main control room. The auxiliary feedwater flow instrument channels are powered from the emergency buses consistent with the diversity requirements of the AFWS.

13. Tech Spec for two-train systems which require valve realignment during surveillance testing.

Response:

The Sequoyah Nuclear Plant AFWS has three individual trains; one steam driven and two

Table 10.4.7-6 (Sheet 4)

AFWS

RESPONSE TO SHORT-AND LONG-TERM RECOMMENDATIONS
RESULTING FROM A GENERAL NRC INVESTIGATION OF AFWS

motor driven. These trains are characterized by parallel injection lines and open suction lines. The injection lines join together downstream of any control valve. In testing a given train, the control valves for that train only will be closed during testing. At power these valves are closed. For maintenance, only the control valves on the affected train would be disabled. For pump maintenance, the suction isolation valve for that pump would be closed. There are no common suction valves that must be closed for maintenance or testing.

Table 10.4.8-1 (Sheet 1)

FAILURE ANALYSIS, STEAM GENERATOR BLOWDOWN SYSTEM

Failure	Consequences	Action
(1) Rupture of blowdown line between steam generator and isolation valve inside containment.	Hot water under pressure partially flashes to steam. Pressure in lower compartment increases and vapor passes through ice beds. Water level in affected steam generator increases (swell). Radioactivity present in steam generator remains inside containment.	When containment pressure reaches the HI setpoint, SIS is initiated, reactor is automatically tripped, and containment isolation valves close. Main feedwater lines isolate and auxiliary feedwater pumps start. Blowdown isolation valves are automatically closed. If the break happens to be in a blowdown line between the isolation valve and the containment penetration, automatic closure of the isolation valves initiated by the containment pressure signal terminates the release. If the break is ahead of the isolation valve, when the fault is identified, auxiliary feedwater to the affected steam generator is isolated, and that steam generator is allowed to boil and drain itself dry.

Table 10.4.8-1 (Sheet 2)

FAILURE ANALYSIS, STEAM GENERATOR BLOWDOWN SYSTEM

Failure	Consequences	Action
(2) Rupture of blowdown line from outside containment to flash tank or heat exchangers.	Hot water under pressure escapes into main steam valve vault outside the building or inside the turbine building and partially flashes to steam. Some of the radioactive material in the blowdown will escape directly to atmosphere or be carried out with turbine building ventilation exhaust, depending on where the rupture occurs.	When the leak is discovered, the operator closes all blowdown isolation valves and then opens them one at a time to locate the leak. The unit is shutdown if necessary to repair the leak.
(3) Rupture of blowdown line downstream of flash tank or heat exchangers.	Water under pressure escapes into the turbine building and is collected by liquid waste system.	Same as (2)
(4) Failure of blowdown regulating valve.	Flow will increase to maximum value allowed by manual throttling valves.	When the failure is discovered, the blowdown isolation valves will be closed so that the regulating valve can be repaired.

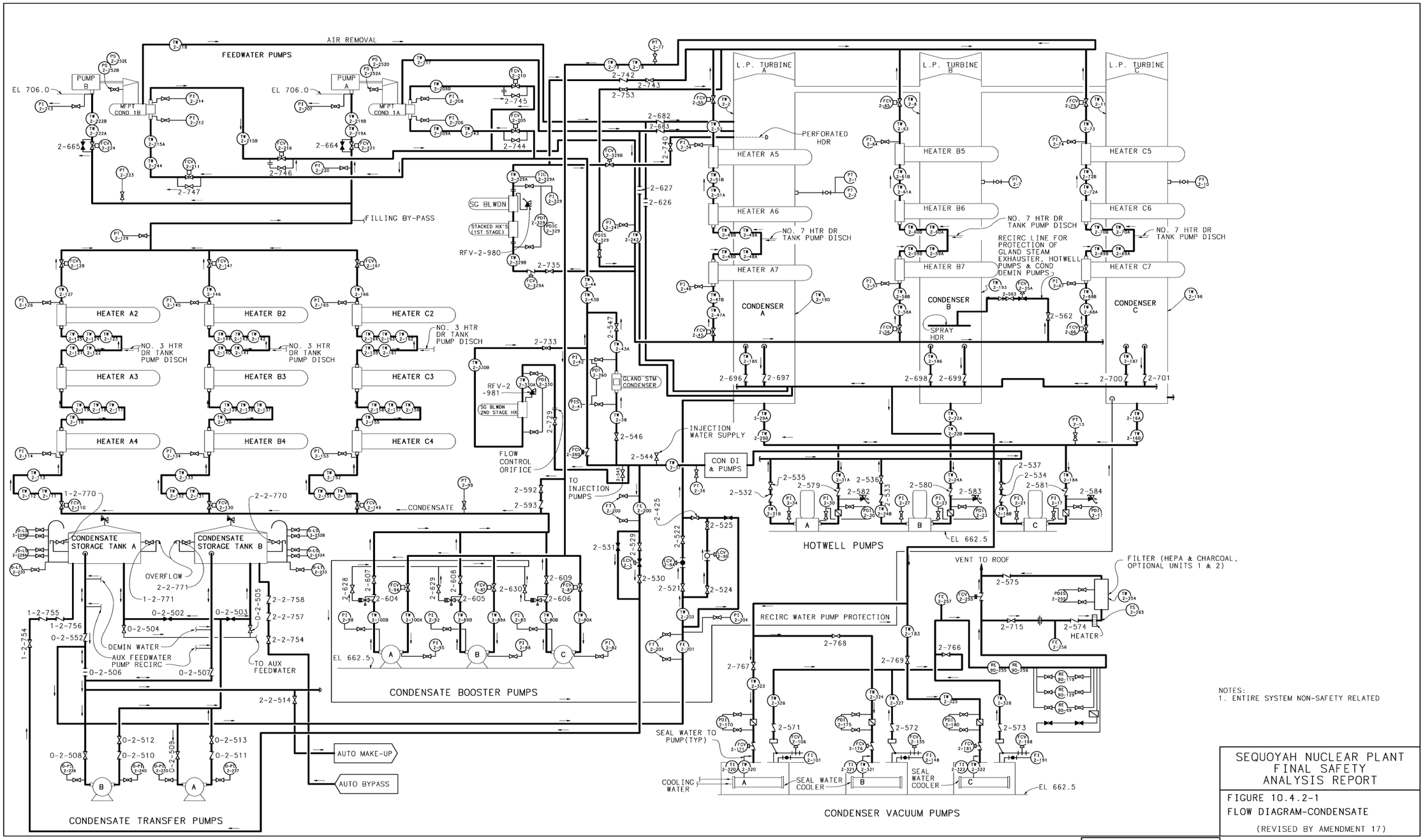

NOTES:
1. ENTIRE SYSTEM NON-SAFETY RELATED

SEQUOYAH NUCLEAR PLANT
FINAL SAFETY
ANALYSIS REPORT

FIGURE 10.4.2-1
FLOW DIAGRAM-CONDENSATE

(REVISED BY AMENDMENT 17)

CAD MAINTAINED DRAWING

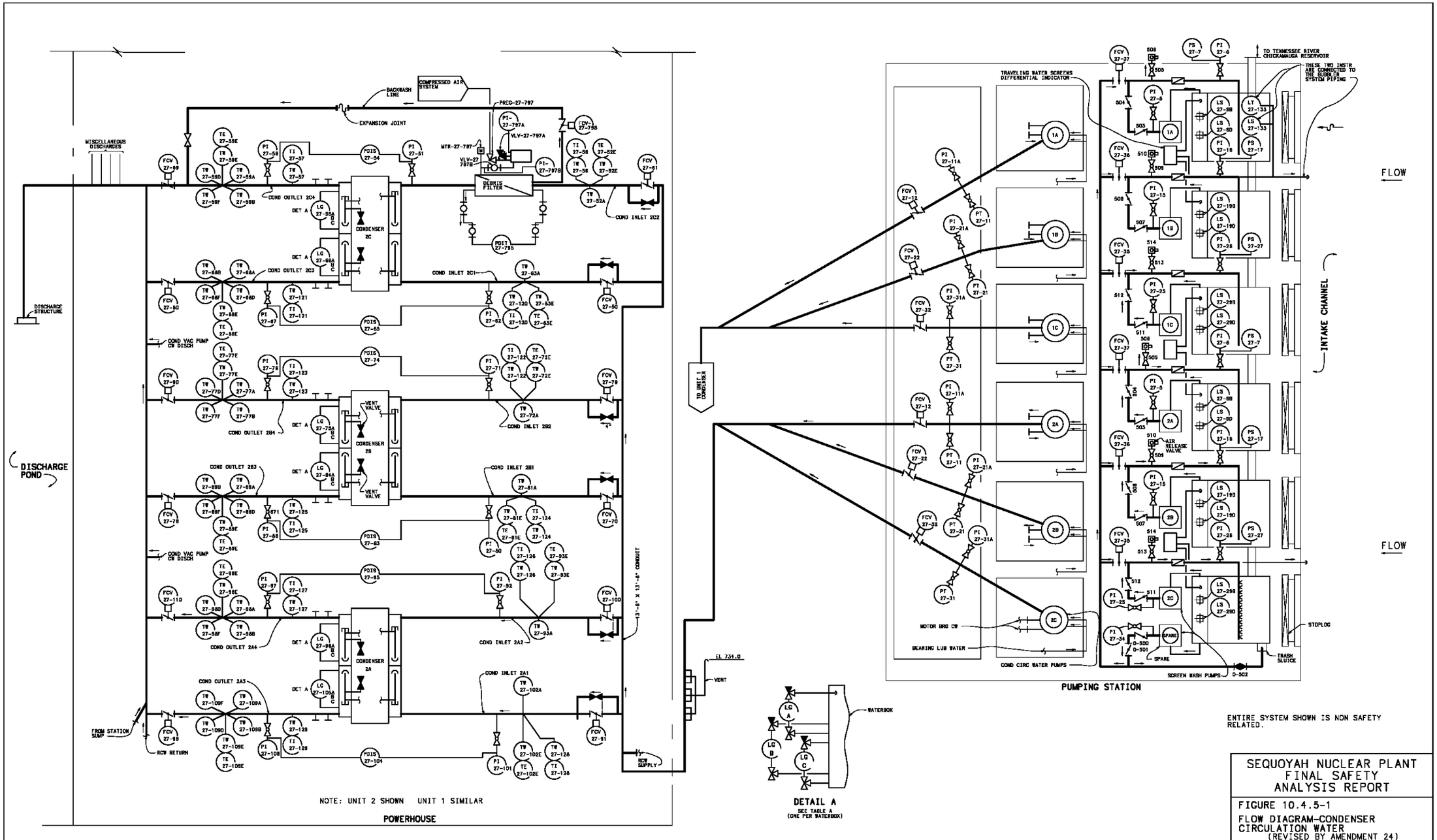
DISCHARGE POND
MISCELLANEOUS DISCHARGES
DISCHARGE STRUCTURE
COMPRESSED AIR SYSTEM
BACKWASH LINE
EXPANSION JOINT
DEBRIS FILTER
CONDENSER 2C
CONDENSER 2B
CONDENSER 2A
COND OUTLET 2C4
COND OUTLET 2C3
COND OUTLET 2B4
COND OUTLET 2B3
COND OUTLET 2A4
COND OUTLET 2A3
COND INLET 2C2
COND INLET 2C1
COND INLET 2B2
COND INLET 2B1
COND INLET 2A2
COND INLET 2A1
COND VAC PUMP CW DISCH
VENT VALVE
FROM STATION SUMP
RCW RETURN
RCW SUPPLY
13'-8" X 13'-8" CONDUIT
EL 734.0
VENT
NOTE: UNIT 2 SHOWN UNIT 1 SIMILAR
POWERHOUSE
TO UNIT 1 CONDENSER
TRAVELING WATER SCREENS DIFFERENTIAL INDICATOR
TO TENNESSEE RIVER CHICKAMAUGA RESERVOIR
THESE TWO INSTR. ARE CONNECTED TO THE BUBBLER SYSTEM PIPING
FLOW
INTAKE CHANNEL
AIR RELEASE VALVE
MOTOR BRG CW
BEARING LUB WATER
COND CIRC WATER PUMPS
SPARE
SCREEN WASH PUMPS
TRASH SLUICE
STOPLOG
PUMPING STATION
WATERBOX
DETAIL A
SEE TABLE A (ONE PER WATERBOX)
ENTIRE SYSTEM SHOWN IS NON SAFETY RELATED.
SEQUOYAH NUCLEAR PLANT
FINAL SAFETY ANALYSIS REPORT
FIGURE 10.4.5-1
FLOW DIAGRAM-CONDENSER CIRCULATION WATER
(REVISED BY AMENDMENT 24)
CAD MAINTAINED DRAWING

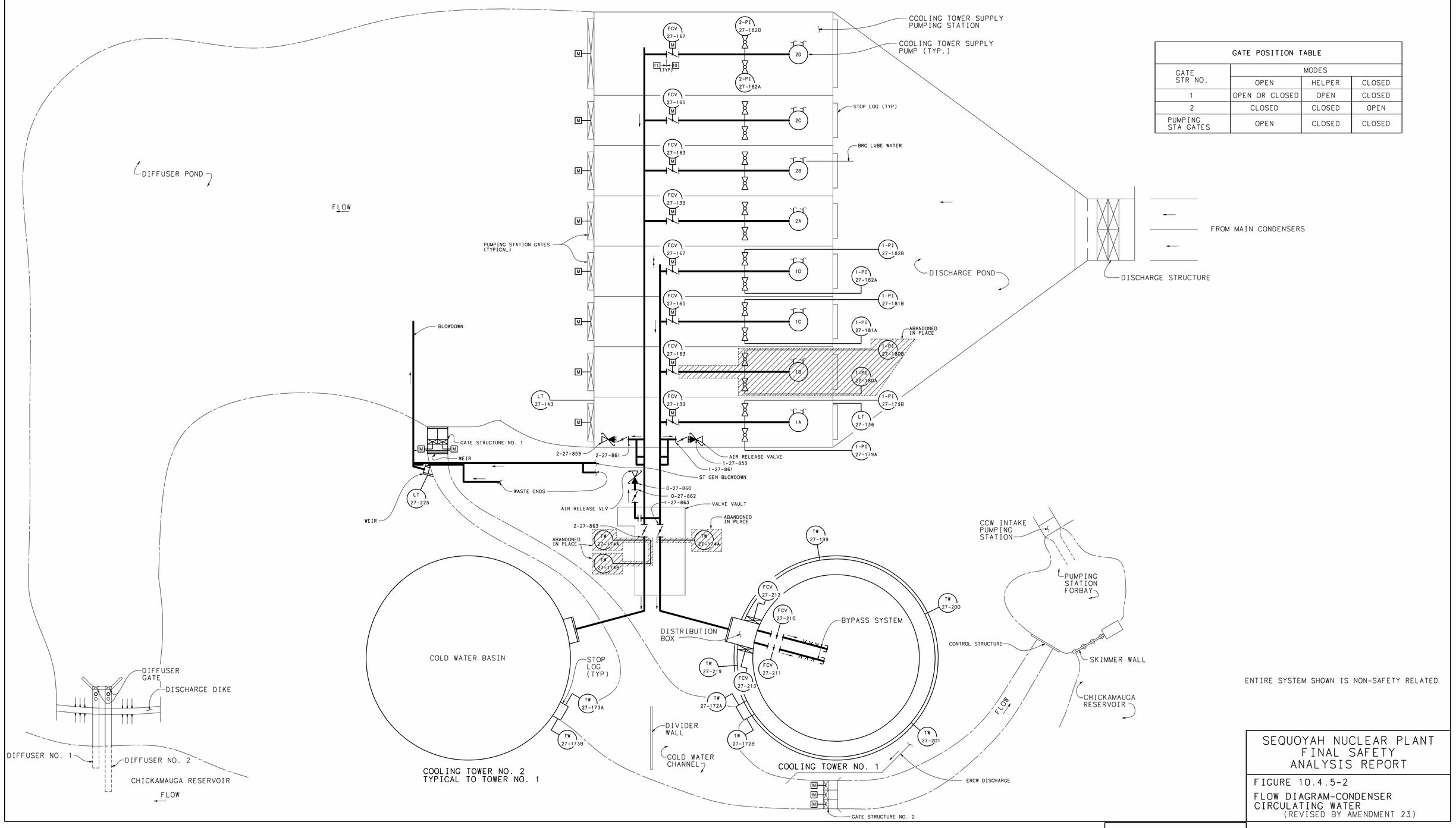

GATE POSITION TABLE			
GATE STR NO.	MODES		
	OPEN	HELPER	CLOSED
1	OPEN OR CLOSED	OPEN	CLOSED
2	CLOSED	CLOSED	OPEN
PUMPING STA GATES	OPEN	CLOSED	CLOSED

ENTIRE SYSTEM SHOWN IS NON-SAFETY RELATED

SEQUOYAH NUCLEAR PLANT
FINAL SAFETY
ANALYSIS REPORT

FIGURE 10.4.5-2

FLOW DIAGRAM-CONDENSER CIRCULATING WATER
(REVISED BY AMENDMENT 23)

CAD MAINTAINED DRAWING

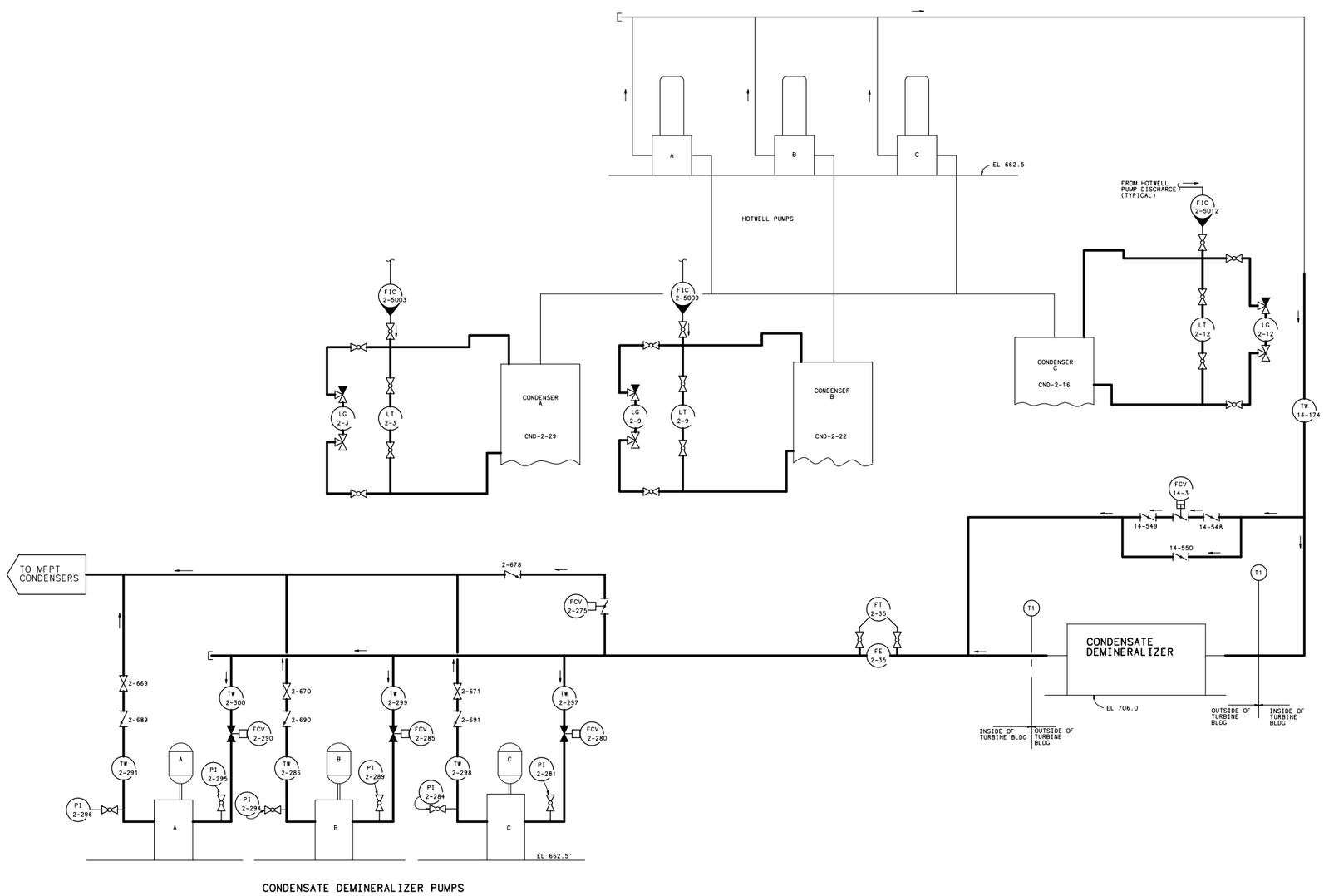

ENTIRE SYSTEM SHOWN IS NON SAFETY RELATED.

SEQUOYAH NUCLEAR PLANT
FINAL SAFETY
ANALYSIS REPORT

FIGURE 10.4.7-1
FLOW DIAGRAM-CONDENSATE

(REVISED BY AMENDMENT 29)

CAD MAINTAINED DRAWING

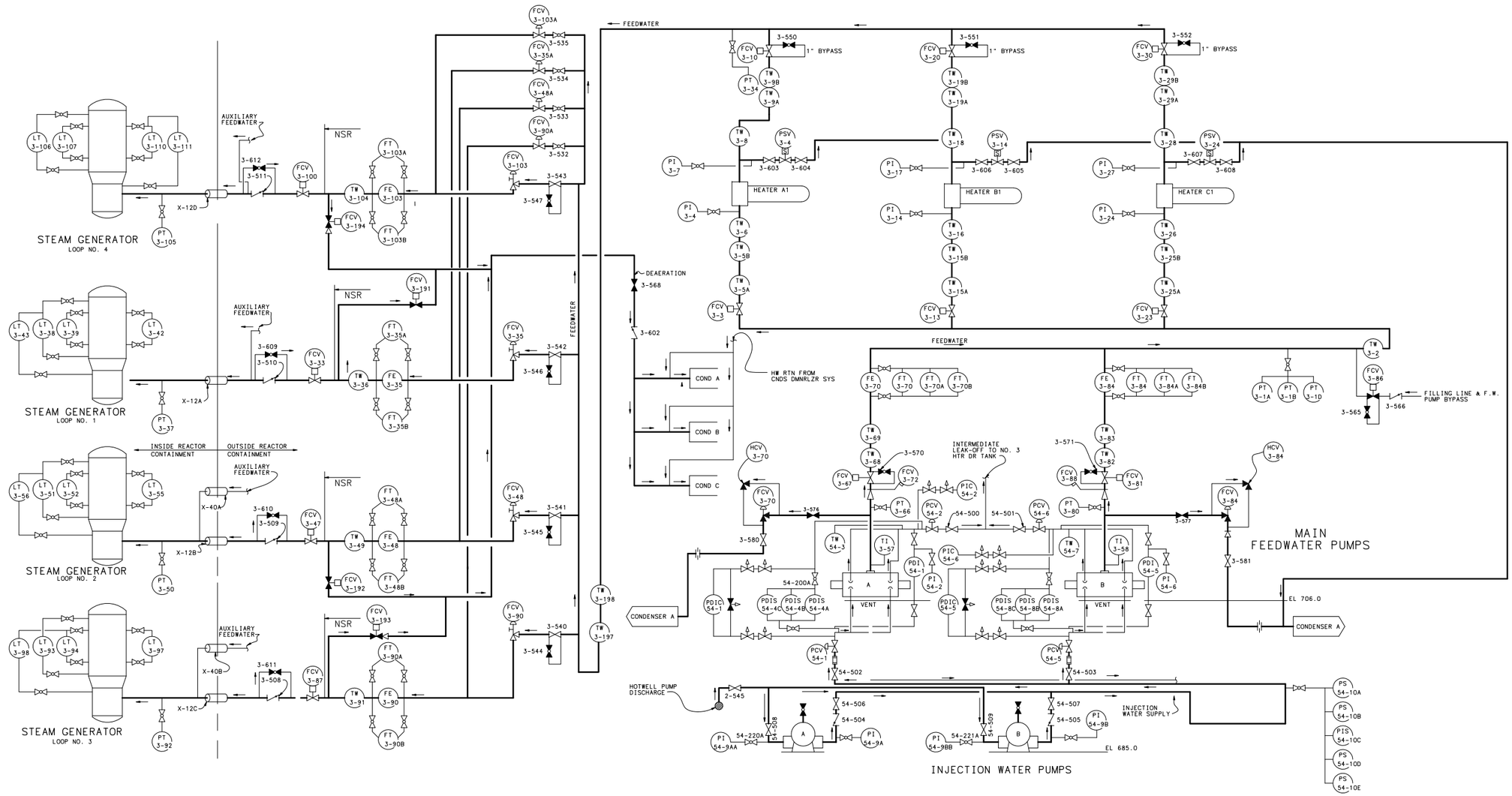

NOTES:
1. UNIT 1 SHOWN, UNIT 2 SIMILAR.
2. NSR DEFINES NON-SAFETY RELATED BOUNDARY.

SEQUOYAH NUCLEAR PLANT
FINAL SAFETY
ANALYSIS REPORT

FIGURE 10.4.7-2
FLOW DIAGRAM-FEEDWATER

(REVISED BY AMENDMENT 28)

CAD MAINTAINED DRAWING

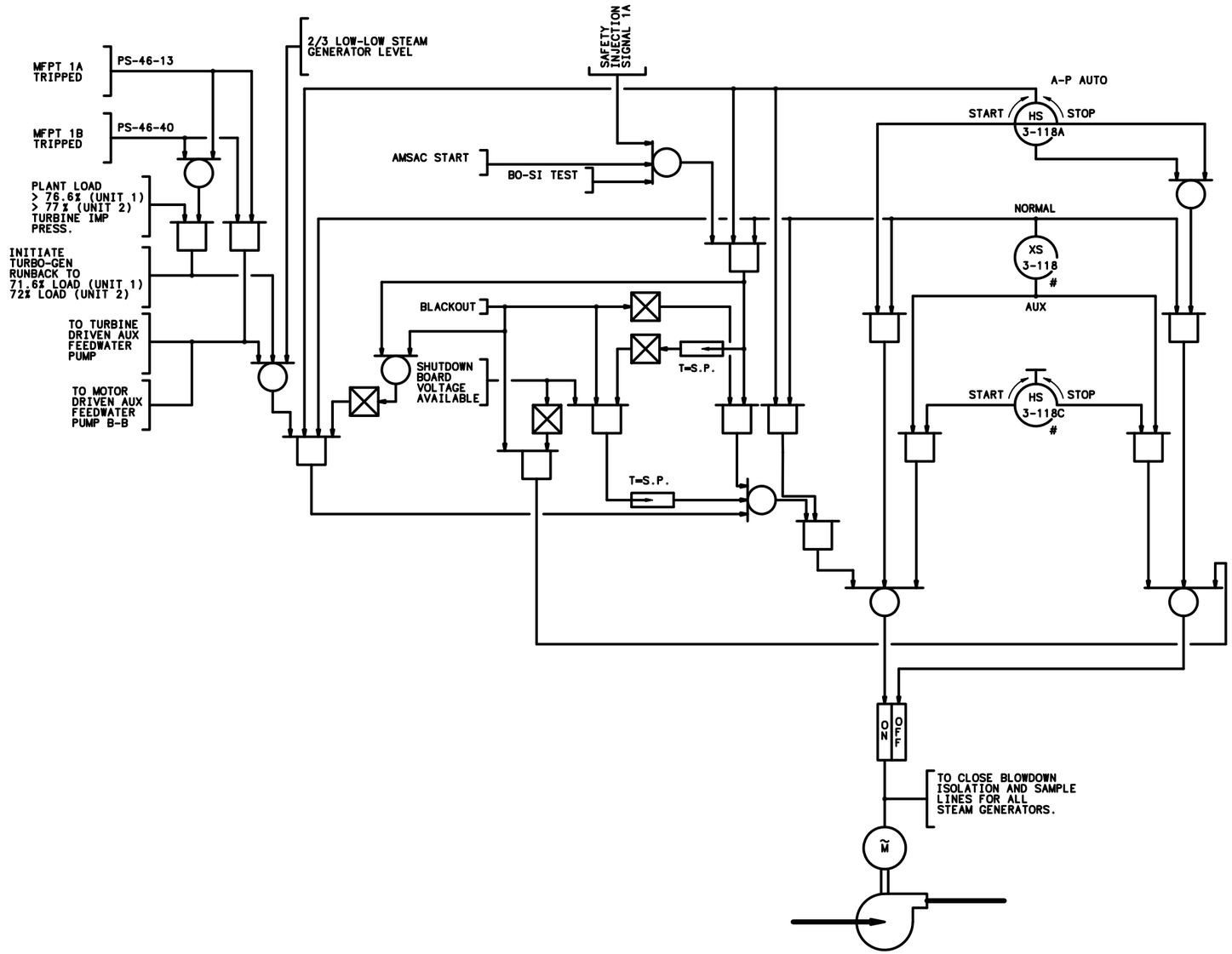

MOTOR DRIVEN
AUX FEEDWATER
PUMP A-A
PUMP B-B TYPICAL

SEQUOYAH NUCLEAR PLANT
FINAL SAFETY
ANALYSIS REPORT

FIGURE 10.4.7-3
MOTOR DRIVEN AUX FEEDWATER PUMP LOGIC
(REVISED BY AMENDMENT 30)

CAD MAINTAINED DRAWING

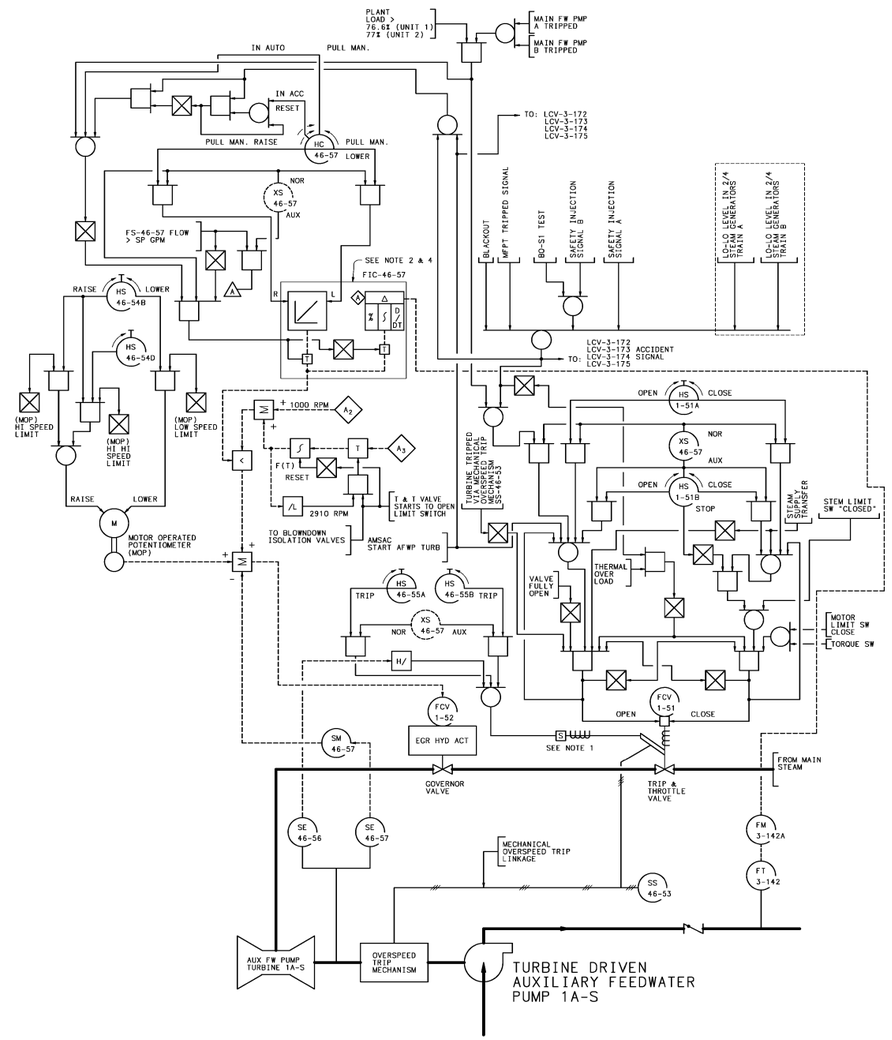

NOTES:

1. SOLENOID TRIP OPERATES AT 110% SPEED AND RESETS AUTOMATICALLY. MECHANICAL OVERSPEED OPERATES AT 122% SPEED AND MUST BE RESET MANUALLY.
2. MANUAL CONTROL WHEN IN THE AUXILIARY CONTROL MODE IS ACCOMPLISHED AT THE CONTROLLER.
3. ACCIDENT SIGNAL TO TRAIN A VALVES IS TR-A WITH TR-B BUFFERED. TR B VALVES WILL BE TR-B WITH TR-A BUFFERED.
4. MANUAL PUSHBUTTON ON FRONT FACE OF CONTROLLER TAKES PRECEDENCE OVER REMOTE AUTOMATIC SIGNAL. MCR INDICATING LIGHTS STATUS ACTUAL CONTROLLER MODE (AUTO OR MANUAL).

SEQUOYAH NUCLEAR PLANT
FINAL SAFETY
ANALYSIS REPORT

FIGURE 10.4.7-4
TURBINE DRIVEN AUX FEEDWATER PUMP LOGIC
(REVISED BY AMENDMENT 19)

CAD MAINTAINED DRAWING

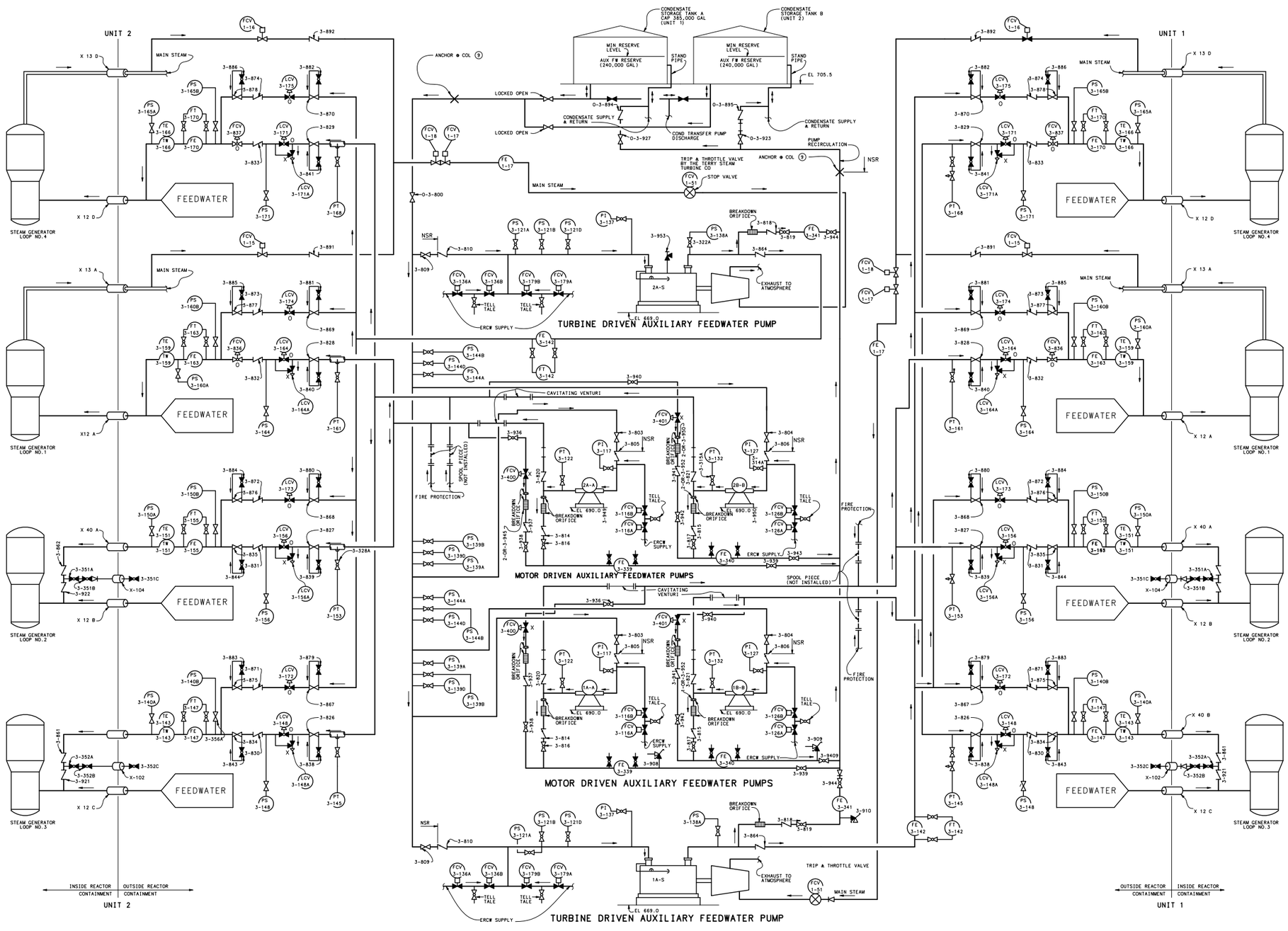

NSR DEFINES NON-SAFETY RELATED BOUNDARY
O VALVE FAILS OPEN
X VALVE FAILS CLOSED

SEQUOYAH NUCLEAR PLANT
FINAL SAFETY
ANALYSIS REPORT

FIGURE 10.4.7-5
FLOW DIAGRAM
AUXILIARY FEEDWATER
(REVISED BY AMENDMENT 28)

CAD MAINTAINED DRAWING

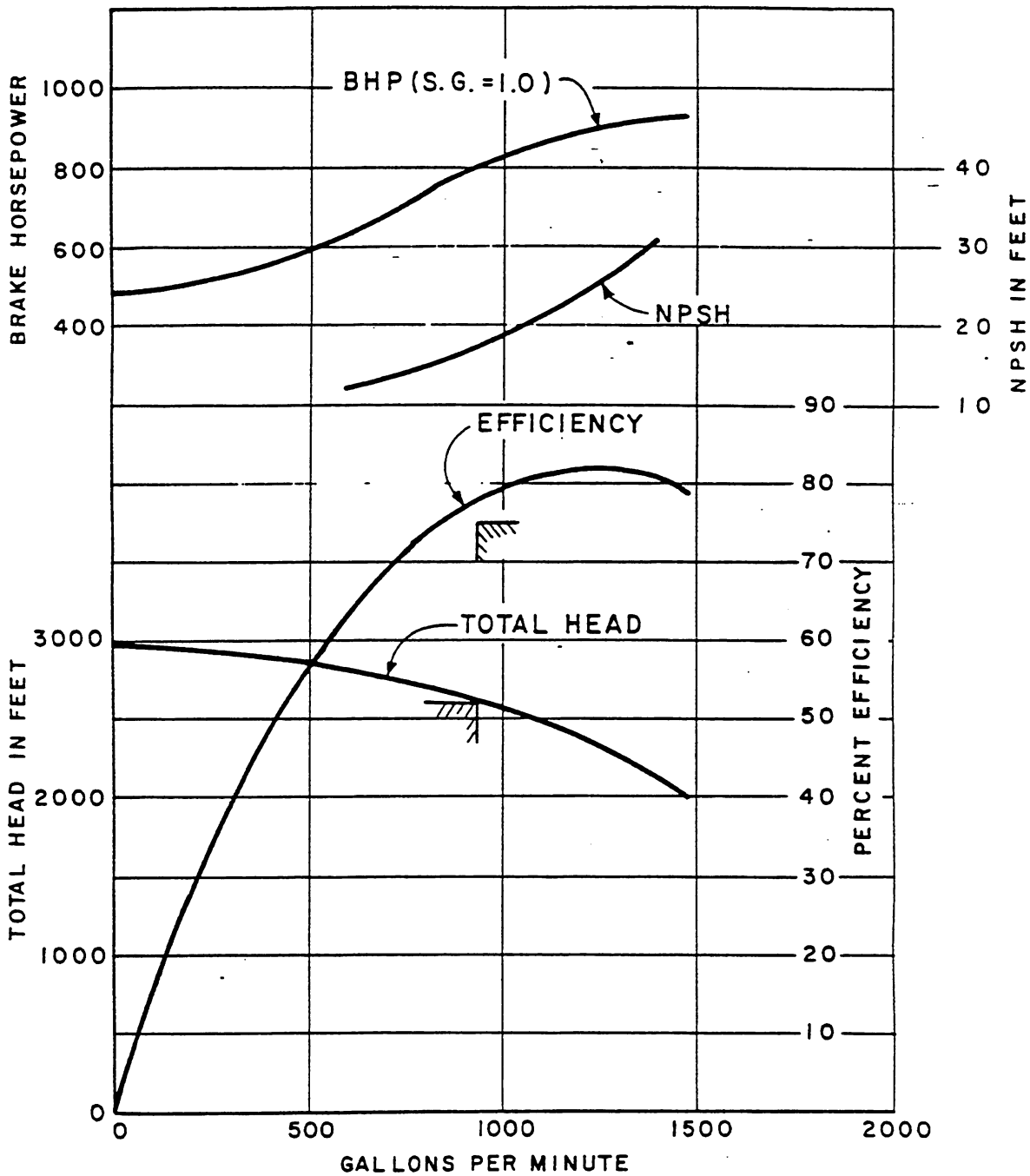

COMPOSITE OF TWO TEST CURVES

Figure 10.4.7-6 Pump Characteristics, Turbine - Driven Auxiliary Feedwater

Revised by Amendment 13

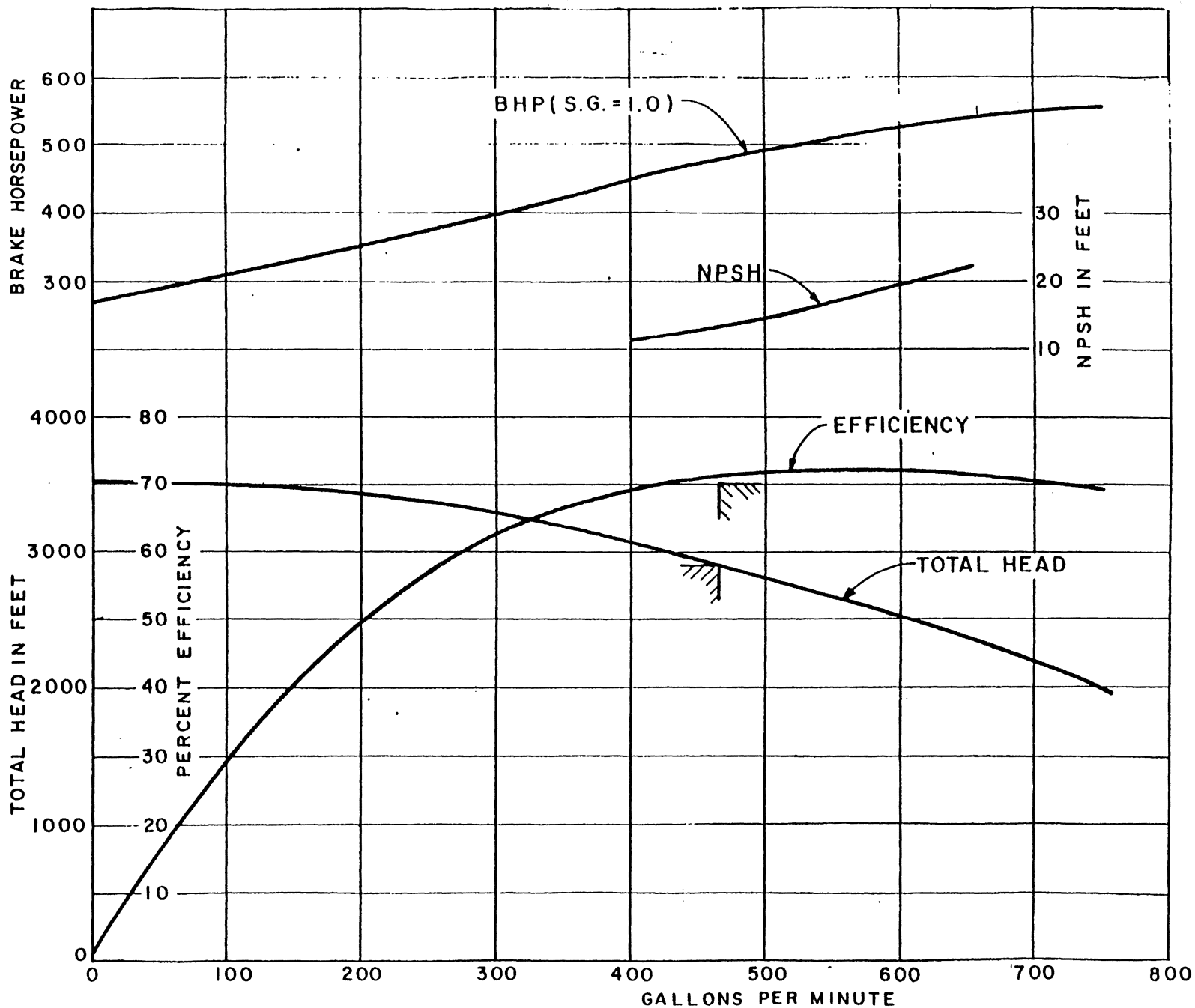

Composite of four test curves

Figure 10.4.7-7 Pump Characteristics, Motor-Driven Auxiliary Feedwater

Revised by Amendment 13

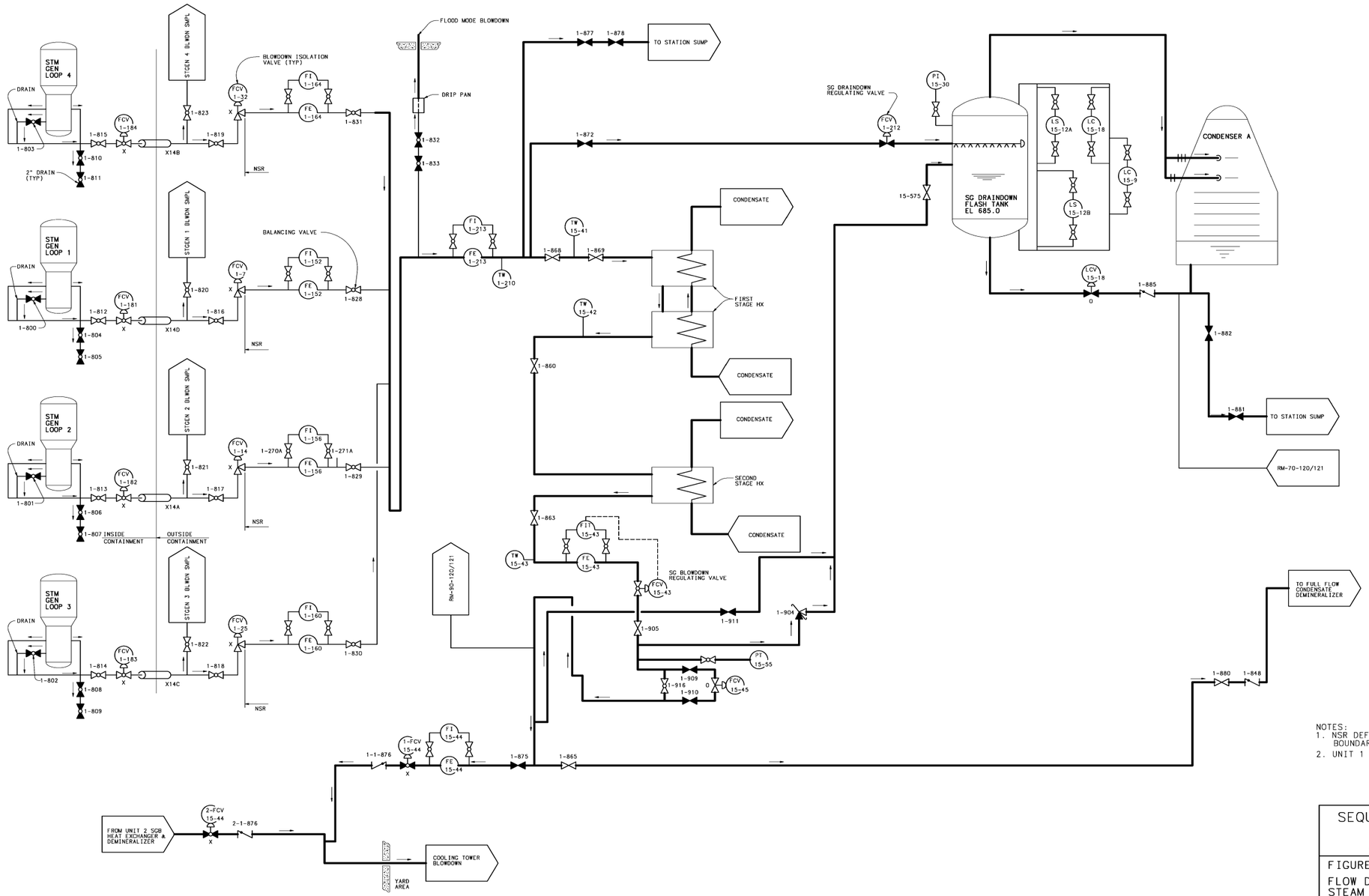

NOTES:
1. NSR DEFINES NON-SAFETY RELATED BOUNDARIES.
2. UNIT 1 SHOWN, UNIT 2 SIMILAR.

SEQUOYAH NUCLEAR PLANT
FINAL SAFETY
ANALYSIS REPORT

FIGURE 10.4.8-1

FLOW DIAGRAM
STEAM GENERATOR BLOWDOWN SYSTEM
(REVISED BY AMENDMENT 15)

DRAWING SERVICES UNIT
PROCAD MAINTAINED DRAWING
THIS CONFIGURATION CONTROL DRAWING IS MAINTAINED BY THE SQN CAD UNIT AND IS NOW PART OF THE TVA PROCADUM DATABASE.
COMPUTER GRAPHICS

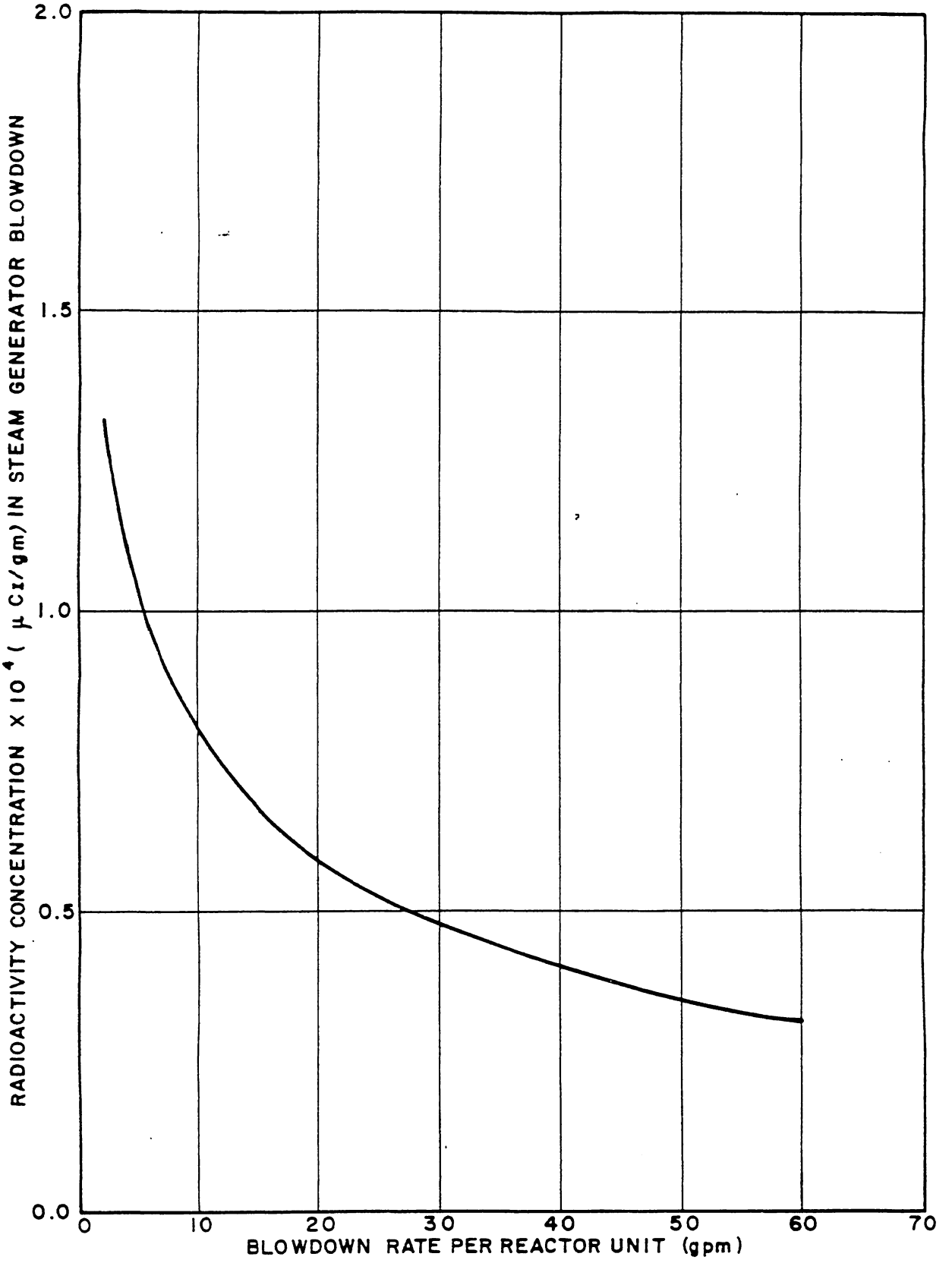

SEQUOYAH NUCLEAR PLANT
FINAL SAFETY
ANALYSIS REPORT

RADIOACTIVITY CONCENTRATIONS
IN THE SECONDARY SYSTEM
AS A FUNCTION OF STEAM
GENERATOR BLOWDOWN RATE

Figure 10.4.8-2

Revised by Amendment 13

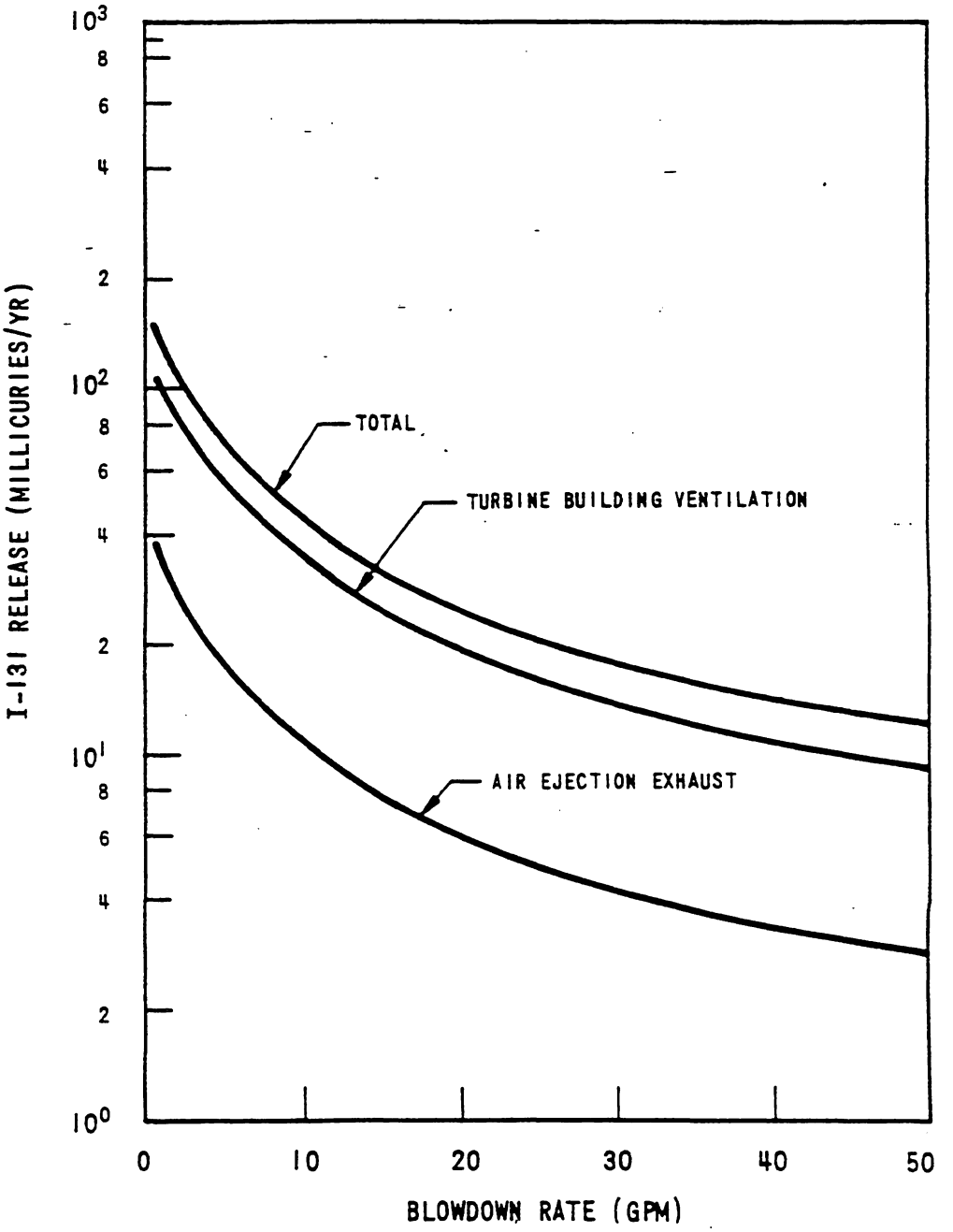

Figure 10.4.8-3 **Effect of Blowdown Rate on I-131 Release**

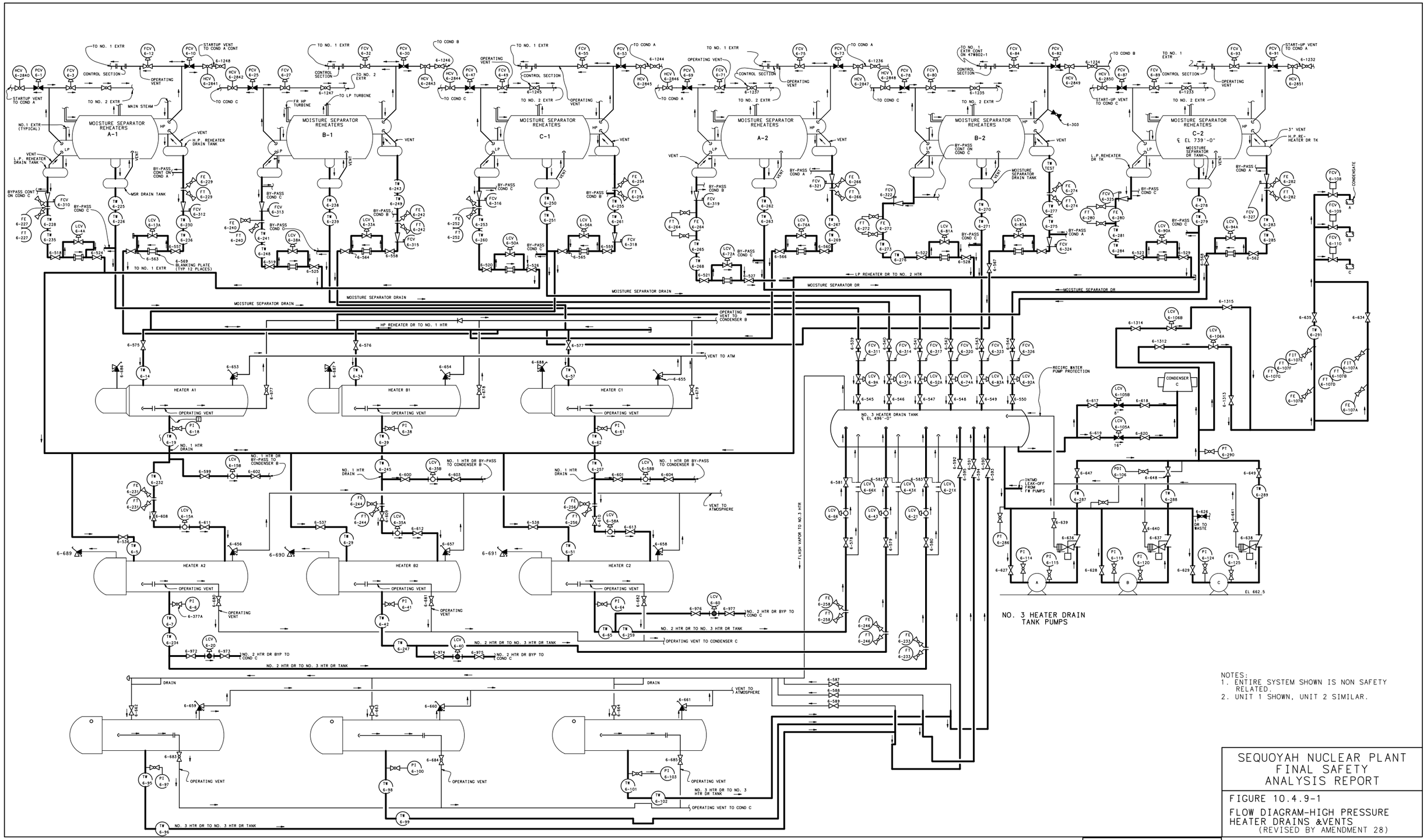

NOTES:
1. ENTIRE SYSTEM SHOWN IS NON SAFETY RELATED.
2. UNIT 1 SHOWN, UNIT 2 SIMILAR.

SEQUOYAH NUCLEAR PLANT
FINAL SAFETY
ANALYSIS REPORT

FIGURE 10.4.9-1

FLOW DIAGRAM-HIGH PRESSURE HEATER DRAINS &VENTS
(REVISED BY AMENDMENT 28)

CAD MAINTAINED DRAWING

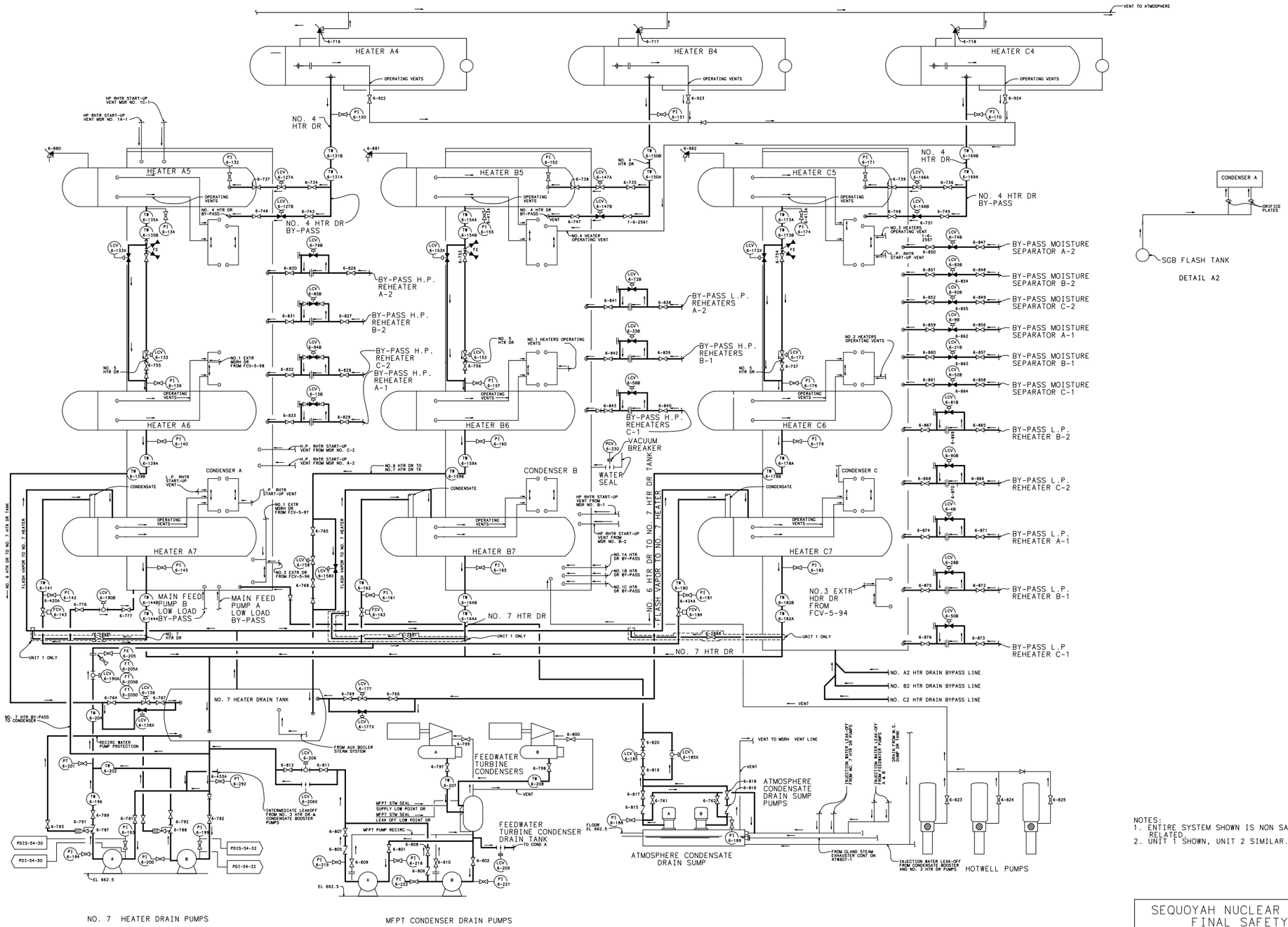

NOTES:
1. ENTIRE SYSTEM SHOWN IS NON SAFETY RELATED.
2. UNIT 1 SHOWN, UNIT 2 SIMILAR.

SEQUOYAH NUCLEAR PLANT
FINAL SAFETY
ANALYSIS REPORT

FIGURE 10.4.9-2

FLOW DIAGRAM LOW PRESSURE HEATER DRAINS & VENT
(REVISED BY AMENDMENT 28)

CAD MAINTAINED DRAWING

TABLE OF CONTENTS

Section	Title	Page
11.0	RADIOACTIVE WASTE MANAGEMENT	
11.1	SOURCE TERMS	11.1-1
11.1.1	RADIOACTIVITY	11.1-1
11.1.1.1	Design Activities in the Reactor Coolant	11.1-1
11.1.1.2	Volume Control Tank Activities	11.1-2
11.1.1.3	Pressurizer Activities	11.1-2
11.1.1.4	Gaseous Waste Processing System Activities	11.1-2
11.1.1.5	Secondary Coolant Design Activities	11.1-2
11.1.2	REALISTIC MODEL FOR RADIOACTIVITIES IN SYSTEMS AND COMPONENTS	11.1-2
11.1.3	LEAKAGE RATES	11.1-3
11.1.4	REFERENCES	11.1-3
11.2	LIQUID WASTE SYSTEMS	11.2-1
11.2.1	DESIGN OBJECTIVES	11.2-1
11.2.2	SYSTEM DESCRIPTIONS	11.2-1
11.2.3	SYSTEM DESIGN	11.2-4
11.2.3.1	Component Design	11.2-4
11.2.3.2	Instrumentation Design	11.2-9
11.2.4	OPERATING PROCEDURES	11.2-9
11.2.5	PERFORMANCE TESTS	11.2-16
11.2.6	ESTIMATED RELEASES	11.2-16
11.2.6.1	NRC Requirements	11.2-16
11.2.6.2	Expected Liquid Waste Processing System Releases	11.2-16
11.2.7	RELEASE POINTS	11.2-17
11.2.8	DILUTION FACTORS	11.2-17
11.2.9	ESTIMATED DOSES FROM RADIONUCLIDES IN LIQUID EFFLUENTS	11.2-18
11.2.9.1	Assumptions and Calculational Methods	11.2-18
11.2.9.2	Summary of Dose From Radionuclides in Liquid Effluents	11.2-20
11.3	GASEOUS WASTE SYSTEMS	11.3-1
11.3.1	DESIGN OBJECTIVES	11.3-1

TABLE OF CONTENTS

Section	Title	Page
11.3.2	SYSTEMS DESCRIPTIONS	11.3-1
11.3.3	SYSTEM DESIGN	11.3-2
11.3.3.1	Component Design	11.3-2
11.3.3.2	Instrumentation Design	11.3-3
11.3.4	OPERATING PROCEDURE	11.3-3
11.3.5	PERFORMANCE TESTS	11.3-5
11.3.6	ESTIMATED RELEASES	11.3-5
11.3.6.1	NRC Requirements	11.3-5
11.3.6.2	Expected Gaseous Waste Processing System Release	11.3-6
11.3.6.3	Releases from Ventilation Systems	11.3-6
11.3.6.4	Estimated Total Releases	11.3-6
11.3.7	RELEASE POINTS	11.3-6
11.3.8	ATMOSPHERIC DILUTION	11.3-8
11.3.9	ESTIMATED DOSES FROM RADIONUCLIDES IN GASEOUS EFFLUENTS	11.3-8
11.3.9.1	Assumptions and Calculational Methods	11.3-8
11.3.9.2	Summary of Annual Population Doses	11.3-10
11.3.10	REFERENCES	11.3-10
11.4	PROCESS AND EFFLUENT RADIOLOGICAL MONITORING SYSTEMS	11.4-1
11.4.1	DESIGN OBJECTIVES	11.4-1
11.4.2	CONTINUOUS MONITORING	11.4-1
11.4.2.1	Process and Effluent Liquid Monitors	11.4-2
11.4.2.2	Process and Effluent Gas Monitors	11.4-5
11.4.3	SAMPLING	11.4-10
11.4.4	CALIBRATION AND MAINTENANCE	11.4-10
11.4.5	REFERENCES	11.4-10
11.5	SOLID WASTE MANAGEMENT SYSTEM	11.5-1
11.5.1	DESIGN OBJECTIVES	11.5-1
11.5.2	SYSTEM INPUTS	11.5-1
11.5.3	SYSTEMS DESCRIPTION	11.5-1
11.5.3.1	Wet Active Waste Processing	11.5-1
11.5.3.2	Dry Active Waste Processing	11.5-2
11.5.3.3	Miscellaneous Waste Handling	11.5-2

TABLE OF CONTENTS

Section	Title	Page
11.5.4	EQUIPMENT OPERATION	11.5-3
11.5.4.1	Compactor Operation	11.5-3
11.5.4.2	Mobile Solidification System (MSS)	11.5-3
11.5.5	PACKAGING AND STORAGE	11.5-3
11.5.6	STORAGE FACILITIES	11.5-4
11.5.6.1	Inplant Radwaste Storage Area	11.5-4
11.5.6.2	Outside Radwaste Storage	11.5-4
11.5.6.3	Onsite Storage Facility (OSF)	11.5-5
11.5.7	SHIPMENT	11.5-5
11.6	OFFSITE RADIOLOGICAL MONITORING PROGRAM	11.6-1
11.6.1	EXPECTED BACKGROUND	11.6-1
11.6.2	CRITICAL PATHWAYS TO MAN	11.6-1
11.6.2.1	Doses from Gaseous Effluents	11.6-3
11.6.2.2	Internal Doses from Liquid Effluents	11.6-3
11.6.3	SAMPLING MEDIA, LOCATIONS, AND FREQUENCY	11.6-3
11.6.4	ANALYTICAL SENSITIVITY	11.6-4
11.6.5	DATA ANALYSIS AND PRESENTATION	11.6-5
11.6.6	PROGRAM STATISTICAL SENSITIVITY	11.6-5
APPENDIX 11A	TRITIUM CONTROL	11A-1

LIST OF TABLES

Number	Title
11.1.1-1	Parameters Used in the Calculation of Reactor Coolant Fission and Corrosion Product Design Activities
11.1.1-2	Reactor Coolant Equilibrium Fission and Corrosion Product Design Activities
11.1.1-3	Equilibrium Volume Control Tank Activities
11.1.1-4	Pressurizer Activities
11.1.1-5	Design Inventory in the Gaseous Waste Processing System
11.1.2-1	Parameters Used to Describe the Reactor System Realistic Basis
11.1.2-2	Specific Activities in Principal Fluid Streams Realistic Basis (μCi/gm)
11.1.2-3	Specific Activities in Primary Coolant Based on ANSI/ANS-18.1-1984 (μCi/gm)
11.1.2-4	Specific Activities in Secondary Side Coolant Based On ANSI/ANS-18.1-1984 (μCi/gm)
11.2.2-1	Liquid Waste Processing System Calculational Basis
11.2.2-2	Expected Total Isotopic Concentration Annul Releases from Components in the Liquid Waste Processing System Isotopic Concentration
11.2.3-1	Component Design Parameters
11.2.4-1	Range of Measured Decontamination Factors for Selected Isotopes
11.2.9-1	Tennessee River Drinking Water Supply Intakes Within 50 Miles Radius Downstream of the Sequoyah Nuclear Plant
11.2.9-2	Annual Doses to Man from Releases of Radioactivity to the Tennessee River (2020 Population)
11.3.2-1	Process Parameters and Expected Activities in Gaseous Waste System
11.3.2-2	Assumption Used in Calculating Expected System Activities and Releases from the Gaseous Waste System
11.3.3-1	Gaseous Waste Processing System Component Data
11.3.6-1	Release Study Input Parameters
11.3.6-2	Anticipated Annual Radioactive Gaseous Releases

LIST OF TABLES

Number	Title
11.3.9-1	Point of Interest Locations at Sequoyah Nuclear Plant
11.3.9-2	Milk Animal Locations at Sequoyah Nuclear Plant
11.3.9-3	Projected 2010 Population Distribution within 50 Miles of the Sequoyah Nuclear Plant
11.3.9-4	Sequoyah Nuclear Plant - Individual Doses per Unit from Gaseous Effluents
11.3.9-5	Summation of Population Doses
11.4.2-1	Process and Effluent Radiation Monitors - Liquid Media
11.4.2-2	Process and Effluent Radiation Monitors - Gaseous Media
11.4.2-3	Process and Effluent Radiation Monitor Displays
11.5.2-1	Maximum Anticipated Total Solid Waste Generated per Year
11.6.4-1	Detection Capabilities for Environmental Sample Analysis Lower Limit of Detection (LLD)

LIST OF FIGURES

Number	Title
11.2.2-1	Mechanical Flow Diagram- Waste Disposal System
11.2.2-2	Mechanical Flow Diagram- Waste Disposal System
11.3.2-1	Mechanical Flow Diagram- Waste Disposal System
11.3.2-2	Mechanical Flow Diagram- Waste Disposal System

11.0 RADIOACTIVE WASTE MANAGEMENT

11.1 Source Terms

The fission product inventory in the reactor core and the diffusion to the fuel pellet/cladding gap are provided in Subsection 15.1.7. The total fission product inventory released from the reactor core following a large break LOCA for environmental qualification per 10 CFR 50.49 analyses are provided in FSAR Table 15.5.3-8. Post large break LOCA source terms released from the reactor core used in the 10 CFR 100 off site public analyses and 10 CFR 50 Appendix A GDC-19 plant personnel analyses are provided in FSAR Table 15.5.3-5.

11.1.1 Radioactivity

11.1.1.1 Design Activities in the Reactor Coolant

The parameters used in the calculation of the reactor fission product design inventories together with the pertinent information concerning the design coolant cleanup flow rate and demineralizer effectiveness, are summarized in Table 11.1.1-1. The results of the calculations are presented in Tables 11.1.1-2 through 11.1.1-4. In these calculations the defective fuel rods are assumed to be present at the initial core loading and to be uniformly distributed throughout the core; thus, the fission product escape rate coefficients are based upon average fuel temperature.

For fuel failure and burnup experience see Subsection 4.2.1.3.

The fission product activities in the reactor coolant during operation with small cladding defects (fuel rods containing pinholes or fine cracks) are computed using the following differential equations:

for parent nuclides in the coolant:

$$\frac{dN_{wi}}{dt} = D\upsilon_i N_{Ci} - \left(\lambda_i + R\eta_i + \frac{B'}{B_o - tB'}\right) N_{wi}$$

for daughter nuclides in the coolant:

$$\frac{dN_{wj}}{dt} = D\upsilon_j N_{Cj} - \left(\lambda_j + R\eta_j + \frac{B'}{B_o - tB'}\right) N_{wj} + \lambda_i N_{wi}$$

symbols:

N = nuclide concentration

D = clad defects, as a fraction of rated core thermal power being generated by rods with clad defects coolant system volumes per sec.

R = purification flow, coolant system volumes per sec.

B_o = initial boron concentration, ppm

B′ = boron concentration reduction rate by feed and bleed, ppm per sec

η = removal efficiency of purification cycle for nuclide

λ = radioactive decay constant

υ = escape rate coefficient for diffusion into coolant

t = time

subscripts:

C = refers to core

w = refers to coolant

i = refers to parent nuclide

j = refers to daughter

11.1.1.2 Volume Control Tank Activities

Table 11.1.1-3 lists the activities in the volume control tank using the assumptions summarized in Table 11.1.1-1.

11.1.1.3 Pressurizer Activities

The activities in the pressurizer are separated between the liquid and the steam phase and the results obtained are given in Table 11.1.1-4 using the assumptions summarized in Table 11.1.1-1.

11.1.1.4 Gaseous Waste Processing System Activities

The activities to be found in the Gaseous Waste Processing System are given in Table 11.1.1-5.

11.1.1.5 Secondary Coolant Design Activities

The secondary cleanup system design activities used for shielding design calculations are discussed in Subsection 12.1.3.

11.1.2 Realistic Model for Radioactivities in Systems and Components

The parameters used to describe Sequoyah are given in Table 11.1.2-1, together with the range of values utilized in NUREG-0017 (Reference 1,3). All parameters other than the weight of water in the steam generator, steam generator blowdown rate, and the stripping fraction are within the prescribed range. In order to obtain primary coolant activities for fission products and transuranics, the correction formulae from standard ANS N237 (Reference 2), were applied. The activities of corrosion products, being independent of the failed fuel fraction assumed, are the same as in the design case.

Secondary side water and steam activities for fission products and transuranics were similarly obtained from the values given in N237 with the appropriate corrections. Secondary side corrosion product activities were calculated by applying the ratio of secondary-to-primary activity from the data in N237 to the primary side corrosion activities.

The primary coolant specific activities for calculations issued before April 30, 1987, are given in Table 11.1.2-2. The primary coolant activities used in calculations issued after April 30, 1987 are based on the new ANSI/ANS-18.1-1984 (Reference 4) standard and are given in Table 11.1.2-3. When a revision of sufficient degree is made to a calculation that was issued prior to April 30, 1987, primary coolant activities in accordance with the methodology of standard ANSI/ANS-18.1-1984 will be used. The ANSI-18.1-1984 activities are based on available data from operating plants for pressurized water reactors with U-tube steam generators such as SQN.

The secondary side coolant specific activities for calculations issued before June 27, 1996 are given in Table 11.1.2-2. The secondary side coolant activities used in calculations issued after June 27, 1996 are based on the new ANSI/ANS-18.1-1984 (See Reference 11.1.4.4 and 11.1.4.5) standard and are given in Table 11.1.2-4. When a revision of sufficient degree is made to a calculation that was issued prior to June 27, 1996, secondary side activities in accordance with the methodology of standard ANSI/ANS-18.1-1984 will be used.

11.1.3 Leakage Rates

As a necessary part of the effort to reduce effluent of radioactive liquid wastes, Westinghouse has been surveying various PWR facilities which are in operation, to identify design and operating conditions influencing reactor coolant and nonreactor grade leakage and hence the load on the Waste Processing System. Liquid leakage sources have been identified primarily in connection with pump shaft seals and valve stem leakage.

Where packed glands are provided, a leakage problem may be anticipated, while mechanical shaft seals provide essentially zero leakage. Valve stem leakage was experienced where the originally specified packing was used. A combination of a graphite filament yarn packing sandwiched with asbestos sheet packing is used with improved results in several plants. For Sequoyah, the majority of the valves used are diaphragm valves. This type of valve provides positive control stem leakage and is suitable for use as an isolation valve as well as a throttling valve.

Expected leakage rates of liquids to be treated in the Liquid Waste Processing System are summarized in Table 11.2.2-1.

Total plant liquid and gaseous releases are discussed in Subsections 11.2.6 and 11.3.6, respectively. Release pathways for gaseous effluents are described in Subsection 12.2.2.

11.1.4 References

1. USNRC NUREG-0017, Calculation of Releases of Radioactive Materials in Gaseous and Liquid Effluents from Pressurized Water Reactors, April 1976.

2. ANS N237-1976 (ANS -18.1), "Radioactive Materials in Principal Fluid Steams of Light-Water-Cooled Nuclear Power Plants," May 11, 1976.

3. USNRC NUREG-0017 R1, Calculation of Release of Radioactive Materials in Gaseous and Liquid Effluents from Pressurized Water Reactors, April 1985.

4. ANSI/ANS-18.1-1984, "Radioactive Source Term for Normal Operation of Light Water Reactors."

5. NE calculation, SQN-APS3-047 R2, Reactor Coolant Activities in Accordance With ANSI/ANS-18.1-1984.

6. Memorandum from Mike J. Lorek, Nuclear Engineering to J. D. Smith, Nuclear Licensing, dated May 5, 1997 (B38970505801). Subject - Historical PSAR Source Term Information contained in Chapters 11 and 12.

TABLE 11.1.1-1 (Sheet 1)

PARAMETERS USED IN THE CALCULATION OF REACTOR COOLANT FISSION AND CORROSION PRODUCT DESIGN ACTIVITIES

1.	Core thermal power, MWt (Base load)	3582
2.	Clad defects, as a percent of rated core thermal power being generated by rods with clad defects	1.0
3.	Reactor coolant liquid volume, ft^3	12,600
4.	Reactor coolant full power average temperature, °F	590
5.	Purification flow rate (normal) gal/min	75
6.	Effective cation demineralizer flow, gal/min	7.5
7.	Volume control tank volumes	
	a. Vapor, ft^3	240
	b. Liquid, ft^3	160
8.	Fission product escape rate coefficients:*	
	a. Noble gas isotopes, sec^{-1}	6.5×10^{-8}
	b. Br, I and Cs isotopes, sec^{-1}	1.3×10^{-8}
	c. Te isotopes, sec^{-1}	1.0×10^{-9}
	d. Mo isotopes, sec^{-1}	2.0×10^{-9}
	e. Sr and Ba isotopes, sec^{-1}	1.0×10^{-11}
	f. Y, La, Ce, Pr isotopes, sec^{-1}	1.6×10^{-12}
9.	Mixed bed demineralizer decontamination factors:	
	a. Noble gases and Cs-134, 136, 137, Y-90, 91, and Mo-99	1.0
	b. All other isotopes including corrosion products	10.0
10.	Cation bed demineralizer decontamination factor for Cs-134, 136, 137, Y-90, 91, and Mo-99	10.0

*Escape rate coefficients are based on fuel defect tests performed at the Saxton reactor. Recent experience at two plants operating with fuel rod defects has verified the listed escape rate coefficients.

TABLE 11.1.1-1 (Sheet 2)

PARAMETERS USED IN THE CALCULATION OF REACTOR COOLANT FISSION AND CORROSION PRODUCT DESIGN ACTIVITIES

11. Volume control tank noble gas stripping fractions

Isotope	Stripping fraction
Kr-85	2.3×10^{-5}
Kr-85m	2.7×10^{-1}
Kr-87	6.0×10^{-1}
Kr-88	4.3×10^{-1}
Xe-131m	7.1×10^{-3}
Xe-133	1.6×10^{-2}
Xe-133m	3.7×10^{-2}
Xe-135	1.8×10^{-1}
Xe-135m	8.0×10^{-1}
Xe-138	1.0

12.	Boron concentration and reduction rates	
	a. B_o (initial cycle)	860 ppm
	B' (initial cycle)	3.0 ppm/day
	b. B_o (equilibrium cycle)	1200 ppm
	B' (equilibrium cycle)	4.0 ppm/day
13.	Pressurizer volumes	
	a. Vapor	720 ft^3
	b. Liquid	1080 ft^3
14.	Spray line flow	1.0 gal/min
15.	Pressurizer stripping fractions	
	a. Noble gases	1.0
	b. All other elements	0

Refer to FSAR Reference 11.1.4.6.

TABLE 11.1.1-2 (Sheet 1)

REACTOR COOLANT EQUILIBRIUM FISSION AND CORROSION PRODUCT DESIGN ACTIVITIES

Isotope	Activity μCi/gm
Br-84	4.2×10^{-2}
Rb-88	3.7
Rb-89	1.0×10^{-1}
Sr-89	3.8×10^{-3}
Sr-90	1.1×10^{-4}
Sr-91	1.9×10^{-3}
Y-90	1.3×10^{-4}
Y-91	5.5×10^{-3}
Y-92	7.3×10^{-4}
Zr-95	6.7×10^{-4}
Nb-95	6.4×10^{-4}
Mo-99	5.3
I-131	2.5
I-132	9.0×10^{-1}
I-133	4.0
I-134	5.6×10^{-1}
I-135	2.2
Te-132	2.6×10^{-1}
Te-134	2.9×10^{-2}
Cs-134	2.1×10^{-1}
Cs-136	1.4×10^{-1}
Cs-137	1.0
Cs-138	9.5×10^{-1}

TABLE 11.1.1-2 (Sheet 2)

REACTOR COOLANT EQUILIBRIUM FISSION AND CORROSION PRODUCT DESIGN ACTIVITIES

Isotope	Activity μCi/gm
Ba-140	4.2×10^{-3}
La-140	1.5×10^{-3}
Ce-144	2.7×10^{-4}
Pr-144	2.7×10^{-4}
Kr-85	4.7 (Peak)
Kr-85m	2.2
Kr-87	1.2
Kr-88	3.7
Xe-131m	1.9
Xe-133	2.88×10^{2}
Xe-133m	3.2
Xe-135	6.3
Xe-135m	1.9×10^{-1}
Xe-138	6.8×10^{-1}
Mn-54*	7.7×10^{-4}
Mn-56*	2.9×10^{-2}
Co-58*	2.5×10^{-2}
Co-60*	7.4×10^{-4}
Fe-59*	1.0×10^{-3}
Cr-51*	9.3×10^{-4}

*Corrosion product activities based on activity levels measured at operating reactors.

N-16 activity is not included as it does not serve as a source term for the Waste Processing System.

Refer to FSAR Reference 11.1.4.6.

TABLE 11.1.1-3

EQUILIBRIUM VOLUME CONTROL TANK ACTIVITIES
(Based on parameters given in Table 11.1.1-1)

Isotope	Vapor activity (Curies)
Kr-85	7.6
Kr-85m	5.6×10^{1}
Kr-87	2.2×10^{1}
Kr-88	1.1×10^{2}
Xe-131m	8.8×10^{1}
Xe-133	1.4×10^{4}
Xe-133m	1.5×10^{2}
Xe-135	2.5×10^{2}
Xe-135m	less than 1
Xe-138	4.6
	Liquid activity (Curies)
I-131	1.1
I-132	0.41
I-133	1.8
I-134	0.26
I-135	1.0

Refer to FSAR Reference 11.1.4.6.

TABLE 11.1.1-4

PRESSURIZER ACTIVITIES

Isotope	Vapor activity (μCi/cc)
Kr-85	5.1×10^{1}
Kr-85m	1.0×10^{-1}
Kr-87	1.8×10^{-2}
Kr-88	1.2×10^{-1}
Xe-131m	4.7
Xe-133	3.6×10^{-2}
Xe-133m	1.8
Xe-135	6.5×10^{-1}
Xe-135m	5.0×10^{-4}
Xe-138	2.2×10^{-3}

Isotope	Liquid activity (μCi/gm)
Rb-88	1.1×10^{-2}
Mo-99	2.2
I-131	1.6
I-132	2.0×10^{-2}
I-133	0.7
I-134	5.5×10^{-3}
I-135	0.14
Cs-137	1.3
Cs-138	5.5×10^{-3}

Refer to FSAR Reference 11.1.4.6.

TABLE 11.1.1-5

DESIGN INVENTORY IN THE GASEOUS WASTE PROCESSING SYSTEM
Single Unit

Isotope	Activity† (Curies)
Kr-85	4.4×10^{3}††
Kr-85m	6.2×10^{2}
Kr-87	3.3×10^{2}
Kr-88	1.1×10^{3}
Xe-131m	5.7×10^{2}
Xe-133	8.7×10^{4}
Xe-133m	9.7×10^{2}
Xe-135	1.9×10^{3}
Xe-135m	4.8×10^{1}
Xe-138	1.8×10^{2}

Refer to FSAR Reference 11.1.4.6.

†For two units the activities are double

††Represents the inventory of Kr-85 released to the reactor coolant during one year of full power operation. The remaining isotopes are equilibrium values.

TABLE 11.1.2-1

PARAMETERS USED TO DESCRIBE THE REACTOR SYSTEM REALISTIC BASIS

Parameters	Symbol	Units	Range Maximum	Range Minimum	Sequoyah
Thermal power	P	MWt	3800	3000	3582
Steam flow rate	FS	lbs/hr	1.7E7	1.3E7	1.5E7
Weight of water in reactor coolant system	WP	lbs	6.0E5	5.0E5	5.4E5
Weight of water in all steam generators	WS	lbs	5.0E5	4.0E5	3.48E5
Reactor coolant letdown flow (purification)	FD	lbs/hr	4.2E4	3.2E4	3.7E4
Reactor coolant letdown flow (yearly average for boron control)	FB	lbs/hr	1000	250	845
Steam generator blowdown flow (total)	FBD	lbs/hr	100,000	50,000	30,000
Fraction of radioactivity in blowdown stream which is not returned to the secondary coolant system	NBD	-	1.0	0.9	1.0
Flow through the purification system cation demineralizer	FA	lbs/hr	7500	0.0	3.7E3
Ratio of condensate demineralizer flow rate to the total steam flow rate	NC	-	0.75	0.55	0.55
Ratio of the total amount of noble gases routed to gaseous radwaste from the purification system to the total amount of noble gases routed to the primary coolant system from the purification system (not including the boron recovery system)	Y	-	0.01	0.0	0.0

Refer to FSAR Reference 11.1.4.6.

TABLE 11.1.2-2 (Sheet 1)

SPECIFIC ACTIVITIES IN PRINCIPAL FLUID STREAMS

REALISTIC BASIS (μCi/gm)

Isotope	Reactor Coolant (a)	Secondary Coolant* Water (b)	Secondary Coolant* Steam (c)
	Class 1 Noble Gases		
Kr 83M	2.3E-02	0.0	6.2E-09
Kr 85M	1.1E-01	0.0	3.1E-08
Kr 85	9.2E-02	0.0	2.6E-08
Kr 87	6.4E-02	0.0	1.7E-08
Kr 88	2.0E-01	0.0	5.6E-08
Kr 89	5.8E-03	0.0	1.6E-09
Xe 131M	8.0E-02	0.0	2.3E-08
Xe 133M	1.8E-01	0.0	5.0E-08
Xe 133	1.4E+01	0.0	3.8E-06
Xe 135M	1.5E-02	0.0	4.1E-09
Xe 135	3.3E-01	0.0	9.1E-08
Xe 137	1.0E-02	0.0	2.9E-09
Xe 138	5.0E-02	0.0	1.4E-08
	Class 2 Halogens		
Br 83	5.4E-03	8.4E-08	8.4E-10
Br 84	3.0E-03	1.6E-08	1.6E-10
Br 85	3.5E-04	2.8E-10	2.8E-12
I 130	2.3E-03	6.1E-08	6.1E-10
I 131	2.8E-01	8.1E-06	8.1E-08
I 132	1.1E-01	2.3E-06	2.3E-08
I 133	4.1E-01	1.2E-05	1.2E-07
I 134	5.4E-02	4.5E-07	4.5E-09
I 135	2.1E-01	4.8E-06	4.8E-08
	Class 3 Cs, Rb		
Rb 86	8.9E-05	1.0E-08	1.0E-11
Rb 88	2.3E-01	8.8E-07	8.8E-10
Cs 134	2.6E-02	2.7E-06	2.7E-09
Cs 136	1.4E-02	1.5E-06	1.5E-09
Cs 137	1.9E-02	2.2E-06	2.2E-09
	Class 4 Water Activation Products		
N 16	4.0E+01	1.0E-06	1.0E-07

TABLE 11.1.2-2 (Sheet 2)
(Continued)

SPECIFIC ACTIVITIES IN PRINCIPAL FLUID STREAMS

REALISTIC BASIS (μCi/gm)

Isotope		Reactor Coolant (a)	Secondary Coolant* Water (b)	Secondary Coolant* Steam (c)
		Class 5 Tritium		
H	3	1.0E+00	1.0E-03	1.0E-03
		Class 6 Other Isotopes		
Cr	51	9.3E-04	4.0E-08	4.0E-11
Mn	54	7.7E-04	5.0E-08	5.0E-11
Fe	59	1.0E-03	6.0E-08	6.0E-11
Co	58	2.5E-02	1.0E-06	1.0E-09
Co	60	7.4E-04	3.0E-08	3.0E-11
Sr	89	3.6E-04	4.7E-08	4.7E-12
Sr	90	1.0E-05	9.4E-10	9.4E-13
Sr	91	7.1E-04	9.9E-09	9.9E-12
Y	90	1.8E-05	9.1E-10	9.1E-13
Ym	91	4.4E-04	4.5E-09	4.5E-12
Y	91	2.1E-03	2.1E-07	2.1E-10
Y	93	1.4E-04	4.0E-09	4.0E-12
Zr	95	6.2E-05	9.3E-09	9.3E-12
Nb	95	5.1E-05	9.3E-09	9.3E-12
Mo	99	4.7E-01	1.6E-05	1.6E-08
Tc	99M	4.2E-01	1.1E-05	1.1E-08
Ru	103	4.6E-05	4.7E-09	4.7E-12
Ru	106	1.0E-05	9.4E-10	9.4E-13
Rh	103M	5.1E-05	3.0E-09	3.0E-12
Rh	106	1.2E-05	5.5E-10	5.5E-10
Te	125M	3.0E-05	1.4E-09	1.4E-12
Te	127M	2.9E-04	2.3E-08	2.3E-11
Te	127	9.3E-04	5.9E-08	4.9E-11
Te	129M	1.4E-03	1.4E-07	1.4E-10
Te	129	1.8E-03	9.2E-08	9.2E-11
Te	131M	2.7E-03	2.2E-07	2.2E-10
Te	131	1.3E-03	2.9E-08	2.9E-11
Te	132	2.8E-02	2.3E-06	2.3E-09
Ba	137M	1.8E-02	1.2E-06	1.2E-09
Ba	140	2.3E-04	2.3E-08	2.3E-11
La	140	1.6E-04	1.6E-08	1.6E-11
Ce	141	7.2E-05	9.3E-09	9.3E-12
Ce	143	4.2E-05	2.2E-09	2.2E-12
Ce	144	3.4E-05	4.7E-09	4.7E-12
Pr	143	5.2E-05	4.6E-09	4.6E-12

TABLE 11.1.2-2 (Sheet 3)
(Continued)

SPECIFIC ACTIVITIES IN PRINCIPAL FLUID STREAMS

REALISTIC BASIS (μCi/gm)

Isotope	Reactor Coolant (a)	Secondary Coolant* Water (b)	Secondary Coolant* Steam (c)
	Class 6 Other Isotopes		
Pr 144	3.8E-05	2.8E-09	2.8E-12
Np 239	1.3E-03	1.4E-07	1.4E-10

*Based on primary-to-secondary leak of 100 pounds/day.
(a) The activities given are for the reactor coolant entering the letdown line.
(b) The activities given are for water in the steam generator.
(c) The activities given are for steam leaving a steam generator.
NOTE: For primary coolant activities after 4/3/87, see Table 11.1.2-3
For secondary side activities after 6/27/96, see Table 11.1.2-4

Refer to FSAR Reference 11.1.4.6.

TABLE 11.1.2-3 (Sheet 1)

SPECIFIC ACTIVITIES IN PRIMARY COOLANT
BASED ON ANSI/ANS-18.1-1984 (μCi/gm)

Isotope	Reactor Coolant (a)*
Class 1 Noble Gases	
Kr 85M	1.7(-1)
Kr 85	2.7(-1)
Kr 87	1.6(-1)
Kr 88	3.0(-1)
Xe 131M	6.5(-1)
Xe 133M	7.2(-2)
Xe 133	2.5(+0)
Xe 135m	1.4(-1)
Xe 135	9.0(-1)
Xe 137	3.6(-2)
Xe 138	1.3(-1)
Class 2 Halogens	
Br 84	1.7(-2)
I 131	4.8(-2)
I 132	2.2(-1)
I 133	1.5(-1)
I 134	3.6(-1)
I 135	2.8(-1)
Class 3 Cs, Rb	
Rb 88	2.0(-1)
Cs 134	7.4(-3)
Cs 136	9.1(-4)
Cs 137	9.8(-3)
Class 4 Water Activation Products	
N 16	4.0(1)
Class 5 Tritium	
H 3	1.0(0)

(a) The activities given are for the reactor coolant entering the letdown line.
* Numbers in parentheses are factors of 10.

Refer to FSAR Reference 11.1.4.5.

TABLE 11.1.2-3 (Sheet 2)

SPECIFIC ACTIVITIES IN PRIMARY COOLANT
BASED ON ANSI/ANS-18.1-1984 (μCi/gm)

Isotope	Reactor Coolant (a)*
Class 6 Other Isotopes	
Na 24	5.0(-2)
Cr 51	3.3(-3)
Mn 54	1.7(-3)
Fe 55	1.3(-3)
Fe 59	3.2(-4)
Co 58	4.8(-3)
Co 60	5.6(-4)
Zn 65	5.4(-4)
Sr 89	1.5(-4)
Sr 90	1.3(-5)
Sr 91	1.0(-3)
Y 90	1.3(-5)
Y 91M	4.9(-4)
Y 91	5.5(-6)
Y 93	4.5(-3)
Zr 95	4.1(-4)
Nb 95	2.9(-4)
Mo 99	6.8(-3)
Tc 99m	5.0(-3)
Ru 103	7.9(-3)
Ru 106	9.5(-2)
Rh 103M	7.9(-3)
Rh 106	9.5(-2)
Ag 110M	1.4(-3)
Te 129M	2.0(-4)
Te 129	2.6(-2)
Te 131M	1.6(-3)
Te 131	8.3(-3)
Te 132	1.8(-3)
Ba 137M	9.8(-3)
Ba 140	1.4(-2)
La 140	2.6(-2)
Ce 141	1.6(-4)
Ce 143	3.0(-3)
Ce 144	4.2(-3)
Pr 143	3.0(-3)
Pr 144	4.2(-3)
W 187	2.6(-3)
Np 239	2.3(-3)

(a) The activities given are for the reactor coolant entering the letdown line.
*Numbers in parentheses are factors of 10.
Refer to FSAR Reference 11.1.4.5.

TABLE 11.1.2-4 (Sheet 1)
SPECIFIC ACTIVITIES IN SECONDARY SIDE COOLANT
BASED ON ANSI/ANS-18.1-1984 (μCi/gm)

Isotope	Secondary Side Coolant* Water (a)	Steam (b)
Class 1 Noble Gases		
Kr-85m	0.00(00)	3.63(-08)
Kr-85	0.00(00)	5.51(-08)
Kr-87	0.00(00)	3.22(-08)
Kr-88	0.00(00)	6.31(-08)
Ke-131m	0.00(00)	1.34(-07)
Xe-133m	0.00(00)	1.54(-08)
Xe-133	0.00(00)	5.25(-07)
Xe-135m	0.00(00)	2.90(-08)
Xe-135	0.00(00)	1.91(-07)
Xe-137	0.00(00)	7.62(-09)
Xe-138	0.00(00)	2.68(-08)
Class 2 Halogens		
Br-84	9.56(-8)	9.56(-10)
I-131	1.41(-6)	1.41(-8)
I-132	3.37(-6)	3.37(-8)
I-133	4.03(-6)	4.03(-8)
I-134	2.93(-6)	2.93(-8)
I-135	6.19(-6)	6.19(-8)
Class 3 Cs, Rb		
Rb-88	7.36(-7)	3.61(-9)
Cs-134	4.58(-7)	2.36(-9)
Cs-136	5.56(-8)	2.78(-10)
Cs-137	6.11(-7)	3.05(-9)
Class 4 Water Activation Products		
N-16	1.29(-6)	1.29(-7)
Class 5 Tritium		
H-3	1.00(-3)	1.00(-3)

* Numbers in parentheses are factors of 10.
(a) The activities given are for water in a steam generator.
(b) The activities given are for steam leaving a steam generator.

Refer to FSAR Reference 11.1.4.5.

TABLE 11.1.2-4 (Sheet 2)

SPECIFIC ACTIVITIES IN SECONDARY SIDE COOLANT
BASED ON ANSI/ANS-18.1-1984 (μCi/gm)

Isotope	Secondary Side Coolant* Water (a)	Steam (b)
Class 6 Other Isotopes		
Na-24	1.86(-6)	9.30(-9)
Cr-51	1.56(-7)	7.56(-10)
Mn-54	7.80(-8)	3.96(-10)
Fe-55	5.88(-8)	3.00(-10)
Fe-59	1.44(-8)	7.32(-11)
Co-58	2.28(-7)	1.13(-9)
Co-60	2.64(-8)	1.32(-10)
Zn-65	2.52(-8)	1.20(-10)
Sr-89	6.84(-9)	3.48(-11)
Sr-90	5.88(-10)	3.00(-12)
Sr-91	3.52(-8)	1.76(-10)
Y-90**	5.88(-10)	3.00(-12)
Y-91m	4.34(-9)	2.17(-11)
Y-91	2.52(-10)	1.32(-12)
Y-93	1.50(-7)	7.65(-10)
Zr-95	1.92(-8)	9.48(-11)
Nb-95	1.32(-8)	6.84(-10)
Mo-99	3.03(-7)	1.45(-9)
Tc-99m	1.40(-7)	7.27(-10)
Ru-103	3.72(-7)	1.92(-9)
Ru-106	4.44(-6)	2.16(-8)
Rh-103m**	3.72(-7)	1.92(-9)
Rh-106	4.44(-6)	2.16(-8)
Ag-110m	6.36(-8)	3.24(-10)
Te-129m	9.36(-9)	4.68(-11)
Te-129	2.96(-7)	1..48(-9)
Te-131m	6.60(-8)	3.30(-10)
Te-131	3.97(-8)	2.05(-10)
Te-132	7.98(-10)	3.99(-10)
Ba-137m**	6.11(-7)	3.05(-9)
Ba-140	6.25(-7)	3.12(-9)
La-140	1.13(-6)	5.60(-9)
Ce-141	7.32(-9)	3.72(-11)

* Numbers in parentheses are factors of 10.
(a) The activities given are for water in a steam generator.
(b) The activities given are for steam leaving a steam generator.
** Daughter which is in secular equilibrium with parent (see reference 4 for more detail.)

Refer to FSAR Reference 11.1.4.5.

TABLE 11.1.2-4 (Sheet 3)

SPECIFIC ACTIVITIES IN SECONDARY SIDE COOLANT
BASED ON ANSI/ANS-18.1-1984 (μCi/gm)

Isotope	Secondary Side Coolant*	
	Water (a)	Steam (b)
Class 6 Other Isopotes		
Ce-143	1.22(-7)	6.23(-10)
Ce-144	1.92(-7)	9.83(-10)
Pr-143**	1.22(-7)	6.23(-10)
Pr-144**	1.92(-7)	9.83(-10)
W-187	1.07(-7)	5.40(-10)
Np-239	1.02(-7)	5.09(-10)

*Numbers in parentheses are factors of 10.
(a) The activities given are for water in a steam generator.
(b) The activities given are for steam leaving a steam generator.
***Pure beta emitter, see FSAR 11.1.4.5 reference for more detail.

Refer to FSAR Reference 11.1.4.5.

11.2 LIQUID WASTE SYSTEMS

11.2.1 Design Objectives

The Liquid Waste Processing System is designed to receive, segregate, process, recycle for further processing and discharge liquid wastes. The system design considers potential personnel exposure and assures that quantities of radioactive releases to the environment are as low as practicable. Under normal plant operation, the activity from radionuclides leaving the discharge canal is a small fraction of the limits in 10 CFR Parts 20 and 50.

The plant is designed to meet the regulations during operation with a combination of equipment faults which could occur with moderate frequency, including fuel cladding defects in combination with such occurrences as:

1. Steam generator tube leaks
2. Malfunction in Liquid Waste Processing System
3. Excessive leakage in Reactor Coolant System Equipment
4. Excessive leakage in Auxiliary System Equipment

The expected annual activity releases (by isotope) are presented in Subsection 11.2.6, and the estimated doses are presented in Subsection 11.2.9.

11.2.2 System Descriptions

The Liquid Waste Processing System was initially designed to collect and process potentially radioactive wastes for recycle to the Reactor Coolant System or for release to the environment. The liquid waste processing system was, by original design, arranged to recycle as much reactor grade water entering the system as practical. This was implemented by the segregation of equipment drains and waste streams which prevents the intermixing of liquid wastes. The layout of the liquid waste processing system, therefore, consists of two main subsystems designed for collecting and processing reactor grade (tritiated) and non-reactor grade (non-tritiated) water, respectively. All liquids are now routinely processed as necessary for release to the environment instead of recycling and are no longer maintained segregated based on tritium content during processing. This includes reprocessing the contents of tanks which accumulate waste water for discharge which may be unsuitable for direct release (e.g., Monitor Tank to FDCT for reprocessing via Radwaste Demineralizer System, or similar). Provisions are made to sample and analyze fluids before they are discharged. Based on the laboratory analysis, these wastes are either released under controlled conditions via the cooling water system or retained for further processing. A permanent record of liquid releases is provided by analyses of known volumes of waste. The system is shown on the Process Flow Diagram (Figures 11.2.2-1, -2, 11.3.2-1, and -2). Table 11.2.2-2 gives approximate radionuclide inventories of the various tanks in the liquid waste processing system. Actual radionuclide inventories of plant effluents are submitted to the NRC as a requirement of 10CFR50 by Nuclear Chemistry Offsite Dose Calculation Manuel (ODCM). Expected volumes to be processed by the Waste Processing System are given in Table 11.2.2-1.

In addition a system is provided for handling laboratory samples which may be tritiated and may contain chemicals. Capability for handling and storage of spent demineralizer resins is also provided.

The plant system is controlled from a central panel in the auxiliary building and a panel in the main control room. Abnormalities in the system, high sump level, for example, actuate an alarm/level switch in the auxiliary building, and annunciates in the control room. All system equipment is located in or near the auxiliary building, except for the reactor coolant drain tank and drain tank pumps and the various reactor

building floor and equipment drain sumps and pumps which are located in the containment building.

The Radwaste Demineralizer System (Rad DI) is located and operated in the Auxiliary Building waste packaging area when the vendor's service is requested.

At least two valves must be manually opened to permit discharge of liquid to the environment. One of these valves is normally locked closed. A control valve trips closed on a high effluent radioactivity level signal. Administrative controls prevent discharge without dilutions.

Parts of the Liquid Waste Processing System is shared by the two units. However, as the system serves no emergency function, the safety of either unit is not affected.

Shared Components

The Liquid Waste Processing System consists of one reactor coolant drain tank with two pumps, an auxiliary reactor building floor and equipment drain sump with two pumps, a keyway sump with one pump, and a reactor building floor and equipment drain sump with two pumps inside the containment building of each unit and the following shared equipment inside the auxiliary building: one sump tank and two pumps, one tritiated drain collector tank with two pumps and one filter, one floor drain collector tank with two pumps and one strainer, monitor tank and two pumps, a chemical drain tank and pump, two hot shower tanks and pump, a spent resin storage tank, a cask decontamination tank with two pumps and two filters, auxiliary building floor and equipment drain sump and two pumps, a passive sump, a Radwaste Demineralizer System, and the associated piping, valves and instrumentation.

The following shared components are located in the condensate demineralizer building for receiving, processing, and transferring wastes from the regeneration of condensate demineralizers: high crud, low conductivity tanks, pumps and filters; a neutralizer tank and pumps; and a non-reclaimable waste tank and pumps.

Separation of Tritiated and Nontritiated Liquids

Waste liquids which are high in tritium content are routed to the tritiated drain collector tank, while liquids low in tritium content are routed to the floor drain collector tank. All tritiated and nontritiated liquid waste are processed for discharge to the environment.

Tritiated Water Processing

Tritiated reactor grade water is processed for discharge to the environment or recycle to the primary water storage tank. The water enters the liquid waste disposal system from equipment leaks and drains, valve leakoffs, pump seal leakoffs, tank overflows, and other tritiated and aerated water sources including draindown of the CVCS holdup tanks, as desired.

The equipment provided in this channel consists of a tritiated drain collector tank, pumps, and filter and Radwaste Demineralizer System. The primary function of the tritiated drain collector tank is to provide sufficient surge capacity for the radwaste processing equipment.

The liquid collected in the tritiated drain collector tank contains boric acid, and fission product activity. The liquid can be processed as necessary to remove fission products so that the water may be reused in the Reactor Coolant System or discharged to the environment.

Nontritiated Water Processing

Nontritiated water is sampled and processed as necessary for discharge to the river. The sources include floor drains, equipment drains containing nontritiated water, certain sample room and radiochemical laboratory drains, hot shower drains and other nontritiated sources. The equipment provided in this channel consists of a floor drain collector tank, pumps, and strainer, Radwaste Demineralizer System, hot shower tanks and pump, cask decontamination collector tank and pumps, monitor tank and pumps.

Liquids entering the floor drain collector tank are from small volume, low activity sources. If the activity is below permissible discharge levels following analysis to confirm acceptably low level, then the tank contents may be discharged without further treatment other than filtration. Otherwise, the tank contents are processed through the Radwaste Demineralizer System.

The hot shower drain tanks normally need no treatment for removal of radioactivity. The inventory of these tanks may be discharged directly to the cooling tower blowdown via the hot shower tank strainer or to other tanks in the liquid waste system.

The liquid waste system is also designed to process blowdown liquid from the steam generators of a unit having primary-to-secondary leak coincident with significant fuel rod clad defects. The blowdown from the steam generators is passed through the condensate demineralizer (refer to Subsections 10.4.6 and 10.4.8) or directly to the cooling tower blowdown line.

Radwaste Demineralizer System Processing of Tritiated and Nontritiated Waste (If being utilized)

Flow from both the tritiated and nontritiated tanks is routed to the Radwaste Demineralizer System by use of the waste evaporator and auxiliary waste evaporator feed pumps. Processed water from the system is routed to either the monitor tank or the cask decontamination tank. The contents of these tanks are either recycled, reprocessed, or discharged as described in previous sections. The Radwaste Demineralization System removes soluble and suspended radioactive materials from the waste stream via ion exchange and filtration. Once the resin and filter media is expended, it is processed for disposal. Filters are air-dried and placed into containers for disposal.

Laboratory Sample Processing

Laboratory solutions which contain chemicals can be discarded in a separate sink which drains to the chemical drain tank. Low activity drains from the laboratory, such as flush water, are routed to the floor drain tank. Excess tritiated samples not contaminated by chemicals during analysis can be directed to the tritiated drain collector tank.

Processing of Waste from Regeneration of Condensate Demineralizer

High conductivity chemical regenerate and rinse wastes produced during condensate demineralizer regeneration are routed to the neutralization tank (NT) or, alternately, to the nonreclaimable waste tank (NRWT) where they are collected and neutralized. If the contents of either tank (NT or NRWT) are not radioactive or if the radioactivity level is less than the dischargeable limit, it is transferred to the turbine building sump and subsequently discharged through the low volume waste treatment pond, or alternately it is discharged to the cooling tower blowdown. If the contents of either the NT or NRWT are radioactive, they may be discharged to the cooling tower blowdown if the radioactivity level is within specification; otherwise, they are processed by the radwaste system (see nontritiated water processing).

Low conductivity waste water produced during condensate demineralizer regeneration is routed to the high crud tanks (HCT-A and HCT-B) where it is collected and neutralized (if necessary). If the contents of HCTs are not radioactive or if the radioactivity level is within dischargeable limits, they are transferred to the turbine building sump and subsequently discharged through the low volume waste treatment pond or yard pond, or discharged to the cooling tower blowdown. If the contents of the HCTs are radioactive, they maybe processed through the radwaste system or released via the cooling tower blowdown.

Spent Resin Processing

Spent resin is stored in the spent resin storage tank (SRST). To remove spent resins from the storage tank for packaging, the resin is agitated by bubbling nitrogen through the tank to the vent header. The resin is slurried from the SRST, by nitrogen pressure, to the railroad bay where it is received in liners and dewatered prior to shipment offsite, or storage in Sequoyah's Low Level Radwaste (LLRW) on-site storage facility (see Section 11.5.6.3).

11.2.3 System Design

11.2.3.1 Component Design

A summary of principal design parameters are given in Table 11.2.3-1. Design codes for the components of the Liquid Waste Processing System are given in Chapter 3. Materials of the Liquid Waste Processing System are selected to meet the material requirements of the system and applicable codes. All parts of components in contact with borated water are fabricated or clad with austenitic stainless steel. In addition, all pumps are provided with vent and drain connections. The Radwaste Demineralizer System is constructed to the applicable sections of Regulatory Guide 1.143, Rev. 1, 1979.

Reactor Coolant Drain Tank and Pumps

The reactor coolant drain tank (RCDT) (one tank per unit) collects reusable clean reactor coolant type water from inside the reactor containment building. Two pumps are set up on a common header to take suction from either the RCDT or the pressurizer relief tank (PRT). These pumps can transfer the liquid from the drain tank to the Chemical and Volume Control System holdup tanks and to transfer water from the refueling canal to the refueling water storage tank. The maximum load on the pumps occurs when the pressurizer relief tank drains and the excess letdown flow are imposed simultaneously or when the refueling canal is being drained. The normal load on the pumps is a small quantity mainly from leakoffs, although the excess letdown flow can be expected for relatively long periods of time during plant heatup. Pump A is sized for 50 gpm and is used for normal operation; Pump B is sized for 150 gpm and is used for peak loads.

The reactor coolant drain tank is normally vented to the vent header. Since there is oxygen in the refueling water, the tank can be isolated from the vent header and vented locally to the containment sump or containment atmosphere if necessary.

Chemical Drain Tank and Pump

The shared chemical drain tank receives radioactive wastes from the radiochemical laboratory drains and from the decontamination room. The pump is provided to transfer the tank contents. If activity and chemical contamination are very small and within applicable release limits, tank contents are pumped to the monitor or cask decontamination collector tanks for discharge. Under certain conditions (high activity and no harmful chemicals) the tank contents are pumped to the floor drain collector tank using the hot shower tanks' pump.

Sump Tank and Pumps

The sump tank collects tritiated liquid wastes from equipment and lower elevation drains, which cannot drain by gravity to the tritiated drain collector tank. Two pumps are furnished to transfer the liquid collected to the tritiated drain collector tank. The tank vents to the building exhaust system.

Tritiated Drain Collector Tank and Pumps

The shared tank retains radioactive liquids from the primary plant which contain tritiated water, boric acid, and fission products. The primary function of the tank is to provide sufficient surge capacity for the radwaste processing equipment. Two shared pumps are provided to transfer the tank contents to the Radwaste Demineralizer System. When the Radwaste Demineralizer System is used to remove soluble and suspended radioactive material, boron is passed through the system and can be discharged to the cooling tower blowdown via the liquid radwaste tanks.

Floor Drain Collector Tank and Pumps

The shared tank retains primarily non-reactor grade type fluids and some nonrecycleable reactor grade water from certain drains in the Auxiliary Building. Following analysis to confirm acceptably low activity level, the tank contents can be discharged to the environment without further treatment other than filtration. However, provisions are also made to provide further processing through the radwaste demineralizer should high activity fluids enter the tank. Two shared pumps are provided to transfer the tank contents to the radwaste demineralizer.

Hot Shower Tanks and Pump

The hot shower tanks serve for collection of radioactive wastes from the hot shower drains. A pump is utilized to transfer the liquid for processing or for discharge. A recirculation line is provided to permit mixing the contents of the isolated tank before taking samples for activity analysis. If the activity concentration is too high for direct discharge, the waste may be pumped to the floor drain collection tank for further processing.

Spent Resin Storage Tank

This tank is supplied for the storage of used demineralizer resins. Resin is held in this tank for decay of short-lived isotopes and periodically removed to preclude the possibility of resin agglomeration. A layer of water is maintained over the resins to prevent degradation due to decay heat.

Outdoor Tanks

The two refueling water storage tanks, the two primary makeup water storage tanks, and the two condensate storage tanks have the potential to contain radioactive liquid.

Each of the two refueling water storage tanks has redundant high level alarms actuated by separate level switches. The tanks also have an overflow.

The overflow line leads to the pipe tunnel which connects the refueling water storage and the primary makeup storage tank with the auxiliary building. Liquid overflowing the tank is discharged onto the floor of the tunnel from which it flows down a gutter to floor drains at the end of the tunnel adjacent to the auxiliary building. The floor drains are directed to the floor drain collector tank of the liquid radwaste system.

Each primary makeup water storage tank has a high level alarm and an overflow. The overflow line discharges into the same pipe tunnel into which the refueling water storage tank overflow discharges. From the tunnel the liquid drains into the liquid radwaste system.

Each condensate storage tank has a high-level alarm and an overflow. The overflow line terminates beside the tanks just above ground level. Liquid overflowing the tanks would be collected in nearby drains and be discharged into the diffuser pond. From the diffuser pond, liquid is discharged via the diffuser. Table 10.4.1-1 shows the expected radioactivity concentrations in the condenser (and the condensate storage tanks) based on 20 gallons per day primary to secondary leakage and 0.25 percent failed fuel.

Filters

The filters provided are of two types, the first being a bag type made of felt using either polyester, polypropylene, or an equivalent material. Each filter is a once through design using 1 to 2 filters or strainers or a combination of a filter and strainer which are nested one inside of the other. This allows for different combination of filters and/or strainers to obtain acceptable water qualities. The other type of filter is a round cartridge or spun cartridge type construction which relies on a tortuous path to filter particles rather than a carefully controlled absolute hole size. Because of the type of construction no absolute rating is given.

The methods employed to change filters and screens are dependent on activity levels. Filters are valved out of service with a pressure indicator between the isolation valves to assure the valves are not leaking through and the filter is not at system pressure. The filter is drained to the appropriate tank and vented locally. If the radiation level of the filter is low enough, it is changed manually. If activity levels do not permit manual change, the spent filter is removed remotely with temporary shielding to reduce personnel exposure. The spent filter is placed in a shielded drum for removal to the solid waste storage area. A new filter is installed, the housing is reassembled, vent and drain valves are closed and the filter is valved into service. Filters are normally changed because of high differential pressure rather than high radiation levels.

Floor Drain Collector Tank and Tritiated Drain Collector Tank Discharge Filters

Filters or strainers are provided to remove particulate matter from the tritiated and floor drain collector tanks recirculation paths. The vessels are constructed of austenitic stainless steel and the replaceable filter element is nylon, or an equivalent material.

Hot Shower Tank Basket Strainer

The hot shower tank basket strainer is a perforated stainless steel sheet within a stainless steel casing. It is designed to prevent particles from entering the floor drain collector tank.

Cask Decontamination Collector Tank

The cask decontamination collector tank can receive water used in the decontamination of the spent fuel shipping cask except during dry cask storage operation wherein the HI-TRAC transfer cask is decontaminated locally on the auxiliary building refueling floor. The cask decontamination collector tank is normally used as one of two available clean release tanks whose contents may be processed as needed for release to the environment.

Cask Decontamination Collector Tank Pumps

Two pumps are provided to pump cask decontamination waste or clean liquid from the cask decontamination collector tank through the cask decontamination collector tank filter (cask decon waste only) to the waste discharge line or to the monitor tank for reprocessing. Normally, only one pump is used. The pumps are also used to recirculate the tank contents prior to sampling.

Cask Decontamination Collector Tank Filters

Two filters are provided to remove particulate matter larger than 25 microns from the cask decontamination waste. The vessels are constructed of stainless steel and the replaceable filter elements are polyester or polypropylene. Normally, only one filter is used. The filter is normally by-passed when the cask decon tank is used as a clean release tank.

Condensate Demineralizer Waste Processing Equipment High Crud Tanks

These tanks collect high crud, low conductivity waste produced during the backwash phase of condensate demineralizer regeneration. Nonradioactive high crud waste can be routed directly to the turbine building sump or filtered and discharged to cooling tower blowdown, provided discharge permit requirements are satisfied. Radioactive, high crud waste can be discharged to cooling tower blowdown only when the activity is within specified limits. If not within limits, the waste is transferred to the liquid radwaste treatment system for further processing.

High Crud Pumps

Two 180 gpm pumps are provided to circulate the contents of the high crud tanks for sampling, and to pump the tank contents through the bag filters and the high crud filter, to discharge, or to the liquid radwaste treatment system. Normally, only one pump is used.

Bag Filters

Three bag filters are provided upstream of the high crud filter to filter the discharge stream. The vessels are constructed of stainless steel and the replaceable filters elements are polypropylene. During normal operating mode, two bag filters will be in service. The third filter, which is on standby and isolated, may be placed in service while changing out the clogged filters, one at a time, obviating the need to secure flow through the system.

Neutralization Tank

This tank collects spent regenerant chemicals and rinses from condensate demineralizer regeneration (low crud, high conductivity waste). Sulfuric acid or sodium hydroxide is added to adjust the pH to a value between 6.0 and 9.0. The tank contents are circulated during pH adjustment. After neutralization, the tank contents are analyzed for radioactivity and if within limits they are pumped to the turbine building sump, cooling tower blowdown, or the liquid radwaste treatment system.

Neutralization Tank Pumps

Two 150 gpm pumps are provided to circulate the contents of the neutralization tank and to transfer the waste to the desired destination. Normally, only one pump is used.

Non-Reclaimable Waste Tank

The non-reclaimable waste tank receives the same type waste as the neutralization tank. The capability to adjust pH in the tank is provided. The contents of the tank can be routed to the turbine building sump, cooling tower blowdown, or the liquid radwaste treatment system.

Non-Reclaimable Waste Pumps

Two 150 gpm pumps are provided to pump contents of the non-reclaimable waste tank to discharge or to the liquid radwaste treatment system. Normally, only one pump is used.

Liquid Waste Processing System Valves

The design code for the valves is ANSI B16.5. All valves in the liquid waste processing system are stainless steel. The valves involved are diaphragm valves (Saunders patent type) or others, as necessary. This type of valve provides positive control of stem leakage and is suitable for use as an isolation valve or in throttling service.

Valves are supplied for isolation of each major equipment item for maintenance, to direct and control the flow of waste through the system and for isolation of tanks.

Liquid Waste Disposal Piping

The piping design code is ANSI B31.1. The piping is austenitic stainless steel and the piping joints are welded, except where flanged connections are used at pump, valve, and instrument connections to facilitate removal for maintenance. There are a few locations with threaded end fittings where mobile/temporary equipment may be connected.

Facilities for Venting and Draining

Provisions have been made for venting and draining equipment which may require maintenance during the plant life. Vents and drains are provided either on the components themselves or in the pipe lines between the isolation valves. In general, each pipe line and component vent and drain is provided with a valve plus a backup leakage barrier.

Radwaste Demineralization System

The radwaste demineralizer system (also referred to as portable demineralizer or Rad DI) is utilized when required to process radioactive liquid waste. The demineralizers and associated equipment are located in the Auxiliary Building waste packaging area.

The Radwaste Demineralizer System is vendor owned and operated, and is utilized as required for efficient radioactive liquid waste processing via ion exchange and filtration. This is accomplished by use of a combination of chemical treatment, filtration, and ion exchange technology.

All radwaste demineralizer equipment configurations used by the vendor meet the applicable regulatory requirements for the overall radwaste process system, including 10CFR20 and Regulatory Guide 1.143.

11.2.3.2 Instrumentation Design

The instrumentation readout is located mainly on the Waste Processing System (WPS) panel in the Auxiliary Building. Some instruments are read where the equipment is located. Alarms are located on their respective WPS panel. Some instruments are located in the main control room along with handswitches for operating some radwaste pumps and control valves.

Most pumps are protected against loss of suction pressure by a control setpoint on the level instrumentation for the respective vessels feeding the pumps.

Pressure indicators upstream and downstream of filters provide local indications of pressure drops across each component. Releases to the environment are monitored for radioactivity as described in Section 11.4. This instrumentation is further described in Section 11.4.

11.2.4 Operating Procedures

Administrative controls are exercised through the use of instructions covering such areas as valve alignment for various operations, equipment operating instructions, and other instructions pertinent to the proper operation of the processing equipment. Sign off procedures are followed in sampling and analyzing any radioactive liquid to be discharged to assure proper valve alignments and other operating conditions before a release. These procedures are signed and verified by those personnel performing the analysis and approving the release.

Preventive maintenance is performed in accordance with approved plant maintenance program procedures.

The operating procedures and administrative controls used at the Sequoyah Nuclear Plant are written and maintained considering the experience gained in system operation at Sequoyah and considering applicable industry experience, including vendor recommendations. This insures the Sequoyah Nuclear Plant liquid waste management system is operated in as efficient a manner as practical.

Operation of the Liquid Waste Processing System is essentially the same during all phases of normal reactor plant operation; the only differences are in the load on the system. The following sections discuss the operation of the system in performing its various functions. In this discussion, the term "normal operation" should be taken to mean all phases of operation except operation under emergency or accident conditions. The Liquid Waste Processing System is not regarded as a safeguard system.

Liquid Waste Processing

Normal Operation

During normal plant operation the system processes liquids from the following sources:

1. Equipment drains and leaks
2. Radioactive chemical laboratory drains
3. Radioactive hot shower drains
4. Decontamination area drains
5. Demineralizer flushing and backwashing
6. Sampling system
7. CVCS holdup tank (as desired)

The system's reactor coolant drain tanks collect liquids from the following sources and then transfers them for processing to CVCS or radwaste.

1. Reactor coolant loops
2. Reactor coolant pump No. 2 seal leakage
3. Excess letdown during startup
4. Accumulators
5. Valve and reactor vessel flange leakoffs
6. Refueling canal drains

The Pressurizer Relief Tank drains directly to the common header for the reactor coolant drain tank pumps, effectively by-passing the reactor coolant drain tank itself, and is normally pumped to the CVCS holdup tank.

Liquid flows to the reactor coolant drain tank and is discharged directly to the CVCS holdup tanks by the reactor coolant drain tank pumps which are operated automatically by a level controller near the tank. There is one reactor coolant drain tank with two reactor coolant drain tank pumps located inside the containment building of each unit.

Normally, the reactor coolant drain tank pumps are operated in the automatic mode, which allows pump operation and reactor coolant drain tank level to be controlled automatically. The pumps can also be operated manually to control the tank level.

Where possible, waste liquids drain to the waste disposal system floor and tritiated drain collector tanks by gravity flow.

Separation of Tritiated and Nontritiated Liquids

Waste liquids which are high in tritium content are routed to the tritiated drain collector tank, while liquids low in tritium content are routed to the floor drain collector tank. The tritiated liquids and the nontritiated liquids are processed as necessary prior to release.

Tritiated Water

The water enters the liquid waste disposal system via equipment leaks and drains, valve leakoffs, pump seal leakoffs, tank overflows, and other tritiated and aerated water sources.

The equipment consists of a tritiated drain collector tank, two waste evaporator feed pumps, waste evaporator feed filter, and the radwaste demineralizer system.

The tritiated liquids from equipment leaks and drains, and valve leakoffs whose elevations are too low to drain to the tritiated drain collector tank, are drained to the Auxiliary Building floor and equipment drain sump and can be pumped to the tritiated drain collector tank or the floor drain collector tank.

A function of the tritiated drain collector tank is to provide surge capacity.

Nontritiated Water

Nontritiated water can be processed as necessary prior to discharge to the river. The sources include floor drains, equipment drains containing nontritiated water, certain sample room and radiochemical laboratory drains, hot shower drains, and other nontritiated sources. The equipment consists of a floor drain collector tank, two auxiliary waste evaporator feed pumps, auxiliary waste evaporator feed strainer, hot shower tanks and pump, and radwaste demineralizer system.

Hot Shower Drains

One of the two hot shower tanks is valved to receive waste at all times. When one tank is filled, it is valved out and the other tank is valved in. The full tank is then aligned with the hot shower pump to mix the waste by recirculation. A sample can be taken from a local sample connection to determine what subsequent handling of the waste liquid is required. Normally no treatment is required for removal of radioactivity. Low sudsing cleaning agents are used to minimize foaming.

Laboratory Samples

Laboratory samples which contain chemicals used in analysis can be discarded in a fume hood sink which drains to the chemical drain tank.

The operation of the chemical drain tank pump and control of the tank level is manual, with the exception that the pump is shut off automatically on low tank level.

Low activity drains from the laboratory, such as flush water, can be routed to the floor drain tank. Excess tritiated samples not contaminated by chemicals during analysis can be directed to the tritiated drain collector tank.

Shipping Cask Decontamination Drains

Liquid used to decontaminate the spent fuel shipping cask is drained to the 15,000 gallon cask decontamination collector tank except during dry cask storage operation wherein the HI-TRAC transfer cask is decontaminated locally on the auxiliary building refueling floor. The liquid is expected to be low enough in radioactivity content that it can be discharged without processing other than by filtration. Following analysis, the liquid is pumped through the cask decontamination filter and is discharged. In the unlikely event that the radioactivity level is such that further processing is required, the liquid may be reprocessed.

Condensate Demineralizer Waste

The condensate demineralizer system is described in Subsection 10.4.6. Subsection 10.4.6 includes a discussion of the regeneration process. Treatment of regeneration wastes is described in this section.

As described in Subsection 10.4.6, the condensate demineralizer regeneration system is designed to separate wastes into two fractions, one a high crud, low conductivity liquid, and the other low crud, high conductivity liquid. These fractions are collected in separate tanks. The first fraction results from backwash which precedes chemical regeneration and from rinses which follow chemical regeneration. The volumes of these fractions will vary depending on the duration of each backwash and regeneration. The total volume of each usually averages about 60,000 gallons per regeneration.

Treatment of High-Crud, Low-Conductivity (HCLC) Waste

The high crud waste is normally low in conductivity. Liquid in the HCLC tank is recycled with a HCLC pump to achieve a uniform mixture and the waste is sampled for pH and neutralized if required. If the activity of the waste is low, it is discharged to the turbine building sump or cooling tower blowdown. If the activity of the waste is too high to be routed to the Turbine Building Sump, it is sent to the cooling tower blowdown. If the activity of the waste is high enough to cause NRC discharge limits to be exceeded, it can be processed through the radwaste system.

Treatment of Low Crud, High-Conductivity (LCHC) Waste

The LCHC waste, consisting of the spent regeneration chemicals, is collected in both the neutralizer and non-reclaimable waste tanks. The waste is neutralized in either tank and then recycled and sampled for NPDES criteria. If the activity of the waste is low, it is discharged to the Turbine Building Sump or cooling tower blowdown. If the activity of the waste is too high to be routed to the Turbine Building Sump, it is sent to the cooling tower blowdown. If the activity of the waste is high enough to cause NRC discharge limits to be exceeded, it can be processed through the radwaste system.

Discharge of Regeneration Wastes

Waste liquids from the condensate demineralizer regeneration that are to be discharged are first sampled and analyzed to ensure that the NPDES criteria are within acceptable limits. The discharge is directed to the Turbine Building Sump or to the cooling tower blowdown line after passing through control valves and a radiation monitor. The control valves is arranged to close on a high radiation signal from the monitor.

Spent Resin Handling

This portion of the system sluices resin from the demineralizers.

Resin Sluicing From Demineralizers

Resin sluicing from the demineralizer is performed by using primary water to fluff the bed prior to sluicing and for performing the resin sluicing operation. All spent resins are sluiced to the Spent Resin Storage Tank and a resin inventory is maintained for the Spent Resin Storage Tank. When the desired amount of resin has been sluiced to the Spent Resin Storage Tank, then the spent resins are transferred to a shipping container for disposal using primary water and nitrogen.

Sluicing operation of the demineralizer is monitored by taking radiation readings on vessel to determine when demineralizer is empty of resins. A negligible amount, if any, of resins is expected to remain in a demineralizer after flushing.

All water used for sluicing operations is routed to the TDCT.

Resin Storage

Spent resin are stored in the Spent Resin Storage Tank until time for disposal. Removal and transport of resin from the tank is covered under FSAR Section 11.5.3.1. The level indicating system in the Spent Resin Storage Tank is a differential pressure level indicator. Because the system indicates only total level and not the amount of resin and the amount of water, an inventory of spent resins in the tank is maintained. Since the resin volumes flushed from demineralizers are known and the resin volumes shipped are known, the resin level in the tank is also known.

Refueling

Operation of the Liquid Waste Processing System is the same during refueling as during normal operation except when the holdup tanks are utilized to provide water to the refueling canal. The holdup tanks can be utilized as storage or a source of water for the refueling canal to support maintenance and refueling activities. When refueling is complete, the water remaining in the refueling canal following normal drain-down by the Residual Heat Removal System, is drained to the reactor coolant drain tank and pumped back to the refueling water storage tank with the reactor coolant drain tank pumps. The pumps normally operate in the automatic mode during this operation. Since there is oxygen in the refueling water, the drain tank may be isolated from the vent header during this transfer and the tank is vented to the containment atmosphere. It is necessary to purge the tank with nitrogen before connecting it back to the vent header.

Faults of Moderate Frequency

The system is designed to handle the occurrence of equipment faults of moderate frequency such as:

1. Malfunction in the Liquid Waste Processing System

   Malfunction in this system could include such things as pump or valve failures or radwaste demineralizer failure. Because of pump standardization throughout the system, a spare pump can be used to replace most pumps in the system. There is sufficient surge capacity in the system to accommodate waste until the failures can be fixed and normal plant operation resumed. The Auxiliary Building passive sump has sufficient capacity to contain unprocessed water in the event of a radwaste demineralizer failure.

2. Excessive Leakage in Reactor Coolant System Equipment

   The system is designed to handle a one gpm reactor coolant leak in addition to the expected leakage during normal operation. Operation of the system is almost the same as for normal operation except the load on the system is increased. A one gpm leak into the reactor coolant drain tank is handled automatically but will increase the load factor of the radwaste processing system. If the one gpm leak enters the tritiated drain collector tank,

operation is the same as normal except for the increased load on the system. Abnormal liquid volumes of reactor coolant resulting from excessive reactor coolant or auxiliary building equipment leakage (1 gpm) can also be accommodated by the floor drain collector tank and processed by the Radwaste Demineralizer System.

3. Excessive Leakage in Auxiliary System Equipment

   Leakage of this type could include water from steam side leaks inside the containment building which are collected in the reactor building floor and equipment drain sump. Although the sump pump discharge is normally routed to the floor drain collector tank, the flow could be diverted to the tritiated drain collector tank. Other sources could be component cooling water leaks, service water leaks, and secondary side leaks. This water will enter the floor drain collector tank and will be processed and discharged the same way as during normal operation.

4. Steam Generator Tube Leaks

   During periods of operating with fuel defects coincident with steam generator tube leaks radioactive liquid can be discharged via the steam generator blowdown system. The releases from the secondary side are within the 10 CFR 20 limits on a short term basis and meet existing regulations.

Releases of Waste

Release of radioactive liquid from the Liquid Waste Processing System can be from the cask decontamination collector tank, CVCS monitor tank, hot shower tanks, or chemical drain tank to the cooling towers blowdown line. The cooling tower blowdown line empties into the diffuser pond which discharges into the river through the diffuser pipes. Liquid wastes from the condensate demineralizer system are released from the high crud low conductivity tanks, the non-reclaimable waste tank, and the neutralization tank.

The condenser circulating water (CCW) system operates in three modes: open, closed, and helper. In the open mode, the cooling towers are not used. Cooling water is pumped from the intake and through the condenser, and is discharged into the diffuser pond. Dilution water for the radioactive liquid is provided by the Diffuser Pond, which is continuously supplied CCW or ERCW Pumps. A weir at Gate Structure 1 ensures that under most river level conditions, the ERCW flow is diverted through the cooling tower blowdown line. The radioactive liquid is mixed with ERCW in the cooling tower blowdown line and flows into the diffuser pond where it is diluted by CCW Pump discharge.

In the closed mode, CCW is recirculated between the cooling towers and the condenser. In this mode of operation, the cooling towers blowdown flows at a minimum of 150,000 gpm into the diffuser pond in order to maintain the solids in the cooling water at an acceptable level.

In the helper mode, the CCW from the condenser goes through the cooling towers and is released to the diffuser pond through Gate Structure 1 and the cooling tower blowdown line.

Release of the radioactive liquids from the liquid waste system is made only after laboratory analysis of the tank contents. Once the fluids are sampled, they are pumped to the discharge pipe through a remotely operated control valve, interlocked with a radiation monitor.

Minimum dilution flow shall be determined by verification of at least 2 CCW Pumps running from either Unit during normal operations. When less than 2 CCW Pumps are running minimum dilution flow shall be verified via ERCW flow instrumentation or by periodic flowrate estimation in accordance with the SQN ODCM.

A similar arrangement is provided for wastes discharged from the condensate demineralizer waste system. The flow control valve is interlocked with a radiation monitor. Release of wastes will be automatically stopped by a high radiation signal.

The steam generator blowdown system also may discharge radioactive liquid. Liquid waste from this system is not collected in tanks for treatment, but is continuously monitored for radioactivity and may discharge to the cooling tower blowdown, or recirculate to the condensate system upstream of the condensate demineralizers. The flow control valve in the discharge line is interlocked with a radiation monitor. Minimum dilution flow shall be determined by verification of at least 2 CCW Pumps running from either Unit during normal operations. When less than 2 CCW Pumps are running minimum dilution flow shall be verified via ERCW flow instrumentation or by periodic flowrate estimation in accordance with the SQN ODCM. Refer to Section 10.4.8 for a description of the steam generator blowdown system operation and/or Section 11.4.2.1.4 for a description of its monitoring system.

The Turbine building sump collects liquid entering the turbine building floor drain system or from clean water sources in the Auxiliary Building that are transferred to the Turbine Building sump. When the sump is nearly full (maximum capacity 30,000 gallons), the liquid is automatically discharged (level initiated) to the low-volume waste treatment pond or the yard drainage pond. Water in the yard drainage pond overflows and drains by gravity to the diffuser pond, from which it flows to the river via the diffusers.

Station Blackout

The Liquid Waste Processing System does not normally operate during a blackout. If necessary, equipment can be manually connected to the emergency power source.

Loss-of-Coolant Accident

The Liquid Waste Processing System does not operate during, or immediately following, a loss-of-coolant accident. As in the case for a station blackout, equipment may be started manually, as required, when electrical power is available.

Operating Experience

Waste Evaporators

The original waste and auxiliary waste evaporators and CDWE have been isolated from the system and abandoned in place. The contents of the tritiated drain collector tank, floor drain collection tank, and CVCS holdup tanks are pumped to the Radwaste Demineralizer System for processing.

Demineralizers

Operational data on demineralizer decontamination factors for selected isotopes has been obtained. The measured range of decontamination factors for these isotopes are given in Table 11.2.4-1. These values were observed across mixed bed demineralizers containing cation resin in the lithium-7 form and anion resin in the borated form. The minimum values in Table 11.2.4-1 were generally observed just prior to resin flushing and recharging, while during the operating life of the demineralizer, decontamination factors were consistently closer to the maximum values.

Although specific operating decontamination factors have not as yet been measured for other isotopes, their behavior in a mixed bed demineralizer may be inferred from this data. One would anticipate, for example, tellurium and bromine to have decontamination factors similar to those given for iodine and fluorine.

11.2.5 Performance Tests

Initial performance tests were performed to verify the operability of the components, instrumentation and control equipment and applicable alarms and control setpoints.

The specific objectives demonstrated the following:

1. Pumps are capable of producing flow rate and head as required.

2. Waste filters are capable of passing required flow rate.

3. Instrumentation, controllers and alarms operate satisfactorily to maintain levels, pressures and flow rates and indicates, records and alarms as required.

4. All sampling points are available for sampling.

During reactor operation the Radwaste Demineralizer System is used as needed.

Data is taken periodically for use in determining decontamination factors of demineralizers and evaporators.

11.2.6 Estimated Releases

11.2.6.1 NRC Requirements

The following documents have been issued by the NRC to provide regulations and guidelines for releases of radioactive liquids:

1. 10 CFR 20, Standards for Protection Against Radiation.

2. 10 CFR 50, Domestic Licensing of Production and Utilization Facilities.

The following summarizes the basic radioactive liquid release limits established by the above documents:

1. The concentration limit on an unidentified instantaneous release basis as defined in Appendix B of 10 CFR 20 is 10^{-6} μCi/ml.

2. The concentration limit on an identified basis is defined in Appendix B, Table 2, of 10 CFR 20.

Concentration limits for the major isotopes are as follows:

Isotope	μCi/ml
Mo-99	2×10^{-5}
I-131	1×10^{-6}
I-133	7×10^{-6}
Cs-134	9×10^{-7}
Cs-136	6×10^{-6}
Cs-137	1×10^{-6}

3. The water effluent concentration limit for tritium on an identified basis as given in Appendix B, Table 2 of 10 CFR 20 is 1×10^{-3} μCi/ml.

11.2.6.2 Expected Liquid Waste Processing System Releases

The quantities and isotopic concentration in liquids assumed discharged to the Liquid Waste Processing System, and hence the releases to the environment, are highly dependent upon the operation of the plant. The analysis for Sequoyah is based on engineering judgment with respect to the operation of the plant and the Liquid Waste Processing System and realistic estimation of the potential input sources. Hence, the results are representative of typical releases from Sequoyah Liquid Waste Processing System.

The input sources assumed in the study are summarized in Table 11.2.2-1 and the isotopic activities at key locations in the Liquid Waste Processing System are given in Table 11.2.2-2 with the locations indicated on the Process Flow Diagram, Figures 11.2.2-1 and 11.2.2-2. The expected isotopic composition of reactor grade water is based on 0.12% failed fuel. The associated releases in curies per year per nuclide are given in Table 11.2.2-2.

The Liquid Waste Processing System is assumed to operate as described in Subsection 11.2.4.

11.2.7 Release Points

Radioactive liquid wastes are released from the plant through the cooling tower blowdown line and through the diffuser pond system. The discharge points from the waste disposal system is shown in Figure 11.2.2-2. The connection to the cooling tower blowdown line is shown in Figure 10.4.5-2. The discharge points from the Liquid Waste Processing System are downstream of all waste tanks. The location of the cooling tower blowdown line in relation to the site boundary is shown on Figures 2.1.2-2 and 10.4.5-2 collectively.

11.2.8 Dilution Factors

The offsite dose calculations for drinking water are based on the assumption that the liquid effluent will be mixed with 60 percent of the river flow between the point of discharge and Chickamauga Dam. Although further mixing will occur, 60 percent dilution is assumed to be maintained for approximately 14 miles until Chickamauga Dam (TRM 471.0) is reached where 100 percent dilution is assumed to occur. A complete description of available dilution calculations is in Section 2.4.12.

11.2.9 Estimated Doses from Radionuclides in Liquid Effluents

Doses from the ingestion of water, from the consumption of fish, and from shoreline recreation are calculated for exposures to radionuclides routinely released in liquid effluents.

11.2.9.1 Assumptions and Calculational Methods

Internal doses are calculated using methods outlined in Nuclear Regulatory Commission (NRC) Regulatory Guide 1.109, Rev. 1. This model is used for estimating the doses to bone, gastrointestinal tract, thyroid, liver, and total body of man from ingestion of water and consumption of fish and from external exposures due to recreational activities.

Population doses are estimated for the year 2020 based on the current populations. Projections are based on an assumed increase of 2% per year in exposed populations.

1. Doses to Man from the Ingestion of Water

Data listed in Table 11.2.9-1 for public water supplies on the Tennessee River within a 50-mile radius downstream of Sequoyah Nuclear Plant are used to calculate dose commitments from the consumption of Tennessee River water. Dilution is calculated using average annual flow data for the Tennessee River as measured during the 31 year period 1959 - 1990. The flow averages approximately 30,000 ft^3/s at the nuclear plant site.

Radioactive decay are based on estimates of the transport time calculated from flow data. Additional radioactive decay is considered between the time of intake in a water system and the time of consumption. This time is set equal to 12 hours to allow for processing and distribution time. Maximum and average consumption rates are those recommended in Regulatory Guide 1.109.

Due to a lack of definitive data, no credit is taken for removal of activity from the water through absorption on solids and sedimentation, by deposition in the biomass, or by processing within water treatment systems.

Internal doses, for an organ from a single radionuclide are calculated using the relation

$$D = DCF \times I \qquad (1)$$

where DCF = The dose commitment factor for the organ from ingestion of the radionuclide; the values used were taken from NRC Regulatory Guide 1.109, Rev 1, (mrem/pCi).

I = The activity of the radionuclide taken into the body annually via ingestion, (pCi).

Resultant calculated dose commitments are shown in Table 11.2.9-2.

2. Doses to Man from the Consumption of Fish

Current estimates of Tennessee River fish harvests are 3.04 lb/acre/year. It is assumed that these rates will increase with the population expansion, so that the dose calculations

are based on harvests of 5.51 lb/acre in the year 2020. The Tennessee River within 50 miles downstream of SQN is segmented into 4 reaches in order to facilitate the calculations of fish harvests and radioactivity concentrations. The radioactivity levels in the fish from each reach are estimated by the product of an average activity concentration in the reach and a concentration factor for each radionuclide. Concentration factors are taken from Regulatory Guide 1.109. The population dose is calculated using the assumption that all of the edible fish harvested are consumed by humans living within the 50-mile radius. The annual rates of consumption for maximum and average individuals are also taken from Regulatory Guide 1.109. Radioactive decay is considered between the time the fish is removed from the water and the time of consumption.

Dose commitments are calculated with equation 1 as discussed for water ingestion in the previous section, and the results are shown in Table 11.2.9-2.

There should be no significant radiological impact from human utilization of shellfish. Shellfish are not currently being harvested commercially in the Tennessee River, and consumption of shellfish by humans is assumed to be negligible.

3. Doses to Man Due to Shoreline Recreation

Estimates of the annual doses D from recreation around the Tennessee River are calculated for each radionuclide using the following equation.

$$D = (RDCF)\ C \times T(mrem) \qquad (2)$$

where (RDCF) = The shoreline recreation dose commitment factor, mrem/hour per pCi/m^3, from Regulatory Guide 1.109, Table E-6.

T = Exposure time pertaining to the k th pathway;yr.

C = The concentration of the radionuclide in the sediment, pCi/m^3; calculated using NRC Regulatory Guide 1.109, Rev. 1, methodology.

Doses from shoreline recreational activities are estimated using the methodology outlined in NRC Regulatory Guide 1.109, Rev. 1. Equation A-5 from the Regulatory Guide is used to determine the 15-year buildup concentration of radionuclides in sediment. Having these concentrations, combined with external dose factors for standing on contaminated ground and a shore-width factor of 0.3 (Table A-2, Regulatory Guide 1.109, Rev. 1) allows the determination of maximum expected external dose rates. Water concentrations are calculated for 4 reaches between the nuclear plant site and Tennessee River Mile 400.0. Doses to the population are calculated using estimates for shoreline visits for the respective reaches based on information given in the ODCM multiplied by the predicted population growth factor of 2% per year.

The maximum individual doses due to shoreline activity are assessed for a person on a fictitious beach just below the Sequoyah site 10 hours per week, 50 weeks per year. Calculated hypothetical dose rates from recreational activities are presented in Table 11.2.9-2.

11.2.9.2 Summary of Dose from Radionuclides in Liquid Effluents

Radiation doses calculated for releases of radionuclides in liquid effluents during normal operation of the Sequoyah Nuclear Plant are summarized in Table 11.2.9-2. Liver tissues are expected to receive the greatest doses for both the maximum individual and thyroid tissues receive the highest population dose. These results demonstrate that the releases from the plant are in accordance with the design objectives as outlined in Subsection 11.2.1.

TABLE 11.2.2-1 (Sheet 1)

LIQUID WASTE PROCESSING SYSTEM CALCULATIONAL BASIS

1.0 Tritiated Drain Collection Tank

1.1 Tank activity concentrations are based on the tank activities and liquid volumes given in Table 11.2.2-2.

1.2 TDCT output flow is 5.0 gpm which is directed to the radwaste demineralizer (Rad DI) prior to release to CTBD (cooling tower blowdown).

2.0 Floor Drain Collection Tank

2.1 Tank activity concentrations are based on the tank activities and liquid volumes given in Table 11.2.2-2.

2.2 FDCT output flow is 9.3 gpm which is directed to the Rad DI prior to release to CTBD.

3.0 CVCS Holdup Tank (HUT)

3.1 The HUT is assumed to consist of reactor coolant activity that has been processed through the letdown demineralizer.

3.2 Reactor coolant concentrations are based on ANSI/ANS-18.1-1984, as given in Table 11.1.2-3.

3.3 Decontamination Factors (DFs) for the letdown demineralizer are based on ANSI/ANS-18.1-1984 and are:

1	H-3
100	Anions (Br, I)
50	All other nuclides

3.4 HUT output flow is 0.73 gpm which is directed to the Rad DI prior to release to CTBD.

4.0 Radwaste Demineralizer (Rad DI)

The following DFs for the Rad DI are based on NUREG-0017 and actual operational data:

100	Iodine
1	H-3
50	Cesium
10	Other nuclides

5.0 Chemical Drain Tank (CDT)

5.1 Tank activity concentrations are based on the tank activities and liquid volumes given in Table 11.2.2-2.

5.2 CDT output flow is 1000 gal/yr/unit which is released to CTBD without prior treatment.

TABLE 11.2.2-1 (Sheet 2)

LIQUID WASTE PROCESSING SYSTEM CALCULATIONAL BASIS

6.0 Hot Shower Tank (HST)

6.1 Tank activity concentrations are based on the tank activities and liquid volumes given in Table 11.2.2-2.

6.2 HST output flow is 0.5 gpm which is released to CTBD without prior treatment.

7.0 Condensate Demineralizer System (CDS)

7.1 Nuclide concentrations are based on the values for secondary coolant (steam) given in ANSI/ANS-18.1-1984, adjusted for SQN specific operational parameters.

7.2 CDS output flow is 660 gpm which is released to CTBD without prior treatment.

8.0 Steam Generator Blowdown (SGBD)

8.1 Nuclide concentrations are based on the values for secondary coolant (water) given in ANSI/ANS-18.1-1984, adjusted for SQN specific operational parameters.

8.2 SGBD output flow is 3E+4 lb/h which is released to CTBD without prior treatment.

Table 11.2.2-2
Expected Total Isotopic Concentration Annual Releases from Components in the Liquid Waste Processing System

ISOTOPE	Mob. Demin DF	FDCT Ci	FDCT Release Ci/y	TDCT Ci	TDCT Release Ci/y	RCS (E-6) Ci/gm	Letdown DF	CVCS HUT Ci/cc	HUT Release Ci/y	HST Ci	HST Release Ci/y	CDT Ci	CDT Release Ci/y	CDS (E-6) Ci/gm	CDS Release Ci/y	SGBD (E-6) Ci/gm	SGBD Ci/y	Mob. Demin Ci/y	CTBD Ci/y	Total Plant Ci/y	ISOTOPE
Na-24	10	0.00E+00	0.00E+00	0.00E+00	0.00E+00	4.99E-02	50	9.98E-10	1.45E-01	0.00E+00	0.00E+00	0.00E+00	0.00E+00	9.30E-09	1.22E-02	1.86E-06	2.22E-01	1.45E-01	2.34E-01	3.79E-01	Na-24
Cr-51	10	3.50E-05	1.52E-03	2.30E-03	8.39E-02	3.26E-03	50	6.52E-11	9.47E-03	0.00E+00	0.00E+00	2.10E-04	1.40E-03	7.56E-10	9.93E-04	1.56E-07	1.86E-02	9.49E-02	2.10E-02	1.16E-01	Cr-51
Mn-54	10	2.10E-04	9.11E-03	2.30E-03	8.39E-02	1.68E-03	50	3.36E-11	4.88E-03	7.30E-06	2.00E-03	2.80E-04	1.87E-03	3.96E-10	5.20E-04	7.80E-08	9.30E-03	9.79E-02	1.37E-02	1.12E-01	Mn-54
Fe-55	10	0.00E+00	0.00E+00	0.00E+00	0.00E+00	1.26E-03	50	2.52E-11	3.66E-03	0.00E+00	0.00E+00	0.00E+00	0.00E+00	3.00E-10	3.94E-04	5.88E-08	7.01E-03	3.66E-03	7.40E-03	1.11E-02	Fe-55
Fe-59	10	2.60E-04	1.13E-02	2.70E-03	9.85E-02	3.16E-04	50	6.32E-12	9.18E-04	0.00E+00	0.00E+00	2.80E-04	1.87E-03	7.32E-11	9.61E-05	1.44E-08	1.72E-03	1.11E-01	3.68E-03	1.15E-01	Fe-59
Co-58	10	5.90E-03	2.56E-01	7.00E-02	2.56E+00	4.84E-03	50	9.68E-11	1.41E-02	2.90E-05	7.94E-03	7.70E-03	5.14E-02	1.13E-09	1.48E-03	2.28E-07	2.72E-02	2.82E+00	8.80E-02	2.91E+00	Co-58
Co-60	10	1.80E-04	7.81E-03	2.20E-03	8.03E-02	5.58E-04	50	1.12E-11	1.62E-03	6.50E-05	1.78E-02	2.80E-04	1.87E-03	1.32E-10	1.73E-04	2.64E-08	3.15E-03	8.97E-02	2.30E-02	1.13E-01	Co-60
Zn-65	10	0.00E+00	0.00E+00	0.00E+00	0.00E+00	5.37E-04	50	1.07E-11	1.56E-03	0.00E+00	0.00E+00	0.00E+00	0.00E+00	1.32E-10	1.73E-04	2.52E-08	3.00E-03	1.56E-03	3.18E-03	4.74E-03	Zn-65
Br-83	100	3.30E-04	1.43E-03	1.60E-04	5.84E-04	0.00E+00	100	0.00E+00	0.00E+00	0.00E+00	0.00E+00	6.60E-06	4.41E-05	0.00E+00	0.00E+00	0.00E+00	0.00E+00	2.02E-03	4.41E-05	2.06E-03	Br-83
Br-84	100	3.10E-04	1.34E-03	1.90E-04	6.93E-04	1.72E-02	100	1.72E-10	2.50E-03	0.00E+00	0.00E+00	8.10E-06	5.41E-05	9.56E-10	1.26E-03	9.56E-08	1.14E-02	4.54E-03	1.27E-02	1.72E-02	Br-84
Br-85	100	5.90E-07	2.56E-06	2.10E-07	7.66E-07	0.00E+00	100	0.00E+00	0.00E+00	0.00E+00	0.00E+00	8.90E-09	5.94E-08	0.00E+00	0.00E+00	0.00E+00	0.00E+00	3.33E-06	5.94E-08	3.39E-06	Br-85
Rb-86	10	2.80E-05	1.21E-03	2.20E-04	8.03E-03	0.00E+00	50	0.00E+00	0.00E+00	0.00E+00	0.00E+00	1.80E-05	1.20E-04	0.00E+00	0.00E+00	0.00E+00	0.00E+00	9.24E-03	1.20E-04	9.36E-03	Rb-86
Rb-88	10	1.90E-03	8.24E-02	7.00E-04	2.55E-02	2.04E-01	50	4.08E-09	5.93E-01	0.00E+00	0.00E+00	3.00E-05	2.00E-04	3.61E-09	4.74E-03	7.36E-07	8.77E-02	7.00E-01	9.27E-02	7.93E-01	Rb-88
Sr-89	10	1.00E-04	4.34E-03	9.80E-04	3.58E-02	1.47E-04	50	2.94E-12	4.27E-04	0.00E+00	0.00E+00	1.00E-04	6.68E-04	3.48E-11	4.57E-05	6.84E-09	8.15E-04	4.05E-02	1.53E-03	4.20E-02	Sr-89
Sr-90	10	2.90E-06	1.26E-04	3.00E-05	1.10E-03	1.26E-05	50	2.52E-13	3.66E-05	0.00E+00	0.00E+00	3.80E-06	2.54E-05	3.00E-12	3.94E-06	5.88E-10	7.01E-05	1.26E-03	9.94E-05	1.36E-03	Sr-90
Y-90	10	4.70E-06	2.04E-04	3.60E-05	1.31E-03	1.26E-05	50	2.52E-13	3.66E-05	0.00E+00	0.00E+00	4.10E-06	2.74E-05	3.00E-12	3.94E-06	5.88E-10	7.01E-05	1.55E-03	1.01E-04	1.65E-03	Y-90
Sr-91	10	9.70E-05	4.21E-03	8.20E-05	2.99E-03	1.02E-03	50	2.04E-11	2.96E-03	0.00E+00	0.00E+00	3.50E-06	2.34E-05	1.76E-10	2.31E-04	3.52E-08	4.20E-03	1.02E-02	4.45E-03	1.47E-02	Sr-91
Y-91M	10	9.70E-05	4.21E-03	8.70E-05	3.18E-03	4.93E-04	50	9.86E-12	1.43E-03	0.00E+00	0.00E+00	3.70E-06	2.47E-05	2.17E-11	2.85E-05	4.34E-09	5.17E-04	8.81E-03	5.71E-04	9.38E-03	Y-91M
Y-91M	10	6.40E-04	2.78E-02	5.80E-03	2.12E-01	5.47E-06	50	1.09E-13	1.59E-05	0.00E+00	0.00E+00	6.20E-04	4.14E-03	1.32E-12	1.73E-06	2.52E-10	3.00E-05	2.39E-01	4.17E-03	2.43E-01	Y-91M
Y-93	10	1.90E-05	8.24E-04	1.70E-05	6.20E-04	4.46E-03	50	8.92E-11	1.30E-02	0.00E+00	0.00E+00	7.30E-07	4.87E-06	7.65E-10	1.00E-03	1.50E-07	1.79E-02	1.44E-02	1.89E-02	3.33E-02	Y-93
Zr-95	10	2.10E-05	9.11E-04	1.70E-04	6.21E-03	4.10E-04	50	8.20E-12	1.19E-03	1.00E-05	2.74E-03	1.90E-05	1.27E-04	9.48E-11	1.24E-04	1.92E-08	2.29E-03	8.31E-03	5.28E-03	1.36E-02	Zr-95
Nb-95	10	1.90E-05	8.24E-04	1.60E-04	5.84E-03	2.95E-04	50	5.90E-12	8.57E-04	1.50E-05	4.11E-03	2.00E-05	1.34E-04	6.84E-10	8.98E-04	1.32E-08	1.57E-03	7.52E-03	6.71E-03	1.42E-02	Nb-95
Mo-99	10	9.70E-02	4.21E+00	3.70E-01	1.35E+01	6.57E-03	50	1.35E-10	1.96E-02	0.00E+00	0.00E+00	1.60E-02	1.07E-01	1.45E-09	1.90E-03	3.03E-07	3.61E-02	1.77E+01	1.45E-01	1.78E+01	Mo-99
Tc-99M	10	9.70E-02	4.21E+00	4.00E-01	1.46E+01	5.01E-03	50	1.00E-10	1.46E-02	0.00E+00	0.00E+00	1.70E-02	1.13E-01	7.27E-10	9.55E-04	1.40E-07	1.67E-02	1.88E+01	1.31E-01	1.89E+01	Tc-99M
Ru-103	10	1.40E-05	6.07E-04	1.20E-04	4.38E-03	7.89E-03	50	1.58E-10	2.29E-02	1.00E-06	2.74E-04	1.20E-05	8.01E-05	1.92E-09	2.52E-03	3.72E-07	4.43E-02	2.79E-02	4.72E-02	7.51E-02	Ru-103
Rh-103M	10	1.40E-05	6.07E-04	1.20E-04	4.38E-03	7.89E-03	50	1.58E-10	2.29E-02	0.00E+00	0.00E+00	1.20E-05	8.01E-05	1.92E-09	2.52E-03	3.72E-07	4.43E-02	2.79E-02	4.69E-02	7.48E-02	Rh-103M
Ru-106	10	2.90E-06	1.26E-04	3.00E-05	1.10E-03	9.47E-02	50	1.89E-09	2.75E-01	1.70E-05	4.65E-03	3.70E-06	2.47E-05	2.16E-08	2.84E-02	4.44E-06	5.29E-01	2.76E-01	5.62E-01	8.38E-01	Ru-106
Rh-106	10	2.90E-06	1.26E-04	3.00E-05	1.10E-03	9.47E-02	50	1.89E-09	2.75E-01	0.00E+00	0.00E+00	3.70E-06	2.47E-05	2.16E-08	2.84E-02	4.44E-06	5.29E-01	2.76E-01	5.58E-01	8.34E-01	Rh-106
Ag-110M	10	0.00E+00	0.00E+00	0.00E+00	0.00E+00	1.37E-03	50	2.74E-11	3.98E-03	0.00E+00	0.00E+00	0.00E+00	0.00E+00	3.24E-10	4.25E-04	6.36E-08	7.58E-03	3.98E-03	8.01E-03	1.20E-02	Ag-110M
Te-125M	10	7.60E-06	3.30E-04	8.20E-05	2.99E-03	0.00E+00	50	0.00E+00	0.00E+00	0.00E+00	0.00E+00	8.90E-05	5.94E-04	0.00E+00	0.00E+00	0.00E+00	0.00E+00	3.32E-03	5.94E-04	3.91E-03	Te-125M
Te-127M	10	8.10E-05	3.91E-04	8.30E-04	3.03E-02	0.00E+00	50	0.00E+00	0.00E+00	0.00E+00	0.00E+00	9.60E-05	6.41E-04	0.00E+00	0.00E+00	0.00E+00	0.00E+00	3.38E-02	6.41E-04	3.44E-02	Te-127M
Te-127	10	1.70E-04	7.37E-03	9.00E-04	3.28E-02	0.00E+00	50	0.00E+00	0.00E+00	0.00E+00	0.00E+00	9.90E-05	6.61E-04	0.00E+00	0.00E+00	0.00E+00	0.00E+00	4.02E-02	6.61E-04	4.09E-02	Te-127
Te-129M	10	4.30E-04	1.87E-02	3.90E-03	1.42E-01	2.00E-04	50	4.00E-12	5.18E-04	0.00E+00	0.00E+00	3.80E-04	2.54E-03	4.68E-11	6.14E-05	9.36E-09	1.12E-03	1.62E-01	3.71E-03	1.66E-01	Te-129M
Te-129	10	4.30E-04	1.87E-02	3.90E-03	1.42E-01	2.57E-02	50	5.14E-10	7.46E-02	0.00E+00	0.00E+00	3.80E-04	2.54E-03	1.48E-09	1.94E-03	2.96E-07	3.53E-02	2.36E-01	3.98E-02	2.76E-01	Te-129
Te-131	10	1.70E-05	7.37E-04	6.20E-06	2.26E-04	8.26E-03	50	1.65E-10	2.40E-02	0.00E+00	0.00E+00	2.70E-07	1.80E-06	2.05E-10	2.69E-04	3.97E-08	4.73E-03	2.50E-02	5.00E-03	3.00E-02	Te-131
Te-131M	10	5.10E-04	2.21E-02	9.70E-04	3.54E-02	1.59E-03	50	3.18E-11	4.62E-03	0.00E+00	0.00E+00	4.10E-05	2.74E-04	3.30E-10	4.33E-04	6.60E-08	7.87E-03	6.21E-02	8.57E-03	7.07E-02	Te-131M
Te-132	10	6.40E-03	2.78E-01	2.50E-02	9.13E-01	1.79E-03	50	3.58E-11	5.20E-03	0.00E+00	0.00E+00	1.10E-03	7.34E-03	3.99E-10	5.24E-04	7.98E-08	9.51E-03	1.20E+00	1.74E-02	1.22E+00	Te-132
I-130	100	3.50E-04	1.52E-03	3.50E-04	1.28E-03	0.00E+00	100	0.00E+00	0.00E+00	0.00E+00	0.00E+00	1.50E-05	1.00E-04	0.00E+00	0.00E+00	0.00E+00	0.00E+00	2.80E-03	1.00E-04	2.90E-03	I-130
I-131	100	7.60E-02	3.30E-01	4.70E-01	1.72E+00	4.77E-02	100	4.77E-10	6.93E-03	4.40E-06	1.20E-03	2.70E-02	1.80E-01	1.41E-08	1.85E-02	1.41E-06	1.68E-01	2.05E+00	3.68E-01	2.42E+00	I-131
I-132	100	1.10E-02	4.77E-02	2.80E-02	1.02E-01	2.25E-01	100	2.25E-09	3.27E-02	0.00E+00	0.00E+00	1.20E-03	8.01E-03	3.37E-08	4.42E-02	3.37E-06	4.02E-01	1.83E-01	4.54E-01	6.37E-01	I-132
I-133	100	7.20E-02	3.12E-01	1.01E-01	4.02E-01	1.49E-01	100	1.49E-09	2.16E-02	0.00E+00	0.00E+00	4.50E-03	3.00E-02	4.03E-08	5.29E-02	4.03E-06	4.80E-01	7.35E-01	5.63E-01	1.30E+00	I-133
I-134	100	1.40E-03	6.07E-03	5.70E-04	2.08E-03	3.64E-01	100	3.64E-09	5.29E-03	0.00E+00	0.00E+00	2.40E-05	1.60E-04	2.93E-08	3.85E-02	2.93E-06	3.49E-01	6.10E-02	3.88E-01	4.49E-01	I-134
I-135	100	2.50E-02	1.08E-01	1.70E-02	6.21E-02	2.78E-01	100	2.78E-09	4.04E-02	0.00E+00	0.00E+00	7.20E-04	4.81E-03	6.19E-08	8.13E-02	6.19E-06	7.38E-01	2.11E-01	8.24E-01	1.04E+00	I-135
Cs-134	50	8.50E-03	7.37E-02	8.30E-02	6.06E-01	7.39E-03	50	1.48E-10	4.29E-03	9.40E-05	2.57E-02	1.00E-02	6.68E-02	2.36E-09	3.10E-03	4.58E-07	5.46E-02	6.84E-01	1.50E-01	8.34E-01	Cs-134
Cs-135	50	4.20E-03	3.64E-02	3.10E-02	2.26E-01	9.08E-04	50	1.82E-11	5.27E-04	0.00E+00	0.00E+00	2.20E-03	1.47E-02	2.78E-10	3.65E-04	5.56E-08	6.63E-03	2.63E-01	2.17E-02	2.85E-01	Cs-135
Cs-137	50	6.40E-03	5.55E-02	6.00E-02	4.38E-01	9.79E-03	50	1.96E-10	5.69E-03	1.70E-04	4.65E-02	7.60E-03	5.07E-02	3.05E-09	4.00E-03	6.11E-07	7.28E-02	4.99E-01	1.74E-01	6.73E-01	Cs-137
Ba-137M	10	6.40E-03	2.78E-01	6.00E-02	2.19E+00	9.26E-03	50	1.85E-10	2.69E-02	0.00E+00	0.00E+00	7.60E-03	5.07E-02	3.89E-09	5.11E-03	6.78E-07	8.08E-02	2.49E+00	1.37E-01	2.63E+00	Ba-137M
Ba-140	10	6.40E-05	2.78E-03	4.70E-04	1.72E-02	1.37E-02	50	2.74E-10	3.98E-02	0.00E+00	0.00E+00	3.30E-05	2.20E-04	3.12E-09	4.10E-03	6.25E-07	7.45E-02	5.97E-02	7.88E-02	1.39E-01	Ba-140
La-140	10	5.10E-05	2.21E-03	4.90E-04	1.79E-02	2.64E-02	50	5.28E-10	7.67E-02	0.00E+00	0.00E+00	3.60E-05	2.40E-04	5.60E-09	7.35E-03	1.13E-06	1.35E-01	9.68E-02	1.42E-01	2.39E-01	La-140
Ce-141	10	2.30E-05	9.98E-04	1.90E-04	6.94E-03	1.58E-04	50	3.16E-12	4.59E-04	0.00E+00	0.00E+00	1.80E-05	1.20E-04	3.72E-11	4.88E-05	7.32E-09	8.73E-04	8.39E-03	1.04E-03	9.43E-03	Ce-141
Ce-143	10	8.10E-06	3.51E-04	1.70E-05	6.20E-04	2.96E-03	50	5.92E-11	8.60E+03	0.00E+00	0.00E+00	7.20E-07	4.81E-06	6.23E-10	8.18E-04	1.22E-07	1.45E-02	9.57E-03	1.54E-02	2.50E-02	Ce-143
Pr-143	10	1.40E-05	6.07E-04	1.20E-04	4.38E-03	2.96E-03	50	5.92E-11	8.60E-03	0.00E+00	0.00E+00	8.40E-06	5.61E-05	6.23E-11	8.18E-04	1.22E-07	1.45E-02	1.36E-02	1.54E-02	2.90E-02	Pr-143
Ce-144	10	1.10E-05	4.77E-04	1.00E-04	3.65E-03	4.21E-03	50	8.42E-11	1.22E-02	3.60E-05	9.86E-03	1.20E-05	8.01E-05	9.83E-10	1.29E-03	1.92E-07	2.29E-02	1.64E-02	3.41E-02	5.05E-02	Ce-144
Pr-144	10	1.10E-05	4.77E-04	1.00E-04	3.65E-03	4.21E-03	50	8.42E-11	1.22E-02	0.00E+00	0.00E+00	1.20E-05	8.01E-05	9.83E-10	1.29E-03	1.92E-07	2.29E-02	1.64E-02	2.43E-02	4.07E-02	Pr-144
W-187	10	0.00E+00	0.00E+00	0.00E+00	0.00E+00	2.65E-03	50	5.30E-11	7.70E-03	0.00E+00	0.00E+00	0.00E+00	0.00E+00	5.40E-10	7.09E-04	1.07E-07	1.28E-02	7.70E-03	1.35E-02	2.12E-02	W-187
Np-239	10	2.90E-04	1.26E-02	8.70E-04	3.18E-02	2.32E-03	50	4.64E-11	6.74E-03	0.00E+00	0.00E+00	3.70E-05	2.47E-04	5.09E-10	6.68E-04	1.02E-07	1.22E-02	5.11E-02	1.31E-02	6.42E-02	Np-239
H-3	1	8.90E-02	3.86E+01	3.00E+00	1.10E+03	1.00E+00	1	1.00E-06	1.45E+03	0.00E+00	0.00E+00	7.50E-01	5.01E+00	1.00E-03	1.31E+03	1.00E-03	1.19E+02	2.59E+03	1.44E+03	4.03E+03	H-3
		TDCT	FDCT	HST	CDT	HUT	CDS	SGBD											SUBTOTAL	5.63E+01	W/O H-3
Volume	gal	7200	11270	960	300														TOTAL	4.09E+03	W/ H-3
Flow	gpm	5	9.3	0.5	0.00381	0.73	660	30000 lbs/hr													

Table 11.2.3-1 (Sheet 1)

COMPONENT DESIGN PARAMETERS*

Reactor Coolant Drain Tank

Number per unit	1
Type	Horizontal
Volume, gal	350
Design pressure, internal, psig	25
Design pressure, external, psig	60
Design temperature, °F	267
Normal operating pressure range, psig	0.5-2.0
Normal operating temperature range, °F	50-200
Material of construction	Austenitic SS

Reactor Coolant Drain Tank Pumps

Number per unit	2
Type	Canned, horizontal, centrifugal
Design flow rate, gpm	
Pump A	50
Pump B	150
Design head, ft	175
Design pressure, psig	150
Design temperature, °F	300
Required NPSH at design flow, ft	
Pump A	6
Pump B	6
Material, wetted surfaces	Austenitic SS

Chemical Drain Tank

Number (shared)	1
Type	Vertical
Volume, gal	600
Design pressure	Atmospheric
Design temperature, °F	180
Normal operating pressure	Atmospheric
Normal operating temperature, °F	50-140
Material of construction	Austenitic SS

Chemical Drain Tank Pump

Number (shared)	1
Type	Horizontal, centrifugal, mechanical seal
Design flow rate, gpm	20
Design head, ft	100
Design pressure, psig	150
Design temperature, °F	180
Required NPSH at design flow, ft	5

Table 11.2.3-1 (Sheet 2)

COMPONENT DESIGN PARAMETERS*

Material	Austenitic SS
Sump Tank	
Number (shared)	1
Type	Vertical
Volume, gal	600
Design pressure	Atmospheric
Design temperature, °F	180
Normal operating pressure	Atmospheric
Normal operating temperature, °F	Ambient-100
Material of construction	Austenitic SS
Sump Tank Pumps	
Number (shared)	2
Type	Horizontal, centrifugal, mechanical seal
Design flow rate, gpm	20
Design head, ft	100
Design pressure, psig	150
Design temperature, °F	180
Material of construction, wetted surfaces	Austenitic SS
Tritiated Drain Collector Tank	
Number (shared)	1
Type	Horizontal
Volume, gal	24,700
Design pressure, psig	Atmospheric
Design temperature, °F	180
Normal operating pressure	Atmospheric
Normal operating temperature, °F	50-140
Material of construction	Austenitic SS
Waste Evaporator Feed Pumps	
Number (shared)	2
Type	Horizontal, centrifugal, mechanical seal
Design flow rate, gpm	20
Design head, ft	100
Design pressure, psig	150
Design temperature, °F	180
Required NPSH at design flow, ft	5
Material	Austenitic SS

Table 11.2.3-1 (Sheet 3)

COMPONENT DESIGN PARAMETERS*

Floor Drain Collector Tank

Number (shared)	1
Type	Horizontal
Volume, gal	23,000
Design pressure	Atmospheric
Design temperature, °F	180
Normal operating pressure	Atmospheric
Normal operating temperature, °F	50-140
Material of construction	Austenitic SS

Auxiliary Waste Evaporator Feed Pumps

Number (shared)	2
Type	Horizontal, centrifugal, mechanical seal
Design flow rate, gpm	20
Design head, ft	100
Design pressure, psig	150
Design temperature, °F	180
Required NPSH at design flow, ft	5
Material	Austenitic SS

Hot Shower Tanks

Number (shared)	2
Type	Vertical
Design temperature, °F	180
Design pressure	Atmospheric
Volume, gal	600
Material	Stainless Steel

Hot Shower Tanks' Pump

Number (shared)	1
Design temperature, °F	180
Design pressure, psig	150
Design head, ft	100
Design flow, gpm	20
Material contacting fluid	Stainless Steel
Type	Horizontal, centrifugal, mechanical seal

Cask Decontamination Collector Tank

Number (shared)	1
Type	Vertical
Volume, gal	15,000
Design pressure	Atmospheric

Table 11.2.3-1 (Sheet 4)

COMPONENT DESIGN PARAMETERS*

Design temperature, °F	180
Material	Carbon Steel
Cask Decontamination Collector Tank Pumps	
Number (shared)	2
Flow rate, gpm	150
Design pressure, psig	150
Design temperature, °F	250
Material	Stainless Steel
Cask Decontamination Collector Tank Filters	
Number (shared)	2
Type	Disposable Polypropylene Bag
Flow rate, gpm	150
Design pressure, psig	150
Design temperature, °F	250
Material	304 stainless steel
Spent Resin Storage Tank	
Number (shared)	1
Type	Vertical
Volume, each, ft^3	300
Design pressure, psig	100
Design temperature, °F	180
Normal operating pressure, psig	0.5-15
Normal operating temperature	Ambient
Material of construction	Austenitic SS
High Crud, Low Conductivity Tanks	
Number (shared)	2
Volume of each tank, gal.	19,000
Design pressure, psig	Atmospheric
Design temperature, °F	160
Material	Rubber lined carbon steel
High Crud, Low Conductivity Pumps	
Number (shared)	2
Flow rate, gpm	180
Design pressure, psig	150
Design temperature, °F	160
Material	Stainless steel
Head, ft water	332

Table 11.2.3-1 (Sheet 5)

COMPONENT DESIGN PARAMETERS*

Bag Filters	
Number	3
Type	Disposable Polypropylene bags
Flow rate, gpm	Up to 175 when clean
Design pressure, psig	275 at 100 °F
Design temperature, °F	120
Material for vessel	304 Stainless Steel
Neutralization Tank	
Number (shared)	1
Volume, gal	19,000
Design pressure, psig	Atmospheric
Design temperature, °F	160
Material	Rubber lined carbon steel
Neutralization Pumps	
Number (shared)	2
Flow rate, gpm	150
Design pressure, psig	150
Design temperature, °F	160
Material	Stainless steel
Head, ft water	330
Non Reclaimable Waste Tank	
Number (shared)	1
Volume, gal	10,000
Design pressure, psig	Atmospheric
Design temperature, °F	160
Material	Rubber lined carbon steel
Non Reclaimable Waste Pumps	
Number (shared)	2
Flow rate, gpm	150
Design pressure, psig	150
Design temperature, °F	160
Material	Stainless Steel
Head, ft water	284

* For Design codes and safety classes see Section 3.2

TABLE 11.2.4-1

RANGE OF MEASURED DECONTAMINATION FACTORS FOR SELECTED ISOTOPES

Isotope	Minimum	Maximum
I-131	1.1×10^{1}	1.6×10^{4}
I-133	1.1×10^{1}	1.8×10^{4}
I-135	1.4×10^{1}	2.0×10^{4}
Cs-137	2.4	1.3×10^{3}
F-18	1.73×10^{1}	1.5×10^{3}
Co-58	3.2×10^{1}	8.2×10^{3}
Mn-54	$>2.5 \times 10^{1}$	$<1.3 \times 10^{2}$

These values were observed across mixed bed demineralizers containing cation resin in the lithium-7 form and anion resin in the borated form.

Refer to FSAR Reference 11.1.4.6.

TABLE 11.2.9-1

TENNESSEE RIVER DRINKING WATER SUPPLY INTAKES WITHIN 50 MILE RADIUS DOWNSTREAM OF THE SEQUOYAH NUCLEAR PLANT

LOCATION (RM)	PUBLIC WATER SUPPLY	2020 POPULATION
484.5	Sequoyah Nuclear Plant	
469.9	E. I. DuPont Company	2,536
465.3	Chattanooga	405,745
418.0	South Pittsburg	8,872
413.6	Bridgeport	8,423

TABLE 11.2.9-2

ANNUAL DOSES TO MAN FROM RELEASES OF RADIOACTIVITY
TO THE TENNESSEE RIVER
(2020 POPULATION)

	Age Group				
Organ	Adult (mrem)	Teen (mrem)	Child (mrem)	Infant (mrem)	Population (man-rem)
Total Body	3.8E-01	2.3E-01	1.2E-01	3.5E-02	4.6E+00
Bone	2.8E-01	2.8E-01	3.6E-01	4.4E-02	4.8E+00
GIT	1.0E-01	8.0E-02	5.6E-02	3.6E-02	5.0E+00
Thyroid	3.2E-01	2.9E-01	4.0E-01	3.4E-01	2.7E+01
Liver	4.8E-01	5.2E-01	4.4E-01	4.8E-02	5.8E+00
Kidney	2.0E-01	2.0E-01	1.8E-01	4.4E-02	4.7E+00
Lung	8.0E-02	8.4E-02	8.0E-02	3.3E-02	3.3E+00
Skin	2.2E-02	2.2E-02	2.2E-02	2.2E-02	9.4E-01

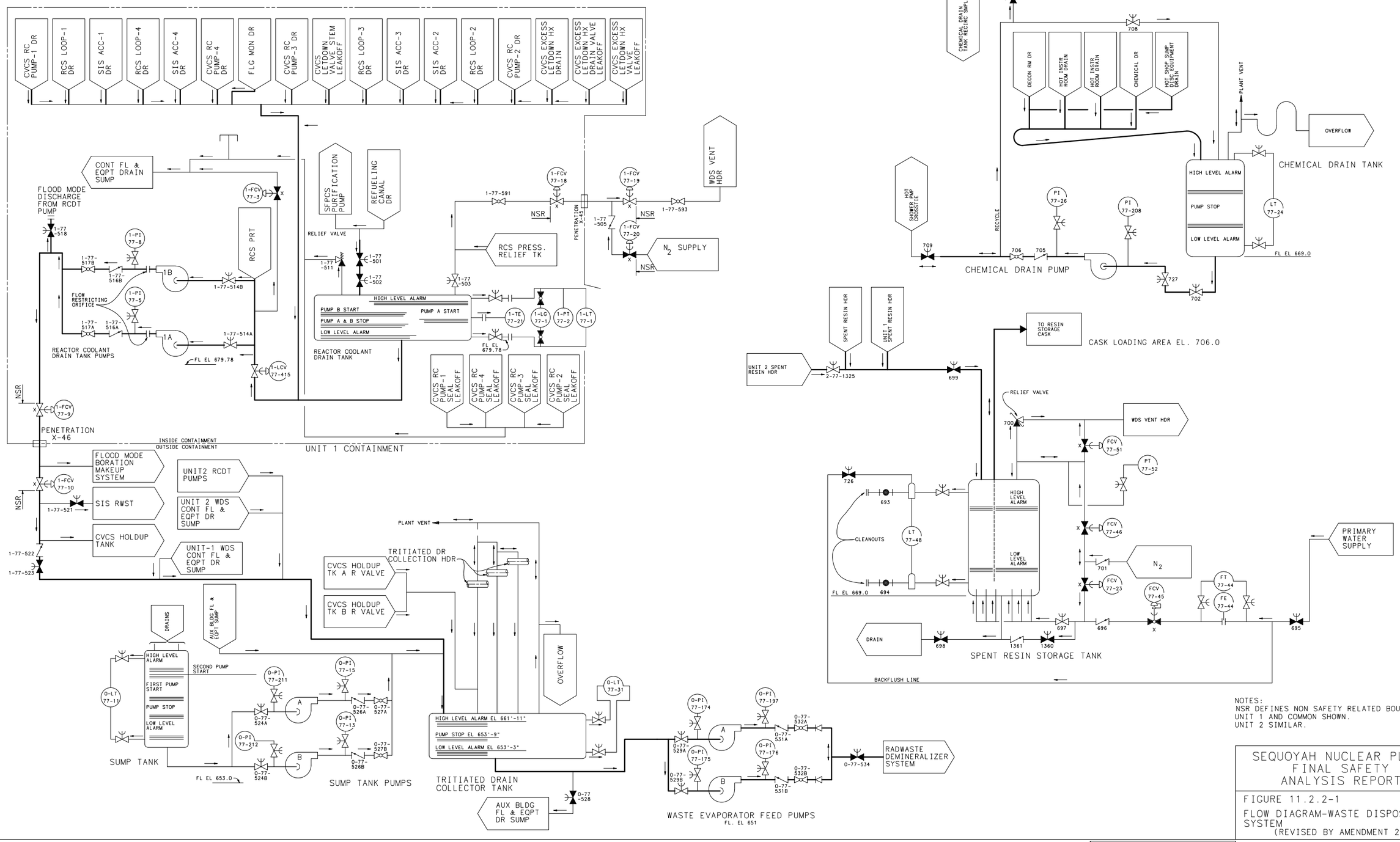

NOTES:
NSR DEFINES NON SAFETY RELATED BOUNDARY.
UNIT 1 AND COMMON SHOWN.
UNIT 2 SIMILAR.

SEQUOYAH NUCLEAR PLANT
FINAL SAFETY
ANALYSIS REPORT

FIGURE 11.2.2-1

FLOW DIAGRAM-WASTE DISPOSAL SYSTEM
(REVISED BY AMENDMENT 28)

CAD MAINTAINED DRAWING

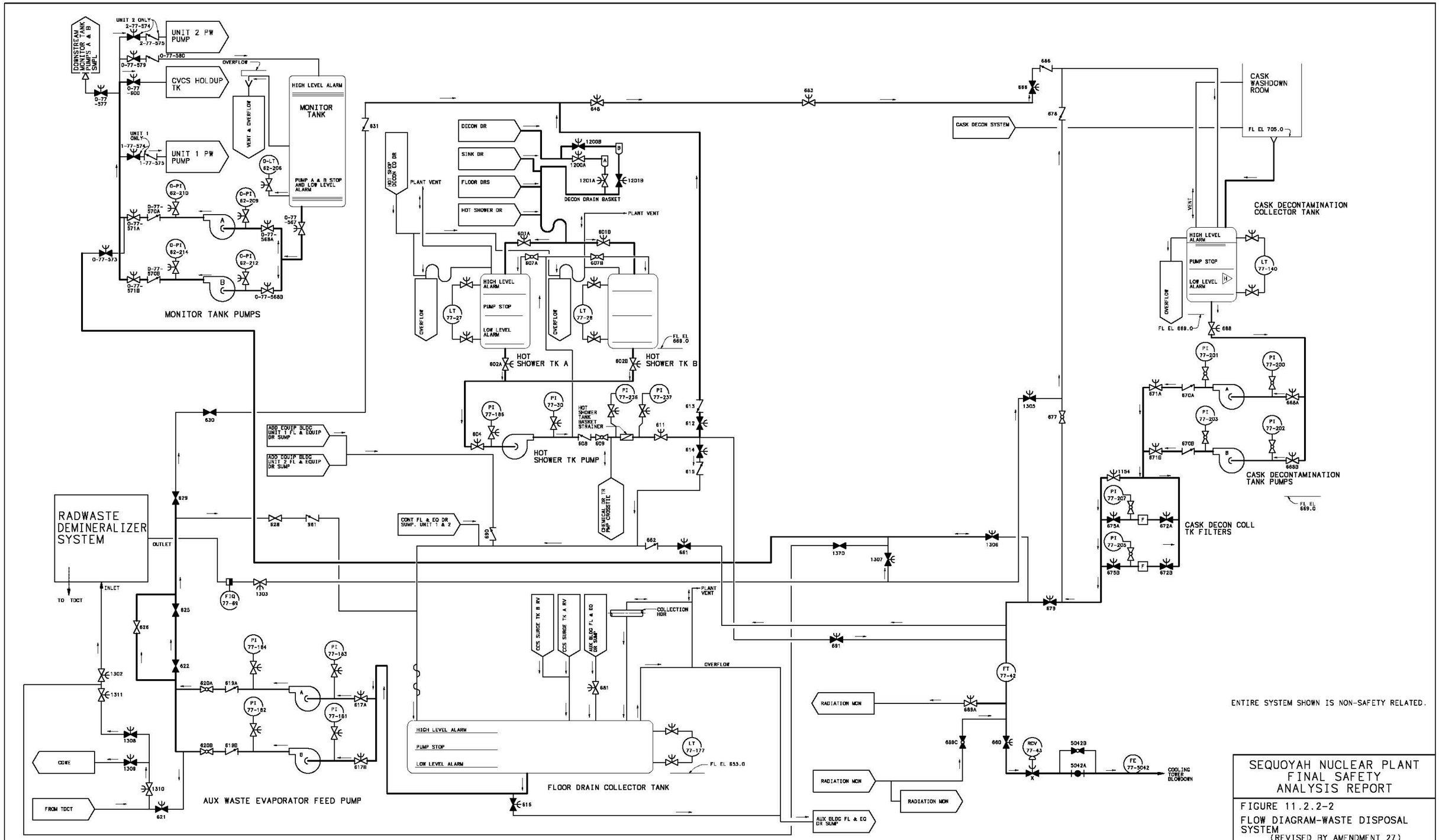

SEQUOYAH NUCLEAR PLANT
FINAL SAFETY
ANALYSIS REPORT

FIGURE 11.2.2-2

FLOW DIAGRAM-WASTE DISPOSAL SYSTEM
(REVISED BY AMENDMENT 27)

CAD MAINTAINED DRAWING

11.3 GASEOUS WASTE SYSTEMS

11.3.1 Design Objectives

The Gaseous Waste Processing System is designed to remove fission product gases from the reactor coolant and to permit operation with periodic discharges of small quantities of fission gases through the monitored plant vent. This is accomplished by internal recirculation of radioactive gases and holdup in the nine gas decay tanks to reduce the concentration of radioisotopes in the released gases.

The offsite exposure to individuals from gaseous effluents released during normal operation of the plant are limited by 10 CFR 50 Appendix I and 40 CFR 190.

Although plant operating procedures, equipment inspection, and preventive maintenance are performed during plant operations to minimize equipment malfunction, overall radioactive release limits have been established as a basis for controlling plant discharges during operation with the occurrence of a combination of equipment faults of moderate frequency. A combination of equipment faults which could occur with moderate frequency include operation with fuel defects in combination with such occurrences as:

1. Steam generator tube leaks.

2. Malfunction in Liquid Waste Processing System.

3. Malfunction of Gaseous Waste Processing System.

4. Excessive leakage in Reactor Coolant System equipment.

5. Excessive leakage in auxiliary system equipment.

The radioactive releases from the plant resulting from equipment faults of moderate frequency are within 10 CFR 20 limits.

11.3.2 System Description

The Gaseous Waste Processing System consists of two waste-gas compressor packages, nine gas decay tanks, and the associated piping, valves and instrumentation. The equipment serves both units. The system is shown on Diagram Figures 11.3.2-1 and 11.3.2-2.

Table 11.3.2-1 gives process parameters for key locations in the system.

The basis used for estimating the process parameters are given in Table 11.3.2-2.

Gaseous wastes can be received from the following: degassing of the reactor coolant and purging of the volume control tank prior to a cold shutdown, displacing of cover gases caused by liquid accumulation in the tanks connected to the vent header, purging of some equipment, sampling and gas analyzer operation, and boron recycle process operation (no longer in service).

Auxiliary Services

The auxiliary services portion of the Gaseous Waste Processing System consists of an online waste gas analyzer (WGA) and its instrumentation, valves, and tubing, a nitrogen and a hydrogen supply manifold and the necessary instrumentation, valves, and piping.

The online gas analyzer determines the quantity of oxygen and hydrogen in the waste gas tank that is in service. The Volume Control Tank, Pressurizer Relief Tank, Holdup Tanks, and Spent Resin Storage Tank may be analyzed by grab sample as plant conditions require.

The nitrogen and hydrogen supply packages are designed to provide a supply of gas to the Nuclear Steam Supply System. Nitrogen (N_2) supply for the Auxiliary and Reactor Buildings has two headers inside the Auxiliary Building, each with its own backup supply of high pressure N_2. Alignment is such that both headers are normally supplied by the liquid nitrogen skid located in the east Auxiliary Building yard. One header is for operation and one is for backup. Twenty-four N_2 cylinders per bank provide the backup N_2 supply or a trailer mounted N_2 tank can be connected near the liquid nitrogen skid. The pressure regulator in the nitrogen backup header is set slightly lower than that in the operating header. When nitrogen from the operating header is exhausted, its discharge pressure falls below the set pressure of the backup header, which comes into service automatically to ensure a continuous supply of nitrogen. An alarm alerts the operator that one header is exhausted. Hydrogen is supplied from two headers up into the reducing station for the Auxiliary Building at which point only one header supplies both units' VCTs. One serves as the operational header and the other serves as the backup header.

Nitrogen is supplied to the spent resin storage tank, reactor coolant drain tank, pressurizer relief tank, volume control tank, gas decay tanks and the holdup tanks. Hydrogen is supplied to the volume control tank.

The design and material of valves and manifolds are the same as for the main Gaseous Waste Processing System.

11.3.3 System Design

11.3.3.1 Component Design

Gaseous waste processing equipment parameters are given in Table 11.3.3-1. For further information on design codes and safety classes see Section 3.2. Design criteria for field run piping is given in Subsection 3.9.2.6.

Waste Gas Compressors

The two waste gas compressors are provided for continuous or batch removal of gases discharging to the vent header. One unit is supplied for normal operation and is capable of handling the gas from a holdup tank which is receiving letdown flow at the maximum rate. The second unit is provided for backup during peak load conditions, such as when degassing the reactor coolant or for service when the first unit is down for maintenance. Operation of either unit can be controlled manually or by vent header pressure. Each unit is sized for 40 cfm.

The compressors are of the liquid piston rotary type. Construction is of cast iron external and bronze internals with a stainless steel shaft.

Waste Gas Decay Tanks

Nine tanks are provided to hold radioactive waste gases for decay. This arrangement is adequate for a plant operating with one percent fuel defects. Nine tanks are provided so that during normal operation, a minimum of 60 days are available for decay.

The tanks are vertical cylindrical type and are constructed of carbon steel.

Valves

The valves handling gases are carbon steel, Saunders patent diaphragm type, which are designed to minimize stem leakage.

Piping

The piping for gaseous waste is carbon steel; all piping joints are welded except where flanged connections are necessary for maintenance.

11.3.3.2 Instrumentation Design

The main system instrumentation is shown on Figures 11.3.2-1 and 11.3.2-2.

The instrumentation readout is located mainly on the Waste Processing System panel in the auxiliary building. Some instruments have local readout at the equipment location.

All alarms are shown separately on the WPS panel.

An online gas analyzer is provided to monitor hydrogen and oxygen concentrations in the waste gas atmosphere. The analyzer indicates the oxygen and hydrogen concentrations and alarms at predetermined explosive levels of hydrogen and oxygen with oxygen the controlling parameter for taking corrective action. The analyzer is normally aligned to the inservice gas decay tank.

11.3.4 Operating Procedure

All equipment installed to reduce radioactive effluents to the minimum practicable level is maintained in good operating order and will be operated to the maximum extent practicable. In order to assure that these conditions are met, administrative controls are exercised on overall operation of the system; preventive maintenance is utilized to maintain equipment in peak condition. The preventive maintenance program is set up on a computer system which indicates preventive maintenance instructions for systems or components in the plant at appropriate intervals (monthly, quarterly, etc.).

Administrative controls are exercised through the use of instructions covering such areas as valve alignment for various operations, equipment operating instructions, and other instructions pertinent to the proper operation of the processing equipment. Discharge permit forms will be

utilized to assure proper procedures are followed and in assuring proper valve alignments and other operating conditions before a release. These forms will be signed and verified by those personnel performing the analysis and approving the release.

Preventive maintenance is carried out on all equipment as described in the preventive maintenance instructions which utilize manufacturers' instruction manuals for reference.

Gaseous wastes consist primarily of hydrogen stripped from the reactor coolant during boron dilution and degassing operations and nitrogen from the closed cover gas system. The components connected to the vent header are limited to those which contain no air or aerated liquids to prevent formation of a combustible mixture of hydrogen and oxygen.

Waste gases discharged to the vent header are pumped to a waste gas decay tank by one of the two waste gas compressors.

The standby compressor is capable of being started automatically when high pressure occurs in the vent header. The standby compressor can be started manually. The compressors may also be used to transfer gas between gas decay tanks. Normal operation of either compressor is in the manual mode.

To compress gas into the gas decay tanks, the operator selects two tanks at the WPS control panel, one to receive gas, and one for standby. The operator then manipulates the isolation valves for these two tanks so they are respectively aligned for service. When the tank in-service is pressurized to 100 psig, flow is automatically switched to the standby tank and an alarm alerts the operator to select/align a new standby tank. Tanks may be manipulated prior to 100 psig, manually, if desired.

The decay tank being filled is normally sampled by the gas analyzer and an alarm alerts the operator to a high oxygen content. On high oxygen signal, the tank must be isolated and operator action is required to direct flow to the standby tank and to select a new standby tank.

If it should become necessary to transfer gas from one decay tank to another, the tank to be emptied is discharged to the holdup tank return line. The tank to receive gas is opened to the inlet header and the return line pressure regulator set-point is raised to above 1.8 psig. The return line isolation valve is closed and the crossover between the return line and the compressor suction is opened. With this arrangement, gas is transferred by the compressor which is in service.

As the Chemical and Volume Control System holdup tanks liquid is withdrawn for processing to the portable radwaste demineralizer system, gas from the gas decay tanks is returned to the holdup tanks. The gas decay tank selected to supply the returning cover gas is aligned to the return header from the WPS control board and by manually opening the appropriate valve.

To maximize residence time for decay in the decay tanks, the last tank filled is the first tank aligned to the cover gas header. A backup supply of gas for the holdup tanks is provided by the nitrogen header.

Before a gas decay tank is discharged to the atmosphere via the plant vent, a gas sample is taken to determine activity concentration of the gas in the tank. The curie content versus

change in tank pressure is used to quantify the activity released along with time to determine the offsite dose for the release.

To release the gas, the appropriate local manual stop valve is opened to the plant vent and the gas discharge modulating valve is opened at the WPS control panel. If there should be a high activity level in the 2 inch discharge line during release, the modulating valve closes.

Refueling

When preparing the plant for a cold shutdown prior to refueling, it is necessary to degas the reactor coolant to reduce the hydrogen concentration to less than 5 cc/kg. At the start of the degassing operation, the volume control tank gas space contains H_2 and traces of fission gases. The operation involves the following steps.

1. Open the tank vent to the vent header

2. Raise the water level, forcing gases out of the tank, then close tank vent to vent header

3. Lower the water level and introduce nitrogen to restore normal gas pressure

4. Repeat steps 1 to 3 as needed until H_2 concentration is at desired level.

Gas evolved from the volume control tank during this operation is pumped by the waste-gas compressors to the gas-decay tanks.

Operation of the Gaseous Waste Processing System is the same during the actual refueling operation as during normal operation.

Auxiliary Services

During normal operation the Gaseous Processing System supplies nitrogen from the liquid nitrogen skid and hydrogen from trailer mounted cylinders to primary plant components. The hydrogen and nitrogen supply services are described in sections 9.5.8 and 9.5.9.

11.3.5 Performance Tests

Initial performance tests are performed to verify the operability of the components, instrumentation and control equipment.

During reactor operation the system is used at all times and hence is under continuous surveillance.

11.3.6 Estimated Releases

11.3.6.1 NRC Requirements

The following documents have been issued by the NRC to provide regulations and guidelines for radioactive releases:

1. 10 CFR 20, Standards for Protection Against Radiation.

2. 10 CFR 50, Domestic Licensing of Production and Utilization Facilities.

The total plant gaseous releases meet these regulations by providing assurance that the exposures to individuals in unrestricted areas are as low as practicable during normal plant operation and during anticipated operational occurrences.

11.3.6.2 Expected Gaseous Waste Processing System Releases

Gaseous Wastes consist primarily of hydrogen stripped from coolant discharged to the Boron Recycle System holdup tanks during boron dilution, nitrogen and hydrogen gases purged from the Chemical Volume and Control System volume control tank when degassing the reactor coolant, and nitrogen from the closed gas blanketing system. During normal gaseous radwaste processing, the gas holdup tank capacity permits at least 60 days decay for waste gases before discharge.

The quantities and isotopic concentration of gases discharged from the Gaseous Waste Processing System have been estimated. The analysis is based on engineering judgment with respect to the operation of the plant and realistic estimation of the input sources to the Gaseous Waste Processing System.

The associated releases in curies per year per nuclide are given in Table 11.3.6-2.

11.3.6.3 Releases from Ventilation Systems

A detailed review of the entire plant has been made to ascertain those items that could possibly contribute to airborne radioactive releases.

During normal plant operations, airborne noble gases and/or iodines can originate from reactor coolant leakage, equipment drains, venting and sampling, primary and/or secondary side leakage, condenser air ejector, gland seal condenser exhausts, Gaseous Waste Processing System leakage and dry cask storage operations inside the auxiliary building.

The assumptions used for this study are given in Table 11.3.6-1. The noble gases and iodines discharged from the various sources are entered in Table 11.3.6-2.

11.3.6.4 Estimated Total Releases

The estimated releases have been used in calculating the unrestricted area boundary doses as shown in Subsection 11.3.9.

The dose calculations, based on the estimated total plant releases, show that the releases are in accordance with the design objectives in Subsection 11.3.1 and meet the regulations as outlined in Paragraph 11.3.6.1. Further, the total plant releases are within the SQN Offsite Dose Calculation Manual (ODCM).

11.3.7 Release Points

Gaseous radioactive wastes are released to the atmosphere through vents located on the shield building, auxiliary building, turbine building, and service building. A brief description, including function and location of each type vent, is presented below.

Shield building vent -- Waste gases from the gas decay tanks are discharged to the environment through a shield building vent. Each shield building has one vent. ABGTS, EGTS, and Containment Purge exhausts to the shield building vents. The vent is of rectangular cross section (dimension - 2 feet by 7 feet 6 inches) and discharges approximately 130 feet above ground level. The location of the shield building vents is shown in the equipment layout drawings, Figure 1.2.3-1. The location of the shield building in relation to the site is shown on the site plot plan, Figure 2.1.2-1. All gases released from the shield building vent except for the air that passes through the containment purge air exhaust monitors are processed through HEPA filters and charcoal adsorbers prior to release. The effluent discharge rate through the vent is variable; occasionally during containment purge, the rate may approach a maximum value of 28,000 cfm in Modes 5 and 6. The flow path for waste gases exhausted through the vent from the gas decay tanks is shown in Figure 11.3.2-1. Also shown in this figure are a HEPA filter and charcoal adsorber which are provided to treat the gas released from the decay tanks.

Auxiliary building vent --Waste gases in the auxiliary building are discharged through the auxiliary building exhaust vent. The vent is of the chimney type having a rectangular cross section of 10 by 30 feet. The top of the vent is located atop the auxiliary building and discharges approximately 106 feet above grade. Under normal operating conditions, gases are continuously discharged through the vent. Effluent flow rates are near 228,000 cfm when two auxiliary building general exhaust fans and one fuel-handling area exhaust fan are operating at full capacity. Under accident conditions the auxiliary building is isolated, and the auxiliary building gas treatment system discharges at a rate of 9000 cfm to the reactor building exhaust vent. The location of the auxiliary building exhaust vent is shown in equipment layout diagram, Figure 1.2.3-1. The auxiliary building is shown on the site plot plan, Figure 2.1.2-1.

Turbine building vents --Ventilation air is exhausted from the turbine building through the turbine building vents. There are 18 vents at the 732-foot level and 20 vents at the 801-foot level (roof level). The effluent flow rates vary for each type of vent. Generally, the flow rates through a typical vent at the 732-foot level will not exceed 23,000 cfm and the flow rates through a typical vent at the 801-foot level will not exceed 36,000 cfm. The general arrangement of vents on the turbine building is shown on Figures 1.2.3-1 and 1.2.3-3. The turbine building is shown on the site plot plan, Figure 2.1.2-1.

Condenser vacuum exhaust vent --Gaseous wastes from the condenser are discharged through the condenser vacuum exhaust vent. The vent, which is a 12-inch diameter pipe, is located on the turbine building roof and discharges approximately 96 feet above grade. Under normal operating conditions the discharge flow rate is less than 20 cfm. Forty-five cfm can be used as the default flow rate for conservatism in the dose rate calculation. The location of the condenser vacuum exhaust on the turbine building is shown on Figure 1.2.3-1.

Service building vent --Potentially radioactive waste gases from the radiochemical laboratory, titration room, and RCA access control area are exhausted to the Service Building vent. This exhausts at a total design flow of approximately 11,200 cfm. The Service Building vent is located on the service building roof. The vent discharges to the atmosphere approximately 24 feet above grade. When exhausting at full capacity from the radiochemical laboratory and the titration room, the combined flow rate is approximately 5,000 cfm. Air from the radiochemical laboratory and titration room is exhausted via fume hoods through HEPA filters. The service building is shown on the site plot plan, Figure 2.1.2-1.

Containment venting --Excess air inside lower containment is exhausted through the reactor building purge vent valves directly into the annulus where the annulus vacuum control system will discharge the effluent through the auxiliary building exhaust vent. See FSAR 9.4.7.2 for additional information.

11.3.8 Atmospheric Dilution

Calculations of atmospheric transport, dispersion, and ground deposition are based on the straight-line airflow model discussed in NRC Regulatory Guide 1.111 (Revision 1, July 1977). All releases are assumed to be continuous. Releases known to be periodic, e.g., those during containment purging and waste gas decay tank venting, are treated as continuous releases.

Releases from the reactor building (RB), turbine building (TB), and auxiliary building (AB) vents are treated as ground level. The joint percentage frequency distributions of 10-meter wind speed and direction, for the pasquill stability classes A through G, that are used in the straight-line model are given in the Tables 2.3.2-23 through 2.3.2-29 for the period 1972-1975. These distributions were used in the calculation of atmospheric dilution factors for a ground level release.

11.3.9 Estimated Doses from Radionuclides in Gaseous Effluents

Individuals are exposed to gaseous effluents via the following pathways: (1) external radiation from radioactivity in the air and on the ground; (2) inhalation; (3) ingestion of beef, vegetables, and milk; and (4) tritium transpiration. No other additional exposure pathway has been identified which would contribute 10 percent or more to either individual or population doses.

11.3.9.1 Assumptions and Calculational Methods

External air exposures are evaluated at points of potential maximum exposure (i.e., points at the unrestricted area boundary). External skin and total body exposures are evaluated at nearby residences. The dose to the target organ from radioiodines and particulates is calculated for real pathways existing at the site. These points of interest are listed in Table 11.3.9-1 and 11.3.9-2.

To evaluate the potential target organ dose, nearest gardens, and milk animals were identified by a detailed survey within five miles of the plant. Information on grazing seasons and feeding patterns are reflected in the feeding factor specified in Table 11.3.9-2 for dairy animals. The feeding factor is the fraction of the year an animal grazes on pasture.

In calculating population doses, TVA assumes that enough fresh vegetables are produced at each residence to supply annual consumption by all members of that household. Also, TVA assumes that enough meat and milk is produced in each sector annually to supply the needs of that region. The projected population distribution within 50 miles of Sequoyah is given in Table 11.3.9-3.

Doses are calculated using the dose factors and methodology contained in NRC Regulatory Guide 1.109, Rev. 1 and NUREG/CR-1004 with certain exceptions as follows:

1. Inhalation doses are based on the average individuals' inhalation rates found in ICRP Publication 23 of 1,400, 5,500, 8,000, and 8,100 m^3/year for infant, child, teen, and adult, respectively.

2. The milk ingestion pathway has been modeled to include specific information on grazing periods for milk animals obtained from a detailed farm survey. A feeding factor (FF) has

been defined as that fraction of total feed intake a dairy animal consumes that is from fresh forage. The remaining portion of feed (1-FF) is assumed to be from stored feed. Doses calculated from milk produced by animals consuming fresh forage are multiplied by these factors. Concentrations of radioactivity in stored feed are adjusted to reflect radioactive decay during the maximum assumed storage period of 180 days by the factor:

$$\frac{1}{180}\int_{0}^{180} \exp(-\lambda_i t)dt = \frac{1-\exp(-\lambda_i 180)}{180\,\lambda_i}$$

This factor replaces the factor exp $(-\lambda_i t_h)$ in equation C-5 of Regulatory Guide 1.109.

3. The stored vegetable and beef ingestion pathways have been modeled to reflect more accurately the actual dietary characteristics of individuals. For stored vegetables the assumption is made that home grown stored vegetables are consumed when fresh vegetables are not available, i.e., during the 9 months of fall, winter, and spring. Rather than use a constant storage period of 60 days, radioactive decay is accounted for explicitly during the 275-day consumption period. The radioactive decay correction is calculated by:

$$\frac{1}{275}\int_{0}^{275} \exp(\lambda_i t)dt = \frac{1-\exp(-\lambda_i 275)}{275\,\lambda_i}$$

This replaces the term exp ($-\lambda_i$ th) in equation C-5 of Regulatory Guide 1.109.

4. The beef consumption pathways can be divided into either commercial sales or home use pathways. Dose calculations are made for individuals consuming meat produced for home use. The normal processing route is for an individual to slaughter the beef animal, package and freeze the meat, and then consume the meat during the next 3-month period. Radioactive decay is calculated during the 3-month period by

$$\frac{1}{90}\int_{0}^{90} \exp(\lambda_i t)dt = \frac{1-\exp(-\lambda_i 90)}{90\,\lambda_i}$$

This term is multiplied into equation C-12 in Regulatory Guide 1.109. If the beef animals are sold commercially, then individuals would not be exposed continuously to meat containing radioactivity from the same farm. It is expected that this pathway will not cause significant individual exposures.

Population doses are based on a U.S. population distribution of:

Category	Ages (A)*	Fraction
Infant	A<1	0.015
Child	1 ≤ A<12	0.168
Teen	12 ≤ A<20	0.153
Adult	20 ≤ A	0.665

*e.g., someone who is 1 year, 11 months is an infant, while someone who is exactly two years old is a child.

Tables 11.3.9-4 and 11.3.9-5 provide the doses estimated for individuals and the population within 50 miles of the plant site.

11.3.9.2 Summary of Annual Population Doses

TVA has estimated the radiological impact to regional population groups in the year 2010 from the normal operation of the Sequoyah Nuclear Plant. Table 11.3.9-5 summarizes these population doses. The total body dose from background to individuals within the United States ranges from approximately 100 mrem to 250 mrem per year. The annual total body dose due to background for a population of about 975,000 persons expected to live within a 50-mile radius of the Sequoyah Nuclear Plant in the year 2010 is calculated to be approximately 141,400 man-rem assuming 145 mrem/year/individual. By comparison, the same population (excluding onsite radiation workers) will receive a total body dose of approximately 7.3 man-rem from effluents released from the Sequoyah Nuclear Plant. Based on these results, TVA concludes that the normal operation of the Sequoyah Nuclear Plant will present minimal risk to the health and safety of the public.

11.3.10 References

11.3.10.1 SQN-TI-534, Annual Routine Radioactive Airborne Releases from the Operation of One Unit.

11.3.10.2 Sequoyah Nuclear Plant Estimated Doses from Radionuclides Gaseous Effluents Analysis. (FSAR 11.3.9) RIMS B38 990712 801

SQN

TABLE 11.3.2-1 (Sheet 1)

PROCESS PARAMETERS AND EXPECTED ACTIVITIES IN GASEOUS WASTE SYSTEM

		Pressure (PSIG)	Temp. (°F)	Flow Rate (cc/day)	(CONCENTRATIONS IN μci/cc)									
					KR83M	KR85M	KR85	KR87	KR88	KR89	XE131M	XE133M	KE133	XE135M
1	Unit 1 RCDT Vent	1.5	170 max.	1.14(+6)	7.4E-04	9.8E-04	1.1E-02	5.4E-03	8.4E-03	6.6E-06	9.0E-03	9.7E-04	1.6E+00	8.1E-05
2	Unit 2 RCDT Vent	1.5	170 max.	1.14(+6)	7.4E-04	9.8E-04	1.1E-02	5.4E-03	8.4E-03	6.6E-06	9.0E-06	9.7E-04	1.6E+00	8.1E-05
3	Sampling System VCT Vent Unit 1	1.5	115	0	0.0E+00	0.0E+00	0.0E+00	0.0E+00	0.0E+00	0.0E+00	0.0E+00	0.0E+00	0.0E+00	0.0E+00
4	Sampling System VCT Vent Unit 2	1.5	115	0	0.0E+00	0.0E+00	0.0E+00	0.0E+00	0.0E+00	0.0E+00	00E+00	0.0E+00	0.0E+00	0.0E+00
5	BRS HT Vent	-	-	2.18(+7)	5.4E-05	6.0E-05	9.9E-03	9.3E-04	6.8E-04	3.9E-07	6.9E-03	5.9E-05	9.6E-01	4.9E-06
6	Gas Analyzer	-	-	0	0.0E+00	0.0E+00	0.0E+00	0.0E+00	0.0E+00	0.0E+00	0.0E+00	0.0E+00	0.0E+00	0.0E+00
7	Waste Disposal System SRST Vent	-	-	0	0.0E+00	0.0E+00	0.0E+00	0.0E+00	0.0E+00	0.0E+00	0.0E+00	0.0E+00	0.0E+00	0.0E+00
8	BRS Evaporator Unit 1 Vent	1.5	155	3.82(+5)	3.6E-03	4.0E-03	2.0E.00	6.7E-02	4.6E-02	2.6E-05	1.1E+00	3.9E-03	1.3E+02	3.2E-04
9	BRS Evaporator Unit 2 Vent	1.5	155	3.82(+5)	3.6E-03	4.0E-03	2.0E+00	6.7E-02	4.6E-02	2.6E-05	1.1E+00	3.9E-03	1.3E+02	3.2E-04
10	CVCS VCT Vent Unit 1	1.5	115	0	2.7E-02	2.7E-01	1.2E+00	5.4E-02	3.5E-01	2.2E-04	6.5E-01	1.2E+00	1.1E+02	2.7E-03
11	CVCS VCT Vent Unit 2	1.5	115	0	2.7E-02	2.7E-01	1.2E+00	5.4E-02	3.5E-01	2.2E-04	6.5E-01	1.2E+00	1.1E+02	2.7E-03
12	Combination of Normal 1/p to WPS(G)	1.5	VAR	2.48(+7)	3.4E-04	3.9E-04	1.3E-01	5.4E-03	4.2E-03	2.5E-06	7.6E-02	3.3E-04	8.8E+00	3.2E-06
13	Compressor Recirculation Line	1.5	140	0	3.4E-04	3.9E-04	1.3E-01	5.4E-03	4.2E-03	2.5E-06	7.6E-02	3.6E-04	8.8E+00	3.2E-06
14	Compressor Inlet	1.5	VAR	2.48(+7)	3.4E-04	3.9E-04	1.3E-01	5.4E-03	4.2E-03	2.5E-06	7.6E-02	3.5E-04	8.8E+00	3.2E-05

SQN

TABLE 11.3.2-1 (Sheet 2)

PROCESS PARAMETERS AND EXPECTED
ACTIVITIES IN GASEOUS WASTE SYSTEM

		Pressure (PSIG)	Temp. (°F)	Flow Rate (cc/day)	(CONCENTRATIONS IN μci/cc)									
					KR83M	KR85M	KR85	KR87	KR88	KR89	XE131M	XE133M	KE133	XE135M
15	Compressor Inlet	0.5	VAR	2.48(+7)	3.4E-04	3.9E-04	1.3E-01	5.4E-03	4.2E-03	2.5E-06	7.6E-02	3.9E-04	8.8E+00	3.2E-05
16	Downstream of Compressor	110 max.	140	2.48(+7)	3.4E-04	3.9E-04	1.3E-01	5.4E-03	4.2E-03	2.5E-06	7.6E-02	3.8E-04	8.8E+00	3.2E-05
17	Compressor Outlet to WGDTs	-	-	0	3.4E-04	3.9E-04	1.3E-01	5.4E-03	4.2E-03	2.5E-06	7.6E-02	3.8E-04	8.8E+00	3.2E-05
18	Inlet to Filling WGDTs	110 max.	140	2.48(+7)	3.4E-04	3.9E-94	1.3E-01	5.4E-03	4.2E-03	2.5E-06	7.6E-02	3.8E-04	8.8E+00	3.2E-05
19	Line to WGDT Header	110	AMB	VAR	7.5E-06	2.0E-06	1.3E-01	8.1E-04	1.4E-04	1.6E-09	6.6E-02	1.8E-02	6.4E+00	9.6E-05
20	Discharge Line	20	AMB	VAR	0.0E+00	0.0E+00	1.3E-01	0.0E+00	0.0E+00	0.0E+00	1.9E-03	0.0E+00	2.3E-03	0.0E+00
21	Discharge Line	1	AMB	VAR	0.0E+00	0.0E+00	1.3E-01	0.0E+00	0.0E+00	0.0E+00	1.9E-03	0.0E+00	2.3E-03	0.0E+00
22	Gas Analyzer	5 to 20	AMB	0	0.0E+00	0.0E+00	0.0E+00	0.0E+00	0.0E+00	0.0E+00	0.0E+00	0.0E+00	0.0E+00	0.0E+00
23	From WGDTs To Compressor Inlet	110	AMB	1.64(+8)	7.5E-06	2.0E-06	1.3E-01	8.1E-04	1.4E-04	1.6E-09	0.6E-02	1.2E-06	6.4E+00	9.6E-05
24	From WGDTs To BRS HTs	3	AMB	1.64(+8)	7.5E-06	2.0E-06	1.3E-01	8.1E-04	1.4E-04	1.6E-09	6.6E-02	1.2E-06	6.4E+00	9.6E-05

SQN

TABLE 11.3.2-1 (Sheet 3)

PROCESS PARAMETERS AND EXPECTED ACTIVITIES IN GASEOUS WASTE SYSTEM

		Pressure (PSIG)	Temp. (°F)	Flow Rate (cc/day)	(CONCENTRATIONS IN μci/cc)								
					XE135	XE137	XE138	I130	I131	I132	I133	I134	I135
1	Unit 1 RCDT Vent	1.5	170 max.	1.14(+6)	2.6E-02	1.4E-05	2.9E-04	1.2E-05	2.0E-03	1.9E-04	2.4E-03	4.0E-05	8.0E-04
2	Unit 2 RCDT Vent	1.5	170 max.	1.14(+6)	2.6E-02	1.4E-05	2.9E-04	1.2E-05	2.0E-03	1.9E-04	2.4E-03	4.0E-05	8.0E-04
3	Sampling System VCT Vent Unit 1	1.5	115	0	0.0E+00	0.0E+00	0.0E+00	0.0E+00	0.0E+00	0.0E+00	0.0E+00	0.0E+00	0.0E+00
4	Sampling System VCT Vent Unit 2	1.5	115	0	0.0E+00	0.0E+00	0.0E+00	0.0E+00	0.0E+00	0.0E+00	0.0E+00	0.0E+00	0.0E+00
5	BRS HT Vent	-	-	2.18(+7)	3.6E-03	8.2E-07	1.8E-05	1.6E-07	1.4E-04	1.4E-06	4.6E-05	2.7E-07	7.9E-00
6	Gas Analyzer	-	-	0	0.0E+00	0.0E+00	0.0E+00	0.0E+00	0.0E+00	0.0E+00	0.0E+00	0.0E+00	0.0E+00
7	Waste Disposal System SRST Vent	-	-	0	0.0E+00	0.0E+00	0.0E+00	0.0E+00	0.0E+00	0.0E+00	0.0E+00	0.0E+00	0.0E+00
8	BRS Evaporator Unit 1 Vent	1.5	155	3.82(+5)	2.5E-01	5.4E-05	1.2E-03	0.0E+00	0.0E+00	0.0E+00	0.0E+00	0.0E+00	0.0E+00
9	BRS Evaporator Unit 2 Vent	1.5	155	3.82(+5)	2.5E-01	5.4E-05	1.2E-03	0.0E+00	0.0E+00	0.0E+00	0.0E+00	0.0E+00	0.0E+00
10	CVCS VCT Vent Unit 1	1.5	115	0	1.2E+00	4.7E-04	9.7E-03	0.0E+00	0.0E+00	0.0E+00	0.0E+00	0.0E+00	0.0E+00
11	CVCS VCT Vent Unit 2	1.5	115	0	1.2E+00	4.7E-04	9.7E-03	0.0E+00	0.0E+00	0.0E+00	0.0E+00	0.0E+00	0.0E+00
12	Combination of Normal 1/p to WPS(G)	1.5	VAR	2.48(+7)	2.1E-02	5.3E-06	1.1E-04	1.2E-06	3.1E-04	1.9E-05	2.6E-04	3.8E-06	8.0E-05
13	Compressor Recirculation Line	1.5	140	0	2.1E-02	5.3E-06	1.1E-04	1.2E-06	3.1E-04	1.9E-05	2.6E-04	3.8E-06	8.0E-05
14	Compressor Inlet	1.5	VAR	2.48(+7)	2.1E-02	5.3E-06	1.1E-04	1.2E-06	3.1E-04	1.9E-05	2.6E-04	3.8E-06	8.0E-05

SQN

TABLE 11.3.2-1 (Sheet 4)

PROCESS PARAMETERS AND EXPECTED
ACTIVITIES IN GASEOUS WASTE SYSTEM

		Pressure (PSIG)	Temp. (°F)	Flow Rate (cc/day)	(CONCENTRATIONS IN μci/cc)								
					XE135	XE137	XE138	I130	I131	I132	I133	I134	I135
15	Compressor Inlet	0.5	VAR	2.48(+7)	2.1E-02	5.3E-06	1.1E-04	1.2E-06	3.1E-04	1.9E-05	2.6E-04	3.8E-06	8.0E-05
16	Downstream of Compressor	110 max.	140	2.48(+7)	2.1E-02	5.3E-06	1.1E-04	1.2E-06	3.1E-04	1.9E-05	2.6E-04	3.8E-06	8.0E-05
17	Compressor Outlet to WGDTs	-	-	0	2.1E-02	5.3E-06	1.1E-04	1.2E-06	3.1E-04	1.9E-05	2.6E-04	3.8E-06	8.0E-05
18	Inlet to Filling WGDTs	110 max.	140	2.48(+7)	2.1E-02	5.3E-06	1.1E-04	1.2E-06	3.1E-04	1.9E-05	2.6E-04	3.8E-06	8.0E-05
19	Line to WGDT Header	110	AMB	VAR	2.3E-03	4.0E-09	3.8E-07	1.8E-07	2.5E-04	5.1E-07	6.4E-05	3.9E-08	6.3E-06
20	Discharge Line	20	AMB	VAR	0.0E+00	0.0E+00	0.0E+00	0.0E+00	1.5E-06	0.0E+00	0.0E+00	0.0E+00	0.0E+00
21	Discharge Line	1	AMB	VAR	0.0E+00	0.0E+00	0.0E+00	0.0E+00	1.5E-06	0.0E+00	0.0E+00	0.0E+00	0.0E+00
22	Gas Analyzer	5 to 20	AMB	0	0.0E+00	0.0E+00	0.0E+00	0.0E+00	0.0E+00	0.0E+00	0.0E+00	0.0E+00	0.0E+00
23	From WGDTs To Compressor Inlet	110	AMB	1.64(+8)	2.3E-03	4.0E-09	3.8E-07	1.8E-07	2.5E-04	5.1E-07	6.4E-05	3.9E-08	6.3E-06
24	From WGDTs To BRS HTs	3	AMB	1.64(+8)	2.3E-03	4.0E-09	3.8E-07	1.8E-07	2.5E-04	5.1E-09	6.4E-05	3.9E-08	6.3E-06

Note: The original values were provided in FSAR Reference 11.1.4.6.

TABLE 11.3.2-2

ASSUMPTION USED IN CALCULATING EXPECTED SYSTEM ACTIVITIES AND RELEASES FROM THE GASEOUS WASTE SYSTEM

1. Containment gaseous source terms are based on a 3%/day (noble gas) and 8.0E-4/day (iodines) release of RCS coolant into the containment airborne atmosphere.

2. Waste gas decay tank releases are based on a 173 ft^3/day (@ standard temperature and pressure) input of RCS coolant offgas to the waste gas disposal system and a waste gas decay tank holdup time of 60 days.

3. Auxiliary Building ventilation noble gas source terms are based on a 160 lb/day release of RCS coolant activity into the Auxiliary Building atmosphere.

4. Auxiliary Building ventilation iodine releases are based on 1.85 Ci/yr per μCi/g of RCS for 300 days and 6.8 Ci/yr per μCi/g for 65 days.

5. Refueling area iodine releases are based on 0.16 Ci/yr per μCi/g of RCS for 300 days and 0.3 Ci/yr per μCi/g for 65 days.

6. Turbine Building ventilation noble gas source terms are based on a 1700 lb/hr release of secondary steam into the Turbine Building atmosphere.

7. Turbine Building ventilation iodine source terms are based on 8500 Ci/yr per μCi/g of secondary steam for 300 days and 1400 Ci/yr per μCi/g for 65 days.

8. Condenser vacuum exhaust vent noble gas source terms are based on a steam flowrate to the condenser of 8.5E6 lb/hr as secondary steam activities.
.

9. Condenser vacuum exhaust vent iodine source terms are based on a 3500 Ci/yr per μCi/g of secondary steam released to the condenser vacuum exhaust vent.

10. Ar-41 releases are 34 Ci/yr.

11. Total tritium releases are based on 0.4 Ci/yr per MWt with 10% of that available for release via gaseous pathways and a power level of 3425 MWt.

12. C-14 releases are 1.6 Ci/yr from containment, 4.5 Ci/yr from the Auxiliary Building, and 1.2 Ci/yr from the WGS for a total of 7.3 Ci/yr.

13. The WGS discharge is filtered with a HEPA (efficiency of 99%) and charcoal (efficiency 70%) filter prior to release.

Refer to Reference 11.3.10.1

TABLE 11.3.3-1

GASEOUS WASTE PROCESSING SYSTEM COMPONENT DATA*

Waste Gas Compressors

Number	2
TypeLiquid piston rotary type	
Design flow rate, N_2 (inlet at 140°F, 2 psig), cfm	40
Design pressure, psig	150
Design temperature, °F	180
Normal operating pressure, psig	
Suction	0.5 - 2.0
Discharge	0 - 110
Normal operating temperature, °F	70 - 130

Gas Decay Tanks

Number	9
Volume, each ft^3	600
Design pressure, psig	150
Design temperature, °F	180
Normal operating pressure, psig	0 - 100
Normal operating temperature, °F	50 - 140
Material of construction	Carbon steel

*For design codes and safety classes, see Section 3.2.

Refer to FSAR Reference 11.3.10.1.

SQN

TABLE 11.3.6-1

RELEASE STUDY INPUT PARAMETERS

Leak Ratio into Lower Containment Atmosphere		
	Noble Gases - lb/day	1.5E4
	Iodine - lb/day	4.0
	Others - lb/day	1.6
Upper Containment Free Volume - ft^3		6.5×10^5
Lower Containment Free Volume - ft^3		4.0×10^5
Instrument Room Free Volume - ft^3		1.9×10^4
Exchange flow rate between upper and lower containment - cfh		71,600
Exchange flow rate between lower containment and instrument room - cfh		1,200
Purge flow rate from containment,	Upper - cfm	15,000
	Lower - cfm	7,500
	Instrument Room - scfm	540
Purge flow from Instrument Room to Lower Containment - scfm		110
Number of purges per year per unit		26
Length of purge - hr		12
Containment vent flow to annulus - scfm		1000
Number of containment vents per day		4
Length of containment vent - hr		0.6

FSAR TABLE - 11.3.6-2 (Sheet 1)

ANTICIPATED ANNUAL RADIOACTIVE GASEOUS RELEASES (CURIES/REACTOR-YEAR)

	Nuclide	WDS CTM Bldg	CTM Vent CTM Bldg	CTM Purge CTM Bldg	Aux Bld VE&RF Aux Bldg	TB Vent TurbBldg	Cond CVE TurbBldg	Total 1-Unit
1.	KRM 85	3.73E-97	1.58E+01	1.99E+01	4.53E+00	2.45E-04	1.23E+00	4.15E+01
2.	KR 85	4.63E+00	6.13E+02	6.85E+02	7.05E+00	3.72E-04	1.86E+00	1.31E+03
3.	KR 87	0.00E+00	3.17E+00	1.09E+01	4.27E+00	2.18E-04	1.09E+00	1.94E+01
4.	KR 88	0.00E+00	1.65E+01	2.83E+01	7.95E+00	4.27E-04	2.13E+00	5.49E+01
5.	XEM 131	3.52E-01	1.13E+03	1.17E+03	1.73E+01	9.06E-04	4.53E+00	2.32E+03
6.	XEM 133	1.14E-08	5.57E+01	4.63E+01	1.90E+00	1.04E-04	5.21E-01	1.04E+02
7.	XE 133	1.72E-02	3.29E+03	3.12E+03	6.70E+01	3.55E-03	1.77E+01	6.48E+03
8.	XEM 135	0.00E+00	2.02E-01	3.85E+00	3.68E+00	1.96E-04	9.80E-01	8.71E+00
9.	XE 135	6.01E-47	1.68E+02	1.55E+02	2.40E+01	1.29E-03	6.46E+00	3.53E+02
10.	XE 137	0.00E+00	3.65E-03	3.18E-01	9.67E-01	5.15E-05	2.58E-01	1.55E+00
11.	XE 138	0.00E+00	1.55E-01	3.32E+00	3.42E+00	1.81E-04	9.06E-01	7.80E+00
12.	AR 41	0.00E+00	3.40E+01	0.00E+00	0.00E+00	0.00E+00	0.00E+00	3.41E+01
13.	BR 84	0.00E+00	2.29E-05	6.00E-05	5.00E-02	6.92E-06	3.35E-06	5.01E-02
14.	I 131	1.44E-03	1.95E-02	5.84E-03	1.39E-01	1.02E-04	4.94E-05	1.66E-01
15.	I 132	0.00E+00	2.76E-03	1.60E-03	6.56E-01	2.44E-04	1.18E-04	6.61E-01
16.	I 133	1.16E-21	1.50E-02	3.55E-03	4.35E-01	2.92E-04	1.41E-04	4.54E-01
17.	I 134	0.00E+00	1.10E-03	1.66E-03	1.06E+00	2.12E-04	1.03E-04	1.06E+00
18.	I 135	4.08E-66	1.01E-02	3.16E-03	8.10E-01	4.48E-04	2.17E-04	8.24E-01
19.	RB 88	0.00E+00	1.79E+01	2.15E-01	1.37E-15	1.61E-20	0.00E+00	1.81E+01
20.	CS 134	0.00E+00	1.76E-03	1.96E-05	4.21E-20	2.18E-21	0.00E+00	1.78E-03
21.	CS 136	0.00E+00	1.67E-04	1.73E-06	5.18E-21	2.57E-22	0.00E+00	1.68E-04
22.	CS 137	0.00E+00	2.37E-03	2.64E-05	5.59E-20	2.82E-21	0.00E+00	2.39E-03
23.	H 3	0.00E+00	2.31E+02	9.91E+00	1.39E-15	9.24E-16	0.00E+00	2.41E+02
24.	NA 24	0.00E+00	1.48E-03	1.21E-05	2.82E-19	8.54E-21	0.00E+00	1.49E-03
25.	CR 51	0.00E+00	6.85E-04	7.38E-06	1.86E-20	6.99E-22	0.00E+00	6.92E-04
26.	MN 54	0.00E+00	3.96E-04	4.42E-06	9.58E-21	3.66E-22	0.00E+00	4.01E-04
27.	FE 55	0.00E+00	3.01E-04	3.35E-06	7.18E-21	2.77E-22	0.00E+00	3.04E-04
28.	FE 59	0.00E+00	6.97E-05	7.61E-07	1.80E-21	6.77E-23	0.00E+00	7.05E-05
29.	CO 58	0.00E+00	1.10E-03	1.21E-05	2.76E-20	1.04E-21	0.00E+00	1.11E-03
30.	CO 60	0.00E+00	1.34E-04	1.49E-06	3.18E-21	1.22E-22	0.00E+00	1.35E-04
31.	ZN 65	0.00E+00	1.27E-04	1.41E-06	3.06E-21	1.11E-22	0.00E+00	1.28E-04
32.	SR 89	0.00E+00	3.27E-05	3.58E-07	8.38E-22	3.22E-23	0.00E+00	3.30E-05
33.	SR 90	0.00E+00	3.02E-06	3.37E-08	7.18E-23	2.77E-24	0.00E+00	3.05E-06
34.	SR 91	0.00E+00	2.03E-05	1.84E-07	5.72E-21	1.61E-22	0.00E+00	2.04E-05
35.	Y 90	0.00E+00	3.02E-06	3.37E-08	7.18E-23	2.77E-21	0.00E+00	3.05E-06
36.	YM 91	0.00E+00	1.26E-05	1.08E-07	2.89E-21	2.75E-23	0.00E+00	1.27E-05
37.	Y 91	0.00E+00	2.71E-06	3.00E-08	3.18E-23	1.23E-24	0.00E+00	2.74E-06
38.	Y 93	0.00E+00	9.36E-05	8.37E-07	2.50E-20	7.01E-22	0.00E+00	9.44E-05

FSAR TABLE - 11.3.6-2 (Sheet 2)

ANTICIPATED ANNUAL RADIOACTIVE GASEOUS RELEASES (CURIES/REACTOR-YEAR)

	Nuclide	WDS CTM Bldg	CTM Vent CTM Bldg	CTM Purge CTM Bldg	Aux Bld VE&RF Aux Bldg	TB Vent TurbBldg	Cond CVE TurbBldg	Total 1-Unit
39.	ZR 95	0.00E+00	9.28E-05	1.02E-06	2.34E-21	8.76E-23	0.00E+00	9.38E-05
40.	NB 95	0.00E+00	7.29E-05	8.19E-07	1.68E-21	6.32E-23	0.00E+00	7.37E-05
41.	MO 99	0.00E+00	6.22E-04	5.34E-06	3.84E-20	1.34E-21	0.00E+00	6.27E-04
42.	TCM 99	0.00E+00	5.81E-04	4.94E-06	2.87E-20	6.80E-22	0.00E+00	5.86E-04
43.	RU 103	0.00E+00	1.72E-03	1.88E-05	4.50E-20	1.78E-21	0.00E+00	1.74E-03
44.	RU 106	0.00E+00	2.25E-02	2.50E-04	5.40E-19	2.00E-20	0.00E+00	2.27E-02
45.	RHM 103	0.00E+00	1.73E-03	1.88E-05	4.50E-20	1.78E-21	0.00E+00	1.74E-03
46.	RH 106	0.00E+00	2.25E-02	2.50E-04	5.40E-19	1.85E-20	0.00E+00	2.27E-02
47.	TEM 129	0.00E+00	4.29E-05	4.66E-07	1.14E-21	4.33E-23	0.00E+00	4.34E-05
48.	TE 129	0.00E+00	7.31E-05	2.01E-06	1.29E-19	1.27E-21	0.00E+00	7.51E-05
49.	TEM 131	0.00E+00	8.31E-05	6.53E-07	9.02E-21	3.04E-22	0.00E+00	8.37E-05
50.	TE 131	0.00E+00	1.79E-05	4.32E-07	3.46E-20	1.65E-22	0.00E+00	1.83E-05
51.	TE 132	0.00E+00	1.83E-04	1.61E-06	1.02E-20	3.68E-22	0.00E+00	1.85E-04
52.	BAM 137	0.00E+00	2.23E-03	2.48E-05	5.33E-20	2.71E-21	0.00E+00	2.25E-03
53.	BA 140	0.00E+00	2.51E-03	2.60E-05	7.81E-20	2.88E-21	0.00E+00	2.53E-03
54.	LA 140	0.00E+00	3.58E-03	3.54E-05	1.50E-19	5.17E-21	0.00E+00	3.61E-03
55.	CE 141	0.00E+00	3.38E-05	3.66E-07	9.01E-22	3.44E-23	0.00E+00	3.41E-05
56.	CE 143	0.00E+00	1.66E-04	1.31E-06	1.68E-20	5.74E-22	0.00E+00	1.68E-04
57.	CE 144	0.00E+00	9.95E-04	1.11E-05	2.40E-20	9.09E-22	0.00E+00	1.01E-03
58.	PR 143	0.00E+00	5.91E-04	6.21E-06	1.69E-20	5.76E-22	0.00E+00	5.97E-04
59.	PR 144	0.00E+00	9.95E-04	1.11E-05	2.40E-20	9.09E-22	0.00E+00	1.01E-03
60.	NP 239	0.00E+00	1.92E-04	1.61E-06	1.32E-20	4.70E-22	0.00E+00	1.94E-04
61.	C 14	1.20E+00	1.60E+00	0.00E+00	4.50E+00	0.00E+00	0.00E+00	7.30E+00

Reference 11.3.10.1
VEx ≡ Vent Exhaust
RF ≡ Refueling Floor
CTM - Containment
CVE - Condenser Vacuum Exhaust
TB - Turbine Building
WDS - Waste Disposal System

TABLE 11.3.9-1

Point of Interest Locations
at Sequoyah Nuclear Plant

	POINT	SECTOR	DISTANCE (M)
1.	Unrestricted Area Boundary	N	950.
2.	Unrestricted Area Boundary	NNE	2260.
3.	Unrestricted Area Boundary	NE	1910.
4.	Unrestricted Area Boundary	ENE	1680.
5.	Unrestricted Area Boundary	E	1570.
6.	Unrestricted Area Boundary	ESE	1460.
7.	Unrestricted Area Boundary	SE	1460.
8.	Unrestricted Area Boundary	SSE	1550.
9.	Unrestricted Area Boundary	S	1570.
10.	Unrestricted Area Boundary	SSW	1840.
11.	Unrestricted Area Boundary	SW	2470.
12.	Unrestricted Area Boundary	WSW	910.
13.	Unrestricted Area Boundary	W	670.
14.	Unrestricted Area Boundary	WNW	660.
15.	Unrestricted Area Boundary	NW	660.
16.	Unrestricted Area Boundary	NNW	730.
17.	Resident	N	1353.
18.	Resident	NNE	2400.
19.	Resident	NE	2248.
20.	Resident	ENE	2096.
21.	Resident	E	1619.
22.	Resident	ESE	1638.
23.	Resident	SE	1562.
24.	Resident	SSE	1943.
25.	Resident	S	2286.
26.	Resident	SSW	2019.
27.	Resident	SW	2972.
28.	Resident	WSW	1143.
29.	Resident	W	1010.
30.	Resident	WNW	1753.
31.	Resident	NW	1448.
32.	Resident	NNW	895.
33.	Garden	N	1829.
34.	Garden	NNE	3048.
35.	Garden	ENE	2496.
36.	Garden	ESE	1791.
37.	Garden	SE	3162.
38.	Garden	S	2362.
39.	Garden	SSW	2686.
40.	Garden	SW	3353.
41.	Garden	WSW	1524.
42.	Garden	W	1987.
43.	Garden	WNW	1867.
44.	Garden	NW	1372.
45.	Garden	NNW	991.

TABLE 11.3.9-2

Milk Animal Locations at Sequoyah Nuclear Plant

Pathway	Sector	Dist.(m)	Consumer[1]	FF[2]
Cow Milk	N	4515	A	0.12
Cow Milk	NE	8696	A	0.10
Cow Milk	WNW	2096	A	0.01
Cow Milk	NW	2134	A	0.03

[1]Consumers classified as adults (A), teens (T), children (C), or infants (I)
[2]Fraction representing the fraction of animal feed obtained from fresh forage

SQN

TABLE 11.3.9-3

PROJECTED 2010 POPULATION WITHIN 50 MILES OF THE SEQUOYAH NUCLEAR PLANT

POPULATION WITHIN EACH SECTOR ELEMENT

SECTOR MIDPOINT (MILES)

	0.8	1.5	2.5	3.5	4.5	7.5	15	25	35	45
N	20	41	213	129	66	1784	5453	3470	2610	11145
NNE	0	30	123	182	62	600	10628	4910	8250	10625
NE	0	0	67	67	94	581	2884	6998	7047	18080
ENE	0	11	24	222	300	773	4707	5747	29477	18679
E	0	70	11	191	137	918	17440	6808	5072	4129
ESE	0	118	113	194	137	1849	46521	5044	1896	13624
SE	0	179	322	168	205	1507	6005	5461	15641	3417
SSE	0	125	370	750	601	2347	13242	8596	34279	11648
S	0	67	143	229	811	3930	28008	26690	19642	11622
SSW	0	82	140	400	170	8927	96966	55597	21349	11978
SW	0	10	306	634	194	9787	94225	23455	11641	11109
WSW	20	190	642	1124	1669	19089	28405	4106	15081	9548
W	10	20	233	657	657	5225	1580	6350	5699	7707
WNW	10	30	365	598	598	2622	6540	4920	6699	2450
NW	50	80	292	569	336	2696	1410	1750	1217	15856
NNW	10	263	80	75	213	1610	471	3130	2835	5719

TABLE 11.3.9-4

SEQUOYAH NUCLEAR PLANT - INDIVIDUAL DOSES PER UNIT FROM GASEOUS EFFLUENTS

Effluent	Pathway	Guideline*	Point	Dose
Noble Gases	Air dose (Gamma)	10	Max. Exp.[1]	0.75 mrad/yr
	Air dose (Beta)	20	Max. Exp.[1]	2.17 mrad/yr
	Total body[2]	5	Residence[3]	0.52 mrem/yr
	Skin[2]	15	Residence[3]	1.42 mrem/yr
Iodines/ Particulates	Bone (critical organ)	15	Real pathway[4]	4.38 mrem/yr

Breakdown of Iodine/Particulate Exposures (mrem/yr)

	Infant	Child	Teen	Adult
Vegetable Ingestion	0.00	4.67	1.96	1.22
Beef ingestion[1]	0.00	0.89	0.47	0.56
Inhalation	0.05	0.11	0.07	0.06
Ground Contamination	0.017	0.017	0.017	0.017
Total	0.04	5.69	2.52	1.86

*The guidelines are defined by Appendix I to 10 CFR 50 (same units as Dose).
[1]Maximum exposure point is at 950 meters in the N sector.
[2]Dose from air submersion.
[3]Maximum exposure is at 2019 meters in the SSW sector.
[4]Real pathway is at 2686 meters in the SSW sector.

Reference 11.3.10.2

Table 11.3.9-5

Summation of Population Doses

TOTAL BODY POPULATION DOSE

	Infant	Child	Teen	Adult	Total
Submersion	3.22E-02	3.60E-01	3.28E-01	1.43E+00	2.15E+00
Ground Contamination	1.06E-03	1.19E-02	1.08E-02	4.71E-02	7.09E-02
Inhalation	4.79E-03	1.30E-01	8.48E-02	3.58E-01	5.78E-01
Cow Milk	8.69E-02	4.83E-01	1.88E-01	3.43E-01	1.10E+00
Beef Ingestion	0.00E+00	2.55E-01	1.30E-01	6.68E-01	1.05E+00
Vegetable Ingestion	0.00E+00	7.56E-01	3.14E-01	8.72E-01	1.94E+00
Total Man-rem	1.25E-01	2.00E+00	1.06E+00	3.71E+00	6.89E+00

MAXIMUM ORGAN (BONE) POPULATION DOSE

	Infant	Child	Teen	Adult	Total
Submersion	3.22E-02	3.60E-01	3.28E-01	1.43E+00	2.15E+00
Ground Contamination	1.06E-03	1.19E-02	1.08E-02	4.71E-02	7.09E-02
Inhalation	8.57E-03	2.17E-01	1.23E-01	4.74E-01	8.23E-01
Cow Milk	3.77E-01	2.17E+00	7.92E-01	1.35E+00	4.69E+00
Beef Ingestion	0.00E+00	1.23E+00	6.02E-01	2.97E+00	4.80E+00
Vegetable Ingestion	0.00E+00	3.36E+00	1.27E+00	3.16E+00	7.79E+00
Total Man-rem	4.19E-01	7.35E+00	3.12E+00	9.43E+00	2.03E+01

Reference 11.3.10.2

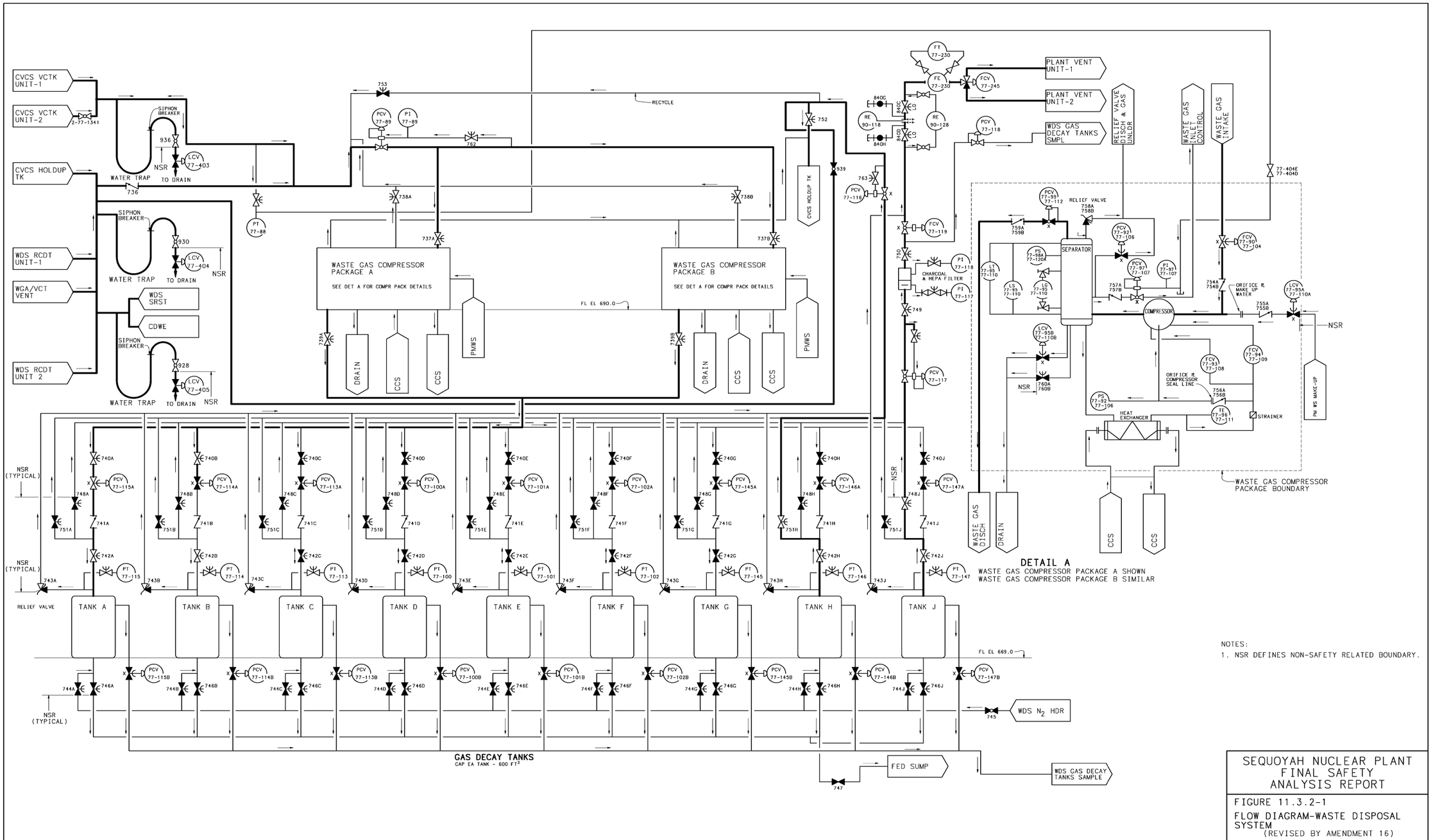

NOTES:

1. NSR DEFINES NON-SAFETY RELATED BOUNDARY.

SEQUOYAH NUCLEAR PLANT
FINAL SAFETY
ANALYSIS REPORT

FIGURE 11.3.2-1

FLOW DIAGRAM-WASTE DISPOSAL SYSTEM
(REVISED BY AMENDMENT 16)

CAD MAINTAINED DRAWING

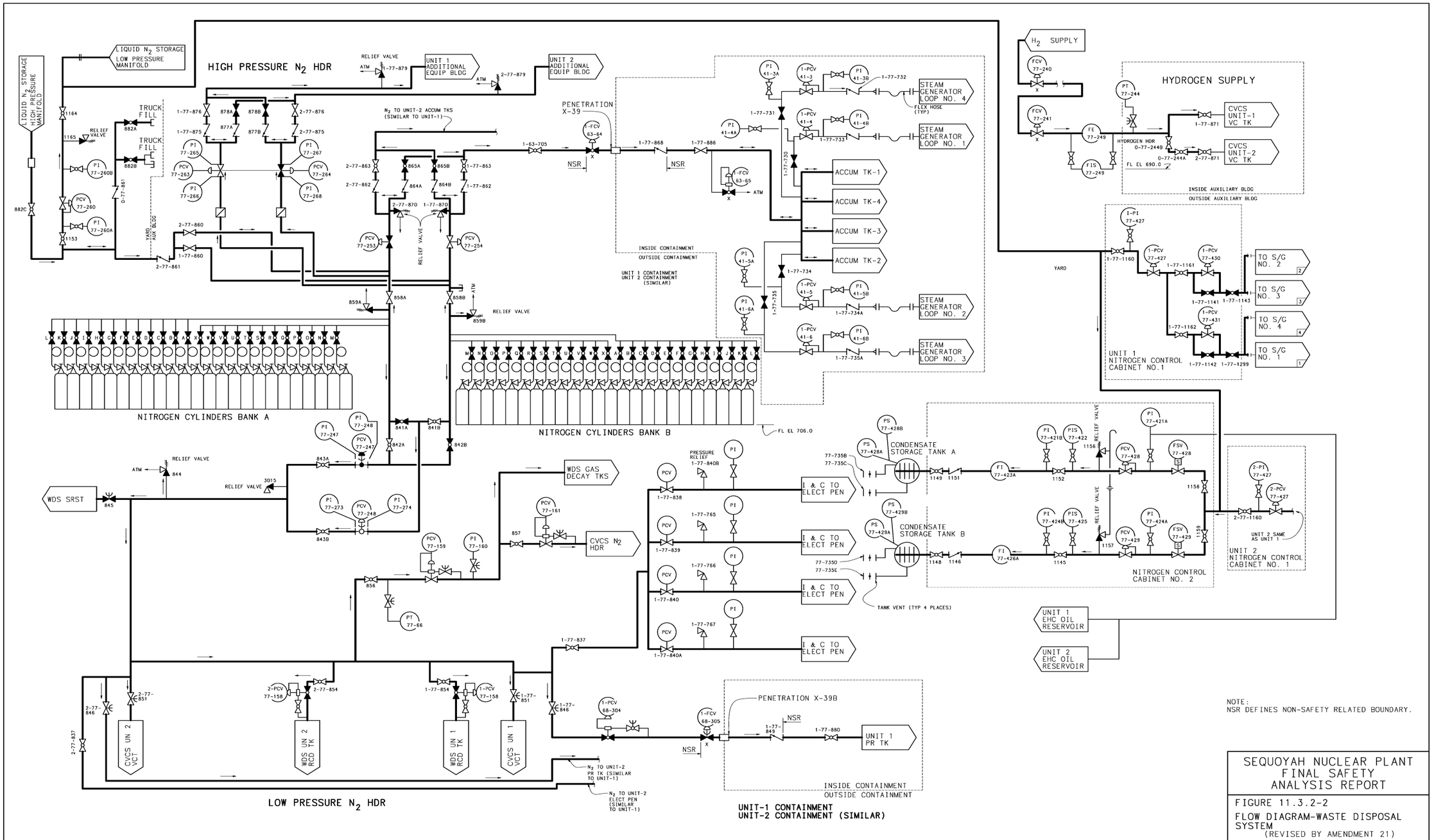

NOTE:
NSR DEFINES NON-SAFETY RELATED BOUNDARY.

SEQUOYAH NUCLEAR PLANT
FINAL SAFETY
ANALYSIS REPORT

FIGURE 11.3.2-2

FLOW DIAGRAM-WASTE DISPOSAL SYSTEM
(REVISED BY AMENDMENT 21)

CAD MAINTAINED DRAWING

11.4 PROCESS AND EFFLUENT RADIOLOGICAL MONITORING SYSTEMS

Means are provided for monitoring during normal operations, including anticipated operational occurrences, and during accident conditions various process streams and gaseous and liquid effluent discharge paths. Some of the monitors initiate automatic control actions.

11.4.1 Design Objectives

The Process and Effluent Radiological Monitoring Systems are designed to perform these basic functions:

1. Give warning of a condition which might lead to radioactivity releases that could result in exceeding the limits set forth in 10CFR20 and in 10CFR50.

2. Warn plant personnel of increasing radiation levels which might result in a radiation health hazard.

3. Rapidly provide information on fuel clad and equipment failures or malfunctions.

4. Provide means for detection of leakage of primary coolant to the secondary coolant.

5. Initiate automatic control actions to prevent the unnecessary discharge of excessive radioactivity to the environment.

6. Initiate automatic control actions to prevent the transfer to plant tanks of radioactivity in concentrations above design limits.

7. Perform primary safety functions and postaccident monitoring.

11.4.2 Continuous Monitoring

An instrumentation assembly that includes one or more radiation detectors or radioactive material sample collectors, or both, and all associated instrumentation outside the assembly constitutes a radiation monitor. Each radiation monitor described in this section is composed of one or more of the following channels:

1. gaseous effluent or gaseous process noble gas,
2. gaseous effluent particulate,
3. gaseous effluent iodine,
4. gaseous process exposure rate, and
5. liquid effluent or liquid process.

In the case of two or more monitor channels constituting a single monitor, the monitor channels are considered to share common instrumentation. For example, a three-channel monitor's sampling system is shared among the three channels. Also, part of a sampling system may be shared among two or more monitors.

Most monitor channels have several components. In this section, the unique identification of the detector of any of these monitor channels is used to designate the entire monitor channel.

For monitor channels that do not have uniquely identified components, monitor channel identification requires both the unique identification of the monitor skid assembly which houses the radioactive material sample collectors or channel detectors, or both, and a verbal description sufficient to identify the specific channel of the monitor.

The identification of a monitor channel, monitor skid, and any plant system component that is automatically actuated by a monitor channel begins with one of the character sets, 1-, 2-, or 0-, to denote unit 1, unit 2, or common, respectively. Whenever an identification in this section does not contain one of these character sets, both unit 1 and unit 2 channels, monitor skid assemblies or actuated components exist.

The liquid process and effluent monitors are listed in Table 11.4.2-1. The gaseous process and effluent monitors are listed in Table 11.4.2-2. These tables also list for each monitor channel the electrical safety class, the seismic category, the type of detector, the location of the detector assembly, and the channel range.

Provisions for indication, recording, and alarm annunciation, both locally (i.e., in the vicinity of the detector assembly) and remotely on an MCR panel, are listed in Table 11.4.2-3.

11.4.2.1 Process and Effluent Liquid Monitors

The radiation monitoring system has two basic types of process liquid monitors: (1) off-line monitors and (2) on-line monitors. Each off-line monitor extracts a portion of the process fluid to provide a sample of liquid effluent for real time detection of the effluent radioactivity. The on-line monitors provide real time detection of process liquid radioactivity by means of the detection of dose rates in the vicinity of process liquid piping.

11.4.2.1.1 Waste Disposal System Liquid Discharge Monitor (O-RE-90-122)

Instrument malfunction or detection of radioactivity in excess of the effluent concentration setpoint shall automatically initiate closure of this effluent path to the cooling tower blowdown system by closing RCV-77-43. The setpoint is predetermined by nuclear chemistry Offsite Dose Calculation Manual (ODCM) compliance sampling program prior to each effluent discharge. The sampling program is responsible for determining the acceptability of each release and adherence to 10CFR20 criteria. This monitor provides additional assurance that the effluent releases are consistent with the compliance sampling to preclude potential discharges composed of inconsistent concentrations or piping misalignment.

11.4.2.1.2 Essential Raw Cooling Water Discharge Monitors (O-RE-90-133,140) (O-RE-90-134, 141)

Two monitor channels that share a common sample delivery system are used to continuously monitor each of the two separately trained ERCW discharge headers. Channels O-RE-90-133, 140 monitor discharge header A. Channels O-RE-90-134, 141 monitor discharge header B. The entire sample flow may be routed through either detector channel or divided between each detector channel. These channels provide means for detecting tube leakage in the component cooling heat exchangers or the containment spray heat exchangers, which are served by ERCW.

Channel high radioactivity setpoints are determined in accordance with the ODCM methodology.

11.4.2.1.3 Component Cooling System (CCS) Monitor (O-RE-90-123,1 and 2-RE-90-123)

Each of three off-line channels continuously monitors a CCS line downstream of a CCS heat exchanger pair for activity levels indicative of a reactor coolant leak from either the Reactor Coolant or Residual Heat Removal Systems. On a high radioactivity alarm signal from any of the three channels, discharges from the vent line of the CCS surge tank are stopped by automatic closure of the isolation valve (FCV-70-66) in the vent line. This control action halts the introduction of radioactivity from the surge tank into the building air space. The high radioactivity setpoint is established such that counting rates above normal background will initiate the automatic control action.

11.4.2.1.4 Steam Generator Blowdown Liquid Discharge Monitors (RE-90-120, 121)

The steam generator blowdown liquid discharge monitor channels provide an additional indication to that of the condenser vacuum pump exhaust monitor of primary to secondary leakage by monitoring the steam generator secondary side liquid blowdown. Chemistry sampling is the primary means of identifying which steam generator is experiencing primary to secondary leakage.

The off-line monitor consists of two channels, identified as RE-90-120 and RE-90-121, which share a sampling subsystem. The entire sample flow may be routed through either detector channel or divided between each detector channel. The monitored blowdown discharge is the combined blowdown from the secondary side of all four steam generators. The blowdown is monitored downstream of the steam generator blowdown heat exchangers and downstream of the steam generator drain down flash tank. A sample cooler is provided to establish sample conditions that are within the instrumentation design limits.

Detection of high radioactivity by either monitor channel initiates isolation of the blowdown path to the cooling tower blowdown. Isolation is accomplished by closing valves FCV-15-8 and FCV-15-44. Monitor high radioactivity setpoints are determined in accordance with ODCM methodology.

11.4.2.1.5 Deleted

11.4.2.1.6 Deleted

11.4.2.1.7 Deleted

11.4.2.1.8 Deleted

11.4.2.1.9 Deleted

11.4.2.1.10 Deleted

11.4.2.1.11 Condensate Demineralizer Liquid Monitor (O-RE-90-225)

The condensate demineralizer liquid monitor channel continuously monitors the effluent from the neutralization tank, high crud tanks A and B or the non-reclaimable waste tank prior to discharge of these effluents to the cooling tower blowdown or turbine building sump.

At the channel high radioactivity setpoint, several automatic functions are initiated: (1) effluent lines to the cooling tower blowdown are isolated, (2) recirculation of the contents of the non-reclaimable waste tank is begun, (3) the flow path from the neutralization tank to the non-reclaimable waste tank is closed, and (4) recirculation of the contents of the neutralization tank is begun. The following specific control actions occur to accomplish these functions: (1) valve O-FCV-14-288 closes to isolate effluent from the high crud filter vessel, (2) valve O-FCV-14-360 closes to isolate effluent from the non-reclaimable waste tank, (3) valve O-FCV-14-345 opens to provide recirculation of the contents of the non-reclaimable waste tank, (4) valve O-FCV-14-187 closes to isolate the discharge line of the neutralization tank, and (5) valve O-FCV-14-188 opens to provide recirculation of the contents of the neutralization tank.

The channel high radioactivity setpoint is determined in accordance with the ODCM methodology.

11.4.2.1.12 Station (Turbine Building) Sump Discharge Monitor (O-RE-90-212)

The station sump discharge monitor is an on-line (in close proximity to discharge pipe) channel that monitors the discharge flow from the station sump, located in the Turbine Building, to the yard discharge culvert.

The monitor high radioactivity setpoint is determined in accordance with the ODCM methodology.

11.4.2.2 Process and Effluent Gas Monitors

Three types of effluent gas monitor channels exist in the radiation monitoring system: (1) off-line monitor channels, (2) on-line monitor channels, and (3) an in-line monitor channel.

Off-line channels employ a sampling system, which may be shared, to provide a continuous sample of gaseous effluent for one of five purposes: (1) real-time detection of noble gases or gross radioactivity, (2) collection of particulates on a filter for subsequent laboratory analysis, (3) collection of iodine on an adsorber for subsequent laboratory analysis, (4) collection of particulates for real-time detection of particulate radioactivity, and (5) collection of iodine for real-time detection of iodine radioactivity.

Channels that provide detection of gross radioactivity are called noble gas channels since contributions from other nuclides to the measured gross radioactivity are negligible.

On-line effluent gas monitor channels provide real time detection of effluent noble gas radioactivity by means of the detection of dose rates in the vicinity of the effluent pipe or duct.

An in-line gas monitor channel has its scintillation detector in line with the gas decay tank release piping.

The radiation monitoring system employs three types of process gas monitor channels: (1) in-line monitor channel, (2) off-line monitor channels, and (3) area-type monitors. Each off-line channel employs a sampling system to provide a continuous sample of process gas for real-time detection of noble gas radioactivity. Two area-type monitors that are employed in the system to monitor the fuel pool air space are arbitrarily categorized as process gas monitors since the dose rates that they would measure during a fuel handling accident would be predominantly from noble gas radioactivity.

11.4.2.2.1 Waste Gas Effluent Monitors (O-RE-90-118)

The in-line noble gas channel, O-RE-90-118, continuously monitors the gaseous release from the waste gas decay tanks to the Shield Building vent and initiates isolation of the gas decay tanks by closing valve O-FCV-77-119 on a high radioactivity or instrument malfunction signal.

Gas decay tanks are sampled and analyzed for radioactivity concentrations prior to release. The monitor high radioactivity setpoint for channel O-RE-90-118 is determined in accordance with the ODCM methodology.

11.4.2.2.2 Condenser Vacuum Pump Exhaust Monitors (RE-90-119, 99, 255, 256)

Two low range monitors, RE-90-99 and RE-90-119, and two accident monitors (mid & high range), RE-90-255 & 256, provide detection of noble gases over the entire range of concentrations that could exist during normal operations and during accident conditions. Monitor channel ranges overlap. RE-90-99 or -119 continuously samples the condenser vacuum pump exhaust to monitor noble gas concentrations for indications of primary to secondary leakage and for evaluations of radioactivity released to the environment. The RE-90-99 and -119 monitors cover the same range of concentrations and only one of the two should be sampling the exhaust at a time. The other monitor is a spare/backup monitor to be used during failures or maintenance periods. Both monitors should not be in service at the same time due to flow limitations on the condenser vacuum pump exhaust.

The accident range area type monitor channels RE-90-255, 256 monitor noble gas concentrations over the upper several decades of the design range. These monitor channels, which have overlapping ranges, monitor effluent radioactivity concentrations by detection of dose rates in the vicinity of the condenser vacuum pump exhaust duct.

Each low range channel utilizes a single beta scintillation detector. The mid and high range noble gas area monitor, utilize a G-M tube (255) and ion chamber (256).

Portable samplers can be utilized for laboratory analyses of particulate and iodine radioactivity as required.

Samples for RE-90-99 and RE-90-119 (low range) condenser vacuum pump exhaust monitor channels are obtained with cylindrical sampling manifolds that extend completely across the 12-inch diameter exhaust duct. The sample enters the manifold through four upstream facing openings that are uniformly spaced along the cylindrical surface of the manifold.

The setpoint for the low range monitor channels RE-90-99 and RE-90-119, is established in accordance with the ODCM methodology.

11.4.2.2.3 Fuel Pool Air Space Monitors (O-RE-90-102, 103)

The fuel pool air space channels continuously monitor the air space above the fuel pool. G-M tube detectors are mounted above the fuel pool. A high radioactivity signal initiates Auxiliary Building isolation and startup of the Auxiliary Building Gas Treatment System (ABGTS). These actions would prevent the release to the environment of unfiltered air containing radioactivity from a fuel-handling accident in the Auxiliary Building. The two fuel pool monitors are powered from separate power supplies. Dose rates from a spent fuel assembly in motion will not exceed 2.5 mrem/hr at the detector locations. The setpoint upper value as defined in the Technical Specification allows an ample factor for contributions to the total dose rate from other sources in the spent fuel pit area and takes into account instrument accuracy. These monitors are safety related.

11.4.2.2.4 Building Ventilation Monitors

Containment Building Upper and Lower Compartment Monitors

The containment building upper and lower compartment monitors are principally airborne radioactivity monitors and are therefore described in Section 12.2.4.

Shield Building Vent Monitors

The shield building vent effluents are monitored for particulates, iodine, and noble gases. A primary sample stream for shield building exhaust monitoring originates with a sampling probe assembly fitted into the vent stack with eighteen sample nozzles. The nozzles are provided for taking a representative sample of the stack effluent. See References 11.4.5.1 and 11.4.5.2.

The velocity of the air in the nozzles is automatically controlled over shield building vent flow rates from 7000 SCFM to 14000 SCFM. At flow rates other than this, the sample rate is constant. Automatic flow control is achieved by a stack effluent flow monitoring system. The flow monitoring system is comprised of flow elements and signal processing equipment. A flow element is located in the ABGTS, EGTS, and each of the containment purge exhaust ducts. The outputs of the flow elements are summed to provide total stack flow. Stack total flow and EGTS flow are indicated in the Main Control Room. Total stack flow and ABGTS flow are input to the plant computer system. The flow monitoring system also provides input to RM-90-400 for calculation of radioactive noble gas effluent discharge rate, which is indicated in the main control room and available for trending in the Integrated Computer System.

From the primary sample stream, two secondary streams are drawn: a high flow secondary stream for low range radiation sampling and detection, and a low flow secondary

stream for mid and high range radiation sampling and detection. Both secondary sample streams flow through a sample conditioning skid, RE-90-402. Depending on the radioactivity of the sample, secondary sample may flow through only the low, or through both the low and mid/high, or through only the mid/high range radiation secondary sample streams. The sample conditioning skid filters iodine and particulates from the streams and is the means for normal and accident particulate-iodine sampling. In addition, remotely timed particulate and iodine grab samples can be drawn from RE-90-402 for onsite laboratory analysis.

The filtered secondary streams flow to the radiation detector skid, RE-90-400. The detector skid provides continuous detection of noble gases. The low radiation range stream is monitored by a shielded offline beta detector assembly. The mid and high radiation range stream is monitored by a dual-range beta-gamma sensitive gas detector assembly consisting of two sample chambers, with solid-state CdTe(CI) detectors encased in six inch thick lead background shielding. These detectors are connected directly to individual charge-sensitive preamplifiers. Sample concentrations are indicated and available to be trended in the main control room.

Accident range monitor channels, RE-90-260 and RE-90-261, provide additional capability for monitoring noble gas concentrations over the upper several decades of the design range. These off-line monitor channels, which have overlapping ranges, monitor effluent radioactivity concentrations by detection of exposure rates in the vicinity of the primary sample line. Channel RE-90-260 uses a G-M tube to monitor the lower end of the range; channel RE-90-261 uses an ion chamber to monitor the upper end of the range.

After being monitored, the primary and secondary sample flow streams are routed back to the ABGTS discharge duct for discharge through the shield building vent.

Effluent setpoints are established in accordance with the ODCM methodology.

Auxiliary Building Vent Monitor

The Auxiliary Building vent is monitored for noble gases by channel 0-RE-90-101B. Particulate radioactivity and radioiodine is collected with a removable filter and analyzed remotely.

Noble gas detection by channel 0-RE-90-101B is accomplished with a beta scintillation detector.

The sample for monitoring is originated with a sampling probe assembly fitted with seventy-two sample nozzles. The nozzles are provided for taking a representative sample of the duct effluent. Since the sample taken from the duct is too large to be routed directly to the particulate and iodine filters, a subsample is taken from the main sample line for monitoring. See References 11.4.5.1 and 11.4.5.2.

The noble gas channel automatically initiates auxiliary building vent isolation and startup of the Auxiliary Building gas treatment system (ABGTS) at the high radioactivity setpoint. The noble gas channel setpoint is determined in accordance with the ODCM. The automatic initiation of control actions by this monitor channel is not a primary safety function; rather, it is provided for ALARA off-site dose purposes.

A Class 1E isolation device between the nonsafety-related circuit and the safety-related Auxiliary Building isolation circuit is provided.

Service Building Vent Monitor

The Service Building vent monitor has channel 0-RE-90-132B to monitor noble gas.

The sample for monitoring is originated with a sampling probe assembly fitted with eight sample nozzles. The nozzles are geometrically arranged to allow taking a representative sample of the duct effluent.

The assembly for 0-RE-90-132B is identical to that for the Auxiliary Building vent channel 0-RE-90-101B.

Channel setpoints are established in accordance with ODCM methodology.

11.4.2.2.5 MCR Normal Intake and Emergency Intake Monitors

Two pairs of monitors are provided to monitor the intake for the MCR. These monitors are an integral part of the design provision for complying with GDC 19. When the MCR ventilation system is operating in the normal mode, the intake air is monitored by the redundant monitors, 0-RE-90-125 and 0-RE-90-126. In the event of high radioactivity level in the intake air, these monitors initiate the emergency mode of operation of the ventilation system. It is possible in the emergency mode to manually switch to a different air intake which is in a location removed from the normal air intake. This is identified as the emergency air intake path and is monitored by the redundant monitors, 0-RE-90-205 and 0-RE-90-206.

Each MCR intake monitor assembly includes a sample pump and a beta scintillation detector. 0-RE-90-125 and 0-RE-90-205 are supplied with train A power while the other two monitors are supplied with train B power.

11.4.2.2.6 Containment Building Purge Exhaust Monitors

The redundant containment building purge air exhaust monitors are identified as RE-90-130 and RE-90-131. Each monitor is supplied with trained power, with RE-90-130 on train A and RE-90-131 on train B. Each monitor assembly includes a sample pump and beta scintillation detector.

The sample for each monitor is taken from one of the containment purge exhaust ducts upstream of the HEPA filter-charcoal absorber filter train.

A high radioactivity signal in either channel initiates containment ventilation isolation. This control action is a safety function. The action prevents the release to the atmosphere of unacceptable quantities of radioactivity should the following set of conditions occur: (1) operation with reactor coolant activity within technical specification limits but unusually high, (2) occurrence of a small LOCA during containment purging, (3) delay caused by pressure relief through the purge exhaust in containment pressure's reaching the setpoint for a containment isolation signal. A containment vent isolation is also identified for a fuel handling accident as discussed in Section 15.5.6.

11.4.2.2.7 Main Steam Line Monitors

The main steam line radiation monitors (RE-90-421, 422, 423, and 424) consist of one monitor per steam line. The detectors are located inside the main steam valve vaults upstream of the branch lines to the relief valve headers. Each main steam line monitor consists of one ion chamber detector, a signal processor, and remote control/display unit and associated hardware. The radiation monitors have area type detectors which are located in the immediate area of the main steam piping. These detectors do not penetrate the main steam pressure boundary. All four monitors provide output to a control room recorder.

The monitors serve as Post Accident Monitors (indication and recording) of steam line specific radioactivity. These measurements can be utilized to determine release rates to the atmosphere. Additionally, the monitors are useful in the identification of the steam generator where a very high primary to secondary coolant leak is occurring.

11.4.3 Sampling

The release points are subject to periodic sampling and are all liquid and gaseous releases which could exceed Appendix I, 10 CFR 50 and 10 CFR 20 limits. The sampling and analysis requirements for these release points are defined in the SQN ODCM controls. The plant discharge meets Regulatory Guide 1.21 Revision 1, 10 CFR 20, and 10 CFR 50 guidelines.

11.4.4 Calibration and Maintenance

Channel checks, channel calibrations, channel operational tests, and channel functional tests are procedurally performed as required by Technical Specifications, ODCM, and plant procedures as appropriate.

Maintenance will be performed if abnormalities are detected during any of the above checks. Unscheduled maintenance will be performed as required.

11.4.5 References

11.4.5.1 ANSI N13.1-1969, Guide to Sampling Airborne Radioactive Materials in Nuclear Facilities.

11.4.5.2 ANSI N13.1-1999, Sampling and Monitoring Releases of Airborne Radioactive Substances From Stacks and Ducts of Nuclear Facilities.

TABLE 11.4.2-1 (Sheet 1) [7]

PROCESS AND EFFLUENT RADIATION MONITORS - LIQUID MEDIA

Monitor	TVA Instrument No.	Quantity of Monitor Channels	Seismic Class	Electrical Safety Class	Detector Location Fl. Elev.	Building	Detector Type	Amb Background[1] mrem/hr.	Nuclide	Range[1] [6] Min. Det. Conc. µCi/cc	Range[1] [6] Max. Det. Conc. µCi/cc
Station Sump Disch Monitor	0-RE-90-212	1/plant	None	None	662.5	Turbine	Gamma Scint.	1.0	Co-60 Cs-137 I-131	7.38(-8) 2.49(-7) 3.15(-7)	3.26(-2) 1.06(-1) 1.39(-1)
Waste Disposal System Discharge Monitor	0-RE-90-122	1/plant	1(L)	None	669	Auxiliary	Gamma Scint.	1.0	Co-60 Cs-137 I-131	1.9(-5) 3.5(-5) 4.23(-6)	4.20(-2) 7.80(-2) 2.38(-2)
Essential Raw Cooling Water Discharge Monitor	0-RE-90-133 0-RE-90-134 0-RE-90-140 0-RE-90-141	4/plant (2 channels per monitor)	1(L)	None	669	Auxiliary	Gamma Scint.	1.0	Co-60 Cs-137 I-131	2.75(-6) 5.07(-6) 4.23(-6)	1.55(-2) 2.85(-2) 2.38(-2)
Condensate Deminer. Liquid Monitor	0-RE-90-225	1/plant	None	None	685	Demin	Gamma Scint.	1.0	Co-60 Cs-137 I-131	6.37(-8) 1.17(-7) 9.78(-8)	1.55(-2) 2.84(-2) 2.38(-2)
Steam Generator Blwdn Liquid Discharge Monitor	1-RE-90-120 2-RE-90-120 1-RE-90-121 2-RE-90-121	4/plant (2 channels per monitor)	None	None	685	Turbine	Gamma Scint.	1.0	Co-60 Cs-137 I-131	2.75(-6) 5.07(-6) 4.23(-6)	1.55(-2) 2.85(-2) 2.38(-2)

TABLE 11.4.2-1 (Sheet 2) [7]

PROCESS AND EFFLUENT RADIATION MONITORS - LIQUID MEDIA

Monitor	TVA Instrument No.	Quantity of Monitor Channels	Seismic Class	Electrical Safety Class	Detector Location Fl. Elev.	Building	Detector Type	Amb Background[1] mrem/hr.	Nuclide	Range[1] [6] Min. Det. Conc. µCi/cc	Range[1] [6] Max. Det. Conc. µCi/cc
Component Cooling Sys Monitor	0-RE-90-123	3/plant	1(L)	None	714	Auxiliary	Gamma Scint.	1.0	Co-60	2.75(-6)	1.55(-2)
	1-RE-90-123								CS-137	5.07(-6)	2.84(-2)
	2-RE-90-123								I-131	4.23(-6)	2.38(-2)

(1) The minimum detectable concentration is determined at the above background. The actual demonstrated range encompasses the minimum and maximum detectable concentration values shown in Table.

(6) These values are based on prototype calibration factors from the manufactures and not the installed detector. The installed detector will vary from these values due to individual detector sensitivities however, they are in compliance with the TVA required tolerances.

(7) Accuracy analysis performed by NE calculation SQN-APS3-100.

TABLE 11.4.2-2 (Sheet 1) [16]

PROCESS AND EFFLUENT RADIATION - GASEOUS MEDIA

Monitor	TVA Instrument No.	Quantity of Monitor Channels	Seismic Class	Electrical Safety Class	Detector Location Fl. Elev.	Building	Detector Type	Amb Background[1] mrem/hr.	Nuclide	Range[1] [17] Min. Det. Conc. µCi/cc	Range[1] [17] Max. Det. Conc. µCi/cc
Condenser Vacuum Pump Exhaust Low Range Noble Gas Monitor	1-RE-90-119 2-RE-90-119 1-RE-90-99 2-RE-90-99	4/plant	None	(2)	732	Turbine	Beta Scint.	1.0	Total Gas	6.8(-7)	2.7(-1)
Condenser Vacuum Pump Exhaust Accident Mid/High Range Noble Gas Monitor	1-RE-90-255,256* 2-RE-90-255,256*	4/plant	None	None	732	Turbine	GM Tube & Ion Chamber	(10)	-	4.28(-2) 4.28(-2)	5.18(+5)* 5.62(+5)*
Shield Building Vent Accident Range Noble Gas	1-RE-90-260,261* 2-RE-90-260,261*	4/plant	1(L)	None	734	Auxiliary	GM Tubes & Ion Chamber	(11)	- -	9.63(+1) 9.4(+1)	1.92(+6)* 1.3(+6)*
Shield Building Vent Normal/Accident Range Noble Gas	1-RE-90-400 2-RE-90-400	6/plant (3 channels per Monitor)	1(L)	(2)	706	Radiation Monitoring Bldg	Beta Scint. Solid State	(14) (15)	Xe-133	9.19(-8)	7.69(+4)

* Entire range for both detectors.

TABLE 11.4.2-2 (Sheet 2) [16]

PROCESS AND EFFLUENT RADIATION - GASEOUS MEDIA

Monitor	TVA Instrument No.	Quantity of Monitor Channels	Seismic Class	Electrical Safety Class	Detector Location Fl. Elev.	Building	Detector Type	Amb Background[1] mrem/hr.	Nuclide	Range[1] [17] Min. Det. Conc. µCi/cc	Range[1] [17] Max. Det. Conc. µCi/cc
Shield Building Vent Normal/Accident Range Part & Iodine Sampler	1-RE-90-402 2-RE-90-402	2/plant	1(L)	(2)	706 Bldg	Radiation Monitoring	N/A	N/A	N/A	N/A	N/A
Auxiliary Building Vent Monitor	0-RE-90-101B	1/plant (1 channel per monitor)	1(L)	(2)	763	Auxiliary	Beta Scint(9)	1.0	Kr-85	3.93(-7)	1.59(-1)
Service Building Vent Monitor	0-RE-90-132B	1/plant (1 channel per monitor)	None	None	718	Service	Beta Scint(9)	1.0	Kr-85	3.93(-7)	1.59(-1)
Containment Building Purge Exhaust	1-RE-90-130 1-RE-90-131 2-RE-90-130 2-RE-90-131	4/plant	1	1E	690	Auxiliary	Beta Scint	10.0	Xe-133	1.19(-5)	1.0(+1)
Waste Gas Effluent Noble Gas	0-RE-90-118	1/plant	1(L)	None	689	Auxiliary	Beta Scint.	1.0	Xe-133	4.74(-4)	3.51(+2)
Main Control Room Air Intake Monitors	0-RE-90-125 0-RE-90-126 0-RE-90-205 0-RE-90-206	4/plant	1	1E	732	Control	Beta Scint.	1.0	Xe-133	5.4(-7)	4.4(-1)
Fuel Pool Air Space	0-RE-90-102 0-RE-90-103	2/plant	1	1E	734	Auxiliary	GM Tube	10.0	-	1.0(-1)[12]	1.0(+4)[12]
Main Steam Lines	1-RE-90-421 1-RE-90-422 1-RE-90-423 1-RE-90-424 2-RE-90-421 2-RE-90-422 2-RE-90-423 2-RE-90-424	8/plant	1(L)	(2)	706	Auxiliary (MSVV)	ION Chamber	**	**	**	**

TABLE 11.4.2-2 (Sheet 3) [16]

PROCESS AND EFFLUENT RADIATION - GASEOUS MEDIA

Monitor	TVA Instrument No.	Quantity of Monitor Channels	Seismic Class	Electrical Safety Class	Detector Location Fl. Elev.	Building	Detector Type	Amb Background[1] mrem/hr.	Nuclide	Range[1] [17] Min. Det. Conc. µCi/cc	Range[1] [17] Max. Det. Conc. µCi/cc

(1) This minimum detectable concentration is determined at the above background. The actual demonstrated range encompasses the minimum and maximum detectable concentration values shown in Table.
(2) Electrical safety class consistent with Category 2 of NRC Regulatory Guide 1.97 Revision 2.
(3) Deleted by Amendment 13.
(4) Deleted by Amendment 16.
(5) Deleted by Amendment 9
(6) Deleted by Amendment 9
(7) Deleted by Amendment 16.
(8) Deleted by Amendment 16.
(9) Noble gas channel
(10) 1.0 mrem/hr from process activity is assumed to be detectable in the presence of the existing ambient background
(11) 10 mrem/hr from process activity is assumed to be detectable in the presence of the existing ambient background
(12) mrem/hr
(13) Deleted by Amendment 16.
(14) Noble gas - normal range: 1 mr/hr
(15) Noble gas - accident range: 29 mr/hr
(16) Accuracy analysis performed by NE calculations SQN-APS3-100 and SQN-SQS2-103
(17) These values are based on prototype calibration factors from the manufacturers and not the installed detector. The installed detector will vary from these values due to individual detector sensitivities however, they are in compliance with the TVA required tolerances.

** See SQS2-0103, these values vary with respect to time normal operations and for the SGTR event.

TABLE 11.4.2-3 (Sheet 1)

PROCESS AND EFFLUENT RADIATION MONITOR DISPLAYS

Monitor or Monitor Channel	Identification (1)	Local Ind	Local Rec	Local Ann Hi Rad	MCR Ind	MCR Rec	MCR Hi Rad Ann	MCR Inst Malf Ann	Integrated Computer System	Comments Note 5 and 6
1. Gaseous Effluent Monitors										
a. Condenser Vacuum Pump Exhaust										
(1) Low Range	1&2-RE-90-99, 119	-	-	-	M-12	M-12	M-12	M-12	(7)	
(2) Mid/High	1&2-RE-90-255,256	X	-	X	M-30	M-31	M-30	M-30	(7)	
b. Shield Building Vent										
(1) Normal/Accident; Noble Gas	1&2-RE-90-400	-	-	-	M-30	-	M-30	M-30	(8)	Release rate only entered In computer system
(2) Normal/Accident; Particulate Iodine Samplers	1&2-RE-90-402	N/A	N/A	N/A	N/A	N/A	N/A	N/A	N/A	No real time detection
(3) Accident Range	1&2-RE-90-260,261	X	-	X	M-30	M-31	M-30	M-30	(7)	Two monitor channels with overlapping ranges
c. Auxiliary Building Vent										
Noble Gas	0-RE-90-101B	-	-	-	M-12	M-12	M-12	M-12	(8)	

TABLE 11.4.2-3 (Sheet 2)

PROCESS AND EFFLUENT RADIATION MONITOR DISPLAYS

Monitor or Monitor Channel	Identification	Local Ind	Local Rec	Local Ann Hi Rad	MCR Ind	MCR Rec	MCR Hi Rad Ann	MCR Inst Malf Ann	Integrated Computer System	Comments Note 5 and 6
d. Service Building Vent										
Noble Gas	0-RE-90-132B	-	-	-	M-12	M-12	M-12	M-12	(8)	
e. Containment Building Purge Exhaust										
(1) One of two independent channels	1&2-RE-90-130	X	-	-	-	-	M-12	M-12	(7)	Train A Vital Power
(2) One of two independent channels	1&2-RE-90-131	X	-	-	-	-	M-12	M-12	(7)	Train B Vital Power
f. Waste Gas Effluent										
(1) Noble Gas	0-RE-90-118	X	-	X	M-12	-	M-12	M-12	(8)	
g. Main Steam Line										
(1) All Loops	1&2RE-90-421,422, 423,424	X	-	X	M-30	M-31	M-30	M-30	(7)	
(2) One of two independent noble gas channels	0-RE-90-126	X	-	-	-	-	M-12	M-12	(8)	Train B Vital Power

TABLE 11.4.2-3 (Sheet 3)

PROCESS AND EFFLUENT RADIATION MONITOR DISPLAYS

Monitor or Monitor Channel	Identification	Local Ind	Local Rec	Local Ann Hi Rad	MCR Ind	MCR Rec	MCR Hi Rad Ann	MCR Inst Malf Ann	Integrated Computer System	Comments Note 5 and 6
2. Gaseous Process Monitors Main Control Room (MCR)										
a. Normal Intake										
(1) One of two independent noble gas channels	0-RE-90-125	X	-	-	-	-	M-12	M-12	(8)	Train A Vital Power
b. Emergency Intake										
(1) One of two independent noble gas channels	0-RE-90-205	X	-	-	-	-	M-12	M-12	(8)	Train A Vital Power
(2) One of two independent noble gas channels	0-RE-90-206	X	-	-	-	-	M-12	M-12	(8)	Train B Vital Power
c. Fuel Pool Air Space										
(1) One of two independent exposure rate channels	0-RE-90-102	-	-	-	M-12	-	M-12	M-12	(8)	Train A Vital Power
(2) One of two independent exposure rate channels	0-RE-90-103	-	-	-	M-12	-	M-12	M-12	(8)	Train B Vital Power
3. Liquid Effluent Monitors										
a. Deleted by Amendment 10										
b. Station Sump Discharge	0-RE-90-212	X	-	-	-	-	M-12	M-12	(8)	

TABLE 11.4.2-3 (Sheet 4)

PROCESS AND EFFLUENT RADIATION MONITOR DISPLAYS

Monitor or Monitor Channel	Identification	Local Ind	Local Rec	Local Ann Hi Rad	MCR Ind	MCR Rec	MCR Hi Rad Ann	MCR Inst Malf Ann	Integrated Computer System	Comments Note 5 and 6
c. Waste Disposal System Discharge	0-RE-90-122	X	-	X	M-12	-	M-12	M-12	(8)	
d. Condensate Demineralizer Liquid Monitor	0-RE-90-225	-	-	-	M-12	-	M-12	M-12	(8)	
e. Steam Generator Blowdown Liquid Discharge Monitor										
(1) One of two channels that employ a common sampling system	1&2-RE-90-120	-	-	-	M-12	M-12	M-12	M-12	(7)	
(2) One of two channels that employ a common sampling system	1&2-RE-90-121	-	-	-	M-12	M-12	M-12	M-12	(7)	
f. Essential Raw Cooling Water (ERCW) Discharge										
(1) Discharge Header A										
(a) One of two channels that employ a common sampling system	0-RE-90-133	-	-	-	M-12	-	M-12	M-12	(8)	
(b) One of two channels that employ a common sampling system	0-RE-90-140	-	-	-	M-12	-	M-12	M-12	(8)	

TABLE 11.4.2-3 (Sheet 5)

PROCESS AND EFFLUENT RADIATION MONITOR DISPLAYS

Monitor or Monitor Channel	Identification	Local Ind	Local Rec	Local Ann Hi Rad	MCR Ind	MCR Rec	MCR Hi Rad Ann	MCR Inst Malf Ann	Integrated Computer System	Comments Note 5 and 6
(2) Discharge Header B										
(a) One of two channels that employ a common sampling system	0-RE-90-134	-	-	-	M-12	-	M-12	M-12	(8)	
(b) One of two channels that employ a common sampling system	0-RE-90-141	-	-	-	M-12	-	M-12	M-12	(8)	
4. Liquid Process Monitors										
Component Cooling System										
(1) Unit 1	1-RE-90-123	-	-	-	M-12	-	M-12	M-12	(7)	
(2) Common	0-RE-90-123	-	-	-	M-12	-	M-12	M-12	(8)	
(3) Unit 2	2-RE-90-123	-	-	-	M-12	M-12	M-12	M-12	(7)	

TABLE 11.4.2-3 (Sheet 6)

PROCESS AND EFFLUENT RADIATION MONITOR DISPLAYS

NOTES FOR TABLE 11.4.2-3

(1) Monitor assembly or channel identifications beginning with the numerals 1, 2, and 0 are for unit 1, unit 2, and common to units 1 and 2, respectively

(2) - denotes that display is not provided.

(3) X denotes that display is provided.

(4) N/A denotes "not applicable."

(5) If vital power is not indicated in this column, power supply is nondivisional (ND).

(6) Panel M-12 is a common panel for unit 1 and 2 components (i.e., 0-M-12).

(7) Unit 1 and Unit 2 channel are entered in their respective Integrated Computer System (ICS) computers.

(8) Entered in both Unit 1 and Unit 2 ICS computers.

11.5 SOLID WASTE MANAGEMENT SYSTEM

11.5.1 Design Objectives

The slurries and solid radwaste[1] produced by Sequoyah Nuclear Plant units 1 and 2 are prepared for shipment or for temporary onsite storage in compliance with the requirements in 10 CFR 61, 10 CFR 71, and 49 CFR 170 through 178. Solid wastes will be processed by the Solid Waste System (SWS).

---

(1) Include resin waste and evaporator concentrates

11.5.2 System Inputs

Waste inputs are divided into two categories: (1) Dry Active Waste (DAW) and (2) Wet Active Waste (WAW). DAW and WAW inputs are products of the plant operation and maintenance. Dry Active Wastes are further subdivided into compactible and noncompactible wastes. Solid compactible wastes include paper, clothing, rags, mop heads, rubber boots, and plastic. Noncompactible wastes include tools, mop handles, lumber, glassware, pumps, motors, valves, and piping.

The wet active wastes are primarily composed of spent resins. The sources for spent resins are spent resin storage tank and the radwaste demineralizer.

A list of inputs and maximum expected yearly volumes of solid wastes are provided in Table 11.5.2-1.

11.5.3 Systems Description

11.5.3.1 Wet Active Waste Processing

Bulk Resin Processing

When sufficient spent resin is accumulated in the spent resin storage tank, the appropriate valves necessary to transfer spent resin to the liner filling area in the railroad access bay are opened except for the liner fill valves. The spent resin tank is then pressurized with N_2. The liner filling valves are then opened and the resin is forced into the liner. Primary water used in the transfer is removed from the liner by a dewatering pump to the liquid waste system. The level in the liner is monitored so that the resin flow can be stopped when the desired level is reached. During transfer, N_2 is forced through the spargers in the tank to slurry and level the resin and maintain tank pressure. When the liner is full the liner filling valves are closed and tank pressure is relieved to the plant waste gas system. The filling valves and the transfer line are then flushed by pumping primary makeup water through the transfer route to both the liner and the tank. Loading is accomplished with the casks mounted on a truck or trailer bed. The truck or trailer is located in the Auxiliary Building railroad bay. The cask with disposable liner is filled from the spent resin tank. The spent resins are dewatered to meet the free-standing water limitations at licensed disposal facilities. Flush connections are provided from the PMW System to flush the resin slurry lines. In the event that the container were to overflow during the filling process, the

initial overflow would be contained in the volume between the cask and liner. In certain cases spent resins will be stabilized (possibly packaged in a high integrity container (HIC) or solidified). Solidification is carried out with an offsite vendor supplied mobile solidification system. A process control program is utilized to conduct the solidification.

The shipping container consists of an inner disposable liner with an outer reusable shield cask. Filter elements are mounted inside the liner and are connected to a hose connection outside the shield to facilitate dewatering operations. The container also has fill and vent connections.

Several types of shipping casks may be used. All casks have been licensed pursuant to the general license provisions of paragraph 71.12(b) of 10 CFR Part 71.

Radwaste Demineralizer Resin Processing

Spent resins from the Radwaste Demineralizer System are sluiced to a transportable liner or HIC inside a shipping container within the Auxiliary Building railroad bay area and dewatered to meet the disposal facilities' free-standing water limitations. The dewatered resins and disposable liners are prepared for shipment or temporary onsite storage.

Condensate Polishing Regeneration Resin Processing

Spent resins from the Condensate Polishing System are transferred directly to a disposal liner (radwaste) or suitable container (non-radwaste) from the resin storage tank. The disposal liner or container is located adjacent to the Condensate Polishing System building. After transfer of the resins is complete, the liner or container is dewatered and prepared for shipment or temporary on-site storage.

11.5.3.2 Dry Active Waste Processing

The waste packaging area is provided for receiving, sorting, and compacting DAW. Bagged and/or boxed DAW collected throughout the plant is brought to the waste packaging area for final packaging into 55-gallon drums or metal boxes. Collected waste may also be sent to a contracted broker/processor for processing, packaging, and/or subsequent disposal.

Compactible DAW Processing

Compactible trash like paper, clothing, rags, plastic, etc., are collected and compacted or maybe transported to a contracted broker/processor for processing, packaging, and/or subsequent disposal. See section 11.5.4.1 for detailed onsite compactor operation.

Noncompactible DAW Processing

Items such as tools, mop handles, valves, motors, piping, lumber and some compactibles are packaged, sealed, and stored until shipped for offsite disposal. Collected waste may also be sent to a contracted broker/processor for processing, packaging, and/or subsequent disposal.

11.5.3.3 Miscellaneous Waste Handling

Air and gas filter and prefilter elements and glassware are packaged, sealed, and stored until shipped for offsite disposal or may be transported to a contracted broker/processor for

processing, packaging, and/or subsequent disposal. Active waste filters are packaged when necessary in high integrity containers.

If the radiation levels of containers are high enough to require shielding, the containers are transported in shielded truck trailers or casks similar to those used to transport liners containing bulk quantities of dewatered resins.

11.5.4 Equipment Operation

11.5.4.1 Compactor Operation

The onsite compactor is used to compress low-level radioactive wastes into drums. Solid wastes are inserted in the open drum, the drum placed in the compactor, and the shroud door closed. The drum is automatically positioned to be coaxial with the compactor ram. An operator initiates the compaction process by pressing the cycle button. The ram will lower, hold upon reaching the rated hydraulic supply pressure, and return to the raised position. The shroud door is opened, the drum is removed and additional wastes are added to the drum. The cycle is repeated until the drum is full, at which time the lid is installed, the clamping ring tightened, and the drum stored pending shipment.

The shroud is ducted to a HEPA filter system in order to remove dust or particulates that may be emitted from the drum during compression of the wastes.

11.5.4.2 Mobile Solidification System (MSS)

The MSS is a portable solidification unit provided under a vendor service contract. The MSS combines and mixes radioactive wastes (concentrates and liquid wastes) with solidification agents and needed additives to solidify the waste. The solidification is done in accordance with a Process Control Program to ensure that each batch of waste is properly solidified. Only solidification agents (such as cement) which have been approved by licensed disposal facilities are used. The waste is solidified in a disposable liner and prepared for shipment or temporary onsite storage. The disposable liners are equipped with internal mixers to provide uniform mixing. The mobile solidification system is located in the Auxiliary Building railroad bay area when the MSS is utilized. Necessary service connections have been provided in the railroad bay to support the mobile solidification system.

11.5.5 Packaging and Storage

Two processes are employed within the facility. One, for use with solid compressible material, is a baling process. The other, for use with chemical drain tank effluents and spent resin, is a bulk packaging system.

Waste will be collected, sorted and packaged for disposal or prepared for shipment to an offsite broker/processor. The onsite sorting process will separate compactible waste from noncompactible waste and segregate wet articles for drying. The waste will be packaged in its appropriate container, and each container will be marked, decontaminated (if necessary), weighed, monitored for radiation dose rate by Radiological Control, and logged for tracking.

Noncompactible trash is packaged in metal boxes which are sealed when full and stored temporarily in the radwaste packaging area. Solid compressible waste of low radiation levels are compressed in standard 55-gallon drums. After compaction, the drum is closed and stored temporarily in the radwaste packaging area. The drums and boxes are loaded into a commercial vehicle for transfer to the disposal site.

For packaging of effluent from the chemical drain tank, a commercial portable solidification contractor at the plant site receives and solidifies these wastes in liners prior to offsite shipment to the disposal site.

Two methods are used to dispose of spent resin. The method used depends on the properties of the waste at any given time. One process involves transfer of the resin to a liner or high integrity container, dewatering, and finally shipment to the commercial disposal site. The second process involves transfer of the resin to a commercial portable solidification unit for solidification and transfer to a commercial disposal site. Radioactive plant filters are usually packaged in high integrity containers or 55-gallon drums. The filter elements are either remotely or manually removed from the filter housing. Inplant transportation shielding is provided as required. Radioactive filter elements are drummed and stored in a shielded transportation cask or drum shield prior to shipment for disposal. The low activity level filter elements may be handled as intermediate activity level elements, or they may be stored prior to shipment for disposal. Further contingency storage is provided in the Auxiliary Building filter decay pit to be used as necessary.

11.5.6 Storage Facilities

11.5.6.1 Inplant Radwaste Storage Area

Waste containers will be stored in a designated storage area until shipment. Designated inplant storage areas include the waste packaging area and the Auxiliary Building railroad bay. Radioactive material and associated shielding may be stored temporarily in the spent fuel pool and cask loading area.

11.5.6.2 Outside Radwaste Storage

Operational considerations makes it necessary to temporarily store containers of low-level radioactive waste in designated areas (such as the northside storage yard beside the DAW building), in trailers, the rear of the Condensate Demineralizer Building, outside the Auxiliary Building railroad bay, behind Power Stores, the DAW building, and the onsite storage facility yard. Liners of resin not dewatered yet will either be stored in shipping casks or in an area which incorporates a temporary retaining system of sufficient volume to contain any accidental spillage of radioactive waste. Liners of dewatered resin will be stored the same as other containers such as drums and boxes. Use of these areas for storage will be continued as necessary to meet short term storage needs. Drums and boxes of radwaste or radioactive material or liners containing solidified or dewatered material may be stored in outside storage areas after being closed in accordance with approved procedures. The storage areas are administratively controlled to minimize employee exposure.

11.5.6.3 Onsite Storage Facility (OSF)

In order to provide storage for low-level radioactive waste (LLRW) which cannot be shipped, an onsite storage facility has been constructed. This facility is located on a 16-acre site within the Sequoyah Nuclear Plant reservation, but outside the existing security fence approximately 2,000 feet east of the Reactor Building on a peninsula between Chickamauga Reservoir and the cooling tower return channel (see Figure 2.1.2-1). The grade elevation is approximately 730 feet, which is above the probable maximum flood elevation. The nearest existing structures to the storage facility are the cooling towers (closest point is 450 feet south) and the Sequoyah Nuclear Plant boat dock (closest point is 250 feet north).

The facility is comprised of individual buildings called modules. Each module is designed to contain packaged radwaste generated at Sequoyah and Watts Bar Unit 1 and is segmented into four compartments. All of the modules are above-ground, safety-related structures constructed of reinforced concrete. Access to each module is provided only from above, and is only used for placing LLRW in or removing LLRW from the module by a crane. The modules are designed to resist loads resulting from extreme environmental events, such as high winds, tornadoes, and seismic events. The structural characteristics of the OSF meet or exceed the criteria applicable to the Sequoyah site.

A storage module's foundation is composed of concrete base slab and walls placed on either in situ soil or compacted fill. To provide shielding, the outer walls of a resin storage module are 42 inches thick, while the outer walls of a trash storage module are 24 inches thick. The removable concrete caps for both module types are 24 inches thick. The resin module design includes support for more shielding, if needed. All of the modules are capable of storing "as-produced" (i.e., not "volume-reduced," but packaged in a form suitable for disposal) or "volume-reduced" LLRW in a retrievable form. Each module compartment is provided with internal liquid drainage and collection capability routed to an external point for sampling and collection. The external collection point is surrounded by a covered concrete sump connected to the module.

The sump in each module will be used as a passive sump by design to collect any liquid (e.g., fire suppression water) and sampled periodically to detect the presence of water and/or radioactive releases in the module. The interior surfaces of each module (excluding the concrete cap) are sealed with a decontaminable coating.

The OSF structures are designed to contain (within each module) all fire suppression water from a design basis fire in a way that will not preclude processing of the water (if determined to be radioactive) using the existing SQNP liquid radioactive waste treatment system.

The entire OSF is enclosed within an access controlled security fence.

11.5.7 Shipment

Waste is shipped to a commercial disposal site according to Federal regulations and disposal site criteria. Waste may also be shipped to a broker/processor for processing and/or disposal to meet Federal regulations and disposal site criteria.

Drums and boxes containing radwaste are transported from the Sequoyah Nuclear Plant to the disposal facility in a sole-use flatbed or van-type truck trailers. Dewatered resins, solidified resins, and chemical sludges are packaged in liners or high integrity containers and transported either by sole-use van type trailer or in a transportation cask (dependent upon dose rates).

All radioactive waste is packaged and transported in accordance with the TVA Radioactive Material Shipment Manual.

TABLE 11.5.2-1

Maximum Anticipated Total Solid
Waste Generated Per Year

Waste Type	Volume (ft^3)
Spent Resins	1,200*
Spent Filter Cartridges	350
Sludge, and Crud	8,400
DAW Trash Compactible	26,000**
Noncompactible Trash	7,500
Contaminated Waste Oil	100
TOTAL	43,550

*Significant primary-to-secondary leaks could cause an increase in the amount of spent condensate cleanup resin.

**This is the as-generated volume before compaction.

11.6 OFFSITE RADIOLOGICAL MONITORING PROGRAM

The preoperational environmental monitoring program has established a baseline of data on the distribution of natural and manmade radioactivity in the environment near the plant site. The preoperational environmental monitoring program was initiated in the spring of 1971. The operational monitoring program initiated in the spring of 1980 reflects the current monitoring philosophy and regulatory guidelines.

Evaluations after plant startup are made on the basis of the baselines established in the preoperational program, considering geography and the time of the year when these factors are applicable, and by comparisons to control stations where the concentrations of station effluents are expected to be negligible. In those cases where a statistically significant increase in the radioactivity level is seen in a particular sampling vector but not in the control station, meteorology and specific nuclide analysis will be used to identify the source of the increase.

The capability of the environmental monitoring program to detect design level releases from plant effluents is uncertain because the concentrations in the environment are very small. The program provides the capability of detecting any significant buildup of radioactive material in the environment above and beyond that which is already present. Those sectors which are most sensitive to reconcentration of specific isotopes are sampled. If any increase in radioactivity levels is detected in these sectors, the program will be evaluated and broadened if deemed necessary.

From the data obtained from the radioanalytical and radiochemical analyses of the sectors sampled, dose estimates can be made for an individual or the population living near the plant site.

11.6.1 Expected Background

For a number of years measurements of background radiation have been made at various locations throughout the Tennessee Valley Region. TVA has conducted environmental monitoring programs in the vicinity of Oak Ridge, Tennessee, Browns Ferry Nuclear Plant near Athens, Alabama, Watts Bar Nuclear Plant near Spring City, Tennessee, and near Sequoyah Nuclear Plant. Over periods of not less than two years, the measurements made in these areas have indicated only very slight variations from location to location. The measurements obtained utilizing film badges or thermoluminescent dosimeters have revealed the following background radiation dose rate: Oak Ridge - 110 mrem/year, Browns Ferry, Sequoyah, and Watts Bar Nuclear Plants - 55 mrem/year.

Measurements have been made in the immediate vicinity of the Sequoyah Nuclear Plant site and provide the baseline data necessary for comparison of background radiation levels prior to and after startup of the plant.

11.6.2 Critical Pathways to Man

Although the amounts of radioactivity added to the environment from plant operation are small, critical exposure pathways to man have been identified to estimate the maximum dose to the

individual and to establish the sampling requirements for the environmental radioactivity monitoring program. The six principal pathways that can result in radiation exposure to man are:

1. External doses to gaseous releases.

2. Drinking water from the Tennessee River and wells in the immediate vicinity of the plant.

3. Swimming, boating, and fishing in the Tennessee River.

4. Eating fish from the Tennessee River.

5. Consuming milk produced near the plant.

6. Internal doses from inhalation and from eating foods grown in areas adjacent to the plant site affected by the gaseous releases.

The environmental monitoring program, as outlined, provides sampling of critical sectors necessary to evaluate the dose received through the critical pathways in items 1 to 6 above. The following items indicate how samples can be used in performing critical pathway-dose correlation:

1. Data from readings of the thermoluminescent dosimeters can be utilized to estimate the total body dose received from the gaseous effluents.

2. Analysis of water samples collected can be used to estimate the dose that might be received from drinking water from the Tennessee River or from wells in the vicinity of the plant.

3. Analysis of water samples can also be used to estimate the dose an individual might receive while swimming, boating, or fishing on the lake in the vicinity of the plant.

4. Analysis of samples of river water, bottom sediment, and fish can be correlated to estimate the dose that might be received by an individual who eats fish from the Tennessee River.

5. Analysis of samples of air particulate matter, vegetation, food crops, and milk can be used to estimate the dose to the surrounding population through inhalation and the consumption of food or dairy products.

The environmental monitoring program to be conducted throughout operation of the plant provides the necessary means of evaluating the dose to man through critical exposure pathways. All samples referenced will be analyzed for the most biologically-significant gamma-emitting radionuclides found in the gaseous and liquid waste stream of the plant.

Environmental concentrations of radioactivity due to releases to unrestricted areas from the Sequoyah Nuclear Plant may be unmeasurable with present techniques. Therefore, methods to calculate the potential exposure to man have been derived for both gaseous and liquid releases. Calculations of potential exposures from measured environmental levels will only be made if significant concentrations are measured in environmental media.

11.6.2.1 Doses from Gaseous Effluents

The following doses to humans living in the vicinity of the Sequoyah Nuclear Plant will be calculated for the releases of radioactive gases:

1. External beta doses to the skin from air submersion.

2. External gamma doses to the total body from air submersion.

3. Inhalation doses to the maximum exposed organ.

4. Ingestion doses to the maximum exposed organ.

The basic assumptions and calculational methods used in computing these doses are described in Subsection 11.3.9.

The data resulting from the offsite monitoring program will be reviewed and the adequacy of the dose models will be evaluated, as appropriate, to ensure that the actual doses received by individuals and the population as a whole remain as low as practicable and within the applicable Federal Regulations.

11.6.2.2 Internal Doses from Liquid Effluents

The following doses will be calculated for exposures to radionuclides routinely released in liquid effluents:

1. Internal doses from the ingestion of water.

2. Internal doses from the consumption of fish.

3. External doses from water sports.

A detailed description of the basic assumptions and calculational methods used in calculating the doses is given in Subsection 11.2.9.

The dose models employed will be reevaluated, as appropriate, to ensure that all significant pathways are included in the calculations and to ensure that the actual doses received by individuals and the population as a whole remain as low as reasonable achievable and within the applicable Federal regulations.

11.6.3 Sampling Media, Locations, and Frequency

The operational environmental radiological monitoring program is presented in the ODCM. The media selected were chosen on two bases: First, those vectors which would readily indicate releases from the plant, and secondly, those vectors which would indicate long-term buildup of radioactivity. Consideration was also given to the pathways which would result in exposure to man, such as milk and food crops. Locations for sampling stations were chosen after considering meteorological factors and population density around the site. Frequencies for

sampling the various vectors were established so that seasonal variation in radioactivity levels might be determined. In addition, samples are collected during the season in which the major growth occurs to ascertain radioactivity uptake by the vectors during their most susceptible period of growth.

11.6.4 Analytical Sensitivity

Samples are collected routinely following established procedures so that uniformity in sampling methods is assured. The samples are transported to a central laboratory facility for preparation and processing. All the radioanalytical and radiochemical analyses are conducted in the central laboratory. In performing the analyses, pulse height analyzers with state of the art equipment such as Ge detectors, low background beta counters, and liquid scintillation systems are utilized.

The detection capabilities for environmental sample analyses given as the nominal lower limits of detection (LLD) are listed in Table 11.6.4-1. The LLDs listed are the maximum values for the LLDs as presented in the ODCM. Actual values will vary with sample size and radionuclide content, counting time, and background.

The LLD is the smallest concentration of radioactive material in a sample that will be detected with 95 percent probability with 5 percent probability of falsely concluding that a blank observation represents a "real" signal.

For a particular measurement system (which may include radiochemical separation):

$$LLD = \frac{4.66\ s_b}{E \cdot V \cdot 2.22 \cdot Y \exp(-\lambda\ \Delta t)}$$

Where

LLD is the "a priori" lower limit of detection as defined above (as picocurie per unit mass or volume),

s_b is the standard deviation of the background counting rate or of the counting rate of a blank sample as appropriate (as counts per minute),

E is the counting efficiency (as counts per transformation),

V is the sample size (in units of mass or volume),

2.22 is the number of transformations per minute per picocurie,

Y is the fractional radiochemical yield (when applicable),

λ is the radioactive decay constant for the particular radionuclide, and

Δt is the elapsed time between sample collection (or end of the sample collection period) and time of counting (for environmental samples, not plant effluent samples).

The value of s_b used in the calculation of the LLD for a detection system shall be based on the actual observed variance of the background counting rate or of the counting rate of the blank samples (as appropriate) rather than on an unverified theoretically predicted variance. In calculating the LLD for a radionuclide determined by gamma-ray spectrometry, the background shall include the typical contributions of other radionuclides normally present in the samples (e.g., potassium-40 in milk samples). Typical values of E, V, Y, and Δt shall be used in the calculations.

11.6.5 Data Analysis and Presentation

TVA participates in an Interlaboratory Comparison Program. This program provides periodic cross-check samples of the type and radionuclide composition normally analyzed in an environmental monitoring program. The results obtained in the monitoring program and the cross-check program are reported annually to the Nuclear Regulatory Commission.

11.6.6 Program Statistical Sensitivity

As previously noted, because of the small quantities of radioactive material which will be released to the environment from the Sequoyah Nuclear Plant, it is uncertain as to what extent the results from the environmental monitoring program can be used to estimate the probable radiation dose to man. Only if the radioactive waste releases from the plant cause statistically-measurable increases of radiation in the environment can dose correlations be made.

Calculations will be performed utilizing the more concentrated effluent release data and the models given in Subsections 11.2.8 and 11.3.8 to estimate the possible dose to man. Because of the conservative assumptions applied in these models, the estimated dose to the population should be higher than that actually received. However, TVA, even using the conservative assumptions, will control the releases of radioactive materials to the environment such that the releases will be less than the limits described in 10 CFR 20 and 10 CFR 50.

Table 11.6.4-1

DETECTION CAPABILITIES FOR ENVIRONMENTAL SAMPLE ANALYSIS
LOWER LIMIT OF DETECTION (LLD)

Analysis	Water (PCi/l)	Airborne Particulate or Gases (pCi/m)	Fish (pCi/kg, wet)	Milk (pCi/l)	Food Products (pCi/kg, wet)	Sediment (pCi/kg, dry)
gross beta	4	0.01				
H-3	2000[1]					
Mn-54	15		130			
Fe-59	30		260			
Co-58, 60	15		130			
Zn-65	30		260			
Zr-95	30					
Nb-95	15					
I-131	15[2]	0.07		1	60	
Cs-134	15	0.05	130	15	60	150
Cs-137	18	0.06	150	18	80	180
Ba-140	60			60		
La-140	15			15		

[1]If no drinking water pathway exists, a value of 3000 pCi/l may be used.
[2]If a potential exists for the measurable presence of I-131 in drinking water, a value of 1.0 pCi/l shall be used.

APPENDIX 11A

TRITIUM CONTROL

TABLE OF CONTENTS

Section	Title	Page
11A.1	System Sources	11A-2
	11A.1.1 The Fission Source	11A-2
	11A.1.2 Control Rod Source	11A-2
	11A.1.3 Boric Acid Source	11A-2
	11A.1.4 Burnable Shim Rod Source	11A-2
11A.2	Tritium Releases	11A-2
11A.3	Design Bases	11A-3
11A.4	Design Evaluation	11A-3
11A.5	References	11A-4

LIST OF TABLES

Number	Title
11A-1	Tritium Sources in a Typical WNES 4 Loop Reactor Operating at a Power Level of 3582 MWth Curies/12 Full Power Months at a 0.8 Load Factor
11A-2	Tritium Releases for 1971 from Westinghouse Designed Operating Reactors

APPENDIX 11A

TRITIUM CONTROL

This section discusses the reduced tritium production in the plant as a result of employing zirconium alloy clad fuel and silver-indium-cadmium control rods.

11A.1 SYSTEM SOURCES

There are two principal contributors to tritium production within the PWR System: the ternary fission source and the dissolved boron in the reactor coolant. Additional small contributions are made by Li^6, Li^7, and deuterium in the reactor water. Tritium production from different sources is shown in Table 11A-1.

11A.1.1 The Fission Source

This tritium is formed within the fuel material and may:

1. Remain in the fuel rod uranium matrix,

2. Diffuse into the cladding and become hydrided and fixed there,

3. Diffuse through the clad for release into the primary coolant,

4. Release to the coolant through macroscopic cracks or failures in the fuel cladding.

Previous Westinghouse design has conservatively assumed that the ratio of fission tritium released into the coolant to the total fission tritium formed was approximately 0.30 for zircaloy clad fuel. The operating experience at the R. E. Ginna Plant of the Rochester Gas and Electric Company and at other operating reactors using zircaloy fuel cladding shows that the fraction of tritium released to the coolant is substantially less than the earlier estimates predicted. Consequently, the release fraction may be revised downward from thirty percent to ten percent based on this data (Reference 1).

11A.1.2 Control Rod Source

The full length rods for this plant are silver-indium-cadmium. There are no reactions in these absorber materials which would produce tritium, thus eliminating any contribution from this source.

11A.1.3 Boric Acid Source

A direct contribution to the reactor coolant tritium concentration is made by neutron reaction with the boron in solution. The concentration of boric acid varies with core life and load follow so that this is a steadily decreasing source during core life. The principal boron reaction is the B^{10} $(n,2\alpha)$ H^3 reaction. The Li^7 $(n,n'\alpha)$ H^3 reaction occurs with lithium added for pH control. This reaction is controlled by limiting the overall lithium concentration to approximately two ppm during operation. Li^6 is essentially excluded from the system by utilizing 99.9 percent Li^7.

11A.1.4 Burnable Shim Rod Source

These rods are in the core only during the first operating cycle and their potential tritium contribution is only during this period.

11A.2 TRITIUM RELEASES

For a leakage from the Primary Coolant System into the containment of fifty pounds per day, with an assumed tritium concentration in the coolant of 2.5 μCi/cc (no containment ventilation purge), the tritium concentration in the atmosphere of the containment would be low enough to permit access without protective equipment by plant maintenance personnel for an average of two hours per week.

Leakage into the containment atmosphere is based on leakage from equipment such as pumps and valves. Abnormal leakage in excess of the design estimate have occurred in operating plants. The leaking components have been identified and corrective measures have been taken. For example, at Sequoyah, bellows and diaphragm valves are being used to limit leakage.

The total activity which would be released from the containment purge during refueling operations would amount to approximately 110 curies. This activity from evaporative losses will be discharged from the plant as gaseous waste. Similarly, any radioactive gases in the containment would be discharged. Evaporation of tritium from the refueling pool has been considered in evaluating the consequences of tritium on both operators and environmental releases. This indicates maximum tritium concentration in the containment consistent with forty hours per week occupancy and total tritium release of about thirty curies per refueling. Since there is no forced mixing between refueling water and the spent fuel pool, and tritium-free water will be used for makeup, evaporative tritium losses from the spent fuel pool should be minimal.

The tritium source terms in the reactor have been reduced to a sufficiently low level that retention within the plant becomes possible for a significant portion of the reactor lifetime. With an expected production rate of approximately 690 curies per cycle, the tritium concentration would not be expected to reach 2.5 μCi/cc until approximately eight years of plant life. The liquid tritium concentration in the Reactor Coolant System will be controlled by discharging to the cooling tower blowdown via the liquid radwaste system.

11A.3 DESIGN BASES

The design intent is to reduce the tritium sources in the Reactor Coolant System to a practical minimum in order to permit longer retention of the reactor coolant within the plant. Reduction of source terms is provided by utilizing silver-indium-cadmium control rods and the determination that the quantity of tritium released from the fuel rods with zirconium alloy cladding is less than originally expected. (Note: The tritium permeability of M5 cladding is the same as the Zircaloy-4 cladding. Therefore, the tritium release from the M5 clad fuel rods is bounded by the assumed tritium release of the zircaloy clad rods.)

11A.4 DESIGN EVALUATION

Table 11A-1 is a comparison of a typical design basis tritium production which is utilized to establish system and operational requirements of the plant (Reference 1). It will be noted that there are two principal contributors to the tritium production: ternary fission source and the dissolved boron in the reactor coolant. Of these sources it will be noted that the thirty-percent release of ternary fission through the cladding was the predominant contributor in past design considerations.

Because of the importance of this source on the operation of the plant, Westinghouse has been closely following operating plant data. Table 11A-2 represents tritium releases during one calendar year for different Westinghouse PWR plants. Further, a program is being conducted at the R. E. Ginna Plant to follow this in detail. The R. E. Ginna Plant has a zircaloy clad core with silver-indium-cadmium control rods. The operating levels of boron concentration during the startup of the Ginna plant were (following initial fuel loading) approximately 1100 to 1200 ppm of boron. In addition, burnable poison rods in the core contain boron which contributed some tritium to the coolant, but only during the first cycle. Data during the operation of the Ginna plant has indicated very clearly that the present design sources were indeed conservative. The tritium released is essentially from the boron dissolved in the coolant and a ternary fission source which is less than one percent. In addition to this data, other operating plants with zircaloy clad cores have also reported very low tritium concentrations in the Reactor Coolant system after considerably longer operation. The use of M5 clad material (Zr-Nb) (Reference 2) will not change the conclusions of this evaluation.

Based on the above, the following conclusions have been reached:

1. The tritium levels in plants operating with zirconium alloy clad cores will be substantially lower than previous design predictions.

2. The tritium source in the plants will be reduced by utilizing silver-indium-cadmium control rods.

3. The tritium in the containment purge and the containment ventilation air during refueling will be discharged.

11A.5 REFERENCES

1. J. Locante and D. D. Malinowski, "Tritium in Pressurized Water Reactors," American Nuclear Society Transactions, Vol.14, No. 1, 1971.

2. Evaluation of Advance Cladding and Structural Material (M5) in PWR Reactor Fuel, BAW-10227P-A, February 2000.

3. Sequoyah Nuclear Plant M5 Design Report, BAW-2396, May 2001.

TABLE 11A-1*

TRITIUM SOURCES IN A TYPICAL WNES 4 LOOP REACTOR OPERATING AT A POWER LEVEL OF 3582 MWth CURIES/12 FULL POWER MONTHS AT A 0.8 LOAD FACTOR

Tritium Source	Total Produced (Ci)	Released to the Coolant (Ci)
Ternary Fissions	11000	110
Burnable Poison Rods[1] (Initial Cycle only)	980	10
Control Rods	0	0
Soluble Poison Boron		
(Initial Cycle)[2]	400	400
(Equilibrium Cycle)[3]	560	560
Li^7 Reaction	11	11
Li^6 Reaction	6	6
Deuterium Reaction	1	1
Total (Initial Cycle)	12398	538
Total (Equilibrium Cycle)	11578	688

(1) Weight of B_2O_3 = 221 lb (B^{10} - 13.58 lb)

(2) Initial boron (hot, full power, equilibrium xenon) = 860 ppm

(3) Initial boron (hot, full power, equilibrium xenon) = 1200 ppm

* Background & Historical Information Only

TABLE 11A-2*

TRITIUM RELEASES FOR 1971 FROM
WESTINGHOUSE DESIGNED OPERATING REACTORS

Plant	Total Released Curies	Avg. Discharge Concentration μCi/cc	Fraction 10 CFR 20 (3×10^{-3} μCi/cc)**
Yankee Rowe[1]	1633	5.9×10^{-6}	2.0×10^{-3}
Connecticut Yankee[1]	5830	7.7×10^{-6}	2.6×10^{-3}
San Onofre[1]	4570	6.7×10^{-6}	2.2×10^{-3}
Ginna[2]	154	2.3×10^{-7}	7.7×10^{-5}
H. B. Robinson No. 2[2]	118	1.7×10^{-7}	5.7×10^{-5}
Point Beach No. 1[2]	266	4.7×10^{-7}	1.6×10^{-4}

(1) Stainless Steel Clad

(2) Zircaloy Clad

* Background & Historical Information Only

** Calculated values shown are based on 10 CFR 20 concentrations prior to January 1, 1994.

TABLE OF CONTENTS

Section	Title	Page
12.0	RADIATION PROTECTION	
12.1	SHIELDING	12.1-1
12.1.1	DESIGN OBJECTIVES	12.1-1
12.1.2	DESIGN DESCRIPTION	12.1-1
12.1.3	SOURCE TERMS	12.1-11
12.1.4	LOW RANGE AREA MONITORING	12.1-11
12.1.4.1	Objectives and Design Basis	12.1-11
12.1.4.2	Operational Characteristics	12.1-11
12.1.4.3	Calibration and Maintenance	12.1-12
12.1.5	OPERATING PROCEDURES	12.1-12
12.1.6	ESTIMATES OF DOSES	12.1-13
12.1.7	REFERENCES	12.1-15
12.2	VENTILATION	12.2-1
12.2.1	DESIGN OBJECTIVES	12.2-1
12.2.2	DESIGN DESCRIPTION	12.2-1
12.2.2.1	Containment Ventilation Systems	12.2-1
12.2.2.2	Auxiliary Building Ventilation System	12.2-2
12.2.2.3	Turbine Building Ventilation System	12.2-2
12.2.2.4	Control Room Ventilation System	12.2-3
12.2.3	SOURCE TERMS	12.2-3
12.2.4	AIRBORNE RADIOACTIVITY MONITORING	12.2-3
12.2.4.1	Fixed Airborne Radioactivity Monitoring Systems	12.2-3
12.2.4.2	Airborne Radioactivity Measurements By Laboratory Analysis Of Collected Samples	12.2-5
12.2.5	OPERATING PROCEDURES	12.2-5
12.2.6	ESTIMATES OF DOSES	12.2-6

TABLE OF CONTENTS

Section	Title	Page
12.2.7	REFERENCES	12.2-6
12.3	RADIOLOGICAL CONTROL PROGRAM	12.3-1
12.3.1	PROGRAM OBJECTIVES	12.3-1
12.3.2	FACILITIES AND EQUIPMENT	12.3-1
12.3.3	PERSONNEL DOSIMETRY	12.3-2
12.4	LEAKAGE REDUCTION PROGRAM	12.4-1
12.4.1	WASTE GAS SYSTEM	12.4-1
12.4.2	LIQUID SYSTEMS	12.4-1

LIST OF TABLES

Number	Title
12.1.2-1	Access Control Areas
12.1.4-1	Location of Plant Area Monitors
12.1.6-1	Peak External Dose Rates
12.2.4-1	Fixed Airborne Activity Monitoring Channels (Normal Conditions)
12.2.4-2	Fixed Airborne Activity Monitoring Channels (Accident Conditions)
12.2.4-3	Monitor Readouts
12.2.6-1	Estimated Doses for Expected Activity Levels in Various Buildings
12.4.2-1	Inspections

12.0 RADIATION PROTECTION

12.1 SHIELDING

12.1.1 Design Objectives

The design objectives of the plant shielding are the following:

1. During normal operation, including anticipated operational occurrences, to restrict doses to onsite personnel including TVA employees, contractor employees, and visitors such that doses do not exceed applicable limits of 10 CFR 20.

   In addition to the requirements of 10 CFR 20, the following total effective dose equivalent limits shall be observed.

   The annual 5 rem limit would be exceeded only if it is demonstrated that all ALARA considerations have been closely evaluated and the additional exposure of the individual would result in a reduction of collective occupational dose. Exceeding the 5 rem limit requires the initiation of a Planned Special Exposure and subsequent reporting to the NRC.

2. The philosophy of maintaining radiation doses as low as reasonably achievable (ALARA) is integrated into all shielding and design considerations.

3. To restrict offsite doses in accordance with the ALARA provisions in 10 CFR 50.

4. To limit, under accident conditions, the offsite dose from activity in the containment so that the total dose from this source and from airborne radiation will not exceed the 10 CFR 100 dose limits.

5. To satisfy the requirements of 10 CFR 50, Appendix A, Criterion 19. Sufficient radiation protection is provided to permit access and occupancy of the control room under accident conditions without personnel receiving excessive radiation dose. The sum of the doses an operator receives during any such extra-control room visits and those received while gaining access to and occupying the control room will not exceed doses of 5 rem total effective dose equivalent.

12.1.2 Design Description

Plant Shielding

In numerous cases where access requirements are expected to range from almost continuous occupancy to a few hours per week, shielding is required to achieve acceptable dose rate levels. The shielding design level supports the access control area requirements of Table 12.1.2-1. ALARA considerations may warrant further reduction of base level dose rates and thus increased shielding.

Layouts of the containments and surrounding Shield Buildings and of the Auxiliary, Control, and Turbine Buildings are provided in Figures 1.2.3-1 through 1.2.3-13. While generally to scale,

these equipment drawings cannot be scaled to determine accurately the thickness of concrete shield walls. The Turbine Building and Service Building contain only relatively minor radiation sources.

Shield Walls

Presented in this section are the criteria for the erection of the plant shield walls and for penetrations through these walls. The calculational methods used to determine the thickness and other dimensions of the shield walls are given at the end of this subsection.

Many structural walls also serve a shielding requirement which often sets the wall thickness. Some walls serve only a shielding function. Most of these shielding walls are cast in place up to within two inches of the ceiling above. When necessary, this gap between wall and ceiling is filled over part of the wall thickness with grout. Those shield walls or portions of shield walls that are subject to removal for equipment repair or replacement are constructed of solid concrete blocks.

Except for two applications, which are cited in later subsections, the poured concrete shield walls throughout the plant are ordinary concrete with a minimum density of 145.0 lb/ft^3.

In general shield walls are always erected around any plant component or piping if design level activity at any time in plant life can result in dose rates greater than 50 mrem/hr unless they are remote from general access areas. Areas where design deep dose equivalent rates are between 5 and 50 mrem/hr are normally shielded unless they are remote from general access areas or unless the dose rates will exist for very short times. In many cases, particularly when the design dose rates are toward the upper end of this range, shield walls are erected around these areas even though one of the conditions exists that could justify simply designating the unshielded areas as radiation areas and following the area identification and entry requirements given in Table 12.1.2-1.

Access to many equipment enclosures is provided through the sidewalls of the compartments. In these cases, the effectiveness of the shield walls in limiting dose rates outside the equipment enclosures is maintained by providing labyrinth entrances. Access to some equipment enclosures, principally filter, demineralizer, and waste gas decay tank cubicles, is through the floor above. In these cases, the removable concrete floor slab that provides the entrance generally has the same thickness as the cubicle walls.

The design criterion for shield wall penetrations in the Auxiliary Building, such as those for piping and ventilation ducts is to locate them, whenever practical, so that their effect on the deep dose equivalent rates in accessible areas outside the shielded enclosure is minimized. Often this criterion is satisfied by locating the penetrations as nearly as possible to the corners and to the ceiling of the shielded enclosure. In using this technique, however, consideration is given to the increased length of piping sources that may result. If direct or reflected radiation passing through the penetrations of a shield wall creates a radiation area outside the wall, the criteria given for the erection of shield walls are used to establish the necessity for a wall to shield this area.

The following general shielding considerations are employed in the arrangement of Shield Building penetrations:

1. Where practical, most penetrations of the Shield Building, except those that connect the Shield Building to a shielded enclosure in the Auxiliary Building, are opposite unpenetrated

areas of the crane wall. This arrangement adequately shields outside areas and areas inside the Auxiliary Building from sources inside the containment shell during normal operation. When this arrangement is not used, shadow shields are provided to eliminate radiation streaming from major sources inside the containment to areas outside the Shield Building.

2. Radiation sources in the annulus between the containment and the Shield Building are located behind unpenetrated portions of the Shield Building or behind the Shield Building penetrations that connect the Shield Building to shielded enclosures in the Auxiliary Building.

3. Penetrations of crane wall sections that provide necessary shielding for containment areas accessible during power operations are avoided.

4. Shadow shields are provided at Shield Building penetrations that connect the Shield Building to unshielded areas where access cannot be completely controlled during accident conditions.

Valve and Valve-Operating Stations

The following arrangements are used for manually-operated valves that control process equipment functions:

1. Valves are located and operated in the enclosure with the controlled equipment. This arrangement is used only when design level activities in the equipment and piping and anticipated occupancy for valve operation are such that acceptable dose limits will not be exceeded. This arrangement is not used if the deep dose equivalent rate at the valve is greater than 100 mrem/hr. The limit imposed in the case of each valve depends on expected occupancy requirements and is generally much less than 100 mrem/hr. Another requirement for using this arrangement is that sources and piping in the equipment enclosure can be sufficiently removed, without economic penalty, to allow valve maintenance or that design activities are low enough to keep personnel doses under acceptable levels during valve maintenance without source removal. (Source removal can involve pumping or draining a liquid, venting a gas, flushing demineralizer resin, or replacing a filter cartridge.) For this purpose, acceptable deep dose equivalent rate is 6 mrem/hr. To perform maintenance for an 8-hour shift at an average dose rate above this level, an employee needs to work under an approved radiation work permit.

2. Valves are located and operated in a radiation area outside the equipment enclosure. With this arrangement, deep dose equivalent rates at the valve must be less than 100 mrem/hr and generally much lower limits are set.

3. In the third type of arrangement, valves are located in the equipment enclosure but are operated from behind a shield wall. For this arrangement, deep dose equivalent rates at the valve operating station is typically less than 15 mrem/hr. The dose limitations during valve maintenance are the same as those for the first arrangement.

4. Valves are located in a valve gallery. Generally, a number of valves share a valve gallery. Typically, these are most of the valves that serve a few identical or similar plant components. One side of the valve gallery is formed by a shield wall which separates the valves from the process equipment. The opposite side of the gallery is a shield wall which is penetrated by either extension stem arrangements joining valves to handwheel operators or by flexible shaft controls.

The extension stem is solid metal and the annular space between extension stem and shield wall sleeve is grout filled. With this arrangement, the effectiveness of the shield wall between valves and handwheel operators is virtually undisturbed and the deep dose equivalent rates at the handwheels are less than 5 mrem/hr. In some cases, ducts for the shafts follow an oblique or curved path through the wall to prevent direct radiation streaming from high intensity sources. The design deep dose equivalent rate outside the valve gallery for this arrangement is 2.5 mrem/hr.

The first design objective of the valve gallery is to allow valve maintenance without first removing the sources from the process equipment. Some of the design guides to achieve this objective are the following:

a. Penetrations through the shield wall between the equipment enclosures and valve gallery are as near the ceiling and as close to the corner of the equipment enclosures as practical.

b. Piping runs in the gallery, that will contain radioactive fluid when the control valve is isolated for maintenance, are kept as short as practical.

c. Excessive annular spaces between pipe and pipe sleeve in the wall between equipment and valves are avoided.

With these precautions, it is expected that the design objective of 6 mrem/hr deep dose equivalent rate will be achieved when the process equipment contains up to a significant fraction of design level activity. The design objective should be achieved in most cases even when the process equipment contains design level activity. As an outside limit, the design assures a dose rate of less than 100 mrem/hr in the valve gallery during valve maintenance without removal of the process equipment sources. Even at dose rates of 100 mrem/hr, some valve inspection and maintenance would be possible.

A second objective for locating some of the valves in valve galleries instead of in the equipment enclosures is that even after removal of the process sources, the remaining activity on the inside walls of the equipment and/or high contamination levels in the enclosure may require extensive decontamination work before valve maintenance if the valve is located in the enclosure.

A third objective for locating control valves in valve galleries is that this arrangement provides a second shield between process equipment and general access areas. This is a worthwhile consideration when any unanticipated shielding deficiencies can result in high dose rates.

Another advantage is that, in the unlikely event of valve operator failure, the valve gallery arrangement allows limited direct operation at the valve location until maintenance is performed.

Most of the advantages of locating hand-operated valves in valve galleries also apply to the location of remote-manual (motor-operated or pneumatically-operated) valves in valve galleries.

Manually-operated valves used to isolate, drain, or vent process equipment such as pumps that contain relatively small amounts of activity are generally located and operated in the enclosure with the equipment. As a rule, remoting the valve and/or its operation from the equipment is a design consideration only when one or both of the following conditions can exist: (1) the anticipated dose from the process equipment during valve operation is significant, and (2) the anticipated dose received from the equipment during valve maintenance is significant and large compared with that which could be received if a remote valve station were used.

A valve is not normally used to isolate, drain, or vent process equipment located and operated in the enclosure with the equipment if the deep dose equivalent rate is greater than 100 mrem/hr. The limit selected for each valve depends on the expected occupancy time at the valve station and is generally much less than 100 mrem/hr. If anticipated dose rates are too high to allow location and manual operation of the valve in the enclosure with the equipment, one of the following procedures is used: (1) the operation of the valve is from behind a shield wall which limits the deep dose equivalent rate at the operating location to less than 15 mrem/hr, or (2) the valve is located in a valve gallery and operation of the valve is from behind the valve gallery wall which restricts the deep dose equivalent rate at the valve operating location to 2.5 mrem/hr. Typically, these valves share a valve gallery with the equipment control valves.

Motor-operated or pneumatic valves that isolate, drain, or vent process equipment are located in valve galleries if process equipment activity levels could be high enough to prohibit emergency access to the valves.

Primary and Secondary Shielding

The primary shield consists of the following parts:

1. Shield elements inside the reactor pressure vessel. These elements, which are the core baffle, the core barrel, the thermal shield, and water annuli, provide a water shield and a steel shield, each several inches thick.

2. The reactor pressure vessel.

3. A concrete structure surrounding the reactor vessel from the floor at the 679.78 elevation to the floor at the 702.12 elevation. The concrete thickness is 5 feet 9 inches on the radius through each of eight out-of-core neutron detector slots. On all other radii, the concrete thickness opposite the active fuel is 8 feet 6 inches. There is an opening in the shield at each of the eight primary coolant pipes. Four of the openings start at the vessel flange surface elevation of 702.12 and go down to elevation 689.71. The other four openings extend from the vessel flange surface to elevation 692.0.

That part of the opening above each pipe is covered with a permanently installed plate. Removal of the plates during shutdown allows inspection of the weld joints between the primary coolant pipes and the reactor vessel nozzles. Inspection time available will be very limited since dose rates levels under pressure vessel equilibrium Co-60 and Fe-59 activity conditions will be on the order of 10 rem/hr at the bottom of the opening and 1 rem/hr at the top.

Except across the refueling canal, the primary concrete structure extends upward at reduced thickness (minimum is 2 feet 6 inches) from the 702.12 elevation to the operating floor

(elevation 733.63). (The blowout panels in this upper structure are located just under the floor at elevation 733.63. The panels extend from elevation 731.13 down to elevation 726.63. With this arrangement, radiation from the reactor vessel that penetrates the blowout panel area is attenuated by at least one reflection off concrete before it reaches accessible plant areas outside the primary concrete.) The upper part of the primary concrete shielding is completed by the walls of the refueling canal which extend upward from elevation 686.23, by the control rod drive missile shield and by a gate which spans the refueling canal from elevation 733.63 down to elevation 702.12. The control rod drive missile shield and the gate are removed during refueling. The primary shielding makes possible necessary access inside the crane wall during shutdown.

The secondary shield consists principally of the crane wall, the Shield Building, the concrete operating floor at elevation 733.63, and the concrete structures which combine with the crane wall to enclose those sections of the steam generators and the portion of the pressurizer that extend above elevation 733.63.

In addition to their providing biological radiation protection, the primary and secondary shielding are arranged and structured to provide additional shielding functions such as:

1. The primary shielding elements inside the vessel attenuate neutron flux sufficiently to prevent excessive radiation damage to the reactor vessel.

2. The primary shielding prevents excessive radiation damage to plant components from neutron and gamma radiations, and the secondary shielding prevents excessive radiation damage to plant components from gamma radiation.

3. The metal and water inside the pressure vessel and the pressure vessel itself serve to reduce the heat flux from neutron and gamma radiation at the vessel outer surface. Cooling necessary to avoid high temperatures and possible dehydration in the surrounding concrete is, thus, an easier task.

4. Parts of the primary and secondary shields serve as portions of the divider, necessary for the ice condenser containment, between lower and upper containment compartments.

5. The Shield Building, which is part of the secondary shielding, is also part of the double containment.

Personnel enter and leave the containment vessel through either of two personnel airlocks. To protect (from primary coolant system radiation) personnel entering the containment through the airlock from the platform at elevation 693.0, heavy concrete with density 218.0 lb/ft^3 is used in a section of the crane wall. With the reactor at significant power levels, personnel access to the lower compartment, as defined in FSAR Reference 15.5.8.17, will be prohibited except under cases of critical need. During full power operation, the upper compartment and the ice condenser upper plenum will be entered infrequently but as necessary for upper compartment inspection and ice bed and ice condenser inspection and maintenance. The seal table and instrument room will be entered as necessary during full power operation. The accumulator rooms, ventilation equipment rooms, and tunnel area outside the crane wall will be entered from the seal table and instrument room only as needed and as radiation and airborne contamination permit. Access to the annulus between the containment vessel and the Shield Building is not normally required during power operation; however, access, if necessary, is through an airlock.

Auxiliary Building Shielding

Shielding in the fuel-handling area of the Auxiliary Building is discussed in a following subsection. The balance of the shielding in the Auxiliary Building protects personnel during normal operation, including anticipated operational occurrences, from the components and piping of the following systems and facilities:

1. Chemical and Volume Control System (CVCS).

2. Waste Disposal Systems (WDS).

3. Residual Heat Removal System (RHR).

4. Spent Fuel Pit Cooling System (SFPCS).

5. Sampling System collection and analysis facilities.

The hot instrument shop and decontamination area enclosures furnish some minimal shielding, but their main function is to minimize the spread of contamination.

The Auxiliary Building shielding is designed to limit deep dose equivalent rates in accessible corridors and open spaces in the building to 1.0 mrem/hr; however, exceptions occur at certain shield wall penetrations. If the dose rate at a penetration exceeds 5.0 mrem/hr, the procedures in Table 12.1.2-1 for designating radiation areas apply. Auxiliary Building shielding is also designed so that equipment areas may be entered for maintenance without shutdown of adjacent operating systems or system equipment. Satisfying this requirement results in a high degree of compartmentalization in the building.

Most piping carrying fluid of high specific activity is routed through shielded pipe chases. The pipe chase walls have a minimum thickness of 27 inches of concrete. Pipe chases run along the A5 line (Unit 1) and A11 line (Unit 2) on elevations 653.0 to 734.0. (See Figures 1.2.3-3 through 1.2.3-7.) The pipe chase areas are enlarged at one end between the floors at elevations 690.0 and 714.0 to form Shield Building penetration areas. Most radioactive fluid-carrying pipes running from the containments to the Auxiliary Building pass through these pipe chase sectors which extend from approximately Az 270 to Az 300 degrees. Another pipe chase runs along the fuel transfer canal and adjoins the A5 and A11 line pipe chases between the floors at elevations 690.0 and 714.0. A concrete partition in this pipe chase along the A8 line, between units, inhibits the spread of contamination from one unit to the other should a pipe rupture occur.

Fuel Transfer Shielding

During fuel transfer operations, the fuel transfer canal, spent fuel pit, refueling canal, and the region above the open reactor vessel are filled with borated water to approximately elevation 726.12. The bottom of the refueling canal is at elevation 686.23 in the fuel assembly tilting device area. A fuel assembly is transferred from the reactor vessel through the refueling canal toward the Auxiliary Building. It travels in a fuel transfer tube from the containment to the fuel transfer canal in the Auxiliary Building, and it is then moved into a storage location in the adjacent spent fuel pit.

After the fuel transfer has begun, the principal radioactive sources in the proximity of the fuel assembly transfer path are the following: (1) activity in the water which is a mixture of reactor coolant and water from the refueling water storage tank, and (2) the fission product inventory in the fuel assembly being transferred. During nuclear fuel transfer activities, personnel are in the immediate area of the fuel transfer canal. Radiation dose exposures are maintained ALARA by various means including the minimization of stay time and controlling source terms.

The minimum water shield above the active fuel region of a spent fuel assembly as it moves from the reactor vessel to the storage position in the spent fuel pit is approximately 10 feet (approximately 9 feet above the fuel assembly). The design of the transfer equipment incorporates restraints to ensure that this water shield is maintained which keeps radiation levels within acceptable limits. Except for an emergency passageway under the fuel assembly tilting device in the refueling canal, the transfer of spent fuel assemblies does not generate any high-radiation areas in accessible plant areas. The minimum shielding between the fuel assembly and the emergency passageway is three feet of heavy concrete (density = 218 lb/ft^3). The deep dose equivalent in the passageway is less than 37 mrem/hr. The minimum shielding inside the primary containment between fuel assembly and personnel on the floor at elevation 693.0 is one foot of water and over 5 feet 6 inches of ordinary concrete. The corresponding maximum deep dose equivalent rate is less than 5 mrem/hr. During fuel assembly transfer, the region in the annulus between the steel containment and the Shield Building is protected from the fuel assembly by concrete and water equivalent to more than six feet of concrete. A radiation streaming gap between the steel containment and the concrete on each side of it in the vicinity of the fuel transfer tube is avoided by offsetting the concrete and attaching to each side of the steel containment a steel ring. Similarly, offsets in the Shield Building concrete and in the Auxiliary Building wall in the vicinity of the transfer tube are used to avoid a direct streaming path between these two structures. The above radiation analyses are summarized in SQN-DC-V-21-0, FSAR Reference 15.5.8.17.

When the spent fuel assembly is outside the Shield Building, during passage through the Auxiliary Building wall and fuel transfer canal to the spent fuel pit, it is shielded by a minimum of six feet of concrete or by a minimum of 10 feet of water. Spent fuel pit concrete walls which separate spent fuel assemblies in their storage locations from the Auxiliary Building access area at elevation 669.0 are seven feet thick.

For dry cask storage operations, the minimum water shield above the active fuel region of a spent fuel assembly as it moves from the spent fuel pit to the cask loading area is approximately 10 feet (approximately 9 feet above the fuel assembly). The design of the transfer equipment incorporates restraints to ensure that this water shield is maintained which keeps radiation levels within acceptable limits. Refer to the HI-STORM FSARs (Holtec Reports HI-2002444 and HI-2114830) for radiation doses affiliated with the HI-STORM 100 Cask System and the HI-STORM FW Storage System.

Turbine Building and Service Building

Activity in the Turbine Building occurs only in the event of steam generator primary-to-secondary leakage. Almost the entire Turbine Building is an unlimited access area. For an extreme case of primary-to- secondary leakage of 1 gal/min per unit (2 gal/min per plant), some accessible areas immediately adjacent to the Condenser Vacuum Exhaust System, including the optional use of HEPA filters and charcoal absorber train, could become Radiation Areas.

There are several areas of low activity level in the Service Building such as the hot machine shop, radiological control laboratory, and radiochemical laboratory. A water retention system is provided to prevent the possible release of contaminated water after the fire protection sprinkler system actuates.

Enclosures about these areas furnish necessary shielding, but their principal purpose is to minimize the spread of contamination.

Outside Areas

Except for the following, all areas outside the plant buildings are unlimited access areas as defined in Table 12.1.2-1 during normal operation including anticipated operational occurrences.

1. For short periods of time when solid waste shipping is imminent, the casks will be outside. The number of casks allowed outside at any one time is controlled and depends on the dose rates from each. The maximum dose rate from each cask satisfies the provisions of 49 CFR 173. Access to the outside region where these casks are located during the short preshipment periods is controlled. The type of control required depends on the designated access type which, in turn, is established by the dose rate.

2. During solid waste and spent fuel shipment, the area immediately adjacent to the transport vehicle may be reevaluated.

3. There are six outside tanks that contain radioactive liquids: two refueling water storage tanks, two primary water storage tanks, and two condensate storage tanks. The activity in each is low level, and no shielding is required. Maximum deep dose equivalent rates at the exclusion area boundary from these tanks is 2.0E-4 mrem/hr for all tanks total. The radiation analysis is summarized in SQN-DC-V-21.0, FSAR Reference 15.5.8.17.

4. Guidance for the cumulative radiation dose to the public is provided in 10 CFR 20.1301 and 10 CFR 72.104. SQN is a dual NRC licensed facility that will [1] produce nuclear power with Unit 1 and Unit 2 in accordance with 10 CFR Part 50 and [2] will store spent fuel utilizing up to 90 fuel-loaded overpacks (the HI-STORM 100 Cask System and the HI-STORM FW System overpacks) in accordance with 10 CFR Part 72.210. Therefore, the radiation doses affiliated with the operations of SQN Unit 1 and Unit 2 reactor power facilities must be summed with the dose from 90 fuel-loaded overpacks (the HI-STORM 100 Cask System and the HI-STORM FW System overpacks) and yield a total value less than the limitation provided by 10 CFR 20.1301 and 10 CFR 72.104. This summation is provided in SQN's Independent Spent Fuel Storage Installation (ISFSI) Section 9.1.5 (Reference calculations SQN-TI-534, SQS2-0171, and SQS2-0234).

5. The Unit 1 and Unit 2 Old Steam Generator Storage Faciilities (OSGSFs) are non-quality related, non-seismic, reinforced concrete structures that provide interim storage for the Old Steam Generators (OSGs) that were removed from the Unit 1 and Unit 2 reactor buildings as a result of the steam generator replacements during the Unit 1 Cycle 12 outage and the Unit 2 Cycle 18 outage. The OSGSFs are located north of the plant, outside the protected area, but within the exclusion area and site boundary. The general locations of the OSGSFs are shown on Figure 2.1.1-1.

   The reinforced concrete walls and roof (minimum density of 150 lb/cft) of the Unit 1 and Unit 2 OSGSFs and their access vestibules have been designed to ensure that the dose rates outside the facilities are within the limits of 10 CFR 20 and 40 CFR 190 (See References 9 and 10). The interior of each OSGSF is classified as a "high radiation area (controlled)" and the vestibule entrance is classified as a "regulated access" area as defined in UFSAR Table 12.1.2-1.

   The radiation dose assessment was accomplished using the SHIELD-SG and Multigroup Oak Ridge Stochastic Experiment (MORSE) computer codes. SHIELD-SG is a point-kernel program used to calculate direct doses at various distances from the source. MORSE is a Monte-Carlo program that calculates direct and skyshine doses. See Reference 9.

Shielding For Accident Conditions

Some shielding provided for normal operation also has a function during accident conditions. However, other shielding has a function during accident conditions only. This accident shielding is required to serve two functions: (1) it must restrict the dose at the exclusion area boundary from activity in the containment to a small fraction of 10 CFR 100 limits, and (2) it must attenuate dose rates at interior and other onsite locations from activity in the containment to levels which will allow required access. Requirements are the following:

1. Continuous control room occupancy is required.

2. Visits of several minutes duration into the shutdown board rooms to operate breakers and switches must be possible. For these visits, which may occur at any time after the start of accident conditions, the operator will wear appropriate protective equipment.

3. Since a single crew cannot remain in the control room for the duration of the accident, it must be possible to make the trip from the exclusion area boundary to the control room sometime after 24 hours without receiving an excessive dose.

4. The diesel fuel will have to be replenished during the course of the accident. The onsite storage allows about seven days of operation.

The Shield Building is the principal structure that limits dose at the exclusion area boundary and at site exterior locations from activity in the containment. The Shield Building also, in concert with other shields, limits dose rates at interior and other onsite locations. The accident shielding functions of the Shield Building are shared by the structures that shield its penetrations, such as the steam line penetrations, the personnel hatches, the equipment hatch, ventilation ducts, and the many smaller penetrations. Some of the structures that shield the Shield Building penetrations are Auxiliary Building internal walls. These and other Auxiliary Building walls and the Auxiliary Building ceilings further attenuate radiation from sources within the containment to improve accessibility during accident conditions.

The ESF equipment compartment shielding provides for emergency maintenance. To make possible this maintenance, the equipment will be drained before the maintenance begins and the operator will wear appropriate protective equipment. In the case of ESF equipment, such as the RHR pumps which also operate during normal operation, the shielding required for normal operation is controlling.

The control room is shielded so that the total effective dose equivalent from external sources (activity inside the primary containment, in the passing cloud, and in surrounding rooms) obtained during occupancy following a LOCA is less than 5.0 rem. The remainder of the total effective dose equivalent will come from the airborne activity within the control room. (The dose from this airborne activity which is more difficult to limit than that from the external sources is discussed in Subsection 15.5.3, which considers integrated doses in the control room under accident conditions from all sources.)

In the control room shielding design, sufficiently thick walls, ceiling, and floor are provided. In addition, special attention is given to the doorways. Radiation shielding is provided at the entrances from the Turbine Building to attenuate radiation from the radioactive cloud which is assumed to occupy the Turbine Building. The door shielding shall have a radiation attenuation coefficient greater than or equal to the Main Control Room C36 pressurization door including the security bullet plate barrier.

Analysis shows that shield doors at the small entrances from the control room to the Auxiliary Building are not necessary.

A control room layout drawing is included as Figure 1.2.3-3.

Shielding Calculations

Shielding required to reduce the dose rates, from conservative source strengths in known source geometries as design objective values, are determined with hand calculations and/or with computer codes. Both the hand calculations and the computer codes employ the point-to-point kernel integration method. The PATH code and the QAD-P5Z code integrate the basic exponential attenuation point kernel over the various geometries to provide the uncollided gamma-ray flux. Many of the integrations found in the Reactor Shielding Design Manual (Reference 2) are utilized. Dose rates are obtained by multiplying the uncollided flux by the product of the flux weighted buildup factor and a dose-conversion factor. The computer program COROD is used to solve the equations for the beta and gamma dose rates from airborne activity in the control room. COROD also provides the gamma dose rate after attenuation by a shield. The equations solved are given in Subsection 15.5.3.

The computer codes addressed above are utilized in radiation analyses to demonstrate compliance to 10 CFR 20, 10 CFR 50.49, 10 CFR 50 Appendix AGDC-19, and 10 CFR 100 requirements. These analyses are summarized in SQN-DC-V-21.0, FSAR Reference15.5.8.17.

12.1.3 Source Terms

Radiation analyses utilized for normal plant operations and post accident conditions are described in FSAR Chapters 11.1 and 15.5, respectively. These radiation analyses are summarized in SQN-DC-V-21.0, FSAR Reference 15.5.8.17.

12.1.4 Low Range Area Monitoring

12.1.4.1 Objectives and Design Basis

Area radiation monitors are provided to assist in compliance with 10 CFR 50, Appendix A, General Design Criteria 19, 63, and 64, and with 10 CFR 20.

Monitors are provided to monitor exposure rates and warn plant personnel of increasing radiation levels in the general area of the monitors.

12.1.4.2 Operational Characteristics

Table 12.1.4-1 lists the physical location of each area monitor, type of detector, and detector range. The area Radiation Monitoring System has the following operational characteristics.

12.1.4.2.1 Area Monitor Detector

Detectors are Geiger-Mueller type gamma detectors. Each detector has its own independent high-voltage power supply located in the Main Control Room (MCR) and has a remote-operated check source mechanism with actuation from its rate meter in the MCR.

12.1.4.2.2 Deleted

12.1.4.2.3 Local Indicating Ratemeter

With the exception of the MCR monitor, each monitor has a local indicator, high radiation light and audible alarm, and a power-on light.

12.1.4.2.4 Trending

The area monitors are trended on multi-point recorders or on the plant computer in the main control room.

12.1.4.2.5 Range and Setpoints

The ranges of the instrumentation are provided in Table 12.1.4-1. The area monitor's setpoints are adjustable over the entire range.

12.1.4.3 Calibration and Maintenance

Periodic calibrations will be performed on each monitor. The calibration procedure may be performed by means of sequential, overlapping, or total channel steps including:

1. Calibration check of each monitor using a portable radiation calibration source.

2. Electronic calibration of all ratemeters and recorders.

3. Verification for all monitors that "Instrument Malfunction" annunciation is initiated on downscale ratemeter trip or loss of power.

4. Verification that "High Radiation" annunciation is initiated on upscale ratemeter trip.

5. Each detector is checked using its built-in check source.

Maintenance will be performed if any of the above checks indicate a malfunction. Unscheduled maintenance will be performed as required.

12.1.5 Operating Procedures

Radiation protection systems and administrative controls are designed to maintain radiation doses within the site ALARA goals and within the criteria specified in 10 CFR 20 during normal operations. Plant areas are classified into zones with varying degrees of administrative control. Allowable dose rates are based on anticipated frequencies and duration of occupancy. Dose rates and occupancy times are controlled. Table 12.1.2-1 summarizes these general classifications of plant areas.

The entrance to all zones are marked in accordance with the regulations of 10 CFR 20. To prevent inadvertent entry by personnel into high and very high radiation areas (controlled or prohibited classifications) rigid access control is maintained, including locked or barricaded doors, interlocks, and a system of local and remote alarms. Administrative control includes the use of radiation work permits, radiological control surveys, and a high or very high radiation key issued at the site radiological control (RADCON) or Shift Manager’s Supervisors' office. All other less hazardous areas are properly identified in accordance with Table 12.1.2-1 with radiation work permits required when plant working guidelines for radiation dose may be approached.

A radiation work permit (RWP) is required for all work where employee doses are anticipated to exceed 50 mrem/day (deep dose equivalent). RWP's are required for contamination zones, airborne radioactivity areas, and when radiation systems are being breached. Personnel doses are tracked and each supervisor routinely informed. Personnel will be scheduled by their supervisor so that doses are in accordance with the ALARA objective.

RADCON coverage at the plant is provided as necessary in an effort to maintain radiation doses ALARA.

The general procedures have been formulated from various successful programs in use at other power reactor facilities and radioactive materials-handling facilities.

The working guidelines applied at the plant will result in radiation doses below 10 CFR 20 criteria and as such provide for a conservative approach toward assuring ALARA radiation doses.

The radiation monitors are used to enhance the radiological control program. The following statements describe the monitors and their intended use.

1. Portal monitors - The portal monitor is a radiation monitoring device for providing a visual and audible warning when radioactive contamination is detected on an individual. The monitor scans the entire body.

   The portal monitors are located at the exit from the Access Control Portal and in the plant at the exit from the auxiliary building.

2. Local rate meter radiation monitors (friskers) - The local ratemeter is a small compact count rate meter operated by ac line or by a rechargeable battery. Trickle charging occurs while the unit is plugged into the line. Battery condition may be checked on the control panel.

12.1.6 Estimates of Doses

Peak External Dose Rates

Peak external gamma dose rates for various access types during power operations are given in Table 12.1.6-1. Peak rates given are based on operation with 1.0 percent failed fuel.

Annual Doses

Personnel dose estimates are calculated annually for each fiscal year to establish site ALARA goals consistent with current industry practices and standards.

The following method is used to establish the annual personnel dose estimates. First, the work scope and the number of man-hours to be performed in each area of the plant is determined. Then by projecting radiation dose rates for these involved plant areas, an estimate is calculated by multiplying the number of hours in the area by the area dose rates. Historical dose data for similar work activities is also reviewed. By comparing the calculated and historical values, the personnel radiation dose for the upcoming fiscal year is estimated.

Non-emergency radiation doses to plant personnel are controlled by the requirements imposed by 10 CFR 20.

The remaining sections of FSAR subsection 12.1.6 describe personnel radiation dose estimates for plant maintenance and operational activities as calculated prior to plant operation, and are included for historical purposes only.

Estimates of yearly doses to plant nonmaintenance personnel are made by estimating the total time per year that plant personnel occupy access control areas as defined in Table 12.1.2-1. For this analysis, occupancy (man-hours/yr) in each type zone is multiplied by the estimated average dose rate (rem/hr) within the type zone to obtain the estimated man-rem/yr for occupancy in that type zone. The sum over all zone types is the estimated man-rem/yr for the Sequoyah Plant.

The estimates are based on a working time of 2000 hours per year for each person considered and as such includes the dose to these persons during one refueling and during minor maintenance that they may perform during the year. The estimates follow.

Access Type*	Occupancy (man-hours/yr)	Dose Rate, mrem/hr	Plant Dose man-rem/yr
Unlimited access - continuous occupancy	56,700 operators 20,000 others 76,700 total	0.1	5.67 operators 2.00 others 7.67 total
Unlimited access - intermittent occupancy	19,600 operators 23,775 others 43,375 total	1.0	19.60 operators 23.80 others 43.40 total
Regulated access - Radiation area	5,700 operators 2,225 others 7,925 total	15.0	85.50 operators 33.80 others 119.30 total
High radiation area (controlled)	120 operators 330 others 450 total	200	24 operators 66 others 90 total
High radiation area (restricted)	10 operators 20 others 30 total	1000	10 operators 20 others 30 total
Subtotal Subtotal	82,130 operators 46,350 others	All	144.77 operators 145.60 others
Grand Total	128,480 total		290.37 total

*Definitions are provided in Table 12.1.2-1.

As used in the above table, the category, "Operators," includes only the approximately 164 persons directly involved in plant operation. These persons are the manager supervisors, unit supervisors, unit operators, and assistant unit operators. The personnel category, "Others," are the other plant nonmaintenance personnel who will experience some radiation dose as a result of plant operation. These approximately 210 persons are radiological control, radiochemistry, and other technical support personnel.

As determined from the above table, the dose per year for "Operators" is 0.88 rem/yr per man and for "Others" is 0.69 rem/yr per man. If the total man-rem dose is averaged over the total nonmaintenance

staff of approximately 600 ("Operators," "Others," and "Administrative"), the average dose is 0.48 rem/yr per man. The doses given in the table are not expected during the early years of plant operation since they are based partly on the extreme condition of operation throughout the year with 1.0 percent failed fuel. However, they could be approached after a few years as plant activated corrosion product inventory increases.

Doses to the plant employees (approximately 700), whose primary duties are maintenance activities, are explained below. There is experience available from operating plants to serve as a guide for making such predictions. The experience available does suggest that such doses (to maintenance personnel) will be a significant fraction of 10 CFR 20 limits. A value of 0.5 rem/yr to 1.0 rem/yr per maintenance man is a reasonable expectation. With increasing plant age, this dose will increase due to accumulation of corrosion product activities on process surfaces and due to increasing plant maintenance requirements.

The estimates made for yearly man-rem dose are consistent with data reported from operating PWR power plants.

12.1.7 References

1. 10 CFR 50.59 Safety Evaluation for FSAR Chapter 12 Change Request 13-V12.

2. Reactor Shielding Design Manual, Theodore Rockwell III, D. Van Nostrund Company, Incorporated, New York, New York, 1956.

3. Communication from Westinghouse Electric Corporation, TVA-87-776.

4. Deleted

5. Deleted

6. Deleted

7. Deleted

8. D. H. Charlesworth, "Water Reactor Plant Contamination and Decontamination Requirements - A Survey," conducted by the Sub- committee on Nuclear Systems, ASME Research Committee on Boiler Feedwater Studies, paper prepared for presentation at the 33rd Annual Meeting of the American Power Conference, 1971.

9. SQS2-0216, “Old Steam Generator Storage Facility Dose Assessment.”

10. NDQ00200020100242, Unit 2 Old Steam Generator Storage Facility Dose Assessment and OSG Drop Considerations.

Table 12.1.2-1

ACCESS CONTROL AREAS

Area Type	Exposure** Rate, mrem/hr at 30 cm	Identification and Entry Requirements
Unlimited	<2.0	None
Regulated access	***	Note 1
Radiation area	5.0-100	Note 2
High radiation area (controlled)	100-1000	Note 3
High radiation area (restricted)	>1000	Note 4
Very High radiation area (restricted)	>500 rad/hr*	Note 5

*At very high doses received at high dose rates, units of absorbed dose (rad) are appropriate, rather than units of dose equivalent (rem).

** As specified in 10 CFR 20 and TECH SPEC 5.7.

*** Not defined by Exposure Rate. This area includes all areas where any type of radiological control is implemented.

Notes:

1. Access is under administrative control. The area is conspicuously posted with a sign or signs bearing the radiation symbol and the words CAUTION, RADIOLOGICALLY CONTROLLED AREA.

2. Access is under administrative control. The area is conspicuously posted with a sign or signs bearing the radiation symbol and the words CAUTION, RADIATION AREA. Radiation Work Permit (RWP) required if expected dose is ≥50 mem/day.

3. Access is under administrative control. The area is conspicuously posted with a sign or signs bearing the radiation symbol and the words DANGER, HIGH RADIATION AREA or CAUTION, HIGH RADIATION AREA. RWP is required. Radcon surveillance or radiation monitoring device is required.

4. Same as Note 3 above. Additionally, each entry will have a solid or wire mesh door which is maintained locked except when access to the area is required. The door can always be opened from the inside.

5. Entry will generally be forbidden unless there is a sound operational or safety reason for such an entry. The area is conspicuously posted with a sign or signs bearing the radiation symbol and the words GRAVE DANGER, VERY HIGH RADIATION AREA.

SQN-20

TABLE 12.1.4-1*

LOCATION OF PLANT AREA MONITORS

Monitor	Location Building & Elevation	Building Coord	Area	Range**	Type of Detector
1-RE-90-1	Aux bldg, El 734.0	w-x-A5	Spent fuel pit area	10^{-1} to 10^{4}	Geiger-Mueller Tube
0-RE-90-5	Aux bldg, El 714.0	w-A9	Spent fuel pit pump area	10^{-1} to 10^{4}	Geiger-Mueller Tube
1-RE-90-6	Aux bldg, El 714.0	s-A5	Comp clg ht exch area	10^{-1} to 10^{4}	Geiger-Mueller Tube
1-RE-90-7	Aux bldg, El 690.0	w-A5	Sample rm	10^{-1} to 10^{4}	Geiger-Mueller Tube
1-RE-90-8	Aux bldg, El 690.0	t-A4	Aux FW pumps area	10^{-1} to 10^{4}	Geiger-Mueller Tube
0-RE-90-9	Aux bldg, El 669.0	w-A8	Waste evap cnds tk area	10^{-1} to 10^{4}	Geiger-Mueller Tube
1-RE-90-10	Aux bldg, El 669.0	t-A4	CVCS bd area	10^{-1} to 10^{4}	Geiger-Mueller Tube
0-RE-90-11	Aux bldg, El 653.0	u-A7	Cntmt spray & RHR pump area	10^{-1} to 10^{4}	Geiger-Mueller Tube
1-RE-90-60	Reac bldg,(U1), El 733	225°	Upper compt	10^{-1} to 10^{4}	Geiger-Mueller Tube
1-RE-90-59	Reac bldg,(U1), El 733	315°	Upper compt	10^{-1} to 10^{4}	Geiger-Mueller Tube
1-RE-90-280	Aux bldg,(U1), El 706	x-A5	Post accident sample area	10^{-1} to 10^{4}	Geiger-Mueller Tube
1-RE-90-61	Reac bldg, instr rm (U1), El 713	88°	lower compt	10^{-1} to 10^{4}	Geiger-Mueller Tube
2-RE-90-1	Aux bldg, El 734.0	w-x-A11	Spent fuel pit area	10^{-1} to 10^{4}	Geiger-Mueller Tube
2-RE-90-6	Aux bldg, El 714.0	s-A11	Comp clg ht exch area	10^{-1} to 10^{4}	Geiger-Mueller Tube
2-RE-90-7	Aux bldg, El 690.0	w-A10	Sample rm	10^{-1} to 10^{4}	Geiger-Mueller Tube
2-RE-90-8	Aux bldg, El 690.0	t-A12	Aux FW pumps area	10^{-1} to 10^{4}	Geiger-Mueller Tube
2-RE-90-10	Aux bldg, El 669.0	t-A12	CVCS bd area	10^{-1} to 10^{4}	Geiger-Mueller Tube
2-RE-90-60	Reac bldg,U2,El 733	225°	Upper compt	10^{-1} to 10^{4}	Geiger-Mueller Tube
2-RE-90-59	Reac bldg,U2, El 733	315°	Upper compt	10^{-1} to 10^{4}	Geiger-Mueller Tube
2-RE-90-61	Reac bldg, instr rm El 713, (U2)	88°	Lower compt	10^{-1} to 10^{4}	Geiger-Mueller Tube
0-RE-90-135	Cntl bldg, MCR, El 732	q-C7	Main cntl rm rad mon	10^{-1} to 10^{4}	Geiger-Mueller Tube
2-RE-90-280	Aux bldg, (U2), El 706	X-A11	Post accident sample area	10^{-1} to 10^{4}	Geiger-Mueller Tube
0-RE-90-230	Con DI bldg, El 685	Dc-D4	Cond. demin. area	10^{-1} to 10^{4}	Geiger-Mueller Tube
0-RE-90-231	Con DI bldg,El 706	Dc-D5	Cond. demin. area	10^{-1} to 10^{4}	Geiger-Mueller Tube

*Containment high range area type monitors appear in Table 12.2.4-2 since their function is to detect airborne radioactivity concentrations during accident conditions.
**Units in mrem/hr.

TABLE 12.1.6-1

PEAK EXTERNAL DOSE RATES

Typical Areas	Peak External Dose Rate, mrem/hr
Exclusion boundary	Natural background
Control room	0.1
Turbine building (most areas)	0.1
Auxiliary building (most general passageways)	1.0
Some valve operating locations	5.0
Floor above spent fuel pool during refueling	2.5
Sample rooms	50
Containment instrumentation rooms	25
Containment (outside primary coolant system shielding except opposite penetrations in this shielding)	100
Inside some process equipment shielded	1000

There are numerous shielded plant areas where dose rates can be over 1.0 rem/hr. Although there are no absolute limits on peak dose rates where personnel are permitted (Subsection 12.1.1), administrative dose controls limit such access. Entry into areas such as those inside the primary coolant system shielding, where dose rates are as high as 30 rad/hr* to 50 rad/hr*, can be permitted to perform critical maintenance activities or in emergencies.

* At very high doses received at high dose rates, units of absorbed dose (rad) are appropriate, rather than units of dose equivalent (rem).

12.2 VENTILATION

The plant ventilation systems maintain a suitable environment for personnel and equipment during normal operation, including anticipated operational occurrences. Several of the plant ventilation systems perform safety-related functions.

12.2.1 Design Objectives

The design objectives of the plant ventilation systems with respect to the requirements of 10 CFR parts, 20, 50, and 100 are the following:

1. During normal operation, including anticipated operational occurrences, control airborne activity concentrations so that the average concentrations to which any plant staff individual is exposed will not exceed the maximum airborne radioactive material concentrations given in 10 CFR 20.

2. During accident conditions, reduce released airborne activity to limit the offsite dose from airborne activity and all other sources to within the requirements in 10 CFR 100.

3. Prevent doses from airborne activity in the control room and penetrating radiations through walls under accident conditions from exceeding the limits of 10 CFR 50, Appendix A, Criterion 19.

12.2.2 Design Description

The following subsections present descriptions of the Containment, Auxiliary, Control, and Turbine Buildings ventilation systems expected to contain radioactive material or which may become contaminated with radioactive material (see Section 11.3.7 for other areas with radioactive material). The descriptions include the design criteria and pertinent ventilation system and building parameters. Additional description is provided in Section 9.4.

12.2.2.1 Containment Ventilation Systems

The Containment Ventilation Systems are described in detail in Subsection 9.4.7, 9.4.8 and Subsection 6.2.3. These systems are:

1. Containment Purge Supply and Exhaust Systems.

2. Instrument Room Purge Supply and Exhaust Systems.

3. Emergency Gas Treatment System.

4. Containment Cooling Systems.

The containment volumes, in cubic feet are:

a. Lower compartment: 367,600

b. Upper compartment: 716,000

c. Total volume: 1,083,600

The Containment Purge Supply and Exhaust System provides the capability with only one of two trains, to purge the containment lower compartment, upper compartment, instrumentation room, and annulus individually. The purge exhaust is routed through particulate filters and the charcoal adsorbers of the Containment Purge Air Exhaust-Filtration System located in the Auxiliary Building. The system contains two 50 percent capacity exhaust fans and filter trains. In addition, an exhaust fan, 100 percent capacity, is connected to one of the filter trains for operation of the Instrumentation Room Purge System. A separate supply fan is also provided for the independent purge of the instrumentation room.

The upper and lower compartments of the containment are also provided with air coolers. These coolers will remove moisture from containment air including any radioactivity which has adhered to or dissolved in the water vapor in the containment atmosphere.

12.2.2.2 Auxiliary Building Ventilation System

The Auxiliary Building Ventilation System is described in detail in Subsection 9.4.2. The Auxiliary Building services the two reactor units with identical sets of equipment arranged symmetrically within the building. The spent fuel area is common to both units. Air supply fans are located on each end of the building. Those at each end supply half of the required general building ventilation air. Each air intake also delivers nominally half of the air supply to the fuel handling area. The auxiliary shutdown board rooms, located in the Auxiliary Building, are separated from the remainder of the building and have independent cooling systems.

The building ventilation system is designed to maintain a low level of airborne activity in most general areas within the building. The building supply air is delivered to relatively cleaner areas and exhausted from areas of potentially higher airborne radioactivity levels. When high radiation is detected by monitors in the exhaust vent or an Auxiliary Building isolation signal is obtained, the normal ventilating system is automatically stopped and the building is automatically isolated. A negative pressure is then created by the Auxiliary Building Gas Treatment System. Air exhausted in this mode is equivalent to the building in-leakage. Before this air mass is released through one of the Shield Building exhaust vents, it is passed through HEPA filters and charcoal adsorbers.

The Auxiliary Building general volume is 3,480,000 cubic feet. The fuel handling and radwaste packaging area volume is 1,012,900 cubic feet.

12.2.2.3 Turbine Building Ventilation System

The Turbine Building Ventilation Systems are described in detail in Subsection 9.4.4. No radioactive particulate or halogen cleanup systems are included in the ventilation system design, since airborne radioactive contamination can occur only when secondary system leakage occurs simultaneously with steam generator tube leaks.

The Ventilation System supplies air from several locations. Most of the air is supplied through air-intake hoods on the building roof at elevation 797. In addition, an air supply housing at

elevation 732 on the west side of the building supplies some of the air. The Turbine Building volume is approximately 8,000,000 cubic feet.

12.2.2.4 Control Room Ventilation System

The Control Room Ventilation System is provided with equipment for a normal and an emergency mode of operation. The Ventilation System is fully described in Subsection 9.4.1.

Under the normal mode of operation fresh make-up air is mixed with the return air, filtered, and supplied to the control room by air cooling units. All of the air is filtered before going through the coolers.

The equipment for emergency operation consists of isolation dampers on the normal control room supply and exhaust ducts, and two 100 percent capacity emergency pressurizing fans which provide outside air for maintaining a slight positive pressure to two 100 percent capacity filter and fan trains for filtration of the small amount of outside air mixed with the return air for cleanup of control room air. The air cleanup filter trains consist of a bank of four HEPA filters mounted in series with a bank of adsorber modules. For rated efficiency of the filters and adsorbers, see Subsection 9.4.1.3.

In the event of a safety injection signal and/or high radiation signal from either of the two beta radiation monitors located in the common intake duct, the control room supply and exhaust isolation dampers will be automatically closed and a portion of the recirculated air together with the small flow of outside air will be automatically routed to the fully redundant emergency air cleanup fans and filter trains.

The Control Room volume is 260,000 cubic feet.

The capability of the Control Room Ventilation System to meet NRC General Design Criterion 19 and the inhalation dose limit has been evaluated and is presented in Chapter 15.

12.2.3 Source Terms

Radiation analyses utilized for normal plant operations and post-accident conditions are described in FSAR Chapters 11-1 and 15.5, respectively. These radiation analyses are summarized in SQN-DC-V-21.0, FSAR Reference 15.5.8.17.

12.2.4 Airborne Radioactivity Monitoring

12.2.4.1 Fixed Airborne Radioactivity Monitoring Systems

12.2.4.1.1 Design Basis

The airborne radioactivity monitoring systems are one of the plant features provided to comply with 10 CFR 50, Appendix A, General Design Criteria 64, 10 CFR 20, and with 10CFR100.

The fixed airborne radioactivity monitoring system is supplemented by portable radiological control instrumentation that qualitatively responds to airborne radioactivity.

12.2.4.1.2 Airborne Monitoring Channels

Normal Conditions

The Containment Building upper and lower compartment monitors indicate, record, and annunciate airborne radioactivity levels in the MCR (See Table 12.2.4-3). The normal range particulate monitor utilizes a beta scintillation detector with a filter collector to collect the particles from the air. The noble gas channel also uses a beta scintillation detector. These normal range monitor assemblies consist of sample pumps, detector assemblies with preamplifiers, indicators, and other instrumentation. The upper compartment monitors are identified as RE-90-112A, B for the particulate and noble gas channels while the lower compartment is identified as RE-90-106A, B respectively. Redundant isolation valves are provided on the intake and discharge lines for containment isolation. Additionally, these monitors serve as leakage detection devices (see Section 5.2.7). Details on these monitors are listed in Table 12.2.4-1 and Table 12.2.4-3. The filter transport mechanism can be operated in the continuous advance mode or programmed for step advance.

As described in Section 11.4, the safety function of containment ventilation isolation on detection of high radiation is served by the containment purge exhaust monitors.

Accident Conditions

The accident range monitors for the upper compartment are designated as RE-90-271, 272 on trains A and B, respectively. The accident range monitors for the lower compartment are designated as RE-90-273, 274, on trains A, and B, respectively. These are area (type) monitors and are listed in Table 12.2.4-2 and Table 12.2.4-3.

12.2.4.1.3 Component Descriptions

Detectors

The non-area type detector units employ scintillation detectors and built-in preamplifiers (RE-90-106 and -112).

Area type monitors employ ion chambers (RE-90-271 through -274).

Alarms

Alarms are provided for high radiation, signal failure, flow failure, and power failure as applicable. The alarms are both visual and audible in main control room on high radiation and instrument malfunction. One annunciator window for high radiation and one window for instrument malfunction are provided for the area type monitors (RE-90-271 through -274). One annunicator window for particulate channel instrument malfunction, one window for gas channel instrument malfunction, and one common window for particulate/gas channel high radiation are provided for the non-area type monitors (RE-90-106 and -112).

Multipoint Recorder (0-M-12 and M-31)

The monitor outputs are recorded on multi-point recorders located in the main control room. See Table 12.2.4-3.

Pumping System

For those airborne monitors using a pumping system, the pump is a positive displacement, dry vane type. A flow indicator is also provided.

Visual flow alarms are provided at the enclosure.

12.2.4.1.4 Sensitivity, Range, and Set Point

Tables 12.2.4-1 and 12.2.4-2 provide sensitivity range information. Monitor channel setpoints are determined in accordance with plant procedures.

12.2.4.1.5 Calibration and Maintenance

Channel checks, channel operational tests, and channel calibrations of the airborne monitors are performed in accordance with Technical Specifications or maintenance instructions as appropriate.

Maintenance will be performed if any of the above checks indicate a malfunction. Unscheduled maintenance will be performed as required.

12.2.4.2 Airborne Radioactivity Measurements by Laboratory Analysis of Collected Samples

The program for monitoring airborne radioactivity concentrations in plant air spaces with the real time detection devices described in Subsection 12.2.4.1 is supplemented with the use of a low volume portable sampler. A charcoal cartridge or charcoal impregnated paper can be used with the sampler to collect iodine. Collected samples are analyzed in the laboratory.

12.2.5 Operating Procedures

Plant instructions and administrative controls are designed to maintain inhalation doses resulting from airborne radioactivity within site ALARA goals and within the limits of 10 CFR 20 during normal operation. An airborne radioactivity area is posted and access controlled in accordance with 10 CFR 20. Entry into these areas requires the issuance of a radiation work permit. Air samples are analyzed to determine radionuclide concentrations to assure that appropriate respiratory protection equipment is specified on the radiation work permit.

Entry and exit are made through specified portals and all personnel and equipment are monitored for radioactive contamination upon exit from the area.

The respiratory protection program is organized to conform to the standards of 10 CFR 20 to assure the effectiveness of respiratory protection equipment. Training of personnel in respiratory fit tests and maintenance of equipment is an integral part of this program.

In order to evaluate the effectiveness of the respiratory protection program, whole body counting and bioassay analysis will be performed on a routine or requested basis.

These general procedures have been formulated from various successful programs in use at other power reactor and radioactive materials-handling facilities. The 10 CFR 20 airborne radioactivity limit routinely applied within the plant is based on "unidentified" radionuclides commonly present in the reactor environment, thus establishing the respiratory protection program on a conservative basis. This approach is an effort toward maintaining inhalation doses ALARA.

12.2.6 Estimates of Doses

The estimated average dose rates are given in Table 12.2.6-1. The table also considers maximum expected dose rates.

12.2.7 References

1. 10 CFR 50.59 Safety Evaluation for FSAR Chapter 12 Change Request 13-V12.

TABLE 12.2.4-1 **

FIXED AIRBORNE ACTIVITY MONITORING CHANNELS
(Normal Conditions)

Monitor	TVA Instrument No.	Quantity	Detector Seismic Class	Detector Location Elevation	Detector Location Building	Detector Type	Background* mR/hr.	Nuclide	Demonstrated Range* Min. Det. Conc. µCi/cc	Demonstrated Range* Max. Det. Conc. µCi/cc
Containment Building Lower Compartment	1-RE-90-106A	2/plant	1	714	Auxiliary	Beta Scint	10.0	Co-60	9.44 E-11	5.52 E-5
	1-RE-90-106B	2 Channels				Beta Scint		Total Gas	5.32 E-7	2.43 E-1***
	2-RE-90-106A									
	2-RE-90-106B									
Containment Building Upper Compartment	1-RE-90-112A	2/plant	1	714	Auxiliary	Beta Scint.	10.0	Co-60	1.93 E-10	1.38 E-5
	1-RE-90-112B	2 Channels				Beta Scint.		Total Gas	1.01 E-6	2.74 E-1***
	2-RE-90-112A									
	2-RE-90-112B									

* The minimum detectable concentration is determined at the above Background. The actual demonstrated range encompasses the minimum and maximum detectable concentration values shown in the table.
** Accuracy Analysis performed by NE Calculation SQN APS3-100.
*** Units are µCi/cc

TABLE 12.2.4-2

FIXED AIRBORNE ACTIVITY MONITORING CHANNELS
(Accident Conditions)

Monitor	TVA Instrument No.	Quantity	Seismic Class	Location Elevation	Location Building	Detector Type	Range
Lower Compartment Accident Range	1-RE-90-273,274 2-RE-90-273,274	4/Plant	1	706.5	Reactor	Ion Chamber	10^0 to 10^8 R/Hr
Upper Compartment Accident Range	1-RE-90-271,272 2-RE-90-271,272	4/Plant	1	785	Reactor	Ion Chamber	10^0 to 10^8 R/Hr

TABLE 12.2.4-3

MONITOR READOUTS

Fixed Airborne Monitor	Instrument Number	Local Panel			MCR Panel			Comments
		Ind	Rec	Ann	Ind	Rec	Ann	
Containment Building Upper Compartment								
Normal Range Particulate	1-RE-90-112A 2-RE-90-112A	_	_	_	M-12	M-12(1)	M-12	Non-Divisional
Normal Range Noble Gas	1-RE-90-112B 2-RE-90-112B	X	_	X	M-12	M-12(1)	M-12	Remote Indicator/Alarm Panel Located at Personnel Air Lock Non-Divisional
Accident Range	1-RE-90-271 2-RE-90-271	_	_	_	M-30	M-3 1(1)	M-30	Train A
Accident Range	1-RE-90-272 2-RE-90-272	_	_	_	M-20	M-31(1)	M-30	Train B
Containment Building Lower Compartment								
Normal Range Particulate	1-RE-90-106A 2-RE-90-106A	_	_	_	M-12	M-12(1)	M-12	Non-Divisional Measurement Range = 10 - 10^7 cpm
Normal Range Noble Gas	1-RE-90-106B 2-RE-90-106B	X	_	X	M-12	M-12(1)	M-12	Remote Indicator/Alarm Panel Located at Personnel Air Lock Non-Divisional
Accident Range	1-RE-90-273 2-RE-90-273	_	_	_	M-30	M-31(1)	M-30	Train A
Accident Range	1-RE-90-274 2-RE-90-274	_	_	_	M-30	M-31(1)	M-30	Train B

Notes for Table 12.2.4-3:
(1) Entered in plant computer.

TABLE 12.2.6-1

ESTIMATED DOSES FOR EXPECTED ACTIVITY LEVELS IN VARIOUS BUILDINGS[1]

Area	Dose Rate[2] (mrem/hr)*
Containment Lower Compartment[3]	18.2
Instrumentation Room[4]	9.8
Auxiliary Building[5]	.035
Turbine Building	4×10^{-5}

Notes:

(1) Doses from maximum activity levels will be higher by approximately a factor of 40 based on an increase in failed fuel from 0.25 percent to 1 percent, and leakage rate increase factor of 10.

(2) All dose rates based on an equivalent 5 rem/2000 hours at MPC.

(3) After 90 day operation, 16 hours cleanup, 2 hours purge.

(4) Based on concentration in containment lower compartment prior to cleanup or purge, and P.F. = 100 due to purge prior to entry.

(5) Average MPC shown in Table 12.2.2-1 reduced by a factor of 10 to account for nonuniformity of concentration due to air flow from regions of lower contamination to regions of higher contamination.

*Calculated values shown are based on 10 CFR 20 concentrations prior to January 1, 1994.

12.3 RADIOLOGICAL CONTROL PROGRAM

12.3.1 Program Objectives

The Radiological Control (RADCON) Program policy is described in the TVA Nuclear Radiation Protection Plan (RPP). The Sequoyah Nuclear Plant site is responsible for implementing the site portion of the RPP.

The site Senior Manager Radiation Protection is responsible for direction of the radiological control surveillance program for plant operations involving potential radiation hazards. He keeps the plant manager informed of radiation hazards and conditions related to potential dose, contamination of the plant and its equipment, or contamination of site and environs. His duties include training and supervising RADCON technicians; planning and scheduling monitoring and surveillance services; implementation of the site personnel dosimetry programs; scheduling technicians to ensure around-the-clock shift coverage as required; maintaining current data files on radiation levels, contamination levels, personnel doses; and work restrictions. The site RADCON section monitors plant operations to ensure that the provisions of developed RADCON standards and procedures are not violated. The site Senior Manager Radiation Protection provides assistance and advice to the plant manager during radiological emergencies.

12.3.2 Facilities and Equipment

The Site RADCON facilities consist of space in the Office Building for the site Senior Manager Radiation Protection. The RADCON laboratory is located at the main boundary between the clean and controlled access areas in the Service Building at elevation 690 near the Auxiliary Building entrance. Portable and laboratory radiation monitoring instruments, respiratory protection, and other supplies including signs, personnel decontamination supplies, air sampling equipment, etc., will be kept in designated areas.

The portable and laboratory equipment will allow the RADCON personnel to measure dose rates and contamination levels throughout the plant in routine and emergency situations.

Each portable survey instrument will be calibrated and checked with standard radioactive sources at least annually (including instruments used exclusively for training purposes). Accurate records on the performance of each instrument during each calibration will be maintained at the appropriate laboratory. Calibration and maintenance procedures specific for each instrument are written and routinely used. Each laboratory counting system is checked at regular intervals with standard radioactive sources for proper counting efficiencies, background count rates, and high-voltage settings by RADCON personnel at the plant.

Personnel decontamination facilities are located on elevation 690.0. This facility is equipped with a shower, sink, and the necessary radiation monitoring instruments to adequately detect very low levels of radioactive contamination. The floor drain from the facility is piped to the Liquid Radwaste System for processing.

TVA will provide protective clothing and equipment for personnel working in radiological areas. Clothing required for a particular instance shall be prescribed by RADCON based upon the actual or potential radiological conditions.

12.3.3 Personnel Dosimetry

National Voluntary Laboratory Accreditation Program (NVLAP) accredited external dosimetry service is provided by TVA for personnel exposed to ionizing radiation in accordance with the requirements of 10 CFR 20. Dosimetry processing and evaluation is performed by an organization currently accredited by the NVLAP of the National Institute of Standards and Technology for the type or types of radiation that most closely approximates the type of radiation or radiations for which the individual wearing the dosimeter is monitored.

The Radiation Protection section has whole body counters to determine internal deposition of gamma-emitting radionuclides. The frequency of the counts will be determined for each individual, and it will be dependent upon the work environment for this individual. The counters will be calibrated with standard radioisotope solutions in configurations approximating the human body.

Data obtained from the whole body counter may be supplemented by in-vitro sampling. The necessity of in-vitro sampling will be dependent upon the work environment for that individual. In-vitro analyses and whole body counter data will be maintained as a part of the employee's permanent dose record.

12.4 LEAKAGE REDUCTION PROGRAM

In response to NUREG-0578, paragraph 2.1.6.a, a program has been implemented to identify and reduce leakage from systems outside containment which would or could contain highly radioactive fluids during a serious transient or accident to as-low-as practical levels.

12.4.1 Waste Gas System

The waste gas system was pressurized, leak tested, and all external leaks repaired as of June 1980. Identification of gaseous leakage during operation is accomplished in response to any alarm from area radiation detectors and/or the waste gas effluent radiation monitor.

12.4.2 Liquid Systems

The following liquid systems are checked periodically to determine if any leakage to the auxiliary building exists:

1) Safety Injection
2) Containment Spray
3) Residual Heat Removal
4) Chemical and Volume Control
5) Liquid Post Accident Sampling System

Each train of each system is tested individually. A general description of the test is given below.

The boundaries of the system to be tested are identified by marked drawings, and the system is aligned to utilize system pumps for pressurizing the areas to be tested. A visual inspection is performed on the piping, valves, pumps, flanges, and fittings for any signs of external leakage. Table 12.4.2-1 contains some general items of inspection and inspection guidelines used. Items to be inspected are not limited to these general items. Each identified leak is quantified and its location specified and documented on data sheets. Steps are taken to repair any external leakage found. All data sheets from the most current test on each system are kept on file in the Main Control Room and are readily available during an emergency.

Each system, initially tested quarterly, will be tested at intervals not to exceed each refueling cycle.

Table 12.4.2-1

INSPECTIONS

1. Drain Valves, Vent Valves, and Root Valves

   a. Inspect blind flange (if required) for leakage. Initiate maintenance request if leakage is present. Estimate any leakage.

   b. If no blind flange is installed but a flange is required, initiate maintenance request.

   c. If no blind flange is provided for, estimate leakage, if any, and initiate maintenance request if leakage is present.

   d. Inspect valve for bonnet leakage, packing leakage, etc. Initiate maintenance request if leakage is present. Estimate leakage.

2. Orifice Flow Element

   a. Inspect flanges for leakage. Initiate maintenance request if leakage is present. Estimate any leakage.

   b. Inspect root valves if present, per (1).

3. Heat Exchangers and Tanks

   a. Inspect shell for possible leakage, particularly at welded sections. Initiate maintenance request if leakage is present. Estimate leakage.

   b. Inspect any bolted joints such as heads, inlet and outlet nozzles, manhole covers, vents, drains, etc. for leakage. Initiate maintenance request if leakage is present. Estimate leakage.

   c. Inspect floor around HX for any water accumulation. Initiate maintenance request if found. Estimate accumulation.

4. Large Valves (3" and up)

   a. Inspect for packing leakage, flange leakage, bonnet to body joints or body to bonnet pressure seal leakage. Initiate maintenance request if leakage present. Estimate leakage.

5. Pumps

   a. Inspect for excessive packing leakage. Initiate maintenance request if leakage is excessive. Estimate leakage. Note: Mechanical seals should have NO leakage)

   b. Inspect bolted joints such as casing flange, inlet and outlet, etc., for leakage. Initiate maintenance request if leakage is present. Estimate leakage.

6. Flanged Piping Connections

   a. Inspect for leakage. Initiate maintenance request if leakage is present. Estimate leakage.

TABLE OF CONTENTS

Section	Title	Page
13.0	CONDUCT OF OPERATIONS	
13.1	ORGANIZATIONAL STRUCTURE	13.1-1
13.1.1	CORPORATE ORGANIZATION	13.1-1
13.1.1.1	Functions, Responsibilities, and Authorities	13.1-1
13.1.1.2	Interrelationships with Contractors and Suppliers	13.1-1
13.1.2	NUCLEAR POWER	13.1-2
13.1.2.1	Offsite Organizations	13.1-2
13.1.2.2	Onsite Organization	13.1-2
13.1.2.3	Personnel Functions, Responsibilities and Authorities	13.1-2
13.1.3	QUALIFICATION REQUIREMENTS FOR NUCLEAR FACILITY PERSONNEL	13.1-2
13.1.4	QUALIFICATION RECORDS OF PLANT PERSONNEL	13.1-3
13.2	TRAINING PROGRAMS	13.2-1
13.2.1	ACCREDITED TRAINING PROGRAMS	13.2-1
13.2.2	GENERAL EMPLOYEE TRAINING PROGRAM	13.2-1
13.2.3	OTHER TRAINING PROGRAMS	13.2-1
13.2.4	REFERENCES	13.2-1
13.3	EMERGENCY PLANNING	13.3-1
13.4	REVIEW AND AUDIT	13.4-1
13.4.1	ONSITE REVIEW	13.4-1
13.4.2	INDEPENDENT REVIEW	13.4-1
13.4.3	AUDIT PROGRAM	13.4-1
13.4.4	REFERENCES	13.4-1
13.5	SITE INSTRUCTIONS AND SECTION INSTRUCTION LETTERS	13.5-1
13.5.1	SYSTEM OF SITE INSTRUCTIONS	13.5-1
13.5.1.1	Administrative Procedures	13.5-1
13.5.1.2	Operating Instructions and Procedures	13.5-1
13.5.1.3	Maintenance Instructions	13.5-3
13.5.1.4	Surveillance Instructions	13.5-3
13.5.1.5	Technical Instructions	13.5-3
13.5.1.6	Radiation Control Instructions	13.5-4
13.5.1.7	Special Test Instructions	13.5-4

TABLE OF CONTENTS

Section	Title	Page
13.5.1.8	Radiological Emergency Plan (REP) Implementing Procedures	13.5-4
13.5.1.9	Vendor or Contractor Instructions	13.5-4
13.5.1.10	Radwaste Handling & Shipping	13.5-4
13.5.1.11	Floor Preparation Instructions	13.5-4
13.5.1.12	Restart Test Instructions	13.5-4
13.5.1.13	Modifications and Additions Instructions	13.5-4
13.5.1.14	Physical Security Instructions/Standard Programs and Processes	13.5-4
13.5.1.15	Periodic Instructions	13.5-5
13.5.2	SAFETY AND HEALTH MANUAL	13.5-5
13.5.3	SECTION INSTRUCTION, MANUALS OR EQUIVALENT	13.5-5
13.6	PLANT RECORDS	13.6-1
13.6.1	PLANT HISTORY	13.6-1
13.6.2	OPERATING RECORDS	13.6-1
13.6.3	EVENT RECORDS	13.6-1
13.7	NUCLEAR SECURITY	13.7-1
13.7.1	PERSONNEL AND PLANT DESIGN	13.7-1
13.8	TECHNICAL REQUIREMENTS MANUAL	13.8-1
13.9	LICENSE RENEWAL PROGRAM	13.9-1

LIST OF FIGURES

Number	Title
13.5.1-1	Sequoyah's System of Written Instructions or Procedures

13.0 CONDUCT OF OPERATIONS

13.1 ORGANIZATIONAL STRUCTURE

13.1.1 Corporate Organization

The organization of the Tennessee Valley Authority's Nuclear Power Organization including the Sequoyah Nuclear Plant is presented in Tennessee Valley Authority Topical Report TVA-NPOD89-A, Nuclear Power Organization Description.

13.1.1.1 Functions, Responsibilities, and Authorities

Sequoyah Nuclear Plant's two nuclear steam supply systems were supplied by Westinghouse Electric Corporation. The TVA Nuclear Engineering organization served as the plant architect, engineer, and principal contractor for the balance of plant equipment and was responsible for ensuring that the technical requirements of the nuclear steam supply system contracts were met. The TVA Nuclear Construction organization was responsible for constructing the plant in accordance with design specifications supplied by the Nuclear Engineering organization.

TVA Nuclear Power is responsible for the safe operation and maintenance of the plant in compliance with the operating licenses, technical specifications, and other applicable requirements.

Nuclear Power is responsible for preoperational and startup testing programs as discussed in Chapter 14.

Chapter 17 and the TVA Nuclear Quality Assurance Plan, TVA-NQA-PLN89-A, describes the quality assurance plan developed for the design, construction, and operation of Sequoyah for both TVA and Westinghouse. Quality assurance of components that were built and supplied by Westinghouse is the responsibility of Westinghouse. Quality assurance for TVA supplied components and designs is the responsibility of TVA. Quality assurance programs for plant operations are also the responsibility of TVA and are audited by the Nuclear Assurance organization.

13.1.1.2 Interrelationships With Contractors and Suppliers

TVA had overall responsibility for planning, scheduling, carrying out, and documenting the plant startup programs. All aspects of plant startup conform to the requirements of the Nuclear quality assurance program. Initial tests and operations are discussed in detail in Chapter 14.

Westinghouse assisted by providing technical guidance in support of the following operations:

1. The storage, protection, installation, cleaning, initial calibration, testing, and operation of the nuclear system equipment, instrumentation and material supplied by Westinghouse.

2. The preoperational testing of the nuclear plant systems in which Westinghouse supplied equipment as installed. This includes the right of review and comment on the preoperational testing of all plant systems that are related to the safety and performance of the nuclear system.

3. All operational checkouts and startup testing of the nuclear system, the initial fuel loading and startup to the completion of the warranty demonstration test.

4. The onsite training of TVA personnel during the nuclear systems preoperational testing, initial fuel loading, and startup activities.

5. Fuel management services as part of the initial long-term fuel contact.

13.1.2 Nuclear Power

Nuclear Power (NP) is responsible for the safe design, construction, operation, and modification of TVA nuclear plants; for compliance with TVA policy on safety and quality; and for compliance with regulatory requirements as applicable to all activities. Nuclear Power plans and manages the nuclear energy supply programs to meet the requirements of the TVA power program consistent with safety, environmental, quality and economic objectives. It develops and implements policies, programs and plans for the nuclear power program.

13.1.2.1 Offsite Organizations

The Nuclear Power Organization is presented in Tennessee Valley Authority Topical Report, TVA-NPOD89-A, Nuclear Power Organization Description.

Qualification requirements for positions providing corporate technical support, specifying required education and experience are maintained in approved position descriptions on file at the site and central office by the Nuclear Human Resources organization. Numbers of positions are contained in approved staffing plans also maintained by the Nuclear Human Resources organization.

13.1.2.2 Onsite Organization

The Sequoyah Nuclear Plant organization is presented in Tennessee Valley Authority Topical Report, TVA-NPOD89-A Nuclear Power Organization Description.

13.1.2.3 Personnel Functions, Responsibilities, and Authorities

During normal plant operations, the plant manager is responsible for all plant activities. In the event of absence, incapacitation of personnel, or other emergencies, the plant manager shall delegate in writing the succession to this responsibility in accordance with Technical Specification 5.1.1.

13.1.3 Qualification Requirements for Nuclear Facility Personnel

Nuclear Power (NP) personnel at the Sequoyah Nuclear Plant are required to meet or exceed the minimum qualifications referenced for comparable positions in Regulatory Guide 1.8, Revision 2 (April 1987), as stipulated in the TVA Nuclear Quality Assurance plan (TVA-NQA-PLN89-A). Regulatory Guide 1.8, Revision 2, endorses ANSI N18.1-1971 and ANSI/ANS 3.1-1981. Minimum qualification requirements are detailed in Site Administrative Procedures.

Below are various onsite and offsite positions correlated to ANSI N18.1.1971 and ANSI/ANS 3.1-1981 positions as appropriate. Site positions will meet or exceed these requirements at a minimum.

TVA Position Title	ANSI N18.1-1971 Position Titles
Plant Manager	Plant Managers
Director Maintenance	Maintenance Manager
Director Site Engineering	Engineer in charge
Senior Manager Systems Engineering	Technical Manager
Superintendent Operations	Operations Manager

TVA Position Title	ANSI N18.1-1971 Position Titles
Senior Manager Chemistry	Radiochemistry
Director Work Management	Maintenance Manager (Need not have non-destructive testing familiarity, craft knowledge, or complete understanding of electrical, pressure vessel, and piping codes and standards)
Assistant Unit Operator	Operators (Unlicensed)
Manager Reactor Engineering	Reactor Engineering & Physics
Superintendent Instrument & Controls Manager	Instrumentation & Control
Instrument Mechanics, Chemistry & Radiological Techicians, Health PhysicsTechnicians	Technicians
Craftsman (Mechanist, Electrician, Steamfitter, Boilermaker)	Repairmen
Offsite Supervisory Personnel	Staff Specialists
	ANSI/ANS 3.1-1981
Senior Manager Radiation Protection	Radiation Protection
Shift Technical Advisor*	Shift Technical Advisor
Shift Manager	Shift Supervisor
Unit Supervisor	Senior Operator
Unit Operator	Licensed Operator

13.1.4 Qualification Records of Plant Personnel

The qualifications of key plant personnel are maintained on site and are available for NRC inspection.

* An on-duty SRO, as required by 10CFR50.54(M)(2)(i), may serve as the individual that will provide the technical expertise on shift. The on-duty SRO shall meet the qualifications specified by the Commission Policy Statement on engineering expertise on shift.

13.2 TRAINING PROGRAMS

13.2.1 Accredited Training Programs

The Sequoyah Nuclear Plant (SNP) training programs have been developed in accordance with the Systems Approach to Training as described by the Institute for Nuclear Power Operations (INPO). The National Academy for Nuclear Training, through a formal accreditation process, verifies that SNP training programs meet the established criteria. SNP is a branch of the National Academy and has achieved accreditation of the following programs:

Non-licensed operator
Reactor operator
Senior reactor operator
Continuing training for licensed personnel
Shift manager
Shift technical advisor
Instrument and control mechanics
Electrical maintenance craftsmen
Mechanical maintenance personnel and supervisor
Radiological protection technician
Chemistry technician
Engineering support personnel

The training programs are periodically evaluated and revised as appropriate, and reviewed by management for effectiveness. Revisions are made as appropriate. Records are retained as necessary to support management information needs and to provide historical data.

13.2.2 General Employee Training Program

All persons regularly employed at SNP are trained in the following areas commensurate with their job duties:

Fitness for duty
General plant description
Job related procedures and instructions
Radiological protection
Emergency preparedness
Industrial safety
Fire protection
Security
Quality assurance

13.2.3 Other Training Programs

Responsible managers ensure that personnel performing quality-related activities receive indoctrination and training as necessary to ensure that adequate proficiency is achieved and maintained.

13.2.4 References

1. 10 CFR Part 55, Operator's Licenses
2. 10 CFR 50.120, Training and qualification of nuclear power plant personnel
3. Nuclear Quality Assurance Plan, TVA-NQA-PLN89-A

13.3 EMERGENCY PLANNING

The Radiological Emergency Plan (REP) has been developed to provide protective measures for TVA personnel and to protect the health and safety of the public in the event of a radiological emergency resulting from an accident at Sequoyah Nuclear Plant. This plan fulfills the requirements set forth in Part 50, Title 10 of the Code of Federal Regulations. The REP provides for the following:

1. Adequate measures to protect employees and the public.

2. Proper training for individuals having responsibilities during an accident.

3. Procedures to provide the capability to cope with a spectrum of accidents ranging from those of little consequence to major core melt.

4. Reference to equipment to detect, assess, and mitigate the consequences of such occurrences.

5. Emergency action levels and procedures to assist in making decisions.

The SQN emergency organization is such that broad functional areas are controlled from emergency centers located near the normal work areas. This is to ensure that the working staffs have the needed resources and are immediately available.

Specific information on TVA emergency centers is included in the REP and a site specific appendix. The appendix details facility features, capabilities, equipment, and responsibilities.

13.4 REVIEW AND AUDIT

13.4.1 Onsite Review

A continuing review of operational activities is a normal function of the plant staff. Two plant organizations, the Plant Operations Review Committee and the Nuclear Assurance (NA) Organization have specific responsibilities in the area of review of plant operation. A description of the NA Organization including their responsibility and authority is contained in Reference 2. In addition, the quorum requirements, meeting frequency, responsibility, authority, and record requirements of the Plant Operations Review Committee are contained in Reference 2.

13.4.2 Independent Review

Independent review of operational activities is the function of the TVA Nuclear Safety Review Board (NSRB). The NSRB reviews nuclear safety-related activities, programs, and events, including those required by plant technical specifications, to independently evaluate the safety of licensed TVA nuclear plants. Audits of activities identified in Reference 2 are performed under the cognizance of the NSRB. They advise the Chief Nuclear Officer on the nuclear safety significance of these reviews and audits and on the adequacy and implementation of TVA nuclear safety policies and programs. The NSRB consists of a chairman and members appointed by the Chief Nuclear Officer.

TVA internal procedures define the responsibility, authority, and method of operation of the NSRB. These procedures comply with the requirements of Reference 1.

13.4.3 Audit Program

The NA Organization is responsible for a system of planned and periodic audits of the nuclear plants and supporting organizations. Reference 2 describes the audit program and specific NA responsibilities. The audit program complies with the requirements of Reference 1 with the alternatives described by Reference 2.

13.4.4 References

1. "Administrative Controls and Quality Assurance for the Operational Phase of Nuclear Power Plants," ANSI-18.7-1976.

2. "Nuclear Quality Assurance Plan," TVA-NQA-PLN89-A.

13.5 SITE INSTRUCTIONS AND PROCEDURES

Instruction or procedure may be used interchangeably in 13.5.1.

13.5.1 System of Site Instructions and Procedures

Day-to-day operations are carried out by the various site sections. Each section, within its assigned area of responsibility, operates with some degree of independence and freedom from close supervision; yet their actions are closely coordinated to best achieve the common purpose. Written procedures are established, implemented, and maintained covering site activities as identified in Section 5.4 of the SQN Technical Specifications.

The Site Vice President or Plant Manager issues, in the form of administrative procedures, instructions governing employee actions and established standards for site or plant operation. Additionally, standard TVAN administrative procedures are issued by the Vice President Nuclear Support, which are applicable to all TVA plants. These instructions, written in accordance with ANSI N18.7-1976, contain administrative restrictions and station requirements established to ensure safe operation of the plant within the limits set by the facility licenses and technical specifications. They provide that plant activities will be conducted in a manner to protect the general public, site personnel, and equipment.

The formalized system of written instructions onsite conforms to the requirements of the TVA Nuclear Quality Assurance Plan. Figure 13.5.1-1 shows the organizational structure of these various instructions.

Instructions and procedures covering plant operations, maintenance work, tests, equipment changes, and other activities which might affect nuclear safety are put into effect only after being reviewed by a independent qualified reviewer(s), the Plant Operations Review Committee when required, and approved by a responsible manager who is designated by the Plant Manager. It is the Site Vice President's or Plant Manager's responsibility to ensure that required reviews and approvals are completed before instructions are authorized to be issued.

The Plant Operations Review Committee is responsible for reviewing proposed instructions and changes to plant instructions that would require NRC approval before implementation or prepared tests or experiments that affect nuclear safety. On the basis of the recommendations received from this group, the Plant Manager is responsible for determining whether further review is required before approving a new instruction or a change to an existing instruction.

13.5.1.1 Administrative Procedures

Instructions, standards, programs, and processes are prepared to govern employee actions and site and plant operation. These instructions contain administrative restrictions and station requirements established to ensure safe operation of the plant within the limits set by the facility licenses and technical specifications. They provide that plant activities will be conducted in a manner to protect the general public, plant personnel, and equipment.

13.5.1.2 Operating Instructions and Procedures

Operating instructions are prepared for integrated plant operations such as plant startup, power operation, etc., where such instructions are required to ensure safety and reliability. ANSI

N.18.7-1976, and Regulatory Guide 1.33, Rev. 2 are used as guidelines in the preparation of operating instructions.

13.5.1.2.1 System Operating Instructions

Operating instructions are prepared for system operations and equipment operations to ensure safety and reliability. Most instructions must be followed step-by-step and documented. These requirements are identified within the instruction.

The instructions contain mode of operation of the system such as startup, shutdown, energizing, filling and venting, and standby operation as applicable, conditions for operation, precautions to be observed, and technical specifications.

13.5.1.2.2 Abnormal Operating Instructions/Procedures

Abnormal operating instructions/procedures exist for abnormal operation of the unit. Operation of the system or equipment in this mode could degrade into an emergency condition. Symptoms of the abnormality and operator actions are given.

13.5.1.2.3 Emergency Operating Instructions/Procedures

Emergency Instructions are prepared for conditions which may possibly lead to injury of plant personnel or to the public or conditions which may possibly lead to the release of radioactivity in excess of established operating limits. These instructions provide symptoms of the postulated emergency and immediate (if applicable) and subsequent operator actions.

13.5.1.2.4 General Operating Instructions

General operating instructions are developed to ensure safe unit startup, shutdown, and load changes.

13.5.1.2.5 Fuel Handling Instructions

Detailed fuel handling instructions are used to ensure safe and orderly refueling operations. The instructions specify or make reference to other system operation documents that specify periodic shutdown margin checks, fuel handling techniques, and other precautionary steps to assure that the facility license and technical specifications are not violated. Licensed operators will supervise the operations when fuel is received, initially inventoried, stored, removed, or rearranged in the core or when control rods are being installed, removed, or manipulated. Technical personnel will provide guidance when necessary and will verify that all fuel has the proper orientation and is in the correct location.

13.5.1.2.6 Annunciator Response Instructions

Annunciator Response instructions are written to guide operator response to conditions that result in annunciation of plant conditions.

13.5.1.3 Maintenance Instructions

13.5.1.3.1 Equipment Maintenance Instructions

Written maintenance instructions are prepared for critical equipment and for special jobs on safety related systems and 10CFR50.49 equipment as the need arises, or systems and equipment expected to require frequent or systematic maintenance. These instructions covering mechanical and electrical maintenance provide information to assure proper coordination of operating and maintenance employees as well as step-by-step actions with allowance for "skill of the craft" to be followed by the craftsmen doing the work. As operating and maintenance experience is acquired, maintenance instructions are revised and/or new instructions are written to improve the quality of the maintenance program.

13.5.1.3.2 Instrumentation Maintenance Instructions

Instrument Maintenance instructions are written for performing periodic calibration and testing of safety-related plant instrumentation. These instructions will ensure measurement accuracies adequate to maintain plant safety parameters within operational and safety limits according to technical specification requirements.

13.5.1.3.3 Special Maintenance Instructions

Special Maintenance Instructions are developed for special maintenance activities. These instructions are not routinely performed, however, results from these performances may generate routinely performed instructions covered by one of the other types of instructions addressed in Section 13.5.1.

13.5.1.4 Surveillance Instructions

Instructions are prepared covering the conduct of all periodic surveillance tests and inspections designated in the plant technical specifications. These instructions as a minimum specify requirements, precautions, acceptance criteria, necessary step-by-step actions for conduct of the test and return to normal, data sheets, and signatures of those conducting and reviewing the tests or inspections. Detailed test schedules and records are maintained to assure that all scheduled surveillance requirements are conducted in a timely manner and the results are properly documented.

13.5.1.5 Technical Instructions

Instructions are prepared covering routine technical evolutions for tests, inspections, examinations, and special processes as required. Examples of these evolutions are chemical instructions, and calibration of vital instrumentation.

Fuel accountability instructions delineating the requirements, responsibilities, and methods of nuclear material control from the time new fuel is received until it is shipped from the plant as spent fuel are utilized. They provide detailed steps for physical safeguards, inventory, accounting, and for preparing records and reports.

13.5.1.6 Radiation Control Instructions

Radiation control instructions are maintained and made available to all site personnel. These instructions are written to implement the requirements of 10 CFR 20, applicable codes and standards, and commitments to outside agencies (American Nuclear Insurers, Institute of Nuclear Plant Operations, etc).

13.5.1.7 Special Test Instructions

Instructions are prepared for special test and experiments. These instructions are normally one time performances, however, results from these tests may generate routinely performed instructions covered by one of the other types of instructions addressed in section 13.5.1.

13.5.1.8 Radiological Emergency Plan (REP) Implementing Procedures

Procedures are prepared covering the site implementation of the REP. See Subsection 13.3.

13.5.1.9 Vendor or Contractor Instructions

Instructions are prepared to convert vendor or contractor instructions into plant instructions, as applicable. These instructions will meet TVA quality assurance program and site administrative requirements.

13.5.1.10 Radwaste Handling & Shipping

Instructions are prepared covering compacting trash, packing and shipping of radioactive waste and materials or equipment, and the process control program for the radwaste system.

13.5.1.11 Flood Preparation Instructions

Instructions are prepared covering plant activities for flood conditions. These instructions provide directions of activities affecting important equipment or systems that would require extra protection to maintain their operability during a flood.

13.5.1.12 Restart Test Instructions

Instructions are prepared covering restart sequence, core reloading, initial criticality, flux mapping, and power ascension.

13.5.1.13 Modifications and Additions Instructions

Instructions are prepared covering modifications and additions to plant systems and equipment. Processes covered by these instructions include welding; pulling, splicing, and installation of cables; conduit and junction boxes; bolted connections; supports; grouting; conax connectors; coatings; and concrete.

13.5.1.14 Physical Security Instructions/Standard Programs and Processes

Instructions are prepared covering plant access, badging, vehicles, searches, physical security of vital areas of plant, security events, security degradation, and reporting and security inspections.

13.5.1.15 Periodic Instructions

Instructions are prepared covering periodic tests and inspections which are not designated in the plant technical specifications. These include but are not limited to tests designated by applicable FSAR sections, the NPDES permit, and augmented QA/test programs.

13.5.2 Safety and Health Manual

Instructions are prepared covering safety measures to be taken by personnel when handling certain types of portable mechanical or electrical equipment and protective measures which inspecting electrical equipment.

13.5.3 Section Instruction, Manuals or Equivalent

Each section supervisor may prepare, as the need arises, instructions pertaining to administrative routines, responsibilities, and methods to be followed by members of his/her section in areas of activity that does not involve nuclear safety and/or the implementation of the technical specifications.

SQN

Figure 13.5.1-1 Sequoyah's System of Written Instructions or Procedures

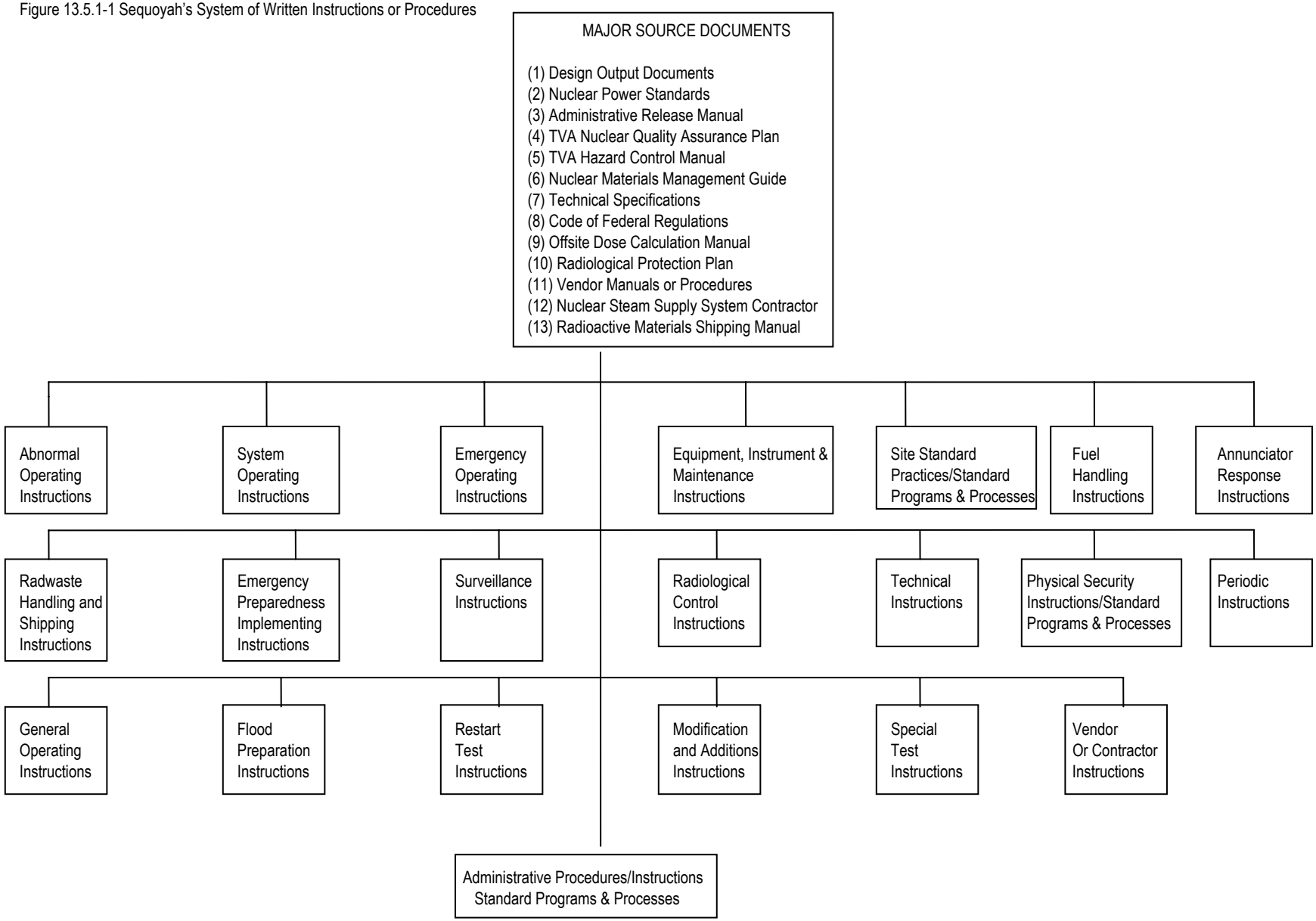

13.6 PLANT RECORDS

13.6.1 Plant History

TVA's records program observes all acts of Congress, executive orders, and regulations of Federal agencies having jurisdiction in records administration (for the particular case of nuclear plants, this includes 10 CFR 50, Appendix B, Section XVII). TVA complies with Department of Energy regulations concerning the preservation and disposal of records of public utilities and licensees, insofar as these regulations apply to TVA records relating to the generating, transmission, and sale of electric energy.

The site Management Services (MS) Manager has responsibility for 1) developing, implementing, and maintaining an integrated site program to ensure that documents are properly processed up-to-date, and readily available for use, 2) managing a program for storing, updating, and retrieving plant documents.

13.6.2 Operating Records

Records reflecting plant or equipment performance and records of tests and inspections which support compliance with the plant licenses, including records of radioactivity release to the environs, are routed to site MS for retention. These records are originated by all plant sections.

Operators maintain unit operating logs which are a chronological record of significant plant events and conditions containing details pertinent to the operation of each unit. The unit logs are retained in the Site MS. Operators also maintain operating data which ensure their frequent observations of equipment condition and operating values. These records are examined by the plant operations supervisor and are support documents for performance analysis.

The station computer printouts and the operations data serve as the normal source of operating data and statistics. To ensure continuity of information, provision is made for supplementary data to be maintained if the computer becomes inoperative. In addition, this information is supported by installed recording and data logging instrumentation. These records are sent to Site MS on a regular basis for retention.

The Maintenance and Engineering sections initiate equipment history and inventory files. The history files are maintained and updated by Site MS. These records contain complete information on all repairs, modifications, tests, derangements, and other data as considered necessary to provide a comprehensive material history of the item concerned.

Specific records and their retention periods are specified in the TVA Nuclear Quality Assurance Plan, TVA NQA-PLN89-A.

13.6.3 Event Records

Records of individual radiation exposure and plant and environs radiation levels are retained by Radiological Control.

Records of results of all surveillance and maintenance requirements are retained by Site MS. Records of radioactive effluent discharges and quantities of radioactive wastes shipped for offsite disposal are also retained by Site MS.

13.7 NUCLEAR SECURITY

TVA's plan for protection of the Sequoyah Nuclear Plant is contained in separate controlled documents. These documents require submission as separate submittals to ensure compliance with the applicable regulatory requirements indicated below. These separate submittals provide a comprehensive description of the physical security program for the plant site which include physical barriers and means of detecting unauthorized intrusions; provisions for monitoring vital equipment and access control; provisions for selection and training of personnel for security purposes; communication systems for security; provisions for maintenance and testing of security systems; arrangements for law enforcement assistance; provisions for responding to security threats; and required organizational charts and drawings that depict the site layout. These documents are identified and controlled as follows:

A. The Physical Security/Contingency plan as specified by 10 CFR Parts 50.34(c), 50.34(d), and 73.55(a), and the Security Personnel Training and Qualification Plan as specified by 10 CFR 73.55(b) are controlled in accordance with 10 CFR 73.21.

13.7.1 Personnel and Plant Design

TVA's Nuclear Power organization is responsible for protection of power properties with functional responsibility delegated to the Senior Vice President of Nuclear Power.

The Manager, Corporate Nuclear Security, represents Nuclear Power on all security matters and is responsible for developing policy for TVA's nuclear security program.

The Sequoyah Security Program is evaluated in accordance with 10 CFR 73.55(g)(4) by individual(s) who are knowledgeable of security requirements and independent of both security management and supervision. The review is conducted to determine the effectiveness of security procedures and personnel practices as they relate to the implementation of licensed security documents. Based on the review, a detailed report is submitted to appropriate management recommending corrective action and improvements, if any, to ensure the successful implementation of the security program.

13.8 Technical Requirements Manual (TRM)

The TRM is maintained in one volume for Units 1 and 2. The TRM provides an appropriate location for relocated technical specification requirements that have an action that could require a unit shutdown. The change control process for the TRM is provided in the TRM.

13.9 LICENSE RENEWAL PROGRAM

13.9.1 License Renewal -Appendix A

Appendix A represents the Updated Final Safety Analysis Report (UFSAR) Supplement as required by 10 CFR 54.21(d) for the Sequoyah Nuclear Plant (SQN) License Renewal Application (LRA).

The information presented in Appendix A is being incorporated into the UFSAR following issuance of the renewed operating license (Reference 5). Future changes to the descriptions of the programs and activities will be made in accordance with 10 CFR 50.59.

A.0 AGING MANAGEMENT PROGRAMS AND ACTIVITIES

The SQN license renewal application (Reference A.3-1) and information in subsequent related correspondence provided sufficient basis for the NRC to make the findings required by 10 CFR 54.29 (Final Safety Evaluation Reports) (Reference A.3-2). As required by 10 CFR 54.21(d), this UFSAR supplement contains a summary description of the programs and activities for managing the effects of aging (Section A.1) and a description of the evaluation of time-limited aging analyses for the period of extended operation (Section A.2). The period of extended operation is the 20 years after the expiration dates of the original operating licenses for SQN Unit 1 and Unit 2.

A.1 AGING MANAGEMENT PROGRAMS

The integrated plant assessment for license renewal identified aging management programs (AMPs) necessary to provide reasonable assurance that components within the scope of license renewal will continue to perform their intended functions consistent with the current licensing basis (CLB) for the period of extended operation (PEO). This section describes the AMPs and activities required during the PEO.

The phrase “prior to entering the PEO” means the SQN AMPs will be implemented six months prior to the PEO (for SQN1: prior to 03/17/20; for SQN2: prior to 03/15/21) or the end of the last refueling outage prior to each unit entering the PEO, whichever occurs later. The specific implementation date is provided in the commitment list for each individual commitment.

The corrective action, confirmation process, and administrative controls of the SQN (10 CFR Part 50, Appendix B) Quality Assurance Program are applicable to all aging management programs and activities during the PEO. SQN quality assurance (QA) procedures, review and approval processes, and administrative controls are implemented in accordance with the requirements of 10 CFR 50, Appendix B. The SQN Quality Assurance Program applies to safety-related and important-to-safety structures and components. Corrective actions and administrative (document) control for both safety-related and nonsafety-related structures and components are accomplished in accordance with the established SQN corrective action program (CAP) and document control program and are applicable to all aging management programs and activities during the period of extended operation. The confirmation process is part of the corrective action program and includes reviews to assure adequacy of corrective actions, tracking and reporting of open corrective actions, and review of corrective action effectiveness. Any follow-up inspection required by the confirmation process is documented in accordance with the corrective action program.

Operating experience (OE) from plant-specific and industry sources is captured and systematically reviewed on an ongoing basis in accordance with the quality assurance program, which meets the requirements of 10 CFR Part 50, Appendix B, and the operating experience program, which meets the requirements of NUREG-0737, "Clarification of TMI Action Plan Requirements," Item I.C.5, "Procedures for Feedback of Operating Experience to Plant Staff."

The OE Program includes the review of current and future revisions to NUREG-1801, “Generic Aging Lessons Learned (GALL) Report,” as a source of industry OE. The evaluation of age-related OE items is based on consideration of affected plant systems, structures, and components; materials; environments; aging effects, aging mechanisms; aging management programs; and the

activities, criteria, and evaluations integral to the elements of the aging management programs.

Codes are used in the corrective action program that provide for the comprehensive identification and categorization of aging-specific issues for plant systems, structures, and components within the scope of license renewal.

The operating experience program includes active participation in the Institute of Nuclear Power Operations' operating experience program, as endorsed by the NRC.

In accordance with these programs, all incoming operating experience items are screened to determine whether they may involve age-related degradation or impact to aging management programs (AMPs). Items so identified are further evaluated, and affected AMPs are either enhanced or new AMPs are developed, as appropriate, when it is determined through these evaluations that the effects of aging may not be adequately managed.

Assessments of AMP effectiveness are performed periodically, regardless of whether the AMP acceptance criteria are met. If an assessment concludes that the effects of aging may not be adequately managed, then a corrective action is entered into the corrective action program to either enhance the AMP or develop and implement new AMPs.

Training will be provided on aged-related topics for personnel responsible for submitting, screening, assigning, evaluating, or otherwise processing plant-specific and industry operating experience, as well as for personnel responsible for implementing AMPs, is based on the complexity of the job performance requirements and assigned responsibilities. Training is scheduled on a recurring basis, which accommodates the turnover of plant personnel and allows for incorporation of new training content.

Plant-specific operating experience associated with aging management and age-related degradation is reported to the industry in accordance with guidelines established in the operating experience review program.

The following enhancements have been implemented.

- Revise OE Program Procedure to include current and future revisions to NUREG-1801, “Generic Aging Lessons Learned (GALL) Report,” as a source of industry OE, and unanticipated age-related degradation or impacts to aging management activities as a screening attribute.
- Revise the CAP Procedure to provide a screening process of corrective action documents for aging management items, the assignment of aging corrective actions to appropriate AMP owners, and consideration of the aging management trend code.
- Revise AMP procedures as needed to provide for review and evaluation by AMP owners of data from inspections, tests, analyses or AMP OEs.

- Revise the OE Program Procedure to provide guidance for reporting plant-specific operating experience on unanticipated age-related degradation or impact to aging management activities to the TVA fleet and/or INPO.Revise the OE, CAP, Initial and Continuing Engineering Support Personnel Training to address age-related topics, the unanticipated degradation or impacts to the aging management activities; including periodic refresher/update training and provisions to accommodate the turnover of plant personnel, and recent AMP-related OE from INPO, the NRC, Scientech, and nuclear industry-initiated guidance documents and standards.
- A comprehensive and holistic AMP training topic list will be developed before the date the SQN renewed operating license is scheduled to be issued.
- TVA AMP OE Process, AMP adverse trending & evaluation in CAP, AMP Initial and Refresher Training will be fully implemented by the date the SQN renewed operating license is scheduled to be issued.

A.1.1 Aboveground Metallic Tanks Program

The Aboveground Metallic Tanks Program includes outdoor tanks on soil or concrete and indoor large volume water tanks (excluding the fire water storage tanks) situated on concrete that are designed for internal pressures approximating atmospheric pressure. This program includes the Refueling Water Storage Tanks and the Condensate Storage Tanks. Periodic external visual and surface examinations are sufficient to monitor degradation. Internal visual and surface examinations are conducted in conjunction with measuring the thickness of the tank bottoms to ensure that significant degradation is not occurring and that the component's intended function is maintained during the PEO. Internal inspections are conducted whenever the tank is drained, with a minimum frequency of at least once every 10 years, beginning in the appropriate interval (5-years for one time inspections, 10-years for periodic inspections) prior to the PEO. The program is consistent with NRC guidance contained in Appendix E of LR-ISG-2012-02 "Aging Management of Internal Surfaces, Fire Water Systems, Atmospheric Storage Tanks, and Corrosion Under Insulation" which represents an acceptable deviation from the requirements of the GALL Report for the Aboveground Metallic Tanks Program.

APPENDIX A

The following table provides tank inspection details:

Tank Inspection Recommendations[1, 2]				
Material	Environment	AERM	Inspection Technique[3]	Inspection Frequency
Inspections to identify degradation of inside surfaces of tank shell, roof[4], and bottom Inside Surface (IS), Outside Surface (OS)[5, 6]				
Steel	Raw water Waste water	Loss of material	Visual from IS or Volumetric from OS[7]	Each 10-year period starting 10 years before the period of extended operation
Steel	Treated water	Loss of material	Visual from IS or Volumetric from OS[7]	One-time inspection conducted in accordance with AMP XI.M32[8]
Stainless steel	Treated water	Loss of Material	Visual from IS or Volumetric from OS[7]	One-time inspection conducted in accordance with AMP XI.M32[8]
Aluminum	Treated water	Loss of Material	Visual from IS or Volumetric from OS[7]	One-time inspection conducted in accordance with AMP XI.M32[8]
Inspections to identify degradation of external surfaces of tank roof, tank shell, and bottom not exposed to soil or concrete[9]				
Steel	Air – indoor uncontrolled Air – outdoor	Loss of material	Visual from OS	Each refueling outage interval
Stainless steel	Air – indoor uncontrolled	Cracking	Surface [10, 11]	Each 10-year period starting 10 years before the period of extended operation
Stainless steel	Air-outdoor	Loss of material	Visual from OS	Each refueling outage interval
		Cracking	Surface[10, 11]	Each 10-year period starting 10 years before the period of extended operation
Aluminum	Air – indoor uncontrolled	Cracking	Surface[10, 11]	Each 10-year period starting 10 years before the period of extended operation
Aluminum	Air-outdoor	Loss of material	Visual from OS	Each refueling outage interval
		Cracking	Surface[10, 11]	Each 10-year period starting 10 years before the period of extended operation
Inspections to identify degradation of external surfaces of tank bottoms and tank shells exposed to soil or concrete				
Steel	Soil or concrete	Loss of material	Volumetric from IS[12]	Each 10-year period starting 10 years before the period of extended operation[13]
Stainless steel	Soil or concrete	Loss of material	Volumetric from IS[12]	Each 10-year period starting 10 years before the period of extended operation[13]
Aluminum	Soil or concrete	Loss of Material	Volumetric from IS[12]	Each 10-year period starting 10 years before the period of extended operation[13]

APPENDIX A

1. GALL Report AMP XI.M30, “Fuel Oil Chemistry,” is used to manage loss of material on the internal surfaces of fuel oil storage tanks. However, for outdoor fuel oil storage tanks, inspections to identify aging of the external surfaces of tank bottoms and tank shells exposed to soil or concrete are conducted in accordance with GALL Report AMP XI.M29. GALL Report AMP XI.M41 is used to manage loss of material and cracking for the external surfaces of buried tanks.
2. When one-time internal inspections in accordance with these footnotes are used in lieu of periodic inspections, the one-time inspection must occur within the 5-year period before the start of the PEO.
3. Alternative inspection methods may be used to inspect both surfaces (i.e., internal, external) or the opposite surface (e.g., inspecting the internal surfaces for loss of material from the external surface, inspecting for corrosion under external insulation from the internal surfaces of the tank) as long as the method has been demonstrated to be effective at detecting the AERM and a sufficient amount of the surface is inspected to ensure that localized aging effects are detected. For example, in some cases, subject to being demonstrated effective by the applicant, the low frequency electromagnetic technique (LFET) can be used to scan an entire surface of a tank. If follow-up ultrasonic examinations are conducted in any areas where the wall thickness is below nominal, an LFET inspection can effectively detect loss of material in the tank shell, roof, or bottom.
4. Non-wetted surfaces on the inside of a tank (e.g., roof, surfaces above the normal waterline) are inspected in the same manner as the wetted surfaces based on the material, environment, and AERM.
5. Visual inspections to identify degradation of the inside surfaces of tank shell, roof, and bottom should cover all the inside surfaces. Where this is not possible because of the tank’s configuration (e.g., tanks with floating covers or bladders), the LRA should include a justification for how aging effects will be detected before the loss of the tank’s intended function.
6. For tank configurations in which deleterious materials could accumulate on the tank bottom (e.g., sediment, silt), the internal inspections of the tank’s bottom should include inspections of the side wall of the tank up to the top of the sludge-affected region.
7. At least 25 percent of the tank’s internal surface is to be inspected using a method capable of precisely determining wall thickness. The inspection method should be capable of detecting both general and pitting corrosion and be demonstrated effective by the applicant.
8. At least one tank for each material and environment combination should be inspected at each site. The tank inspection can be credited towards the sample population for GALL Report AMP XI.M32.

9. For insulated tanks, the external inspections of tank surfaces that are insulated are conducted in accordance with the sampling recommendations in this AMP. If the initial inspections meet the criteria described in the preceding “Alternatives to Removing Insulation” portion of this AMP, subsequent inspections may consist of external visual inspections of the jacketing in lieu of surface examinations. Tanks with tightly adhering insulation may use the “Alternatives to Removing Insulation” portion of this AMP for initial and all follow-on inspections.
10. A one-time inspection conducted in accordance with GALL Report AMP XI.M32 may be conducted in lieu of periodic inspections if an evaluation conducted before the PEO and during each 10-year period during the PEO demonstrates the absence of environmental impacts in the vicinity of the plant due to: (a) the plant being located within approximately 5 miles of a saltwater coastline, or within 1/2 mile of a highway that is treated with salt in the wintertime, or in areas in which the soil contains more than trace amounts of chlorides, (b) cooling towers where the water is treated with chlorine or chlorine compounds, and (c) chloride contamination from other agricultural or industrial sources. The evaluation should include soil sampling in the vicinity of the tank (because soil results indicate atmospheric fallout accumulating in the soil and potentially affecting tank surfaces) and sampling of residue on the top and sides of the tank to ensure that chlorides or other deleterious compounds are not present at sufficient levels to cause pitting corrosion, crevice corrosion, or cracking.
11. A minimum of either 25 sections of the tank’s surface (e.g., 1-square-foot sections for tank surfaces, 1-linear-foot sections of weld length) or 20 percent of the tank’s surface are examined. The sample inspection points are distributed in such a way that inspections occur in those areas most susceptible to degradation (e.g., areas where contaminants could collect, inlet and outlet nozzles, welds).
12. When volumetric examinations of the tank bottom cannot be conducted because the tank is coated, an exception should be stated, and the accompanying justification for not conducting inspections should include the considerations in footnote 13, below, or propose an alternative examination methodology.

13. A one-time inspection conducted in accordance with GALL Report AMP XI.M32 may be conducted in lieu of periodic inspections if an evaluation conducted before the PEO and during each 10-year period during the PEO demonstrates that the soil under the tank is not corrosive using actual soil samples that are analyzed for each individual parameter (e.g., resistivity, pH, redox potential, sulfides, sulfates, moisture) and overall soil corrosivity. The evaluation should include soil sampling from underneath the tank. Alternatively, a one-time inspection conducted in accordance with GALL Report AMP XI.M32 may be conducted in lieu of periodic inspections if the bottom of the tank has been cathodically protected in such a way that the availability and effectiveness criteria of LR-ISG-2011-03, “Changes to the Generic Aging Lessons Learned (GALL) Report Revision 2 Aging Management Program (AMP) XI.M41, ‘Buried and Underground Piping and Tanks’,” Table 4c., “Inspections of Buried Tanks for all Inspection Periods,” have been met beginning 5 years prior to the PEO, and the criteria continue to be met throughout the PEO.

A.1.2 Bolting Integrity Program

The Bolting Integrity Program manages loss of preload, cracking, and loss of material for closure bolting for safety-related and nonsafety-related pressure-retaining components using preventive and inspection activities. This program does not include the reactor head closure studs or structural bolting. Preventive measures include material selection (e.g., use of materials with an actual yield strength of less than 150 kilo-pounds per square inch [ksi]), lubricant selection (e.g., restricting the use of molybdenum disulfide), applying the appropriate preload (torque), and checking for uniformity of gasket compression where appropriate to preclude loss of preload, loss of material, and cracking. This program supplements the inspection activities required by ASME Section XI for ASME Class 1, 2 and 3 bolting. For ASME Code Class 1, 2, and 3, and non-ASME Code class bolts, periodic system walkdowns and inspection (at least once per refueling cycle) ensure identification of indications of loss of preload (leakage), cracking, and loss of material before leakage becomes excessive. A representative sample of submerged bolts in the ERCW system are visually inspected for degradation at least once every five years. The representative sample for ERCW system submerged bolts will be 20% of the population, with a maximum of 25, during each five year inspection interval. The inspection of ERCW system submerged bolts focuses on the bounding or lead components most susceptible to aging due to time in service and severity of operating conditions. Visual inspection methods are effective in detecting the applicable aging effects and the frequency of inspection is adequate to prevent significant age-related degradation. No high-strength bolting has been identified at SQN. Identified leaking bolted connections will be monitored at an increased frequency in accordance with the corrective action process. Applicable industry standards and guidance documents, including NUREG-1339, EPRI NP-5769, and EPRI TR-104213, are used to delineate the program.

The Bolting Integrity Program has been enhanced as follows.

- Revise Bolting Integrity Program procedures to ensure the actual yield strength of replacement or newly procured bolts will be less than 150 ksi.

- Revise Bolting Integrity Program procedures to include the additional guidance and recommendations of EPRI NP-5769 for replacement of ASME pressure-retaining bolts and the guidance provided in EPRI TR-104213 for the replacement of other pressure-retaining bolts.

- Revise Bolting Integrity Program procedures to specify a corrosion inspection and a check-off for the transfer tube isolation valve flange bolts."

- Revise Bolting Integrity Program procedures to visually inspect a representative sample of normally submerged ERCW system bolts at least once every five years."

A.1.3 Boric Acid Corrosion Program

The Boric Acid Corrosion Program manages loss of material and increase in connection resistance for components on which borated reactor water may leak. The program consists of (a) visual inspection of external surfaces that are potentially exposed to borated water leakage, (b) timely discovery of leak path and removal of boric acid residues, (c) assessment of the damage, and (d) follow-up inspection for adequacy. This program was implemented in response to NRC Generic Letter (GL) 88-05 and industry operating experience.

The program provides systematic measures to ensure that corrosion caused by leaking borated coolant does not lead to degradation of the leakage source, adjacent structures, or electrical components and provides reasonsable assurance that the reactor coolant pressure boundary will have an extremely low probability of abnormal leakage, rapidly propagating failure, or gross rupture. Visual inspections are performed for boric acid deposits, discoloration, staining, and moisture on insulated surfaces. If evidence of leakage is identified, insulation is required to be removed to determine the exact location and cause of the leakage. The Boric Acid Corrosion Program includes provisions for triggering evaluations and assessments when leakage is discovered by other activities (normal plant walkdowns, maintenance, etc.) to identify and correct boric acid leakage before loss of intended function of affected components. Corrective actions may include modifications to existing design or operating procedures to reduce the probability of boric acid leakage at locations where such leaks may cause corrosion damange.

A.1.4 Buried and Underground Piping and Tanks Inspection Program

The Buried and Underground Piping and Tanks Inspection Program manages loss of material and cracking for the external surfaces of buried and underground piping fabricated from carbon steel and stainless steel through preventive measures (i.e., coatings, backfill, and compaction), mitigative measures (e.g., electrical isolation between piping and supports of dissimilar metals), and periodic inspection activities (i.e., direct visual inspection of external surfaces, protective coatings, wrappings, and quality of backfill) during opportunistic or directed excavations. There are no underground or buried tanks at SQN for which aging effects are managed by the Buried and Underground Piping and Tanks Inspection Program.

Based on the guidance of NUREG-1801 Rev. 2, Section XI.M41, as modified by LR-ISG-2015-01, cathodic protection will be provided at SQN prior to the period of extended operation of Unit 1.

Based on the guidance of NUREG-1801 Rev. 2, Section XI.M41, as modified by LR-ISG-2015-01, buried high pressure fire protection (HPFP) piping will be managed by periodic flow testing in accordance with NFPA 25. The cathodic protection system will not be credited for protecting the buried high pressure fire protection piping.

A.1.5 Compressed Air Monitoring Program

The Compressed Air Monitoring Program manages loss of material in compressed air systems by periodically monitoring air samples for moisture and contaminants and by opportunistically

inspecting internal surfaces within compressed air systems. Inspection frequency and acceptance criteria are based on the SQN response to NRC GL 88-14 and SOER 88-01 along with applicable industry standards and documents such as ASME OMa-S/G-1998, Part 17 and ISA-S7.0.1-1996 for guidance on testing and monitoring air quality.

The Compressed Air Monitoring Program has been enhanced as follows.

- Revise Compressed Air Monitoring Program procedures to include the standby diesel generator (DG) starting air subsystem.
- Revise Compressed Air Monitoring Program procedures to include maintaining moisture and other contaminants below specified limits in the standby DG starting air subsystem.

- Revise Compressed Air Monitoring Program procedures to apply a consideration of the guidance of ASME OMa-S/G-1998, Part 17; EPRI NP-7079; and EPRI TR-108147 to the limits specified for the air system contaminants.

- Revise Compressed Air Monitoring Program procedures to maintain moisture, particulate size, and particulate quantity below acceptable limits in the standby DG starting air subsystem to mitigate loss of material.

- Revise Compressed Air Monitoring Program procedures to include periodic and opportunistic visual or nondestructive examination (NDE) inspections consistent with frequencies described in ASME OMa-S/G-1998, Part 17 of accessible internal surfaces such as compressors, dryers, after-coolers, and filter boxes of the following compressed air systems:

    - Diesel starting air subsystem

    - Auxiliary controlled air subsystem

    - Nonsafety-related controlled air subsystem

- Revise Compressed Air Monitoring Program procedures to monitor and trend moisture content in the standby DG starting air subsystem.
- Revise Compressed Air Monitoring Program procedures to include consideration of the guidance for acceptance criteria in ASME OMa-S/G-1998, Part 17; EPRI NP-7079; and EPRI TR-108147.

A.1.6 Containment Inservice Inspection – IWE Program

The Containment Inservice Inspection (CII) – IWE Program implements the requirements of 10 CFR 50.55a. The regulations in 10 CFR 50.55a impose the inservice inspection (ISI) requirements of the American Society of Mechanical Engineers (ASME) Boiler and Pressure Vessel (B&PV) Code, Section XI, Subsection IWE, for steel containments (Class MC) and steel liners for concrete containments (Class CC). The SQN containment design is a low-leakage, free-standing steel containment founded on the circular concrete foundation slab of the shield building. The portion of SQN's containment that is classified as Class CC equivalent is the circular concrete foundation slab of the shield building. The bottom steel liner plate of the steel containment vessel was erected on top of the circular concrete foundation slab with a two-foot thick concrete slab poured on top of the liner plate. Since the Class CC equivalent concrete foundation slab and the bottom steel liner plate are inaccessible, they are exempted from examination in accordance with IWL-1220(b) and IWE-1220(b). There are no tendons associated with SQN's steel containment vessel. The code of record for the examination of the SQN containment, Class MC and Class CC components is ASME Code Section XI, Subsections IWE and IWL, 2001 Edition with the 2003 Addenda, as mandated and modified by 10 CFR 50.55a.

The CII-IWE Program is augmented by plant procedures that use the guidance of EPRI TR-104213, NUREG-1339, and EPRI NP-5769 to ensure proper specification of bolting material, lubricant and sealants, and installation torque. .

A.1.7 Containment Leak Rate Program

The Containment Leak Rate Program consists of tests performed in accordance with the regulations and guidance provided in 10 CFR Part 50, Appendix J, "Primary Reactor Containment Leakage Testing for Water-Cooled Power Reactors," Option B; NEI 94-01, "Industry Guideline for Implementing Performance-Based Options of 10 CFR Part 50, Appendix J"; Revision 3-A and Revision 2-A; and ANSI/ANS 56.8, "Containment System Leakage Testing Requirements," 2002 Edition. The Containment Leak Rate Program provides for detection of pressure boundary degradation due to aging effects such as loss of leakage tightness, loss of material, cracking, loss of sealing, or loss of preload in various systems penetrating containment. The program also provides for detection of age-related degradation in material properties of gaskets, O-rings, and packing materials for the containment pressure boundary access points.

Three types of tests are performed under Option B. Type A tests are performed to determine the overall primary containment integrated leakage rate at the loss of coolant accident peak containment pressure. Performance of the integrated leakage rate test (ILRT) per 10 CFR Part 50, Appendix J, Option B, demonstrates the leak-tightness and structural integrity of the containment. Type B containment leakage rate tests (LRT) are intended to detect local leaks and to measure leakage across each pressure-containing or leakage-limiting boundary of containment penetrations. Type C tests are intended to detect local leaks and to measure leakage across containment isolation valves installed in containment penetrations or lines penetrating containment. Containment leakage rate tests are performed at frequencies that comply with the requirements of 10 CFR Part 50, Appendix J, Option B.

“The Containment Leak Rate Program has been enhanced as follows.

- Revise Containment Leak Rate Program procedures to require venting the SCV bottom liner plate weld leak test channels to the containment atmosphere prior to the CILRT and resealing the vent path after the CILRT to prevent moisture intrusion during plant operation.”

A.1.8 Diesel Fuel Monitoring Program

The Diesel Fuel Monitoring Program manages loss of material in piping, tanks, and components exposed to an environment of diesel fuel oil by verifying quality of the fuel oil source before allowing it to enter the fuel oil storage tanks, as well as periodic draining, cleaning, and inspection of the fuel oil storage tanks. Applicable industry standards and guidance documents are used to establish inspection frequency. Acceptance criteria for fuel oil quality parameters are specified in the SQN technical specifications.

The One-Time Inspection Program (Section A.1.29) describes inspections planned to verify that the Diesel Fuel Monitoring Program has been effective at managing aging effects.

The Diesel Fuel Monitoring Program has been enhanced as follows.

- Revise Diesel Fuel Monitoring Program procedures to monitor and trend sediment and particulates in the standby DG day tanks.

- Revise Diesel Fuel Monitoring Program procedures to monitor and trend levels of microbiological organisms in the seven-day storage tanks.

- Revise Diesel Fuel Monitoring Program procedures to include a ten-year periodic inspection of the standby DG diesel fuel oil day tanks and high pressure fire protection (HPFP) diesel fuel oil storage tank. These inspections will be performed at least once during the ten-year period prior to the period of extended operation and at succeeding ten-year intervals. If a visual inspection is not possible, a volumetric inspection will be performed. The HPFP diesel fuel oil storage tank inspections will be supplemented by cleaning, if necessary based on inspection results, to remove any accumulated sediment. The standby DG diesel fuel oil day tank inspections will be supplemented by cleaning, to remove sediment, if warranted based on the results of a) periodic cleaning of the yard fuel oil storage tanks and seven-day tanks, b) periodic cleaning of the fuel pump suction strainers and filters, and c) day tank sediment and particulate monitoring.

- Revise Diesel Fuel Monitoring Program procedures to include a volumetric examination of affected areas of the diesel fuel oil tanks, if evidence of degradation is observed during visual inspection. The scope of this enhancement includes the standby DG seven-day fuel oil storage tanks, standby DG fuel oil day tanks, and HPFP diesel fuel oil storage tank and is applicable to the inspections performed during the ten-year period prior to the period of extended operation and succeeding ten-year intervals.

A.1.9 Environmental Qualification (EQ) of Electric Components Program

The Environmental Qualification (EQ) of Electric Components Program manages the effects of thermal, radiation, and cyclic aging through the use of aging evaluations based on 10 CFR 50.49(f) qualification methods. As required by 10 CFR 50.49, EQ components are refurbished, replaced, or their qualification is extended prior to reaching the aging limits established in the evaluation. Reanalysis of an aging evaluation addresses attributes of analytical methods, data collection and reduction methods, underlying assumptions, acceptance criteria, and corrective actions. Some aging evaluations for EQ components are time-limited aging analyses (TLAAs) for license renewal.

A.1.10 External Surfaces Monitoring Program

The External Surfaces Monitoring Program manages aging effects of components fabricated from metallic and polymeric materials through periodic visual inspection of external surfaces during system inspections and walkdowns for evidence of leakage, loss of material (including loss of material due to wear), cracking, and change in material properties. When appropriate for the component and material, physical manipulation is used to augment visual inspections to confirm the absence of elastomer hardening and loss of strength. Inspections will be performed by personal qualified through plant-specific programs, and deficiencies are documented and evaluated under the corrective action program. Surfaces that are not readily visible during plant operations and refueling outages are inspected when they are made accessible and at such intervals that would ensure the components' intended functions are maintained.

APPENDIX A

For a representative sample of outdoor insulated components and indoor insulated components operated below the dew point, which have been identified with more than nominal degradation on the exterior of the component, insulation is removed for inspection of the component surface. For a representative sample of indoor insulated components operated below the dew point, which have not been identified with more than nominal degradation on the exterior of the component, the insulation exterior surface is inspected. These inspections will be conducted during each 10-year period during the PEO.

The External Surfaces Monitoring Program has been enhanced as follows.

- Revise External Surfaces Monitoring Program procedures to clarify that periodic inspections of systems in scope and subject to aging management review for license renewal in accordance with 10 CFR 54.4(a)(1) and (a)(3) will be performed. Inspections shall include areas surrounding the subject systems to identify hazards to those systems. Inspections of nearby systems that could impact the subject systems will include SSCs that are in scope and subject to aging management review for license renewal in accordance with 10 CFR 54.4(a)(2).
- Revise External Surfaces Monitoring Program procedures to include instructions to look for the following related to metallic components:
    - Corrosion and material wastage (loss of material).
    - Leakage from or onto external surfaces (loss of material).
    - Worn, flaking, or oxide-coated surfaces (loss of material).
    - Corrosion stains on thermal insulation (loss of material).
    - Protective coating degradation (cracking, flaking, and blistering).
    - Leakage for detection of cracks on the external surfaces of stainless steel components exposed to an air environment containing halides.
- Revise External Surfaces Monitoring Program procedures to include instructions for monitoring aging effects for flexible polymeric components through physical manipulations of the material, with a sample size for manipulation of at least ten percent of the available surface area. The inspection parameters for polymers shall include the following:
    - Surface cracking, crazing, scuffing, dimensional changes (e.g., ballooning and necking).
    - Discoloration.
    - Exposure of internal reinforcement for reinforced elastomers (loss of material).
    - Hardening as evidenced by loss of suppleness during manipulation where the component and material can be manipulated

- Revise External Surfaces Monitoring Program procedures to specify the following for insulated components.
  - Periodic representative inspections are conducted during each 10-year period during the PEO.
  - For a representative sample of outdoor components, except tanks, and indoor components, except tanks, identified with more than nominal degradation on the exterior of the component, insulation is removed for visual inspection of the component surface. Inspections include a minimum of 20 percent of the in-scope piping length for each material type (e.g., steel, stainless steel, copper alloy, aluminum). For components with a configuration which does not conform to a 1-foot axial length determination (e.g., valve, accumulator), 20 percent of the surface area is inspected. Inspected components are 20% of the population of each material type with a maximum of 25. Alternatively, insulation is removed and component inspections performed for any combination of a minimum of 25 1-foot axial length sections and individual components for each material type (e.g., steel, stainless steel, copper alloy, aluminum.)
  - For a representative sample of indoor components, except tanks, operated below the dew point, which have not been identified with more than nominal degradation on the exterior of the component, the insulation exterior surface or jacketing is inspected. These visual inspections verify that the jacketing and insulation is in good condition. The number of representative jacketing inspections will be at least 50 during each 10-year period.

  If the inspection determines there are gaps in the insulation or damage to the jacketing that would allow moisture to get behind the insulation, then removal of the insulation is required to inspect the component surface for degradation.

  - For a representative sample of indoor insulated tanks operated below the dew point and all insulated outdoor tanks, insulation is removed from either 25 1-square foot sections or 20 percent of the surface area for inspections of the exterior surface of each tank. The sample inspection points are distributed so that inspections occur on the tank dome, sides, near the bottom, at points where structural supports or instrument nozzles penetrate the insulation, and where water collects (for example on top of stiffening rings).
  - Inspection locations are based on the likelihood of corrosion under insulation (CUI). For example, CUI is more likely for components experiencing alternate wetting and drying in environments where trace contaminants could be present and for components that operate for long periods of time below the dew point.
  - If tightly adhering insulation is installed, this insulation should be impermeable to moisture and there should be no evidence of damage to the moisture barrier. Given that the likelihood of CUI is low for tightly adhering insulation, a minimal number of inspections of the external moisture barrier of this type of insulation, although not zero, will be credited toward the sample population.
  - Subsequent inspections will consist of an examination of the exterior surface of the insulation for indications of damage to the jacketing or protective outer layer of the insulation, if the following conditions are verified in the initial inspection.

- No loss of material due to general, pitting or crevice corrosion, beyond that which could have been present during initial construction
- No evidence of cracking

Nominal degradation is defined as no loss of material due to general, pitting, or crevice corrosion, beyond that which could have been present during initial construction, and no evidence of cracking. If the external visual inspections of the insulation reveal damage to the exterior surface of the insulation or there is evidence of water intrusion through the insulation (e.g. water seepage through insulation seams/joints), periodic inspections under the insulation will continue as described above.

- Revise External Surfaces Monitoring Program procedures to include acceptance criteria. Examples include the following:

  - Stainless steel should have a clean shiny surface with no discoloration.
  - Other metals should not have any abnormal surface indications.
  - Flexible polymers should have a uniform surface texture and color with no cracks and no unanticipated dimensional change, no abnormal surface with the material in an as-new condition with respect to hardness, flexibility, physical dimensions, and color.
  - Rigid polymers should have no erosion, cracking, checking or chalks.
  - Specific, measurable, actionable/attainable and relevant acceptance criteria are established in the maintenance and surveillance procedures or are established during engineering evaluation of the degraded condition.

A.1.11 Fatigue Monitoring Program

The Fatigue Monitoring Program ensures that fatigue usage remains within allowable limits by (a) tracking the number of critical thermal and pressure transients for selected components, (b) verifying that the severity of monitored transients are bounded by the design transient definitions for which they are classified, (c) assessing the impact of the reactor coolant environment on a set of sample critical components, and (d) addressing applicable fatigue exemptions.

The Fatigue Monitoring Program has been enhanced as follows.

- Revise Fatigue Monitoring Program procedures to monitor and track critical thermal and pressure transients for components that have been identified to have a fatigue TLAA.
- Fatigue usage calculations that consider the effects of the reactor water environment will be developed for a set of sample reactor coolant system components. This sample set will include the locations identified in NUREG/CR-6260 and additional plant-specific component locations in the reactor coolant pressure boundary if they are found to be more limiting than those considered in NUREG/CR-6260. In addition, fatigue usage calculations for reactor vessel internals (lower core plate and control rod drive (CRD) guide tube pins) will be

evaluated for the effects of the reactor water environment. F_{en} factors will be determined as described in Section A.2.2.3.

- Fatigue usage factors for the reactor coolant system pressure boundary components will be adjusted as necessary to to incorporate the effects of the Cold Overpressure Mitigation System (COMS) event (i.e., low temperature overpressurization event) and the effects of the structural weld overlays.

- Revise Fatigue Monitoring Program procedures to provide updates of the fatigue usage calculations and cycle-based fatigue waiver evaluations on an as-needed basis if an allowable cycle limit is approached, or in a case where a transient definition has been changed, unanticipated new thermal events are discovered, or the geometry of components has been modified.

- Revise Fatigue Monitoring Program procedures to track the tensioning cycles for the reactor coolant pump hydraulic studs.

A.1.12 Fire Protection Program

The Fire Protection Program manages cracking, loss of material, delamination, separation, and change in material properties through periodic visual inspection of components and structures with a fire barrier intended function. It also performs functional testing of fire doors and inspections and testing of the CO_2 fire suppression system. The program includes visual inspections of not less than ten percent of each type of penetration seal at least once per refueling cycle and visual inspections of the fire barrier walls, ceilings and floors in structures within the scope of license renewal at a frequency of at least once per refueling cycle. Inspections of fire barriers include inspections of coatings and wraps. Periodic visual and functional tests are used to manage the aging effects of fire doors. The visual inspection frequency for fire doors is at least once per refueling cycle, and functional tests of closing mechanisms and latches for required doors is at least once per refueling cycle. The Fire Protection Program performs visual inspections of the CO_2 system every 18 months to identify conditions of corrosion. A functional test of the CO_2 system is performed every 18 months, which is consistent with the standards of NFPA 12A.

The Fire Protection Program has been enhanced as follows.

- Revise Fire Protection Program procedures to include an inspection of fire barrier walls, ceilings, and floors for any signs of degradation such as cracking, spalling, or loss of material caused by freeze thaw, chemical attack, or reaction with aggregates.
- Revise Fire Protection Program procedures to provide acceptance criteria of no significant indications of concrete cracking, spalling, and loss of material of fire barrier walls, ceilings, and floors and in other fire barrier materials.

A.1.13 Fire Water System Program

The Fire Water System Program (FWSP) manages loss of material and fouling for components in fire protection systems (including the fire water storage tanks). The program includes periodic flushing and system performance testing in accordance with the applicable National Fire Protection Association (NFPA) commitments as described in the Fire Protection Report. System pressure is monitored such that loss of pressure is immediately detected and corrective action initiated. Portions of the system exposed to water are internally visually inspected. Sprinkler heads that have been in place for 50 years are tested in accordance with NFPA 25 Section 5.3.1 if not replaced.

The Fire Water System Program has been enhanced as follows.

- Revise (FWSP) procedures to periodically remove a representative sample of components such as sprinkler heads or couplings, within five years prior to the PEO and every five years during the PEO, to perform a visual internal inspection of the dry fire water system piping for evidence of corrosion, loss of wall thickness, and foreign material that may result in flow blockage using the methodology described in NFPA-25 Section 14.2.1.

- Revise FWSP procedures to perform one of the following inspection methods for those sections of dry piping described in NRC Information Notice (IN) 2013-06, where drainage is not occurring, to ensure there is no flow blockage in each five-year interval beginning with the five-year period before the PEO:

  (a) Perform a flow test or flush sufficient to detect potential flow blockage.
  (b) Remove sprinkler heads or couplings in the areas that do not drain and perform a 100% visual internal inspection to verify there are no signs of abnormal corrosion (wall thickness loss) or blockage.

  If option (a) is chosen, controls will be established to ensure potential blockage is not moved to another part of the system where it may be undetected.

  In each five-year interval during the PEO, 20% of the length of piping segments that cannot be drained or piping segments that allow water to collect will be subjected to UT wall thickness examination.

  The piping examined during each inspection interval will be piping that was not previously examined.

  If the results of a 100% internal visual inspection are acceptable, and the segment is not subsequently wetted, no further augmented tests or inspections will be performed.

- Revise FWSP procedures to ensure sprinkler heads are tested .in accordance with NFPA -25 (2011 Edition), Section 5.3.1.

- Revise Fire Water System Program procedures to include acceptance criteria for periodic visual inspection of fire water system internals for corrosion, minimum wall thickness, and the absence of biofouling in the sprinkler system that could cause corrosion in the sprinklers.

- Revise FWSP procedures to perform an obstruction evaluation in accordance with NFPA-25 (2011 Edition), Section 14.3.1.

- Revise FWSP Program procedures to conduct follow-up volumetric examinations if internal visual inspections detect surface irregularities that could be indicative of wall loss below nominal pipe wall thickness.

- Revise FWSP procedures to annually inspect the fire water storage tank exterior painted surface for signs of degradation. If degradation is identified, conduct follow-up volumetric examinations to ensure wall thickness is equal to or exceeds nominal wall thickness. The fire water storage tanks will be inspected in accordance with NFPA-25 (2011 Edition) requirements.

- Revise FWSP procedures to include a fire water storage tank interior inspection every five years that includes inspections for signs of pitting, spalling, rot, waste material and debris, and aquatic growth. Include in the revision direction to perform fire water storage tank interior coating testing, if any degradation is identified, in accordance with ASTM D 3359 or equivalent, a dry film thickness test at random locations to determine overall coating thickness; and a wet sponge test to detect pinholes, cracks or other compromises of the coating. If there is evidence of pitting or corrosion ensure the Fire Water System Program procedures direct performance of an examination to determine wall and bottom thickness.

- Revise FWSP procedures to perform annual spray head discharge pattern tests from all open spray nozzles to ensure that patterns are not impeded by plugged nozzles, to ensure that nozzles are correctly positioned, and to ensure that obstructions do not prevent discharge patterns from wetting surfaces to be protected. Where the nature of the protected critical equipment or property is such that water cannot be discharged, the nozzles shall be inspected for proper orientation and the system tested with smoke or some other medium to ensure that the nozzles are not obstructed.

- Revise FWSP procedures to ensure that the dry piping is unobstructed downstream of deluge valves protecting indoor areas containing critical equipment by flow testing with air, smoke, or other medium from deludge valve through the sprinkler heads. Based on the trip testing of the deluge valves without flow through the downstream piping and sprinkler heads, additional testing in the RCA or areas containing critical equipment is not warranted due to the addition of a risk-significant activities and the production of additional radwaste.
- Revise FWSP procedures to perform an internal inspection of the accessible piping associated with the strainer inspections for corrosion and foreign material that may cause blockage. Document any abnormal corrosion or foreign material in the CAP.
- Revise FWSP procedures to perform 25 main drain tests every 18 months (for three 18-month intervals). At least one main drain test is performed in each of the following buildings: (1) control building, (2) auxiliary building, (3) turbine building, and (4) diesel generator building.

  The results of the main drain tests from the three 18-month inspection intervals will be evaluated to determine if the NFPA 25 (2014 Edition) main drain test guidance can be applied to the number of main drain tests performed (.i.e., Section 13.2.5, "A main drain test shall be conducted annually for each water supply lead-in to a building water-based fire protection system to determine whether there has been a change in the condition of the water supply" and Section 13.2.5.1 "Where the lead-in to a building supplies a header or manifold serving multiple systems, a single main drain test shall be performed.")

APPENDIX A

Any flow blockage or abnormal discharge identified during flow testing or any change in delta pressure during the main drain testing greater than 10% at a specific location is entered into the CAP.

Flow or main drain testing increases risk due to the potential for water contacting critical equipment in the area, and main drain testing in the RCAs increase the amount of liquid radwaste. Therefore, SQN will not perform main drain tests on every standpipe with an automatic water supply and every system riser.

- Revise FWSP procedures to include acceptance criteria equivalent to “no debris” (i.e., no corrosion products that could impede flow or cause downstream components to become clogged). Any signs of abnormal corrosion or blockage will be removed, its source determined and corrected, and entered into the CAP.

A.1.14 Flow-Accelerated Corrosion Program

The Flow-Accelerated Corrosion (FAC) Program manages loss of material due to wall thinning caused by FAC for carbon steel piping and components by (a) performing an analysis to determine systems subject to FAC, (b) conducting appropriate analysis to predict wall thinning, (c) performing wall thickness measurements based on wall thinning predictions, and (d) evaluating measurement results to determine the remaining service life and the need for replacement or repair of components. Measurement results are also used to confirm predictions and to plan long-term corrective action. The program relies on implementation of guidelines published by the latest revision available of EPRI in NSAC-202L, and internal and external operating experience. The program uses a predictive code for portions of susceptible systems with design and operating conditions that are amenable to computer modeling. Inspections are performed using ultrasonic or other approved testing techniques capable of determining wall thickness. Components predicted to reach the minimum allowed wall thickness before the next scheduled outage are isolated, repaired, replaced, or reevaluated under the corrective action program.

Where applicable, the FAC Program also manages loss of material due to erosion mechanisms of cavitation, flashing, liquid droplet impingement and solid particle erosion for any material in moving fluid environments.

The Flow-Accelerated Corrosion Program has been enhanced as follows.

- Revise Flow-Accelerated Corrosion Program procedures to implement NSAC-202L guidance for examination of components upstream of piping surfaces where significant wear is detected.

- Revise Flow-Accelerated Corrosion Program procedures to implement the guidance in LR-ISG-2012-01, which will include a susceptibility review based on internal operating experience, external operating experience, EPRI TR-1011231, Recommendations for Controlling Cavitation, Flashing, Liquid Droplet Impingement, and Solid Particle Erosion in Nuclear Power Plant Piping, and NUREG/CR-6031, Cavitation Guide for Control Valves. In addition, revise the FAC program procedures to include portions of the Essential Raw Cooling Water (ERCW) piping where Belzona coating is applied. These inspections are to be performed prior to the PEO, and pending results of the inspections, future inspections should be planned as part of the FAC program.

A.1.15 Flux Thimble Tube Inspection Program

The Flux Thimble Tube Inspection Program manages loss of material due to wear of the flux thimble tube walls from the reactor vessel instrument nozzles to the fuel assembly instrument guide tubes. Nondestructive examination methodology such as eddy current testing or other NRC-accepted inspection methods are used. This program implements the recommendations of NRC Bulletin 88-09, "Thimble Tube Thinning in Westinghouse Reactors," in regards to nondestructive examinations such as eddy current testing or other justified and NRC-approved method used to monitor flux thimble tube wear.

The Flux Thimble Tube Inspection Program has been enhanced as follows.

- Revise Flux Thimble Tube Inspection Program procedures to include a requirement to address if the predictive trending projects that a tube will exceed 80 percent wall wear prior to the next planned inspection, then initiate a service request to define actions (i.e., plugging, repositioning, replacement, evaluations, etc.) required to ensure that the projected wall wear does not exceed 80 percent. If any tube is found to be greater than 80 percent through-wall wear, then initiate a service request to evaluate the predictive methodology used and modify as required to define corrective actions (i.e., plugging, repositioning, replacement, etc.).

A.1.16 Inservice Inspection Program

The Inservice Inspection Program manages loss of material, cracking, thermal embrittlement, flaw growth, and reduction in fracture toughness for ASME Class 1, 2, and 3 pressure-retaining components, including welds, pump casings, valve bodies, integral attachments, and pressure-retaining bolting using volumetric, surface, and/or visual examination and leakage testing of ASME Class 1, 2 and 3 component as specified in ASME Section XI code, 2001 Edition 2003 addendum. Additional limitations, modifications, and augmentations described in 10 CFR 50.55a are included as a part of this program. Every ten years this program is updated to the latest ASME Section XI code edition and addendum approved by the NRC in 10 CFR 50.55a. Repair and replacement activities for these components are covered in Subsection IWA of the ASME code edition of record.

The Inservice Inspection Program has been enhanced as follows.

- Revise Inservice Inspection Program procedures to include a supplemental inspection to monitor cracking of Class 1 CASS piping components that do not meet the materials selection criteria of NUREG-0313, Revision 2 with regard to ferrite and carbon content when an inspection technique has been qualified by ASME or EPRI. If an inspection technique has not been qualified by ASME or EPRI prior to the commitment due date, revise program procedures to continue monitoring the development of a qualified inspection technique. Once an ASME or EPRI inspection technique is qualified, revise Inservice Inspection Program procedures to perform the supplemental inspections.

- Inspections will be conducted on a sampling basis. The extent of sampling will be based on the established method of inspection and industry operating experience and practices when the program is implemented, and will include components determined to be limiting from the standpoint of applied stress, operating time and environmental considerations.

- Revise Inservice Inspection Program procedure to monitor the wear of the accessible CRDM housing penetrations in weld examination volume.

- Revise Inservice Inspection Program procedure to perform an examination of the accessible CRDM housing penetration to determine the amount of wear in the area of the thermal sleeve centering pads for Units 1 and 2. The accessible locations consist of the centermost CRDM housing penetrations 1 through 5 on Unit 1 and penetrations 2 through 5 on Unit 2.

- Revise Inservice Inspection Program procedure to estimate the wall thickness of the accessible CRDM housingpenetration wear in the area of the thermal sleeve centering tabs at the end of the next RVH inspection interval and compare this projected wall thickness to the thickness used in Sequoyah design basis analyses to demonstrate validity of the analyses.

- Revise the Inservice Inspection Program procedures to perform an augmented visual inspection of the Unit 1 and Unit 2 CRDM thermal sleeves and a wall thickness measurement of the six thermal sleeves exhibiting the greatest amount of wear. The results of the augmented inspection should be used to project if there is sufficient wall thickness for the PEO, or until the next inspection.

- The ASME Section XI Program procedure which defines the Class 1 components subject to examination will be revised to specifically require a visual examination method VT-3 of the clevis bolts, dowel pins and tack welds as well as the 6 core support pads.

- Evaluate industry operating experience related to CRDM housing penetration wear and initiatives to measure CRDM housing penetration wear and resulting wall thickness. Upon successful demonstration of a wear depth measurement process, SQN will revise Inservice Inspection Program procedures to use the demonstrated process at accessible locations to measure depth of wear on the CRDM housing penetration wall associated with contact with the CRDM thermal sleeve centering pads.

A.1.17 Inservice Inspection – IWF Program

The Inservice Inspection (ISI) – IWF Program performs periodic visual examinations of ASME Class 1, 2, and 3 piping and component supports to determine general mechanical and structural condition or degradation of component supports such as verification of clearances, settings, physical displacements, loose or missing parts, debris, corrosion, wear, erosion, or the loss of integrity at welded or bolted connections. The ISI-IWF Program is implemented through plant procedures which provide administrative controls for the conduct of activities that are necessary to fulfill the requirements of ASME Section XI, as mandated by 10 CFR 50.55a. The monitoring methods are effective in detecting the applicable aging effects, and the frequency of monitoring is adequate to prevent significant degradation.

The ISI-IWF Program is augmented by plant procedures to ensure that the selection of bolting material, installation torque or tension, and the use of lubricants and sealants are appropriate for the intended purpose. These procedures include the guidance of EPRI TR-104213, NUREG-1339, and EPRI NP-5769 to ensure proper specification of bolting material, lubricant, and installation torque.

The ISI-IWF Program has been enhanced as follows.

- Revise ISI-IWF Program procedures to clarify that detection of aging effects will include monitoring anchor bolts for loss of material, loose or missing nuts, and cracking of concrete around the anchor bolts.

- Revise ISI - IWF Program procedures to include the following corrective action guidance.

  When an indication is identified on acomponent support exceeding the acceptance criteria of IWF-3400, but an evaluation concludes the support is acceptable for service, the program shall require examination of additional similar/adjacent supports per IWF-2430 unless the evaluation of the identified condition against similar/adjacent supports concludes that it would not adversely affect the design function of similar adjacent supports. This evaluation will be performed regardless of whether the program owner chooses to perform corrective measures to restore the component to its original design condition, per IWF-3112.3(b) or IWF-3122.3(b).

A.1.18 Inspection of Overhead Heavy Load and Light Load (Related to Refueling) Handling Systems Program

The Inspection of Overhead Heavy Load and Light Load (Related to Refueling) Handling Systems Program performs periodic visual examinations and preventive maintenance to manage loss of material due to corrosion, loose bolting or rivets, and crane rail wear of cranes and hoists, based on industry standards and guidance documents. The program includes structural components, including structural bolting, that make up the bridge, the trolley, lifting devices, and rails in the rail system and includes cranes and hoists that meet the provisions of 10 CFR 54.4(a)(1) and (a)(2) as well as NUREG-0612, "Control of Heavy Loads at Nuclear Power Plants." The activities rely on visual examinations and functional testing to ensure that cranes and hoists are capable of sustaining their rated loads, thus ensuring their intended function is maintained during the period of extended operation.

The Inspection of Overhead Heavy Load and Light Load (Related to Refueling) Handling Systems Program has been enhanced as follows.

- Revise program procedures to specify the inspection scope will include monitoring of rails in the rail system for wear; monitoring structural components of the bridge, trolley and hoists for the aging effect of deformation, cracking, and loss of material due to corrosion; and monitoring structural connections/bolting for loose or missing bolts, nuts, pins or rivets and any other conditions indicative of loss of bolting integrity.

- Revise program procedures to include the inspection requirements of ASME B30.2.

- Revise program procedures to include the inspection frequency requirements of ASME B30.2.

- Revise program procedures to clarify that the acceptance criteria will include requirements for evaluation in accordance with ASME B30.2 of significant loss of material for structural components and structural bolts and significant wear of rail in the rail system.

- Revise program procedures to clarify that the acceptance criteria and maintenance and repair activities use the guidance provided in ASME B30.2.

A.1.19 Internal Surfaces in Miscellaneous Piping and Ducting Components Program

The Internal Surfaces in Miscellaneous Piping and Ducting Components Program manages fouling, cracking, loss of material, and change in material properties using opportunistic visual inspections of the internal surfaces of piping and components during periodic surveillances or maintenance activities when the surfaces are accessible for visual inspection.

This opportunistic approach is supplemented with the following sampling approach.

- In each 10-year period during the period of extended operation (PEO), an assessment will be made of the opportunistic inspections completed during that period for each material-environment-aging effect combination within the scope of this program.
- Directed inspections will be conducted to ensure that an inspection sample size of 20 percent, with a maximum sample size of 25 inspections, is completed for each of these material-environment-aging effect combinations during the 10-year period under review.
- Where practical, inspections shall be conducted at locations that are most susceptible to the effects of aging because of time in service, severity of operating conditions (e.g., low or stagnant flow), and lowest design margin.
- An inspection conducted of a material in a more severe environment may also be credited as an inspection of the same material in a less severe environment.

For metallic components, visual inspection of surface conditions will be used to detect loss of material, fouling and cracking. For elastomeric components, visual inspections and physical manipulation will be used to detect cracking and change in material properties. The program monitors surface condition for visible evidence of loss of material in metallic components and changes in material properties for elastomeric components, including possible evidence of surface discontinuities. Visual examinations of elastomeric components are accompanied by physical manipulation such that changes in material properties are readily observable. The sample size for physical manipulation is at least ten percent of available surface area, including visually identified suspect areas.

Specific acceptance criteria are as follows:

- Stainless steel: clean surfaces, shiny, no abnormal surface condition.
- Metals: no abnormal surface condition.
- Flexible polymers: a uniform surface texture and color with no cracks, no unanticipated dimensional change, and no abnormal surface conditions.
- Rigid polymers: no surface changes affecting performance such as erosion and cracking.
- Specific, measurable, actionable/attainable and relevant acceptance criteria are established in the maintenance and surveillance procedures or are established during engineering evaluation of the degraded condition.

Conditions that do not meet the acceptance criteria are entered into the corrective action program for evaluation. Any indications of relevant degradation will be evaluated using design standards, procedural requirements, current licensing basis, and industry codes or standards.

A.1.20 Masonry Wall Program

The Masonry Wall Program is based on guidance provided in I.E. Bulletin 80-11, "Masonry Wall Design," and Information Notice (IN) 87-67, "Lessons Learned from Regional Inspections of Licensee Actions in Response to I.E. Bulletin 80-11." The scope of the Masonry Wall Program includes masonry walls within the scope of license renewal as delineated in 10 CFR 54.4. The program manages aging effects so that the evaluation basis established for each masonry wall within the scope of license renewal remains valid through the period of extended operation. The program has been implemented as part of the Structures Monitoring Program (Section A.1.40).

The program includes visual inspections of masonry walls identified as performing intended functions in accordance with 10 CFR 54.4. Included components are 10 CFR 50.48-required masonry walls, radiation shielding masonry walls, and masonry walls with the potential to affect safety-related components. Structural steel components, steel edge supports, and steel bracing of masonry walls are managed by the Structures Monitoring Program (Section A.1.40).

Masonry walls are inspected at least once every five years, with provisions for more frequent inspections, to ensure there is no loss of intended function between inspections.

Enhancements to this program are included in the enhancements to the Structures Monitoring Program (Section A.1.40).

A.1.21 Metal Enclosed Bus Inspection Program

The Metal Enclosed Bus Inspection Program is a condition monitoring program that provides for the inspection of the internal and external portions of metal enclosed bus (MEB) to identify age-related degradation of the bus and bus connections, the bus enclosure assemblies, and the bus insulation and insulators. The program will inspect the following MEB requirement for recovery of offsite power: MEB (non-segregated) associated with CSST A, CSST B, CSST C, USST buses (1A, 1B, 2A, 2B), the 6.9 kV start buses (1A, 1B, 2A, 2B) and the MEB (isolated phase) associated with USST 1A, USST 1B, USST 2A, and USST 2B.

MEB enclosure assembly external surfaces will be visually inspected for evidence of loss of material due to general, pitting, and crevice corrosion. Accessible elastomers (e.g., gaskets, boots, and sealants) will be inspected for changed in material properties (elastomer degradation) including surface cracking, crazing, scuffing, dimensional change (e.g., “ballooning” and “necking”), shrinkage, discoloration, hardening, and loss of strength at least once every ten years. This inspection will be performed in this program instead of in the Structures Monitoring Program.

MEB enclosure assemblies will be visually inspected internally for evidence of loss of material. Internal portions of the MEB enclosure assemblies will also be inspected for cracks, corrosion, foreign debris, excessive dust buildup, and evidence of water intrusion. Bus insulation or insulators will be visually inspected for signs of reduced insulation resistance due to thermal/ thermoxidative degradation of organics/thermoplastics, radiation-induced oxidation, moisture/ debris intrusion, or ohmic heating, as indicated by embrittlement, cracking, chipping, melting, swelling, or discoloration

which may indicate overheating or aging degradation. Internal bus supports or insulators are visually inspected for structural integrity and signs of cracks. A sample of accessible bolted connections will be inspected for increased connection resistance at least once every ten years for loose connections using quantitative measurements such as thermography or connection resistance (micro-ohm) measurements. Twenty percent of the population with a maximum sample of 25 constitutes a representative sample size for accessible bolted connections. Otherwise, a technical justification of the methodology and sample size used for selecting components should be included as part of the site documentation. The alternative to quantitative measurements could be used for accessible MEB bolted connections covered with heat shrink tape or insulating boots. A sample of accessible bolted connections covered with heat shrink tape or insulating boots per manufacturer's recommendations can be inspected using the alternate qualitative methods. If the alternate inspection method using visual is the only method performed, the visual inspection must be performed prior to the period of extended operation and at least once every five years for insulation material surface anomalies such as embrittlement, cracking, chipping, melting, discoloration, swelling, or surface contamination. Thermography will be performed on bus connections with the MEB covers in place, only if the bus enclosure is equipped with an IR window to facilitate the inspection.

These inspections were completed before the period of extended operation and every ten years thereafter provided the alternative visual inspection is not used as the only method to inspect a sample of accessible MEB bolted connections. If the alternative visual inspection is used to check a sample of accessible MEB bolted connections, the first inspection was completed prior to the period of extended operation with subsequent inspections every five years thereafter. Newly-installed components will have initial inspections 10 years after installation.

A.1.22 Neutron-Absorbing Material Monitoring Program

The Neutron-Absorbing Material Monitoring Program provides reasonable assurance that degradation of the neutron-absorbing material (Boral) used in spent fuel racks that could compromise the criticality analysis will be detected. The program relies on periodic inspection, testing, and other monitoring activities to assure that the required five percent sub-criticality margin is maintained during the period of extended operation.

The Neutron-Absorbing Material Monitoring Program has been enhanced as follows:

- Revise Neutron-Absorbing Material Monitoring Program procedures to perform blackness testing of the Boral coupons within the ten years prior to the period of extended operation and at least every ten years thereafter based on initial testing to determine possible changes in boron-10 areal density.

- Revise Neutron-Absorbing Material Monitoring Program procedures to relate physical measurements of Boral coupons to the need to perform additional testing.

- Revise Neutron-Absorbing Material Monitoring Program procedures to perform trending of coupon testing results to determine the rate of degradation and to take action as needed to maintain the intended function of the Boral.

A.1.23 Nickel Alloy Inspection Program

The Nickel Alloy Inspection Program manages cracking due to primary water stress corrosion cracking (PWSCC) for nickel-alloy components and loss of material due to boric acid-induced corrosion in susceptible safety-related components in the vicinity of nickel-alloy reactor coolant pressure boundary components as described in 10 CFR 50.55a. It provides (a) inspection requirements for the PWR vessel, pressurizer components, and piping that contain PWSCC-susceptible dissimilar metals (Alloys 600/82/182) and (b) inspection requirements for reactor coolant pressure boundary components.

The program monitors for reactor coolant pressure boundary cracking and leakage using various methods, including NDE techniques, radiation monitoring, and visual insections for boric acid deposits, leakage, or the presence of moisuture to identify cracking in the reactor coolant pressure boundary or loss of material. Inspection methods, schedules and frequencies for susceptible components are implemented in accordance with 10 CFR50.55a. Reactor coolant leakage is calculated and trended on a routine basis in accordance with technical specifications. The acceptance criteria for identified flaws and the methodology for evaluating the flaws is prescribed in 10 CFR 50.55a. Unacceptable indications of flaws are corrected through implementation of appropriate repair or replacement as dictated in 10 CFR 50.55a.

A.1.24 Non-EQ Cable Connections Program

The Non-EQ Cable Connections Program is a one-time inspection program that provides reasonable assurance that the intended functions of the metallic parts of electrical cable connections are maintained consistent with the current licensing basis through the period of extended operation. Cable connections included are those connections susceptible to age-related degradation resulting in increased resistance of connection due to thermal cycling, ohmic heating, electrical transients, vibration, chemical contamination, corrosion, or oxidation that are not subject to the environmental qualification requirements of 10 CFR 50.49.

This program provides for one-time inspections that were completed prior to the period of extended operation on a sample of connections. The factors considered for sample selection will be application (medium and low voltage, defined as < 35 kV), circuit loading (high loading), connection type, and location (high temperature, high humidity, vibration, etc.). The representative sample size will be based on twenty percent of the connection population with a maximum sample of 25. Inspection methods may include thermography, contact resistance testing, or other appropriate quantitative test methods without removing the connection insulation, such as heat shrink tape, sleeving, insulating boots, etc., based on plant configuration and industry guidance.

A.1.25 Non-EQ Inaccessible Power Cables (400 V to 35 kV) Program

The Non-EQ Inaccessible Power Cables (400 V to 35 kV) Program manages the aging effect of reduced insulation resistance on the inaccessible power (400 V to 35 kV) cable systems that have a license renewal intended function.

APPENDIX A

The cables to be included in this program are routed underground and are connected to the 6.9 kV yard area common board, the 6.9 kV shutdown boards, the 6.9 kV start buses (1B and 2B only), and the 480 V shutdown boards.

Non-EQ Underground Power Cable (400 V to 35 kV) Circuits That Require an AMP

Equipment ID	Voltage Level	Description
6.9 kV Start Buses		
0-BCTA-202-CL/1414	6900 V	6.9kV CSST “C” X-Winding MEB termination box to 6.9 kV Start Bus 2B
0-BCTA-202-CL/1418	6900 V	6.9kV CSST “C” Y-Winding MEB termination box to 6.9 kV Start Bus 1B
6.9 kV Yard Area Common Board		
0-BCTA-202-CY/19	6900 V	6.9 kV YD Area Comm BD to HPFP XFMR (0-XFA-201-EA/01)
0-BCTA-202-CY/1711	6900 V	Feeder from CSST D to the 6.9 kV YD Area Comm BD
6.9 kV Shutdown Boards		
1-BCTA-202-CM/6-A	6900 V	Shutdown Bd 1A-A Emergency Feeder from Diesel Generator 1A-A
SQN-0-MTRA-067-0460-A 0-BCTA-67-460-A	6900 V	ERCW Pump Q-A
SQN-0-MTRA-067-0432-A 0-BCTA-67-432-A	6900 V	ERCW Pump J-A
1-BCTA-202-CM/22-A	6900 V	To 480 V XFMR 1A-A at ERCW Pump Station
1-BCTA-202-CN/6-B	6900 V	Shutdown Bd 1B-B Emergency Feeder from Diesel Generator 1B-B
SQN-0-MTRA-067-0452-B 0-BCTA-67-452-B	6900 V	ERCW Pump N-B
SQN-0-MTRA-067-0440-B 0-BCTA-67-440-B	6900 V	ERCW Pump L-B
1-BCTA-202-CN/22-B	6900 V	To 480 V XFMR 1B-B at ERCW Pump Station
2-BCTA-202-CO/6-A	6900 V	Shutdown Bd 2A-A Emergency Feeder from Diesel Generator 2A-A
SQN-0-MTRA-067-0436-A 0-BCTA-67-436-A	6900 V	ERCW Pump K-A

APPENDIX A

Equipment ID	Voltage Level	Description
SQN-0-MTRA-067-0464-A 0-BCTA-67-464-A	6900 V	ERCW Pump R-A
2-BCTA-202-CO/22-A	6900 V	To 480 V XFMR 2A-A at ERCW Pump Station
2-BCTA-202-CP/6-B	6900 V	Shutdown Bd 2B-B Emergency Feeder from Diesel Generator 2B-B
SQN-0-MTRA-067-0444-B 0-BCTA-67-444-B	6900 V	ERCW Pump M-B
SQN-0-MTRA-067-0456-B 0-BCTA-67-456-B	6900 V	ERCW Pump P-B
2-BCTA-202-CP/22-B	6900 V	To 480 V XFMR 2B-B at ERCW Pump Station
480 V Shutdown Boards		
1-BCTB-201-DJ/11B-A	480 V	Feeder for 480 V Diesel Aux BD 1A1-A (NOR) & 1A2-A (ALT)
2-BCTB-201-DN/11B-A	480 V	Feeder for 480 V Diesel Aux BD 2A1-A (NOR) & 2A2-A (ALT)
1-BCTB-201-DK/11C-A	480 V	Feeder for 480 V Diesel Aux BD 1A2-A (NOR) & 1A1-A (ALT)
2-BCTB-201-DO/11C-A	480 V	Feeder for 480 V Diesel Aux BD 2A2-A (NOR) & 2A1-A (ALT)
1-BCTB-201-DL/11B-B	480 V	Feeder for 480 V Diesel Aux BD 1B1-B (NOR) & 1B2-B (ALT)
2-BCTB-201-DP/11B-B	480 V	Feeder for 480 V Diesel Aux BD 2B1-B (NOR) & 2B2-B (ALT)
1-BCTB-201-DM/11B-B	480 V	Feeder for 480 V Diesel Aux BD 1B2-B (NOR) & 1B1-B (ALT)
2-BCTB-201-DQ/11B-B	480 V	Feeder for 480 V Diesel Aux BD 2B2-B (NOR) & 2B1-B (ALT)
0-BCTB-26-1A-A	480 V	Fire / Flood Pump A-A (0-PMP-026-0001A-A) BD 1A2-A ONLY
0-BCTB-26-11A-B	480 V	Fire / Flood Pump B-B (0-PMP-026-0011A-B) BD 2B2-B ONLY

The program includes periodic actions to prevent inaccessible cables from being exposed to significant moisture. Significant moisture is defined as periodic exposures to moisture that last more than a few days (e.g., cable wetting or submergence in water). In this program, inaccessible power (400 V to 35 kV) cables exposed to significant moisture are tested at least once every six years to provide an indication of the condition of the cable insulation properties. Test frequencies

are adjusted based on test results and operating experience. The specific type of test performed is a proven test for detecting deterioration of the cable insulation. One or more proven, commercially available tests techniques will be used for detecting deterioration of the insulation system due to wetting or submergence for inaccessible power cables (400 V to 35 kV) included in this program, such as dielectric loss (dissipation factor/power factor), AC voltage withstand, partial discharge, step voltage, time domain reflectometry, insulation resistance and polarization index, line resonance analysis, or other testing that is state-of-the-art at the time the tests are performed. The program includes periodic inspections for water accumulation in manholes based on evaluations of inspection results. The inspections will include direct observation that cables are not wetted or submerged, that cables, splices and cable support structures are intact, and dewatering systems (i.e., sump pumps) and associated alarms, if applicable, operate properly. In addition, the operability of the dewatering sysems (sump pumps) will also be verified through monthly inspection of the water levels in the in-scope manholes and handholes, and through follow-up evaluation and corrective action if any abnormal water intrusion issues are identified. Abnormal water intrusion is defined as either an increasing trend of water levels in a particular manhole/handhole, or a manhole/handhole where the power cables are or have been submerged. Both Maintenance and Engineering have corrective actions to perform if abnormal water levels are found in a manhole or handhole. In addition to the periodic manhole inspections, manhole inspections for water after event-driven occurrences, such as flooding, will be performed. Inspection frequency will be increased as necessary based on evaluation of inspection results.

A.1.26 Non-EQ Instrumentation Circuits Test Review Program

The Non-EQ Instrumentation Circuits Test Review Program manages the aging effects of the applicable cables in the neutron monitoring and process radiation monitoring systems or sub-systems.

- Neutron Monitoring: Excore Power Range
- Process Radiation Monitoring:
  - ► Containment building purge exhaust monitors
  - ► Fuel pool air space monitors
  - ► Main control room air intake monitors: emergency
  - ► Main control room air intake monitors: normal

The program provides reasonable assurance the intended functions of sensitive, high-voltage, low-signal cables exposed to adverse localized equipment environments caused by heat, radiation and moisture (i.e., neutron flux monitoring instrumentation and process radiation monitoring) can be maintained consistent with the current licensing basis through the period of extended operation. Most sensitive instrumentation circuit cables and connections are included in the instrumentation loop calibration at the normal calibration frequency, which provides sufficient indication of the need for corrective actions based on acceptance criteria related to instrumentation loop performance. The review of calibration results or findings of surveillance testing programs will be performed once

every ten years, with the first review occurring before the period of extended operation. For sensitive instrumentation circuit cables that are disconnected during instrument calibrations, testing using a proven method for detecting deterioration for the insulation system (such as insulation resistance tests or time domain reflectometry) will occur at least once every ten years, with the first test occurring before the period of extended operation. Applicable industry standards and guidance documents are used to delineate the program.

A.1.27 Non-EQ Insulated Cables and Connections Program

The Non-EQ Insulated Cables and Connections Program provides reasonable assurance the intended functions of insulated cables and connections exposed to adverse localized environments caused by heat, radiation and moisture can be maintained consistent with the current licensing basis through the period of extended operation. An adverse localized environment is a condition in a limited plant area that is significantly more severe than the plant design environment for the cable or connection insulation materials.

Accessible insulated cables and connections within the scope of license renewal installed in an adverse localized environment will be visually inspected for cable and connection jacket surface anomalies such as embrittlement, discoloration, cracking, melting, swelling, or surface contamination. The program sample consists of all accessible cables and connections in localized adverse environments. This program sample of accessible cables will represent, with reasonable assurance, all cables and connections in the adverse localized environment.

An adverse localized equipment environment is a plant-specific condition that will be determined based on a plant spaces approach. The plant spaces approach provides for a review of all buildings and rooms in the scope of license renewal to determine potential adverse localized environments. The determination of a potential adverse localized equipment environment will be based on the most limiting temperature, radiation, or moisture conditions for the cables and connection insulation material located at SQN. The evaluation of an adverse localized equipment environment will be based on the most limiting temperature, radiation or moisture conditions for the cables and connection insulation material located within that plant space that has a potential adverse localized equipment environment.

This program will visually inspect accessible cables in an adverse localized environment at least once every ten years, with the first inspection prior to the period of extended operation.

A.1.28 Oil Analysis Program

The Oil Analysis Program ensures that loss of material, cracking, and fouling are not occurring by maintaining the quality of lubricating oil. The program ensures that contaminants (primarily water and particulates) are within acceptable limits. Testing activities include sampling and analysis of lubricating oil for detrimental contaminants. Testing results indicating presence of water in oil samples initiate corrective action that may include evaluating for in-leakage.

The One-Time Inspection Program utilizes inspections or nondestructive evaluations of representative samples to verify that the Oil Analysis Program has been effective at managing the aging effects of loss of material, cracking and fouling.

A.1.29 One-Time Inspection Program

The One-Time Inspection Program consists of a one-time inspection of selected components to accomplish the following:

- Verify the effectiveness of AMPs designed to prevent or minimize the effects of aging to the extent that they will not cause the loss of intended function during the period of extended operation. The aging effects evaluated are loss of material, cracking, and fouling.

- Confirm the insignificance of an aging effect for situations in which additional confirmation is appropriate using inspections that verify unacceptable degradation is not occurring.

- Trigger additional actions if necessary to ensure the intended functions of affected components are maintained during the period of extended operation.

For components managed by Diesel Fuel Monitoring Program (Section A.1.8), Oil Analysis Program (Section A.1.28), and Water Chemistry Program (Section A.1.43), determination of the sample size will be based on 20 percent of the components in each material-environment-aging effect group up to a maximum of 25 components. Otherwise, a technical justification of the methodology and sample size used for selecting components for one-time inspection should be included as part of the programs's documentation. The sample size of components to be inspected will also be based on an assessment of operating experience. Identification of inspection locations will be based on the potential for the aging effect to occur. Examination techniques will be established NDE methods with a demonstrated history of effectiveness in detecting the aging effect of concern, including visual, ultrasonic, and surface techniques. Acceptance criteria will be based on applicable ASME or other appropriate standards, design basis information, or vendor-specified requirements and recommendations. The need for follow-up examinations will be evaluated based on inspection results.
The One-Time Inspection Program will not be used for structures or components with known age-related degradation mechanisms or when the environment in the period of extended operation is not expected to be equivalent to that in the prior 40 years.

APPENDIX A

The following table identifies parameters monitored and inspection methods for specific aging effects.

Aging Effect	**Aging Mechanism**	**Parameter(s) Monitored**	**Inspection Method**
Loss of material	Crevice corrosion	Surface condition Wall thickness	Visual (VT-1 or equivalent) and/or volumetric (ultrasonic testing [UT])
Loss of material	Galvanic corrosion	Surface condition Wall thickness	Visual (VT-3 or equivalent) and/or volumetric (UT)
Loss of material	General corrosion	Surface condition Wall thickness	Visual (VT-3 or equivalent) and/or volumetric (UT)
Loss of material	MIC	Surface condition Wall thickness	Visual (VT-3 or equivalent) and/or volumetric (UT)
Loss of material	Pitting corrosion	Surface condition Wall thickness	Visual (VT-1 or equivalent) and/or volumetric (UT)
Loss of material	Erosion	Surface condition Wall thickness	Visual (VT-1 or equivalent) and/or volumetric (UT)
Loss of material	Wear	Wall thickness	Eddy current
Reduction of heat transfer	Fouling	Surface condition	Visual (VT-3 or equivalent)
Cracking	SCC or cyclic loading	Surface condition	Enhanced visual (EVT-1 or equivalent) or surface examination (magnetic particle, liquid penetrant) or volumetric (radiographic testing or UT)

The program will include activities to verify effectiveness of aging management programs and activities to confirm the insignificance of aging effects as described below.

Diesel Fuel Monitoring Program (Section A.1.8)	One-time inspection activity will verify the effectiveness of the Diesel Fuel Monitoring Program by confirming that unacceptable loss of material is not occurring.
Oil Analysis Program (Section A.1.28)	One-time inspection activity will verify the effectiveness of the Oil Analysis Program by confirming that unacceptable cracking, loss of material, and fouling is not occurring.
Water Chemistry Control Program (Section A.1.43)	One-time inspection activity will verify the effectiveness of the Water Chemistry Control Primary and Secondary Program by confirming that unacceptable cracking, loss of material, and fouling is not occurring.
Reactor vessel flange leak-off lines	One-time inspection activity and subsequent evaluation will confirm that cracking and loss of material are not occurring or are occurring so slowly that they will not affect the component intended function during the period of extended operation.
Internal surfaces of the containment spray piping water seal area at water line region	One-time inspection activity and subsequent evaluation will confirm that cracking is not occurring or is occurring so slowly that it will not affect the component intended function during the period of extended operation.
External surfaces of RHR heat exchanger tubes	One-time inspection activity and subsequent evaluation will confirm that loss of material is not occurring or is occurring so slowly that it will not affect the component intended function during the period of extended operation.

A.1.30 One-Time Inspection – Small-Bore Piping Program

The One-Time Inspection – Small-Bore Piping Program augments ASME Code, Section XI requirements and is applicable to small-bore ASME Code Class 1 piping and components with a nominal pipe size diameter less than 4 inches (NPS < 4) and greater than or equal to NPS 1 in systems that have not experienced cracking of ASME Code Class 1 small-bore piping. The program can also be used for systems that have experienced cracking but have implemented design changes to effectively mitigate cracking.

The program provides a one-time volumetric or opportunistic destructive inspection of a three percent sample or maximum of ten ASME Class 1 piping butt weld locations and a three percent sample or a maximum of ten ASME Class 1 socket weld locations that are susceptible to cracking. Volumetric examinations are performed using a demonstrated technique that is capable of detecting the aging effects in the volume of interest. In the event the opportunity arises to perform a destructive examination of an ASME Class 1 small-bore socket weld that meets the susceptibility criteria, then the program takes credit for two volumetric examinations. The program includes pipes, fittings, branch connections, and full and partial penetration welds.

This program includes a sampling approach. Sample selection is based on susceptibility to stress corrosion, cyclic loading (including thermal, mechanical, and vibration fatigue), thermal stratification,

thermal turbulence, dose considerations, operating experience, and limiting locations of total population of ASME Class 1 small-bore piping locations.

The program includes measures to verify that degradation is not occurring, thereby either confirming that there is no need to manage age-related degradation or validating the effectiveness of any existing program for the period of extended operation. If evidence of cracking is revealed by this one-time inspection, follow-up periodic inspection will be managed by a plant-specific program.

A.1.31 Periodic Surveillance and Preventive Maintenance Program

The Periodic Surveillance and Preventive Maintenance (PSPM) Program manages for specific components' aging effects not managed by other aging management programs, including loss of material, fouling, cracking, loss of coating integrity, and change in material properties.

Each inspection occurs at least once every five years, with the exception of the Emergency Diesel Generator Starting Air Aluminum Valves (since the valves are replaced prior to 5 years of service) and coating inspections for which frequency is based on coating condition. For each activity that refers to a representative sample, with the exception of coating inspection activities related to piping, a representative sample is 20 percent of the population (defined as components having the same material, environment, and aging effect combination) with a maximum of 25 components. For coated piping, a representative sample is 50% of in-scope coated piping systems or an area equivalent to the entire interior surface of 73 1-foot piping segments for each combination of type of coating, substrate material, and environment.

Internal Service Level III or Other Coatings

For in-scope components that have internal Service Level III or Other coatings, initial inspections will begin no later than the last scheduled refueling outage prior to the PEO. Subsequent inspections will be performed based on the initial inspection results.

Credit for program activities has been taken in the aging management review of systems, structures and components as described below.

- Prior to the PEO, perform a visual inspection of a 50% sample of the coated piping in each of the following coated piping systems or an area equivalent to the entire inside surface of 73 1-foot piping segments for each combination of type of coating, substrate material , and environment. Inspection location selection will be based on an evaluation of the effect of a coating failure on component intended function, potential problems identified during prior inspections, and service life history. Visually inspect the surface condition of the coated components to manage loss of coating integrity due to cracking, debonding, delamination, peeling, flaking, and blistering. In addition, if coatings are credited for corrosion prevention, the base material (in the vicinity of delamination, peeling, or blisters where base metal has been exposed) will be inspected to determine if corrosion has occurred.

Piping

i. High pressure fire protection (cement lined piping)

- Prior to the PEO, perform a visual inspection of the following coated tanks and heat exchangers. Visually inspect the surface condition of the coated components to manage loss of coating integrity due to cracking, debonding, delamination, peeling, flaking, and blistering. For the Condensate Storage Tanks, blisters should be limited to a few intact small blisters that are completely surrounded by sound coating/lining bonded to the substrate. Coatings/linings that do not meet acceptance criteria are repaired, replaced, or removed. If a blister is not repaired, physical testing is conducted to ensure that the blister is completely surrounded by sound coating/lining bonded to the surface. Physical testing consists of adhesion testing using ASTM International Standards endorsed in RG 1.54.

Tanks

i. Safety injection lube oil reservoir (where 0.006 inch plastic coating applied)
ii. EDG 7 day fuel oil storage (where Belzona applied)
iii. Condensate storage tanks

Heat Exchangers

i. Electric board room chiller packages (where Belzona applied)
ii. Incore instrument room water chiller package B (where Belzona applied)

- Include the following loss of coating integrity acceptance criteria (1) peeling and delamination are not permitted, (2) cracking is not permitted if accompanied by delamination or loss of adhesion, and (3) blisters are limited to intact blisters that are completely surrounded by sound coating bonded to the surface. If delamination, peeling, or blisters are detected, follow-up physical testing will be performed where physically possible (i.e., sufficient room to conduct testing) on at least three locations. The testing will consist of destructive or nondestructive adhesion testing using ASTM International standards endorsed in Regulatory Guide 1.54.

- Ensure coating inspections are performed by individuals certified to ANSI N45.2.6, "Qualifications of Inspection, Examination, and Testing Personnel for Nuclear Power Plants," and that subsequent evaluation of inspection findings is conducted by a nuclear coatings subject matter expert qualified in accordance with ASTM D 7108-05, "Standard Guide for Establishing Qualifications for a Nuclear Coatings Specialist."

  - Ensure an individual knowledgeable and experienced in nuclear coatings work will prepare a coating report that includes a list of locations identified with coating deterioration including, where possible, photographs indexed to inspection location, and a prioritization of the repair areas into areas that must be repaired before returning the system to service and areas where coating repair can be postponed to the next inspection.

APPENDIX A

- With the exception of the EDG 7-day fuel oil tanks, perform subsequent inspections of coatings based on the following.

  i. If no flaking, debonding, peeling, delamination, blisters, or rusting are observed, and any cracking and flaking has been found acceptable, subsequent inspections will be performed at least once every six years. If the coating is inspected on one train and no indications are found, the same coating on the redundant train would not be inspected during that inspection interval.
  ii. If the inspection results do not meet (i), yet a coating specialist has determined that no remediation is required, then subsequent inspections will be conducted every other refueling outage.
  iii. If coating degradation is observed that required newly installed coatings, subsequent inspections will occur during each of the next two refueling outage intervals to establish a performance trend on the coating.

  EDG 7-day fuel oil tanks coating inspection:
  Subsequent coating inspections for the EDG 7-day fuel oil tanks will be at the same 10 year interval as TS Surveillance Requirement 4.8.1.1.2.f. If any applied Belzona coating on the interior of the fuel oil tanks is peeling, delaminating, or blistering, then the condition will be repaired and entered into the CAP. Given the favorable SQN experience with the current Belzona repairs, it is justifiable to repair the existing coating applied to localized pits with Belzona and not inspect the coating for another 10 years, provided a detached Belzona engineering transportability evaluation has determined that the amount of Belzona applied will not migrate from the EDG 7-day tank to the day-tank. The evaluation will consider Belzona's 2.5 to 3 times higher specific gravity than diesel fuel, potential size of loosened Belzona particles, surface area and depth of the applied Belzona, diesel fuel fluid velocity in the immediate area of the applied Belzona, proximity of the repaired area to the suction line, and other factors.

  The application of Belzona to repair additional localized pitting in the 7-day EDG fuel oil tanks in the future will be installed per vendor specifications. An engineering evaluation will be performed to ensure that that additional Belzona cannot be transferable out of the tank during the interval between tank inspections and to determine if the interval of inspections should meet the more frequent inspection guidelines of LR-ISG-2013-01, or the NRC approved TS Surveillance Requirement of 10 years. The engineering transportability evaluation will considerfactors such as specific gravity, size, depth, surface area, and fluid velocity in the evaluation.

APPENDIX A

Miscellaneous Aging Management Inspections

- Pressure test the divider barrier seal test coupon, and manually flex and visually monitor the surface condition of elastomeric components related to the seal between the upper and lower compartments (divider barrier) in reactor building to verify the absence of cracks, loss of material, and change in material properties.

- Replace the standby diesel generator starting air aluminum valve bodies prior to 5 years of service.

  Perform EVT-1 visual inspection of the surface condition to monitor for cracks in the standby DG exhaust expansion joint.

- Visually inspect the inside and outside surface condition of the component cooling carbon steel spool piece exposed to air – indoor to manage loss of material. In addition, for component cooling carbon steel piping exposed to stagnant treated water > 130ºF, perform sample inspection using ultrasonic testing (UT) to ensure no cracks.

- Use visual or other NDE techniques to inspect internal surfaces of fire pump B diesel engine heat exchanger copper alloy tubes exposed to raw water to manage fouling.
- Visually inspect the inside surface condition of carbon steel and stainless steel RCP oil collection piping exposed to waste lube oil to manage loss of material.
- For ESF room coolers, perform air flow testing to manage fouling for copper alloy tubes and fins. Perform an inspection of the heat exchanger (tubes) surface condition to manage loss of material. Perform an EVT-1 visual inspection of the surface condition of a representative sample of aluminum valve bodies to verify the absence of cracking due to stress corrosion/IGA. Visually inspect surface condition of fan housing and exhaust fan cover surface condition to manage loss of material.
- Perform an air-side visual inspection of the surface condition of the auxiliary controlled air system after-cooler copper alloy tubes/fins for debris.
- Perform a flow rate monitoring of the charging pump mini-flow orifices for evidence of erosion in the chemical and volume control system.
- Use visual or other NDE techniques to inspect the surface condition of the waste disposal stainless steel piping in the water line region in the containment floor and equipment sumps to manage the potential accelerated loss of material.
- Visually inspect the inside and outside surface condition of the carbon steel essential raw cooling water spool pieces exposed to air – indoor to manage loss of material.

APPENDIX A

Recurring Corrosion Inspections

- Perform wall thickness measurements using UT or other suitable techniques at selected locations to identify loss of material due to microbiologically Influenced corrosion (MIC) in carbon steel piping components exposed to raw water in the following systems.
    - System 24 – Raw cooling water
    - System 25 – Raw service water
    - System 26 – High Pressure Fire Protection
    - System 27 – Condenser circulating water
    - System 67 – Essential raw cooling water

  Choose selected locations based on pipe configuration, flow conditions and operating history to represent a cross-section of potential MIC sites. Periodically review the selected locations to validate their relevance and usefulness, and modify accordingly.

  Compare wall thickness measurements to nominal wall thickness or previous measurements to determine rates of corrosion degradation. Compare wall thickness measurements to minimum allowable wall thickness (T_{min}) to determine acceptability of the component for continued use. Perform subsequent wall thickness measurements at intervals determined for each selected location based on the rate of corrosion and expected time to reach T_{min}. Perform a minimum of five MIC degradation inspections per year until the rate of MIC corrosion occurrences no longer meets the criteria for recurring internal corrosion.

  If more than one MIC-caused leak or a wall thickness less than T_{min} is identified in the yearly inspection period, an additional five MIC inspections over the following 12 month period will be performed for each MIC leak or finding of wall thickness less than T_{min}. The total number of inspections need not exceed a total of 25 MIC inspections per year.

  Prior to the period of extended operation, select a method (or methods) from available technologies for inspecting internal surfaces of buried piping that provides suitable indication of piping wall thickness for a representative set of buried piping locations to supplement the set of selected inspection locations.

Non-Safety Related Systems Affecting Safety Related Systems Inspections

- Visually inspect the internal surface condition of a representative sample of components in the following material, environment, and aging effect combinations:
  -Aluminum in Waste Water for Loss of Material
  -System 059/959
  -Carbon Steel in Air-Indoor for Loss of Material
  -Systems 030, 031, 044, 300, 311, 312 and 313
  -Carbon Steel in Raw Water for Loss of Material
  -System 024

-Carbon Steel in Waste Water for Loss of Material
  -System 001
  -System 012
  -System 015
  -System 024

  -Systems 030, 031, 044, 300, 311, 312 and 313
  -System 037
  -System 043
  -System 059/959
  -System 062
  -System 067
  -System 070
  -System 077
  -System 087
  -System 090
-Copper Alloy in Waste Water for Loss of Material

  -Systems 030, 031, 044, 300, 311, 312 and 313
-Stainless Steel in Raw Water for Loss of Material
  -System 024
-Stainless Steel in Waste Water for Loss of Material
  -System 001
  -System 012
  -System 015
  -System 024

  -System 043
  -System 059/959
  -System 062
  -System 067
  -System 070
  -System 077
  -System 081
  -System 087

- Visually inspect the interior and exterior surface of the fire/flood mode carbon steel pumps and piping and piping components exposed to raw water to manage loss of material.

- Visually inspect the internal surface condition of stainless steel station drainage and sewage (040/305) piping to manage loss of material.

- Perform wall-thickness evaluations of carbon steel filter housings, piping, pump casings, tank, and valve bodies in the waste disposal system (System 077) associated with the cask decontamination collector tank (CDCT) to identify loss of material.

The PSPM Program has been enhanced as follows.

Revise PSPM Program procedures as necessary to assure that the effects of aging will be managed such that applicable components will continue to perform their intended functions consistent with the current licensing basis through the period of extended operation.

A.1.32 Protective Coating Monitoring and Maintenance Program

The Protective Coating Monitoring and Maintenance Program monitors and maintains Service Level I coatings applied to carbon steel and concrete surfaces inside containment (e.g., steel containment vessel shell, structural steel, supports, penetrations, and concrete walls and floors). The program serves to prevent or minimize loss of material due to corrosion of carbon steel components and aids in decontamination. The program addresses accessible coated surfaces inside containment. The SQN program was developed based on the guidance contained in NRC RG 1.54, Revision 0; however, the program will be enhanced to meet the technical basis of Regulatory Position C4 in NRC RG 1.54, Revision 2, and ASTM D 5163-08. With these enhancements, the program provides an effective method to assess coating condition through visual inspections by identifying degraded or damaged coatings and providing a means for repair of identified problem areas.

Service Level I protective coatings are not credited to manage the effects of aging. Proper monitoring and maintenance of protective coatings inside containment ensures operability of post-accident safety systems that rely on water recycled through the containment. The proper monitoring and maintenance of Service Level I coatings ensures there is no coating degradation that would impact safety functions, for example, by clogging emergency core cooling systems suction strainers, reducing flow through the system and possibly causing unacceptable head loss for the pumps.

The Protective Coating Monitoring and Maintenance Program has been enhanced as follows.

- Revise Protective Coating Monitoring and Maintenance Program procedures to clarify that detection of aging effects will include inspection of coatings near sumps or screens associated with the emergency core cooling system.

- Revise Protective Coating Monitoring and Maintenance Program procedures to clarify that instruments and equipment needed for inspection may include, but not be limited to, flashlights, spotlights, marker pen, mirror, measuring tape, magnifier, binoculars, camera with or without wide-angle lens, and self-sealing polyethylene sample bags.

- Revise Protective Coating Monitoring and Maintenance Program procedures to clarify that the last two performance monitoring reports pertaining to the coating systems will be reviewed prior to the inspection or monitoring process.

A.1.33 Reactor Head Closure Studs Program

The Reactor Head Closure Studs Program manages cracking and loss of material for reactor head closure studs using inservice inspection (ASME Section XI 2001 Edition 2003 Addendum Table IWB-2500-1) and preventive measures to mitigate cracking. The program also relies on

recommendations to address reactor head closure studs degradation listed in NUREG-1339 and NRC Regulatory Guide 1.65.

The Reactor Head Closure Studs Program has been enhanced as follows.

- Revise Reactor Head Closure Studs Program procedures to ensure that replacement studs are fabricated from bolting material with actual measured yield strength less than 150 ksi.

- Revise Reactor Head Closure Studs Program procedures to exclude the use of molybdenum disulfide (MoS_2) on the reactor vessel closure studs and to refer to Reg. Guide 1.65, Rev. 1.

A.1.34 Reactor Vessel Internals Program

The Reactor Vessel Internals Program includes reactor vessel internal components for SQN Unit 1 and Unit 2, which are Westinghouse NSSS design, with the exception of fuel assemblies, reactivity control assemblies, nuclear instrumentation, and welded attachments to the reactor vessel. The program performs the following: (1) manages cracking, loss of material, reduction of fracture toughness, change in dimension and loss of preload for reactor vessel internal components intended to provide core support; (2) consistent with a living program implements applicable NEI 03-08 guidance (e.g. Electric Power Research Institute (EPRI) “Materials Reliability Program (MRP): Pressurized Water Reactor Internals Inspection and Evaluation Guidelines (MRP-227) and MRP: Inspection Standard for PWR Internals (MRP-228); (3) incorporates “acceptance criteria” recommendations from Section 3.1.2.2 of NUREG-1800; (4) discusses how to disposition nonconforming reactor vessel internals components; (5) incorporates the definition of sampling-based condition monitoring found in NRC Branch Technical Position RSLB-1; and (6) uses a four-step ranking process (i.e., primary, expansion, existing and no additional measure components).

The result of the four-step sample selection process is a set of primary internals component locations for the SQN reactor vessel internals design that are expected to show leading indications of the degradation effects, with another set of expansion internals component locations that are specified to expand the sample should the indications be more severe than anticipated. The degradation of the third set of internals locations are deemed to be adequately managed by existing programs, such as American Society of Mechanical Engineers (ASME) Code Section XI Examination Category B-N-3, examinations of core support structures. A fourth set of internal locations are deemed to require no additional measures. This process used appropriate component functionality criteria, age-related degradation susceptibility criteria, and failure consequences criteria to identify the components that will be inspected under the program. Consequently, the sample selection process is adequate to assure that the intended functions of the reactor internal components are maintained during the period of extended operation.

The program uses inspection techniques consistent with MRP-227-A and MRP-228.

The Reactor Vessel Internals Program has been enhanced as follows.

- Revise Reactor Vessel Internals Program procedures to perform direct measurement of Unit 1 304 SS hold down spring height within three cycles of the beginning of the period of extended operation. If the first set of measurements is not sufficient to determine life, spring height measurements must be taken during the next two outages, in order to extrapolate the expected spring height to 60 years.

- Revise Reactor Vessel Internals Program procedures to include preload acceptance criteria for the Type 304 stainless steel hold-down spring in Unit 1.

A.1.35 Reactor Vessel Surveillance Program

The Reactor Vessel Surveillance Program manages reduction of fracture toughness and long-term operating conditions for reactor vessel beltline materials using material data and dosimetry. The program includes all reactor vessel beltline materials as defined by 10 CFR 50 Appendix G, Section II.F, and complies with 10 CFR 50, Appendix H for vessel material surveillance. In addition, the program will consider reduction in fracture toughness and long-term operating conditions for the area outside the beltline.

The objective of the Reactor Vessel Surveillance Program is to provide sufficient material data and dosimetry to (a) monitor irradiation embrittlement at the end of the period of extended operation and (b) determine the need for operating restrictions on the inlet temperature, neutron spectrum, and neutron flux. If surveillance capsules are not withdrawn during the period of extended operation, operating restrictions are specified to ensure that the plant is operated under the conditions to which the surveillance capsules were exposed. Capsules removed from the reactor vessel are tested and reported in accordance with ASTM E 185-82 to the extent practicable for the configuration of the specimens in the capsule.

The Reactor Vessel Surveillance Program has been enhanced as follows.

- Revise Reactor Vessel Surveillance Program procedures to consider the area outside the beltline such as nozzles, penetrations and discontinuities to determine if more restrictive

pressure-temperature limits are required than would be determined by just considering the reactor vessel beltline materials.

- B.1 Revise Unit 2 Reactor Vessel Surveillance Program procedures to incorporate an NRC-approved schedule for capsule withdrawals to meet ASTM-E185-82 requirements, including the possibility of operation beyond 60 years (refer to the TVA letter to NRC, “Sequoyah Nuclear Plant – Request To Revise The Reactor Pressure Vessel Surveillance Capsule Withdrawal Schedule for Unit 2” dated 12/23/16, ML16362A207; NRC final safety evaluation report approved on 12/04/17, ML17317A608).

- Revise Unit 1 Reactor Vessel Surveillance Program procedures to incorporate an NRC-approved schedule for capsule withdrawals to meet ASTM E 185-82 requirements, including the possibility of operation beyond 60 years (refer to the TVA Letter to NRC, Sequoyah Nuclear Plant, Revision to Reactor Pressure Vessel Surveillance Capsule Withdrawal Schedule for License Renewal dated May 14, 2015).

A.1.36 RG 1.127, Inspection of Water-Control Structures Associated with Nuclear Power Plants Program

SQN is not committed to the requirements of NRC Regulatory Guide (RG) 1.127, "Inspection of Water-Control Structures Associated with Nuclear Power Plants." However, the program at SQN was developed based on guidance provided in the NRC RG 1.127, Revision 1, "Inspection of Water-Control Structures Associated with Nuclear Power Plants," and provides an inservice inspection and surveillance program for the SQN slopes, channels and raw water-control structures associated with emergency cooling water systems or flood protection. The scope of the SQN program includes water-control structures within the scope of license renewal as delineated in 10 CFR 54.4. The program performs periodic visual examinations to monitor the condition of water-control structures and structural components. The program addresses age-related deterioration, degradation due to extreme environmental conditions, and the effects of natural phenomena that may affect water-control structures so that the consequences of age-related deterioration and degradation can be prevented or mitigated in a timely manner. The program has been implemented as part of the Structures Monitoring Program (Section A.1.40).

The program provides guidance on engineering data compilation, inspection activities, technical evaluation, inspection frequency, and the content of inspection reports. Inspections of water-control structures are conducted by or under the direction of qualified engineers experience in the investigation, design, construction, and operation of the structures. Inspections are conducted systematically using checklists and other documents as required to minimize the possibility of overlooking significant features. Technical evaluations are performed if observed degradations have the potential for impacting the intended function of the water-control structures.

Enhancements to this program are included in the enhancements to the Structures Monitoring Program (Section A.1.40).

A.1.37 Selective Leaching Program

The Selective Leaching Program demonstrates the absence of selective leaching in a selected sample of components (i.e., 20 percent of the population with maximum of 25 components) fabricated from gray cast iron the only components constructed of this material in the scope of license renewal are eight valves in the High Pressure Fire Protection (HPFP System) and copper alloys (except for inhibited brass) that contain greater than 15 percent zinc or greater than 8 percent aluminum exposed to raw water, waste water, treated water, or ground water. A sample population is defined as components with the same material and environment combination. The sample population will focus on bounding or leading components most susceptible to aging due to time in service, severity of operating condition, and lowest design margin. The program includes a one-time visual inspection of selected components coupled with hardness measurement or other mechanical examination techniques such as destructive testing, scraping or chipping to determine whether loss of material is occurring due to selective leaching that may affect the ability of a component to perform its intended function during the period of extended operation.

Follow-up for unacceptable inspection findings includes an evaluation using the corrective action program and possible expansion of the inspection sample size and location.

This inspection was performed within the five years prior to the period of extended operation with exception of the gray cast iron HPFP valves. These valves were installed in 1998, and based on the guidance in NUREG-1801, Rev. 2, the inspection of these valves for selective leaching shall take place between 2033 and 2038.

A.1.38 Service Water Integrity Program

The Service Water Integrity Program manages loss of material and fouling for components fabricated from carbon steel, carbon steel clad with stainless steel, cast iron, copper alloy, nickel alloy, or stainless steel exposed to ERCW as described in the SQN response to NRC GL 89-13. The program includes (a) surveillance and control techniques to manage effects of biofouling, corrosion, erosion, coating failures, and silting; (b) tests to verify heat transfer capability of heat exchangers important to safety; (c) system walkdowns to ensure compliance with the licensing basis; and (d) routine inspections and maintenance.

The Service Water Integrity Program has been enhanced as follows.

- Revise Service Water Integrity Program procedures to perform periodic visual inspections to manage loss of coating integrity due to cracking, debonding, delamination, peeling, flaking, and blistering in heat exchangers credited in the NRC Generic Letter (GL) 89-13 response. Include the following coating integrity acceptance criteria: (1) peeling and delamination are not permitted, (2) cracking is not permitted if accompanied by delamination or loss of adhesion, and (3) blisters are limited to intact blisters that are completely surrounded by sound coating bonded to the surface.

- Revise Service Water Integrity Program procedures to ensure coating inspections are performed by individuals certified to ANSI N45.2.6, "Qualifications of Inspection, Examination, and Testing Personnel for Nuclear Power Plants," and that subsequent evaluation of inspection findings is conducted by a nuclear coatings subject matter expert qualified in accordance with ASTM D 7108-05, "Standard Guide for Establishing Qualifications for a Nuclear Coatings Specialist."

- Revise Service Water Integrity Program procedures to ensure an individual knowledgeable and experienced in nuclear coatings work will prepare a coating report that includes a list of locations identified with coating deterioration including, where possible, photographs indexed to inspection location, and a prioritization of the repair areas into areas that must be repaired before returning the system to service and areas where coating repair can be postponed to the next inspection."

- Revise Service Water Integrity Program procedures to periodically place normally ERCW stagnant/dead legs in service for the purpose of flushing. Alternatively, periodically flush the normally stagnant/dead leg by temporarily/permanently installing a flushing valve (without placing the line in service). In lieu of flushing, periodic radiograph, demonstrated ultrasonic or visual inspections of ERCW stagnant/dead leg piping are acceptable to confirm the absence of fouling/clogging. Any identified fouling or clogging will be documented in the corrective action program and the impact on ERCW system design functions evaluated. This enhancement is applicable to ERCW flow-paths that fulfill a safety-related function.

A.1.39 Steam Generator Integrity Program

The Steam Generator Integrity Program manages aging effects for the steam generator tubes, plugs, sleeves, and secondary side components contained within the steam generator in accordance with the plant technical specifications and commitments to NEI 97-06. Preventive and mitigative measures include foreign material exclusion programs and other primary and secondary side maintenance activities.

The Steam Generator Integrity Program has been enhanced as follows.

- Revise Steam Generator Integrity Program procedures to ensure that corrosion resistant materials are used for replacement steam generator tube plugs.

A.1.40 Structures Monitoring Program

The Structures Monitoring Program provides for aging management of structures and structural components, including structural bolting, within the scope of license renewal. The program was developed based on guidance in Regulatory Guide 1.160, Revision 2, "Monitoring the Effectiveness of Maintenance at Nuclear Power Plants," and NUMARC 93-01, Revision 2, "Industry Guidelines for Monitoring the Effectiveness of Maintenance at Nuclear Power Plants," to satisfy the requirement of 10 CFR 50.65, "Requirements for Monitoring the Effectiveness of Maintenance at Nuclear Power Plants." The scope of the Structures Monitoring Program includes structures within the scope of license renewal as delineated in 10 CFR 54.4. The program performs periodic visual examinations to monitor the condition of structures and structural components, including components such as concrete and steel components, structural bolting, component supports, concrete masonry blocks, and other structures such as earthen structures. Inspections are performed at least once every five years, with provisions for more frequent inspections, to ensure there is no loss of intended function between inspections. The scope of the program also includes the condition monitoring of masonry walls and water-control structures as described in the Masonry Wall Program (Section A.1.20) and in

the NRC Regulatory Guide 1.127, "Inspection of Water-Control Structures Associated with Nuclear Power Plants," aging management program (Section A.1.36).

The Structures Monitoring Program is augmented by plant procedures to ensure that the selection of bolting material, installation torque or tension, and the use of lubricants and sealants are appropriate for the intended purpose. These procedures include the guidance of EPRI TR-104213, NUREG-1339, and EPRI NP-5769 to ensure proper specification of bolting material, lubricant, and installation torque.

The Structures Monitoring Program has been enhanced as follows.

- Revise Structures Monitoring Program procedures to include the following in-scope structures.
  - Carbon dioxide building
  - Condensate storage tanks' (CSTs) foundations and pipe trench
  - East steam valve room Units 1 & 2
  - Essential raw cooling water (ERCW) pumping station
  - High pressure fire protection (HPFP) pump house and water storage tanks' foundations
  - Radiation monitoring station (or particulate iodine and noble gas station) Units 1 & 2
  - Service Building
  - Skimmer wall (Cell No. 12)
  - Transformer and switchyard support structures and foundations
- Revise Structures Monitoring Program procedures to specify the following list of in-scope structures are included in the RG 1.127, Inspection of Water-Control Structures Associated with Nuclear Power Plants Program (Section A.1.36):
  - Condenser cooling water (CCW) pumping station (also known as intake pumping station) and retaining walls
  - CCW pumping station intake channel
  - ERCW discharge box
  - ERCW protective dike
  - ERCW pumping station and access cells
  - Skimmer wall, skimmer wall Dike A and underwater dam

APPENDIX A

- Revise Structures Monitoring Program procedures to include the following in-scope structural components and commodities.
    - Anchor bolts
    - Anchorage/embedments (e.g., plates, channels, unistrut, angles, other structural shapes)
    - Beams, columns and base plates (steel)
    - Beams, columns, floor slabs and interior walls (concrete)
    - Beams, columns, floor slabs and interior walls (reactor cavity and primary shield walls; pressurizer and reactor coolant pump compartments; refueling canal, steam generator compartments; crane wall and missile shield slabs and barriers)
    - Building concrete at locations of expansion and grouted anchors; grout pads for support base plates
    - Cable tray
    - Cable tunnel
    - Canal gate bulkhead
    - Compressible joints and seals
    - Concrete cover for the rock walls of approach channel
    - Concrete shield blocks
    - Conduit
    - Control rod drive missile shield
    - Control room ceiling support system
    - Curbs
    - Discharge box and foundation
    - Doors (including air locks and bulkhead doors)
    - Duct banks
    - Earthen embankment
    - Equipment pads/foundation
    - Explosion bolts (E. G. Smith aluminum bolts)

APPENDIX A

- Exterior above and below grade; foundation (concrete)
- Exterior concrete slabs (missile barrier) and concrete caps
- Exterior walls: above and below grade (concrete)
- Foundations: building, electrical components, switchyard, transformers, circuit breakers, tanks, etc.
- Ice baskets
- Ice baskets lattice support frames
- Ice condenser support floor (concrete)
- Insulation (fiberglass, calcium silicate)
- Intermediate deck and top deck of ice condenser
- Kick plates and curbs (steel—inside steel containment vessel)
- Lower inlet doors (inside steel containment vessel)
- Lower support structure structural steel: beams, columns, plates (inside steel containment vessel)
- Manholes and hand holes
- Manways, hatches, manhole covers, and hatch covers (concrete)
- Manways, hatches, manhole covers, and hatch covers (steel)
- Masonry walls
- Metal siding
- Miscellaneous steel (decking, grating, handrails, ladders, platforms, enclosure plates, stairs, vents and louvers, framing steel, etc.)
- Missile barriers/shields (concrete)
- Missile barriers/shields (steel)
- Monorails
- Penetration seals
- Penetration seals (steel end caps)
- Penetration sleeves (mechanical and electrical not penetrating primary containment boundary)

- Personnel access doors, equipment access floor hatch and escape hatches
- Piles
- Pipe tunnel
- Precast bulkheads
- Pressure relief or blowout panels
- Racks, panels, cabinets and enclosures for electrical equipment and instrumentation
- Riprap
- Rock embankment
- Roof or floor decking
- Roof membranes
- Roof slabs
- RWST rainwater diversion skirt
- RWST storage basin
- Seals and gaskets (doors, manways and hatches)
- Seismic/expansion joint
- Shield building concrete foundation, wall, tension ring beam and dome: interior, exterior above and below grade
- Steel liner plate
- Steel sheet piles
- Structural bolting
- Sumps (concrete)
- Sump liners (steel)
- Sump screens
- Support members; welds; bolted connections; support anchorages to building structure (e.g., non-ASME piping and components supports, conduit supports, cable tray supports, HVAC duct supports, instrument tubing supports, tube track supports,pipe whip restraints, jet impingement shields, masonry walls, racks, panels, cabinets and enclosures for electrical equipment and instrumentation)

APPENDIX A

- Support pedestals (concrete)
- Transmission, angle and pull-off towers
- Trash racks
- Trash racks associated structural support framing
- Traveling screen casing and associated structural support framing
- Trenches (concrete)
- Tube track
- Turning vanes
- Vibration isolators
- Portions of the pressurizer relief tanks (feet, shell, and saddles at tank piping penetrations, etc.) that provide structural support for the pressurizer safety valve/PORV discharge piping.

- Revise Structures Monitoring Program procedures to specify masonry walls located in the following in-scope structures are in the scope of the Masonry Wall Program:
  - Auxiliary building
  - Reactor building Units 1 & 2
  - Control bay
  - ERCW pumping station
  - HPFP pump house
  - Turbine building
- Revise Structures Monitoring Program procedures to include periodic sampling and chemical analysis of ground water chemistry for pH, chlorides, and sulfates on a frequency of at least every five years.

- Revise Structures Monitoring Program procedures to include the following parameters to be monitored or inspected:
  - Requirements for concrete structures based on ACI 349-3R and ASCE 11 and include monitoring the surface condition for loss of material, loss of bond, increase in porosity and permeability, loss of strength, and reduction in concrete anchor capacity due to local concrete degradation.
  - Loose or missing nuts for structural bolting.
  - Monitoring gaps between the structural steel supports and masonry walls that could potentially affect wall qualification.

- Monitor the surface condition of insulation (fiberglass, calcium silicate) to identify exposure to moisture that can cause loss of insulation effectiveness.

- Revise Structures Monitoring Program procedures to include the following components to be monitored for the associated parameters:
  - Anchors/fasteners (nuts and bolts) will be monitored for loose or missing nuts and/or bolts, and cracking of concrete around the anchor bolts.
  - Elastomeric vibration isolators and structural sealants will be monitored for cracking, loss of material, loss of sealing, and change in material properties (e.g., hardening).

- Revise Structures Monitoring Program procedures to include the following for detection of aging effects:
  - Inspection of structural bolting for loose or missing nuts.
  - Inspection of anchor bolts for loose or missing nuts and/or bolts, and cracking of concrete around the anchor bolts.
  - Inspection of elastomeric material for cracking, loss of material, loss of sealing, and change in material properties (e.g., hardening), and supplement inspection by feel or touch to detect hardening if the intended function of the elastomeric material is suspect. Include instructions to augment the visual examination of elastomeric material with physical manipulation of at least ten percent of available surface area.
  - Inspection of insulation (fiberglass, calcium silicate) to manage loss of material and change in material properties due to exposure to moisture that can cause loss of insulation effectiveness.
  - Opportunistic inspections when normally inaccessible areas (e.g., high radiation areas, below-grade concrete walls or foundations, buried structures) become accessible due to required plant activities. Additionally, inspections will be performed of inaccessible areas in environments where observed conditions in accessible areas exposed to the same environment indicate that significant degradation is occurring.
  - Inspection of submerged structures at least once every five years.
  - Inspections of water control structures which should be conducted under the direction of qualified personnel experienced in the investigation, design, construction, and operation of these types of facilities.
  - Inspections of water control structures on an interval not to exceed five years.
  - Performance of special inspections of water control structures immediately (within 30 days) following the occurrence of significant natural phenomena, such as large floods, earthquakes, hurricanes, tornadoes, and intense local rainfalls.
  - Qualifications of personnel conducting the inspections of testing and evaluation of structures and structural components meet the guidance in Chapter 7 of ACI 349.3R

- Revise Structures Monitoring Program procedures to prescribe quantitative acceptance criteria based on the quantitative acceptance criteria of ACI 349.3R and information provided in industry codes, standards, and guidelines including ACI 318, ANSI/ASCE 11 and relevant AISC specifications. Industry and plant-specific operating experience will also be considered in the development of the acceptance criteria.

- Revise Structures Monitoring Program procedures to include the following acceptance criteria for insulation (calcium silicate and fiberglass):
  - No moisture or surface irregularities that indicate exposure to moisture.
- Revise Structures Monitoring Program procedures to include the following preventive actions.
  - Specify protected storage requirements for high-strength fastener components (specifically ASTM A325 and A490 bolting.) Storage of these fastener components shall include: (1) maintaining fastener components in closed containers to protect from dirt and corrosion; (2) storage of the closed containers in a protected shelter; (3) removal of fastener components from protected storage only as necessary; and (4) prompt return of any unused fastener components to protected storage.

A.1.41 Thermal Aging Embrittlement of Cast Austenitic Stainless Steel Program

The Thermal Aging Embrittlement of Cast Austenitic Stainless Steel Program manages the aging effects of cracking and reduction in fracture toughness in cast austenitic stainless steel (CASS) components. The program consists of a determination of the susceptibility of CASS piping, piping components, and piping elements and the regenerative heat exchanger shell and channel head to thermal aging embrittlement based on Hull's equivalent factor, as described in NUREG/CR-4513, Revision 1. For potentially susceptible components, aging management is accomplished through qualified visual inspections, such as enhanced visual examination, qualified ultrasonic testing methodology, or component-specific flaw tolerance evaluation in accordance with ASME Section XI code, 2001 Edition 2003 addendum. Applicable industry standards and guidance documents are used to delineate the program. For CASS materials with estimated delta ferrite > 20% that have been determined susceptible to thermal aging, a flaw tolerance analyses may be performed using ASME Code approaches for flaw tolerance of CASS that have been accepted and approved by the time that flaw tolerance must be demonstrated. For those CASS components with delta ferrite content > 25%, additional analysis will be performed using plant-specific materials data and best available fracture toughness curves.

A.1.42 Water Chemistry Control – Closed Treated Water Systems Program

The Water Chemistry Control – Closed Treated Water Systems Program manages loss of material, cracking, and fouling in components exposed to a treated water environment through monitoring and control of water chemistry (including the use of corrosion inhibitors), as well as visual inspections to determine the presence of corrosion and/or cracking. The latest revision of the EPRI closed-cycle cooling guidelines and operating experience are used to delineate the program.

APPENDIX A

The Water Chemistry Control – Closed Treated Water Systems Program has been enhanced as follows.

- Revise Water Chemistry Control – Closed Treated Water Systems Program procedures to provide a corrosion inhibitor for the following chilled water subsystems in accordance with industry guidelines and vendor recommendations:
  - Auxiliary building cooling
  - Incore Chiller 1A, 1B, 2A, & 2B
  - 6.9 kV Shutdown Board Room A & B
- Revise Water Chemistry Control – Closed Treated Water Systems Program procedures to conduct inspections whenever a boundary is opened for the following systems:
  - Standby diesel generator jacket water subsystem
  - Component cooling system
  - Glycol cooling loop system
  - High pressure fire protection diesel jacket water system
  - Chilled water portion of miscellaneous HVAC systems (i.e., auxiliary building, Incore Chiller 1A, 1B, 2A, & 2B, and 6.9 kV Shutdown Board Room A & B)

  These inspections will be conducted in accordance with applicable ASME Code requirements, industry standards, or other plant-specific inspection and personnel qualification procedures that are capable of detecting corrosion or cracking.
- Revise Water Chemistry Control – Closed Treated Water Systems Program procedures to perform sampling and analysis of the glycol cooling system per industry standards and in no case greater than quarterly unless justified with an additional analysis.
- Revise Water Chemistry Control – Closed Treated Water Systems Program procedures to inspect a representative sample of piping and components at a frequency of once every ten years for the following systems:
  - Standby diesel generator jacket water subsystem
  - Component cooling system
  - Glycol cooling loop system
  - High pressure fire protection diesel jacket water system
  - Chilled water portion of miscellaneous HVAC systems (i.e., auxiliary building, Incore Chiller 1A, 1B, 2A, & 2B, and 6.9 kV Shutdown Board Room A & B)

Components inspected will be those with the highest likelihood of corrosion or cracking. A representative sample is 20 percent of the population (defined as components having the same material, environment, and aging effect combination) with a maximum of 25 components. These inspections will be in accordance with applicable ASME Code requirements, industry standards, or other plant-specific inspection and personnel qualification procedures that ensure the capability of detecting corrosion or cracking.

A.1.43 Water Chemistry Control – Primary and Secondary Program

The Water Chemistry Control – Primary and Secondary Program manages loss of material, cracking, and fouling in components exposed to a treated water environment through periodic monitoring and control of water chemistry. The Water Chemistry Control – Primary and Secondary Program monitors and controls water chemistry parameters such as pH, chloride, fluoride, and sulfate. EPRI Report 1014986 Rev. 6 or subsequent revision is used to provide guidance for primary water chemistry, and EPRI Report 1016555 Rev. 7 or subsequent revision is used to provide guidance for secondary water chemistry.

The One-Time Inspection Program (Section A.1.29) uses inspections or nondestructive evaluations of representative samples to verify that the Water Chemistry Control – Primary and Secondary Program has been effective at managing aging effects. The representative sample includes low flow and stagnant areas.

A.1.44 161-kV Oil-Filled Cable Program

The plant-specific 161-kV Oil-Filled Cable Program provides reasonable assurance the intended functions of the insulated cables, connections, and pressurized oil system components exposed to their respective environments can be maintained consistent with the current licensing basis through the period of extended operation.

Periodic visual walkdowns of the complete system are conducted to discover any oil leaks to prevent introducing air, water, or other contamination. Periodic oil pressure and inventory checks are conducted to maintain the integrity of the closed pressurized system.

Periodic oil sampling requires the depressurization of the pressurized system introducing the potential for ingress of outside contaminants. Oil sampling is conducted on an opportunistic basis (such as repairs or major maintenance activities), when system depressurizations are required. As opportunistic oil sampling is conducted, oil contaminant levels shall be trended and a condition report shall be initiated if contaminant levels exceed alert levels or limits.

Periodic cable testing is conducted to ensure the oil-impregnated paper insulation between the conductors and the aluminum sheath is not aging from the potential aging effects of oil contaminants.

Good industry practices, such as one-time ultrasonic test (UT) of oil reservoirs, periodic thermoscans of cable connections, periodic partial discharge checks at the potheads, and periodic pothead porcelain cleanings are also conducted to maintain the integrity of the oil-filled cable system.

A.2 EVALUATION OF TIME-LIMITED AGING ANALYSES

In accordance with 10 CFR 54.21(c), an application for a renewed license requires an evaluation of time-limited aging analyses for the period of extended operation. The following time-limited aging analyses were evaluated as part of the license renewal application to meet this requirement.

A.2.1 Reactor Vessel Neutron Embrittlement

The regulations governing reactor vessel integrity are in 10 CFR 50. Section 50.60 requires that light-water reactors meet the fracture toughness, pressure-temperature limits, and material surveillance program requirements for the reactor coolant pressure boundary set forth in Appendices G and H of 10 CFR 50. Based on the plant operating history, 52 EFPY is used to bound the expected EFPY for both units.

A.2.1.1 Reactor Vessel Fluence

Fluence is calculated based on a time-limited assumption defined by the operating term. Therefore, analyses that evaluate reactor vessel neutron embrittlement based on calculated fluence are TLAAs. The neutron fluence values for the SQN Unit 1 and Unit 2 reactor pressure vessel beltline material have been projected to 52 EFPY of operation.

The methods used to calculate the SQN Unit 1 and Unit 2 vessel fluence satisfy the criteria set forth in Regulatory Guide 1.190, "Calculational and Dosimetry Methods for Determining Pressure Vessel Neutron Fluence." These methods have been approved by the NRC and are described in detail in WCAP-14040-A, Revision 4, and WCAP-16083-NP-A, Revision 0.

UFSAR Section 5.4.3.7 provides additional information on the specimen capsules and the associated dosimeters used to monitor reactor vessel embrittlement and neutron fluence. WCAP-15224, June 1999, and WCAP-15320, December 1999 include the results of capsules T, U, X, and Y for Units 1 and 2 respectively. See Section A.1.35 for additional information on the Reactor Vessel Surveillance Program.

Fluence is treated as a TLAA that has been projected to the end of the period of extended operation in accordance with 10 CFR 54.21(c)(1)(ii) and used as an input to the analyses in the following sections.

A.2.1.2 Upper Shelf Energy

For the license renewal application, upper shelf energy (USE) was evaluated for all materials included in the original and extended beltline. Fracture toughness criteria in 10 CFR 50 Appendix G requires that beltline materials maintain USE no less than 50 ft-lb during operation of the reactor. The 52 EFPY USE values for the beltline materials were determined using methods consistent with RG 1.99, Revision 2, Radiation Embrittlement of Reactor Vessel Materials. The value of peak ¼T fluence is used.

Two methods can be used to predict the decrease in USE with irradiation, depending on the availability of credible surveillance capsule data as defined in Regulatory Guide 1.99. For vessel beltline materials that are not in the surveillance program or for locations with non-credible data, the Charpy USE is assumed to decrease as a function of fluence and copper content, as indicated in Regulatory Guide 1.99, Revision 2 (Position 1.2). When two or more credible surveillance data sets are available from the reactor, they may be used to determine the Charpy USE of the surveillance material. The surveillance data are then used in conjunction with the regulatory guide to predict the change in USE of the reactor vessel material due to irradiation (Position 2.2).

The 52 EFPY Position 1.2 USE values of the vessel materials can be predicted using the corresponding ¼T fluence projection, the copper content of the materials, and Figure 2 in Regulatory Guide 1.99, Revision 2. The predicted Position 2.2 USE values are determined for the reactor vessel materials that are contained in the surveillance program by using the plant surveillance data along with the corresponding ¼T fluence projection.

All of the original beltline and extended beltline materials in the SQN Unit 1 and Unit 2 reactor vessels are projected to remain above the USE limit of 50 ft-lb (per 10 CFR 50 Appendix G) through 52 EFPY. Therefore, the SQN Unit 1 and Unit 2 reactor vessel Charpy USE TLAAs have been projected to the end of the period of extended operation in accordance with 10 CFR 54.21(c)(1)(ii).

A.2.1.3 Pressurized Thermal Shock

10 CFR 50.61(b)(1) provides rules for protection against pressurized thermal shock events for pressurized water reactors. Licensees are required to perform an assessment of the projected values of reference temperature whenever a significant change occurs in projected values of the adjusted reference temperature for pressurized thermal shock (RT_{PTS}), or upon request for a change in the expiration date for the operation of the facility. Section 10 CFR 50.61(b)(2) establishes screening criteria for RT_{PTS} at 270°F for plates, forgings, and axial welds and 300°F for circumferential welds.

Section 10 CFR 50.61(c) provides two methods for determining RT_{PTS}. Position 1 applies for material that does not have surveillance data available, and Position 2 applies for material with surveillance data. Positions 1 and 2 are described in Regulatory Guide 1.99, Revision 2. Adjusted reference temperatures are calculated for both Positions 1 and 2 by following the guidance in Regulatory Guide 1.99, Sections 1.1 and 2.1, respectively, using copper and nickel content of beltline materials and end-of-life fluence projections.

The beltline and extended beltline materials in the Unit 1 and Unit 2 reactor vessels are below the RT_{PTS} screening criteria values of 270°F for forgings and 300°F for circumferentially oriented welds through 52 EFPY. Therefore, the SQN Unit 1 and Unit 2 reactor vessel RT_{PTS} TLAAs have been projected to the end of the period of extended operation in accordance with 10 CFR 54.21(c)(1)(ii).

A.2.1.4 Pressure-Temperature Limits

Appendix G of 10 CFR 50 requires operation of the reactor pressure vessel within established pressure-temperature (P-T) limits. These limits are established by calculations that utilize the materials and fluence data obtained through the Reactor Vessel Surveillance Program (Section A.1.35). The P-T limits are calculated for several years into the future and remain valid for an established period of time. The provisions of 10 CFR 50 Appendix G require the P-T limit curves be maintained and updated as necessary.

SQN Unit 1 Technical Specification 3.4.9.1 and the SQN Unit 2 Technical Specification 3.4.9.1 require the RCS pressure, RCS temperature, and RCS heatup and cooldown rates to be maintained within the limits specified in the P-T limits report (PTLR). The Technical Specifications Administrative Controls Section 6.9.1.15 provides additional details on the PTLR and the Westinghouse topical reports that provide the analytical methods used to determine the RCS P-T limits. It requires the analytical methods used to determine the RCS P-T limits to be those previously reviewed and approved by the NRC and requires the PTLR to be provided to the NRC within 30 days of issuance of any revision or supplement thereto.

The analyses used to determine the P-T limit curves, including the associated WCAP supporting documentation, are considered TLAAs. The SQN Unit 1 and Unit 2 P-T limit curves contained in each plant's PTLR provide the limits through 32 EFPY. Prior to exceeding 32 EFPY, SQN will generate new PTLRs to cover plant operation beyond 32 EFPY. As required by Technical Specification 6.9.1.15, the P-T limit curves will be developed using NRC-approved analytical methods.

The SQN Unit 1 and Unit 2 P-T limit curves in each plant's PTLR has been updated, as 10 CFR 50 Appendix G requires, through the period of extended operation in conjunction with the Reactor Vessel Surveillance Program (Section A.1.35). The analysis of the P-T curves will consider locations outside of the beltline such as nozzles, penetrations and other discontinuities to determine if more restrictive P-T limits are required than would be determined by considering only the reactor vessel beltline materials. Therefore, the P-T limit curves TLAAs will be adequately managed for the period of extended operation in accordance with 10 CFR 54.21(c)(1)(iii).

A.2.1.5 Low Temperature Overpressure Protection (LTOP) PORV Setpoints

The SQN Unit 1 Technical Specification 3.4.12 and SQN Unit 2 Technical Specification 3.4.12 specify that the power operated relief valve (PORV) setpoints must be at lift settings within the limits of the PTLR. Additional descriptions of the PORV setpoint and the PTLR are provided in the Technical Specification 3/4.4.12 Bases. Each time the P-T limit curves are revised, the LTOP PORV setpoints must be reevaluated. Therefore, low temperature overpressure protection limits are considered part of the calculation of P-T curves in each plant's PTLR. The P-T limit curves are updated prior to exceeding applicable EFPY limits. See UFSAR Section A.2.1.4 for further information on the P-T limit curves. Therefore, the LTOP PORV setpoint TLAA will be adequately managed for the period of extended operation in accordance with 10 CFR 54.21(c)(1)(iii).

A.2.2 Metal Fatigue

Fatigue analyses are considered TLAAs for Class 1 and non-Class 1 mechanical components. Fatigue is an age-related degradation mechanism caused by cyclic stressing of a component by either mechanical or thermal stresses.

The aging management reviews that were performed for license renewal identify mechanical components that are within the scope of license renewal and are subject to aging management review. When TLAA – metal fatigue is identified in the aging management program column of the tables in Section 3 of the license renewal application, the associated fatigue analyses are evaluated in this section. Evaluation of the TLAAs per 10 CFR 54.21(c)(1) determines whether

(i) the analyses remain valid for the period of extended operation,

(ii) the analyses have been projected to the end of the period of extend operation, or

(iii) the effects of aging on the intended function(s) will be adequately managed for the period of extended operation.

Documentation of the evaluation of SQN Class 1 component fatigue analyses is provided in Section A.2.2.1. Fatigue analysis of non-Class 1 mechanical components is discussed in Section A.2.2.2. Screening for environmentally adjusted fatigue effects is documented in Section A.2.2.3.

A.2.2.1 Class 1 Metal Fatigue

The major Class 1 components at SQN include the reactor vessels, pressurizers, reactor coolant pumps, steam generators, control rod drives, and all associated piping and valves. Fatigue evaluations performed in the design of SQN Class 1 components in accordance with ASME Section III requirements are contained in the equipment stress reports and associated analyses. The fatigue evaluations calculate a cumulative usage factor (CUF) for each component or subassembly based on a specified number of design cycles for that component. Because the design cycles may be the number of transient cycles that were assumed for a 40-year license term, these calculations of CUFs are considered TLAAs.

SQN Technical Specification 6.8.4.I identifies a component cyclic and transient limit program to provide controls to track the UFSAR Section 5.2.1 cyclic and transient occurrences. UFSAR Section 5.2.1 and UFSAR Table 5.2.1-1 summarize the reactor coolant system cyclic or transient limits. In addition, the Technical Requirements Manual surveillance requirement 4.4.9.2.2 requires the recording of any occurrence of pressurizer spray operation with a differential temperature greater than 320°F for evaluation of the cyclic limits.

SQN will manage the aging effects due to fatigue of these components using the Fatigue Monitoring Program in accordance with 10 CFR 54.21(1)(c)(iii). The SQN Fatigue Monitoring Program monitors transient cycles that contribute to fatigue usage and is further described in UFSAR Section A.1.11.

<u>Reactor Vessels</u>

As described in UFSAR, Section 5.4, design and fabrication of the reactor vessels was in accordance with ASME Section III, Class A. SQN will monitor transient cycles using the Fatigue Monitoring Program and assure that corrective action specified in the program is taken if any of the actual cycles approach their analyzed numbers. As such, the Fatigue Monitoring Program will manage the effects of aging due to fatigue on the reactor vessel in accordance with 10 CFR 54.21(c)(1)(iii).

<u>Reactor Vessel Internals</u>

As indicated by the title of UFSAR, Section 3.9.3, the design of SQN Units 1 and 2 reactor vessel internals was not covered by the ASME code. SQN Unit 1 and Unit 2, therefore, do not have an ASME stress report for the originally supplied reactor vessel internals.

Stress reports were generated for several specific reactor vessel internals locations to support component replacement or reanalysis. Usage factors were calculated for the CRD guide tube pins replacement components. The lower core plate was reanalyzed as part of the measurement uncertainty recapture power uprate that included the determination of a usage factor.

The Fatigue Monitoring Program will manage the effects of aging due to fatigue on the reactor vessel internals in accordance with 10 CFR 54.21(c)(1)(iii).

Pressurizers

As described in UFSAR, Section 5.5.10, the pressurizers are vertical, cylindrical vessels with essentially hemispherical top and bottom heads constructed of carbon steel, with austenitic stainless steel cladding on all surfaces exposed to reactor coolant. The surge line nozzle and electric heaters are installed in the bottom head.

The original analysis assumed the surge nozzle configuration would cause mixing of the water in the pressurizers during insurges. Later studies identified that the lower temperature water would enter the pressurizer and stratify. In a joint project with Duke Power, TVA developed an algorithm to use a mass balance approach to predict the flow rate at the bottom head of the pressurizer and calculate the associated fatigue impact.

The Fatigue Monitoring Program will manage the effects of aging due to fatigue on the pressurizer in accordance with 10 CFR 54.21(c)(1)(iii).

Replacement Steam Generators (RSGs)

The replacement steam generators for both SQN Unit 1 and Unit 2 were designed to ASME Boiler and Pressure Vessel Code, Section III, Division 1, 1989 Edition with no Addenda. The SQN Unit 1 steam generators were replaced in the spring of 2003, and the SQN Unit 2 steam generators were replaced in the fall of 2012. The replacement steam generators were designed for a 40-year life except for the Unit 2 Loop 1 FW nozzle. The 40-year design covers a time period beyond the end of the period of extended operation (2040 for Unit 1 and 2041 for Unit 2). The Unit 2 RSG Loop 1 feedwater nozzle does not have a thermal liner installed in the elbow connected to the nozzle. Without the elbow thermal liner installed the nozzle does not meet the fatigue requirements for the 40-year design cycles. To compensate for this, actual operating cycles are monitored to ensure that the cumulative usage factor remains ≤ 1.0, allowing the nozzle to be used for the 40-year RSG design life.

The Fatigue Monitoring Program (with enhancements) will manage the effects of aging due to fatigue on the steam generators in accordance with 10 CFR 54.21(c)(1)(iii).

Control Rod Drive Mechanisms

The control rod drive mechanisms are described in UFSAR, Section 4.2.3.2.2 and shown in UFSAR, Figure 4.2.3-7. The Fatigue Monitoring Program will manage the effects of aging due to fatigue on the control rod drives in accordance with 10 CFR 54.21(c)(1)(iii).

Reactor Coolant Pumps

As described in UFSAR, Section 5.2, the reactor coolant pumps are vertical, single stage, centrifugal, shaft seal pumps. The reactor coolant pump configuration is shown in UFSAR, Figure 5.5.1-1. The Fatigue Monitoring Program will manage the effects of aging due to fatigue on the reactor coolant pumps in accordance with 10 CFR 54.21(c)(1)(iii).

Reactor Coolant System Piping

As shown in UFSAR, Table 3.2.2-2 and discussed in UFSAR, Section 5.5.3, the original design analyses for the reactor coolant system piping was in accordance with USAS B31.1. This piping was not analyzed for specific design transients. The USAS B31.1 fatigue design is based on an implicit treatment of cyclic loadings, through a stress range reduction factor applied to the stress allowables that depends on the number of equivalent full thermal loading cycles anticipated during service of the component. In general, a stress range reduction factor of 1.0 in the stress analyses applies for up to 7000 thermal cycles. Therefore, the RCS pressure boundary piping analyzed under B31.1 is qualified for at least 7000 cycles (ASME Boiler and Pressure Vessel Code, Division 1, Subsection NC, Class 2 Components). The number of RCS heatups and cooldowns is maintained much less than 7000 cycles. Therefore, the pipe stress calculations are valid for the period of extended operation in accordance with 10 CFR 54.21(c)(1)(i).

Specific piping locations in the RCS pressure boundary were later reanalyzed to ASME Section III:

- Pressurizer surge line.
- Thermowells installed in RCS (to replace resistance temperature detector bypass piping).

The pressurizer surge line at the hot leg to surge line was evaluated for any increased effects from pressurizer insurges and outsurges as part of the NRC Bulletin 88-11 response.

When the resistance temperature detector bypass piping was removed and direct sensing nozzles installed on the hot and cold legs, thermowells were installed. UFSAR Sections, 5.5.3.2 and 5.6 provide additional details of the configuration. These thermowells were qualified to ASME Section III. Calculation determined the thermowells were exempt from a detailed fatigue analysis (no CUF was calculated) since the conditions of the 1983 ASME NB-3222.4(d) were satisfied. This exemption was based on not exceeding the number of transient cycles and is therefore treated as a TLAA that will be managed by the Fatigue Monitoring Program. See UFSAR Section A.1.11 for further information on the program.

The Fatigue Monitoring Program will manage the effects of aging due to fatigue on the reactor coolant system piping designed to ASME Section III in accordance with 10 CFR 54.21(c)(1)(iii).

A.2.2.2 Non-Class 1 Metal Fatigue

As shown in UFSAR Table 3.2.2-2, the non-Class 1 piping systems were designed to B31.1.0-1967, supplemented by use of the provisions of Class 2, NC-3600, ASME Section III, 1971 Edition up to and including Winter 1972 Addenda. Some of the SQN Unit 1 and Unit 2 non-Class 1 piping that is not part of the RCS pressure boundary was analyzed to meet ASME Section III due to modifications or reanalysis. Certain non-Class 1 heat exchangers were analyzed to ASME Section III and are reviewed in the following sections.

APPENDIX A

Non-Class 1 Pressure Boundary Piping Using Stress Range Reduction Factors

The impact of thermal cycles on non-Class 1 piping and in-line components is reflected in the calculation of the allowable stress range. The design of ASME III Code Class 2 and 3 or B31.1 piping systems incorporates a stress range reduction factor for determining acceptability of piping design with respect to thermal stresses. In general, a stress range reduction factor of 1.0 in the stress analyses applies for up to 7000 thermal cycles. The allowable stress range is reduced by the stress range reduction factor if the number of thermal cycles exceeds 7000 (ASME Boiler and Pressure Vessel Code, Division 1, Subsection NC, Class 2 Components). For the systems that are subjected to elevated temperatures above the fatigue threshold, thermal cycles have been projected for 60 years of plant operation for the piping and in-line components. These projections indicate that 7000 thermal cycles will not be exceeded for 60 years of operation. Therefore, the pipe stress calculations are valid for the period of extended operation in accordance with 10 CFR 54.21(c)(1)(i).

Non-Class 1 Piping with Fatigue Analysis

The following piping locations that are not part of the RCS pressure boundary were reanalyzed to calculate cumulative usage factors per ASME Section III:

- Feedwater elbows with thermal sleeves
- Feedwater elbow without thermal sleeve

Feedwater elbows with thermal sleeves, located just upstream of the steam generators, are installed in all four Unit 1 feedwater lines and in the Unit 2 feedwater lines for loops 2, 3 and 4 due to concerns with cracking on the feedwater piping. A Schedule 80 short radius elbow without a thermal sleeve was installed on the Unit 2 Loop 1 RSG during the U2R18 outage in November 2012. A fatigue analysis was performed on the Unit 2 Loop 1 RSG short radius elbow and the elbow has acceptable fatigue usage for the 40-year design cycles of the RSG. As identified in UFSAR Table 3.2.1-2 sheet 5, the feedwater thermal sleeves are designed to ASME Section III Class B.

The Fatigue Monitoring Program (Section A.1.11) will manage the effects of aging due to fatigue on the non-RCS pressure boundary piping with cumulative usage factors in accordance with 10 CFR 54.21(c)(1)(iii).

Non-Class 1 Heat Exchangers with Fatigue Analysis

The following non-Class 1 heat exchangers were analyzed to ASME Section III

- Residual heat removal (RHR) heat exchangers.
- Chemical and volume control system (CVCS) regenerative heat exchangers.

The RHR heat exchangers were evaluated for fatigue in a calculation by the vendor and determined to be exempt from a detailed fatigue analysis in accordance with ASME Section N-415-1. This exemption is based on cycles the heat exchangers would experience during 200 plant heatups and cooldowns. Since the plant cooldowns are tracked, the Fatigue Monitoring Program (Section A.1.11) will manage the effects of aging due to fatigue on the RHR heat exchangers in accordance with 10 CFR 54.21(c)(1)(iii).

The CVCS regenerative heat exchangers were evaluated for fatigue in a calculation by the vendor and usage factors calculated for the piping, tubing, shell, and tubesheet. The analysis considered the following transients to bound the original 40 years of plant operation including 200 plant heatups and cooldowns:

(1) 2,000 step changes in letdown stream fluid temperature from 100°F to 560°F.

(2) 24,000 step changes in letdown stream fluid temperature from 400°F to 560°F.

(3) 200 changes in letdown stream fluid temperature from 100°F to 560°F occurring over four hours.

(4) 200 changes in letdown stream fluid temperature from 560°F to 140°F occurring over 20 hours.

(5) 200 pressurizations to respective design pressure and temperature.

The resulting total cumulative usage factors for all of these transients were very low as shown in the following table:

Location	Usage Factor (CUF)
Piping	0.03
Tubing	0.01
Shell	0.13
Tubesheet	0.03

These low usage factors indicates the cycles could be increased if necessary. The step changes in temperature actually occur at a very low rate, and therefore, the step change cycles need not be tracked. Since the plant cooldowns are tracked, the Fatigue Monitoring Program (Section A.1.11) will manage the effects of aging due to fatigue on the CVCS regenerative heat exchangers in accordance with 10 CFR 54.21(c)(1)(iii).

A.2.2.3 Effects of Reactor Water Environment on Fatigue Life

Industry test data indicate that certain environmental effects (such as temperature and dissolved oxygen content) in the primary systems of light water reactors could result in greater susceptibility to fatigue than would be predicted by fatigue analyses based on the ASME Section III design fatigue curves. The ASME design fatigue curves were based on laboratory tests in air and at low temperatures. Although the failure curves derived from laboratory tests were adjusted to account for effects such as data scatter, size effect, and surface finish, these adjustments may not be sufficient to account for actual plant operating environments.

APPENDIX A

As reported in SECY-95-245, the NRC believes that no immediate staff or licensee action is necessary to deal with the environmentally assisted fatigue issue. In addition, the staff concluded that it could not justify requiring a backfit of the environmental fatigue data to operating plants. However, the NRC concluded that because metal fatigue effects increase with service life, environmentally assisted fatigue should be evaluated for any proposed extended period of operation for license renewal.

NUREG/CR-6260 addresses the application of environmental factors to fatigue analyses (CUFs) and identifies locations of interest for consideration of environmental effects. Section 5.5 of NUREG/CR-6260 identified the following component locations to be the most sensitive to environmental effects for SQN vintage Westinghouse plants. These locations and the subsequent calculations are directly relevant to SQN.

(1) Reactor vessel shell and lower head.

(2) Reactor vessel inlet and outlet nozzles.

(3) Pressurizer surge line (including hot leg and pressurizer nozzles).

(4) Reactor coolant piping charging system nozzle.

(5) Reactor coolant piping safety injection nozzle.

(6) Residual heat removal (RHR) system Class 1 piping.

NUREG-1801, Section X.M1 says the applicant "addresses the effects of the coolant environment on component fatigue life by assessing the impact of the reactor coolant environment on a sample of critical components for the plant." There is no analysis of environmentally assisted fatigue (EAF) under the current licensing basis. Rather, the effect on fatigue life of the reactor water environment is a new consideration for license renewal. Applying the environmental correction factor is not required during the initial 40 years of operation, consistent with the closure of Generic Safety Issue (GSI) 190.

As identified in the enhancement to the Fatigue Monitoring Program (Section A.1.11), prior to the period of extended operation, SQN will update the fatigue usage calculations using refined fatigue analyses to determine valid CUFs less than 1.0 when accounting for the effects of reactor water environment. This includes applying the appropriate F_{en} factors to valid CUFs determined using an NRC-approved version of the ASME code or NRC-approved alternative (e.g., NRC-approved code case). SQN will review design basis ASME Class 1 component fatigue evaluations to ensure the locations evaluated for the effects of the reactor coolant environment on fatigue include the most limiting components within the reactor coolant pressure boundary. Environmental effects on fatigue for these critical components will be evaluated using one of the following sets of formulae.

Carbon and Low Alloy Steels

- Those provided in NUREG/CR-6583, using the applicable ASME Section III fatigue design curve.
- Those provided in Appendix A of NUREG/CR-6909, using either the applicable ASME Section III fatigue design curve or the fatigue design curve for carbon and low alloy steel provided in NUREG/CR-6909 (Figures A.1 and A.2, respectively, and Table A.1).
- A staff-approved alternative.

Austenitic Stainless Steels

- Those provided in NUREG/CR-5704, using the applicable ASME Section III fatigue design curve.
- Those provided in NUREG/CR-6909, using the fatigue design curve for austenitic stainless steel provided in NUREG/CR-6909 (Figure A.3 and Table A.2).
- A staff-approved alternative.

Nickel Alloys

- Those provided in NUREG/CR-6909, using the fatigue design curve for austenitic stainless steel provided in NUREG/CR-6909 (Figure A.3 and Table A.2).
- A staff-approved alternative.

Original design basis fatigue calculations typically include conservatism meant to simplify the analyses, such as lumping all transients together and considering them all to be as severe as the worst transient for a particular location. As a part of incorporating the effects on fatigue of the reactor water environment, the design basis fatigue analyses may be revised for locations that would exceed a CUF of 1.0. CUFs will be determined using an NRC-approved version of the ASME code or NRC-approved alternative (e.g., NRC-approved code case). If an acceptable CUF cannot be calculated, SQN will repair or replace the affected locations before exceeding an environmentally adjusted CUF of 1.0.

Therefore, SQN will manage the effects of fatigue, including environmentally assisted fatigue, under the Fatigue Monitoring Program (Section A.1.11) for the period of extended operation in accordance with 10 CFR 54.21(c)(1)(iii).

A.2.3 Environmental Qualification of Electrical Components

All operating plants must meet the requirements of 10 CFR 50.49, which defines the scope of electrical components to be included in an EQ program and also sets forth requirements for EQ programs. Qualification is established for the environmental and service conditions expected for normal plant operation and also those conditions postulated for plant accidents. A record of qualification for in-scope components must be prepared and maintained in auditable form. Equipment qualification evaluations for EQ components that specify a qualification of at least 40 years, but less than 60 years, are considered TLAAs for license renewal.

The SQN Environmental Qualification of Electric Components Program (SQN EQ Program, Section A.1.9) manages component thermal, radiation, and cyclical aging, as applicable, through aging evaluations based on 10 CFR 50.49(f) qualification methods. As required by 10 CFR 50.49, EQ components not qualified for the current license term are to be refurbished, replaced, or have their qualification extended prior to reaching the aging limits established in the evaluation. The SQN EQ Program ensures that the EQ components are maintained in accordance with their qualification bases.

The SQN EQ Program is an existing program established to meet SQN commitments for 10 CFR 50.49. The program is consistent with NUREG-1801, Section X.E1, "Environmental Qualification (EQ) of Electric Components." The SQN EQ Program will manage the effects of aging on the intended function(s) of EQ components that are the subject of EQ TLAAs for the period of extended operation in accordance with 10 CFR 54.21(c)(1)(iii).

A.2.4 Fatigue of Primary Containment, Attached Piping, and Components

As described in UFSAR Section 3.8.2, the containment vessel for SQN is a low-leakage, free-standing steel structure consisting of a cylindrical wall, a hemispherical dome, and a bottom liner plate encased in concrete. UFSAR Figure 3.8.2-1 shows the outline and configuration of the containment vessel. The design of the containment vessel meets the requirements of the ASME Code, Section III, Winter Addenda 1968, applicable sections required for a Class B nuclear vessel, including Code cases 1177-5, 1290-1, 1330-1, 1413, and 1431. As described in UFSAR Section 3.8.2.5.1, shutdowns and startups do not occur with a frequency that required a design for fatigue failure, and therefore there is no TLAA for the SQN containment vessels.

Analyses were identified for bellows assemblies for the penetrations that stated they were qualified for 7000 cycles of the design displacements. The design displacements will occur much less than 7000 cycles. Therefore, the associated penetration bellows are qualified for the period of extended operation. The analysis remains valid for the period of extended operation in accordance with 10 CFR 54.21(c)(1)(i).

A.2.5 Other Plant-Specific TLAAs

A.2.5.1 Underclad Cracking Analysis

Reactor vessel underclad cracking involves cracks in base metal forgings immediately beneath austenitic stainless steel cladding which are created as a result of the weld-deposited cladding process. Westinghouse performed an analysis of flaw growth associated with underclad cracking in 1971 concluding that reactor vessel integrity could be assured for the entire 40-year original plant license term. Underclad cracking only requires analysis if examinations have detected flaws (the analysis is not used to postulate flaws). Indications that could be representative of underclad cracking flaws have been detected on both SQN Unit 1 and Unit 2; therefore, the underclad cracking analysis is considered a TLAA for SQN Unit 1 and Unit 2.

To extend this analysis to 60 years in support of license renewal, WCAP-15338-A, "A Review of Cracking Associated with Weld Deposited Cladding in Operating PWR Plants," provided an updated analysis of underclad cracking for Westinghouse units. This report examined the growth of underclad cracks in susceptible plants and showed that the crack growth would not threaten reactor vessel integrity through 60 years of plant operation. The NRC in their safety evaluation of this WCAP stated that any Westinghouse Owners Group plant may reference this report in a license renewal application to satisfy the requirements of 10CFR 54.21(c)(1)

regarding evaluation of TLAAs for reactor vessel components. The safety evaluation specified the following two renewal applicant action items.

(1) Verify the plant is bounded by the WCAP-15338 report, specifically the number of cycles used in the analysis.

(2) Ensure the TLAA is identified in an FSAR supplement.

Transient cycles shown in WCAP-15338-A are equal to or greater than the number of design cycles for SQN Unit 1 and Unit 2. This UFSAR supplement satisfies the second requirement.

Therefore, this analysis has been projected per 10 CFR 54.21(c)(1)(ii).

A.2.5.2 Crane Load Cycles Analysis

Cranes that were designed to Crane Manufacturer's Association of America Specification #70 (CMAA-70) have cycles specified as part of their design analysis. While there is no analysis that involves time-limited assumptions defined by the current operating term, for example, 40 years, crane cycle limits are nevertheless evaluated as a TLAA for cranes that were designed to CMAA-70.

A review of the cranes at SQN was performed to determine which cranes were designed to CMAA-70. The manipulator cranes at SQN Units 1 and 2 included CMAA-70 in their design specification. The lowest number of load cycles a crane is qualified for under CMAA-70 is 100,000 cycles. SQN determined that the number of lifts each manipulator crane would experience in 60 years with a 1.25 multiplier for margin is ~20,500. Therefore, the expected number of lifts is well below the qualification in CMAA-70, and the manipulator cranes TLAA remains valid for the period of extended operation in accordance with 10 CFR 54.21(c)(1)(i).

No other cranes at SQN were built to CMAA-70 requirements. Section 3.8.6 of the UFSAR provides descriptions of the cranes, and UFSAR Section 3.12 describes the control of heavy loads and the NUREG-0612 responses. The SQN responses to NUREG-0612 and the review of the site cranes identified that the reactor building polar crane and the auxiliary building crane were not built to the structural fatigue requirements of CMAA-70.

A.2.5.3 Leak-Before-Break Analysis

As described in UFSAR Section 3.6, the dynamic effects of double-ended postulated pipe ruptures in the reactor coolant loops have been eliminated from the SQN design basis by the application of leak-before-break (LBB) technology in accordance with the rule change to General Design Criterion 4. Authorization for their elimination is based on fracture mechanics analyses results performed by Westinghouse.

LBB analyses consider the thermal aging of the CASS piping and fatigue transients that drive flaw growth during operation of the plant. Because these two analysis considerations could be defined by the current term of operation, LBB analyses were further reviewed as potential TLAAs for SQN.

Thermal Aging of CASS

Thermal aging results in an increase in the yield strength of CASS and a decrease in fracture toughness, the decrease being proportional to the level of ferrite in the material. Thermal aging in these stainless steels will continue until the saturation, or fully aged, point is reached. Fully aged, bounding fracture toughness values were used in the evaluation for the cast fittings. As the LBB evaluations for both units use saturated (fully aged) fracture toughness properties, the evaluation of the thermal aging of CASS portion of the analysis does not have a material property time-dependency and is not considered a TLAA.

Fatigue Crack Growth

The LBB analysis determined that fatigue crack growth effects will be very small when analyzing for the full set of design transients. The basis of the evaluation of fatigue crack growth effects in the LBB analysis will remain unchanged so long as the number of transient occurrences remains below the number assumed for the analysis of fatigue crack growth effects. For SQN Unit 1 and Unit 2, no transient is projected to exceed the number of analyzed cycles prior to the end of the period of extended operation. Therefore, the LBB TLAA remains valid for the period of extended operation in accordance with 10 CFR 54.21(c)(1)(i).

A.3 10 CFR 54.37(b) Newly Identified Systems, Structures and Components

10 CFR 54.37(b) states that after a renewed license is issued, the Final Safety Analysis Report (FSAR) update required by 10 CFR 50.71(e) must include any systems, structures, and components (SSCs) newly identified that would have been subject to an aging management review or evaluation of time-limited aging analyses in accordance with 10 CFR 54.21 and the FSAR update must describe how the effects of aging will be managed such that the intended functions(s) in 10 CFR 54.4(b) will be effectively maintained during the period of extended operation. The intent of 10 CFR 54.37(b) is to capture those SSCs that, if they had been identified at the time of the license renewal application, would have been subject to an aging management review or evaluation of time-limited aging analyses. This section of Appendix A contains the newly identified SSC pursuant to the requirements of 10 CFR 54.37(b).

A.3.1 AERCW Pump Structure

The AERCW pump structure, located south of the diesel generator building, is designed as Category I structure. The entire AERCW System has been abandoned. The AERCW pump structure is reinforced concrete comprising of reinforced concrete walls and floor supported on a concrete base foundation on structural fill.

The AERCW Pump structure does not contain safety-related systems or components, but adjoins the ERCW Valve Box 4 and 5 structures. The ERCW Valve Box 4 and 5 structures provide tornado missile protection for safety-related ERCW system piping and components.

The AERCW pump structure has no intended functions for 10 CFR 54.4(a)(1) or (a)(3).

The AERCW pump structure has the following intended function for 10 CFR 54.4 (a)(2).

- Provides physical support, shelter, and protection for non-safety related systems, structures, and components whose failure could prevent satisfactory accomplishment of functions(s) identified for 10 CFR 54.4 (a)(1). 10 CFR 54.4 (a)(2)

The following aging management program manages the aging effects for the AERCW pump structure and structural components:

- Structures Monitoring Program (SQN FSAR Section A.1.40)

A.3.2 ERCW Valve Boxes 1, 3, 4, 5 and 6 and Thermometer Boxes 1 and 2

ERCW Valve Boxes 1, 3, 4, 5 and 6 and Thermometer Boxes 1 and 2 are reinforced concrete comprising of reinforced concrete walls and removable roofs supported on concrete base foundations on structural fill. ERCW Valve Boxes 4 and 5 west walls have structural carbon steel tornado missile barrier plates covering penetrations in the concrete wall.

ERCW Valve Boxes 1, 3, 4, 5 and 6 and Thermometer Boxes 1 and 2 house sections of safety-related ERCW piping and components. The ERCW piping and components are supported seismically by the surrounding soil covering and are not physically attached to any portion of the ERCW Valve and Thermometer Box structure. E R C W Valve and Thermometer Box structures provide tornado missile protection for safety related ERCW piping and components.

ERCW Valve Boxes 1, 3, 4, 5 and 6 and Thermometer Boxes 1 and 2 have the following intended functions for 10 CFR 54.4(a)(1).

- Provides physical support, shelter, and protection for safety-related systems, structures, and components. 10 CFR 54.4(a)(1)

ERCW Valve Boxes 1, 3, 4, 5 and 6 and Thermometer Boxes 1 and 2 have the following intended function for 10 CFR 54.4 (a)(3).

- Provides physical support, shelter, and protection for systems, structures, and components relied upon in safety analyses or plant evaluations to perform a function that demonstrates compliance with the Commissions' regulations for Fire Protection (10 CFR 50.48). 10 CFR 54.4 (a)(3).

The ERCW Valve Boxes 1, 3, 4, 5 and 6 and Thermometer Boxes 1 and 2 have no intended function for 10 CFR 54.4 (a)(2).

The following aging management program manages the aging effects for ERCW Valve Boxes 1, 3, 4, 5 and 6 and Thermometer Boxes 1 and 2 structural components:

- Structures Monitoring Program (SQN FSAR Section A.1.40).

A.3.3 High Pressure Fire Protection Inaccessible Cables

Non-EQ HPFP cables from the 480 V Shutdown Boards to the Flood Mode Pump A-A (0-PMP-026-0001A-B) and B-B (0-PMP-026-0011A-B) are Safety-Related and have a LR Intended Function. In the LRA Appendix B, the cables to these two Flood Mode Pumps were identified as being in a wetted environment since they are routed through manholes.

Power cables (greater than or equal to 400 V) exposed to wet, submerged, or other adverse environmental conditions for which they were not designed are susceptible to a water treeing aging effect of reduced insulation resistance, causing a decrease in the dielectric strength of the conductor insulation. This can potentially lead to failure of the cable's insulation system.

The following aging management program manages the aging effects for the above cables by periodic testing of cable insulation resistance and inspecting for water in manholes:

- Non-EQ Inaccessible Power Cables (>=400 V to 35 kV) (SQN FSAR A.1.25).

A.3.4 Main Feedwater Control Mechanical Components – Drawing 1,2-724A850

The purpose of the feedwater control system 046 is to regulate the flow of main feedwater to the steam generators. The feedwater control system includes mechanical hydraulic control components support the operation of the main feedwater pumps. These mechanical components have no safety function. The passive mechanical components in this system are in the Turbine Building.

The feedwater control system (as shown on this drawing) have no intended functions for 10 CFR 54.4 (a)(1) or 10 CFR 54.4 (a)(3).

The feedwater control system has the following intended function for 10 CFR 54.4 (a)(2).

- Maintain integrity of non-safety-related components such that no physical interaction with safety-related components could prevent satisfactory accomplishment of a safety function (pressure boundary).

The additional component types, materials, environments and aging effects for the Main Feedwater control system and associated aging management programs are:

Component Type	Intended Function	Material	Environment	Aging Effect	Aging Management Program
Tubing	Pressure Boundary	Carbon Steel	Air - indoor (external)	Loss of Material	External Surfaces Monitoring
Tubing	Pressure Boundary	Carbon Steel	Lube Oil (Internal)	Loss of Material	Oil Analysis Program
Piping	Pressure Boundary	Stainless Steel	Air - indoor (external)	Loss of Material	None

Component Type	Intended Function	Material	Environment	Aging Effect	Aging Management Program
Piping	Pressure Boundary	Stainless Steel	Lube Oil (Internal)	Cracking	Oil Analysis Program
Piping	Pressure Boundary	Stainless Steel	Lube Oil (Internal)	Loss of Material	Oil Analysis Program
Filter Housing	Pressure Boundary	Aluminum	Air - indoor (external)	Loss of Material	None
Filter Housing	Pressure Boundary	Aluminum	Lube Oil (Internal)	Cracking	Oil Analysis Program
Filter Housing	Pressure Boundary	Aluminum	Lube Oil (Internal)	Loss of Material	Oil Analysis Program

A.4 REFERENCES

A.4-1 TVA letter to NRC, Sequoyah Nuclear Plant, Units 1 and 2 License Renewal (ADAMS Accession No. ML13024A004), dated January 7, 2013

A.4-2 NRC letter to TVA Safety Evaluation Report Related to the Sequoyah Nuclear Plant, Units 1 and 2, License Renewal Application (TAC NOS. MF0481 and MF0482), dated January 29, 2015.

NUREG-2181, Safety Evaluation Report, Related to the License Renewal of Sequoyah Nuclear Plant Units 1 and 2, published July 2015.

NRC letter to TVA, Supplemental Safety Evaluation Report Related to the Sequoyah Nuclear Plant, Units 1 and 2, License Renewal Application (TAC NOS. MF0481 and MF0482) dated September 14, 2015.

NRC letter to TVA, Issuance of Renewed Facility Operating Licenses Numbers DPR-77 and DPR-79 for Sequoyah Nuclear Plant, Units 1 and 2, dated September 25, 2015.

13.9.2 License Renewal - Commitment List

The License Renewal Commitment List represents the regulatory commitments that TVA made related to aging management programs (AMPs) to manage the aging effects of structures and components. These regulatory commitments are managed and tracked by TVA for completion as part of SQN's License Renewal Program.

No.	COMMITMENT	LRA SECTION / AUDIT ITEM
1	A. Implement the **Aboveground Metallic Tanks** Program as described in UFSAR Section 13.9.1 Appendix A.1.1. [3.0.3-1, Requests 3, ML13312A005.11/4/13] B. Aboveground Metallic Tanks Program includes outdoor tanks on soil or concrete and indoor large volume water tanks (excluding the fire water storage tanks) situated on concrete that are designed for internal pressures approximating atmospheric pressure. This program includes the Refueling Water Storage Tanks and the Condensate Storage Tanks. Periodic external visual and surface examinations are sufficient to monitor degradation. Internal visual and surface examinations are conducted in conjunction with measuring the thickness of the tank bottoms to ensure that significant degradation is not occurring and that the component's intended function is maintained during the PEO. Internal inspections are conducted whenever the tank is drained, with a minimum frequency of at least once every 10 years, beginning in the 5-year interval prior to the PEO. [3.0.3-1 item 5a, ML13294A462, E-2 – 4 of 8, 10/17/13]	B.1.1
2	A. Revise **Bolting Integrity Program** procedures to ensure the actual yield strength of replacement or newly procured bolts will be less than 150 ksi B. Revise Bolting Integrity Program procedures to include the additional guidance and recommendations of EPRI NP-5769 for replacement of ASME pressure-retaining bolts and the guidance provided in EPRI TR-104213 for the replacement of other pressure-retaining bolts. C. Revise Bolting Integrity Program procedures to specify a corrosion inspection and a check-off for the transfer tube isolation valve flange bolts. D. Revise Bolting Integrity Program procedures to visually inspect a representative sample of normally submerged ERCW system bolts at least once every 5 years. (ML13252A036, Enc 1, B.1.2-2a, p20)	B.1.2
3	A. Implement the **Buried and Underground Piping and Tanks Inspection Program** as described in UFSAR Section 13.9.1 Appendix A, Section A.1.4. B. Cathodic protection will be provided based on the guidance of NUREG-1801 Rev.2, section XI.M41, as modified by LR-ISG-2015-01.	B.1.4

No.	COMMITMENT	LRA SECTION / AUDIT ITEM
4	A. Revise **Compressed Air Monitoring Program** procedures to include the standby diesel generator (DG) starting air subsystem. B. Revise Compressed Air Monitoring Program procedures to include maintaining moisture and other contaminants below specified limits in the standby DG starting air subsystem. C. Revise Compressed Air Monitoring Program procedures to apply a consideration of the guidance of ASME OMa-S/G-1998, Part 17; EPRI NP-7079; and EPRI TR-108147 to the limits specified for the air system contaminants D. Revise Compressed Air Monitoring Program procedures to maintain moisture, particulate size, and particulate quantity below acceptable limits in the standby DG starting air subsystem to mitigate loss of material. E. Revise Compressed Air Monitoring Program procedures to include periodic and opportunistic visual or nondestructive examination(NDE) inspections of surface conditions consistent with frequencies described in ASME O/Ma-SG-1998, Part 17 of accessible internal surfaces such as compressors, dryers, after-coolers, and filter boxes of the following compressed air systems: • Diesel starting air subsystem • Auxiliary controlled air subsystem • Nonsafety-related controlled air subsystem F. Revise Compressed Air Monitoring Program procedures to monitor and trend moisture content in the standby DG starting air subsystem. G. Revise Compressed Air Monitoring Program procedures to include consideration of the guidance for acceptance criteria in ASME OMa-S/G-1998, Part 17, EPRI NP-7079; and EPRI TR-108147.	B.1.5

No.	COMMITMENT	LRA SECTION / AUDIT ITEM
5	A. Revise **Diesel Fuel Monitoring Program** procedures to monitor and trend sediment and particulates in the standby DG day tanks. B. Revise Diesel Fuel Monitoring Program procedures to monitor and trend levels of microbiological organisms in the seven-day storage tanks. C. Revise Diesel Fuel Monitoring Program procedures to include a ten-year periodic inspection of the standby DG diesel fuel oil day tanks and high pressure fire protection (HPFP) diesel fuel oil storage tank. These inspections will be performed at least once during the ten-year period prior to the period of extended operation and at succeeding ten-year intervals. If a visual inspection is not possible, a volumetric inspection will be performed. The HPFP diesel fuel oil storage tank inspections will be supplemented by cleaning, if necessary based on inspection results, to remove any accumulated sediment. The standby DG diesel fuel oil day tank inspections will be supplemented by cleaning, to remove sediment, if warranted based on the results of a) periodic cleaning of the yard fuel oil storage tanks and seven-day tanks, b) periodic cleaning of the fuel pump suction strainers and filters, and c) day tank sediment and particulate monitoring. D. Revise Diesel Fuel Monitoring Program procedures to include a volumetric examination of affected areas of the diesel fuel oil tanks, if evidence of degradation is observed during visual inspection. The scope of this enhancement includes the standby DG seven-day fuel oil storage tanks, standby DG fuel oil day tanks, and HPFP diesel fuel oil storage tank and is applicable to the inspections performed during the ten-year period prior to the PEO and succeeding ten-year intervals.	B.1.8

No.	COMMITMENT	LRA SECTION / AUDIT ITEM
6 (6)	A. Revise **External Surfaces Monitoring Program** procedures to clarify that periodic inspections of systems in scope and subject to aging management review for license renewal in accordance with 10 CFR 54.4(a)(1) and (a)(3) will be performed. Inspections shall include areas surrounding the subject systems to identify hazards to those systems. Inspections of nearby systems that could impact the subject systems will include SSCs that are in scope and subject to aging management review for license renewal in accordance with 10 CFR 54.4(a)(2). B. Revise External Surfaces Monitoring Program procedures to include instructions to look for the following related to metallic components: • Corrosion and material wastage (loss of material). • Leakage from or onto external surfaces loss of material). • Worn, flaking, or oxide-coated surfaces (loss of material). • Corrosion stains on thermal insulation (loss of material). • Protective coating degradation (cracking, flaking, and blistering). • Leakage for detection of cracks on the external surfaces of stainless steel components exposed to an air environment containing halides. C. Revise External Surfaces Monitoring Program procedures to include instructions for monitoring aging effects for flexible polymeric components, including manual or physical manipulations of the material, with a sample size for manipulation of at least ten percent of the available surface area. The inspection parameters for polymers shall include the following: • Surface cracking, crazing, scuffing, dimensional changes (e.g., ballooning and necking). • Discoloration. • Exposure of internal reinforcement for reinforced elastomers (loss of material). • Hardening as evidenced by loss of suppleness during manipulation where the component and material can be manipulated. D. Revise External Surfaces Monitoring Program procedures to specify the following for insulated components. • Periodic representative inspections are conducted during each 10-year period during the PEO. • For a representative sample of outdoor components, except tanks, and indoor components, except tanks, identified with more than nominal degradation on the exterior of the component, insulation is removed for visual inspection of the component surface. Inspections include a minimum of 20 percent of the in-scope piping length for each material type (e.g., steel, stainless steel, copper alloy, aluminum). For components with a configuration which does not conform to a 1-foot axial length determination (e.g., valve, accumulator), 20 percent of the surface area is inspected. Inspected components are 20% of the population of each material type with a maximum of 25. Alternatively, insulation is removed and component inspections performed for any combination of a minimum of 25 1-foot axial length sections and individual components for each material type (e.g., steel, stainless steel, copper alloy, aluminum.)	B.1.10

No.	COMMITMENT	LRA SECTION / AUDIT ITEM

(6)	• For a representative sample of indoor components, except tanks, operated below the dew point, which have not been identified with more than nominal degradation on the exterior of the component, the insulation exterior surface or jacketing is inspected. These visual inspections verify that the jacketing and insulation is in good condition. The number of representative jacketing inspections will be at least 50 during each 10-year period.
	If the inspection determines there are gaps in the insulation or damage to the jacketing that would allow moisture to get behind the insulation, then removal of the insulation is required to inspect the component surface for degradation.
	• For a representative sample of indoor insulated tanks operated below the dew point and all insulated outdoor tanks, insulation is removed from either 25 1-square foot sections or 20 percent of the surface area for inspections of the exterior surface of each tank. The sample inspection points are distributed so that inspections occur on the tank dome, sides, near the bottom, at points where structural supports or instrument nozzles penetrate the insulation, and where water collects (for example on top of stiffening rings).
	• Inspection locations are based on the likelihood of corrosion under insulation (CUI). For example, CUI is more likely for components experiencing alternate wetting and drying in environments where trace contaminants could be present and for components that operate for long periods of time below the dew point.
	• If tightly adhering insulation is installed, this insulation should be impermeable to moisture and there should be no evidence of damage to the moisture barrier. Given that the likelihood of CUI is low for tightly adhering insulation, a minimal number of inspections of the external moisture barrier of this type of insulation, although not zero, will be credited toward the sample population.
	• Subsequent inspections will consist of an examination of the exterior surface of the insulation for indications of damage to the jacketing or protective outer layer of the insulation, if the following conditions are verified in the initial inspection.
	  • No loss of material due to general, pitting or crevice corrosion, beyond that which could have been present during initial construction
	  • No evidence of cracking
	Nominal degradation is defined as no loss of material due to general, pitting, or crevice corrosion, beyond that which could have been present during initial construction, and no evidence of cracking. If the external visual inspections of the insulation reveal damage to the exterior surface of the insulation or there is evidence of water intrusion through the insulation (e.g. water seepage through insulation seams/joints), periodic inspections under the insulation will continue as described above.
	[3.0.3-1 Request 6a, ML13357A722, E-1 – 24 of 43, 12/16/13]
	
	E. Revise External Surfaces Monitoring Program procedures to include acceptance criteria. Examples include the following:	

No.	COMMITMENT	LRA SECTION / AUDIT ITEM
(6)	• Stainless steel should have a clean shiny surface with no discoloration. • Other metals should not have any abnormal surface indications. • Flexible polymers should have a uniform surface texture and color with no cracks and no unanticipated dimensional change, no abnormal surface with the material in an as-new condition with respect to hardness, flexibility, physical dimensions, and color. • Rigid polymers should have no erosion, cracking, checking or chalks. F. For a representative sample of outdoor insulated components and indoor insulated components operated below the dew point, which have been identified with more than nominal degradation on the exterior of the component, insulation is removed for inspection of the component surface. For a representative sample of indoor insulated components operated below the dew point, which have not been identified with more than nominal degradation on the exterior of the component, the insulation exterior surface is inspected. These inspections will be conducted during each 10-year period during the PEO, [3.0.3-1 Request 6a, ML13357A722, E-1 – 23 of 43, 12/16/13] G. Specific, measurable, actionable/attainable and relevant acceptance criteria are established in the maintenance and surveillance procedures or are established during engineering evaluation of the degraded condition. [ML13357A722, E-1 – 43 of 43, 12/16/13]	

No.	COMMITMENT	LRA SECTION / AUDIT ITEM
7	A. Revise **Fatigue Monitoring Program** procedures to monitor and track critical thermal and pressure transients for components that have been identified to have a fatigue Time Limited Aging Analysis. B. Fatigue usage calculations that consider the effects of the reactor water environment will be developed for a set of sample reactor coolant system (RCS) components. This sample set will include the locations identified in NUREG/CR-6260 and additional plant-specific component locations in the reactor coolant pressure boundary if they are found to be more limiting than those considered in NUREG/CR-6260. In addition, fatigue usage calculations for reactor vessel internals (lower core plate and control rod drive (CRD) guide tube pins) will be evaluated for the effects of the reactor water environment. F_{en} factors will be determined as described in Section 4.3.3. C. Fatigue usage factors for the RCS pressure boundary components will be adjusted as necessary to incorporate the effects of the Cold Overpressure Mitigation System (COMS) event (i.e., low temperature overpressurization event) and the effects of structural weld overlays. D. Revise Fatigue Monitoring Program procedures to provide updates of the fatigue usage calculations and cycle-based fatigue waiver evaluations on an as-needed basis if an allowable cycle limit is approached, or in a case where a transient definition has been changed, unanticipated new thermal events are discovered, or the geometry of components have been modified. E. Revise Fatigue Monitoring Program procedures to track the tensioning cycles for the reactor coolant pump hydraulic studs.	B.1.11
8	A. Revise **Fire Protection Program** procedures to include an inspection of fire barrier walls, ceilings, and floors for any signs of degradation such as cracking, spalling, or loss of material caused by freeze thaw, chemical attack, or reaction with aggregates. B. Revise Fire Protection Program procedures to provide acceptance criteria of no significant indications of concrete cracking, spalling, and loss of material of fire barrier walls, ceilings, and floors and in other fire barrier materials.	B.1.12

No.	COMMITMENT	LRA SECTION / AUDIT ITEM
9	Implement the **Fire Water System Program** (FWSP) as described in UFSAR Section 13.9.1, Appendix A, Section A.1.13. **A.** [Blank] **B**. [Blank] **C**. Revise FWSP procedures to ensure-sprinkler heads are tested in accordance with NFPA-25 (2011 Edition), Section 5.3.1 [3.0.3-1 Request 4a] **D**. [Blank] **E.** Revise FWSP procedures to include acceptance criteria for periodic visual inspection of fire water system internals for corrosion, minimum wall thickness, and the absence of biofouling in the sprinkler system that could cause corrosion in the sprinklers. **F**. [Blank] **G.** Revise FWSP procedures to include periodically remove a representative sample of components, such as sprinkler heads or couplings, within **five years prior to the PEO, and every five years** during the PEO, to perform a visual internal inspection of the dry fire water system piping for evidence of corrosion, and loss of wall thickness, and foreign material that may result in flow blockage using the methodology described in NFPA-25 Section 14.2.1. The acceptance criteria shall be “no debris” (i.e., no corrosion products that could impede flow or cause downstream components to become clogged). Any signs of abnormal corrosion or blockage will be removed, its source determined and corrected, and entered into the CAP. Due dates: SQN1: within five years prior to 03/17/20, and every five years during the PEO SQN2: within five years prior to 03/15/21, and every five years during the PEO [ML14113A208 pg E-1-6 due dates] [3.0.3-1, Req 4a.d, i to vi, ML13357A722, E-1 – 11], [ML14057A808, 3.0.3-1.4b, E-1 p25]	B.1.13

No.	COMMITMENT	LRA SECTION / AUDIT ITEM
(9)	**H**. Revise FWSP procedures to perform an obstruction evaluation in accordance with NFPA-25 (2011 Edition), Section 14.3.1. **I.** Revise FWSP procedures to conduct follow-up volumetric examinations if internal visual inspections detect surface irregularities that could be indicative of wall loss below nominal pipe wall thickness. **J.** Revise FWSP procedures to annually inspect the fire water storage tank exterior painted surface for signs of degradation. If degradation is identified, conduct follow-up volumetric examinations to ensure wall thickness is equal to or exceeds nominal wall thickness. The fire water storage tanks will be inspected in accordance with NFPA-25 (2011 Edition) requirements. **K.** Revise FWSP procedures to include a fire water storage tank interior inspection every five years that includes inspections for signs of pitting, spalling, rot, waste material and debris, and aquatic growth. Include in the revision direction to perform fire water storage tank interior coating testing, if any degradation is identified, in accordance with ASTM D 3359 or equivalent, a dry film thickness test at random locations to determine overall coating thickness; and a wet sponge test to detect pinholes, cracks or other compromises of the coating. If there is evidence of pitting or corrosion ensure the FWSP procedures direct performance of an examination to determine wall and bottom thickness. **L**. [Blank] **M**. Revise FWSP procedures to perform an annual spray head discharge pattern tests from all open spray nozzles to ensure that patterns are not impeded by plugged nozzles, to ensure that nozzles are correctly positioned, and to ensure that obstructions do not prevent discharge patterns from wetting surfaces to be protected. Where the nature of the protected critical equipment or property is such that water cannot be discharged, the nozzles shall be inspected for proper orientation and the system tested with air, smoke or some other medium to ensure that the nozzles are not obstructed. Ensure that the dry piping is unobstructed downstream of deluge valves protecting indoor areas containing critical equipment by flow testing with air, smoke or other medium from deluge valve through the sprinkler heads. Based on the trip testing of the deluge valves without flow through the downstream piping and sprinkler heads, additional testing in the RCA or areas containing critical equipment is not warranted due to the addition of risk-significant activities and the production of additional radwaste. [3.0.3-1.4a, ML13357A722, E-1 – 14 of 43, 12/16/13]	

No.	COMMITMENT	LRA SECTION / AUDIT ITEM
(9)	**N.** Revise FWSP procedures to perform an internal inspection of the accessible piping associated with the strainer inspections for corrosion and foreign material that may cause blockage. Document any abnormal corrosion or foreign material in the CAP. [3.0.3-1, Request 4a, ML13357A722, E-1 – 15 of 43, 12/16/13] **O.** Revise FWSP procedures to perform 25 main drain tests every 18-months with at least one main drain test performed in each of the following buildings: (1) control building, (2) auxiliary building, (3) turbine building, and (4) diesel generator building. The results of the main drain tests from the three 18-month inspection intervals will be evaluated to determine if the NFPA 25 (2014 Edition) main drain test guidance can be applied to the number of main drain tests performed (.i.e., Section 13.2.5, "A main drain test shall be conducted annually for each water supply lead-in to a building water-based fire protection system to determine whether there has been a change in the condition of the water supply" and Section 13.2.5.1 "Where the lead-in to a building supplies a header or manifold serving multiple systems, a single main drain test shall be performed.") Any flow blockage or abnormal discharge identified during flow testing or any change in delta pressure during the main drain testing greater than 10% at a specific location is entered into the CAP. Flow or main drain testing increases risk due to the potential for water contacting critical equipment in the area, and main drain testing in the RCAs increases the amount of liquid radwaste. Therefore, SQN will not perform main drain tests on every standpipe with an automatic water supply or on every system riser. [3.0.3-1, Request 4a, ML13357A722, E-1 – 15 of 43, 12/16/13] **P.** Revise FWSP procedures to perform One of the following inspection methods for those sections of dry piping described in NRC Information Notice (IN) 2013-06, where drainage is not occurring, to ensure there is no flow blockage in each five-year interval beginning with the five-year period before the PEO: (a) Perform a flow test or flush sufficient to detect potential flow blockage. (b) Remove sprinkler heads or couplings in the areas that do not drain and perform a 100% visual internal inspection to verify there are no signs of abnormal corrosion (wall thickness loss) or blockage. If option (a) is chosen, controls will be established to ensure potential blockage is not moved to another part of the system where it may be undetected. In each five-year interval during the PEO, 20% of the length of piping segments that cannot be drained or piping segments that allow water to collect will be subjected to UT wall thickness examination. The piping examined during each inspection	

No.	COMMITMENT	LRA SECTION / AUDIT ITEM
(9)	interval will be piping that was not previously examined. [9.P is added ML14057A808, E-1 p23, 3.0.3-1.4b] [9.P(c) is deleted in ML14197A267 pg E-1 - 5] If the results of a 100% internal visual inspection are acceptable, and the segment is not subsequently wetted, no further augmented tests or inspections will be performed. (3.0.3-1-3 Request 4c, ML14197A267 pg E-1 - 5)	
10	A. Revise **Flow Accelerated Corrosion** (FAC) **Program** procedures to implement NSAC-202L guidance for examination of components upstream of piping surfaces where significant wear is detected. B. Revise FAC Program procedures to implement the guidance in LR-ISG-2012-01, which will include a susceptibility review based on internal operating experience, external operating experience, EPRI TR-1011231, Recommendations for Controlling Cavitation, Flashing, Liquid Droplet Impingement, and Solid Particle Erosion in Nuclear Power Plant Piping, and NUREG/CR-6031, Cavitation Guide for Control Valves. [B.1.14-1 and B.1.38-1]. In addition, revise the FAC program procedures to include portions of the Essential Raw Cooling Water (ERCW) piping where Belzona coating is applied. These inspections are to be performed prior to the PEO, and pending results of the inspections, future inspections should be planned as part of the FAC program.	B.1.14
11	Revise **Flux Thimble Tube Inspection Program** procedures to include a requirement to address if the predictive trending projects that a tube will exceed 80% wall wear prior to the next planned inspection, then initiate a Service Request (SR) to define actions (i.e., plugging, repositioning, replacement, evaluations, etc.) required to ensure that the projected wall wear does not exceed 80%. If any tube is found to be >80% through wall wear, then initiate a Service Request (SR) to evaluate the predictive methodology used and modify as required to define corrective actions (i.e., plugging, repositioning, replacement, etc).	B.1.15

No.	COMMITMENT	LRA SECTION / AUDIT ITEM
12	A. Revise **Inservice Inspection–IWF Program** procedures to clarify that detection of aging effects will include monitoring anchor bolts for loss of material, loose or missing nuts, and cracking of concrete around the anchor bolts. B. Revise ISI - IWF Program procedures to include the following corrective action guidance. When an indication is identified on a component support exceeding the acceptance criteria of IWF-3400, but an evaluation concludes the support is acceptable for service, the program shall require examination of additional similar/adjacent supports per IWF-2430 unless the evaluation of the identified condition against similar/adjacent supports concludes that it would not adversely affect the design function of similar adjacent supports. This evaluation will be performed regardless of whether the program owner chooses to perform corrective measures to restore the component to its original design condition, per IWF-3112.3(b) or IWF-3122.3(b). [ML13190A276. E1-37of79, 7/1/13]	B.1.17
13	Inspection of **Overhead Heavy Load and Light Load** (Related to Refueling) **Handling Systems**: A. Revise program procedures to specify the inspection scope will include monitoring of rails in the rail system for wear; monitoring structural components of the bridge, trolley and hoists for the aging effect of deformation, cracking, and loss of material due to corrosion; and monitoring structural connections/bolting for loose or missing bolts, nuts, pins or rivets and any other conditions indicative of loss of bolting integrity. B. Revise program procedures to include the inspection and inspection frequency requirements of ASME B30.2. C. Revise program procedures to clarify that the acceptance criteria will include requirements for evaluation in accordance with ASME B30.2 of significant loss of material for structural components and structural bolts and significant wear of rail in the rail system. D. Revise program procedures to clarify that the acceptance criteria and maintenance and repair activities use the guidance provided in ASME B30.2	B.1.18

No.	COMMITMENT	LRA SECTION / AUDIT ITEM
14	A. Implement the **Internal Surfaces in Miscellaneous Piping and Ducting Components Program** as described in UFSAR 13.9.1, Appendix A, section A.1.19. B. Specific, measurable, actionable/attainable and relevant acceptance criteria are established in the maintenance and surveillance procedures or are established during engineering evaluation of the degraded condition. [ML13357A722, E-1 – 43 of 43, 12/16/13]	B.1.19
15	Implement the **Metal Enclosed Bus Inspection Program** as described in UFSAR Section 13.9.1 Appendix A.1.21.	B.1.21
16	A. Revise **Neutron Absorbing Material Monitoring Program** procedures to perform blackness testing of the Boral coupons within the ten years prior to the PEO and at least every ten years thereafter based on initial testing to determine possible changes in boron-10 areal density. B. Revise Neutron Absorbing Material Monitoring Program procedures to relate physical measurements of Boral coupons to the need to perform additional testing. C. Revise Neutron Absorbing Material Monitoring Program procedures to perform trending of coupon testing results to determine the rate of degradation and to take action as needed to maintain the intended function of the Boral.	B.1.22
17	Implement the **Non-EQ Cable Connections Program** as described in UFSAR 13.9.1, Appendix A, Section A.1.24.	B.1.24
18	Implement the **Non-EQ Inaccessible Power Cable** (400 V to 35 kV) **Program** as described in UFSAR 13.9.1, Appendix A, Section A.1.25. A. **B.1.25.1a** [ML13296A017, E-1-12 of 25, 10/21/13] 1. [Blank] 2. [Blank] 3. Prior to the PEO, the license renewal commitment for the Non-EQ Inaccessible Power Cables (400 V to 35 kV) Program will establish diagnostic testing activities on all inaccessible power cables in the 400 V to 35kV range that are in the scope of license renewal and subject to aging management review. 4. <u>[Blank]</u> 5. Once 18.A.1, 2, and 4 are fully completed, these commitments can be deleted from this list or the UFSAR .	B.1.25

No.	COMMITMENT	LRA SECTION / AUDIT ITEM
19	Implement the **Non-EQ Instrumentation Circuits Test Review Program** as described in UFSAR 13.9.1, Appendix A, Section A.1.26.	B.1.26
20	Implement the **Non-EQ Insulated Cables and Connections Program** as described in UFSAR 13.9.1, Appendix A, Section A.1.27.	B.1.27
21	Implement the **Oil Analysis Program** as described UFSAR 13.9.1, Appendix A, Section A.1.28.	B.1.28
22	Implement the **One-Time Inspection Program** as described in UFSAR Section 13.9.1 A.1.29.	B.1.29
23	Implement the **One-Time Inspection – Small Bore Piping Program** as described in UFSAR 13.9.1, Appendix A, Section A.1.30.	B.1.30
24	A. Revise **Periodic Surveillance and Preventive Maintenance Program** procedures as necessary to include activities provided in UFSAR 13.9.1, Appendix A, Section A.1.31. B. For in-scope components that have internal Service Level III or Other coatings, initial inspections will begin no later than the last scheduled refueling outage prior to the PEO. Subsequent inspections will be performed based on the initial inspection results. [3.0.3-1, Request 3, ML13312A005, pages E-1- 2,5,7 of 51] Note: The commitment was revised by ML14057A808, E1 p8 and replaced by commitments C, D, E, F, and G. Note 2: The Pressurizer Relief Tanks (PRTs) for pressure boundary and the Cask Decontamination Collector Tank (CDCT) are not considered in-scope,. Although ERCW is in-scope, evaluation of the failure modes of the Belzona coating have determined inspection is not required. C. Revise Periodic Surveillance and Preventive Maintenance Program procedures to perform a minimum of five MIC degradation inspections per year until the rate of MIC occurrences no longer meets the criteria for recurring internal corrosion. [CNL-14-105, E1p11] If more than one MIC-caused leak or a wall thickness less than T_{min} is identified in the yearly inspection period, an additional five MIC inspections over the following 12 month period will be performed for each MIC leak or finding of wall thickness less than T_{min}. The total	B.1.31

No.	COMMITMENT	LRA SECTION / AUDIT ITEM
(24)	number of inspections need not exceed a total of 25 MIC inspections per year. [ML14057A808, E-1 p8, 3.0.3-1-3a] Prior to the period of extended operation, select a method (or methods) from available technologies for inspecting internal surfaces of buried piping (System 26/HPFP Firewater and 67/ERCW) that provides suitable indication of piping wall thickness for a representative set of buried piping locations to supplement the set of selected inspection locations [3.0.3-1, Req 1a, ML13357A722, E-1 – 4 of 43, 12/16/13] [3.0.3-1 Req 1, ML13294A462, E-1- 6 of 13, 10/17/13] [Moved 9.F to 24.C in ML14057A808, E-1 p13,29] **D**. 1. Prior to the PEO, perform a visual inspection of a 50% sample of the coated piping in each of the following coated piping systems or an area equivalent to the entire inside surface of 73 1-foot piping segments for each combination of type of coating, substrate material, and environment. Inspection location selection will be based on an evaluation of the effect of a coating failure on component intended functions, potential problems identified during prior inspections, and service life history. Visually inspect the surface condition of the coated components to manage loss of coating integrity due to cracking, debonding, delamination, peeling, flaking, and blistering. In addition, if coatings are credited for corrosion prevention, the base material (in the vicinity of delamination, peeling, or blisters where base metal has been exposed) will be inspected to determine if corrosion has occurred. **Piping**: i. High pressure fire protection (cement-lined piping) 2. With the exception of the EDG 7-day fuel oil tanks, perform subsequent inspections of coatings based on the following. i. If no flaking, debonding, peeling, delamination, blisters, or rusting are observed, and any cracking and flaking has been found acceptable, subsequent inspections will be performed at least once every six years. If the coating is inspected on one train and no indications are found, the same coating on the redundant train would not be inspected during that inspection interval. ii. If the inspection results do not meet (i), yet a coating specialist has determined that no remediation is required, then subsequent inspections will be conducted every other refueling outage. iii. If coating degradation is observed that requires newly installed coatings, subsequent inspections will occur during each of the next two refueling outage intervals to establish a performance trend on the coating. EDG 7-day fuel oil tanks coating inspection: Subsequent coating inspections for the EDG 7-day fuel oil tanks will be at the same 10 year interval as TS Surveillance (Requirement 4.8.1.1.2.f [SAME REQUIREMENT IS NOW IN	

No.	COMMITMENT	LRA SECTION / AUDIT ITEM
(24)	TECHNICAL REQUIREMENTS MANUAL (TRM) AS TRV 8.8.4.1 UNDER ITS]. If any applied Belzona coating on the interior of the fuel oil tanks is peeling, delaminating, or blistering, then the condition will be repaired and entered into the CAP. Given the favorable SQN experience with the current Belzona repairs, it is justifiable to repair the existing coating applied to localized pits with Belzona and not inspect the coating for another 10 years, provided a detached Belzona engineering transportability evaluation has determined that the amount of Belzona applied will not migrate from the EDG 7-day tank to the day-tank. The evaluation will consider Belzona's 2.5 to 3 times higher specific gravity than diesel fuel, potential size of loosened Belzona particles, surface area and depth of the applied Belzona, diesel fuel fluid velocity in the immediate area of the applied Belzona, proximity of the repaired area to the suction line, and other factors. The application of Belzona to repair additional localized pitting in the 7-day EDG fuel oil tanks in the future will be installed per vendor specifications. An engineering evaluation will be performed to ensure that that additional Belzona cannot be transferable out of the tank during the interval between tank inspections and to determine if the interval of inspections should meet the more frequent inspection guidelines of LR-ISG-2013-01, or the NRC approved TS Surveillance Requirement (NOW TRM TRV 8.8.4.1 UNDER ITS) of 10 years. The engineering transportability evaluation will consider factors such as specific gravity, size, depth, surface area, and fluid velocity in the evaluation. [ML14057A808, E-1 p7] **E**. Prior to the PEO, perform a visual inspection of the following coated tanks and heat exchangers. Visually inspect the surface condition of the coated components to manage loss of coating integrity due to cracking, debonding, delamination, peeling, flaking, and blistering. **Tanks** i. Safety injection lube oil reservoir (where 0.006 inch plastic coating applied) ii. EDG 7-day fuel oil (where Belzona applied) iii. Condensate storage tank **Heat Exchangers** i. Electric board room chiller package (where Belzona applied) ii. Incore instrument room water chiller package B (where Belzona applied) [ML14057A808, E-1 p6] **F**. Any indication or relevant condition of degradation detected is evaluated. Include the following acceptance criteria for loss of coatings integrity: For any indication or relevant condition of coating degradation, the indication or relevant condition is evaluated for loss of coatings integrity. [ML14063A542, E-1 p2]	

No.	COMMITMENT	LRA SECTION / AUDIT ITEM
(24)	(1) Peeling and delamination are not permitted, (2) Cracking is not permitted if accompanied by delamination or loss of adhesion, and (3) Blisters are limited to intact blisters that are completely surrounded by sound coating bonded to the surface. Corrective Action: If delamination, peeling, or blisters are detected, follow-up physical testing will be performed where physically possible (i.e., sufficient room to conduct testing) on at least three locations. The testing will consist of destructive or nondestructive adhesion testing using ASTM International standards endorsed in Regulatory Guide 1.54. [ML14057A808, E-1 p6] **G**. 1. Coating inspections are performed by individuals certified to ANSI N45.2.6, "Qualifications of Inspection, Examination, and Testing Personnel for Nuclear Power Plants," and that subsequent evaluation of inspection findings is conducted by a nuclear coatings subject matter expert qualified in accordance with ASTM D 7108-05, "Standard Guide for Establishing Qualifications for a Nuclear Coatings Specialist." 2. An individual knowledgeable and experienced in nuclear coatings work will prepare a coating report that includes a list of locations identified with coating deterioration including, where possible, photographs indexed to inspection location, and a prioritization of the repair areas into areas that must be repaired before returning the system to service and areas where coating repair can be postponed to the next inspection. [ML14057A808, E-1 p6]	
25	A. Revise **Protective Coating Program** procedures to clarify that detection of aging effects will include inspection of coatings near sumps or screens associated with the emergency core cooling system. B. Revise Protective Coating Program procedures to clarify that instruments and equipment needed for inspection may include, but not be limited to, flashlights, spotlights, marker pen, mirror, measuring tape, magnifier, binoculars, camera with or without wide-angle lens, and self-sealing polyethylene sample bags. C. Revise Protective Coating Program procedures to clarify that the last two performance monitoring reports pertaining to the coating systems will be reviewed prior to the inspection or monitoring process.	B.1.32

No.	COMMITMENT	LRA SECTION / AUDIT ITEM
26	A. Revise **Reactor Head Closure Studs Program** procedures to ensure that replacement studs are fabricated from bolting material with actual measured yield strength less than 150 ksi. B. Revise Reactor Head Closure Studs Program procedures to exclude the use of molybdenum disulfide (MoS_2) on the reactor vessel closure studs and to refer to Reg. Guide 1.65, Rev1.	B.1.33
27	A. Revise **Reactor Vessel Internals Program** procedures to perform direct measurement of Unit 1 304 SS hold down spring height within three cycles of the beginning of the period of extended operation. If the first set of measurements is not sufficient to determine life, spring height measurements must be taken during the next two outages, in order to extrapolate the expected spring height to 60 years. (ML13324A982, 11/15/13, Enc 1, pages 24-25) B. Revise Reactor Vessel Internals Program procedures to include preload acceptance criteria for the Type 304 stainless steel hold-down springs in Unit 1. C. Continued monitoring of industry operating experience in the area of RVI Clevis Bolt will be performed and the program will be modified, if necessary. [ML14057A808, E-1 p35, B.1.34-8] D. [Blank] E. <u>Revise Reactor Vessel Internals Program procedures to identify the observation of cracking in the lower core barrel girth weld as the primary trigger for the EVT-1 expansion inspection of the upper core plate. [B.1.34-9d (follow-up) in Cnl-14-221, Enc 1.</u>	B.1.34

No.	COMMITMENT	LRA SECTION / AUDIT ITEM
28	A. Revise **Reactor Vessel Surveillance Program** procedures to consider the area outside the beltline such as nozzles, penetrations and discontinuities to determine if more restrictive pressure-temperature limits are required than would be determined by just considering the reactor vessel beltline materials. B.1 Revise Unit 2 Reactor Vessel Surveillance Program procedures to incorporate an NRC-approved schedule for capsule withdrawals to meet ASTM-E185-82 requirements, including the possibility of operation beyond 60 years (refer to the TVA Letter to NRC, "Sequoyah Nuclear Plant - Request To Revise The Reactor Pressure Vessel Surveillance Capsule Withdrawal Schedule for Unit 2" dated 12/23/16, ML16362A207; NRC final safety evaluation report approved on 12/04/17, ML17317A608). B.2 Revise Unit 1 Reactor Vessel Surveillance Program procedures to incorporate an NRC-approved schedule for capsule withdrawals to meet ASTM-E185-82 requirements, including the possibility of operation beyond 60 years (refer to the TVA Letter to NRC, Sequoyah Nuclear Plant, Revision to Reactor Pressure Vessel Surveillance Capsule Withdrawal Schedule for License Renewal dated May 14, 2015, ML15197A176). C. Revise Reactor Vessel Surveillance Program procedures to withdraw and test a standby capsule to cover the peak fluence expected at the end of the PEO.	B.1.35
29	Implement the **Selective Leaching Program** as described in UFSAR 13.9.1, Appendix A, Section A.1.37.	B.1.37
30	Revise **Steam Generator Integrity Program** procedures to ensure that corrosion resistant materials are used for replacement steam generator tube plugs.	B.1.39

No.	COMMITMENT	LRA SECTION / AUDIT ITEM
31	A. Revise **Structures Monitoring Program** (SMP) procedures to include the following in-scope structures: • Carbon dioxide building • Condensate storage tanks' (CSTs) foundations and pipe trench • East steam valve room Units 1 & 2 • Essential raw cooling water (ERCW) pumping station • High pressure fire protection (HPFP) pump house and water storage tanks' foundations • Radiation monitoring station (or particulate iodine and noble gas station) Units 1 & 2 • Service building • Skimmer wall (Cell No. 12) • Transformer and switchyard support structures and foundations **B**. Revise SMP procedures to specify the following list of in-scope structures are included in the RG 1.127, Inspection of Water-Control Structures Associated with Nuclear Power Plants Program (Section B.1.36): • Condenser cooling water (CCW) pumping station (also known as intake pumping station) and retaining walls • CCW pumping station intake channel • ERCW discharge box • ERCW protective dike • ERCW pumping station and access cells • Skimmer wall, skimmer wall Dike A and underwater dam **C**. Revise SMP procedures to include the following in-scope structural components and commodities: • Anchor bolts • Anchorage/embedments (e.g., plates, channels, unistrut, angles, other structural shapes) • Beams, columns and base plates (steel) • Beams, columns, floor slabs and interior walls (concrete) • Beams, columns, floor slabs and interior walls (reactor cavity and primary shield walls; pressurizer and reactor coolant pump compartments; refueling canal, steam generator compartments; crane wall and missile shield slabs and barriers) • Building concrete at locations of expansion and grouted anchors; grout pads for support base plates • Cable tray • Cable tunnel • Canal gate bulkhead • Compressible joints and seals • Concrete cover for the rock walls of approach channel • Concrete shield blocks • Conduit • Control rod drive missile shield • Control room ceiling support system • Curbs	B.1.40

No.	COMMITMENT	LRA SECTION / AUDIT ITEM
(31)	• Discharge box and foundation • Doors (including air locks and bulkhead doors) • Duct banks • Earthen embankment • Equipment pads/foundations • Explosion bolts (E. G. Smith aluminum bolts) • Exterior above and below grade; foundation (concrete) • Exterior concrete slabs (missile barrier) and concrete caps • Exterior walls: above and below grade (concrete) • Foundations: building, electrical components, switchyard, transformers, circuit breakers, tanks, etc. • Ice baskets • Ice baskets lattice support frames • Ice condenser support floor (concrete) • Insulation (fiberglass, calcium silicate) • Intermediate deck and top deck of ice condenser • Kick plates and curbs (steel - inside steel containment vessel) • Lower inlet doors (inside steel containment vessel) • Lower support structure structural steel: beams, columns, plates (inside steel containment vessel) • Manholes and handholes • Manways, hatches, manhole covers, and hatch covers (concrete) • Manways, hatches, manhole covers, and hatch covers (steel) • Masonry walls • Metal siding • Miscellaneous steel (decking, grating, handrails, ladders, platforms, enclosure plates, stairs, vents and louvers, framing steel, etc.) • Missile barriers/shields (concrete) • Missile barriers/shields (steel) • Monorails • Penetration seals • Penetration seals (steel end caps) • Penetration sleeves (mechanical and electrical not penetrating primary containment boundary) • Personnel access doors, equipment access floor hatch and escape hatches • Piles • Pipe tunnel • Precast bulkheads • Pressure relief or blowout panels • Racks, panels, cabinets and enclosures for electrical equipment and instrumentation • Riprap • Rock embankment • Roof or floor decking • Roof membranes • Roof slabs	

No.	COMMITMENT	LRA SECTION / AUDIT ITEM
(31)	• RWST rainwater diversion skirt • RWST storage basin • Seals and gaskets (doors, manways and hatches) • Seismic/expansion joint • Shield building concrete foundation, wall, tension ring beam and dome: interior, exterior above and below grade • Steel liner plate • Steel sheet piles • Structural bolting • Sumps (concrete) • Sump liners (steel) • Sump screens • Support members; welds; bolted connections; support anchorages to building structure (e.g., non-ASME piping and components supports, conduit supports, cable tray supports, HVAC duct supports, instrument tubing supports, tube track supports, pipe whip restraints, jet impingement shields, masonry walls, racks, panels, cabinets and enclosures for electrical equipment and instrumentation) • Support pedestals (concrete) • Transmission, angle and pull-off towers • Trash racks • Trash racks associated structural support framing • Traveling screen casing and associated structural support framing • Trenches (concrete) • Tube track • Turning vanes • Vibration isolators • Portions of the pressurizer relief tanks (feet, shell, and saddles at tank piping penetrations etc.) that provide structural support for the pressurizer safety valve/PORV discharge piping **D**. Revise SMP procedures to include periodic sampling and chemical analysis of ground water chemistry for pH, chlorides, and sulfates on a frequency of at least every five years. **E**. Revise Masonry Wall Program procedures to specify masonry walls located in the following in-scope structures are in the scope of the Masonry Wall Program: • Auxiliary building • Reactor building Units 1 & 2 • Control bay • ERCW pumping station • HPFP pump house • Turbine building **F**. Revise SMP procedures to include the following parameters to be monitored or inspected:	

No.	COMMITMENT	LRA SECTION / AUDIT ITEM
(31)	• Requirements for concrete structures based on ACI 349-3R and ASCE 11 and include monitoring the surface condition for loss of material, loss of bond, increase in porosity and permeability, loss of strength, and reduction in concrete anchor capacity due to local concrete degradation. • Loose or missing nuts for structural bolting. • Monitoring gaps between the structural steel supports and masonry walls that could potentially affect wall qualification. • Monitor the surface condition of insulation (fiberglass, calcium silicate) to identify exposure to moisture that can cause loss of insulation effectiveness. • **G**. Revise SMP procedures to include the following components to be monitored for the associated parameters: • Anchors/fasteners (nuts and bolts) will be monitored for loose or missing nuts and/or bolts, and cracking of concrete around the anchor bolts. • Elastomeric vibration isolators and structural sealants will be monitored for cracking, loss of material, loss of sealing, and change in material properties (e.g., hardening). • [Blank] The NRC Commitment List references CNL-14-221, E2, ML14350A683 dated 12/11/14. **H**. Revise SMP procedures to include the following for detection of aging effects: • Inspection of structural bolting for loose or missing nuts. • Inspection of anchor bolts for loose or missing nuts and/or bolts, and cracking of concrete around the anchor bolts. • Inspection of elastomeric material for cracking, loss of material, loss of sealing, and change in material properties (e.g., hardening), and supplement inspection by feel or touch to detect hardening if the intended function of the elastomeric material is suspect. Include instructions to augment the visual examination of elastomeric material with physical manipulation of at least ten percent of available surface area. • Opportunistic inspections when normally inaccessible areas (e.g., high radiation areas, below grade concrete walls or foundations, buried or submerged structures) become accessible due to required plant activities. Additionally, inspections will be performed of inaccessible areas in environments where observed conditions in accessible areas exposed to the same environment indicate that significant degradation is occurring. • Inspection of submerged structures at least once every five years. Inspections of water control structures should be conducted under the direction of qualified personnel experienced in the investigation, design, construction, and operation of these types of facilities. • Inspections of water control structures shall be performed on an interval not to exceed five years.	

No.	COMMITMENT	LRA SECTION / AUDIT ITEM
(31)	• Perform special inspections of water control structures immediately (within 30 days) following the occurrence of significant natural phenomena, such as large floods, earthquakes, hurricanes, tornadoes, and intense local rainfalls. • Insulation (fiberglass, calcium silicate) will be monitored for loss of material and change in material properties due to potential exposure to moisture that can cause loss of insulation effectiveness. • Revise SMP procedures to clarify that detection of aging effects will include the following. Qualifications of personnel conducting the inspections or testing and evaluation of structures and structural components meet the guidance in Chapter 7 of ACI 349.3R. **I.** Revise SMP procedures to prescribe quantitative acceptance criteria based on the quantitative acceptance criteria of ACI 349.3R and information provided in industry codes, standards, and guidelines including ACI 318, ANSI/ASCE 11 and relevant AISC specifications. Industry and plant-specific operating experience will also be considered in the development of the acceptance criteria. **J.** [Blank] **K**. Revise SMP procedures to include the following acceptance criteria for insulation (calcium silicate and fiberglass) • No moisture or surface irregularities that indicate exposure to moisture. **L**. Revise SMP procedures to include the following preventive actions. Specify protected storage requirements for high-strength fastener components (specifically ASTM A325 and A490 bolting). Storage of these fastener components shall include: 1. Maintaining fastener components in closed containers to protect from dirt and corrosion; 2. Storage of the closed containers in a protected shelter; 3. Removal of fastener components from protected storage only as necessary; and 4. Prompt return of any unused fastener components to protected storage. **M**. RAI B.1.40-4a Response (Turbine Building wall crack): 1. SQN will map and trend the crack in the condenser pit north wall. 2. SQN will test water inleakage samples from the turbine building condenser pit walls and floor slab for minerals and iron content to assess the effect of the water inleakage on the concrete and the reinforcing steel.	

No.	COMMITMENT	LRA SECTION / AUDIT ITEM
(31)	3. SQN will test concrete core samples removed from the turbine building condenser pit north wall with a minimum of one core sample in the area of the crack. The core samples will be tested for compressive strength and modulus of elasticity and subjected to petrographic examination. 4. The results of the tests and SMP inspections will be used to determine further corrective actions, including, but not limited to, more frequent inspections, sampling and analysis of the inleakage water for minerals and iron, and evaluation of the affected area using evaluation criteria and acceptance criteria of ACI 349.3R. [Outcome of the NRC 01/14/14 telecom] 5. Commitment #31.M will be implemented before the PEO for SQN Units 1 and 2. . [ML13296A017, E-1-10 of 25, 10/21/13, for 31.M.1 to 5]	
32	Implement the **Thermal Aging Embrittlement of Cast Austenitic Stainless Steel (CASS)** as described in UFSAR 13.9.1, Appendix A, Section A.1.41. A. B.1.41-4**a**: For those CASS components with delta ferrite content > 25%, additional analysis will be performed using plant-specific materials data and best available fracture toughness curves. (B.1.41-4a, ML13225A387, E-1 – 19 of 25) B. B.1.41-4**b**: For CASS materials with estimated delta ferrite > 20% that have been determined susceptible to thermal aging, a flaw tolerance analysis may be necessary. If a flaw tolerance analysis will be required for the susceptible CASS components, the SQN-specific flaw tolerance method will be submitted to the NRC for review and approval at least **two years** prior to the PEO; unless ASME has approved the flaw tolerance analysis methodology that SQN will use. [ML13357A722, E-1 – 1 of 43, 12/16/13]	B.1.41

No.	COMMITMENT	LRA SECTION / AUDIT ITEM
33	A. Revise **Water Chemistry Control - Closed Treated Water Systems Program** procedures to provide a corrosion inhibitor for the following chilled water subsystems in accordance with industry guidelines and vendor recommendations: • Auxiliary building cooling • Incore Chiller 1A, 1B, 2A, & 2B • 6.9 kV Shutdown Board Room A & B B. Revise Water Chemistry Control - Closed Treated Water Systems Program procedures to conduct inspections whenever a boundary is opened for the following systems: • Standby diesel generator jacket water subsystem • Component cooling system • Glycol cooling loop system • High pressure fire protection diesel jacket water system Chilled water portion of miscellaneous HVAC systems (i.e., auxiliary building, Incore Chiller 1A, 1B, 2A, & 2B, and 6.9 kV Shutdown Board Room A & B) C. Revise Water Chemistry Control-Closed Treated Water Systems Program procedures to state these inspections will be conducted in accordance with applicable ASME Code requirements, industry standards, or other plant-specific inspection and personnel qualification procedures that are capable of detecting corrosion or cracking. D. Revise Water Chemistry Control - Closed Treated Water Systems Program procedures to perform sampling and analysis of the glycol cooling system per industry standards and in no case greater than quarterly unless justified with an additional analysis. E. Revise Water Chemistry Control - Closed Treated Water Systems Program procedures to inspect a representative sample of piping and components at a frequency of once every ten years for the following systems: • Standby diesel generator jacket water subsystem • Component cooling system • Glycol cooling loop system • High pressure fire protection diesel jacket water system • Chilled water portion of miscellaneous HVAC systems (i.e., auxiliary building, Incore Chiller 1A, 1B, 2A, & 2B, and 6.9 kV Shutdown Board Room A & B) F. Components inspected will be those with the highest likelihood of corrosion or cracking. A representative sample is 20% of the population (defined as components having the same material, environment, and aging effect combination) with a maximum of 25 components. These inspections will be in accordance with applicable ASME Code requirements, industry standards, or other plant-specific inspection and personnel qualification procedures that ensure the capability of detecting corrosion or cracking.	B.1.42

No.	COMMITMENT	LRA SECTION / AUDIT ITEM
34	Revise **Containment Leak Rate Program** procedures to require venting the SCV bottom liner plate weld leak test channels to the containment atmosphere prior to the CILRT and resealing the vent path after the CILRT to prevent moisture intrusion during plant operation.	B.1.7
35	A. From **RAI B.1.6-1** Response: Modify the configuration of the SQN Unit 1 test connection access boxes to prevent moisture intrusion to the leak test channels. Prior to installing this modification, TVA will perform remote visual examinations inside the leak test channels by inserting a borescope video probe through the test connection tubing. B. From B.1.6-**1b** Response: To monitor the condition of the access boxes and associated materials, develop and implement an instruction/procedure to perform visual examinations of all accessible surfaces, including the access box surfaces, cover plate, welds, and gasket sealing surfaces of the access boxes on each unit every other refueling outage with the gasketed access box lid removed. C. From B.1.6-**2b** Response: develop and implement an instruction/procedure to continue volumetric examinations where the SCV domes were cut at the frequency of once every five years until the coatings are reinstalled at these locations.	B.1.6

No.	COMMITMENT	LRA SECTION / AUDIT ITEM
36	A. Revise **Inservice Inspection Program** procedures to include a supplemental inspection to monitor cracking of Class 1 CASS piping components that do not meet the materials selection criteria of NUREG-0313, Revision 2, with regard to ferrite and carbon content when an inspection technique has been qualified by ASME or EPRI. If an inspection technique has not been qualified by ASME or EPRI prior to the commitment due date, revise program procedures to continue monitoring the development of a qualified inspection technique. Once an ASME or EPRI inspection technique is qualified, revise Inservice Inspection Program procedures to perform the supplemental inspections. Inspections will be conducted on a sampling basis. The extent of sampling will be based on the established method of inspection and industry operating experience and practices when the program is implemented, and will include components determined to be limiting from the standpoint of applied stress, operating time and environmental considerations. (RAI 3.1.2.2.6.2-1) B. Revise the Inservice Inspection Program procedures to perform an augmented visual inspection of the Unit 1 and Unit 2 CRDM thermal sleeves and a wall thickness measurement of the six thermal sleeves exhibiting the greatest amount of wear. The results of the augmented inspection should be used to project if there is sufficient wall thickness for the PEO, or until the next inspection. (RAI B.1.23-2d) C. Evaluate industry operating experience related to CRDM housing penetration wear and initiatives to measure CRDM housing penetration wear and resulting wall thickness. Upon successful demonstration of a wear depth measurement process, SQN will revise Inservice Inspection Program procedures to use the demonstrated process at accessible locations to measure depth of wear on the CRDM housing penetration wall associated with contact with the CRDM thermal sleeve centering pads. (RAI B.1.23-2c; Cnl-14-105, Enc 1, A & B.1.16, Inservice Inspection Program, rev 17) D. Revise Inservice Inspection Program procedure to perform an examination of the accessible CRDM housing penetrations to determine the amount of wear in the area of the thermal sleeve centering pads for Units 1 and 2. The accessible locations consist of the centermost CRDM housing penetrations 1 through 5 on Unit 1 and penetrations 2 through 5 on Unit 2. (RAI B.1.23-2c)	B.1.16

No.	COMMITMENT	LRA SECTION / AUDIT ITEM
(36)	E. Revise Inservice Inspection Program procedure to estimate the wall thickness of the accessible CRDM housing penetration wear in the area of the thermal sleeve centering tabs at the end of the next RVH inspection interval and compare the projected wall thickness to the thickness used in Sequoyah design basis analyses to demonstrate validity of the analyses. (RAI B.1.23-2c; Cnl-14-105, Enc 1, A & B.1.16, Inservice Inspection Program, rev 17) F. Revise Inservice Inspection Program procedure to monitor the wear of the accessible CRDM housing penetrations in weld examination volume. (RAI B.1.23-2c) G. TVA ASME Section XI Program procedure which defines the Class 1 components subject to examination will be revised to specifically require a visual examination method VT-3 of the clevis bolts, dowel pins and tack welds as well as the six core support pads. [ML14063A542, E-1 p4, B.1.34-8a] H. Revise SQN's Category B-N-3 inspection procedure to reference the September 22, 2014, NRC RAI B.1.34-9c and the SQN's response (ML14254A204 and CNL-14-181) to identify that the inspection of the accessible regions the upper core plate lower surface (core support structure components, VT-3 inspection below the upper core plate to determine the general mechanical and structural condition of components) as a required License Renewal Inspection during the PEO. (CNL-14-181)	

No.	COMMITMENT	LRA SECTION / AUDIT ITEM
37	TVA will implement the **Operating Experience** for the **AMPs** in accordance with the TVA response to the RAI B.0.4-1 on 07/29/13, ML13213A027; and 10/17/13 letter, RAIs B.0.4-1a and A.1-1a. A. Revise OE Program Procedure to include current and future revisions to NUREG-1801, "Generic Aging Lessons Learned (GALL) Report," as a source of industry OE, and unanticipated age-related degradation or impacts to aging management activities as a screening attribute. B. Revise the Corrective Action Procedure (CAP) Procedure to provide a screening process of corrective action documents for aging management items, the assignment of aging corrective actions to appropriate AMP owners, and consideration of the aging management trend code. C. Revise AMP procedures as needed to provide for review and evaluation by AMP owners of data from inspections, tests, analyses or AMP OEs. [ML14063A542, E-1 p3] D. Revise the OE Program Procedure to provide guidance for reporting plant-specific OE on unanticipated age-related degradation or impact to aging management activities to the TVA fleet and/or INPO. E. Revise the OE, CAP, Initial and Continuing Engineering Support Personnel Training to address age-related topics, the unanticipated degradation or impacts to the aging management activities; including periodic refresher/update training and provisions to accommodate the turnover of plant personnel, and recent AMP-related OE from INPO, the NRC, Scientech, and nuclear industry-initiated guidance documents and standards." F. A comprehensive and holistic AMP training topic list will be developed before the date the SQN renewed operating license is scheduled to be issued. G. [Blank], Reference ML14350A683 dated12/11/14. Once Commitment 37 is fully completed, Commitment 37 can be deleted from this list or the UFSAR.	B.0.4

No.	COMMITMENT	A SECTION / AUDIT ITEM
38	A. Implement the **Service Water Integrity Program** (SWIP) as described in UFSAR 13.9.1, Appendix A, Section A.1.38. [3.0.3-1, Requests 3, ML13312A005.E-1 - 11 of 51, 11/4/13, for 38.A to F] B. Parameters Monitored/Inspected: Revise SWIP procedures to monitor the condition of coated surfaces in the heat exchangers credited in the response to NRC Generic Letter (GL) 89-13 response. C. Detection of aging Effect: Revise the SWIP procedures to perform periodic visual inspections to manage loss of coating integrity due to cracking, debonding, delamination, peeling, flaking, and blistering in heat exchangers credited in the NRC Generic Letter (GL) 89-13 response. D. Acceptance Criteria: Revise the SWIP procedures to include the following coating integrity acceptance criteria: (1) peeling and delamination are not permitted, (2) cracking is not permitted if accompanied by delamination or loss of adhesion, and (3) blisters are limited to intact blisters that are completely surrounded by sound coating bonded to the surface. E. Monitoring and Trending: Revise SWIP procedures to ensure an individual knowledgeable and experienced in nuclear coatings work will prepare a coating report that includes a list of locations identified with coating deterioration including, where possible, photographs indexed to inspection location, and a prioritization of the repair areas into areas that must be repaired before returning the system to service and areas where coating repair can be postponed to the next inspection. F. Qualification: Revise SWIP procedures to ensure coating inspections are performed by individuals certified to ANSI N45.2.6, "Qualifications of Inspection, Examination, and Testing Personnel for Nuclear Power Plants," and that subsequent evaluation of inspection findings is conducted by a nuclear coatings subject matter expert qualified in accordance with ASTM D 7108-05, "Standard Guide for Establishing Qualifications for a Nuclear Coatings Specialist."	B.1.38

No.	COMMITMENT	LRA SECTION / AUDIT ITEM
(38)	G. Before the PEO, revise Service Water Integrity Program procedures to (1) Monitor the existence of fouling or clogging in ERCW stagnant/dead leg piping. This enhancement is applicable to ERCW flow-paths that fulfill a safety-related function. (2) Periodically place normally ERCW stagnant/dead legs in service for the purpose of flushing. Alternatively, periodically flush the normally stagnant/dead leg by temporarily/permanently installing a flushing valve (without placing the line in service). (3) In lieu of flushing, perform periodic radiograph, demonstrated ultrasonic or visual inspections of ERCW stagnant /dead leg piping are acceptable to confirm the absence of fouling/clogging, and (4) When ERCW clogging/fouling of stagnant/dead leg piping is identified, enter findings into the corrective action program and perform an evaluation of the impact of ERCW design functions. (Cnl-14-105, Enc 1, A&B.1.38 Service Water Integrity, rev 17)	
39	Implement the **Boric Acid Corrosion Program** as described in UFSAR 13.9.1, Appendix A, Section A.1.3.	B.1.3
40	Implement the **Environmental Qualification (EQ) Of Electric Components Program** as described in . UFSAR 13.9.1, Appendix A, Section A.1.9	B.1.9
41	Implement the **Masonry Wall Program** as described in UFSAR 13.9.1, Appendix A, Section A.1.20.	B.1.20
42	Implement the **Nickel Alloy Inspection Program** as described in UFSAR 13.9.1, Appendix A, Section A.1.23.	B.1.23
43	Implement the **Water Chemistry Control – Primary And Secondary Program** as described in UFSAR 13.9.1, Appendix A, Section A.1.43.	B.1.43
44	Implement the **RG 1.127, Inspection Of Water-Control Structures Associated With Nuclear Power Plants Program** as described in UFSAR 13.9.1, Appendix A, Section A.1.36.	B.1.36
45	Implement the **161-kV Oil-Filled Cable Program** as described in UFSAR 13.9.1, Appendix A, Section A.1.44.	N/A

TABLE OF CONTENTS

Section	Title	Page
14.0	INITIAL TESTS AND OPERATIONS	
14.1	TEST PROGRAM	14.1-1
14.1.1	ADMINISTRATIVE PROCEDURES (TESTING)	14.1-3
14.1.1.1	Preoperational Test Program	14.1-3
14.1.1.2	Startup Test Program	14.1-5
14.1.2	ADMINISTRATIVE PROCEDURES (MODIFICATIONS)	14.1-7
14.1.3	TEST OBJECTIVES AND PROCEDURES	14.1-7
14.1.3.1	Preoperational Test Program	14.1-7
14.1.3.2	Startup Test Program	14.1-8
14.1.4	FUEL LOADING AND INITIAL OPERATION	14.1-8
14.1.4.1	Fuel Loading	14.1-8
14.1.4.2	Postloading Tests	14.1-10
14.1.4.3	Low Power Testing	14.1-11
14.1.4.4	Power Level Escalation	14.1-12
14.1.5	ADMINISTRATIVE PROCEDURES (SYSTEM OPERATION)	14.1-12
14.1.6	SPECIAL TEST PROGRAM	14.1-13
14.2	AUGMENTATION OF PLANT STAFF FOR INITIAL TESTS AND OPERATIONS (HISTORICAL)	14.2-1
14.2.1	ORGANIZATIONAL FUNCTIONS, RESPONSIBILITIES, AND AUTHORITIES	14.2-1
14.2.1.1	Augmenting Organizations	14.2-1
14.2.1.2	Assisting Organizations	14.2-2
14.2.2	INTERRELATIONSHIPS AND INTERFACES	14.2-3
14.2.3	PERSONNEL FUNCTIONS, RESPONSIBILITIES, AND AUTHORITIES	14.2-3
14.2.4	PERSONNEL QUALIFICATIONS	14.2-3

LIST OF TABLES

Number	Title
14.1-1	List of Preoperational Tests
14.1-2	List of Startup Tests - Unit 1
14.1-3	List of Startup Tests - Unit 2

LIST OF FIGURES

Number	Title
14.1-1	Organization of Initial Testing Program
14.1-2	Preoperational Tests Sequence
14.1-3	Startup Test Sequence - Unit 1
14.1-4	Startup Test Sequence - Unit 2
14.2.2-1	Operating Staff Augmentation During Preoperational Test Program
14.2.2-2	Operating Staff Augmentation During Startup Test Program

14.0 INITIAL TESTS AND OPERATIONS

Chapter 14 describes the test program for initial startup and is provided here for historical purposes. Organizational names and references to other sections of this FSAR are retained to historically reflect those at the time the initial test and operations were performed.

14.1 TEST PROGRAM

This chapter describes the overall startup testing program for the Sequoyah Nuclear Plant. The program, as shown in Figure 14.1-1, is divided into ten parts which extend from the point at which plant construction has progressed to the extent that individual components and systems may be operated and tested through the plant acceptance test at rated power. Figure 14.1-1 also illustrates the grouping of the various test program parts into categories referred to as construction tests, preoperational tests, and startup tests. As subsequently used in this chapter, these categories are defined as follows:

Construction Tests--The adequacy of installation and preliminary operation of systems and components is verified by a construction test program consisting of various inspections and electrical/mechanical tests performed in accordance with written procedures and instructions. This test program is normally completed before the preoperational testing phase and encompasses Parts 1, 2, 3, and 4 of the initial test program as shown on Figure 14.1-1 and as described below:

1. Installed Equipment Inspection Program--Installed equipment is inspected for nameplate data, correct location and orientation, proper materials application, completeness of installation, and possible installation damage. Installation of interconnecting piping and wiring is verified to comply with design requirements. Deviations from applicable design specifications, codes, or standards are detected and corrected. The conduct and documentation of installation inspection activities are prescribed by approved construction procedures.

2. Cleaning and Flushing Program--Installed equipment and systems are cleaned such that operational cleanliness, process chemistry, and flow requirements may be reliably achieved during subsequent startup operations. Detailed written procedures are developed and followed for the cleaning and flushing of major and/or critical systems to ensure that specified cleanliness levels are achieved and maintained. Documentation of results is in accordance with the requirements of the Construction Quality Assurance Program.

3. Integrity Test Program--Field-installed equipment, components, interconnecting piping, and wiring are subjected to various integrity tests to verify conformance with applicable code requirements and to verify adequacy of installation. A comprehensive program of written instructions is utilized to ensure that appropriate tests are defined and performed. These instructions also include precautions to ensure that damage does not result from exceeding specified limitations of the installed equipment.

4. Equipment Checkout, Initial Operation, and Adjustment--An initial operation test program has been developed to include every component or subsystem in the plant. The general objectives of this testing phase are to ensure readiness for operation, to define the operational steps in preparing and actually energizing the equipment for the first time, and to describe and document operating data, subsequent operational adjustment calibration, and general adjustments of controls and supporting apparatus.

The formality and degree of this phase of the construction test program depends on the particular component or subsystem to be tested and the amount and type of data required. For those systems and components which are later subject to a formal preoperational test, all construction tests will be conducted in accordance with detailed, written instructions which define the specific test objectives and provide for the required documentation. In such instances, satisfactory completion of the construction testing is a necessary prerequisite to the conduct of preoperational testing described below:

The construction testing program as defined above is implemented, conducted, and documented by the Sequoyah site construction organization. The construction test documentation becomes a part of the permanent plant records.

Preoperational Tests--Refers to those tests included in Table 14.1-1.

Such tests include all system functional testing which verifies insofar as possible that safety-related systems and equipment perform as described in the FSAR.

Tests in this category normally can be completed before core loading. However, the nature of certain tests require that portions of the test be delayed until after fuel loading.

Startup Tests--Refers to those tests included in Table 14.1-2 (unit 1) and Table 14.1-3 (unit 2).

Such tests include the initial core loading, low power physics testing to verify core design parameters, and subsequent power ascension tests through the plant acceptance test at rated power.

Detailed test instructions are prepared for the conduct of all testing designated as either preoperational or startup tests as defined above. A listing and brief description of the individual tests in each of these categories is presented in Tables 14.1-1, 14.1-2, and 14.1-3 respectively. The sequence of testing for each category is shown in Figures 14.1-2, 14.1-3, and 14.1-4 respectively.

The organization of the material presented in this chapter is similar to that outlined in the following documents:

"Guide for the Planning of Preoperational Testing Programs," USAEC, December 7, 197O

"Guide for the Planning of Initial Startup Programs," USAEC, December 7, 197O (revised)

"Standard Format and Content of Safety Analysis Reports for Nuclear Power Plants," Chapter 14, USAEC, October l972, (Revision 1).

Paragraphs 14.1.1.1 and 14.1.1.2 present a detailed description of the preoperational and startup portions of the test program respectively. The suggested discussions of organizational responsibilities and qualifications of personnel participating in the test program are not included in those descriptions, but are presented in Section 14.2 along with a discussion of planned augmentation of the normal plant staff during the testing program.

14.1.1 Administrative Procedures (Testing)

14.1.1.1 Preoperational Test Program

The preoperational testing program ensures that equipment and systems important to safety are performing in accordance with design criteria before the initial core loading. As the installation of individual components and systems is completed, they are tested and evaluated according to pre-determined and approved written instructions. Analyses of test results are made to verify that systems and components are performing satisfactorily and, if not, to provide a basis for recommended corrective action.

The program includes tests, adjustments, calibrations, and systems operations necessary to assure that initial fuel loading, initial criticality, and subsequent power operation can be safely undertaken.

Whenever practicable, these tests are performed under the same conditions as experienced under subsequent station operations. During system tests for which unit parameters are not available and cannot be simulated due to existing plant conditions, the systems are operationally tested as far as practicable without these parameters. The remainder of the tests are performed under plant conditions when the parameters are available. Abnormal unit conditions are simulated during testing when required and when such conditions are practicable and do not endanger personnel or equipment, or contaminate systems whose cleanliness has been established.

In general, preoperational testing is completed prior to core loading. As individual systems are completed, preoperational tests are performed to verify as near as possible, the performance of the system under actual operating conditions. Where required, simulated signals or inputs are used to verify the full operating range of the system and to calibrate and align the systems and instruments at these conditions. Later systems that are used during normal operation are verified and calibrated under actual operating conditions.

Systems that are not used during normal plant operation, but must be in a state of readiness to perform safety functions, are checked under all modes and test conditions prior to plant startup. Examples of these systems are the Reactor Trip System and Engineered Safety Features System logic, operation checks, and setpoint verifications.

Testing performed during the preoperational test program is outlined in Table 14.1-1 and shown in sequence of performance in Figure 14.1-2. In general, all preoperational testing was completed before fuel loading. In some cases, certain preoperational tests were not completed until after core loading. These include such tests as the complete rod control system, rod position indication, and complete incore movable detector system. These tests are identified in Table 14.1-1. Prior to the performance of hot testing, following core loading, prerequisite cold testing is performed. Examples of these tests are the cold rod drop time measurement tests.

The training program to prepare plant supervisors and operating personnel for the initial testing program and subsequent plant operation is described in Section 13.2.

14.1.1.1.1 Preparation of Test Instructions, Conduct of Tests, and Evaluation of Results

Within the Tennessee Valley Authority, the Division of Nuclear Power (NUC PR) has responsibility for the overall preoperational test program administration. As described in Section

13.1, the Nuclear Production Manager is responsible for coordination of all NUC PR activities affecting operation, engineering, and maintenance in TVA's nuclear power plants. In this capacity, he provides overall guidance to the plant superintendent in the conduct of the test program.

A system of planned and periodic program management audits is provided by the Office of Power quality assurance organization. Additional review of the overall testing and startup programs is provided by the Nuclear Safety Review Board.

The plant superintendent is the onsite NUC PR representative responsible for the overall conduct and coordination of the preoperational test program. He directs the onsite implementation of the program through the preoperational test section supervisor who acts as the test program coordinator. Members of this section are designated as "test director" for specific tests and, in this capacity, are responsible for preparation of the detailed test instructions, conduct of the tests, evaluation of test results, and final documentation of results for each preoperational test so assigned. The qualifications of these personnel are discussed in Section 14.2.

Scoping documents which describe the objectives and acceptance criteria for each test are utilized as the basis for the preparation of detailed test instructions. The scoping documents for tests involving systems and components within the TVA scope of supply are prepared by the Division of Engineering Design (EN DES). Tests on equipment within the Westinghouse scope are similarly described in documentation provided by Westinghouse, which is reviewed and revised by EN DES and issued as scoping documents.

Detailed test instructions in draft form are prepared by the designated test directors. Each instruction is written in sufficient detail to ensure that the test demonstrates that the system and components perform in accordance with the requirements contained in applicable design documents; that specified acceptance criteria are satisfied; that the system operates in all required modes; and that deficiencies are identified, evaluated, and corrected. Normal station operating instructions are utilized in the test instructions where possible to provide a thorough check of the operating instructions.

The test instructions, in draft form, are reviewed by the NUC PR plant staff, EN DES, the Division of Construction (CONST), in some instances by the Division of Occupational Health and Safety (OC H&S), and by Westinghouse. Upon completion of the review phase, a final draft of the test instruction is submitted to the Plant Operations Review Committee (PORC). The organization of the PORC is described in Section 6.0 of plant technical specifications. The PORC recommends approval or disapproval of the instruction to the plant superintendent. Subsequent major revisions to test instructions are numbered sequentially and undergo the same review and approval as the original instruction. Final drafts of all test instructions were completed approximately six months before the initial core loading.

The test directors follow construction progress on those systems for which they have been assigned responsibility and, when satisfied that all test prerequisites have been completed, recommend conduct of the test. Authorization to conduct a test is given jointly by the TVA construction project manager and the plant superintendent.

Tests are conducted under the direction of the designated test director assisted by test representatives from EN DES, CONST, and Westinghouse as necessary. During performance of

the test, minor changes to the test instruction not involving safety related aspects and not interfering with test objectives or invalidating test results may be made at the direction of the test director. Such changes are documented and reported to the test program coordinator. As previously described, major or significant changes to a test instruction are subject to the same review and approval process as the original instruction.

At the completion of each test, the test director coordinates a field evaluation of the test results. In the event that test results do not satisfy applicable acceptance criteria and the deficiency involves system design, EN DES evaluates the deficiency and specifies the appropriate corrective actions. In the event that test results do not satisfy applicable acceptance criteria and the deficiency involves equipment performance because of improper installation or pretest checkout and does not involve system design, CONST evaluates the deficiency and initiates the appropriate corrective measures.

14.1.1.1.2 Documentation

When it is demonstrated that test results meet the applicable acceptance criteria for a specific test, the test director initiates a data package for final approval. The data package contains the test instruction, a record of all changes to the basic instruction, all test data sheets, a chronological log of the conduct of the test, and a final test summary document.

After appropriate review and final approval by the plant superintendent, the data package is filed for future reference and becomes part of the permanent plant records.

14.1.1.2 Startup Test Program

The startup test program ensures that the plant actually performs in accordance with design requirements.

The program includes the initial core loading and the startup and power ascension tests which take the unit from initial criticality through the 100 percent power condition acceptance test.

The startup test program incorporates several operational and testing phases as follows:

1. Initial Core Loading

2. Postloading Tests

3. Low Power Testing

4. Power Escalation Tests

A general discussion of plant conditions and the activities occurring during each of these testing phases is presented in Subsection 14.1.4. A specific listing of individual tests performed during the startup program is shown in Tables 14.1-2 (unit 1) and 14.1-3 (unit 2) and shown in sequence of performance in Figures 14.1-3 (unit 1) and 14.1-4 (unit 2).

14.1.1.2.1 Preparation of Test Instructions, Conduct of Tests, and Evaluation of Results

The Division of Nuclear Power (NUC PR) is responsible for the overall administration of the startup test program. Within the division, the Nuclear Production Manager is responsible for

coordinating all activities affecting operation, maintenance, and engineering in nuclear plants. In this capacity, he provides overall administrative guidance in the conduct of the startup test program.

The Nuclear Quality Audit and Evaluation Staff provides overall test program review through formal audits of the operational quality assurance program. Technical guidance during conduct of testing is provided by Westinghouse Electric Corporation in their capacity as nuclear steam supply system contractor. Additional assistance from within TVA is provided by the Division of Engineering Design (EN DES), the Division of Construction (CONST), and the Department of Occupational Health and Safety (OC H&S) as necessary. Direct plant assistance is also provided to the operating staff from within NUC PR by the Electrical and Instrument and Controls Branch, Mechanical Branch, Reactor Engineering Branch, and other TVA nuclear plants as described in Section 14.2.

The plant superintendent directs the onsite implementation of the program through the plant engineering supervisor who acts as the startup test program coordinator. The engineering supervisor is responsible for the preparation of detailed test instructions, conduct of the tests, evaluation of test results, documentation of results, and final disposition of test records.

Detailed test instructions in draft form are prepared by NUC PR engineers based on guideline-type documentation provided by Westinghouse. Each test instruction is written in sufficient detail to ensure that the specific objectives of the test are identified and that all testing steps necessary to accomplish the objectives are stated; that acceptance criteria are specified; and that any deficiencies are identified, evaluated, and corrected.

Review of each draft instruction is performed, within NUC PR, by the plant staff and the Nuclear Production Manager. Additional review of the draft instructions is provided on a selective basis, by the Division of Engineering Design. The test program coordinator ensures that all comments from reviewers are resolved and then submits a final draft of the test instruction to the Plant Operations Review Committee (PORC). The PORC reviews the individual instructions and recommends approval only after it is satisfied that the safety of plant personnel and equipment are not jeopardized during conduct of the test. Final approval of test instructions for use is given by the plant superintendent.

Tests are conducted under the technical direction of the test program coordinator with assistance from TVA support organizations and from Westinghouse as necessary. Tests that result or may result in reactivity changes are performed only with the knowledge and consent of an operator or senior operator licensed pursuant to 10 CFR 55. During testing, field changes may be made to the test instruction as prescribed by plant administrative procedures. Field changes are limited to those changes which do not change the intent of the test. Major revisions to an instruction involving either safety-related aspects or changes in the intent of the instruction are subject to the same review and approval process as the original instruction.

The startup test program is structured in such a manner as to establish acceptance criteria at each test plateau which must be met before proceeding to the next test plateau. For this purpose, test plateaus are fuel loading, initial criticality, low power physics testing, and testing performed at 30, 50, 75, 90, and 100 percent power. If deficiencies in plant performance are

noted during testing, the PORC reviews and resolves the deficiencies as described in Subsection 14.1.2. Copies of all test data and analyses are distributed to Westinghouse and reviewed within TVA by NUC PR and, on a selective basis, by EN DES.

14.1.1.2.2 Documentation

Upon final approval and acceptance of test results, the original records of all test data, a chronological log of the conduct of the test, and a final test summary are filed for future reference and become part of the permanent plant records.

14.1.2 Administrative Procedures (Modifications)

Deficiencies in either a critical system's design or performance, the methods of conducting a test, or station operating instructions which become apparent as a result of the preoperational test program are documented and handled as described below, depending on the particular type of deficiency which is involved. Similarly, deficiencies which become apparent as a result of the startup test program are documented and submitted to the Plant Operations Review Committee (PORC) which reviews each such deficiency report and recommends appropriate corrective actions to the plant superintendent.

If the deficiency is in either the test instruction or an operating instruction utilized during testing, the applicable section of the instruction is revised and appropriately reviewed. All such revisions which affect testing are documented, reviewed by the PORC, and approved by the plant superintendent before plant use. Except that minor changes to testing instructions may be made as described in subparagraphs 14.1.1.1 and 14.1.1.2.1.

If the deficiency is in equipment performance because of improper installation or checkout and does not involve a change in design, the site construction organization corrects the deficiency. The corrective action is documented and testing resumed.

In the event that modifications to system hardware are necessary to meet the test objectives or improve system performance, the Division of Engineering Design (EN DES) specifies the appropriate corrective actions to be taken. Such modifications are subject to the same design review and construction quality assurance as the original system design described in the TVA Nuclear Quality Assurance Plan. The test program coordinator initiates any changes necessary in the test instruction and retests affected systems as necessary.

Administrative procedures prescribe the documentation required for all temporary changes in plant design made to facilitate conduct of the tests. Such controls ensure that temporary modifications are restored to the normal operating condition upon completion of the testing program.

14.1.3 Test Objectives and Procedures

A brief discussion of the preoperational and startup test programs is presented below:

14.1.3.1 Preoperational Test Program

A listing of planned preoperational tests is shown in Table 14.1-1. The listing includes the title of each test to be performed; a general listing of test prerequisites such as plant conditions,

etc.; and a brief discussion of the test objectives with an overall summary of how the test is conducted to achieve these objectives. The tests described in Table 14.1-1 are generally applicable to the test program for each reactor unit. However, for those auxiliary support systems which are common to each unit (e.g., essential raw cooling water system, emergency gas treatment system, etc.), the applicable test summary describes only the total system functional testing to be performed and does not specify individually the testing which is performed as part of each reactor unit's test program. Generally, a system such as an auxiliary cooling water system is tested as follows: Major components such as pumps and main header valves are tested and main header flows verified as part of the Unit 1 test program. Verification of branch flows to equipment associated with a specific reactor unit and automatic response of system components to actuation signals originating from a specific reactor unit are included in that unit's test program. Testing of other types of common systems are conducted in a similar manner.

Acceptance standards for specific tests are based on the functional requirements for the applicable component or system as discussed elsewhere in the Final Safety Analysis Report. A detailed listing of the acceptance criteria for each test is contained in the final test instruction to facilitate rapid field evaluation of the test results.

Where special consideration must be given to testing system or component response under specific environmental conditions, it is discussed in the summary of testing included in Table 14.1-1. Whenever practicable, tests are performed under the same conditions as experienced during subsequent plant operations. Abnormal conditions are simulated when required and practicable and when such conditions do not endanger personnel and equipment or contaminate systems whose cleanliness has been established.

The scope of testing includes the analysis of system and component interactions where possible considering plant conditions at the time of testing. This is primarily accomplished during the hot functional testing phase of the program.

14.1.3.2 Startup Test Program

A listing of planned startup tests is shown in Tables 14.1-2 (unit 1) and 14.1-3 (unit 2). The listing includes the title of each test to be performed; a general listing of plant prerequisites such as plant conditions, etc., and a brief discussion of test objectives along with an overall summary of how the test is conducted to achieve these objectives.

Acceptance standards for specific tests are based on the functional requirements for the plant as discussed elsewhere in the Final Safety Analysis Report. Applicable standards against which the nuclear core performance characteristics are evaluated are derived from the nuclear design manual and the kinetic coefficients assumed in the safety analyses.

A brief description of the various phases of the startup test program and of the testing and operational activities associated with each phase is presented in Subsection 14.1.4.

14.1.4 Fuel Loading and Initial Operation

14.1.4.1 Fuel Loading

Fuel loading begins when all prerequisite preoperational testing has been satisfactorily completed. Upon completion of fuel loading, the reactor upper internals and pressure vessel

head are installed and additional mechanical and electrical tests are performed as discussed in preoperational testing. The purpose of this phase of activities is to prepare the system for nuclear operation and to establish that all design requirements necessary for operation are achieved.

The reactor containment structure is completed and the containment integrity established, as discussed in the technical specifications, and maintained during fuel loading.

Fuel handling tools and equipment are checked out and dry runs conducted in the use and operation of equipment.

The reactor vessel and associated components are in a state of readiness to receive fuel. Water level is maintained above the bottom of the nozzles and recirculation maintained to ensure a uniform boron concentration. Boron concentration can be increased via the recirculation system or by addition directly to the open vessel.

The overall process of initial core loading is, in general, directed from the refueling floor of the containment structure. Standard procedures for the control of personnel and the maintenance of containment security are established and implemented prior to fuel loading.

The as-loaded core configuration is specified as part of the core design studies conducted well in advance of station startup and as such is not subject to change at startup. In the event mechanical damage is sustained during core loading operations to a fuel assembly of a type for which no spare is available onsite, an alternate core loading scheme whose characteristics closely approximate those of the initially prescribed pattern will be determined by Westinghouse and TVA.

The core is assembled in the reactor vessel and submerged in reactor grade water containing adequate dissolved boric acid to maintain a calculated core effective multiplication factor of 0.95 or lower. The refueling cavity is dry during initial core loading. Core moderator chemistry conditions (particularly, boron concentration) are prescribed in the core loading instruction document and are verified periodically by chemical analysis of moderator samples taken prior to and during core loading operations.

Core loading instrumentation consists of two permanently installed source range (pulse type) nuclear channels and two temporary incore source range channels plus a third temporary channel which can be used as a spare. The permanent channels when responding are monitored in the main control room by licensed station operators; the temporary channels are installed in the containment structure and are monitored by reactor engineering personnel and licensed station operators. At least one permanent channel is equipped with an audible count rate indicator. Both plant channels have the capability of displaying the neutron flux level on a strip chart recorder. The temporary channels indicate on-rate meters with a minimum of 1 channel recorded on a strip chart recorder. Response checks on each of the above source range channels to a source of neutrons are conducted within eight hours prior to initial loading or resumption of loading if loading is delayed or interrupted for eight hours or more. At all times following installation of the initial nucleus of ten fuel assemblies, a minimum count rate of 1/2 count per second with a signal to noise ratio of greater than two shall be maintained on two of the source range channels.

Fuel assemblies, together with inserted components (control rod assemblies, burnable poison inserts, source spider, or thimble plugging devices) are placed in the reactor vessel one at a time according to a previously established and approved sequence. The core loading documents include detailed tabular check sheets which prescribe and verify the successive movements of each fuel assembly and its specified inserts from its initial position in the storage racks to its final position in the core. Multiple checks are made of component serial numbers and types at successive transfer points to guard against possible inadvertent exchanges or substitutions of components. Fuel assembly status boards are maintained throughout the core loading operation.

An initial nucleus of ten fuel assemblies, the second of which contains an activated neutron source, is the minimum source-fuel nucleus which permits subsequent meaningful inverse count rate monitoring. This initial nucleus is determined by calculation. Previous experience indicates that this nucleus is markedly subcritical ($k_{eff} \leq 0.95$) under the required conditions of loading. Each subsequent fuel addition is accompanied by detailed neutron count rate monitoring to determine that the just loaded fuel assembly does not excessively increase the count rate and that the extrapolated inverse count rate ratio is not decreasing for unexplained reasons. The results of each loading step are evaluated before the next prescribed step is started.

Criteria for safe loading require that loading operations stop immediately if:

1. An unanticipated increase in the neutron count rates by a factor of 2 occurs on all responding nuclear channels during any single loading step after the initial nucleus of 10 fuel assemblies are loaded (excluding anticipated change due to detector and/or source movement).

2. The neutron count rate on any individual nuclear channel increases by a factor of five during any single loading step after the initial nucleus of 10 fuel assemblies are loaded (excluding anticipated changes due to detector and/or source movements).

Alarms in the containment and main control room are coupled to the source range channels with a setpoint at no more than two times the current count rate. This alarm automatically alerts the loading operation personnel of high count rate and requires an immediate stop of all operations until the situation is evaluated. Normally the alarm used for this purpose is the containment evacuation alarm. In the event the evacuation alarm is actuated during core loading and after it has been determined that no hazards to personnel exist, preselected personnel are permitted to reenter the containment vessel to evaluate the cause and determine future action.

Core loading instructions specify the condition of fluid systems to prevent inadvertent dilution of the reactor coolant, specify the movement of fuel to preclude the possibility of mechanical damage, prescribe the conditions under which loading can proceed, designate responsibility and authority and provide for continuous and complete fuel and core component accountability.

14.1.4.2 Postloading Tests

Upon completion of core loading, the reactor upper internals and the pressure vessel head are installed and additional mechanical and electrical tests as discussed in preoperational testing program, are performed prior to initial criticality. The final pressure test is conducted after filling and venting is completed to check the integrity of the vessel head installation.

Mechanical and electrical tests are performed on the control rod drive mechanisms. These tests include a complete operational checkout of the mechanisms and calibration of the individual rod position indication.

Tests are performed on the reactor trip circuits to test manual trip operation. The actual control rod assembly drop times are measured for each control rod assembly. The Reactor Control and Protection Systems are checked with simulated signals to produce a trip signal for the various conditions that require plant trip.

At all times that the control rod drive mechanisms are being tested, the boron concentration in the coolant-moderator is maintained such that criticality cannot be achieved with all control rod assemblies out.

A complete functional electrical and mechanical check is made of the incore nuclear flux mapping system at the operating temperature and pressure. After final precritical tests, nuclear operation of the reactor begins. This final phase of startup and testing includes initial criticality, low power testing, and power level escalation. The purpose of these tests is to establish the operational characteristics of the unit and core, to acquire data for the proper calibration of setpoints, and to ensure that operation is within license requirements. A brief description of the testing is presented in the following sections. Table 14.1-2 (unit 1) and Table 14.1-3 (unit 2) summarize the tests which are performed from initial core loading to rated power and Figure 14.1-3 (unit 1) and 14.1-4 (unit 2) shows the sequence in which these tests are performed.

Initial criticality is established by sequentially withdrawing the shutdown and control groups of control rod assemblies from the core, leaving the last withdrawn control group inserted far enough in the core to provide effective control when criticality is achieved, and then continuously diluting the heavily borated reactor coolant until the criticality is achieved.

Successive stages of control rod assembly group withdrawal and of boron concentration reduction are monitored by observing changes in neutron count rate as indicated by the normal plant source range nuclear instrumentation as functions of group position during rod motion and, subsequently, of reactor coolant boron concentration and primary water addition to the Reactor Coolant System during dilution. Throughout this period, samples of the primary coolant are obtained and analyzed for boron concentration.

Inverse count rate ratio monitoring is used as an indication of the proximity and rate of approach to criticality of the core during control rod assembly group withdrawal and during reactor coolant boron dilution. The rate of approach is reduced as the reactor approaches the point extrapolated for criticality to ensure that effective control is maintained at all times. Written procedures specify the plant conditions, precautions, and specific instructions for the approach to criticality.

14.1.4.3 Low Power Testing

A prescribed program of reactor physics measurements is undertaken to verify that the basic static and kinetic characteristics of the core are as expected and that the values of the kinetic coefficients assumed in the safeguards analysis are indeed conservative.

The measurements are made at low power and primarily at or near operating temperature and pressure. Measurements, to include verification of calculated values of control rod assembly group reactivity worths, of isothermal temperature coefficient under various core conditions, of

differential boron concentration reactivity worth and of critical boron concentrations as functions of control assembly group configuration are made. In addition, measurements of the relative power distributions are made. Concurrent tests are conducted on the instrumentation including the source and intermediate range nuclear channels.

Instructions are prepared to specify the sequence of tests and measurements to be conducted and the conditions under which each is to be performed to ensure both safety of operation and the relevancy and consistency of the results obtained. If significant deviations from design predictions exist, unacceptable behavior is revealed, or apparent anomalies develop, the testing is suspended and the situation reviewed to determine whether a question of safety is involved, prior to resumption of testing.

14.1.4.4 Power Level Escalation

When the operating characteristics of the reactor and unit are verified by the low power testing, a program of power level escalation in successive stages brings the unit to its full rated power level. Both reactor and unit operational characteristics are closely examined at each stage and the conformance with the safeguards analysis verified before escalation to the next programmed level is effected.

Measurements are made to determine the relative power distribution in the core as functions of power level and control assembly group position.

Secondary system heat balances ensure that the indications of power level are consistent and provide bases for calibration of the power range nuclear channels. The ability of the Reactor Coolant System to respond effectively to signals from primary and secondary instrumentation under a variety of conditions encountered in normal operations is verified. At prescribed power levels the dynamic response characteristics of the reactor coolant and steam systems are evaluated. The responses of the systems are measured for design step load changes of + 10 percent, rapid 50 percent load reductions and plant trips.

Adequacy of radiation shielding is verified by gamma and neutron radiation surveys at selected points inside the containment and throughout the station site at various power levels. Periodic sampling is performed to verify the chemical and radio-chemical analysis of the reactor coolant.

Testing performed following core loading and during plant startup is outlined in Tables 14.1-2 (unit 1) and 14.1-3 (unit 2). All precritical tests shall be completed prior to initial criticality and the results evaluated. Prerequisites for performing a test are specified in the individual test instruction. The sequence of testing is outlined in a start-up test sequence, such that required prerequisite testing is completed before performing subsequent testing. Any special test instruments required are specified to be installed, calibrated, and checked in the test instruction that specifies the test equipment. Where these test instruments are not left installed for future use, they are removed from the systems and removal is verified. The sequence of testing following core loading is shown by Figures 14.1-3 (unit 1) and 14.1-4 (unit 2).

14.1.5 Administrative Procedures (System Operation)

Systems operations during the initial testing program are performed by NUC PR plant personnel. As discussed in Section 13.5, instructions for integrated plant operations, systems operation, and equipment operation are prepared in those instances where written instructions are required

to ensure safety and reliability. Whenever possible, the detailed instructions for conduct of a particular test utilize the applicable station operating instruction to demonstrate the station instructions. Those tests which require special operating conditions are accomplished using detailed test instructions which prescribe any off-normal operational sequences required for conduct of the tests.

Revisions to station operating instructions resulting from deficiencies discovered during the testing program are accomplished as described in Subsection 14.1.2.

14.1.6 Special Test Program

This section is included for historical purposes only. It indicates the steps taken to comply with the TMI Task Action Plan statement that "applicants for operating licenses will perform a set of low-power tests to increase the capability of shift crews and ensure training in plant evaluation and off-normal events."

The special low-power test program was conducted at Sequoyah Unit 1 starting July 21, 1980. NRC staff representatives, including the Sequoyah resident inspectors, were present to observe these tests. At least one NRC representative was present during the first run of each of the 10 tests, identified as follows:

1. Natural circulation test

2. Natural circulation test with simulated loss of offsite power

3. Natural circulation test with loss of pressurizer heaters

4. Effect of steam generator secondary side isolation on natural circulation

5. Natural circulation at reduced pressure

6. Cooldown capability of the charging and letdown system

7. Simulated loss of all onsite and offsite A.C. power

8. Establishment of natural circulation from stagnant conditions

9A. Forced circulation cooldown

9B. Boron mixing and cooldown

Test 6, 8, and 9A were each conducted only once. All other tests were repeated on each shift so that each operating crew gained "hands-on" experience for each test. Not repeating tests 6, 8, and 9A was acceptable to the staff because they have little training value.

The Special Test Program will not be conducted at Sequoyah Unit 2. The unit 2 personnel will receive their special test training on the Sequoyah simulator at the Power Operations Training Center.

TABLE 14.1-1 (Sheet 1)

LIST OF PREOPERATIONAL TESTS

Test No.	Title of Test	Test Prerequisites	Test Objectives Summary of Testing and Acceptance Criteria
W-1.1	Pressurizer Relief Tank	The tentative transfer of all the affected equipment from CONST to P PROD has been completed. Installation and required installation inspections, integrity testing, and cleaning and flushing activities of all associated equip-associated equipment have been completed. Electrical power and control air are available to all components requiring Instrumentation and alarms are available for service. The Waste Disposal System is in service and available for processing liquid and gaseous effluents from the Pressurizer Relief Tank (PRT). The Primary Makeup Water Tank is available to provide water to the PRT. The Sampling and Water Quality System is available to vent the PRT. The Reactor Coolant System is to remain depressurized during the test.	The test verifies the appropriate flow rates and the indicating and control capabilities of the PRT services. The vent header valve will be tested for automatic actuation and the valve position indicator lights checked for proper operation. Liquid level and gas pressure alarm setpoints and cooling spray slow rate will be checked. Capabilities of the nitrogen pressure regulators to maintain blanket gas pressure and downstream pressure to the gas analyzer will be demonstrated. Acceptance criteria for the PRT will be that the requirements given in FSAR section 5.5.11 have been satisfied.
W-1.2A	Reactor Coolant System Functional	The prerequisites for this test is the availability of the RCS for functional testing.	The test will address initial operability of RCS components and instrumentation and will be performed prior to initial RCS heatup. The objective is to perform control and logic verification of those portions of the RCS which have not been addressed in other tests. The test will address: A. All manual and automatic logic associated with the reactor coolant pumps, the RCP oil lift pumps, RCS valves (pressurizer relief, pressurizer block, pressurizer spray, and reactor vessel flange

TABLE 14.1-1 (Sheet 2)

LIST OF PREOPERATIONAL TESTS

Test No.	Title of Test	Test Prerequisites	Test Objectives Summary of Testing and Acceptance Criteria
			leakoff valves), and the pressurizer backup and control heater breakers. The test will verify breaker operation, valve travel, unit switch operation, lights at handswitches, alarms, etc.; B. Instrumentation loop checks, of RCS pressure, level, temperature loops, and RCS overpressure mitigating system, and steam generator narrow range level loops using simulated conditions (note that each instrument loop will be tested by inducing test signals downstream of the primary transmitter, varying the signal over the range of the instrument, and verifying that all interlocks, alarms, annunciators, and bistables associated with that loop operate at the proper current; the primary transmitters are not tested here but are addressed in W-1.3; and C. Proper operation of pressurizer heater breaker and RCP breaker protection circuitry and their associated alarms (e.g., overcurrent, undercurrent, undervoltage, under-frequency, etc., as applicable). Acceptable criteria for these tests will be determined from the specific logic and current scaling calculations associated with each component or

TABLE 14.1-1 (Sheet 3)

LIST OF PREOPERATIONAL TESTS

Test No.	Title of Test	Test Prerequisites	Test Objectives Summary of Testing and Acceptance Criteria
			instrument loop. All items must operate in accordance with the design logic from both the main control room and auxiliary (remote) control locations.
W-1.2B	Reactor Coolant System Heatup	The tentative transfer of all the affected equipment from CONST to P PROD has been completed. Installation and required installation inspections, integrity testing, and cleaning and flushing activities of all associated equipment have been completed. Pressurizer relief tank tests have been completed. Reactor Coolant System (RCS) hydrotest has been completed and reactor vessel full flow filters have been installed. Operational systems required are: Waste Disposal Primary Makeup Water, Component Cooling, Essential Raw-cooling Water, Chemical and Volume Control, Sampling, Secondary Plant (to the point receiving and dumping steam), and Auxiliary Feedwater System. The RCS and pressurizer heaters are operable to maintain RCS temperature and pressure within design limitations. The diesel-generator units are operable in a stand-by mode and alternate offsite power is available. Instrumentation and control systems have been calibrated and are operational. The RCS has been filled and vented.	The Reactor Coolant System (RCS) will be heated to normal operating temperature and pressure using RC pump heat. The pressurizer will initially be filled with water (water solid), with system letdown controlled by the Residual Heat Removal (RHR) system to the Chemical and Volume Control System (CVCS). The ability to control RCS pressure during water solid operation will be verified prior to initiating RCS heatup. Control of water chemistry and flow to RC pump seals will be demonstrated. Measurement of RCS piping and component thermal expansion and pump vibration will be taken at 100 F temperature increments during heatup. The pressurizer steam bubble will be formed as soon as practical following completion of solid system pressure control testing and the steam generator levels then lowered to the normal no-load operating level. Operability of the pressurizer heaters and spray valves will be demonstrated. The normal letdown flow path will be demonstrated. Upon establishment of normal letdown flow path and RCS temperature reaching approximately 350°F, the RHR system will be removed from service. At this time, either the steam generator

TABLE 14.1-1 (Sheet 4)

LIST OF PREOPERATIONAL TESTS

Test No.	Title of Test	Test Prerequisites	Test Objectives Summary of Testing and Acceptance Criteria
			atmospheric dump valves or the condenser dump valves will be placed in service to control secondary side pressure. The anti-reverse-rotation device will be checked on each RC pump and all reactor coolant low-flow alarms and trips verified. Acceptance criteria for this test will be that the RCS functions properly during all phases of plant operation.
W-1.3	RCS at Temperature	The tentative transfer of all the affected equipment from CONST to P PROD has been completed. Installation and required installation inspections, integrity testing, and cleaning and flushing activities of all associated equipment have been completed. All systems required to support testing and operation have either been preoperationally tested or cleared under an IOR. Instrumentation has been checked, tested, and calibrated.	Test objective is to perform all of the functional checks on RCS components and instrumentation required during plant operation at design temperature and pressure. Automatic operation of the pressurizer pressure and level control systems and associated instrumentation will be checked. Setpoints and operability will be verified for pressurizer pressure and level actuation signals for both reactor trip and SIS actuation signals and for related annunciation and alarms. Interlocks associated with automatic reset of manual block of SIS actuation signal and with power operated relief valves will be functionally tested. Operation and response time of the pressurizer relief valves and temperature increase in the pressurizer relief tank will be recorded. Operation of the SG atmospheric dump valves and level control system will be demonstrated. Settings of the pressurizer and main steam safety valves will be checked and adjusted and the cross calibration of the incore

TABLE 14.1-1 (Sheet 5)

LIST OF PREOPERATIONAL TESTS

Test No.	Title of Test	Test Prerequisites	Test Objectives Summary of Testing and Acceptance Criteria
			thermocouples and RTD's will be completed. The capability of maintaining the RCS at the hot shutdown condition from the auxiliary control room will be demonstrated. The RCS 240-hour full flow run will be completed. Acceptance criteria for this test shall be that the requirements given in the applicable portions of FSAR sections 7.2 and 7.3 have been satisfied.
W-1.4	RCS Cooldown	The tentative transfer of all the affected equipment from CONST to P PROD has been completed. Installation and required installation inspections, integrity testing, and cleaning and flushing activities of all associated equipment have been completed. Instrumentation has been checked, tested, and calibrated. All primary water storage contains adequate water to accommodate RCS contraction to cooldown. The PRT, its services systems and the RHR System are fully operable. RCS at temperature testing is completed. The prerequisites for W-1.3 are also applicable to this test.	This test verifies the proper operation of all systems and instrumentation required for cooldown of the RCS from the hot standby condition to the depressurized condition of 140°F. At least one reactor coolant pump will be maintained in operation. Temperature drop limitations will be observed. When the RCS pressure is below 450 psig and the temperature below 350°F, the RHR system will be initiated for cooling in addition to steam dump. Steam stop valves are closed when condenser vacuum can no longer be maintained. RHR cooling continues with steam generator wet layout at 210°F until temperature reaches 150°F when the remaining RC pump is stopped. Cooling continues to 140°F and 50 psig, and the system is drained to the refueling level. Tests results will be considered acceptable if a controlled smooth cooldown can be accomplished.
W-1.5	*Pressurizer Spray Verification	The tentative transfer of all the affected equipment from CONST to P PROD has been completed. Installation and	The test demonstrates the capability of the pressurizer heaters and spray. Specifically the test includes:

TABLE 14.1-1 (Sheet 6)

LIST OF PREOPERATIONAL TESTS

Test No.	Title of Test	Test Prerequisites	Test Objectives Summary of Testing and Acceptance Criteria
		required installation inspections, integrity testing, and cleaning and flushing activities have been completed. Preoperational test on the Reactor Coolant System heatup and cooldown have been successfully completed and is in hot standby conditions with no load temperature and pressure. The reactor core has been installed. The primary coolant has been borated to refueling concentration and the reactor coolant pumps are in operation. The pressurizer level is at the no load programmed level and the level controlled is in automatic. The test equipment has been calibrated and is ready for use.	1) To establish the proper pressurizer continuous spray bypass flow rate; 2) To verify the normal pressurizer spray effectiveness, and 3) To verify the pressurizer heater effectiveness. The bypass flow rate is established so that: 1) The spray line temperature is never more than 200°F cooler than pressurizer water, and 2) The line temperature is high enough to prevent actuation of the line low-temperature alarm. The bypass valves are adjusted open with temperature data taken at 10 minute intervals until the minimum bypass flow is determined. The pressurizer spray effectiveness test consists of a transient initiated by full spray to reduce pressurizer pressure to 2000 psig during which data is continuously recorded. The heater effectiveness test is a similar transient with the spray valves manually closed and the heaters fully energized to increase the pressure to 2300 psig. The tolerance on the response times is verified to be within specified limits. Acceptance criteria will be that the requirements given in FSAR section 5.5.10 have been satisfied by the pressurizer spray.

TABLE 14.1-1 (Sheet 7)

LIST OF PREOPERATIONAL TESTS

Test No.	Title of Test	Test Prerequisites	Test Objectives Summary of Testing and Acceptance Criteria
W-1.6	*RCS Flow Measurement	The tentative transfer of all the affected equipment from CONST to P PROD has been completed. Installation and required installation inspections, integrity testing, and cleaning and flushing activities of all associated equipment have been completed. The RCS must be in the hot shutdown mode with the reactor core in place. All RC pumps must be operable. All instrumentation has been calibrated and is available. All associated equipment is available for service.	Test objective is to obtain data for calculation of the full flow reactor coolant flow rate as derived from the reactor coolant pump power. Each of the four RCS loops will be specially instrumented and data will be taken with each pump running alone and in combination with one, two, and all three of the other pumps. Acceptance Criteria is that the data obtained must meet the functional design requirements specified in FSAR Section 5.1.
W-1.7	RCS Thermal Expansion	The tentative transfer of all the affected equipment from CONST to P PROD has been completed. Installation and required installation inspections, integrity testing, and cleaning and flushing activities of all equipment associated with the RCS have been completed. Instrumentation and recorders have been tested and calibrated, and are available for service.	Test objective is to measure the movement of the RCS piping and components due to thermal expansion to verify that no interferences occur, and to determine whether all components return to their original positions on cooling. Measurements are made at ambient temperature, at 100°F intervals up to 547°F, and after cooldown in coordination with other hot functional tests. All piping will be observed for possible unanticipated interferences. Acceptance criteria for this test will be that the cold and hot positions for the RCS piping are within specified tolerances and there are no observed interferences or obstructions during RCS heatup and cooldown.
W-1.8	*Reactor Coolant Flow Coastdown	The tentative transfer of all the affected equipment from CONST to P PROD has been completed. Installation and required installation inspections, integrity testing and	Test objectives are to measure the rate at which reactor coolant flow rate changes subsequent to various reactor coolant pump trips, and to measure various delay times associated

TABLE 14.1-1 (Sheet 8)

LIST OF PREOPERATIONAL TESTS

Test No.	Title of Test	Test Prerequisites	Test Objectives Summary of Testing and Acceptance Criteria
		cleaning and flushing activities of all associated equipment have been completed. Initial core loading has been completed and reactor plant is at hot shutdown conditions with all control rod assemblies at bottom position. All RCS pumps are operating. System pressure is being maintained in normal control band. Pressure damping devices, installed in elbow tap d/p cell sensing lines for the RCS flow measurement test, have been removed. Special test instruments have been calibrated and are available for use.	with the loss of flow accident. Measurements are made by tripping reactor coolant pumps from various operating configurations and recording coolant loops d/p, coolant pump breaker position, low-flow trip relays output, rod position indication and reactor trip breaker position. Acceptance criteria for this test shall be that the time delays associated with reactor trip from low flow and under voltage conditions are less then the maximum acceptable values and the core flow falls more slowly than values given in FSAR Section 15.2.
W-1.9	*RTD Bypass Flow Verification	The tentative transfer of all the affected equipment from CONST to P PROD has been completed. Installation and required installation inspections, integrity testing, and cleaning and flushing activities of all associated equipment have been completed. The plant is in the hot shutdown condition. Insulation has not been installed on the bypass loop piping or on the RCS piping in the vicinity of the RTD loop connections. Instrumentation has been tested and calibrated.	Test objective is to determine by calculation, the flow rates required in the hot and cold leg bypass lines to provide adequate liquid transport times, to determine flow rates, and to verify the low-flow alarm setpoints for the four RTD systems. The actual flow rates for each manifold and each hot and cold leg alone will be measured at normal operating pressure. The low-flow alarm setpoints will be checked by partially closing one manifold isolation valve. Alarm actuation should occur at 90 percent ±2 percent of normal flow. Any significant anomalies will be corrected after comparing data for all four loops. Acceptance criteria for this test shall be that the aforementioned objectives have been successfully met.

TABLE 14.1-1 (Sheet 9)

LIST OF PREOPERATIONAL TESTS

Test No.	Title of Test	Test Prerequisites	Test Objectives Summary of Testing and Acceptance Criteria
W-1.11	RCS Post Hot Functional Inspection, Cleaning, and Testing	The tentative transfer of all the affected equipment CONST to P PROD has been completed. Installation and required installation inspections and integrity testing have been completed. Preoperational testing on RCS heatup, cool-down, and at temperature have been completed. Equipment for high velocity flushing of the reactor internals and draining of the vessel is available. Final cleaning of the containment operating floor, polar and manipulator and crane surfaces, refueling cavity, and areas above the operating floor have been completed. Internals andhead stands have been cleaned and are ready to accept equipment.	Test objectives are to ensure that: 1) The RCS, including the reactor vessel internals and other components, are properly cleaned after hot functional testing, 2) The RCS is maintained in a state of cleanliness appropriate to nuclear service, and 3) The baseline inservice inspections are complete and acceptable prior to fuel loading. The RCS will be drained and the head, upper internals, and core barrel removed to their storage places. All internal clad surfaces will be inspected and surfaces will be flushed with high-purity water. Any residue will be analyzed. All components will be inspected and reassembled and the vessel will be filled and ultrasonically tested. Performance of all other examinations required to provide preservice inspection baseline data will be accomplished. All prerequisites outlined in the initial core loading procedure will be verified. Acceptance criteria for this test will be that the RCS and vessel internals and components met the cleanliness criteria and that RCS integrity has been verified.
W-2.1A	Spent Fuel Pit Leak Test	The tentative transfer of all the affected equipment from CONST to P PROD has been completed. Installation of all	Test objectives are to verify the leak-tightness of the spent fuel storage pit, transfer canal, cask loading area,

TABLE 14.1-1 (Sheet 10)

LIST OF PREOPERATIONAL TESTS

Test No.	Title of Test	Test Prerequisites	Test Objectives Summary of Testing and Acceptance Criteria
		components and equipment associated with this system has been completed in accordance with design specifications. All systems required to support Spent Fuel Pit Cooling system operation have either been preoperationally tested or cleared under an IOR for operation. Temporary means of draining the spent fuel pit, cask loading area, and transfer canal will be available. Means will be available for transferring demineralized quality water to the spent fuel pit, cask loading area, and transfer canal. Control quality air with connections to the transfer canal gate seal and the cask loading area gate will be available. The transfer canal gate seal and the cask loading area gate seal relief valves will have had their setpoints properly verified. The transfer tube blank flanges will be bolted in place.	transfer canal gate, and the cask loading area gate. Acceptance criteria for this test will be that leak-tightness of the pit, canal and gates is verified.
W-2.1B	Spent Fuel Pit Cooling System	The tentative transfer of all the affected equipment from CONST to P PROD has been completed. Installation of all components and equipment associated with this system has been completed in accordance with design specifications. All systems required to support the Spent Fuel Pit (SFP) Cooling system operation have either been preoperationally tested or cleared under an IOR for operation. Hydrostatic testing on all required piping and components has been completed. An adequate quantity of makeup water is available. Transfer canal gate and fuel cask loading pit gate are	The test objectives and criteria are: 1) To verify all alarm setpoints and to determine the valves, instrumentation, and controls function properly (the SFP will be filled from the RWST), 2) To verify operation of the skimmer loop, 3) To demonstrate filling and emptying of the SFP, transfer canal, and fuel-cask loading pit, 4) To verify circulation through the SFP deminerali-

TABLE 14.1-1 (Sheet 11)

LIST OF PREOPERATIONAL TESTS

Test No.	Title of Test	Test Prerequisites	Test Objectives Summary of Testing and Acceptance Criteria
		operational and open. Instrumentation and alarms have been checked, tested, and calibrated.	zers and heat exchanger loops using the SFP cooling pumps, 5) To verify recirculation and purification of refueling water in the refueling water storage tank (RWST). 6) To demonstrate drainage of the transfer canal to the Chemical and Volume Control System holdup tanks and refilling, and 7) To verify that heat exchangers and pumps meet vibrational requirements. Acceptance criteria will be that the SFPC system satisfy the requirements given in FSAR section 9.1.3.
W-2.1C	Spent Fuel Pit Cooling System (Open Core Cooling)	The tentative transfer of all the affected equipment from CONST to P PROD has beem completed. Installation of all components and equipment associated with this system has been completed in accordance with design specifications. All systems required to support the Spent Fuel Pit Cooling system operation have either been preoperationally tested or cleared under an IOR for operation. The cross-tie from the SFP spool pieces to the Residual Heat Removal heat exchanger has been installed. Pressure, temperature, water level, and flow indicators have been calibrated.	The test objectives are: 1) To verify the leak tightness of the Reactor Refueling Cavity, 2) To verify the ability to align the Spent Fuel Pit Pumps to the Residual Heat Removal (RHR) System for open core cooling in an allowable time frame, 3) To verify the ability of the Spent Fuel Pit pumps to deliver adequate flow to the RCS cold leg injection line through RHR, 4) To verify recirculation and purification of refueling water in the Reactor Refueling Cavity, and

TABLE 14.1-1 (Sheet 12)

LIST OF PREOPERATIONAL TESTS

Test No.	Title of Test	Test Prerequisites	Test Objectives Summary of Testing and Acceptance Criteria
			5) To verify the ability to drain the Reactor Refueling Cavity. Acceptance criteria for this test will be that the SFPC system satisfy the requirements given in FSAR section 9.1.3.
W-2.2	Residual Heat Removal System	The tentative transfer of all the affected equipment from CONST to P PROD has been completed. Installation and required installation inspections and cleaning activities have been completed in accordance with design specifications. All systems required to support operation and testing of the RHR system have either been preoperationally tested or cleared under an IOR. Electrical power supplies have been energized and all associated equipment is available for service. Instrumentation and alarms have been checked, tested, and calibrated. The RCS and auxiliary systems flushing and hydrostatic tests have been completed. The RCS is filled and vented and is at ambient temperature, with pressure less than 425 psig. The RHR System is filled and vented and all instrumentation and controls are operable. The CCS and ERCWS are also operable to supply cooling water.	The test objective is to verify the system capability of removing heat from the RCS. Secondary functions of refueling water transfer and pressure control during cooldown will be tested. Temperature and flow rate data will supply heat loads versus time for demonstration of RHR heat exchanger capability. Various valve interlocks will be tested at design conditions to verify proper operation of the system in the recirculation mode, RCS heatup and cooldown with letdown through the RHR system, and the refueling water transfer function. Acceptance criteria for the RHR system will be that the requirements given in FSAR section 5.5.7 have been satisfied.
W-3.1	Boron Recycle System	The tentative transfer of all the affected equipment from CONST to P PROD has been completed. Installation and required installation inspections, integrity testing, and cleaning and flushing activities have been completed. Control quality air and electrical power are available to all	The test objective is to verify the proper functioning of components of the Boron Recycle System. Using demineralized water, the tank level alarms and recirculation pump flow rate will be checked. The flow path for recirculation from the holdup tanks through the different components will be tested

TABLE 14.1-1 (Sheet 13)

LIST OF PREOPERATIONAL TESTS

Test No.	Title of Test	Test Prerequisites	Test Objectives Summary of Testing and Acceptance Criteria
		components requiring such. Instruments and controls have been checked and calibrated. Filter cartridges have been installed. Holdup tank A has been been filled to just below the high-level alarm setpoint. The following systems will be in service as required for conducting this test: 1) Primary Makeup Water System 2) WDS Gas Handling System 3) Auxiliary Boiler System 4) Component Cooling Water	for pump discharge pressure and flow rates. Distillate efflu- will be discharged to the moni- tor tank and then pumped through the various lines to the RWST, holdup tank, or to the demineralizers. All pump flow rates will be measured and compared to design values. All level alarms will be checked for proper annunciation. Boric acid concentration capability of the evaporator unit will be verified during hot functional testing. The Boron Recycle System is part of the Chemical Volume and Control System, and therefore acceptance criteria for this test will be that the require- ments given in the applicable portions of FSAR section 9.3.4 are satisfied.
W-3.2	Boric Acid System	The tentative transfer of all the affected equipment from CONST to P PROD has been com- pleted. Installation and required installation inspec- tions, integrity testing, and cleaning and flushing activi- ties have been completed. The PrimaryMakeup Water System and the Control Air System have either been preoperationally tested or cleared under an IOR. System hydrotesting has been completed. Instrumentation and controls have been checked and calibrated. Boric acid filters have been installed. Electrical power supplies have been energized. The boric acid system has been filled and vented.	Test objective is to verify and demonstrate the proper function of the equipment for batching, storing, and transferring 12- percent boric acid solution. The batching tank will be fill- ed with demineralized water, and heater capabilities and temperature alarms will be verified. Alternate use of the transfer pumps with each tank and alternate tanks will be demonstrated. The boric acid filter d/p will be measured. All pump discharge pressures and flow rates will be measured and all temperature indications and level alarms will be veri- fied. Capability to recircu- late from each boric acid tank through the boron injection tanks will be verified.

TABLE 14.1-1 (Sheet 14)

LIST OF PREOPERATIONAL TESTS

Test No.	Title of Test	Test Prerequisites	Test Objectives Summary of Testing and Acceptance Criteria
			Demonstration of the alternate makeup and emergency boration flow paths will be performed during hot functional testing. Acceptance criteria for the Boric Acid System will be that the requirements given in FSAR Section 9.3.4, those portions which apply, are satisfied.
W-3.3A	CVCS Functional Test	The tentative transfer of all the affected equipment from CONST to P PROD has been completed. Installation of all equipment associated with this system has been completed. The CVCS components and piping have been hydrostatically tested, cleaned, and flushed. Instrumentation and annunciators have been checked, tested, and calibrated. Control quality air and electrical power are available to all components requiring such. The RCS will be pressurized to the point in RCS cold hydro prior to starting the reactor coolant pump.	This test will provide the pre-functional checkout for components and flowpath verifications of the high pressure side of the CVCS with the RCS under atmospheric pressure. It will provide verification of the control logic for the valves and the instrumentation and alarm setpoints for the letdown systems. The control logic for the valves and recip-charging pump (now deleted) for the Rx Coolant Charging Flow System shall be verified. The operational capability of the charging pumps to deliver seal water to the RC pump will be demonstrated. The control logic for the valves, and instrumentation and alarm set-points for the Seal Water Injection System will be tested and verified. Instrumentation and alarm setpoints and control logic of the Volume Control Tank will be checked. Acceptance criteria for this test will be that the high pressure side of the CVCS satisfy the requirements given in FSAR section 9.3.4.
W-3.3B	CVCS Functional Test	The tentative transfer of all the affected equipment from CONST to P PROD has been completed. The Chemical Volume and Control System (CVCS) com-	The test demonstrates that the CVCS performs as required under all phases of operation. The capacities of letdown paths and the reactor coolant filter d/p

TABLE 14.1-1 (Sheet 15)

LIST OF PREOPERATIONAL TESTS

Test No.	Title of Test	Test Prerequisites	Test Objectives Summary of Testing and Acceptance Criteria
		ponents and piping have been cleaned and flushed, and hydrostatically tested. Electrically power and control quality air is available to all components requiring such. The Reactor Coolant System (RCS) is at no-load temperature and pressure. RCS heatup and temperature preoperational tests have beensuccessfully tested. Instrumentation, annunciators, and controls have been checked and calibrated. Reactor coolant filter has been installed. Mixed bed demineralizer, reactor coolant drain tank, boric acid transfer pumps and a PMWS pump are all available for service.	will be measured. Letdown temperature and pressure controller responses will be demonstrated. Proper operation of the excess letdown flow path is verified and the demineralizer is tested for design flow rates and pressure drops. Charging pumps will be tested for capability to deliver varying flow rates. Volume control tank level control, indications and alarm setpoints are checked. Operational calibration and testing of the different modes of dilution and boration will be accomplished. All flow rates of the various subsystems will be measured and verified. Acceptance criteria for this test will be that the CVCS satisfy the design requirements given in the FSAR section 9.3.4.
W-5.1	Liquid Waste Receipt and Storage	The tentative transfer of all the affected equipment from CONST to P PROD has been completed. Installation of all equipment associated with this system has been completed. All components have been cleaned, flushed, and hydrostatically tested. Instrumentation and alarms have been checked, tested, and calibrated. Control Air, Demineralized Water, Nitrogen Supply, and Primary Sampling Systems have either been preoperationally tested or cleared under an IOR. A filter cartridge assembly has been installed in the waste condenser tank filter housing. Primary water and electrical power supplies are available to all components requiring such. The Gaseous Waste Processing Systems has	The test demonstrates the capability of the WDS to receive liquid wastes and to transfer them to storage and/or disposal points. The tanks involved are the reactor coolant drain tank, chemical drain tank, laundry and hot shower drain tank, tritiated drain collector tank, and the sump tank. Each tank and its associated subsystem will be tested for operability including pumps, instrumentation and controls, and alarms. Purging of the tanks and vent header alignment will be done to facilitate proper functioning. Various flow rates will be determined from tank inventory changes over time for a comparison of actual pump performance to manufacturer's data. Automatic starting and stopping of the pumps will be

TABLE 14.1-1 (Sheet 16)

LIST OF PREOPERATIONAL TESTS

Test No.	Title of Test	Test Prerequisites	Test Objectives Summary of Testing and Acceptance Criteria
		been successfully tested and is in service.	tested and all related interlocks to tank levels will be verified. Acceptance criteria for this test will be that the requirements for liquid waste receipt and storage, given in FSAR section 11.2 will be satisfied.
W-5.2A	Liquid Waste Processing	The tentative transfer of all the affected equipment from CONST to P PROD has been completed. Installation and required installation inspections, integrity testing, and cleaning and flushing activities have been completed in accordance with design and testing specifications. Instrumentation and alarms are available for service. The Control Air, Demineralized Water, Nitrogen Supply, Primary Sampling, Auxiliary Steam, and Component Cooling Systems which are needed to support operation and testing have either been preoperationally tested or cleared under an IOR. The permanent filter cartridge assemblies have been installed in the waste condensate tank filter housing, cask decontamination collector tank filter housing, and waste evaporator feed filter housing. The preoperational test for liquid waste receipt and storage has been sufficiently completed to support testing of Liquid Waste Processing. Electrical power supplies have been energized. Tanks for the waste disposal system are empty except the tritiated drain collector tank which is filled with demineralized water.	This test will demonstrate the ability of the Liquid Waste Processing System to transfer and concentrate liquid waste. Also demonstrated will be the ability of the liquid waste system to safely discharge processed liquids to the environment or to recycle these liquids. Alarm setpoints and pump controller setpoints for the tritiated drain collector tank, floor drain collector tank, waste condensate tank, and the cask decontamination collector tank will be verified. Adequate flow performance for pumps will be demonstrated. Filters will be checked for capability of passing the required flow rates without developing excessive pressure differentials. Alarms will be tested for proper functioning. The waste evaporator and auxiliary waste evaporator will be checked to verify that design capacity requirements have been met. Acceptance criteria for this test will be that the liquid waste processing system satisfy the requirements given in FSAR section 11.2 (those portions which apply).

TABLE 14.1-1 (Sheet 17)

LIST OF PREOPERATIONAL TESTS

Test No.	Title of Test	Test Prerequisites	Test Objectives Summary of Testing and Acceptance Criteria
W-5.3	Solid Waste Processing	The tentative transfer of all the affected equipment from CONST to P PROD has been completed. Installation and required installation inspections, integrity tests, and cleaning, and flushing activities have been completed. The Primary Makeup Water System and the Nitrogen Supply System are available for service. Instrumentation and controls are available for are available for service. Control air and electrical power is available to all components requiring such. A sufficient supply of typical compressible solid material and an adequate inventory of resin are available.	Test objective is to demonstrate the capability to transfer radioactive waste material to drums for subsequent removal to a commercial burial site. The heat tracing on the appropriate concentrated lines is checked, drums are moved into place, and the necessary valving arrangement for each filling station will be established and tested utilizing non-radioactive liquid. Effluent paths from the evaporator, the chemical drain tank, and the spent resin storage tank to the filling station will be checked for flow rate veritifcation and automatic dispensing valve operation. The compressible waste operation will be demonstrated by filling drums. All handling components will be fully tested by operation. Acceptance criteria for the solid waste processing system will be that the requirements given in FSAR section 11.5 are satisfied.
W-5.4	Gaseous Waste Processing	The tentative transfer of all the affected equipment from CONST to P PROD has been completed. Installation and required installation inspections, integrity testing, and cleaning and flushing activities have been completed. The Primary Makeup Water, Control Air, Component Cooling, and Shield Building Ventilation Exhaust Systems have either been preoperationally tested or cleared under an IOR. Electrical power and control air are available to all components requiring such. The CVCS holdup tank and Nitrogen Supply System are available. Instrumentation and alarms	Test objective is to demonstrate that the Gaseous Waste System can safely and reliably store and dispose of the gaseous effluents from the plant and transfer gaseous inventory as needed to other components. The waste gas compressors will be tested for satisfactory operation and capacity for maintaining proper vent heater pressure and transfer of gases to decay tanks. The capacity of the gas decay tanks to supply cover gas for the CVCS holdup tanks will be demonstrated. Contents of the gas decay tanks will be sampled, both automatically and manually, with the gas analyzer, then

TABLE 14.1-1 (Sheet 18)

LIST OF PREOPERATIONAL TESTS

Test No.	Title of Test	Test Prerequisites	Test Objectives Summary of Testing and Acceptance Criteria
		have been checked, tested, and calibrated. The desired gas flow rate through the shield shield building exhaust vent has been obtained.	discharged to the shield building. The decay tanks will then be purged by nitrogen from the nitrogen supply header. All gaseous waste system alarms, interlocks, and controls will be verified as well as the efficiency of the HEPA and charcoal filters. Acceptance criteria for the Gaseous Waste Processing System will be satisfied upon verification that the requirements given in FSAR section 11.3 havehave been met.
W-6.1A1	Safety Injection System Integrated Flow Testing	The tentative transfer of all the affected equipment from CONST to P PROD has been completed. Installation and required installation inspections, integrity testing, and cleaning and flushing of all associated equipment have been completed. The containment spray pumps, centrifugal charging pumps, reciprocating charging pumps*, safety injection pumps, and residual heat removal pumps have been tested. The reactor vessel head and internals have been removed. The refueling seal for the reactor vessel flange has been installed and the water level has been established at the vessel flange. Provisions have been made to remove water from the refueling cavity. The Component Cooling Water, Essential Raw Cooling Water, and Ventilation Systems, which are needed to support testing have been aligned and placed into service.	This test will verify adequate net positive suction head (NPSH) during integrated operation of containment spray (CS), centrifugal charging (CC), reciprocating charging (RC), safety injection (SI), and residual heat removal (RHR) pumps. Adequate NPSH and performance during the recirculation mode will also be verified. Acceptance criteria for this test will be that there will be adequate NPSH during injection and recirculation modes for an integrated pump configuration of the RHR, SI, CC, and CS pumps.

TABLE 14.1-1 (Sheet 19)

LIST OF PREOPERATIONAL TESTS

Test No.	Title of Test	Test Prerequisites	Test Objectives Summary of Testing and Acceptance Criteria
W-6.1A2	Safety Injection System - Integrated Actuation and Alarm Test	The tentative transfer of all the affected equipment from CONST to P PROD has been completed. Installation and required installation inspections, integrity testing, and cleaning and flushing activi- of all associated equipment have been completed. All systems required to support operation and testing have either been preoperationally tested in various tests and all requirements for their operation and testing shall have been previously met.	This test shall verify to the extent practicable that required components respond in an integrated manner from a safety injection signal. Acceptance criteria for this test will be that the required components respond in an integrated manner.
W-6.1A3	SIS - Integrated Check Valve Flow and Integrity Test	The tentative transfer of all the affected equipment from CONST to P PROD has been completed. Preoperational testing of the accumulators, safety injection pumps, centrifugal charging pumps, and residual heat removal pumps has been sufficiently completed to support this test.	The primary SIS and RCS check valves will be tested for verification of opening at RCS temperature. Accumulation and injection primary and secondary check valves will be integrity tested. Acceptance criteria for this test will be that the aforementioned objectives have been successfully met.
W-6.1B	SIS - Accumulators and Related System Performance Test	The tentative transfer of all the affected equipment from CONST to P PROD has been completed. Installation and required installation inspections, integrity testing, and cleaning and flushing activities of all associated equipment have been completed. The Control Air, Nitrogen Supply, Chemical Volume and Control, Waste Disposal and Safety Injection Systems have either been preoperationally tested or cleared under an IOR. Instrumentation and alarms have been calibrated and are available for service. A means of filling the accumulators from the RWST and drain-	Proper control and operation of the valves required for accumulator filling, draining, charging, blowdown and SIS testing will be verified. The capability to fill each accumulator will be made. Level alarm setpoints and pressure alarm setpoints for each accumulator will be verified. Acceptable accumulator injection characteristics during a low pressure blowdown of each accumulator will be demonstrated. Accumulator valve opening capability under maximum expected differential pressure will be verified.

TABLE 14.1-1 (Sheet 20)

LIST OF PREOPERATIONAL TESTS

Test No.	Title of Test	Test Prerequisites	Test Objectives Summary of Testing and Acceptance Criteria
		ing them to the CVCS holdup tand and reactor coolant drain tank is available. The reactor vessel head and all internals have been removed and the vessel is ready to receive water. The refueling seal on the vessel flange has been installed. The refueling cavity has been cleared and readied to receive water. Electrical power supplies have been energized and associated equipment is ready for service.	Acceptance criteria will be that the requirements given in FSAR section 6.3, those portions pertaining, have been satisfied.
W-6.1C	Centrifugal Charging Pump and Related Injection System Performance Test	The tentative transfer of all the affected equipment from CONST to P PROD has been completed. Installation and required installation inspections, integrity testing, and cleaning and flushing activities of all associated equipment have been completed. Instrumentation and alarms have been checked, tested, and calibrated. All systems required to support operation and testing have either been preoperationally tested or cleared under an IOR. The reactor vessel head and internals have been removed and the vessel is ready to receive water. The refuelding cavity has been cleaned and is available to receive water. The refuelding seal on the reactor vessel flange has been installed and leak tested as required. Electrical power and control air are available to all components requiring such. A means for water removal from the vessel and refueling cavity has been provided. The status monitoring system multiplex cabinets are available so that	Proper control and operation of the valves required for high pressure injection will be verified. Control circuitry for the centrifugal charging pumps will be tested for porper operation. Pump hydraulic, mechanical, and electrical performances under miniflow and cold leg injection conditions will be demonstrated. Pump response time under these same conditions will be determined. Cold leg injection branch line throttle valves will be balanced. Acceptance criteria for this test will be that the requirements for the centrifugal charging pumps given in FSAR section 6.3, those portions applicable, have been satisfied.

TABLE 14.1-1 (Sheet 21)

LIST OF PREOPERATIONAL TESTS

Test No.	Title of Test	Test Prerequisites	Test Objectives Summary of Testing and Acceptance Criteria
		contacts from the valve circuits to the terminal strips may be verified. Ventilation for the pump room is available.	
W-6.1D	SIS - Safety Injection Pump and Related Injection System Performance Test	The tentative transfer of all the affected equipment from CONST to P PROD has been completed. Installation and required installation inspections, integrity testing, and cleaning and flushing activities have been completed. The Control Air, Safety Injection, Component Cooling Water, Essential Raw Cooling Water, and Auxiliary Building ventilation systems have either been preoperationally tested or cleared under an IOR. The RWST and associated piping, valves, and instrumentation have been installed, checked, and tested. The SIS to RCS piping, valves, and instrumentation located inside containment have been installed, checked, and tested. The reactor vessel head and internals have been removed and the refueling seal on the vessel flange has been installed. refueling cavity has been cleaned and a means for water removal from the cavity and vessel has been provided. Electrical power supplies have been energized.	Proper control and operation of the valves required for high-pressure injection by the safety injection pumps will be verified. Control circuitry for the safety injection pumps will be tested for proper operation. Pump hydraulic, mechanical and electrical performance under mini flow and cold leg injection conditions will be demonstrated. Pump response time under these same conditions will be determined. Cold leg injection branch line and hot leg injection conditions will be demonstrated. Acceptance criteria will be that the requirements for the safety injection pumps, given in FSAR section 6.3, those portions applicable, have been satisfied.
W-6.1E	SIS - Residual Heat Removal Pump and Related Injection System Performance Test	The tentative transfer of all the affected equipment from CONST to P PROD has been completed. Installation and required installation inspections, integrity testing, and cleaning and flushing activities of all associated equipment have been completed. Instrumentation and alarms	Proper control and operation of the valves required for low-pressure injection by the residual heat removal (RHR) pump will be verified. Various other valves used during safety injection will also be verified. Pump hydraulic, mechanical, and electrical performance under cold leg injection condi-

TABLE 14.1-1 (Sheet 22)

LIST OF PREOPERATIONAL TESTS

Test No.	Title of Test	Test Prerequisites	Test Objectives Summary of Testing and Acceptance Criteria
		have been checked, tested, and calibrated. The Safety Injection, Component Cooling Water, Essential Raw Cooling Water, Auxiliary Bldg, Ventilation Systems, and the Containment Spray Boundary Valves and Pump Suction have either been preoperationally tested or cleared under an IOR. SIS to RCS piping, valves, and instrumentation located inside containtainment have been installed, checked, and tested. A means for cooling the RHR pump room is available. The reactor vessel head and internals have been removed and the vessel is ready to accept water. The refueling cavity has been cleaned and a means for water removal from the cavity and vessel has been provided. The refueling seal on the vessel flange has been installed and leak tested. Electrical power supplies have been energized.	tions will be demonstrated. Response time for the RHR pumps will be determined for cold leg injection conditions. The RWST, RWST heaters, and associated functions will be verified. The automatic switchover from injection to recirculation mode is demonstrated to the extent practicable. The function of valve interlocks will be demonstrated. Acceptance criteria for the RHR pump will be that the requirements given in FSAR section 6.3, those portions applicable, have been satisfied.
W-6.1F	Integrated ESF Systems Test	Testing performed prior to fuel loading. The reactor vessel head, upper internals and lower internals have been removed. The reactor vessel and refueling canal are available to receive water. All safety systems cleaned, flushed, and hydro-tested. Safeguard circuitry sequenced and timed for proper actuation. All pumps and valves, actuated by safeguard signals, and diesel generators inspected and prepared for operation. All ESF equipment inspected and prepared for operation under ESF conditions with cooling water supplied as required.	The test objective is to demonstrate proper operation of various systems, subsystems, and equipment (valves, pumps, coolers, and valve interlocks) which are actuated by a Safety Injection signal and phase A and B Containment Isolation signal under normal plant power and blackout conditions. After reset of the signal all required ESF equipment will remain in its proper mode. All ESF equipment will be aligned such that any component receiving a Safety Injecttion or Containment Isolation signal will realign to the proper ESF position. Tests will be run on train A and on train B equip-

TABLE 14.1-1 (Sheet 23)

LIST OF PREOPERATIONAL TESTS

Test No.	Title of Test	Test Prerequisites	Test Objectives Summary of Testing and Acceptance Criteria
			ment with normal plant power available and on train A and B equipment under blackout conditions. All equipment will be observed to verify the equipment actuates and remains in the proper mode until after reset of Safety Injection and Containment Isolation signals. ment Isolation signals.
W-6.2	Upper Head Injection	The tentative transfer of all the affected equipment from CONST to P PROD has been completed. Installation and required installation inspections, integrity testing, and cleaning and flushing of all associated equipment have been completed. Instrumentation and alarms have been checked tested, and calibrated. The CVCS has either been preoperationally tested or cleared upon an IOR. Electrical power and control air are available to all components requiring such. Primary grade water is available for filling the UHI water accumulator. Nitrogen is available for pressurizing the gas accumulators, hydraulic accumulators, and test kit accumulators. Temporary seals for sealing the head injection nozzles and the ject deflector plate are availabe for installation. An adequate supply of hydraulic fluid is available.	Proper operation and interlock function of all Upper Head Injection System (UHIS), Hydraulic Isolation Valves (HIV), test line containment isolation valves, hydraulic valve actuation system, water level trip instruments, and related monitor lights and annunicators will be verified. Verification of the proper water volume delivered to an empty reactor vessel during normal pressure blowdown will be obtained by conducting a low pressure and a high pressure blowdown to the vessel. A demonstration will be conducted of UHIS performance during addition of makeup water or gas, draining or venting gas, flushing injection headers, and during periodic testing of the water level trip setpoint. Acceptance criteria for this test will be that the requirements for the UHIS given in FSAR section 6.3, those portions applicable, have been satisfied.
W-7.1A	Fuel Handling Tools and Fixtures	The tentative transfer of all the affected equipment from CONST to P PROD has been completed. Installation and required installation inspections, integrity testing, and	Proper operation of the fuel handling tools utilized in the auxiliary building will be demonstrated. Each tool will be checked for cleanliness, complete and smooth actuation,

TABLE 14.1-1 (Sheet 24)

LIST OF PREOPERATIONAL TESTS

Test No.	Title of Test	Test Prerequisites	Test Objectives Summary of Testing and Acceptance Criteria
		cleaning and flushing activities of all associated equipment have been completed. New fuel inspection platform batteries have been installed and charged. Electrical power supplies have been energized.	and operability of locking pins and interlocks. Brake actuation of the spent fuel pit bridge and new fuel elevator will be checked. Acceptance criteria for this test will be that the requirements for the fuel handling tools and fixtures, given in FSAR section 9.1.4, have been satisfied.
W-7.1B	Fuel Handling Tools and Fixtures	The tentative transfer of all the affected equipment from CONST to P PROD has been completed. Installation and required installation inspections, integrity testing, and cleaning and flushing activities of all associated equipment have been completed. Preoperation test W-7.1A has been successfully completed. The refueling and transfer canals are dry during checkout procedures using the dummy fuel assembly. A dummy fuel assembly for testing purposes has been provided.	Proper operation of the tools and equipment utilized for core loading and reloading will be demonstrated. All equipment will be checked for complete and smooth actuation, and operability of locking pins and interlocks. Proper brake actuation of the fuel transfer system and manipulator crane will be verified. Acceptance criteria for this test will be that the requirements for the fuel handling tools and equipment, given in FSAR section 9.1.4, have been satisfied. FSAR section 6.3, those portions applicable, have been satisfied.
W-7.2A	Fuel Transfer System Inside Auxiliary Bldg.	The tentative transfer of all the affected equipment from CONST to P PROD has been completed. Installation and required installation inspections, integrity testing, and cleaning activities of all associated equipment have been completed. Electrical power supplies have been energized. Preoperational tests "Fuel Handling Tools and Fixtures" and "125-Ton Auxiliary Building Crane" have been successfully completed. A dummy fuel	This test is a functional demonstration of the fuel handling equipment and tools that will be needed for initial fuel receipt. Equipment tested will be the Spent Fuel Assembly Handling Tool, New Fuel Assembly Handling Fixture, Spent Fuel Pit Bridge, and the New Elevator. This equipment will will be tested for proper performance, limit switch setpoint verification, and brake actuation.

TABLE 14.1-1 (Sheet 25)

LIST OF PREOPERATIONAL TESTS

Test No.	Title of Test	Test Prerequisites	Test Objectives Summary of Testing and Acceptance Criteria
		assembly has been provided for use during testing. A temporary exclusion area has been erected around the assembly handling area. The spent fuel pit and transfer canal are dry during checkout procedures.	Acceptance criteria for this test will be that the requirements given in FSAR section 9.1, those portions applicable, have been satisfied.
W-7.2B	Fuel Transfer System Inside Reactor Building	The tentative transfer of all the affected equipment from CONST to P PROD has been completed. Installation and required testing of all associated equipment have been completed. Fuel Handling Tools testing and test W-7.2A have been successfully completed. Electrical power supplies have been energized. The dummy fuel assembly is available for use. The blind flange on the transfer tube has been removed and the gate is open. The lower internals have been installed in the vessel for acceptance of the dummy fuel assembly.	A functional demonstration of the Fuel Transfer System, the upending frames, the conveyor car, the manipulator crane, and the RCC change fixture will be made. The dummy fuel assembly will be moved from the spent fueld pit to a selected position in the reactor core via the Fuel Transfer System and the RCC change fixture, and then returned while observing for smooth operation without binding or interference of any equipment involved. Setpoints and limitations of the manipulator crane will be verified while the fuel assembly is being inserted and withdrawn from the core. Accessibility of the manipulator crane to selected core locations and accuracy of its location controls will be demonstrated. Acceptance criteria for this test will be that the requirements given in FSAR section 9.1, those portions applicable, have been satisfied.
W-7.2C	Fuel Transfer System Manipulator Crane Indexing	The tentative transfer of all the affected equipment from CONST to P PROD has been completed. Installation and required testing and cleaning have been completed. Preoperational test W-7.2B has been successfully completed. The	The manipulator crane core indexing indicator will be demonstrated by positioning a dummy fuel assembly into selected core locations. Accessibility of the crane to each location will be observed. Also scribe marks on the crane

TABLE 14.1-1 (Sheet 26)

LIST OF PREOPERATIONAL TESTS

Test No.	Title of Test	Test Prerequisites	Test Objectives Summary of Testing and Acceptance Criteria
		The fuel assembly has been moved to the reactor side upender, is vertical, and ready to be lifted by the Manipulator crane. The reactor vessel lower internals have been installed and are ready to accept fuel assemblies. Electrical power supplies have been energized. Special test equipment has been calibrated.	bridge rail will be made to reference the bridge location at the reactor side upender, the RCC change fixture, and all reactor center core locations for further maintenance and/or operations. Acceptance criteria will be that the requirements for the manipulator crane given in FSAR section 9.1.4.2.2 have been satisfied.
W-7.2D	Fuel Transfer System - Checkout of Fuel Storage Racks	The tentative transfer of all the affected equipment from CONST to P PROD has been completed. Installation of all associated equipment and required installation inspections, integrity testing, cleaning and fuel assembly storage and refueling equipment design interface requirements have been completed. Testing on fuel handing tests on the 125-ton crane have been successfully completed. The auxiliary building crane hoist has been set to limit hook seep to a maximum of 7 ft/min. A temporary exclusion area has been erected around the spent fuel and new fuel storage pits. The spent fuel pit is dry during checkout procedures. Electrical power supplies have been energized. A dummy fuel assembly is available for use.	This test shall monitor insertion and withdrawal drag forces between the dummy fuel assembly and the spent fuel pit and new fuel storage racks. Acceptance criteria for this test will be that the requirements for the fuel storage given in FSAR secitons 9.1.1 and 9.1.2, have been satisfied.
W-8.1A	*Reactor Protection System Operational Time Response Time	The tentative transfer of all the affected equipment from CONST to P PROD has been completed. Installation and required installation inspections and integrity testing of all associated equipment have been completed. Instrumenta-	The primary sensors for pressure level, differential pressure, and flow measurement will be tested by replacing the process variable with a Hydraulic Ramp Generator and ramping the sensor input through the trip setpoint value. The pri-

TABLE 14.1-1 (Sheet 27)

LIST OF PREOPERATIONAL TESTS

Test No.	Title of Test	Test Prerequisites	Test Objectives Summary of Testing and Acceptance Criteria
		tion and annunciators have been checked, tested, and calibrated. Electrical power supplies have been energized for at least four hours. Testing on the Reactor Protection System and Engineered Safety Features Actuation System has been successfully completed. successfully completed.	mary sensors for temperature will be tested by the Loop Current Step Response method in which self-heating in an RTD is induced by stepping up the current through it and observing the change in resistance. Thus the response times for all the sensors will be measured. Acceptance criteria for this test will be that the response time for each sensor is less than or equal to that listed in the Technical Specification.
W-8.1B	*Reactor Protection System Operational Time Response Time	The tentative transfer of all the affected equipment from CONST to P PROD has been completed. Installation and required installation inspections and integrity testing of all associated equipment have been completed. Instrumentation and annunciators have been checked, tested, and calibrated. Electrical power supplies have been energized for at least four hours. Testing on the Reactor Protection System and Engineered Safety Features Actuation System has been successfully completed.	This test measures the time it takes for a trip signal entering the various reactor trip circuits to automatically open the series reactor trip breakers when the condition monitored reaches a preset value. The total response time is broken down into four segments to that they can be verified separately they are (1) sensor response time, (2) analog and logic circuitry delay time, (3) reactor trip breaker delay, and (4) gripper release time. The response times will be conservatively measured from the time at which the switch is thrown to initiate the signal input. All the bistables in the reactor protection system requiring clearing will be cleared with simulated signals, then each reactor protection system circuit will be tripped individually or in coincidence as required with the response times measured and recorded. Acceptance criteria for the RPS will be that the response time to reactor trip for various signals is less than or equal to the values given in FSAR section 7.2.1.2.6.

TABLE 14.1-1 (Sheet 28)

LIST OF PREOPERATIONAL TESTS

Test No.	Title of Test	Test Prerequisites	Test Objectives Summary of Testing and Acceptance Criteria
W-8.2	Reactor Protection System Operational Test	The tentative transfer of all the affected equipment from CONST to P PROD has been completed. Installation and required installation inspections and integrity testing of all associated equipment have been completed. Instrumentation and annunciators have been checked, tested, and calibrated. The plant computer has been preoperationally tested and has been operating for at least four hours. Electrical power supplies have been energized for at least four hours.	This test will demonstrate the operability of the Reactor Protection System including all field wiring from the bistables through the protection logic to the reactor trip relays and the alarms. Simulated signals will be used as needed to clear all bistables to the Reactor Protection System. Then each bistable will be tripped individually and in each combination which should produce a reactor trip. The appropriate actions (reactor trip, computer printout, annunciator actuation, etc.) will be checked after each step and verified. Acceptance criteria for the Reactor Protection System will be that the requirements given in FSAR section 7.2 have been satisfied.
W-8.3A	Engineered Safety Features Actuation System Operational Test	The tentative transfer of all the affected equipment from CONST to P PROD has been completed. Instrumentation and annunciators have been checked, tested, and calibrated. The plant processing computer has been preoperationally tested, and has been operating for at leat four hours.	This test verifies that each interlock, blown fuse, loss of power supply, and other associated logic operates the General Warning Relay in the Train A and Train B SSPS cabinets. Acceptance criteria for this test will be that the requirements given in FSAR section 7.3 have been satisfied.
W-8.3B	Engineered Safety Features Actuation System (ESFAS) Operational Test	The tentative transfer of all the affected equipment from CONST to P PROD has been completed. Installation and required installation inspections and integrity testing of all associated equipment have been completed. Instrumentation and annunciators have been checked, tested, and calibrated. The plant processing computer has been preopera-	This test will demonstrate that the logic of the Engineering Safeguards System (ESS) is operating properly. The actuating relays will be verified for proper actuation when an automatic or manual safeguards system signal is initiated. Annunciators and status lights associated with operation of the ESS will be tested for proper functioning. The Safeguard

TABLE 14.1-1 (Sheet 29)

LIST OF PREOPERATIONAL TESTS

Test No.	Title of Test	Test Prerequisites	Test Objectives Summary of Testing and Acceptance Criteria
		tionally tested and has been operating for at least four hours. Electrical power supplies have been energized for at least four hours.	Test Cabinet and the Logic Test Panel will be verified for proper operation. Acceptance criteria for this test will be that the requirements for the ESFAS, given in FSAR section 7.3 have been satisifed.
W-8.4	Control System Tests for Turbine Runback	The tentative transfer of all the affected equipment from CONST to P PROD has been completed. Installation and required installation inspections, integrity testing, and cleaning and flushing activities have been completed. Instrumentation and annunciators have been checked, tested, and calibrated. Electrical power and control quality air are available to all components requiring such. Raw cooling water is available to the Electro-Hydraulic (EH) fluid unit and turbine oil heat exchangers. The turbin lube oil and EH hydraulic fluid systems are filled and the level is within the permissible band. The reactor is in cold shutdown condition. The turbine shall be latched and high pressure fluid is available to permit operation of the governor valves.	The logic that generates the control signals for the EH control system will be tested to ensure proper operation of the logic networks and proper annunciation in the control room. To ensure proper interface matching, test signals will be actuated from the source analog bistable and will result in a turbine runback situation. Key points will be monitored to ensure proper runback rate. Acceptance criteria for this test will be that after tripping the logic system, annunciators operate properly and the load reference reduction should runback at a rate of 200 percent per min. for the first 1.5 seconds of each 30 seconds during the runback. Voltage to the function generators should change similarly to the runback at a rate of 20-V DC per min.
W-8.5	*Reactor Plant Systems Setpoint Verification	The tentative transfer of all the affected equipment from CONST to P PROD has been completed. Instrumentation and equipment shall have been aligned and calibrated, and setpoints adjusted per applicable instructions. All instrumentation will have been energized at least the minimum length of time to achieve	The objectives of the test are to verify that initial setpoint adjustments have been made prior to plant startup and to specify and maintain records of these setpoints which require readjustment or probable readjustment during subsequent startup and test operations. Upon completion of all initial

TABLE 14.1-1 (Sheet 30)

LIST OF PREOPERATIONAL TESTS

Test No.	Title of Test	Test Prerequisites	Test Objectives Summary of Testing and Acceptance Criteria
		stability.	setpoint adjustments and just prior to initial startup, verification that each setpoint has been established will be made and the value of each setpoint changes performed during startup and testing operations will be recorded. When performing setpoint verification, auxiliary functions associated with a trip will also be verified and documented. Setpoints will be verified to be within the tolerances specified by applicable specification documents. Acceptance criteria for this test will be that all initial setpoints agree with the latest precautions, limitations, and setpoints as documented or proper justification for discrepancies have been recorded.
W-9.1	*Control Rod Drive Mechanism (Timing)	The tentative transfer of all the affected equipment from CONST to P PROD has been completed. Installation and required installation inspections and integrity testing of all associated equipment have been completed. The RCS has been filled and vented and the boron concentration is equal to or greater than that required for refueling shutdown. All rods are fully inserted and proper drive mechanism coil polarity, stepping sequence, and operational timing has been verified. The core has been loaded and the reactor is at hot shutdown conditions. Instrumentation has been checked, tested, and calibrated.	This test will verify that the proper timing of each Rod Control System slave cycles has been properly set at the factory and will provide documentation of proper slave cycles timing and mechanism operation. An operational check of each full length Control Rod Drive Mechanism (CRDM) with a Rod Cluster Control Assembly (RCCA) attached will be performed under both cold and hot conditions. The lift coil, movable gripper coil, and stationary gripper coil currents will be checked. Acceptance criteria for this test will be that the timing of each slave cycle is acceptable, coil currents are within set limits, and that each full length CRDM is operational.

TABLE 14.1-1 (Sheet 31)

LIST OF PREOPERATIONAL TESTS

Test No.	Title of Test	Test Prerequisites	Test Objectives Summary of Testing and Acceptance Criteria
W-9.2	*Rod Control System	The tentative transfer of all the affected equipment from CONST to P PROD has been completed. Installation and required installation inspections tions and integrity testing of all associated equipment have been completed. Instrumentation and annunciators have been checked, tested, and calibrated. Electrical power supplies have been energized. The Nuclear Instrumentation System Source Range Channels are in operation and the baseline count rate has been established. The reactor is at hot shutdown condition with rods rully inserted and boron concentration at refueling shutdown level. Testing on CRDM timing, rod drop time, and position indicators have been successfully completed.	The test demonstrates and documents that the full length Rod Control System satisfactorily performs the required control and indication functions. Each bank of shutdown rods and control rods will be operated individually in the withdraw and insert directions using the normal controls. Sufficient travel will demonstrate drive operability, position indication and other instrumentation without unduly increasing the count rate on any source channel above the established baseline rate. Automatic sequencing of control banks is also demonstrated and bank overlap verified. Rod bank starting and stopping positions will be compared with the control settings for verification. Acceptance criteria for this test will be that the status lights, stop counter, rod position, and speed indicators are operating properly and that the rod bank overlap switches function within the prescribed limits.
	NOTE: Additional testing of the rod control system was performed during the 1988 unit 2 restart program via STI-79 and -118.		
W-9.3	*Rod Drop Time Measurement	The tentative transfer of all the affected equipment from CONST to P PROD has been completed. Installation and required installation inspections and integrity testing of all associated equipment have been completed. The RCS has been filled and vented, rods are fully inserted, and the boron concentration is at the level required for refueling shut-	Test objective is to measure the drop times of individual full length control rods. The drop times will be measured by recording the voltage signals of the stationary gripper coil, the rod position detector primary coil output, and the station output power bus as functions of time. The drop time of every full length rod will be measured under cold no-

TABLE 14.1-1 (Sheet 32)

LIST OF PREOPERATIONAL TESTS

Test No.	Title of Test	Test Prerequisites	Test Objectives Summary of Testing and Acceptance Criteria
		down. The Nuclear Instrumentation System source range channels are in operation and the baseline rate has been established. Instrumentation has been checked and calibrated.	flow, cold full-flow, hot no-flow, and hot full-flow conditions, to assure no anomalous effects occur. Results will be evaluated for conformance to plant technical specifications. Acceptance criteria for this test will be that the rod release time and the rod drop time will be less than or equal to 150 milliseconds and 2.2 seconds respectively.
W-9.5	*Rod Position Indication System	The tentative transfer of all the affected equipment from CONST to P PROD has been completed. Installation and required installation inspections and integrity testing of all associated equipment have been completed. Instrumentation and alarms have been checked, tested, and calibrated. Electrical power supplies have been energized. The rods are fully inserted and boron concentration is at refueling shutdown levels. Proper drive mechanism coil polarity stepping sequence, and operational timing has been verified. Nuclear Instrumentation System source range channels are in operation and the baseline count rate has been established. Testing of the CRDM timing has been successfully completed.	The test objective is to verify that the Rod Position Indication System satisfactorily performs the required indication and alarm functions for each rod and to demonstrate all rods operate satisfactory over their entire range of travel. The dropped rod function will be tested confirming rod bottom bistable trip voltage and control room annunciations. Shutdown banks will be fully withdrawn by bank in 20 step increments while recording (for each rod) analog output voltage and control room readout on rod position plus the group step position indication. The banks will then be inserted to rod bottom. Any deficiencies or erratic operation will be recorded. If adjustments in the zero or scan chassis are required, the procedure is repeated. The procedure will also be completed for all the control banks, recording in addition the pulse-to-analog converter chassis bank position digital readout. Acceptance criteria for the Rod Position Indication System will be that the system indicators and alarms function as speci-

TABLE 14.1-1 (Sheet 33)

LIST OF PREOPERATIONAL TESTS

Test No.	Title of Test	Test Prerequisites	Test Objectives Summary of Testing and Acceptance Criteria
			fied by the vendor and in FSAR section 4.2.3.2.2 and that the full length rods operate over range of travel within the voltage-position limits.
W-10.1	*Automatic Reactor Control System	The tentative transfer of all the affected equipment from CONST to P PROD has been completed. Installation and required installation inspections and integrity testing of all associated equipment have been energized. All systems required to support operation and testing have either been preoperationally tested or cleared under an IOR. Plant is at equilibrium conditions of 15- to 30-percent power. The following control systems have been checked and placed in automatic control: Pressurizer Level Control System, Pressurizer Pressure Control System, Steam Dump Control System, SG Level Control System, and FW Pump Speed Control System. Reactor Rod Control System is in manual with control bank D in maneuvering band and all others withdrawn.	Test objective is to verify the performance of the Automatic Reactor Control System in maintaining reactor coolant temperature within acceptable steady state limits. Flux, power mismatch, T average, T Ref, and pressure signals are continuously recorded. Reactor control will be placed in automatic to verify that T average is within '1.5°F of T Ref. Reactor control is switched to manual and T average will be successively increased and decreased to 6°F higher and 6°F lower than the T Ref setpoint and the reactor switched to automatic control. The transient recovery of the system will be observed to within '1.5°F of T Ref. Recorder traces will be labeled with pertinent parameters and retained for documentation. Acceptance criteria for this test will be that the Automatic Reactor Control System maintains T avg within '1.5°F of T Ref.
W-10.2	*Automatic Steam Generator Level Control	The tentative transfer of all the affected equipment from CONST to P PROD has been completed. Installation and required installation inspections and integrity testing of all equipment associated with the main feedwater pump turbines and their control hardware have been completed. Instrumenta-	Test objective is to verify the stability of the system follow-simulated transients at low power conditions and to verify the variable speed feature of the main feedwater pumps. Transients are simulated by manipulation of controllers and test input signals. Continuously monitored parameters are steam pressure, steam flow,

TABLE 14.1-1 (Sheet 34)

LIST OF PREOPERATIONAL TESTS

Test No.	Title of Test	Test Prerequisites	Test Objectives Summary of Testing and Acceptance Criteria
		tion and annunciators have been checked, tested, and calibrated. Electrical power supplies have been energized. supplies have been energized. All systems required to support operation and testing have either been preoperationally tested or cleared under an IOR. The reactor is 15-20 percent of rated power level with at least three RC pumps and one MFW pump running. The SG Level System is in the manual mode and the Steam Dump System is in the automatic mode.	feedwater flow, SG narrow range level, level controller output, and flow controller output. Each SG level controller will be tested individually and setpoints will all be checked. Feedwater pumps variable flows will be reasured and response times will be checked. Acceptance criteria for this test will be that the SG level overshoot/undershoot is less than ±2.5 percent for a setpoint or level increase/decrease and the level returns to setpoint within two minutes following a change. Also the feedwater pump speed oscillation are less than 3 percent of steady state operating speed and speed stabilizes within two minutes following a step change, and the pump speed overshoot/undershoot is less than 1 percent following a 5 percent step speed change.
W-10.3	Steam Dump Control	The tentative transfer of all the affected equipment from CONST to P PROD has been completed. Installation and required installation inspections, integrity testing, and cleaning and flushing activities of all associated equipment have been completed. Instrumentation and alarms have been checked, tested, and calibrated. The Control Air System and Condenser Circulating Water System have either been preoperationally tested or cleared under an IOR. The plant is in hot shutdown condition with one or more RC pumps operating and all power operated atmos-	Test objective is to verify proper operation of the Steam Dump System in the manual and automatic modes and to verify system protective functions. A variable test signal will be injected into each SG pressure controller to test the associated atmospheric relief valve response. The Condenser Steam Dump System will be checked to verify the appropriate valves modulate open on an increasing pressure controller signal and closed on a decreasing signal. Appropriate control panel lighting indications are checked and local visual observations are made for verification observations are made for verification of valve position.

TABLE 14.1-1 (Sheet 35)

LIST OF PREOPERATIONAL TESTS

Test No.	Title of Test	Test Prerequisites	Test Objectives Summary of Testing and Acceptance Criteria
		pheric, safety, and condenser dump valves operational. The Steam Dump Control System has been calibrated.	Temperature signals will be varied to check deviation alarms and turbine trip alarms. Timing tests will be conducted concurrently to record valve positions as functions of time to determine the responses. Acceptance criteria for this test will be that the condenser steam dump valves and the atmospheric steam relief valves operate properly under cold and hot no-load conditions.
W-10.4	*Initial Turbine Roll	The tentative transfer of all the affected equipment from CONST to P PROD has been completed. Installation and required installation inspections, integrity testing, and cleaning and flushing activities of all associated equipment have beem completed. Equipment power and control air are available to all components requiring such. All systems required to support operation and testing have either been preoperationally tested or cleared under an IOR. RCS is at hot shutdown conditions with RCS pumps and charging pumps operational. Condenser vacuum has been maintained, steam lines have been warmed and the Condenser Circulating Water System is in operation. Strainers have been installed in the MS lines upstream of the throttle valves.	This test shall provide the guidelines, limitation, and restrictions for the operation of the turbine-generator unit and related plant systems. Acceptable performance of the turbine-generator unit will be made by rolling the turbine at various speeds with steam generated by RC pump or nuclear heat. During the test, reactor coolant temperature, steam generator level, and pressurizer level and pressure will be continuously recorded. Acceptance criteria for this test will be that the turbine has been rolled safely and the values recorded on the turbine supervisory recorder charts for the final run are within the specified limits.
W-10.5	*Dynamic Automatic Steam Dump Control	The tentative transfer of all the affected equipment from CONST to P PROD has been completed. Installation and required installation inspection, integrity testing, and cleaning and	The test objective is to verify proper closed loop operation of T average Steam Dump Control System in the turbine trip and load rejection mode, to demonstrate controller setpoint adequacy, and to obtain final set-

TABLE 14.1-1 (Sheet 36)

LIST OF PREOPERATIONAL TESTS

Test No.	Title of Test	Test Prerequisites	Test Objectives Summary of Testing and Acceptance Criteria
		flushing activities of all associated equipment have been completed. Instrumentation and alarms have been checked, tested, and calibrated. Electrical power and control air are available to all components requiring such. The reactor is critical at no load temperature and pressure, and in a condition to permit an increase in core power to approximately 15 percent. The Steam Dump Control preoperational test (W-10.3) has been successfully completed.	tings for steam pressure control of condenser dump valves. Reactor power is increased to approximately 10 percent by rod withdrawal and steam dump condenser. Setpoint on pressure controller will be increased prior to switching up T average control which will rapidly modulate open condenser dump valves. System response will be observed for stability in the automatic mode. Turbine operating conditions will be simulated with reactor at approximately 10 percent power in manual, T ref set at no load and automatic control actuated to simulate turbine trip and resulting steam dump. All essential parameters will be recorded and identified. Acceptance criteria for this test will be that the steam dump control system operates properly in the turbine trip and load rejection closed loop modes and that the steam header pressure controller responds properly to maintain a stable pressure.
W-11.1	Nuclear Instrumentation System (NIS)	The tentative transfer of all the affected equipment from CONST to P PROD has been completed. Installation and required installation inspections, integrity testing, and cleaning and flushing activities of all associated equipment have been completed. Instrumentation and alarms have been checked, tested, and calibrated. The Solid State Protection and Annunciator System has either been preoperationally tested or cleared under an IOR and	Test objective is to verify the system performs the required indicating and control functions through the source, intermediate, and power ranges of operation. All functions will be tested utilizing permanently installed controls and adjustment mechanisms. All operational modes of the source range channels, intermediate range channels, power range channels, comparator, and range rate circuits will be tested for the proper functioning of all indicator lights, bistable

TABLE 14.1-1 (Sheet 37)

LIST OF PREOPERATIONAL TESTS

Test No.	Title of Test	Test Prerequisites	Test Objectives Summary of Testing and Acceptance Criteria
		has been operational for at least 4 hours. The NIS is energized and has been operational for at least 4 hours. Source range detectors located outside the reactor missile shield cavity have been electrically connected and insulated. Equipment for handling and transport of the neutron calibration source are available for use. Electrical power supplies have been energized.	trips, and alarms. High voltage power supply plateaus and operating voltage settings for the source range detectors will be determined. The source range channels will be checked for electrical noise. Acceptance criteria for this test will be that NIS performs the required indicating and control functions through the source, intermediate, and power ranges of operation.
W-11.3	Incore Thermocouple and RTD Cross Calibration	The tentative transfer of all the affected equipment from CONST to P PROD has been completed. Installation and required installation inspections and integrity testing of all associated equipment have been completed. Instrumentation has been checked, tested, and calibrated. The plant computer is operational and the thermocouple temperature compensation and the in-core thermocouple mapping programs have been loaded. All thermocouple wiring has been completed and calibration data is available for RTD's and TC's. All reactor coolant pumps are in operation.	Test objective is to verify correct resistance versus temperature and millivolt versus temperature characteristics of resistance temperature detectors (RTD's) and thermocouples (TC's) respectively, and to determine necessary corrections for accurate temperature readout. Data will be recorded at nominal RCS temperatures of 250°F, 350°F,
W-11.4	*Incore Moveable Detectors	The tentative transfer of all the affected equipment from CONST to P PROD has been completed. Installation and required installation inspections, integrity testing, and cleaning activities of all associated equipment have been completed. Control quality air and electrical power are available to all components requiring such.	This test will verify that the six incore detector units and controls function properly. The top and bottom core setpoints for each detector path will be set and all limit switch settings will be verified. Proper performance and switch action of the transfer units, performance of the detector drive units in all modes of operation, interlock functions, and multiple drive

TABLE 14.1-1 (Sheet 38)

LIST OF PREOPERATIONAL TESTS

Test No.	Title of Test	Test Prerequisites	Test Objectives Summary of Testing and Acceptance Criteria
		All manual isolation valves on the seal table are in the open position. The CO_2 gas purge system has been isolated. The reactor core has been loaded. The Incore Mechanical System has been cleaned, lubricated, checked, and top and bottom core setpoints established for all detectors. The purge, leak detection, and drain systems are in operation.	capability will be demonstrated. Purge gas, lead detection, and alarm systems will be verified for proper operation. Contact closure inputs to the computer will be verified for accuracy. Acceptance criteria for the incore moveable detectors is that the requirements given in FSAR section 7.7.1.9.2 have been satisfied.
W-11.5	Preoperational Testing of Computer Hardware	The tentative transfer of all the affected equipment from CONST to P PROD has been completed. Installation and required installation inspections and integrity testing activities of all associated equipment have been completed. Environmental control for the computer room has been established. The CO_2 system in the computer room is available and functioning. Electrical power supplies have been energized. The computer has been energized and in service for four hours.	The test verified that the internal wiring of the process computer is proper and that the internal CPU, I/O and analog converters function properly. Proper operation of the computer and all peripheral hardware is verified by running a series of diagnostic tests supplied by the vendor as a tape systems test library. Upon completion of these diagnostic tests, the computer is ready for software verification and checkout. Acceptance criteria for this test will be that the process computer functions properly, the core memory, CPU, I/O, and analog converters behave correctly, and interrupt, fail-safe operation and protection features perform as required.
W-11.6	Computer Input and Data Printout Verification	The tentative transfer of all the affected equipment from CONST to P PROD has been completed. Installation and required installation inspections and integrity testing of all associated equipment have been completed. Electrical power supplies have been energized and the computer	Test objective is to verify the calibation and operation of the instrumentation involved in the measurement, transmittal, conversion, and computer printout of process parameters. The computer internal circuitry for each data point "address" will be tested prior to simulated input signals to test the

TABLE 14.1-1 (Sheet 39)

LIST OF PREOPERATIONAL TESTS

Test No.	Title of Test	Test Prerequisites	Test Objectives Summary of Testing and Acceptance Criteria
		has been operating for at least four hours. Pre-operational testing of the computer has been completed and continuously monitored and all associated programs have been loaded. The POST TRIP PRINT Program has been disabled.	data transmittal circuits. The corresponding process instrument channel signal injection switch will be placed in the test position, voltage input signals initiated, and the computer output checked for appropriate response for varied signal levels. The input test signal and the calculated converted valve will be recorded. A computer printout will be performed and verification will be made that the engineering valve output corresponds to the test input. Proper functioning of the computer alarm system will be verified. Acceptance criteria for this test will be that the check sensor calibrate computer function is accurate, conversion of input to engineering units is correct, all hardware is properly installed, and the computer alarm system functions properly.
W-11.7	*Calibration of Steam and Feedwater Flow Instrumentation at Power	The tentative transfer of all the affected equipment from CONST to P PROD has been completed. Installation and required installation inspections, integrity testing, and cleaning and flushing of all associated equipment have been completed. All systems required to support operation and testing have either been preoperationally tested or cleared under an IOR. Instrumentation and special test meters have been checked, tested, and calibrated for worth and the calibration curves are on hand.	The objective of the test is to calibrate the feedwater flow and steam flow instruments to the feedwater flow as determined by special test instruments. The feedwater flow, as determined by the special test equipment, is compared to recorded readings from plant instruments indicating steam and feedwater flow in the main control room. Gain adjustments in the detector output voltage of plant instruments are performed as necessary to obtain best possible fit of plant instrument data to that of the special instrumentation. This test will be performed while

TABLE 14.1-1 (Sheet 40)

LIST OF PREOPERATIONAL TESTS

Test No.	Title of Test	Test Prerequisites	Test Objectives Summary of Testing and Acceptance Criteria
			the plant is at steady state conditions of approximately 0, 30, 50, 75, and 100 percent. Acceptance criteria for this test will be that the feedwater and steam flow instrumentation has been properly calibrated and its reproducibility is within the specified limits.
W-11.10	*Startup Adjustments of Reactor Control Systems	The tentative transfer of all the affected equipment from CONST to P PROD has been completed. Installation and required installation inspections and integrity testing activities of all associated equipment have been completed. All systems required to support operation and testing have either been preoperationally tested or cleared under an IOR. The core has been loaded and the plant is at 0 percent power.	This test is to obtain system temperature and steam pressure data at steady-state conditions for zero power and at the hold points during power escalations. Evaluation of this data will provide the basis for the adjustments in the following manner during the power escalation: 1) Primary system temperature data will be used for making signal adjustments to programmed TAVG; 2) Turbine impulse pressure data will be used for adjusting the pressure instruments and signals to the Reactor Control System and the Turbine E-H Control System. Acceptance criteria for this test will be that the optimum TAVG program has been established without exceeding its design values.
W-12.1	Ice Condenser Reactor Containment	The tentative transfer of all the affected equipment from CONST to P PROD has been completed. Installation and required installation inspections, integrity testing, and cleaning and flushing activities have	This test is divided into three sections which will be performed independently of each other. They are: (1) functional logic testing of each component of the glycol system and performance tests of the pumps and chillers, (2) verification of

TABLE 14.1-1 (Sheet 41)

LIST OF PREOPERATIONAL TESTS

Test No.	Title of Test	Test Prerequisites	Test Objectives Summary of Testing and Acceptance Criteria
		mentation and alarms have been checked, tested, and calibrated. All systems required to support operation and testing have either been preoperationally tested or cleared under an IOR. Chillers have been properly charged with refrigerant and glycol circulation system has been filled and flow balanced. Heat tracing has been installed on the Air Handling Unit drain lines. Electrical power and control air are available to all components requiring such. Setpoints for various valves have been made and verified.	the thernal integrity of the ice condenser and the success of the cooldown, and (3) actual ice loading activities. Proper operational logic and performance tests on the pumps, AHU, chillers, floor defrost heaters, expansion tank level controls, personnel and access doors, and various ice condenser associated alarms will be made. Successful cooldown, in terms of compartment and structural temperatures, shall be accomplished. Proper sealing of floor drains and condenser door performance will be verified. Ice quality and inventory will be checked. Acceptance criteria for this test will be that the ice condenser system satisfies the requirements given in FSAR section 6.5.
W-12.2A	Annunicator Equipment Checkout	The tentative transfer of all the affected equipment from CONST to P PROD has been completed. Installation and required installation inspections, integrity testins, and cleaning and flushing activities of all associated equipment has been completed. All systems required to support operation and testing have either been preoperationally tested or cleared under an IOR. Electrical power supplies have been energized.	Proper operation of windows, reflash, acknowledge/reset, audible alarm, and test switches for all annunciator points and monitor lights will be verified. Acceptance criteria for this test will be that the aforementioned devices operate as designed and within specifications.
W-12.2B	Annunciator Equipment Checkout	The tentative transfer of all the affected equipment from CONST to P PROD has been completed. Installation and required installation inspections and integrity testing of all	Power supplies and inverters will be tested to determine if design criteria requirements have been met. Verification that each annunciator field contact being tested will light the proper annunciator window

TABLE 14.1-1 (Sheet 42)

LIST OF PREOPERATIONAL TESTS

Test No.	Title of Test	Test Prerequisites	Test Objectives Summary of Testing and Acceptance Criteria
		associated equipment have been completed. All systems required to support operation and testing have either been preoperationally tested or cleared under an IOR. Electrical power supplies have been energized.	and that the windows have proper engravings will be made. Acceptance criteria for this test will be that the aforementioned objectives have been satisfactorily met.
W-15.0	*Reactor Internals Vibration Monitoring	The tentative transfer of all the affected equipment from CONST to P PROD has been completed. Installation and required installation inspections and integrity testing of all associated equipment have been completed.	A detailed description of the vibration monitoring to be conducted on the upper internals package of the Sequoyah Unit 1 Plant is contained in Westinghouse Electric Corporation Topical Report WCAP 8516-P, "UHI Plant Internals Vibration Measurement Program & Pre & Post Hot Functional Examination," dated March 1975.
TVA-1	Shield Building Inleakage Tests, Emergency Treatment System Functional Tests	The tentative transfer of all the affected equipment from CONST to P PROD has been completed. Installation and required installation inspection, integrity testing, and cleaning and flushing activities have been completed in accordance with design and testing specifications. All components and equipment required to support operation and testing have either been preoperationally tested or cleared under an initial operation release (IOR). The containment building, shield building, and the Emergency Gas Treatment System (EGTS) are operable in preparation for testing. Penetrations are fully installed and operable. Containment vessel is isolated for testing. Power and control circuitry for the EGTS are operable and associated instrumentation is calibrated and available for	The test demonstrates that the shield building and the Emergency Gas Treatment System are capable of restricting LOCA generated activity releases to or below the limits specified in 10CFR100. The following test will be performed to demonstrate fulfillment of system requirements: 1) Determination of shield building inleakage at 0.5 inches and 5.0 inches water negative pressure levels. 2) Startup tests of annulus vacuum control subsystem, verification of automatic switchover to backup train for component failure, and verification of rated flow rates and vacuum level. 3) Startup and isolation of air cleanup subsystem, verification of automatic switchover to backup train for component failure, and

TABLE 14.1-1 (Sheet 43)

LIST OF PREOPERATIONAL TESTS

Test No.	Title of Test	Test Prerequisites	Test Objectives Summary of Testing and Acceptance Criteria
		service. Electrical power supplies are energized and associated equipment is available for service.	verification of subsystem flow rates, vacuum level, and filter cooling capacity. 4) Leak tightness and efficiency tests of the HEPA and charcoal filter banks. 5) Verification tests of relative humidity heater performance. 6) Verification tests of system instrumentation, controls, alarms, and interlocks. Acceptance Criteria: Shield building inleakage will be deemed acceptable if it does not exceed the limits specified in section 6.2.1.3.1 of the FSAR. The emergency gas treatment system performance will be deemed acceptable if the system functionally operates in accordance with section 6.2.3.2.2 of the FSAR.
TVA-2A	Containment Vessel Pressure and Leak Test - Integrated Leak Rate Test	The tentative transfer of all the affected equipment from CONST to P PROD has been completed. The containment building is in operational status. All penetrations have been fully installed and are operational. Upper and lower compartment air handling units are operational, and service air and portable air compressors are available. Special test instrumentation has been installed and calibrated. Operability of all isolation valves has been demonstrated before testing. All test connections and	To assure that leakage of the primary reactor containment and associated system is within allowable leakage rate limits prior to initial reactor operation and to establish the maximum allowable leakage rate for all future reduced pressure tests performed on the unit during the service life of the primary reactor containment and associated systems. A Type A reduced pressure test at containment pressure between 6.0 and 6.75 psig will demonstrate that the integrated leakage rate satisfies the acceptance criteria given in FSAR section 6.2.1.4.1 part 1. The reduced pressure and the

TABLE 14.1-1 (Sheet 44)

LIST OF PREOPERATIONAL TESTS

Test No.	Title of Test	Test Prerequisites	Test Objectives Summary of Testing and Acceptance Criteria
		vents are available on systems for testing.	peak pressure test, in that order, shall each be at least 24 hours in duration. For each type A test, a verification test shall be performed to demonstrate the validity of the measurements. The test shall be deemed acceptable if verification test data demonstrate an agreement within plus or minus 25 percent of the type A test data. The "absolute pressure temperature method" will be used.
TVA-2B	Containment Vessel Pressure and Leak Test - Testable Penetrations	The tentative transfer of all the affected equipment from CONST to P PROD has been completed. All construction prerequisites necessary for the testing of testable penetrations are complete. All temporary features associated with the integrity of testable penetrations have been cleared.	To ensure that the leakage from the testable electrical penetrations with resilient seals is within the allowable limits for unit startup. Electrical penetration leakage will be deemed acceptable upon demonstration that the requirements given in FSAR section 6.2.1.4.1 part 2 have been met.
TVA-2C	Containment Vessel Pressure and Leak Test - Containment Isolation Valve Rate Test	The tentative transfer of all the affected equipment from CONST to P PROD has been completed. Control quality air and electrical power are available to those isolation valves which require such sources. All temporary features associated with the integrity of testable isolation valves have been cleared. All construction prerequisites necessary for the testing of containment isolation valves are complete.	This test shall ensure that the leakage rate of the containment isolation valves are within the allowable limits for plant startup. Containment isolation valve leakage will be deemed acceptable if the requirements given in FSAR section 6.2.1.4.1 part 3 are satisfied.
TVA-3	Airlock Leakage and Operational Test	The tentative transfer of all the affected equipment from CONST to P PROD has been completed. Installation and required installation inspections, integrity	This test will demonstrate the functional capability and leaktightness of the personnel airlocks. Specifically, it will be demonstrated that:

TABLE 14.1-1 (Sheet 45)

LIST OF PREOPERATIONAL TESTS

Test No.	Title of Test	Test Prerequisites	Test Objectives Summary of Testing and Acceptance Criteria
		testing, and cleaning activities have been completed in accordance with design and testing specifications. Overpressure tests by vendor on personnel locks and bare-blanked containment vessel have been completed. The permanent communications system between inside of the lock and outside must be installed. Clean, dry compressed air is available. Permanently installed instrumentation has been checked and calibrated. Special test instruments are available and have been calibrated.	1) Communications system from inside the lock to the outside is operable according to design. 2) Mechanical door interlock system functions properly per design. 3) Limit switches on doors for operating remote indicator lights are operable per design. 4) With airlock pressurized to between 12.0 and 13.5 psig, the air-leakage rate does not exceed 0.1 percent per hour by weight of air. 5) With spaces between double 0-ring door seals pressurized to between 12.0 and 13.5 psig, the total leakage rate does not exceed 0.6 cubit foot per hour at 12.0 psig. Tests for each door-seal volume will continue for a minimum of 15 minutes. This test will cover only the operability and leaktightness of the doors and door seals. Leaktightness of the seal between the lock and the shield building will be tested in preoperational test "Shield Bldg. Inleakage Rate Tests Emergency Gas Treatment System Functional Tests." Leaktightness of any electrical penetrations through the lock will be tested in preoperational test "Containment Vessel Pressure and Leak Test."
TVA-4	Upper Containment Ventilation System	The tentative transfer of all the affected equipment from CONST to P PROD has been completed. All systems required	Each cooling unit will be tested separately to verify individual capacity. The test will demonstrate the fan air flow to

TABLE 14.1-1 (Sheet 46)

LIST OF PREOPERATIONAL TESTS

Test No.	Title of Test	Test Prerequisites	Test Objectives Summary of Testing and Acceptance Criteria
		to support operation and testing of the UCV system have either been preoperationally tested or cleared under an IOR. Cleaning, flushing, and hydrostatic testing of Cooling Coils and Piping System shall have been completed. Construction testing of cooling coil fan operation, air flow, and control circuitry shall have been completed. Instrumentation and claims have been checked, tested, and calibrated. Essential raw cooling water is available to the UCV system. Control quality air and electrical power is available to all components requiring such sources.	be not less than 16,000 cfm and water flow to be not less than 23 gpm. Test will also confirm the automatic start of standby unit upon loss of any of three operating units. System performance will be deemed acceptable when the requirements given in FSAR section 9.4.8.2.3 have been satisfied.
TVA-5	Lower Containment Ventilation System	The tentative transfer of all the affected equipment from CONST to P PROD has been completed. All systems required to support operation and testing of the LCV system have either been preoperationally tested or cleared under an IOR. Cleaning, flushing, and hydrostatic testing of Cooling Coils and Piping System have been completed. Construction testing of cooling coil fan operation, air flow, and control circuits have been completed. Instrumentation and alarms have been checked, tested, and calibrated. Essential raw cooling water is available to the lower containment vent system. Control quality air and electrical power are available to all components requiring such sources.	This test shall verify adequate operation of the Lower Containment Cooling System including fans, air distribution duct system instrumentation, and controls. Each cooling unit will be tested separately to verify adequate air and water flow rates. Confirmation that the fan air flow to be approximately 65,000 cfm and water flow to be not less than 200 gpm and automatic start of the standby unit upon loss of any of the three operating units shall be made. Acceptance criteria will be satisfied when the system requirements given in FSAR section 9.4.8.2.1 have been met.

TABLE 14.1-1 (Sheet 47)

LIST OF PREOPERATIONAL TESTS

Test No.	Title of Test	Test Prerequisites	Test Objectives Summary of Testing and Acceptance Criteria
TVA-6	Air Return Fans (Including Divider Barrier and Ice Condenser Doors)	The tentative transfer of all the affected equipment from CONST to P PROD has been completed. Installation and required installation inspection, integrity testing, and cleaning of all associated equipment have been completed in accordance with design and testing specifications. All components and equipment required to support operation and testing of the air return fans have either been preoperationally tested or cleared under an IOR. Electrical power and control air is available to all components requiring such sources. Construction testing on fans, motors, backdraft dampers, and inlet registers must be completed. The ice condenser is not loaded but the inlet, intermediate deck, and top-deck doors must be operational. The divider deck and all hatches must be sealed. The pool gate and CRDM missile shield must be in place. It must be confirmed that each blowout panel in instrument room and upper reactor cavity are free to operate. The containment vessel personnel airlocks and equipment and escape hatches must be closed. Lower compartment access plug must be properly installed.	This test will verify that adequate flow rates can be achieved by operation of any combination of air-return fans. Specifically this test consists of 1) Confirming ability of each air return fan to move air from the upper to lower compartment at a minimum flow of 40,000 cfm; 2) Verifying operability of the backdraft dampers and their indicating light; 3) "Demonstrates the capability to cause the ice condenser lower inlet doors to open by starting each air return fan or by other approved methods." 4) Measuring fan motor power requirements; 5) Verifying the proper operation of the control circuits, monitors, and alarms for each air return fan; 6) Adjusting the air flow to give the required minimum flow at each inlet dampers. System performance will be deemed acceptable when the design requirements given in FSAR section 6.6.2 have been met.
TVA-7	Control Rod Drive Mechanism Cooling System	The tentative transfer of all the affected equipment from CONST to P PROD has been completed. All systems required to support operation and testing of the CRDM cooling units have either been preoperation-	Each cooling unit will be tested separately to verify adequate air flow rates. The test will demonstrate the fan air flow to be not less than 31,250 cfm. The automatic start of the standby cooling

TABLE 14.1-1 (Sheet 48)

LIST OF PREOPERATIONAL TESTS

Test No.	Title of Test	Test Prerequisites	Test Objectives Summary of Testing and Acceptance Criteria
		ally tested or cleared under an IOR. Essential raw cooling water system instrument air system, control air system, lower compartment cooling units, and electrical power supplies are in service as required. Reactor coolant pump hatches, lower compartment access plug, pool gate, CRDM shield, and any other access hatch separating upper compartment from lower compartments are properly closed. Instrumentation and alarms have been checked, tested, and calibrated. Cleaning, flushing, and hydrostatic testing of cooling coils and piping systems is completed. Construction testing of fans, dampers, and control circuits must be completed.	unit in each pair of coolers upon the loss of the operating unit in that pair will be tested. Tests will also confirm the capability to utilize the standby unit of either or both pairs of coolers when lower compartment temperature exceeds 120°F. System performance will be deemed acceptable when the design requirements given in FSAR section 9.4.8.2.2 have been met.
TVA-8	Post LOCA Hydrogen Recombiner Test	The tentative transfer of all the affected equipment from CONST to P PROD has been completed. Installation tion and required installation inspections, integrity testing, and cleaning activities of all associated equipment have been completed in accordance with design and testing specifications. Containment ventilation system must be operational. Instrumentation and alarms have been checked, tested, and calibrated. Electrical power supplies have been energized and power is available to all components requiring such sources.	Operation of each recombiner at design flow rate and temperature will be demonstrated. Testing will include: 1) Preliminiary check of temperature readout instruments. 2) Heatup test will consist of operating each recombiner unit for 5 hours at power input of 48 kW. If outlet temperature is not 1200°F ± 25°F, the power will be adjusted to bring temperature within this range. Acceptance criteria will be met if final power settings is less than 52 kW with a recombiner outlet temperature of 1200°F± 25°F for containment temperatures above 68°F.

TABLE 14.1-1 (Sheet 49)

LIST OF PREOPERATIONAL TESTS

Test No.	Title of Test	Test Prerequisites	Test Objectives Summary of Testing and Acceptance Criteria
			3) An airflow test will be run using special Westinghouse equipment and measuring air-flow with a velometer. Actual hydrogen recombination will not be included in this test as it has been shown by Westinghouse in proof-of-principle tests that hydrogen and oxygen will combine at a temperature range of 1150 to 1400°F without producing a flame. All testing will be done at atmospheric pressure. Hydrogen recombiner performance will be deemed acceptable if the average airflow is greater than 100 SCFM, as given in FSAR section 6.2.5.4.
TVA-9A	Auxiliary Building Gas Treatment Systems and Access Control System	The tentative transfer of all the affected equipment from CONST to P PROD has been completed. Installa-tion of all equipment associated with this system has been completed. Required installation inspections, integrity testing, and cleaning activities have been completed. All instru-mentation and annunciators have been installed, tested, and calibrated. All systems required to support the ABGTS and ACS operations have either been preoperationally tested or cleared under an IOR for operation. Ductwork has been cleaned to remove all debris that could puncture filters, load the filters with dust, or poison the charocoal beds. Electrical power is available to components as required. Construction testing and	This test shall verify the capability of the Auxiliary Building Gas Treatment System to function properly during accident conditions to which it was designed. In particular verification of the following shall be made: (1) startup and control of the system, consid-ering a single operation com-ponent failure, (2) the capa-bility to reach and maintain the required negative pressure within the Auxiliary Building Secondary Containment Enclosure (ABSCE), and (3) the efficiency and proper operation of the components and instrumentation in the air cleanup unit. The Access Control System to be tested consists of all A, B, and C safety related doors that are contained within or are part of the ABSCE. This part of the tested related to the ACS will verify proper operation of locks, latches, and alarm annunciators.

TABLE 14.1-1 (Sheet 50)

LIST OF PREOPERATIONAL TESTS

Test No.	Title of Test	Test Prerequisites	Test Objectives Summary of Testing and Acceptance Criteria
		balancing of air-flow rates for the Gas Treatment System have been completed.	Acceptance criteria will be met for the ABGTS upon demonstration that the requirements given in the FSAR sections 6.2.3.3.3 and 6.2.3.4.3 have been satisfied. The access control system performance will be deemed acceptable if latches, alarms, and interlocks function as shown on the appropriate TVA schematic diagram.
TVA-9B	Reactor Building Purge System	The tentative transfer of all the affected equipment from CONST to P PROD has been completed. Installation of all equipment associated with the RBP system has been completed and functionally tested. Electrical power and control quality air are available to those system components which require such. Ductwork associated with the containment purge system has been cleaned to remove foreign debris that might puncture the filters, dust that could load the filters, or material that might poison the charcoal. All instrumentation and alarms have been checked, tested, and calibrated. All systems required to support the RBPS operation have either been preoperationally tested or cleared under an IOR for operation.	The objective of this test is to verify adequate performance of the containment purge system including fans, air cleanup filter assemblies, isolation valves, air distribution duct systems, instrumentation, controls, and alarms. Airflow rates for the incore instrument room purge system and the reactor building purge system will be verified. Also the efficiencies for the HEPA and charcoal filters will be verified. Acceptance criteria for the RBPS will be satisfied upon demonstration that the requirements given in FSAR section 9.4.7.2 have been met.
TVA-9C	Auxiliary Building Heating, Ventilating, and Cooling System	The tenative transfer of all the affected equipment from CONST to P PROD has been completed. Installation of all equipment associated with the AB HVAC system has been functionally tested. Ductwork has been cleaned to remove all debris that could puncture filters, load the filters with dust, or poison the	The auxiliary building heating, ventilating, and cooling system to be tested consists of fans, water chillers, refrigerant compressors, condensers, water circulating pumps, cooling-heating coils, filters, heaters, air-conditioning units, aircooling units, air cleanup assemblies, dampers, ductwork, and piping systems, instruments, controls, and alarms.

TABLE 14.1-1 (Sheet 51)

LIST OF PREOPERATIONAL TESTS

Test No.	Title of Test	Test Prerequisites	Test Objectives Summary of Testing and Acceptance Criteria
		charcoal bed. Electrical power and control air are available to components as required. Construction testing and balancing of airflow rates for the HVAC system have been completed. All instrumentation and annunciators shall be installed, tested and calibrated. Essential Raw Cooling Water or a temporary water supply shall be available to supply water to cooling units and shutdown board room air-conditioning units.	This test will verify the capability of the auxiliary building heating, ventilating, and cooling subsystems to provide design flow rates to each designated section of the building and to maintain each section of the building at design pressure. Each subsystem's components will be verified to show proper operation during normal and abnormal conditions. 1) Auxiliary Building General Ventilating System. 2) Shutdown Board Rooms Air-Conditioning System. 3) Auxiliary Board and Battery Rooms Ventilating Systems. 4) Engineered Safety Feature Equipment Emergency Cooling System. 5) Miscellaneous systems such as radio-chemical laboratory and hot instrument shop ventilation systems. Acceptance criteria for the AB HVAC systems will be satisfied upon demonstration that the requirements in FSAR section 9.4.2 have been met.
TVA-10	Control Building Heating, Ventilating, and Air-Conditioning Systems	The tentative transfer of all the affected equipment from CONST to P PROD has been completed. Construction testing and balancing of air flow rates for each system is complete. Control air is available to operate damper motors and other pneumatic devices. Lubrication of fans and	Test objective is to verify the adequate performance of all systems in maintaining a controlled acceptable environments within the building for protection of mechanical and electrical equipment and for safety and comfort of operating personnel. A controlled, safe environment will also be assured for continuous occupancy of the main control room

TABLE 14.1-1 (Sheet 52)

LIST OF PREOPERATIONAL TESTS

Test No.	Title of Test	Test Prerequisites	Test Objectives Summary of Testing and Acceptance Criteria
		motors is assured and all instrumentation have been installed, calibrated, and are operational. Essential raw cooling water is available to each Air-Conditioning System condensing unit. Annunciators have been installed, tested, and calibrated.	during any accident or off normal condition. Complete isolation will be demonstrated. The following capabilities will be demonstrated or confirmed: 1) Building pressurizing fans, main and auxiliary, operate automatically for normal operation and isolation; 2) Control building can be maintained at 1/8-inch positive static pressure relative to the outside environment; 3) Control room indicating lights operate properly; 4) Flow switches operate to automatically start redundant fans; 5) All motor-operated dampers operate automatically and properly for normal and emergency conditions; and 6) Refrigerant compressors, air handling units, heaters, thermostat controls, and humidifiers operate properly. In-place leak rate testing of the Charcoal and HEPA Supply System filters will demonstrate adequacy of filter installation. Operate of the charcoal heater for each filter assembly and its associated controls will be verified. The CBHVAC system performance will be deemed acceptable upon demonstration that the requirements given in FSAR section 9.4.1.2 have been satisfied.

TABLE 14.1-1 (Sheet 53)

LIST OF PREOPERATIONAL TESTS

Test No.	Title of Test	Test Prerequisites	Test Objectives Summary of Testing and Acceptance Criteria
TVA-11A	Plant Communications System - Emergency Sound Powered Telephone System	The tentative transfer of all the affected equipment from CONST to P PROD has been completed. Installation of all equipment associated with the system is complete. All required installation inspection activities have been completed.	The Emergency Sound-Powered Telephone System provides a very reliable source of communication that requires no external power supply to operate. This test will demonstrate the operability of the primary shutdown control center,health physics-electrical control rooms, and diesel building-control room communications systems. Intelligible reception and transmission of voice communications at all stations required will be verified. Particular emphasis will be placed on showing that communications at all stations required for the initial fuel loading are functioning properly. Acceptance criteria for the emergency sound-powered telephone system will be that the requirements given in FSAR section 9.5.2 will be satisfied.
TVA-11B	Plant Cummunications Systems - Evacuation Signal	The tentative transfer of all the affected equipment from CONST to P PROD has been completed. Installation and required installation inspections of all equipment associated with this system have been completed. Electrical power is available to all equipment requiring such.	This test is designed to verify the proper operation and adequacy of the Evacuation Alarm System and to demonstrate that the evacuation signal can be heard in all designated areas of the plant. Acceptance criteria for the evacuation signal will be that the requirements given in FSAR section 9.5.2 will be satisfied.
TVA-12A	TVA Offsite Power System (161-kV Switchyard)	The tentative transfer of all the affected equipment from CONST to P PROD has been completed. Installation and required installation inspections of all equipment associated with this system has been completed. Construction	This test will verify that two offsite power sources would be continuously available for immediate delivery of offsite power from the transmission network of the standby onsite power system. In the event of an electrical fault in the switchyard or on the two sel-

TABLE 14.1-1 (Sheet 54)

LIST OF PREOPERATIONAL TESTS

Test No.	Title of Test	Test Prerequisites	Test Objectives Summary of Testing and Acceptance Criteria
		wiring and functional checks on the 161-kV switchyard, relay settings, and electrical tests have been completed by the Division of Power System Operations (DPSO), AC and DC control power is available and in service as required.	ected offsite power would still be available thru the two independent onsite power circuits. Acceptance criteria for the performance of the 161-kV switchyard will be met upon demonstration that the requirements given in FSAR section 8.2.1.2 have been satisfied.
TVA-12B	TVA Offsite Power System (Start Boards)	The tentative transfer of all the affected equipment from CONST to P PROD has been completed. Construction tests have been performed on the systems and associated equipment. Normal and alternate control power is available from the 25-Volt DC system. Relay settings and electrical tests have been completed. Functional tests on the start bus differential protective relays and common board feeder breakers have been completed. The start bus alarm system is installed and operational.	This test is to demonstrate that the interlocks and transfer scheme for the 6.9-kV start boards function as design signed. Acceptance criteria for the start board performance will be met upon demonstration that the requirements given in FSAR section 8.2.1.3 have been satisfied.
TVA-12C	TVA Offsite Power System (Unit Boards)	The tentative transfer of all the affected equipment from CONST to P PROD has been completed. Installation and required installation inspections and integrity testing activities of all equipment associated with this system have been completed. Instrumentation and alarms have been installed, tested, and calibrated. Relay settings and electrical tests on the 6.9-kV unit boards have been completed by DPSO. Electrical power supplies have been energized and the associated equipment is available for service.	This test will be performed on the interlocks and automatic transfer scheme of the 6.9kV unit boards to verify proper oreation of air circuit breakers, transfer switches, interlocks, relays, and alarms. Tests will be conducted by simulating phase-to-phase and phase-to-ground faults and power circuits breaker failure. Unit board performance will be deemed acceptable upon demonstration that the requirements given in FSAR section 8.2.1.3 have been satisfied.
TVA-13A	Onsite AC Distribution System	The tentative transfer of all the affected equipment from CONST to P PROD has been	This test verifies that the interlocks and mode selector switch allow or prevent, as

TABLE 14.1-1 (Sheet 55)

LIST OF PREOPERATIONAL TESTS

Test No.	Title of Test	Test Prerequisites	Test Objectives Summary of Testing and Acceptance Criteria
		completed. Installation of all components and equipment associated with this system and required installation inspections have been completed. All construction checks and functional tests of circuit breakers, relays, and control circuits have been completed. All systems required to support operation and testing of this system have either been preoperationally tested or cleared under an IOR. Electrical power supplies have been energized and the necessary associated equipment is available for service. The diesel generator sets and supporting auxiliaries are operational.	required, the operation of the feeder, and diesel generator breakers on the 6.9-kV shutdown board under manual or automatic It also demonstrates that the separation of control features between the normal and auxiliary controls will function in accordance with design criteria and that the board protective devices operate properly. Acceptance criteria will be that the breakers perform under manual and automatic conditions as described in FSAR Subsection 8.3.1.1.
TVA-13B1	TVA Onsite AC Distribution System	The tentative transfer of all the affected equipment from CONST to P PROD has been completed. Installation and required installation inspection activities of all equipment associated with this system have been completed in accordance with test and design specifications. All components and equipment required for system operaiton and/or testing have been preoperationally tested or cleared under an IOR.	This test shall verify that the diesel generator loading logic relays will start the diesel generator, connect the diesel to the shutdown board bus, and disconnect and connect the required loads in sequence for the condition of loss of preferred power. This test shall also verify, by the absence of voltage to the power trains not under test, that each power train is independent of the other. Acceptance criteria shall be met if the required loads are tripped and are sequentially applied to the board in the correctly timed sequence per FSAR section 8.3.1.1. Power train independent will be deemed acceptable if voltage on power trains not under test remain deenergized throughout testing of the train under test.

TABLE 14.1-1 (Sheet 56)

LIST OF PREOPERATIONAL TESTS

Test No.	Title of Test	Test Prerequisites	Test Objectives Summary of Testing and Acceptance Criteria
TVA-13B2	Onsite AC Distribution System	The tentative transfer of all the affected equipment from CONST to P PROD has been completed. Installation and required installation inspection activities have been completed in accordance with design and test specifications. All components and equipment required to support operation and/or testing have been preoperationally tested or cleared under an IOR. Control power from the Vital Barrety System must be available for the operation of control, protective, and instrumentation circuits. The diesel generator sets and supporting auxiliaries shall be operational.	This test shall confirm that the diesel loading logic relays will start the diesel generator connect the diesel generator to the shutdown board bus, and disconnect and connect the required loads for the condition for the condition of loss of preferred power followed by or concurrent with an accident. Also, system response time to a safety injection, and a safety injection concurrent with a blackout condition, will be verified. Acceptable system performance will be demonstrated when the requirements given in FSAR section 8.3.1.1 have been satisified.
	NOTE: Additional diesel generator testing was performed via STI-63, -77, -78, -110, and -111 during 1988 unit 2 restart program.		
TVA-13C	Onsite AC Distribution System (Diesel Generator Qualification Test)	The tentative transfer of all the affected equipment from CONST to P PROD has been completed. Installation and required inspection activities have been completed in accordance with design and testing specifications. The Diesel Generator Fuel Oil, Starting Air, Heating and Ventilating, and 125V Battery Systems have been preoperationally tested. The diesel generator sets and supporting auxiliaries shall be operational.	Qualification testing of the diesel generators will be conducted in three major parts. These tests shall demonstrate: 1) The diesel generators' capability to start, accelerate to rated speed and volt age, automatically tie to the shutdown board, and be loaded to at least 50 percent of nameplate rating 23 consecutive times without a failure, 2) The diesel generators' capability of carrying the continuous rating of 5,500 kVA for a time required to reach a equilibrium temperature plus 1 hour, 3) The diesel generators' capability of carrying the short time rating or 5,000 kVA for

TABLE 14.1-1 (Sheet 57)

LIST OF PREOPERATIONAL TESTS

Test No.	Title of Test	Test Prerequisites	Test Objectives Summary of Testing and Acceptance Criteria
			a period of 2 hours without exceeding manufacturer's design limits, 4) The diesel generators' capability to start and carry loads that are greater than the most severe load step change within the plant design loading sequence without experiencing instability resulting in generator voltage collapse or instability of the engine speed to recover. A load of at least 1,000 horse-power shall be used. Acceptance criteria will be met upon demonstration that the diesel generator set can start and accept 50 percent load, carry the continuous load of 5,550 kVA, and the 2 hour load of 5,000 kVA for the designated period of time without exceeding the manufacturer's design limits as specified in FSAR section 8.3.1.1.
TVA-13D	Onsite AC Distribution System (Blackout with Diesel Generator in Test Mode)	The tentative transfer of all affected equipment from CONST to P PROD has been completed. Installation and required installation inspection activities have been completed in accordance with design and testing specifications. The Diesel Generator Fuel Oil, Starting Air, Heating and Ventilation, and 125V Battery Systems have been preoperationally tested. The diesel generator sets and supporting auxiliar- shall be operational.	This test will verify the capability of the diesel generator to supply emergency power within the required time while operating in the test mode. The test will demonstrate: 1) That the diesel generator overcurrent relays will trip the diesel generator 6.9 kV ACB only when the diesel generator is in the test mode (i.e., parallel with offsite power); 2) That if the diesel generator receives an emergency start signal while in the test mode, the manual control

TABLE 14.1-1 (Sheet 58)

LIST OF PREOPERATIONAL TESTS

Test No.	Title of Test	Test Prerequisites	Test Objectives Summary of Testing and Acceptance Criteria
			lockout will not trip until the diesel generator is located from offsite power; 3) That when the diesel generator is in the test mode and a blackout occurs, the blackout signal will automatically override the diesel generator manual controls and establish the appropriate electrical alignment. Acceptance criteria will be met if the above objectives are satisfactorily completed.
TVA-14A	Diesel Generators and Supporting Auxiliaries (Diesel Generator Fuel Oil System)	The tentative transfer of all the affected equipment from CONST to P PROD has been completed. Installation of all equipment associated with this system has been completed in accordance with design specifications. Required installation inspections, integrity testing activities, and cleaning and flushing activities, have been completed on fuel storage tanks, and fuel oil piping. All pumps, valves, and electrical supplies have been functionally tested. Instrumentation and alarms have been checked, tested, and calibrated. The diesel generator building CO_2 Fire Protection System must be operable before performing tests on the Fuel Oil System. Electrical power supplies have been energized and the associated for service. The required amount of No. 2 diesel fuel has been installed in the proper tanks.	This test will verify the system's ability to transfer fuel oil from the railcar unloading station to fill the yard storage tanks and transfer fuel oil in all the difference operational modes. This test will also verify the systems associated interlocks, controls, and annunciations. Acceptance criteria for the Diesel Generator Fuel Oil System shall be met upon demonstration that the requirements given in FSAR section 9.5.4.2 have been satisfied.
TVA-14B	Diesel Generators and Supporting	The tentative transfer of all the affected equipment from CONST to P PROD has	This test will demonstrate the ability of the air start system controls to maintain the air

TABLE 14.1-1 (Sheet 59)

LIST OF PREOPERATIONAL TESTS

Test No.	Title of Test	Test Prerequisites	Test Objectives Summary of Testing and Acceptance Criteria
	Auxiliaries (Diesel Generator Starting Air System)	been completed. Installation of all equipment associated with this system has been completed. Required installation inspections, integrity testing activities, and cleaning and flushing activities have been completed. Electrical power supplies have been energized and associated equipment is available for service.	pressure in the air receiver tanks between 250 psig to 300 psig and provide 200 psig air to the air start motors through pressure reducing valves. This vest will also demonstrate the proper operation of the air start system interlocks and alarms. The ability of the air receivers to provide a sufficient quality of air to allow five diesel starts will be verified as well as the ability to recharge the receivers to 300 psig within 30 minutes.
	NOTE: Additional testing of diesel generator auxiliary systems was performed via STI-72, -73, -74 and -75 during 1988 unit 2 restart program.		
			Acceptance criteria will be met upon demonstration that the air start system performs in accordance with the requirements of section 9.5.6 of the FSAR.
TVA-14C	Diesel Generators and Supporting Auxiliaries (Diesel Generator Building Heating and Ventilation System)	The tentative transfer of all the affected equipment from CONST to P PROD has been completed. Installation of all equipment associated with this system has been completed in accordance with design specifications. Required installation inspection, integrity testing activities, and cleaning and flushing activities have been completed. Instrumentation and alarms have been checked, tested, and calibrated. Electrical power supplies have been energized and the associated equipment is available for service.	This test will verify that the Diesel Generator Building Heating and Ventilation System maintains an acceptable environment for the protection of the diesel generator equipment. Verification of the proper operation of the control circuits for the air intake dampers and various exhaust fans shall be demonstrated. Acceptance criteria for the DGH&V system will be demonstrated when the design requirements given in FSAR section 9.4.5 have been satisfied.
TVA-14D	Diesel Generators and Supporting Auxiliaries (125-V Control	The tentative transfer of all the affected equipment from CONST to P PROD has been completed. Installation and required installa-	This test is divided into three sections or phases which are performed on each diesel generator set. Phase 1 will be an acceptance test to determine

TABLE 14.1-1 (Sheet 60)

LIST OF PREOPERATIONAL TESTS

Test No.	Title of Test	Test Prerequisites	Test Objectives Summary of Testing and Acceptance Criteria
	and Field Flashing Batteries)	tion inspections of all equipment associated with this system have been completed in accordance with design and testing specifications. All instrumentation and annunciators have been installed, tested, and calibrated.	that the battery meets manufacturer's guaranteed rating. Phase 2 will be a service test to determine if the battery is sized properly to supply the actual system loads. Phase 3 will demonstrate that the charger will recharge the battery to its nominally full charged state from the 30-minute design discharge while supplying normal loads, within a 12-hour period. Acceptance criteria will be satisfied if the batteries meet the above objectives.
TVA-14E	Diesel Generators and Supporting (Diesel Generator Functional Tests)	The tentative transfer of all the affected equipment from CONST to P PROD has been completed. Installation of all equipment associated with this system has been completed in accordance with design specifications. Required installation inspections, integrity testing activities, and cleaning and flushing activities, have been completed. Instrumentation and alarms have been checked, tested, and calibrated. The diesel generator building CO_2 Fire Protection System, Essential Raw Cooling Water System, and AC Distribution System have been preoperationally tested and are available. Preoperational tests 14A-D have been performed.	This test will demonstrate the proper operation of the controls, interlocks, and alarms associated with the diesel generators and the supporting auxiliaries. Also the capability of the diesels to start and run for 24 hours, while loaded to 4,000-kW, without exceeding design specifications will be demonstrated. This test will be deemed acceptable if the diesel performance is in accordance with the manufacturer's testing that was performed on the diesels prior to shipment to TVA.
TVA-15	Vital 120V AC Power System	The tentative transfer of all the affected equipment from CONST to P PROD has been completed. All equipment and components required to support operation and testing have either been preoperationally tested or cleared under an IOR. Alarms have	The test will confirm the ability of the 120V AC Vital Power System to automatically switch between the 480V DC power sources while delivering and maximem demand load and maintaining output voltage within acceptable limits. While the system is loaded with an equivalent

TABLE 14.1-1 (Sheet 61)

LIST OF PREOPERATIONAL TESTS

Test No.	Title of Test	Test Prerequisites	Test Objectives Summary of Testing and Acceptance Criteria
		been installed, tested, and calibrated. Acceptance testing of the 120-Volt vital inverters has been completed. Electrical power supplies have been energized and associated equipment is available for service. Construction checks and tests of the system shall have been completed. Tests of the 125V DC system and the 480V AC supplies should be completed before this test.	maximum deman load, the 480V AC power source will be disconnected and the 125V DC supply to carry the load for at least 10 seconds. Acceptance criteria will be met for the vital 120-Volt AC Power System when the requirements given in FSAR section 8.3.2.1.1 have been demonstrated.
TVA-16A	Vital 125-V DC Power System	The tentative transfer of all the affected equipment from CONST to P PROD has been completed. Installation and required installation inspections of all equipment associated with this system have been completed in accordance with design and testing specifications. All equipment and components required to support this system during testing have either been preoperationally tested or cleared under an IOR. Required electrical power supplies have been energized and all associated equipment is available for service. Alarms have been installed and tested.	This test will demonstrate the capability of the four separate vital power systems to supply the 125-volt DC power requirements under the worst anticipated operating conditions. Each battery will be discharged for 2 hours, continued to be discharged to a minimum terminal voltage of 105 volts, and then recharged to establish the time required to return to a charged condition. Acceptance criteria for the Vital 125-Volt DC Power System will be met upon demonstration that the requirements given in FSAR section 8.3.2.1.1 have
TVA-16B	*Vital 125-V DC Power System (Measurement of Actual Loads)	The tentative transfer of all the affected equipment from CONST to P PROD has been completed. Installation and required installation inspection of all equipment associated with this system have been completed in accordance with design and testing specifications. All equipment and components required to support this system during testing have either been preoperaionally tested or cleared under an IOR. Required electrical	This test will demonstrate that the actual 125-VC DC system loads are below the design loads for the system. This will be accomplished by recording the majority of the actual system loads on the system during plant start-up. Loads that cannot be measured will be assumed to be equal to design loads. The loads on the 125V DC system will be deemed acceptable if the sum of all system loads,

TABLE 14.1-1 (Sheet 62)

LIST OF PREOPERATIONAL TESTS

Test No.	Title of Test	Test Prerequisites	Test Objectives Summary of Testing and Acceptance Criteria
		power supplies have been energized and all associated equipment is available for service.	including those that cannot be measured, is less than the system loading values given in Tables 8.3-23 of the FSAR.
TVA-17	Condenser Circulating Water System	The tentative transfer of all the affected equipment from CONST to P PROD has been completed. Installation and required installation inspections, integrity testing, and cleaning and flushing of all equipment associated with this system have been completed. All systems required to support operation and testing of the CCWS have either been preoperationally tested or cleared under an IOR. Electrical power supplies have been energized. Condensers, intake tunnels, and discharge tunnels have been filled with water and the disharge structure stoplogs have been removed. The vacuum priming and cooling water system must be complete and operable. Monitor which provide warning of flooding of the reactor, auxiliary, and turbine buildings must be operational.	The test verifies that the condenser circulating water (CCW) pumps can be shutdown immediately following a design basis accident (loss of downstream dam) to prevent the forebay pool from being pumped dry. Each CCW pump will be operated to verify correct functioning of pumps and systems. The pumps will be stopped and restarted manually. Both float manually. Both float level switches provided in each CCW pump pit designed to automatically stop the CCW pumps will be operated manually through elevation 668.0 to simulate the design basis accident. Acceptance criteria for the CCWS will be met upon demonstration that the requirements given in FSAR section 10.4.5.1 have been satisfied.
TVA-18A	Essential Raw Cooling Water System	The tentative transfer of all the affected equipment from CONST to P PROD has been completed. Installation and required installation inspections, integrity testing, and cleaning and flushing activities have been completed in accordance with design and testing specifications. Instrumentation and alarms have been checked, tested and calibrated. All components and equipment required to support operation and/or testing of the ERCW system have either been preoperationally tested or are cleared under an IOR.	This test shall verify the operability of the Essential Raw Cooling Water (ERCW) System including components, instrumentation and control equipment, and applicable alarms and setpoints. Only the ERCW pumps, strainers, main headers for both units, the component cooling heat exchangers, and associated valves will be included in this test. Minimum header flow requirements must be met for both one and two pump operation and proper control of the components will also be checked.

TABLE 14.1-1 (Sheet 63)

LIST OF PREOPERATIONAL TESTS

Test No.	Title of Test	Test Prerequisites	Test Objectives Summary of Testing and Acceptance Criteria
		The process computer has electrical power and is available for service to monitor temperature sensors, which have been connected. All electrical supplies have been energized and the associated equipment is available for service.	Acceptance criteria will be met for the ERCW system when the system requirements stated in FSAR section 9.2.2.2 have been satisfied.
TVA-18B	Essential Raw Cooling Water System-Components	The tentative transfer of all the affected equipment from CONST to P PROD has been completed. Installation and required installation inspections, integrity testing, and cleaning and flushing activities of all equipment associated with this system have been completed in accordance with design and testing specifications. All equipment and components required to support operation and/or testing of the ERCW system has either been preoperationally tested or cleared under an IOR. Electrical power and control air is available to all components requiring such. Instrumentation and alarms have been installed, tested, and calibrated. The ERCW headers are pressurized and the system has been properly filled and vented.	This test shall verify the proper operation of the valves associated with the individual components in the ERCW system and check for flow through the coolers and heat exchangers served by ERCW. The system components are divided into groups, which will include all ERCW components, piping, and valves including the first isolation valves to other associated components to be tested separately. This test shall also verify proper operation of alarms and monitor lights for the associated ERCW equipment. Acceptance criteria for the ERCW system components will be met when the requirements given in FSAR section 9.2.2.2 have been satisfied.
TVA-18C	Essential Raw Cooling Water System - Flow Balance	The tentative transfer of all the affected equipment from CONST to P PROD has been completed. Installation and required installation inspections, integrity testing, and cleaning and flushing activities of all equipment associated with the ERCW system have been completed in accordance with design and testing specifications. All equipment and components re-	This test shall verify proper balancing of the ERCW system in the various modes which are most demanding of the system. One and two ERCW pump flows,as well as one auxiliary ERCW pump flow are attained for each train on ERCW headers and components. All components are checked for having sufficient water flow for all tested modes in which they are needed.

TABLE 14.1-1 (Sheet 64)

LIST OF PREOPERATIONAL TESTS

Test No.	Title of Test	Test Prerequisites	Test Objectives Summary of Testing and Acceptance Criteria
		quired to support the ERCW system have either been preoperationally tested or cleared under an IOR. Electrical power supplies have been energized and all associated equipment is available for service.	The ERCW System flow balance will be deemed acceptable when the requirements given in FSAR section 9.2.2.2 have been satisfied.
TVA-18D1	Essential Raw Cooling Water System - Pumping Station Functional Test	The tentative transfer of all the affected equipment from CONST to P PROD has been completed. Installation and required installation inspections, integrity testing, and cleaning and flushing activities have been completed in accordance with design and testing specifications. Instrumentation and alarms have been checked, tested and calibrated. All components and equipment required to support operation and/or testing of the ERCW System have either been preopera- tested or are cleared under an IOR. The process computer has electrical power and is available for service to monitor temperature sensors, which have been connected. All electrical supplies have been energized and the associated equipment is available for service.	This test shall verify operability of the essential raw cooling water system, including components, instrumentation & control equipment associated with the new pumping station. Testing includes operational performance of ERCW strainers, traveling screens and screen wash pumps, control and operation of system valves, and verification of instrumentation of alarm setpoints. Operational and response time testing of ERCW pumps Q-A, K-A, M-B and and response time testing of ERCW pumps Q-A, K-A, M-B and N-B is also included. Control logic for ERCW pumps has been previously tested in preoperational test TVA-18C, unit 1. Operational performance of ERCW pumps J-A, R-A, L-B and P-B will be tested in Preoperational test TVA-18D2. The system flow balance and steady state piping vibration will be performed in preoperational test TVA-18C, unit 2 after the new pumps are qualified. Acceptance criteria will be met for the ERCW system when the system when the system requirements stated in FSAR section 9.2.2.2 have been satisfied.

TABLE 14.1-1 (Sheet 65)

LIST OF PREOPERATIONAL TESTS

Test No.	Title of Test	Test Prerequisites	Test Objectives Summary of Testing and Acceptance Criteria
TVA-18D2	Essential Raw Cooling Water System - Pump Performance Test	The tentative transfer of all the affected equipment from CONST to P PROD has been completed. Installation and required installation inspections, integrity testing, and cleaning and flushing activities have been completed in accordance with design and testing specifications. Instrumentation and alarms have been checked, tested, and calibrated. All components and equipment required to support operation and/or testing of the ERCW system have either been preoperationally tested or are cleared under an IOR. The process computer has electrical power and is available for service to monitor temperature sensors, which have been connected. All electrical supplies have been energized and the associated equipment is available for service.	This test shall verify proper operation of ERCW Pumps J-A, R-A, L-B and P-B at the new pumping station. Testing including verification that pump performance meet design ratings at several flow rates, and verification that pump response times to safety injection signals are within design limits. Control for ERCW pumps has been previously tested in Preoperational Test TVA-18C, Unit 1. Operational performance of ERCW Pumps Q-A, K-A, M-B and N-B has been tested in Preoperational Test TVA-18D1. The system flow balance and steady state piping vibration testing will be performed in Preoperational Test TVA-18C, Unit 2 after the new pumps are qualified. Acceptance criteria will be met for the ERCW system when the system requirements stated in FSAR section 9.2.2.2 have been satisfied.
TVA-19	Auxiliary Essential Raw Cooling Water System	The tentative transfer of all the affected equipment from CONST to P PROD has been completed. All system required to support operation and testing of the AERCW system have either been preoperationally tested or cleared under an IOR. Control air and electrical power is available to all components requiring such. Heat tracing for the AERCW system is available for service, as required. Flushing and hydrostatic testing of system is complete. Construction testing of pumps, valves, and control circuits, and instrumentation and alarm calibration have been completed. Testing of the essen-	The test verifies the operability of the cooling towers and recirculation system of the essential raw cooling water system including components, instrumentation and control equipment, and applicable alarms and setpoints. Specifically, the test includes: 1) Manual and automatic operation of the auxiliary ERCW pumps, cooling tower makeup pump, traveling water screens, cooling tower fans and all motor and air operated valves from the control room and local panels. 2) Flow tests to demonstrate acceptable cooling water

TABLE 14.1-1 (Sheet 66)

LIST OF PREOPERATIONAL TESTS

Test No.	Title of Test	Test Prerequisites	Test Objectives Summary of Testing and Acceptance Criteria
		tial raw cooling water system should be completed before starting this test.	flow rates during various system modes of operation. AERCW system performance will be deemed acceptable if the requirements given in section 9.2.2 of the FSAR have been have been satisfied.
TVA-20A	Component Cooling System	The tentative transfer of all the affected equipment from CONST to P PROD has been completed. Installation and required installation inspection, integrity testing, and cleaning and flushing activities have been completed in accordance with design and testing specifications. Instrumentation and alarms have been installed, tested, and calibrated. All equipment and components required for operation and/or testing of the componentes cooling system (CCS) has either been preoperationally tested or cleared under an IOR. Electrical power supplies have been energized and control air is available to all components requiring such. Demineralized Water and Essential Raw Cooling Water Systems are available to supply water to all components requiring such.	This test will verify the proper operation of the CCS pumps, the Seal Leakage Return Unit (SLRU) pumps, and alarms, valves, and surge tanks. Pumps and valves will be tested in both automatic and manual modes. The CCS surge tank level alarms are also checked for proper actuation. Acceptance criteria for this portion of CCS test will be met upon demonstration that the system requirements given in FSAR section 9.2.1.2 have been satisfied.
		The tentative transfer of all the affected equipment from CONST to P PROD has been completed. Installation and required installation inspections, integrity testing, and cleaning and flushing activities of all equipment associated with the CCS have been completed in accordance with design and testing specifications. All components and equipment	The test will verify the proper operation of the CCS motor- and air-operated valves and the CCS Thermal Barrier Booster Pumps (TBBP). The reactor coolant pump thermal barrier containment isolation valves are checked for closure on a thermal barrier flow differential signal. The unit 1 equipment will be tested for receiving a minimum flow rate with the system set up in an

TABLE 14.1-1 (Sheet 67)

LIST OF PREOPERATIONAL TESTS

Test No.	Title of Test	Test Prerequisites	Test Objectives Summary of Testing and Acceptance Criteria
		required for operation and/or testing of this system have either been preoperationally tested or cleared under an IOR. Instrumentation and alarms have been checked, tested, and calibrated. Electrical power and control air are available to all components requiring such. Demineralized Water and Essential Raw Cooling Water Systems are available to provide water to the surge tanks, heat exchangers, pumps, and coolers.	actual operating mode. The pumps will then be tested for providing minimum flow in any operation mode. The unit 2 pumps also be tested to being able to supply the Unit 1 equipment in the initial shutdown mode. Minimum flow requirements for the Gas Stripper and Boric Acide Package B will also be verified. A heat balance shall be performed on the CCS heat exchangers. Acceptance criteria for this portion of CCS testing will be met when the requirements given in FSAR section 9.2.1.2 have been satisfied.
TVA-21A	Containment Spray System	The tentative transfer of all the affected equipment from CONST to P PROD has been completed. Installation and required installation inspections, integrity testing, and cleaning and flushing activities have been completed in accordance with design and testing specifications. System instrumentation has been installed and calibrated. An adequate source of clean, dry compressed air of clean, dry compressed air is available for testing of the containment spray and RHR spray nozzles. A final filter and dry/moisture separator have been installed just prior to air test connections.	This test shall verify that the nozzles for the Containment Spray and Residual Heat Removal System are not plugged and will pass air freely. This test will be deemed acceptable if all CSS and RHR nozzles are unobstructed for flow through them.
TVA-21B	Containment Spray System	The tentative transfer of all the affected equipment from CONST to P PROD has been completed. Installation inspections, integrity testing and cleaning and flushing activities have been completed in accordance	This test will demonstrate the capability of the CSS to perform as designed. This test includes the following: 1) Pumps will be operated at reduced flow through the minimum flow recirculation

TABLE 14.1-1 (Sheet 68)

LIST OF PREOPERATIONAL TESTS

Test No.	Title of Test	Test Prerequisites	Test Objectives Summary of Testing and Acceptance Criteria
		with design and testing specifications. The Essential Raw Cooling Water and Component Cooling Systems have either been preoperationally tested or cleared under an IOR. Instrumentation and alarms have been checked, tested, and calibrated. Electrical power supplies have been energized and associated equipment is available for service.	and essentially rated flow through the test line to the refueling water storage tank. Pump performance will be verified by comparing test values of developed head and flow with manufacturer's data. 2) Valve interlocks in pump suction lines between the containment sump and refueling water storage tank will be verified to be operable in accordance with the latest revision TVA schematic diagram. 3) Capability for manual operation of the system from both the main and auxiliary control rooms will be verified. All control room indications of system status will be checked. CSS performance will be deemed acceptable if the requirements given in section 6.2.2.2 of the FSAR have been satisfied.
TVA-22	Auxiliary Feedwater System	The tentative transfer of all the affected equipment from CONST to P PROD has been completed. All systems required to support operation and testing of the AFS have either been preoperationally tested or cleared under an IOR. Flushing, cleaning, and hydrostatic testing have been completed. Construction testing of system components and instrumentation testing of system components and instrumentation calibration have been completed. Condensate storage tank must be filled with makeup quality water	The tests will demonstrate the capability of the auxiliary feedwater system to perform designed, specifically the test includes: 1) Each of the electric motor-driven pumps and the steam turbine-driven pump are tested in both the minimum flow recirculation mode and at essentially rated flow conditions. Pump performance will be evaluated by comparing measured flow and and head data against manufacturer's data. Pumps will be tested for deliverance of rated flow within one minute following certain events,

TABLE 14.1-1 (Sheet 69)

LIST OF PREOPERATIONAL TESTS

Test No.	Title of Test	Test Prerequisites	Test Objectives Summary of Testing and Acceptance Criteria
		and the standpipe must be installed. Auxiliary boiler must be operational to provide a source of steam to the turbine-driven pump. Electrical power and control air must be available to components as required for testing. Temporary strainers have been installed for initial pump operation.	such as loss of external power, safety injection signal, low-low steam generator water levels, trip of the Main Feedwater pumps. 2) Both cold functional and hot functional testing will be conducted. Cold functional tests will be limited to minimum flow recirculation pump tests. Hot functional tests will be those conducted while the reactor coolant system and steam generators are at essentially operating temperatures and pressures, and will include pump tests conducted over a range of steam generator pressures. 3) All level-control valves and pressure-control valves and their associated instrumentation and control circuits will be tested to demonstate correct operation. 4) Certain system control and logic circuitry tests will be performed to demonstrate correct operation. Included will be tests to verify that suction line valves to the essential raw cooling water supply proper response to simulated initiation signlas. Acceptance criteria for the performance of the Auxiliary Feedwater System will be met when the system functional requirements given in 10.4.7.2 have been satisfied.

TABLE 14.1-1 (Sheet 70)

LIST OF PREOPERATIONAL TESTS

Test No.	Title of Test	Test Prerequisites	Test Objectives Summary of Testing and Acceptance Criteria
TVA-23A	Auxiliary System Thermal Expansion - Main Steam	The tentative transfer of all the affected equipment from CONST to P PROD has been completed. Installation and required installation inspections and integrity testing for supports, restraints, and hangers have been completed in accordance with design and testing specificaitons. All measuring devices have been installed and inspected. All related pressure transmitters, indicators, and modulators have been checked, tested, and calibrated and are available for service. All of the W-1.2 prerequisites have been completed and the RCS is at ambient temperature. All systems necessary for the Reactor Coolant System Heatup are operational. The secondary steam system will be complete to the point of receiving and dumping steam.	The test objective is to verify that no interferences occur due to thermal expansion during system heatup or due to contraction during system cooldown Measurements will be made at the steady state conditions and all piping will be observed for possible interferences. This test will be performed throughout Hot Functional Testing. The acceptance criteria is that the main steam piping system will expand without interference or obstruction from ambient to operating conditions, and during cooldown will return to ambient conditions without interference or obstruction.
TVA-23B	*Auxiliary Systems Thermal Expansion - Feedwater	The tentative transfer of all the affected equipment from CONST to P PROD has been completed. Installation and required installation inspections and integrity testing for supports, restraints, and hangers have been completed in accordance with design and testing specifications. All measuring devices, located inside the Reactor Building Crane Wall, have been installed and inspected.	The test objective is to verify that no interferences occur due to thermal expansion during system heatup or due to contraction during cooldown. Measurements will be made at the steady state conditions and all piping will be monitored or observed for possible interferences. This test will be performed throughout power ascension testing after fuel loading. The acceptance criteria is that the feedwater piping system will expand without interference or obstruction from ambient to operationg conditions, and during cooldown will return to ambient conditions wihtout interference or obstruction.

TABLE 14.1-1 (Sheet 71)

LIST OF PREOPERATIONAL TESTS

Test No.	Title of Test	Test Prerequisites	Test Objectives Summary of Testing and Acceptance Criteria
TVA-25	Fire Protection System	The tentative transfer of all affected equipment from CONST to P PROD has been completed. Installation and required installation inspection, integrity testing, and cleaning and flushing have been compelted. Electrical power and control air is available to all components requiring such. The AERCW pumping station has been completed to the extent that it can receive a discharge of water from the FPS. Heat tracing for this system has been installed and checked. Instrumentation and controls have been installed, tested, and calibrated.	This test will demonstrate the functional readiness of the high pressure fire protection system. Included in this test will be system response to various fire actuation alarms, measurement of pressure differential across mainline strainers, and verificaiton that check valves separating the Class I (seismic designed) porfrom the remainder of the system are operable. High Pressure Fire Protection System performance will be deemed acceptable when the system requirements given in FSAR section 9.5.1 have been satisfied.
TVA-26	Compressed Air System - (Excluding Control Air)	The tentative transfer of all the affected equipment from CONST to P PROD has been completed. Installation and required installation inspections, integrity testing, and cleaning and flushing activities have been completed. Control air and electrical power is available to all components requiring such. Essential Raw Cooling Water is available to the main station air compressor intercoolers and aftercoolers. Instrumentation and alarms have been installed, tested, and calibrated.	This test will demonstrate that the stationary air compressors & associated criteria requirements. Verification that the service air isolation valve, the cooling water isolation valves, annunciators, and indicator lights operate according to design criteria requirements will be made. System pressures and temperatures will also be checked for criteria compliance. Compressed air system performance will be deemed acceptable when the requirements of section 9.3.1 of the FSAR have been satisfied.
TVA-27	Control Air System (Auxiliary Compressed Air System)	The tentative transfer of all the affected equipment from CONST to P PROD has been completed. Instrumentation and annunciators have been installed, tested and calibrated. Essential	This test verifies the operability of the Control Air System including components, instrumentation and control equipment, and applicable alarms and setpoints. The control air dryers will be placed

TABLE 14.1-1 (Sheet 72)

LIST OF PREOPERATIONAL TESTS

Test No.	Title of Test	Test Prerequisites	Test Objectives Summary of Testing and Acceptance Criteria
		Raw Cooling Water is available to the auxiliary air compressor intercoolers and aftercoolers. All control air lines have been cleaned and applicable pressure and leak rate tests completed. Electric AC and DC power will be available as required. Testing of the stationary air compressors and associated equipment have been completed.	into service and capability to maintain dewpoint at desired level demonstrated. Actuation of the dewpoint alarm at the established setpoint will be demonstrated. Automatic isolation of air supply to service air supply to control air system pressure falls below specified level will be verified. Operability of isolation valves between the two subsystems shall be verified. Start of the auxiliary air compressors when Control Air System pressure decreases to specified level and associated control room alarm will be demonstrated. Acceptance criteria for the Control Air System will be met when design requirements given in FSAR section 9.3.1 have been satisfied. (The control air system is called the auxiliary compressed air system in the FSAR.)
TVA-28	Water Quality and Sampling System	The tentative transfer of all the affected equipment from CONST to P PROD has been completed. Installation and required installation inspections, and cleaning and flushing activities have been completed in accordance with design and testing specifications. Instrumentation and alarms have been installed, tested, and calibrated. Electrical power and control air are available as required. Installation of all sample from the remote sample points to the local	The test demonstrates the capability of the sampling system to provide a representative sample from specified sample points associated with the NSSS and supporting auxiliary systems. Primarily, the test includes those sampling facilities and process analyzers located in the auxiliary building sampling area (hot sample room). Testing shall include: 1) Verification that sample flow rates and temperatures can be regulated to desired values.

TABLE 14.1-1 (Sheet 73)

LIST OF PREOPERATIONAL TESTS

Test No.	Title of Test	Test Prerequisites	Test Objectives Summary of Testing and Acceptance Criteria
		stations have been completed and hydrostatically tested. Demineralized water, component cooling water, essential raw cooling water, and raw cooling water are available.	2) Perform standardization and operational tests on all hot sample room analyzers. Perform functional tests on analyzer indicator and recorder, and verify annunciation on recorder setpoints. 3) Verification that sample isolation valves function properly in response to an electrical signal or loss of power. 4) Demonstration of the capability to adequately sample the reactor coolant and steam generator blowdowns under simulated design basis flood conditions. Verifications that ERCW is supplied to the proper heat exchangers. 5) Verification of proper operation of the Hydrogen Monitor and hot sample cubical ventilation system. Water quality and sampling system performance will be deemed acceptable when the requirements given in section 9.3.2 of the FSAR have been satisfied.
TVA-29	Steam Generator Blowdown System and Verification Feedwater Quality	The tentative transfer of all the affected equipment from CONST to P PROD has been completed. Installation and required installation inspections, integrity testing, and cleaning and flushing activities have been completed. Electrical power and control air are available to all components requiring such. Instrumentation and annunciation have been checked, tested,	The overall objective of this test is to verify that the blow down system operates properly in the normal mode of operation at the maximum and minimum steam generator blowdown flow rates. All three modes of operation used in discharging water from the flash tank should be verified. The feedwater quality shall be tested and verified to be within required specifications for hot functional operation. Also the

TABLE 14.1-1 (Sheet 74)

LIST OF PREOPERATIONAL TESTS

Test No.	Title of Test	Test Prerequisites	Test Objectives Summary of Testing and Acceptance Criteria
		and calibrated. All systems required to support operation and testing of the Steam Generator Blowdown System have either been pre-operationally tested or cleared under an IOR. The sample system for the blowdown and feedwater systems must be operational. The steam generators must be at hot functional test conditions and the secondary chemical treatment system must be operable to maintain secondary water quality within the limits for the hot functional tests with chemical feed systems operable. The full flow condensate demineralizer system must be in operation to accept blowdown.	secondary chemical treatment system shall be demonstrated to be operating properly. Inlet and outlet temperatures for the blowdown heat exchangers will be periodically recorded and samples of the system influent will be collected for analysis. Operation of protective devices will be verified using simulated input signals. These include devices for over pressure, high temperature, and high pH protection. Verification of proper operation of pumps, valves, and radiation monitors shall also be made. Acceptance criteria for this test will be that the system achieves a 90 percent recovery factor and conforms to the design specifications given in FSAR section 10.4.8.
TVA-30	Condenser Vent System	The tentative transfer of all the affected equipment from CONST to P PROD has been completed. Installation and required installation inspections, integrity testing and cleaning and flushing activities have been completed. The Control Air System has either been preoperationally tested or cleared under an IOR. Instrumentation and alarms have been installed, tested, and calibrated. Electrical power supplies have been energized and are available for service.	This test will verify the capability of the system to restrict radioactive emissions to as low as practicable levels. Verification of all filter differential pressures and in-place leak and efficiency tests of filters will demonstrate adequacy of filter installation and design. Proper operation of filter system protective devices, the exhaust headers, and related interlocks will be verified. System performance will be deemed acceptable if the design requirements given in FSAR section 9.4.4.2.3 have been satisfied.
TVA-31A	Process Radiation Monitoring	The tentative transfer of all the affected equipment from CONST to P PROD has	This test will verify proper operation of each check source, instrumentation, pumps indica-

TABLE 14.1-1 (Sheet 75)

LIST OF PREOPERATIONAL TESTS

Test No.	Title of Test	Test Prerequisites	Test Objectives Summary of Testing and Acceptance Criteria
	System (Off-Line Gamma Scintillation Liquid Monitors)	been completed. Installation and required installation inspection of all equipment associated with this system have been completed in accordance with design and testing specifications. All components and equipment required to support operation an testing of the radiation monitoring system have either been preoperationally tested or cleared under an IOR. All instrumentation and alarms have been installed, tested, and calibrated. Electrical power supplies have been energized and the associated equipment is available for service. Each flow control valve for the designated radiation monitors has been adjusted to its desired flow rate.	tors, and control valves and also verify that flow requirements are met. Verification will also be made that on a low flow, or a loss of power, a malfunction alarm will occur for each respective monitor. All interlocks and annunciators will be tested on each monitor. Acceptance criteria will be that the monitors respond to check sources in accordance with calibration data, sample flowrates meet design flow requirements, all annunciators and alarms function properly, and the requirements given in FSAR section 11.4.2.1 for liquid monitors are met.
TVA-31B	Process Radiation Monitoring System (Off-Line Particulate Total-Gas, and Iodine Monitors)	The tentative transfer of all the affected equipment from CONST to P PROD has been completed. Installation and required installation inspections of all equipment associated with this system have been completed in accordance with design and testing specifications. All components and equipment required for operation and testing of this system have either been preoperationally tested or cleared under an IOR. Instrumentation and alarms have been checked, tested, and calibrated. Electrical power supplies have been energized and all associated equipment is available for service. Each flow control valve for	This test will verify proper operation of each check source, instrumentation, pumps, and control valves, and verify that flow requirements are met. Verification that on a low monitor flow, a loss of power, or a filter tape break, a malfunction alarm will occur for each respective monitor. All interlocks and annunciators will be tested. Acceptance criteria will be that the monitors respond to check source in accordance with calibration data and sample floor rates meet design requirements, as given in FSAR section 11.4.2.2.4 for off-line monitors.

TABLE 14.1-1 (Sheet 76)

LIST OF PREOPERATIONAL TESTS

Test No.	Title of Test	Test Prerequisites	Test Objectives Summary of Testing and Acceptance Criteria
		the designated monitors has been adjusted to its desired flow rate.	
TVA-31C	Process Radiation Monitoring System (Gaseous Monitors - Total Gas)	The tentative transfer of all the affected equipment from CONST to P PROD has been completed. Installation and required installation inspections for all equipment associated with this system have been completed in accordance with design and testing specifications. All components and equipment required to support operation and testing of this system have either been properationally tested or cleared under an IOR. Instrumentation and alarms have been installed, tested, and calibrated. Each flow control valve for the designated radiation monitor has been adjusted to its desired flow rate. Electrical power supplies have been energized and associated equipment is available for service.	Each off-line monitor assembly consists of a beta scintillation detector, a preamplifier, appropriate control valves, indicators, and instrumentation. This test shall verify proper operation of each check source, instrumentation, pumps, indicators, and control valves and verify that flow requirements are met. Verification will also be made that on a low monitor flow or a loss of power, a malfunction alarm will occur for each respective monitor. All interlocks and annunciators will be tested for instrument upscale and downscale radiation indicator trips. Acceptance criteria will be that the monitors respond to check sources in accordance with calibration data, sample flow rates meet design requirements, all annunciators and alarms function properly, and the requirements given FSAR sections 11.4.2.2.5 and 11.4.2.2.6 for the off-line gaseous monitors are met.
TVA-31D	Process Radiation System (Off-Line Gaseous Monitors)	The tentative transfer of all the affected equipment from CONST to P PROD has been completed. Installation and required installation inspections of all equipment associated with this system have been completed in accordance with design specifications. All components and equipment required to support operation and testing of this system have either been preoperationally tested or cleared under	Each monitor assembly consists of a Geiger-Mueller tube with a preamplifier and appropriate indicators and instrumentation. Each check source will be tested for proper operation and instrument response. Verification will also be made that on a loss of power, a malfunction alarm occurs for each receptive monitor. Interlocks and annunciators will also be tested for initiation on upscale and downscale radiation indicator trips.

TABLE 14.1-1 (Sheet 77)

LIST OF PREOPERATIONAL TESTS

Test No.	Title of Test	Test Prerequisites	Test Objectives Summary of Testing and Acceptance Criteria
		an IOR. Instrumentation and alarms have been installed, tested and calibrated. Electrical power supplies have been energized and all associated equipment is available for service.	Acceptance criteria will be that the monitors respond to check sources in accordance with calibration data, sample flow rates meet design requirements, all annunciators and alarms function properly, and the requirements given in FSAR section 11.4.2.2.3 for the GM detectors are met.
TVA-32A	Area Radiation Monitoring System - Area Monitor	The tentative transfer of all the affected equipment from CONST to P PROD has been completed. Installation and required installation inspections have been completed in accordance with design and testing specifications. All components and equipment required to support operation and testing of the radiation monitoring system radiation monitoring system have either been preoperationally tested or cleared under an IOR. Instrumentation and alarms have been installed, tested, and calibrated. Electrical power supplies have been energized and all associated equipment is available for service. The flow control valves for each particulate radiation monitor have been adjusted to their proper setpoints.	The area radiation monitor system consists of radiation monitors which use a Geiger-Mueller tube as a sensing element. This test will verify proper operation of each check source, pumps, indicators, and control valves and verify that flow requirements to particulate monitors are met. This test will also verify that on a low monitor flow, loss of power, or a filter tape break, a malfunction alarm occurs for each respective monitor. Acceptance criteria will be that the monitors respond to check sources in accordance with calibration data, sample flow rates meet design requirements, all annunciators and alarms function properly, and the requirements given in FSAR section 12.1.4 are met.
TVA-32B	Area Radiation Monitoring System - Radiation Survey Monitors	The tentative transfer of all the affected equipment from CONST to P PROD has been completed. Installation and required installation inspections have been completed in accordance with design and testing specifications. All components and equipment re-	This test will verify that the laboratory radioactivity counting equipment, laundry monitor, portal monitors, and local hand and foot monitors function in a manner which ensure accurate and reliable monitoring and personal safety. Response to the appropriate check source

TABLE 14.1-1 (Sheet 78)

LIST OF PREOPERATIONAL TESTS

Test No.	Title of Test	Test Prerequisites	Test Objectives Summary of Testing and Acceptance Criteria
		quired to support operation and testing of radiation monitoring system have either been preoperationally tested or cleared under an IOR. Instrumentation, alarms, and counting instruments have been installed, tested, and calibrated.	signals will be verified and the proper initiation of the annunciation functions for high and low trips will be checked. Acceptance criteria will be that the monitors respond to check sources in accordance with calibration data and that system alarms function properly.
TVA-33	Environs Radiation Monitoring System	The tentative transfer of all the affected equipment from CONST to P PROD has been completed. Installation and required installation inspections have been completed. The PAX Telephone System and the Annunciator System have either been preoperationally tested or cleared under an IOR. Instrumentation and alarms have been installed, tested, and calibrated. Electrical power supplies have been energized.	This test will verify and document the capability of the local and perimeter environmental radiation monitors to perform their design function. Each unit will be tested individually to verify local and control room indication response. All alarms and high and low setpoints will be checked. Acceptance criteria will be that the radiation monitors respond to their check source in accordance with calibration data, and all annunciators, alarms, and recorders function per design.
TVA-34	Nitrogen Supply System	The tentative transfer of all the affected equipment from CONST to P PROD has been completed. Installation and required installation inspections, integrity testing, and cleaning activities have been completed. Instrumentation and alarms have been checked, tested, and calibrated. Electrical power and control air is available to all components requiring such. The system, including nitrogen bottles, manifold pressure regulators, and control valves is	This test will verify the operability of the Nitrogen System and its components. Capability of the high-pressure section of the system to supply nitrogen at 650 to 675 psig to the accumulators will be verified. The low-pressure section will be tested for automatic switching capability upon low pressure signals and the capability to supply nitrogen at 100 psig to served components will be demonstrated. All applicable alarms and setpoints will be verified.

TABLE 14.1-1 (Sheet 79)

LIST OF PREOPERATIONAL TESTS

Test No.	Title of Test	Test Prerequisites	Test Objectives Summary of Testing and Acceptance Criteria
		operational.	Acceptance criteria will be that the requirements for the Nitrogen Supply System given in the FSAR section 9.5.9 have been satisfied.
TVA-35A	Powerhouse CO_2 Fire Protection System	The tentative transfer of all the affected equipment from CONST to P PROD has been completed. Installation and required installation inspections, integrity testing, and cleaning activities of all equipment associated with this system have been completed in accordance with design and testing specification. All systems required to support operation and testing of the powerhouse CO_2 fire protection system have either been preoperationally tested or cleared under an IOR. Instrumentation and alarms have been checked, tested, and calibrated. All pyrotonics fire detection components have been installed, tested, and loop checked by test representatives. Control, turbine and service building HVAC systems are in service. Electrical power supplies have been energized and all associated equipment is available for service.	This test will verify that for the CO_2 fire protection for powerhouse will supply adequate quantities and concentrations of carbon dioxide to essential areas which are designate Class I conditions. The applicable portions of the system will be tested throughout all design operational modes (i.e., automatic, manual, and electric operation). Testing will be conducted by actually releasing CO_2 into the specified hazard areas and measuring resulting concentrations. Proper operation of applicable alarms, timers, and associated controls will be verified. Acceptance criteria for the Powerhouse CO_2 Fire Protection System will be verification that the system requirements given in FSAR section 9.5.1 have been satisfied.
TVA-35B	Diesel Building CO_2 Fire Protection System	The tentative transfer of all the affected equipment from CONST to P PROD has been completed. Installation and required installation inspections, integrity testing, and cleaning activities for all equipment associated with this system have been completed in accordance with design and testing specifications. All systems required to support operation and testing of the CO_2 fire protection system have either been preoperationally tested or	This test will verify that the CO_2 fire protection system for the diesel generator building is capable of supplying adequate quantities and concentrations of CO_2 to essential areas. CO_2 will be released into each hazard area and the CO_2 concentrations will be verified. The applicable portions of the system will be tested throughout all design operational of applicable alarms, timers, and associated Acceptance criteria will be

TABLE 14.1-1 (Sheet 80)

LIST OF PREOPERATIONAL TESTS

Test No.	Title of Test	Test Prerequisites	Test Objectives Summary of Testing and Acceptance Criteria
		cleared under an IOR. Instrumentation and alarms have been installed, tested, and calibrated. All pyrotonics fire detection components have been installed, tested, and loop checked by test representatives. Diesel generator building heating and ventilating systems are in service. Electrical power supplies have been energized and all associated equipment is available for service.	that the system requirements given in FSAR section 9.5.1 have been satisfied for the diesel generator building.
TVA-36	Emergency Lighting System	The tentative transfer of all the affected equipment from CONST to P PROD has been completed. Installation and required installation inspections have been completed. All systems required to support operation and testing of the Emergency Lighting System have either been preoperationally tested or cleared under an IOR. Electrical supplies have been energized and all associated equipment is available for service.	The test is to confirm that the emergency DC lighting system satisfies design requirements. Test will consist of interrupting the standby lighting sources and providing illumination solely from the emergency system. Footcandle level data will be taken at selected locations. Acceptance criteria will be that the emergency system immediately provides minimum illumination levels in area essential to safe shutdown of the plant when other lighting sources are unavailable. Also the requirements given in FSAR section 9.5.3 must be satisfied.
TVA-37	Hydrogen System	The tentative transfer of all the affected equipment from CONST to P PROD has been completed. Installation and required installation inspections, integrity testing, and cleaning activities have been completed. All systems required to support operation and testing of the Hydrogen System have either been preoperationally tested or cleared under an IOR.	Test objective is to verify the operability and safety of the system. The system capability to automatically isolate the system in case the a line break will be demonstrated. All control valves will be tested for proper pressure maintenance at served components. These valves will be verified to close on a sudden increase of pressure.

TABLE 14.1-1 (Sheet 81)

LIST OF PREOPERATIONAL TESTS

Test No.	Title of Test	Test Prerequisites	Test Objectives Summary of Testing and Acceptance Criteria
		Instrumentation and alarms have been installed, tested, and calibrated. Electrical power and control air is available to all components requiring such. Proper amounts of nitrogen are available onsite to facilitate testing.	Acceptance criteria for the Hydrogen System will be that the requirements given in FSAR section 9.5.8 have been satisfied. (Note that ventilation requirements for the volume control tank rooms are addressed in test TVA-9C.)
TVA-38	Main Feedwater System	The tentative transfer of all the affected equipment from CONST to P PROD has been completed. Installation and required installation inspections, integrity testing, and cleaning and flushing activities have been completed. Instrumentation and alarms have been installed, tested, and calibrated. Electrical power and control air are available to all components requiring such. The Main Feedwater System has been filled and vented so the feedwater isolation and bypass valves will not be cycled dry.	This test will demonstrate the engineered safety features as of the Main Feedwater System by verifying that the feedwater flow to all steam generators can be stopped within the time required for safe shutdown of the unit. Manual control of the safety-related feedwater valves and their response time of closure will be tested. Feedwater isolation upon receipt of a simulated hi-hi steam injection signal, or reactor trip along with a low T-average will be verified. A trip signal to the main feed pump turbines and hotwell pumps due to a simulated safety injection signal or high-high steam generator level signal will be verified. System performance will be deemed acceptable when the criteria given in FSAR section 10.4.7.1.3 have been satisfied.
TVA-40	Main Steam System	The tentative transfer of all the affected equipment from CONST to P PROD has been completed. Installation and required installation inspections, integrity testing, and cleaning and flushing activities of the main steam system piping and components have been completed. Instrumentation and annunciators have been	The test will demonstrate that main steam flow from all steam generators can be stopped within a specified time period by closure of all main steam isolation valves and main steam isolation bypass valves. The test will verify capability of valves to be tripped closed in response to simulated input signals denoting either high-high containment pressure or

TABLE 14.1-1 (Sheet 82)

LIST OF PREOPERATIONAL TESTS

Test No.	Title of Test	Test Prerequisites	Test Objectives Summary of Testing and Acceptance Criteria
		installed, tested, and calibrated. Electrical power and control air is available to all components requiring such. The brush recorders for measuring the closure times of the MSIVs have been calibrated and are operational.	high steam line flow in coincidence with either low steam line pressure or low-low TAVG. The valves will be tripped closed by simulated signals from each power train to demonstrate main steam line isolation capability in the event of total loss of one power train. The partial closure feature of main steam isolation valves will also be demonstrated. Acceptance criteria for the main steam system will be met when the isolated timing requirements given in FSAR section 10.3.2.1 have been satisfied.
TVA-41	Containment Isolation System	The tentative transfer of all the affected equipment from CONST to P PROD has been completed. Installation and required installation inspections have been completed. Electrical power shall be available to all components and control air shall be available for air-operated isolation valves. This test will be performed before fuel loading. NOTE: Additional testing on certain containment isolation valves was performed during the unit 2 restart test program via STI-20 and -81.	The test verifies capability of the system to isolated the containment upon receipt of actuation signals generated by either the solid-state protection system or main control room switches. Specifically, the test includes the following: 1) Manual operation of each containment isolation valve using control room switches. The following will be verified: valve change of position, position light indication, and valve closing time. 2) Simulated output signals from the solid-state protection system will be used to actuate the containment isolation valves which function automatically in response to containment isolation phases A and B, and containment vent isolation signals.

TABLE 14.1-1 (Sheet 83)

LIST OF PREOPERATIONAL TESTS

Test No.	Title of Test	Test Prerequisites	Test Objectives Summary of Testing and Acceptance Criteria
			3) Air-operated containment isolation valves will be demonstrated to change to proper "fail-safe" position upon loss of either control air or electrical power. Acceptance criteria for the test will be that the system satisfies design functional requirements specified in FSAR section 6.2.4.
TVA-42	Turbine and Generator Control and Protection System	The tentative transfer of all the affected equipment from CONST to P PROD has been completed. Instrumentation and alarms have been installed, tested, and calibrated. All systems required to support operation and testing have either been preoperationally tested or cleared under an IOR. Raw cooling water is available to all heat exchangers. Electrical power and control air are available to all components requiring such. Turbine lube oil system and EH hydraulic fluid system have been completely installed, flushed, tested, and are available for operation. Normal turbine protective systems (hydraulic, mechanical, electrical, and electronic) have been installed, tested, and are ready for zero speed operation. Reactor protection system has been completed, tested, and is operational.	The test demonstrates that turbine protective systems are actuated both from reactor protection system inputs and from the various turbine protective trips. Applicable reactor protection system input signal (i.e., P-4 reactor trip signals, steam generator hi-hi level, and safety injection) will be simulated and proper functioning of the turbine protection system will be verified. The test will demonstrate that: 1) Tripping the control emergency trip fluid causes trip closure of all control and intercept valves and all non-return valves. 2) Tripping the stop emergency trip fluid causes tripping of all stop and reheat stop valves and also tripping of the control emergency trip fluid system. 3) Tripping of the auto stop oil causes tripping of both the control and stop emergency trip fluid systems. Verification that auto stop oil is tripped by various turbine hazard condition monitors and interface sensors will be demonstrated.

TABLE 14.1-1 (Sheet 84)

LIST OF PREOPERATIONAL TESTS

Test No.	Title of Test	Test Prerequisites	Test Objectives Summary of Testing and Acceptance Criteria
TVA-43A	Cranes and Heavy Equipment 175-Ton Polar Crane	The tentative transfer of all the affected equipment from CONST to P PROD has been completed. The polar crane has been erected and inspected, and electrical power is available.	This test will demonstrate that the safety features of the 175-ton polar crane are functioning properly. Testing will verify: 1) The ability of each hoist brake to independently stop a rated load from full lowering speed within a distance of six inches. 2) The ability of the emergency dynamic hoist braking systems to control speed of a load with the electric brakes manually held open. 3) Proper operation of the geared hoist upper and lower travel limit switches. 4) Counterweight level limit switches limit upward travel of hoists. 5) Proper operation of hoist overspeed switches. 6) Proper operation of the warning horn. 7) Proper performance of hoists with a rated load. Acceptance criteria for this test shall be that the 175-ton polar crane performs in accordance with industry accepted testing specifications for cranes. 4) The overspeed protection control feature on the turbine speed/load control system functions properly. System acceptance criteria will be met when the requirements given in FSAR section 10.2.2

TABLE 14.1-1 (Sheet 85)

LIST OF PREOPERATIONAL TESTS

Test No.	Title of Test	Test Prerequisites	Test Objectives Summary of Testing and Acceptance Criteria
			for the turbine-generator control and protection system have been satisfied.
TVA-43B	Cranes and Heavy Equipment 125-Ton Auxiliary Building Crane	The tentative transfer of all the affected equipment from CONST to P PROD has been completed. The auxiliary building crane has been erected and inspected and electrical power is available.	This test will demonstrate that the safety features of the 125-ton crane are functioning properly. Testing will demonstrate: 1) Proper functioning of each spent fuel pit stop limit switch while operating the crane on the east, west, and notrh sides of the spend fuel pit. 2) Proper operation of the movable, administratively controlled, trolley bumper stops. 3) Proper brake settings for all brakes on the crane. 4) The amount of trolley and bridge skewing. 5) Proper operation of the hoist overspeed switch. 6) The amount of trolley hook travel. Acceptance criteria for this test will be that the 125-ton auxiliary crane's movement can be restricted over the spent fuel pit satisfactorily and the crane performs in accordance with industry accepted testing specifications.
TVA-44	Liquid Waste Drains, Collection, and Transfer Facilities	The tentative transfer of all the affected equipment from CONST to P PROD has been completed. Installation and required installation inspections, integrity testing, and cleaning and	The test demonstrates that all drains are clear and capable of draining of the required rate. Each drain will be visually inspected and any trash or solid waste material removed. Any convenient source of clean

TABLE 14.1-1 (Sheet 86)

LIST OF PREOPERATIONAL TESTS

Test No.	Title of Test	Test Prerequisites	Test Objectives Summary of Testing and Acceptance Criteria
		flushing activities have been completed. All systems required to support operation and testing of this system have either been preoperationally tested or cleared under an IOR. The auxiliary building and reactor building floor and equipment drain sumps must be capable of receiving and transferring drainage. All drain collector tanks must be capable of receiving liquid waste. Transfer pumps associated with these tanks should be operable. Instrumentation has been installed, tested, and calibrated. Control air, electrical power, and demineralized water are available to all components requiring such.	water will be used to deliver water to drains at specified rates. Drain flow rates will be measured and visually observed if possible. Set-points for sump level alarms and pump actuation will be checked by filling and draining the sumps. System performance will be deemed acceptable when the requirements given in section 11.2.5 of the FSAR have been satisfied.
TVA-45A	Station Drainage System (Turbine Building Station Sump)	The tentative transfer of all the affected equipment from CONST to P PROD has been completed. All components and equipment required to support operation and testing of this system have either been preoperationally tested or cleared under an IOR. Instrumentation and the pump level alarm have been installed, tested, and calibrated. A source of raw water near the station pump will be available. Electrical power supplies have been energized.	This test demonstrates the ability of the sumps and associated pumps located in the turbine building to receive and adequately discharge the various non-radioactive waste liquids generated in this building. Automatic and manual operation of all pumps will be checked and all control and alarms will be tested for proper operation. Acceptance criteria for this system will be met when the operation of the pumps, valves, and alarms in all operational modes is in accordance with section 9.3.3 of the FSAR.
TVA-45B	Station Drainage System - Service Building	The tentative transfer of all the affected equipment from CONST to P PROD has been completed. Installation and required installa-	This test will verify the capability of the sumps and associated sump pumps located in the control and service buildings to receive and

TABLE 14.1-1 (Sheet 87)

LIST OF PREOPERATIONAL TESTS

Test No.	Title of Test	Test Prerequisites	Test Objectives Summary of Testing and Acceptance Criteria
		tion inspections, integrity testing, and cleaning and flushing activities have been completed in accordance with design and testing specifications. All components and equipment required to support operation and testing of this system have either been preoperationally tested or cleared under an IOR. Instrumentation and alarms have been installed, tested and calibrated. A temporary source of raw water is available to the Service and Control Building sumps. Electrical power supplies have been energized and all associated equipment is available for service.	adequately discharge the nonradioactive liquid waste generated in these buildings. Verification of pump controller action and setpoints will be made as well as manual and automatic operation of the pumps. All controls and alarms will be checked for proper operation. Acceptance criteria for this test will be that the operation of the station drainage system to the sumps for the control and service buildings, is in accordance with design and testing specifications given given in section 9.3.3 of the FSAR.
TVA-46	Primary Makeup Water System	The tentative transfer of all the affected equipment from CONST to P PROD has been completed. Installation and required installation inspections, integrity testing, and cleaning and flushing activities have been completed. The Demineralized Water Distribution and Makeup Water Treatment Systems have either been preoperationally tested or cleared under an IOR. Instrumentation and alarms have been checked, tested, and calibrated. Control air and electrical power supplies are available to all components requiring such. Primary makeup water has been filled to normal operating level with makeup quality water.	This test demonstrates the capability of the system to supply makeup water to the required points in the reactor and auxiliary buildings. The test includes flow-rate measurements to demonstrate pump capabilities and adequacy of distribution piping, and checking of alarms and indicated PMWT levels. Acceptance criteria will be that the PMWS satisfies the requirements given in FSAR section 9.3.4.2.2.

TABLE 14.1-1 (Sheet 88)

LIST OF PREOPERATIONAL TESTS

Test No.	Title of Test	Test Prerequisites	Test Objectives Summary of Testing and Acceptance Criteria
TVA-49	Status Monitoring System	The tentative transfer of all the affected equipment from CONST to P PROD has been completed. Installation and required installation inspections have been completed. Electrical power supplies have been energized.	This test will demonstrate the capability of the SMS to show available protection systems and to continuously monitor safety related plant equipment status. It will verify that the status of any system which has been bypassed or inadvertently made inoperable will be indicated to the operator by an indicating lamp and on a cathode ray tube, CRT display. Also demonstrated will be the capability to manually enter into the SMS the status of devices not automatically monitored. Proper CRT display and timing for devices having a grace time will be verified. Acceptance criteria for this test will be that the requirements given in FSAR section 7.1.4.2 have been satisfied.
TVA-50	Reactor Coolant Pressure Boundary (RCPB) Leakage Detection	The tentative transfer of all the affected equipment from CONST to P PROD has been completed. Installation and required installation inspections, integrity testing, and cleaning and flushing of all associated equipment have been completed. Instrumentation and annunciators have been installed, tested, and calibrated. Electrical power is available to each leakage detection instrument, control panels M-10, M-5, and M-6, and other associated equipment as required.	This test will only check part of the RCPB leakage detection system: that part consisting of the humidity detectors located in the containment upper and lower compartments, and that part consisting of the reactor vessel flange leakoff valve and temperature detector. The capability of these detectors to alarm at an indication of RCPB leakage will be demonstrated. Acceptance criteria for the RCPB Leakage Detection System will be that the requirements given in FSAR section 5.2.7 have been satisfied.
TVA-51	Flood Protection Provisions	The tentative transfer of all the affected equipment from CONST to P PROD has been completed. Installa-	This test will demonstrate the operational capability of, along with vibrational tests for, the Auxiliary Charging

TABLE 14.1-1 (Sheet 89)

LIST OF PREOPERATIONAL TESTS

Test No.	Title of Test	Test Prerequisites	Test Objectives Summary of Testing and Acceptance Criteria
		tion and required installation inspections, integrity testing, and cleaning and flushing activities have been completed. Essential Raw Cooling Water is available to the Containment Cooling System and ice condenser coolers. Demineralized water is available to the auxiliary boration makeup tank. Electrical power supplies have been energized.	System. The portable diesel forebay makeup pumps flow capability will be verified. Also the spool piece connections of core cooling will be tested for ease of installation. Installation of temporary jumper cables will also be simulated. Acceptance criteria for this test will be that the requirements given in FSAR sections 9.3.6 and 2.4A.2.2 have been satisfied.
TVA-52	Seismic Instrumentation	The tentative transfer of all the affected equipment from CONST to P PROD has been completed. Installation and required installation inspections for all seismic instrumentation have been completed. Instrumentation and annunciators have been installed, tested, and calibrated.	The seismic instrumentation is necessary to monitor the behavior of Category I structures, systems, and components should the plant experience a seismic event. This test shall ensure that the instrumentation is installed, calibrated, and functioning properly. Acceptance criteria for this test will be that the seismic instrumentation satisfies the design requirements given in FSAR section 3.7.4
TVA-53	Equipment for Replacement of Radwaste Filter Elements	The tentative transfer of all the affected equipment from CONST to P PROD has been completed. Installation and required installation inspections and cleaning activities have been completed in accordance with design and testing specifications. Electrical power supplies have been energized. The filters necessary for testing of the handling equipment have either been preoperationally	This test shall demonstrate the adequacy of the equipment and instructions for replacement and safe handling of filter cartridges located in the auxiliary building. The equipment to be tested consists of special handling tools, hatch shield plate and tool plug, transfer cask, motorized dolly, drum casks, and the filter seals. The acceptance criteria will be that the handling tools,

TABLE 14.1-1 (Sheet 90)

LIST OF PREOPERATIONAL TESTS

Test No.	Title of Test	Test Prerequisites	Test Objectives Summary of Testing and Acceptance Criteria
		tested or cleared under an IOR and are in place in their housings.	equipment, and instructions are adequate safety margins for radiological protection of personnel during future filter handling operations.
TVA-54	Main Control Room Meteorological Tower Data	The tentative transfer of all the affected equipment from CONST to P PROD has been completed. Installation and required installation inspections have been completed in accordance with design and testing specifications. The Computer Demultiplexer for environmental monitoring has been functionally tested. Instrumentation has been installed, tested, and calibrated.	The Main Control Room Meteorological Data System will be tested for its capability to perform its required functions. This test will demonstrate that certain meteorological parameter collected at the onsite meteorological facility are continuously and accurately recorded in the main control room. This test encompasses functional testing of only that equipment required for transmitting certain meteorological data from the meteorological facility to the control room. These data are wind speed and direction at the 46- and 10- meter (m) levels and vertical temperature difference between the 46- and 10-m and the 91- and 10-m levels. Acceptance criteria for the Main Control Room Meteorological Data System will be that the requirements given in FSAR section 2.3.3 have been satisfied.
TVA-55	Vibration and Loose Paris Monitoring Systems	Electronics checkout must be made prior to hot functional testing but the signature profiles will be made during hot functional testing.	Verify the ability of the vibration and loose parts monitoring system to detect and record alarm conditions on any of the detection channels associated with major Reactor Coolant System components. Generate initial signature profiles on the reactor pressure vessel, steam generators, and reactor coolant pumps.

TABLE 14.1-1 (Sheet 91)

LIST OF PREOPERATIONAL TESTS

Test No.	Title of Test	Test Prerequisites	Test Objectives Summary of Testing and Acceptance Criteria
TVA-56	ESFAS Reset (Unit 1 Only)	Tentative transfer of all affected equipment from CONST to NUC PR has been completed. Installation and required inspection activities have been completed. All components and equipment required to support operation and testing have been preoperationally tested. Various plant conditions are required for testing the devices included in this test.	This test will verify the state of all devices that receive an Engineered Safety Features Actuation Signal (ESFAS) after the actuation signal is reset. Individual slave relays in the Solid State Protection System will be manually actuated to produce the ESFAS. Proper emergency states for the actuated equipment will then be verified, the ESFAS will be reset, and the equipment states will be checked again to verify the proper emergency position has been retained.
TVA-57	ERCW Pumping Station Heating and Ventilating System	Confirmation that construction activities are complete. Correct electrical power and connections to fans, dampers, heaters, and control circuits shall be assured. Proper lubrication of fans and motors shall be cleaned to remove all foreign debris that might cause damage to the system or the exhaust fans are its components. Controls shall be installed, tested, operational, and adjusted according to manufacturer's instructions. Data shall have been submitted to and approved by EN DES to include but not be limited to: A. Air flow rates in cfm for each portion of each system. B. Fan static pressure in inches of water for each system taken from near fan inlet and fan discharge. C. Operating data from each fan to include fan rpm, motor rpm, motor voltage, and motor current in amperes.	The test objective is to demonstrate the following capabilities: A. The supply and exhaust fans for the electrical and mechanical equipment rooms are controlled from a local control switch near each supply fan started from auxiliary contacts on the supply fan motor starter. B. Motor-operated dampers mounted in the air stream of each fan will automatically open or close when the fans are started or stopped. C. A multistage duct heater is installed in the discharge air stream of each equipment room supply fan. Each heater is controlled by a step controll operated from a thermostat sensing the unheated air temperature. D. The unit heaters located in the mechanical and electrical equipment rooms are properly controlled by built-in thermostats.

TABLE 14.1-1 (Sheet 92)

LIST OF PREOPERATIONAL TESTS

Test No.	Title of Test	Test Prerequisites	Test Objectives Summary of Testing and Acceptance Criteria
		D. Dry bulb and wet bulb temperature for fresh air.	
TVA-66	Interim Controlled Hydrogen Ignition System (Unit 2 Only)	The tentative transfer of all affected equipment from CONST to NUC PR has been completed. Installation and required installation inspection activities have been completed. All components and equipment required to support operation and testing have been preoperationally tested or cleared under an IOP.	This test verifies that the system will provide ignition sources of a specified temperature. Each igniter is energized and the voltage and surfacer temperature of the igniter is recorded. The acceptance criteria for the igniters is: A. The AC voltage at the output of each igniter transformer, is no greater than 14 volts and no less than 12 volts. B. The temperature of each igniter is at least 1500°F

* All or portions of this pre-operational test are to be completed after fuel loading.

TABLE 14.1-2 (Sheet 1)

LIST OF STARTUP TESTS UNIT 1

Title of Test	Test Prerequisites	Summary of Testing and Acceptance Criteria
I. Core-Loading Program		
SU-6.2 Core-Loading Pre requisites	Hot functional test program completed. Plant being readied for core loading.	The objective of this instruction is to ensure the operability of equipment and systems necessary for a safe and expeditious core loading. Temporary neutron monitoring channels to be utilized during core loading will be checked and demonstrated to be operable.
SU-6.3 Reactor Systems Sampling Prior to and During Core Loading	Reactor vessel head removed and vessel water level is above the centerline of the outlet nozzles in preparation for core loading. Reactor cooling system and connected auxiliary systems have been borated to specified concentrations. The CVCS System, RHR System, Safety Injection System, and component cooling system are in service with RHR System circulating coolant through the vessel.	The test verifies correct and uniform boron concentration, prior to core loading, in all parts of the reactor coolant system and directly connected auxiliary systems and verifies equipment status and plant conditions during core loading to ensure that planned conditions are being maintained.
SU-6.1 Initial Core Loading	Nuclear instrumentation and communications required for core loading installed and verified operational. Reactor vessel is ready to receive fuel and required fuel handling tools are available for use. Startup test SU-6.2 has been completed and RHR System is in service. Equipment door and at least one door in each personnel airlock are closed. At least	The instruction establishes the conditions under which installation of the initial nuclear fuel charge is to be accomplished and specifies the sequence of events which constitutes the initial core-loading program. The instruction includes a core-loading sequence which specifies the loading in a step-by-step fashion with the appropriate precautions and prerequisites for each step listed.

TABLE 14.1-2 (Sheet 2)

LIST OF STARTUP TESTS UNIT 1

Title of Test	Test Prerequisites	Summary of Testing and Acceptance Criteria
	one flow path for emergency boration is available. All required preloading tests have been completed and the requirements of SU-6.3 have been satisfied.	
II. Precritical Testing (Tests to be completed after Core Loading)		
Preoperational Tests:		
Pressurizer Spray and Heater Capability and Continuous Spray Flow Setting	See Table 14.1-1	
Reactor Coolant System Flow Measurement	See Table 14.1-1	
Reactor Coolant Flow Coastdown	See Table 14.1-1	
Resistance Temperature Detector Bypass Loop Flow Verification	See Table 14.1-1	
Rod Drive Mechanism Timing	See Table 14.1-1	
Rod Control System	See Table 14.1-1	
Rod Drop Time Measurements	See Table 14.1-1	
Rod Position Indication System	See Table 14.1-1	
Incore Movable Detectors	See Table 14.1-1	
Adjustment to Reactor and Turbine Control Systems	See Table 14.1-1	
STARTUP TESTS		

TABLE 14.1-2 (Sheet 3)

LIST OF STARTUP TESTS UNIT 1

Title of Test	Test Prerequisites	Summary of Testing and Acceptance Criteria
SU-1.0 Plant Measurements-Operational and Baseline Data	Reactor Core loaded in preparation for startup testing	The test implements a program of gathering and analyzing baseline and operational data. Radiation surveys are performed at various steps during the power escalation to determine radiation dose-levels at preselected locations throughout the plant to evaluate the adequacy of plant shielding. A chemical and radio- chemical program of sampling and analysis will be implemented coincident with core loading. Specified analyses will be performed at major steps of the startup program to gather baseline chemical/radio- chemical data and to demonstrate that plant water chemistry requirements can be maintained. Coincident with initial criticality an, effluent monitoring and analysis program will be implemented to ensure that plant effluents potentially containing radioactive materials are monitored and the effluent monitors are calibrated and operational.
III. Initial Criticality and Low Power Testing		
SU-7.1 NSSS Startup Sequence	Installation of nuclear steam supply system, all components of turbine steam system, and supporting control and auxiliary systems is complete. All pre-operational testing except as outlined in this sequence shall have been successfully completed or specifically waived for this sequence of tests. Reactor Coolant System at ambient temperature and borated to required concentration. Adequate makeup water available for extensive dilution. Concentrated boric acid	This instruction prescribes the sequence of operations constituting the plant startup testing program. The sequence of operations is presented in tabular form as the NSSS Startup Sequence, in which detailed instructions, specific plant conditions, and test procedures are included.

TABLE 14.1-2 (Sheet 4)

LIST OF STARTUP TESTS UNIT 1

Title of Test	Test Prerequisites	Summary of Testing and Acceptance Criteria
	available in sufficient quantity for extensive boration. All special test equipment required for this testing sequence is available and operational.	
SU-7.2 Initial Criticality	Plant at hot shutdown with at least 2000 ppm boron in the RCS. The source and intermediate range nuclear instrumentation channels are operational with 3 of 4 power range channels in operation.	The objective is to bring the reactor critical for the first time from the plant conditions specified. All rods are withdrawn except the last controlling group, which is left partially inserted for control once criticality is achieved by boron dilution. At preselected points in rod withdrawal and boron dilution, data is taken and inverse count rate plots made to enable extrapolating to the expected critical point. When the inverse count rate ratio reaches a preselected value, dilution is stopped and the system allowed to mix. If criticality is not achieved during mixing, bank D control rods are withdrawn until criticality is achieved.
SU-7.3 Nuclear Design Check Tests	Plant at zero power. These tests are run as part of the zero power physics test program. The RCC control selector switch is on bank control. The temperature is 547 + 0, -5°F and pressure is 2235 ± 50 psig.	The test establishes the boron concentration endpoint with various rod configurations, determines the isothermal temperature coefficient of reactivity, and determines the neutron flux distribution at various rod distributions. The boron endpoints are measured by determining the boron concentration of the coolant system with the rods partially inserted. The rod is then quickly pulled and reinserted with no boron adjustment. The change in reactivity is measured and the end- point calculated. The isothermal moderator temperature coefficient is determined by heating the coolant system at a constant rate

TABLE 14.1-2 (Sheet 5)

LIST OF STARTUP TESTS UNIT 1

Title of Test	Test Prerequisites	Summary of Testing and Acceptance Criteria
		and then cooling down at a constant rate. The total temperature swing is about 5°F. The temperature versus reactivity is plotted and the slope of the lines generated is the isothermal moderator temperature coefficient. The neutron flux distribution is determined by inserting miniature flux detectors into core locations with the flux indicated on strip chart recorders.
*SU-7.4 Rod and Boron Worth Measurements During Boron Dilution *SU-7.5 Rod and Boron Worth Measurements During Boron Addition	Reactor just critical at zero power. Rod banks positioned as specified in startup sequence (SU-7.1). RCC control on bank control. Reactor coolant system pressure at 2235 ± 50 psig; coolant system temperature at 547 ± 5°. Flux signal from one power range detector connected to reactivity computer.	The test determines the differential and integral worth of the RCC banks, and determines the differential boron worth over the range of the RCC banks. The nuclear design predictions for Rod Cluster Control Assembly (RCCA) group differential worths are validated. Rods are inserted or with drawn as boron is constantly added or diluted. The worth of the rods is compensated for by boron. Rod movement will cause step changes in reactivity which are measured on a reactivity computer. Differential boron worth measurements are made by increasing or decreasing reactor coolant boron concentration. Compensation for reactivity effect of boron concentration change will be made by withdrawing or inserting, respective control rods to maintain moderator average temperature and power level constant and observing the result-and accumulated change in core reactivity corresponding to these successive rod movements. Both of these measurements are done simultaneously.
SU-7.6 Rod Cluster Con-	Reactor just critical at zero	The test determines the worth of the

TABLE 14.1-2 (Sheet 6)

LIST OF STARTUP TESTS UNIT 1

Title of Test	Test Prerequisites	Summary of Testing and Acceptance Criteria
trol Assembly (RCCA) Pseudo Ejection at Zero Power	power. Rod banks positioned as specified in startup sequence (SU-7.1). RCC control on bank control Reactor coolant system pressure at 2235 ± 50 psig; coolant system temperature at 547 ± 5°. Flux signal from one power range channel connected to reactivity signal.	most reactive RCC unit ejected from the fully inserted RCC banks, with the RCC configuration which occurs at zero power; determines the just critical boron concentration with the most reactive rod fully withdrawn; and determines the neutron flux distribution at essentially zero power with the most reactive rod fully withdrawn. A reference flux map is taken with the most reactive rod in bank. The lift coils of all rods in the bank, except the most reactive one, are then disconnected. The rod is then slowly withdrawn compensating for the reactivity added with boron. The worth of the rod, the boron end- point, and the flux maps are taken with the rod in the ejected position as in startup tests SU-7.3, SU-7.4, and SU-7.5.
SU-7.7 Minimum Shutdown Verification and Stuck Rod Worth Measurement	Reactor just critical at zero power. All control banks are fully inserted and all shutdown banks and the part-length bank are fully withdrawn. Reactor coolant system pressure at 2235 ± 50 psig; coolant system temperature at 547 ± 5°F. RCC control on bank control. Flux signal from one power range channel connected to the reactivity computer.	The test verifies the minimum shutdown boron concentration with the most reactive RCC unit fully withdrawn and all other full length RCC units fully inserted. All rod banks are inserted into the core while boron is being diluted until shutdown bank A is just a few steps withdrawn and the most reactive RCCA is fully withdrawn. The boron is allowed to mix thoroughly and the boron concentration end point is determined. The plant is brought back to zero power with all shutdown banks withdrawn and all control banks inserted.

TABLE 14.1-2 (Sheet 7)

LIST OF STARTUP TESTS UNIT 1

Title of Test	Test Prerequisites	Summary of Testing and Acceptance Criteria
SU-1.0 Plant Measurements-Operational and Baseline Data.	Reactor core loaded in preparation for startup testing.	The test implements a program of gathering and analyzing baseline and operational data. Radiation surveys are performed at various steps du ing the power escalation to determine radiation dose-levels at preselected locations throughout the plant to evaluate the adequacy of plant shielding. A chemical and radio- chemical program of sampling and analysis will be implemented coincident with core loading. Specified analyses will be performed at major steps of the startup program to gather baseline chemical/radiochemical data and to demonstrate that plant water chemistry requirements can be maintained. Coincident with initial criticality, and effluent monitoring and analysis program will be implemented to ensure that plant effluents potentially containing radioactive materials are monitored and the effluent monitors are calibrated and operational.
SU-8.1 Power Coefficient and Integral Power Defect Measurements During Power Level Increase.	Plant at power level specified by startup sequence (SU-7.1). RCC banks positioned as required by starting sequence. RCC selector on manual control. Reactivity computer input flux signal is sum of power range channels through isolation amplifier.	The test measures the differential power coefficient of reactivity and measures the integral power defect. The generator electrical load is decreased and increased at a rate of approximately one-percent power is adjusted to match the gen-erator load by moving the controlling RCC banks. These movements are recorded on the reactivity computer. The total reactivity added divided by power increase is the differential power coefficient of reactivity.
SU-8.2 RCCA Pseudo Ejection and RCCA Above Bank Position Measurements	Reactor at stable power level as specified in startup sequence (SU-7.1). RCC bank configurations	The test determines the neutron flux distribution and temperature distribution with an RCCA unit above bank; demonstrates

TABLE 14.1-2 (Sheet 8)

LIST OF STARTUP TESTS UNIT 1

Title of Test	Test Prerequisites	Summary of Testing and Acceptance Criteria
	as required by startup sequence. Equilibrium xenon established prior to initiation of test. RCC selector on bank control.	the excore instrumentation response to an RCCA unit above bank, and determines the neutron flux distribution and temperature distribution when an RCCA unit has been "ejected" from the controlling RCC configuration. With the plant at the power level specified in the startup sequence, a reference flux map is taken with the rods in a normal configuration. A selected RCCA is moved out of the core by disconnecting the lift coils on the banks and lifting the one rod which has not been disconnected. Thermocouple maps, excore detector currents, flux maps, boron data, and calorimetric data are taken with the rod out of bank. The core is then returned to initial conditions.
SU-8.3 Static RCCA Drop and RCCA Below Bank Position Measurements	Reactor at stable power level as specified in startup sequence (SU-7.1). RCC bank configuration as required by startup sequence. Equilibrium xenon established prior to initiation of test. RCC selector on bank control.	The test obtains thermocouple maps partial moveable detector (M/D) maps, and excore detector response with an RCCA below bank position Thermocouple maps, partial M/D maps, and excore detector response for the dropped rod configuration are also obtained. The test is performed in a similar fashion to the rod above bank position measurement (SU-8.2) except the RCCA is diluted into the core instead of withdrawal by boration.
SU-8.4 Incore - Exore Detector Calibration	Plant is stable at power level specified in startup sequence (SU-7.1). RCC selector is on manual control Controlling RCC bank positioned as required by startup sequence.	The test determines a relationship between incore and excore generated axial offsets and I. Moveable detector maps, excore detector currents, thermocouple maps, and Calorimetric data are taken with the reactor having an axial power imbalance ranging from zero to large negative and positive values. The axial offsets are accomplished by a xenon oscillation initiated by bank D. From the

TABLE 14.1-2 (Sheet 9)

LIST OF STARTUP TESTS UNIT 1

Title of Test	Test Prerequisites	Summary of Testing and Acceptance Criteria
		data taken, the relationship between the excore and incore detectors is determined and the offset
and circuits are calibrated.		
SU-8.5 Nuclear and Temperature Instrumentation Calibration and Thermal Power Measurement	The Nuclear Instrumentation System is aligned for 100 percent power. Sensor for measuring feedwater temperature to each steam generator shall be installed, independent of the signals to the computer. The plant will be at various power levels.	The objectives of this test are to obtain data for: 1) Determining nuclear instrumentation channel overlap; 2) Verifying linearity and uniform detector outputs under flat power conditions; 3) Determining operational settings of instrument compensating voltages and test current values; 4) Setting power and intermediate range detector voltages; 5) Calculating thermal power in order to set power range channels; 6) Aligning WT and WT average instrumentation; 7) Setting overtemperature and overpower WT instrument trip points; 8) Verifying calibration of RTD's under isothermal conditions and determining installation corrections for each RTD for use in calibrating process instrumentation. The detector trip setpoints are initially set at conservative values.

TABLE 14.1-2 (Sheet 10)

LIST OF STARTUP TESTS UNIT 1

Title of Test	Test Prerequisites	Summary of Testing and Acceptance Criteria
		After initial criticality and during escalation into the intermediate and power ranges, detector currents are taken to verify overlap between the source, intermediate, and power range channels. This data is collected until the overlaps are firmly established. During low power escalation, the power range detector currents are monitored and compared with the intermediate range currents to verify response of the power range detectors. The power range channels will be calibrated based on a calorimetric measurement across the steam generator. The power delivered by each steam generator will be determined by measurement of feed-water flow, feedwater temperature, and steam pressure. WT and WT setpoints are established by comparing WT incore with the RTD readings at isothermal conditions. The WT instrumentation is set at 0.0°F in this case.
SU-9.1 Load Swing Tests	The following systems have been checked and placed in automatic control: 1) Reactor rod control 2) Steam generator level control 3) Pressurizer pressure control 4) Pressurizer level control 5) Steam dump control (T average mode) All control rods positioned as specified in the startup sequence (SU-7.1). Plant must be	The objective of this test is to verify the nuclear plant transient response, including automatic control systems performance, when step-load changes are introduced at the turbine generator. Step-load changes will be initiated from steady-state conditions at approximately 30-percent, 75-percent, and 100-percent power. The plant is at steady-state conditions and the turbine governor valves are rapidly repositioned for a 10-percent load decrease. Plant parameters are monitored on high-speed strip chart recorders. A new equilibrium condition is reached and the load is increased back to the

TABLE 14.1-2 (Sheet 11)

LIST OF STARTUP TESTS UNIT 1

Title of Test	Test Prerequisites	Summary of Testing and Acceptance Criteria
	able to deliver 30 percent, 75 percent, or 100 percent of rated capacity as required.	original condition. The recordings are analyzed for control systems behavior, and requirements for realignment.
SU-9.3 Large Load Reduction Tests	The following systems have been checked and placed in automatic control: 1) Reactor Rod Control System 2) Pressurizer Level Control System 3) Pressurizer Pressure Control System 4) Steam Generator Level Control System 5) Steam Pump Control System (T average control mode)	The objectives of this test are: 1) To verify the ability of the primary and secondary plant and the Automatic Reactor Control Systems to sustain a 50-percent step-load reduction from 75-percent and 100-percent of full power 2) To evaluate the interaction between the control systems 3) To evaluate test data to determine if possible setpoint changes are required in the control systems in order to improve transient response.
SU-9.3 Large Load Reduction Tests	The plant is in steady-state condition at the required power level with controlling bank positioned as required by SU-7.1.	These tests are performed to determine mine if the reactor or turbine will trip and to verify that safety valves do not lift, turbine speed responds normally, and the steam dump system functions correctly. The turbine governor valves are repositioned for a 50-percent load change. Plant parameters are recorded on a high- speed strip chart recorder.
SU-9.4 Plant Trip From 100 Percent Power	Plant is a 100 percent power with control bank D positioned as required by SU-7.1. The following	This test is performed in two parts with each part being a separate test. Part A

TABLE 14.1-2 (Sheet 12)

LIST OF STARTUP TESTS UNIT 1

Title of Test	Test Prerequisites	Summary of Testing and Acceptance Criteria
	systems are functioning properly and have been placed in automatic control: 1) Rod Control System; 2) Steam Generator Level Control System; 3) Pressurizer Pressure Control System; 4) Pressurizer Level Control System; 5) Steam Dump Control System (T average control mode).	The objectives of this test are: 1) To verify capability of the primary and secondary plant to sustain a trip from 100 percent power and to bring the plant to stable conditions following the transient; 2) To determine the overall response time of the reactor coolant hot leg RTD's; and 3) To evaluate the data resulting from this test to determine possible changes in control system setpoints in order to improve transient response. The plant is tripped from a steady-state, 100-percent power level by manually tripping the turbine. The following criteria will be used to determine successful test completion. 1) Pressurizer and steam generator safety valves do not lift; 2) Safety injection is not initiated and turbine trips; 3) The overall RTD response time does not exceed a specified time; 4) Nuclear Flux drops to 15 percent within 2.5 seconds after turbine trip 5) All full-length RCCA's release and drop. Part B 1) To verify the ability of the automatic control and protection systems to sustain a net electrical load loss without exceeding turbine design overspeed; 2) To evaluate the data resulting from this test to determine

TABLE 14.1-2 (Sheet 13)

LIST OF STARTUP TESTS UNIT 1

Title of Test	Test Prerequisites	Summary of Testing and Acceptance Criteria
		possible changes in control system setpoints in order to improve transient responses. The main generator breakers are opened with the plant at 100 percent steady state power. The following criteria will be used to determine successful completion of the test. 1) The turbine will not exceed the manufacturer's design overspeed. 2) Safety injection is not initiated.
SU-9.5 Rod Group Drop and Plant Trip	The plant shall be operating at a steady-state level of 50 percent.	This test is to confirm that the negative rate trip circuit will trip the reactor as a result of dropping two rods in a group that is most difficult to detect by the power range detectors. Also, to obtain preliminary data for systems response to plant trip before performing the turbine trip and reactor trip from 100 percent.
SU-1.0 Plant Measurements Operational and Baseline Data	See test description under Phase II testing.	
SU-1.1 Loss of Offsite Power	Power level greater than or equal to 10% rated generator output. The following are ready for emergency start: 1) Emergency diesel generators 2) Auxiliary feedwater pumps The reactor protection and safe-guards systems are fully operational.	This test demonstrates the ability of the reactor systems, the reactor control and protection systems, the auxiliary feedwater pumps and the emergency power system to sustain a loss of turbine generator coincident with loss of offsite power and to place the plant in a safe shutdown condition. The offsite power circuits to the primary systems are interrupted, the turbine and reactor are tripped and the auxiliary feedpumps and diesel generators start. Acceptance criteria are: 1) The diesel generators shall start and accept the emergency power system load.

TABLE 14.1-2 (Sheet 14)

LIST OF STARTUP TESTS UNIT 1

Title of Test	Test Prerequisites	Summary of Testing and Acceptance Criteria
		2) Reactor trip and turbine trip shall occur. 3) Auxiliary feedwater pump start.
SU-1.2A Shutdown From Outside the Control Room	Power level shall be greater than or equal to 10% rated generator output Emergency start: 1) Emergency diesel generators 2) Auxiliary feedwater pumps Power level shall be greater than or equal to 10% rated generator output The reactor protection and safe guards systems are fully operational.	This test verifies that following a reactor trip the unit can be maintained in the hot standby condition. The reactor auxiliary feedwater pumps and the emergency power system to sustain a loss of turbine generator coincident with loss of offsite power and to place the plant in a safe shutdown condition. The offsite power circuits to the primary systems are interrupted, the turbine and reactor are tripped and the auxiliary feedpumps and diesel generators start. Acceptance criteria are: 1) The diesel generators shall start and accept the emergency power system load. 2) Reactor trip and turbine trip shall occur. 3) Auxiliary feedwater pump start. This test verifies that following a reactor trip the unit can be maintained in the hot standby condition. The reactor and turbine are tripped from outside the main control room. Other necessary operator action to safely shutdown and maintain the plant are done from the auxiliary control room or from local control points. The acceptance criteria from this test is successful shutdown of the plant from outside the control room by the normal complement.

TABLE 14.1-2 (Sheet 15)

LIST OF STARTUP TESTS UNIT 1

Title of Test	Test Prerequisites	Summary of Testing and Acceptance Criteria
SU-1.2B Cooldown from Outside the Control Room	Plant in Mode 3 at 547°F. Unit control is from the main control room with the unit in a stable condition. This prerequisite may be disregarded if this test is to follow immediately after performing SU-1.2A.	This test shall verify that the unit can be cooled down through Mode 3 and 50°F into Mode 4 from outside the main control room. The demonstration of remote cooldown need not be performed in conjunction with the remote shutdown demonstration. It will be performed when most convenient situation arises.
SU-10.1 NSSS Acceptance Test	The plant is at 100-percent power. All preoperational tests have been completed. All startup physics testing is complete.	The NSSS is operated for 300 continuous hours at rated thermal output to verify that the plant is acceptable. Operation of plant systems and components are verified and monitored during this time period.
SU-10.2 Steam Generator Moisture Carryover Measurement	The Power level is at 100% of full power.	The test objective is to determine the moisture carryover performance of the steam generators. This measurement is obtained by using Sodium-24 as the source. The acceptance criteria is that the moisture carryover measured be less than or equal to the warranted value of .25% by weight.
*Automatic Steam Generator Level Control	See Table 14.1-1	
*Dynamic Automatic Steam Dump Control	See Table 14.1-1	
*Calibration of Steam and Feed water Flow Instrumentation at Power	See Table 14.1-1	

*Preoperational tests completed during startup test program.

TABLE 14.1-3 (Sheet 1)

LIST OF STARTUP TESTS UNIT 2

Title of Test	Test Prerequisites	Test Objectives Summary of Testing and Acceptance Criteria
I. Core-Loading Program		
SU-6.2 Core-Loading Prerequisites	Hot functional test program completed. Plant being readied for core loading.	The objective of this instruction is to ensure the operability of equipment and systems necessary for a safe and expeditious core loading. Temporary neutron monitoring channels to be utilized during core loading will be checked and demonstrated to be operable.
SU-6.3 Reactor Systems Sampling Prior to and During Core Loading	Reactor vessel head removed and vessel water level is above the centerline of the outlet nozzles in preparation for core loading. Reactor cooling system and connected auxiliary systems have been borated to specified concentrations. The CVCS System, RHR System, Safety Injection System, and component cooling system are in service with RHR System circulating coolant through the vessel.	The test verifies correct and uniform boron concentration, prior to core loading, in all parts of the reactor coolant system and directly connected auxiliary systems and verifies equipment status and plant conditions during core loading to ensure that planned conditions are being maintained.
SU-6.1 Initial Core Loading	Nuclear instrumentation and communications required for core loading installed and verified operational. Reactor vessel is ready to receive fuel and required fuel handling tools are available for use. Startup test SU-6.2 has been completed and RHR System is in service. Equipment door and at least one door in each personnel	The instruction establishes the conditions under which installation of the initial nuclear fuel charge is to be accomplished and specifies the sequence of events which constitutes the initial core-loading program. The instruction includes a core-loading sequence which specifies the loading in a step-by-step fashion with the appropriate precautions and

TABLE 14.1-3 (Sheet 2)

LIST OF STARTUP TESTS UNIT 2

Title of Test	Test Prerequisites	Test Objectives Summary of Testing and Acceptance Criteria
	airlock are closed. At least one flow path for emergency boration is available. All required preloading tests have been completed and the requirements of SU-6.3 have been satisfied.	prerequisites for each step listed.
II. Precritical Testing (Tests to be completed after Core Loading)		
Preoperational Tests:		
Pressurizer Spray and Heater Capability and Continuous Spray Flow Setting	See Table 14.1-1	
Reactor Coolant System Flow Measurement	See Table 14.1-1	
Reactor Coolant Flow Coastdown	See Table 14.1-1	
Resistance Temperature Detector Bypass Loop Flow Verification	See Table 14.1-1	
Rod Drive Mechanism Timing	See Table 14.1-1	
Rod Control System	See Table 14.1-1	
Rod Drop Time Measurements	See Table 14.1-1	
Rod Position Indication System	See Table 14.1-1	
Incore Movable Detectors	See Table 14.1-1	
Adjustment to Reactor and Turbine Control Systems	See Table 14.1-1	

TABLE 14.1-3 (Sheet 3)

LIST OF STARTUP TESTS UNIT 2

Title of Test	Test Prerequisites	Test Objectives Summary of Testing and Acceptance Criteria
STARTUP TESTS		
SU-1.0 Plant Measurements- Operational and Baseline Data	Reactor Core loaded in pre- paration for startup testing.	The test implements a program of gathering and analyzing baseline and operational data. Radiation surveys are performed at various steps during the power escalation to determine radiation dose-levels at preselected locations throughout the plant to evaluate the adequacy of plant shielding. A chemical and radiochemical program of sampling and analysis will be implemented coincident with core loading. Specified analyses will be performed at major steps of the startup program to gather baseline chemical/radiochemical data and to demonstrate that plant water chemistry requirements can be maintained. Coincident with initial criticality an effluent monitoring and analysis program will be implemented to ensure that plant effluents potentially containing radioactive materials are monitored and the effluent monitors are calibrated and operational.
III. Initial Criticality and Low Power Testing		
SU-7.1 NSSS Startup Sequence	Installation of nuclear steam sup- ply system, all components of tur- bine steam system, and supporting control and auxiliary systems is complete. All pre-operational testing except as outlined in this sequence shall have been success- fully completed or specifically waived for this sequence of tests. Reactor Coolant System at ambient temperature and borated to required concentration. Adequate makeup	This instruction prescribes the se- quence of operations constituting the plant startup testing program. The sequence of operations is pre- sented in tabular form as the NSSS Startup Sequence, in which detailed instructions, specific plant condi- tions, and test procedures are in- cluded.

TABLE 14.1-3 (Sheet 4)

LIST OF STARTUP TESTS UNIT 2

Title of Test	Test Prerequisites	Test Objectives Summary of Testing and Acceptance Criteria
	water available for extensive dilution. Concentrated boric acid available in sufficient quantity for extensive boration. All special test equipment required for this testing sequence is available and operational.	
SU-7.2 Initial Criticality	Plant at hot shutdown with at least 2000 ppm boron in the RCS. The source and intermediate range nuclear instrumentation channels are operational with 3 of 4 power range channels in operation.	The objective is to bring the reactor critical for the first time from the plant conditions specified. All rods are withdrawn except the last controlling group, which is left partially inserted for control once criticality is achieved by boron dilution. At preselected points in rod withdrawal and boron dilution, data is taken and inverse count rate plots made to enable extrapolating to the expected critical point. When the inverse count rate ratio reaches a preselected value, dilution is stopped and the system allowed to mix. If criticality is not achieved during mixing, bank D control rods are withdrawn until criticality is achieved.
SU-7.3 Nuclear Design Check Tests	Plant at zero power. These tests are run as part of the zero power physics test program. The RCC control selector switch is on bank control. The temperature is 547 ± 5°F and pressure is	The test establishes the boron concentration endpoint with various rod configurations, determines the isothermal temperature coefficient of reactivity, and determines the neutron flux distribution at various

TABLE 14.1-3 (Sheet 5)

LIST OF STARTUP TESTS UNIT 2

Title of Test	Test Prerequisites	Test Objectives Summary of Testing and Acceptance Criteria
	2235 ± 50 psig.	rod distributions. partially inserted. The rod is then quickly pulled and reinserted with no boron adjustment. The change in reactivity is measured and the end-point calculated. The isothermal moderator temperature coefficient is determined by heating the coolant system at a constant rate and then cooling down at a constant rate. The total temperature swing is about 5°F. The temperature versus reactivity is plotted and the slope of the lines generated is the isothermal moderator temperature coefficient. The neutron flux distribution is determined by inserting miniature flux detectors into core locations with the flux indicated on strip chart recorders.
*SU-7.4 Rod and Boron Worth Measurements During Boron Dilution *SU-7.5 Rod and Boron Worth Measurements During Boron Addition	Reactor just critical at zero power. Rod banks positioned as specified in startup sequence (SU-7.1). RCC control on bank control. Reactor coolant system pressure at 2235 ± 50 psig; coolant system temperature at 547 ± 5°F. Flux signal from one power range detector connected to reactivity computer.	The test determines the differential and integral worth of the RCC banks, and determines the differential boron worth over the range of the RCC banks. The nuclear design predictions for Rod Cluster Control Assembly (RCCA) group differential worths are validated. Rods are inserted or withdrawn as boron is constantly added

TABLE 14.1-3 (Sheet 6)

LIST OF STARTUP TESTS UNIT 2

Title of Test	Test Prerequisites	Test Objectives Summary of Testing and Acceptance Criteria
*Test Objectives, Summary of Testing, and Acceptance Criteria applies for both SU-7.4 and SU-7.5		or diluted. The worth of the rods is compensated for by boron. Rod movement will cause step changes in reactivity which are measured on a reactivity computer. Differential boron worth measurement are made by increasing or decreasing reactor coolant boron concentration. Compensation for reactivity effect of boron concentration change will be made by withdrawing or inserting, respective control rods to maintain moderator average temperature and power level constant and observing the result-and accumulated change in core reactivity corresponding to these succesive rod movements. Both of these measurements are done simultaneoulsy.
SU-7.7 Minimum Shutdown Verification and Stuck Rod Worth Measurement	Reactor just critical at zero power. All control banks are fully inserted and all shutdown banks are fully withdrawn. Reactor coolant system pressure at 2235 ± 50 psig; coolant system temperature at 547 ± 5°F. Flux signal from one power range channel connected to the reactivity computer.	The test verifies the minimum shutdown boron concentration with the most reactive RCC unit fully withdrawn and all other full length RCC units fully inserted. All rod banks are inserted into the core while boron is being diluted until shutdown bank A is just a few steps withdrawn and the most reactive RCCA is fully withdrawn. The boron

TABLE 14.1-3 (Sheet 7)

LIST OF STARTUP TESTS UNIT 2

Title of Test	Test Prerequisites	Test Objectives Summary of Testing and Acceptance Criteria
		is allowed to mix throughly and the boron concentration end point is determined. The plant is brought back to zero power with all shutdown banks withdrawn and all control banks inserted.
SU-1.0 Plant Measurements-Operational and Baseline Data.	Reactor core loaded in preparation for startup testing.	The test implements a program of gathering and analyzing baseline and operational data. Radiation surveys are performed at various steps during the power escalation to determine radiation dose-levels at preselected locations throughout the plant to evaluate the adequacy of plant shielding. A chemical and radiochemical program of sampling and analysis will be implemented coincident with core loading. Specified analyses will be performed at major steps of the startup program to gather baseline chemical/radiochemical data and to demonstrate that plant water chemistry requirements can be maintained. Coincident with initial criticality, and effluent monitoring and analysis program will be implemented to ensure that plant effluents potentially containing radioactive materials are monitored and the effluent monitors are calibrated and operational.
	Reactor core loaded in preparation for startup testing.	
IV. Power Level Escalation Testing		

TABLE 14.1-3 (Sheet 8)

LIST OF STARTUP TESTS UNIT 2

Title of Test	Test Prerequisites	Test Objectives Summary of Testing and Acceptance Criteria
SU-8.1 Power Coefficient and Integral Power Defect Measurements During Power Level Increase (cont'd.)	Plant at power level specified by startup sequence (SU-7.1). RCC banks positioned as required by starting sequence. RCC selector on manual control. Reactivity computer input flux signal is sum of power range channels through isolation amplifier. erator load by moving the controlling RCC banks. These movements are recorded on the reactivity computer. The total reactivity added divided by power increase is the eifferential power coefficient of reactivity.	The test measures the differential power coefficient of reactivity and measures the integral power defect. The generator electrical load is decreased and increased at a rate of approximately one-percent per minute. The reactor power is adjusted to match the gen-
SU-8.3 Static RCCA Drop and RCCA Below Bank Position Measurements	Reactor at stable power level as specified in startup sequence (SU-7.1). RCC bank configuration as required by startup sequence. Equilibrium xenon established prior to initiation of test. RCC selector on bank control.	The test obtains thermocouple maps partial moveable detector (M/D) maps, and excore detector response with an RCCA below bank position Thermocouple maps, partial M/D maps, and excore detector response forthe dropped rod configuration are also obtained. With the plant at the power level specified in the startup sequence, a reference flux map is taken with the rods in a normal configuration. A selected RCCA is moved into the core by disconnecting the lift coils on the bank and inserting the one rod which has not been disconnected. During the rod insertion, a reactor coolant boron dilution is used to compensate for temperature changes.
SU-8.4 Incore - Exore Dectector Calibration	Plant is stable at power level specified in startup sequence (SU-7.1). RCC selector is on manual control Controlling RCC bank	The test determines a relationship between incore and excore generated axial offsets and I. Moveable detector maps, excore detector cur-

TABLE 14.1-3 (Sheet 9)

LIST OF STARTUP TESTS UNIT 2

Title of Test	Test Prerequisites	Test Objectives Summary of Testing and Acceptance Criteria
	positioned as required by startup sequence.	rents, thermocouple maps, and Calorimetric data are taken with the reactor having an axial power imbalance ranging from zero to large negative and positive values. The axial off- sets are accomplished by a xenon oscillation initiated by bank D. From the data taken, the relationship between the excore and incore detectors is determined and the offset and I circuits are calibrated.
SU-8.5 Nuclear and Temperature Instrumentation Calibration and Thermal Power Measurement	The Nuclear Instrumentation System is aligned for 100 percent power. Sensor for measuring feedwater temperature to each steam generator shall be installed, independent of the signals to the computer. The plant will be at various power levels.	The objectives of this test are to obtain data for: 1) Determining nuclear instrumentation channel overlap; 2) Verifying linearity and uniform detector outputs under flat power conditions; 3) Determining operational settings of instrument compensating voltages and test current values; 4) Setting power and intermediate range detector voltages; 5) Calculating thermal power in order to set power range channels; 6) Aligning WT and WT average instrumentation; 7) Setting overtemperature and overpower WT instrument trip points; 8) Verifying calibration of RTD's under isothermal conditions and determining installation corrections for each RTD for use in calibrating process instrumentation.

TABLE 14.1-3 (Sheet 10)

LIST OF STARTUP TESTS UNIT 2

Title of Test	Test Prerequisites	Test Objectives Summary of Testing and Acceptance Criteria
		The detector trip setpoints are initially set at conservative values. After initial criticality and during escalation into the intermediate and power ranges, detector currents are taken to verify overlap between the source, intermediate, and power range channels. This data is collected until the overlaps are firmly established. During low power escalation, the power range detector currents are monitored and compared with the intermediate range currents to verify response of the power range detectors. The power range channels will be calibrated based on a calorimetric measurement across the steam generator. The power delivered by each steam generator will be determined by measurement of feed-water flow, feedwater temperature, and steam pressure. WT and WT setpoints are established by comparing WT incore with the RTD readings at isothermal conditions. The WT instrumentation is set at 0.0°F in this case.
SU-9.1 Load Swing Tests	The following systems have been checked and placed in automatic control: 1) Reactor rod control 2) Steam generator level control 3) Pressurizer pressure control 4) Pressurizer level control 5) Steam dump control (T average mode)	The objective of this test is to verify the nuclear plant transient response, including automatic control systems performance, when step-load changes are introduced at the turbine generator. Step-load changes will be initiated from steady-state conditions at approximately 30-percent, 75-percent, and 100-percent power. The plant is at steady-state conditions and the turbine governor valves are rapidly repositioned for a 10-percent load decrease. Plant

TABLE 14.1-3 (Sheet 11)

LIST OF STARTUP TESTS UNIT 2

Title of Test	Test Prerequisites	Test Objectives Summary of Testing and Acceptance Criteria
	All control rods positioned as specified in the startup sequence (SU-7.1). Plant must be able to deliver 30 percent, 75 percent, or 100 percent of rated capacity as required.	parameters are monitored on high-speed strip chart recorders. A new equilibrium condition is reached and the load is increased back to the original condition. The recordings are analyzed for control systems behavior, and requirements for realignment.
SU-9.3 Large Load Reducino Tests	The following systems have been checked and placed in automatic control: 1) Reactor Rod Control System 2) Pressurizer Level Control System 3) Pressurizer Pressure Control System 4) Steam Generator Level Control System 5) Steam Pump Control System (T average control mode) The plant is in steady-state condition at the required power level with controlling bank positioned as required by SU-7.1.	The objectives of this test are: 1) To verify the ability of the primary and secondary plant and the Automatic Reactor Control Systems to sustain a 50-percent step-load reduction from 75-percent and 100-percent of full power 2) To evaluate the interaction between the control systems 3) To evaluate test data to determine if possible setpoint changes are required in the control systems in order to improve transient response. These tests are performed to determine if the reactor or turbine will trip and to verify that safety valves do not lift, turbine speed responds normally, and the steam dump system functions correctly. The turbine governor valves are repositioned for a 50-percent load change. Plant

TABLE 14.1-3 (Sheet 12)

LIST OF STARTUP TESTS UNIT 2

Title of Test	Test Prerequisites	Test Objectives Summary of Testing and Acceptance Criteria
		parameters are recorded on a high-speed strip chart recorder.
SU-9.4 Plant Trip From 100 Percent Power	Plant is a 100 percent power with control bank D positioned as required by SU-7.1. The following systems are functioning properly and have been placed in automatic control: 1) Rod Control System; 2) Steam Generator level Control System; 3) Pressurizer Pressure Control System; 4) Pressurizer Level Control System; 5) Steam Dump Control System (T average control mode).	The objectives of this test are: 1) To verify capability of the primary snd secondary plant to substain a trip from 100 percent power and to bring the plant to stable conditions following the transient; 2) To determine the overall response time of the reactor coolant hot leg RTD's; and 3) To evaluate the data resulting from this test to determine possible changes in control system setpoints in order to improve transient response. The plant is tripped from a steady-state, 100-percent power level by manually tripping the turbine. The following criteria will be used to determine successful test completion. 1) Pressurizer and SG safety valves do not lift; 2) Safety injection is not initiated and turbine trips; 3) The overall RTD response time does not exceed a specified time; 4) Nuclear Flux drops to 15 percent within 2.5 seconds after turbine trip 5) All full-length RCCA's release and drop.
SU-1.0 Plant Measurements Operational and	See test description under Phase II testing.	

TABLE 14.1-3 (Sheet 13)

LIST OF STARTUP TESTS UNIT 2

Title of Test	Test Prerequisites	Test Objectives Summary of Testing and Acceptance Criteria
Baseline Data		
SU-1.2A Shutdown From Outside the Control Room	Power level shall be greater than or equal to 10% rated generator output Emergency start: 1) Emergency diesel generators 2) Auxiliary feedwater pumps The reactor protection and safeguards systems are fully operational.	This test verifies that following a reactor trip the unit can be maintained in the hot standby condition. The reactor auxiliary feedwater pumps and the emergency power system to sustain a loss of turbine generator coincident with loss of offsite power and to place the plant in a safe shutdown condition. The offsite power circuits to the primary systems are interrupted, the turbine and reactor are tripped and the auxiliary feedpumps and diesel generators start. Acceptance criteria are: 1) The diesel generators shall start and accept the emergency power system load. 2) Reactor trip and turbine trip shall occur. 3) Auxiliary feedwater pump start.
SU-1.2A Shutdown From Outside the Control Room	Power level shall be greater than or equal to 10% rated generator output	This test verifies that following a reactor trip the unit can be maintained in the hot standby condition. The reactor and turbine are tripped from outside the main control room. Other necessary operator action to safely shutdown and maintain the plant are done from the auxiliary control room or from local control points.

TABLE 14.1-3 (Sheet 14)

LIST OF STARTUP TESTS UNIT 2

Title of Test	Test Prerequisites	Test Objectives Summary of Testing and Acceptance Criteria
		The acceptance criteria from this test is successful shutdown of the plant from outside the control room by the normal complement.
SU-10.1 NSSS Acceptance Test	The plant is at 100-percent power. All preoperational tests have been completed. All startup physics testing is complete.	The NSSS is operated for 300 continuous hours at rated thermal output to verify that the plant is acceptable. Operation of plant systems and components are verified and monitored during this time period.
SU-10.2 Steam Generator Moisture Carryover Measurement	The Power level per SU 7.1.	The test objective is to determine the moisture carryover performance of the steam generators. This measurement is obtained by using Sodium-24 as the source. The acceptance criteria is that the moisture carryover measured be less than or equal to the warranted value of 0.25% by weight.
*Automatic Steam Generator Level Control	See Table 14.1-1	
*Dynamic Automatic Steam Dump Control	See Table 14.1-1	
*Calibration of Steam and Feed-water Flow Instrumentation at Power	See Table 14.1-1	

*Preoperational tests completed during startup test program.

Test Program Parts	Test Program Categories
1. Installed Equipment Inspection Program	Construction Test Program
2. Cleaning and Flushing Program	
3. Integrity Test Program	
4. Equipment Checkout, Operation, and Adjustment	
5. System Functional Test Program	Preoperational Test Program
6. Core Loading Program	Startup Test Program
7. Initial Criticality and Low Power Physics Program	
8. At Power Physics and Core Performance Measurements Program	
9. Transient Test Program	
10. Plant Acceptance Test Program	

Figure 14.1-1 Organization of Initial Testing Program

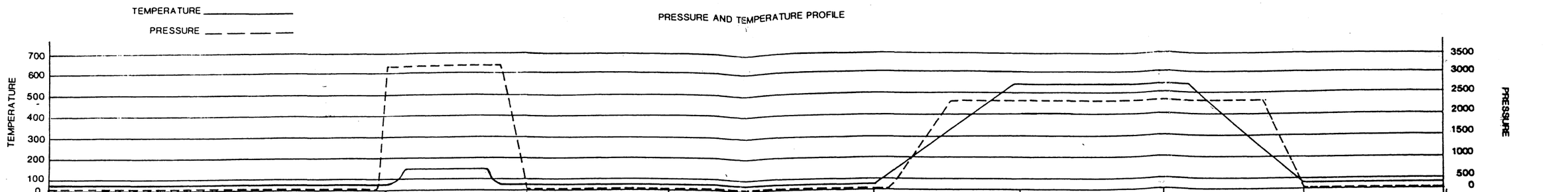

RCS COMPLETION AND EQUIPMENT INSTALLATION	RCS CLEANING, INITIAL RCS FILL, AND SERVICE SYSTEMS CHECKOUT	COLD FUNCTIONAL TESTING	CONTAINMENT TESTS	PREPARATION FOR HOT FUNCTIONAL TESTING	RCS HEATUP	INTEGRATED HOT FUNCTIONAL TESTING	RCS COOLDOWN	PREPARATION FOR CORE LOADING
1. OFFSITE POWER SYSTEM	1. AUXILIARY BUILDING HEATING, VENTILATING, AND AIR CONDITIONING	1. RCS AND ASSOCIATED SYSTEMS HYDROSTATIC TESTING	1. AIR RETURN FANS	1. PRESSURIZER RELIEF TANK	1. RCS HEATUP	1. RCS AT TEMPERATURE	1. RCS COOLDOWN	1. FUEL TRANSFER SYSTEM
2. ONSITE AC DISTRIBUTION SYSTEM	2. LIQUID WASTE DRAINS, COLLECTION AND TRANSFER FACILITIES	2. SPENT FUEL PIT COOLING SYSTEM	2. CONTAINMENT ISOLATION SYSTEM	2. RCS HEATUP	2. RCS THERMAL EXPANSION	2. CVCS FUNCTIONAL TEST	2. RHR SYSTEM	2. NUCLEAR INSTRUMENTATION SYSTEM
3. PREOP TESTING OF COMPUTER HARDWARE	3. PRIMARY MAKEUP WATER SYSTEM	3. CONTAINMENT ISOLATION SYSTEM	3. AIRLOCK LEAKAGE AND OPERATIONAL TEST	3. RHR SYSTEM	3. RHR SYSTEM	3. STEAM DUMP CONTROL	3. THERMAL EXPANSION OF AUXILIARY SYSTEM	3. SAFETY INJECTION SYSTEM
4. ENVIRONS MONITORING SYSTEM	4. STATION DRAINAGE SYSTEM	4. ELECTROHYDRAULIC CONTROL SYSTEM	4. UPPER CONTAINMENT VENTILATION SYSTEM	4. RCS THERMAL EXPANSION	4. INCORE THERMOCOUPLE AND RTD CROSS CALIBRATION	4. INITIAL TURBINE ROLL	4. RCS THERMAL EXPANSION	4. RCS POST HOT FUNCTIONAL TESTING, INSPECTION, CLEANING, AND TESTING
5. EMERGENCY LIGHTING SYSTEM	5. CONTROL AIR SYSTEM	5. MAIN FEEDWATER SYSTEM	5. LOWER CONTAINMENT SYSTEM	5. CONDENSER CIRCULATING WATER SYSTEM	5. CONTAINMENT ISOLATION SYSTEM	5. ICE CONDENSER SYSTEM		5. REACTOR PROTECTION TIME RESPONSE
6. VITAL 120-V AC POWER SYSTEM	6. NITROGEN SUPPLY SYSTEM	6. SAMPLING SYSTEM	6. CONTAINMENT SPRAY SYSTEM	6. COMPONENT COOLING SYSTEM	6. THERMAL EXPANSION OF AUXILIARY SYSTEMS	6. SAMPLING SYSTEM		6. REACTOR PROTECTION OPERATIONAL TEST
7. VITAL 125-V DC POWER SYSTEM	7. COMPRESSED AIR SYSTEM	7. AUXILIARY FEEDWATER	7. POST-LOCA HYDROGEN RECOMBINER	7. ESSENTIAL RAW COOLING WATER SYSTEM	7. EVACUATION ALARM SIGNAL	7. STEAM GENERATOR BLOWDOWN SYSTEM		7. REACTOR PLANT SYSTEM SETPOINT VERIFICATION
8. EMERGENCY SOUND POWERED TELEPHONES	8. HYDROGEN SUPPLY SYSTEM	8. MAIN STEAM SYSTEM	8. CONTAINMENT VESSEL PRESSURE AND LEAK TEST	8. ONSITE AC AND DC DISTRIBUTION SYSTEM	8. AUXILIARY FEEDWATER SYSTEM	8. AUXILIARY FEEDWATER SYSTEM		8. SAFEGUARDS SYSTEM OPERATIONAL TEST
9. STATUS MONITORING SYSTEM	9. CONTROL BUILDING HEATING, VENTILATING, AND AIR CONDITIONING	9. STEAM DUMP CONTROL	9. SHIELD BUILDING INLEAKAGE RATE TEST, EMERGENCY GAS TREATMENT SYSTEMS FUNCTIONAL TESTS	9. CONDENSER VENT SYSTEM	9. VIBRATION MONITORING TEST	9. INCORE THERMOCOUPLE AND RTD CROSS-CALIBRATION		9. COMPUTER DATA PRINTOUT VERIFICATION
10. REACTOR COOLANT PRESSURE BOUNDARY LEAKAGE DETECTION SYSTEM	10. CONTAINMENT ISOLATION SYSTEM	10. CONTROL SYSTEM TEST FOR TURBINE RUNBACK		10. CONTROL ROD DRIVE COOLING SYSTEM		10. CONTAINMENT ISOLATION SYSTEM		10. UPPER HEAD INJECTION SYSTEM
	11. ESSENTIAL RAW COOLING WATER SYSTEM	11. ANNUNCIATOR ALARM SYSTEM		11. DIESEL GENERATOR AND SUPPORTING AUXILIARIES		11. BORIC ACID SYSTEM		11. FLOOD PROTECTION PROVISIONS
	12. COMPONENT COOLING WATER SYSTEM	12. BORIC ACID SYSTEM		12. THERMAL EXPANSION OF PIPING SYSTEMS		12. MAIN STEAM SYSTEM		
	13. AREA RADIATION MONITORING SYSTEM	13. BORON RECYCLE SYSTEM		13. CONTAINMENT ISOLATION SYSTEM		13. CONTROL BUILDING HEATING, VENTILATING AND AIR CONDITIONING		
	14. PROCESS RADIATION MONITORING SYSTEM	14. GASEOUS WASTE PROCESSING		14. CONTAINMENT VESSEL PRESSURE AND LEAK TEST		14. AUXILIARY BUILDING HEATING, VENTILATING AND AIR CONDITIONING		
	15. CRANES AND HEAVY EQUIPMENT	15. LIQUID WASTE RECEIPT AND STORAGE		15. AUXILIARY ERCW SYSTEM		15. RCS THERMAL EXPANSION		
	16. EVACUATION ALARM SIGNAL	16. LIQUID WASTE PROCESSING		16. FIRE PROTECTION SYSTEM				
	17. FUEL HANDLING TOOLS AND FIXTURES	17. SOLID WASTE PROCESSING		17. CARBON DIOXIDE SYSTEM				
	18. FUEL TRANSFER SYSTEM							
	19. ANNUNCIATOR EQUIPMENT CHECKOUT							

FIGURE 14.1-2 PREOPERATIONAL TEST SEQUENCE

POWER PROFILE

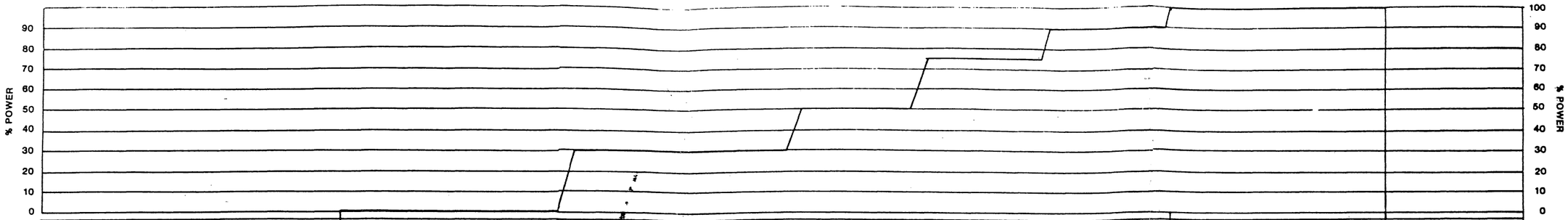

PRECRITICAL TESTS	INITIAL CRITICALITY	LOW POWER PHYSICS TEST	ESCALATION TO 30% POWER	ESCALATION TO 50% POWER	ESCALATION TO 75% POWER	ESCALATION TO 90% POWER	ESCALATION TO 100% POWER	TURBINE TRIP
1. INCORE MOVABLE DETECTOR 2. ROD DRIVE MECHANISM TIMING (COLD & HOT SHUTDOWN) 3. ROD DROP TIME MEASUREMENT (COLD & HOT SHUTDOWN) 4. PRESSURIZER SPRAY AND HEATER CAPABILITY AND CONTINUOUS SPRAY FLOW SETTING 5. REACTOR COOLANT SYSTEM FLOW MEASUREMENT 6. RESISTANCE TEMPERATURE DETECTOR (RTD) BYPASS LOOP FLOW VERIFICATION 7. ROD CONTROL SYSTEM 8. ROD POSITION INDICATION SYSTEM 9. SU-1.0 PLANT MEASUREMENT BASELINE AND OPERATIONAL DATA 10. REACTOR COOLANT FLOW COASTDOWN 11. SU-6.1 INITIAL CORE LOADING 12. SU-6.2 CORE LOADING PREREQUISITES AND PERIODIC CHECKOFF 13. SU-6.3 REACTOR SYSTEM SAMPLING PRIOR TO CORE LOADING 14. SU-8.5 NUCLEAR AND TEMPERATURE INSTRUMENTATION CALIBRATION AND THERMAL POWER MEASUREMENT	1. SU-7.3 INITIAL CRITICALITY 2. SU-1.0 PLANT MEASUREMENTS BASELINE AND OPERATIONAL DATA 3. SU-7.1 NSSS STARTUP SEQUENCE	1. SU-7.3 NUCLEAR DESIGN CHECK TESTS 2. SU-7.4 ROD AND BORON WORTH MEASUREMENTS DURING BORON ADDITION 3. SU-7.5 ROD AND BORON WORTH MEASUREMENTS DURING BORON DILUTION 4. SU-7.6 ROD CONTROL CLUSTER ASSEMBLY (RCCA) PSEUDO EJECTION AT ZERO POWER 5. SU-7.7 MINIMUM SHUTDOWN VERIFICATION AND STUCK ROD WORTH MEASUREMENTS 6. SU-1.0 PLANT MEASUREMENT - BASELINE AND OPERATIONAL DATA 7. SU-8.5 NUCLEAR AND TEMPERATURE INSTRUMENTATION CALIBRATION AND THERMAL POWER MEASUREMENT	1. SU-8.5 NUCLEAR AND TEMPERATURE INSTRUMENTATION CALIBRATION AND THERMAL POWER MEASUREMENT 2. AUTOMATIC REACTOR CONTROL 3. AUTOMATIC STEAM GENERATOR LEVEL CONTROL 4. SU-1.0 PLANT MEASUREMENTS - BASELINE AND OPERATIONAL DATA 5. CALIBRATION OF STEAM AND FEEDWATER FLOW INSTRUMENTATION AT POWER 6. SU-9.1 LOAD SWING TESTS 7. SU-1.1 LOSS OF OFFSITE POWER 8. SU-1.2 SHUTDOWN FROM OUTSIDE CONTROL ROOM 9. SU-8.1 POWER COEFFICIENT AND INTEGRAL POWER DEFECT MEASUREMENT 10. SU-8.2 RCCA PSEUDO EJECTION AND RCCA ABOVE BANK POSITION MEASUREMENT 11. STARTUP ADJUSTMENTS OF REACTOR AND TURBINE CONTROL SYSTEMS	1. SU-8.1 POWER COEFFICIENT AND INTEGRAL POWER DEFECT MEASUREMENTS 2. SU-8.5 NUCLEAR AND TEMPERATURE INSTRUMENTATION CALIBRATION AND THERMAL POWER MEASUREMENT 3. SU-8.3 STATIC RCCA DROP AND RCCA BELOW BANK POSITION MEASUREMENT 4. SU-1.0 PLANT MEASUREMENTS - BASELINE AND OPERATIONAL DATA 5. CALIBRATION OF STEAM AND FEEDWATER FLOW INSTRUMENTATION AT POWER 6. SU-9.5 ROD GROUP DROP AND PLANT TRIP	1. SU-8.1 POWER COEFFICIENT AND INTEGRAL POWER DEFECT MEASUREMENT 2. SU-8.5 NUCLEAR & TEMPERATURE INSTRUMENTATION CALIBRATION AND THERMAL POWER MEASUREMENT 3. SU-8.4 INCORE-EXCORE DETECTOR CALIBRATION 4. SU-9.1 LOAD SWING TESTS 5. SU-9.3 LARGE LOAD REDUCTION TESTS 6. W CALIBRATION OF STEAM AND FEEDWATER FLOW INSTRUMENTATION 7. SU-1.0 PLANT MEASUREMENTS - BASELINE AND OPERATIONAL DATA 8. SU-10.2 STEAM GENERATOR MOISTURE CARRYOVER MEASUREMENT	1. SU-8.1 POWER COEFFICIENT & INTEGRAL POWER MEASUREMENTS DEFECT 2. SU-8.5 NUCLEAR AND TEMPERATURE INSTRUMENTATION CALIBRATION AND THERMAL POWER MEASUREMENT 3. SU-1.0 PLANT MEASUREMENTS - BASELINE AND OPERATIONAL DATA 4. SU-10.2 STEAM GENERATOR MOISTURE CARRYOVER MEASUREMENT	1. SU-8.5 NUCLEAR & TEMPERATURE INSTRUMENTATION CALIBRATION AND THERMAL POWER MEASUREMENT 2. SU-10.1 NSSS ACCEPTANCE TEST 3. SU-10.2 STEAM GENERATOR MOISTURE CARRYOVER MEASUREMENT 4. CALIBRATION OF STEAM AND FEEDWATER FLOW INSTRUMENTATION 5. SU-9.1 LOAD SWING TESTS 6. SU-9.3 LARGE LOAD REDUCTION TESTS 7. SU-9.4 PLANT TRIP FROM 100% POWER 8. SU-1.0 PLANT MEASUREMENTS BASELINE AND OPERATIONAL DATA 9. REACTOR PLANT SYSTEMS SETPOINTS VERIFICATION	

FIGURE 14.1-3 STARTUP TEST SEQUENCE - UNIT 1

POWER PROFILE - UNIT 2

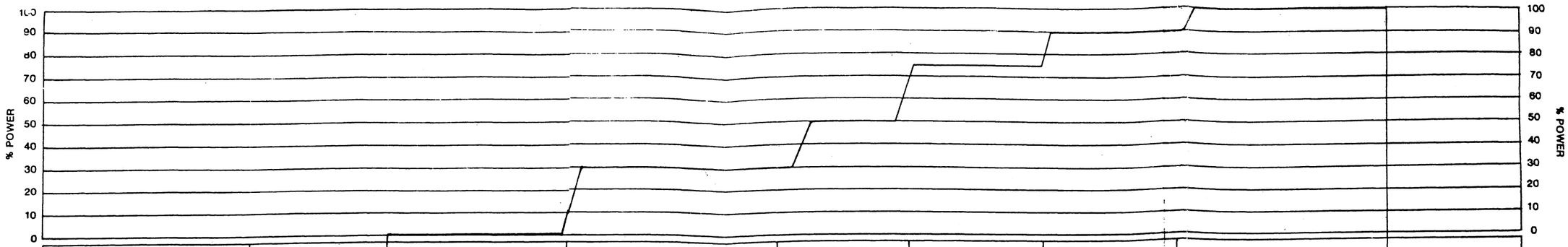

PRECRITICAL TESTS	INITIAL CRITICALITY	LOW POWER PHYSICS TEST	ESCALATION TO 30% POWER	ESCALATION TO 50% POWER	ESCALATION TO 75% POWER	ESCALATION TO 90% POWER	ESCALATION TO 100% POWER	TURBINE TRIP
1. INCORE MOVABLE DETECTOR 2. ROD DRIVE MECHANISM TIMING (COLD AND HOT SHUTDOWN) 3. ROD DROP TIME MEASUREMENT (COLD AND HOT SHUTDOWN) 4. PRESSURIZER SPRAY AND HEATER CAPABILITY AND CONTINUOUS SPRAY FLOW SETTING 5. REACTOR COOLANT SYSTEM FLOW MEASUREMENT 6. RESISTANCE TEMPERATURE DETECTOR (RTD) BYPASS LOOP FLOW VERIFICATION 7. ROD CONTROL SYSTEM 8. ROD POSITION INDICATION SYSTEM 9. SU-1.0 PLANT MEASUREMENT BASELINE AND OPERATIONAL DATA 10. REACTOR COOLANT FLOW COASTDOWN 11. SU-6.1 INITIAL CORE LOADING 12. SU -6.2 CORE LOADING PREREQUISITES AND PERIODIC CHECKOFF 13. SU-6.3 REACTOR SYSTEM SAMPLING PRIOR TO CORE LOADING 14. SU-8.5 NUCLEAR AND TEMPERATURE INSTRUMENTATION CALIBRATION AND THERMAL POWER MEASUREMENT	1. SU-7.2 INITIAL CRITICALITY 2. SU-1.0 PLANT MEASUREMENTS - BASELINE AND OPERATIONAL DATA 3. SU-7.1 NSSS STARTUP SEQUENCE	1. SU-7.3 NUCLEAR DESIGN CHECK TESTS 2. SU-7.4 ROD AND BORON WORTH MEASUREMENTS DURING BORON ADDITION 3. SU-7.5 ROD AND BORON WORTH MEASUREMENTS DURING BORON DILUTION 4. SU-1.0 PLANT MEASUREMENTS-BASELINE AND OPERATIONAL DATA 5. SU-8.5 NUCLEAR AND TEMPERATURE INSTRUMENTATION CALIBRATION AND THERMAL POWER MEASUREMENT 6. SU-7.7 MINIMUM SHUTDOWN VERIFICATION AND STUCK ROD WORTH MEASUREMENT	1. SU-8.5 NUCLEAR AND TEMPERATURE INSTRUMENTATION CALIBRATION AND THERMAL POWER MEASUREMENT 2. AUTOMATIC REACTOR CONTROL 3. AUTOMATIC STEAM GENERATOR LEVEL CONTROL 4. SU-1.0 PLANT MEASUREMENTS BASELINE AND OPERATIONAL DATA 5. CALIBRATION OF STEAM AND FEEDWATER FLOW INSTRUMENTATION AT POWER 6. SU-9.1 LOAD SWING TESTS 7. STARTUP ADJUSTMENTS OF REACTOR AND TURBINE CONTROL SYSTEMS 8. SU-8.1 POWER COEFFICIENT AND INTEGRAL POWER DEFECT MEASUREMENT	1. SU-8.5 NUCLEAR AND TEMPERATURE INSTRUMENTATION CALIBRATION AND THERMAL POWER MEASUREMENT 2. SU-8.3 STATIC RCCA DROP AND RCCA BELOW POSITION MEASUREMENTS 3. SU-1.0 PLANT MEASUREMENTS BASELINE AND OPERATIONAL DATA 4. CALIBRATION OF STEAM AND FEEDWATER FLOW INSTRUMENTATION AT POWER 5. SU-1.2A SHUTDOWN FROM OUTSIDE CONTROL ROOM 6. SU-8.1 POWER COEFFICIENT AND INTEGRAL POWER DEFECT MEASUREMENT	1. SU-8.5 NUCLEAR AND TEMPERATURE INSTRUMENTATION CALIBRATION AND THERMAL POWER MEASUREMENT 2. SU-8.4 INCORE-EXCORE DETECTOR CALIBRATION 3. SU-9.1 LOAD SWING TESTS 4. SU-9.3 LARGE LOAD REDUCTION TESTS 5. CALIBRATION OF STEAM AND FEEDWATER FLOW INSTRUMENTATION 6. SU-1.0 PLANT MEASUREMENTS-BASELINE AND OPERATIONAL DATA 7. SU-10.2 STEAM GENERATOR MOISTURE CARRY-OVER MEASURETURE	1. SU-8.5 NUCLEAR AND TEMPERATURE INSTRUMENTATION CALIBRATION AND THERMAL POWER MEASUREMENT 2. SU-1.0 PLANT MEASUREMENTS-BASELINE AND OPERATIONAL DATA	1. SU-8.5 NUCLEAR AND TEMPERATURE INSTRUMENTATION CALIBRATION AND THERMAL POWER MEASUREMENT 2. SU-10.1 NSSS ACCEPTANCE TEST 3. SU-10.2 STEAM GENERATOR MOISTURE CARRYOVER MEASUREMENT 4. CALIBRATION OF STEAM AND FEEDWATER FLOW INSTRUMENTATION 5. SU-9.1 LOAD SWING TESTS 6. SU-9.3 LARGE LOAD REDUCTION TESTS 7. SU-9.4A PLANT TRIP FROM 100 PERCENT POWER 8. SU-1.0 PLANT MEASUREMENTS BASELINE AND OPERATIONAL DATA 9. REACTOR PLANT SYSTEMS SETPOINTS VERIFICATIONS	

FIGURE 14.1-4 STARTUP TEST SEQUENCE - UNIT 2

14.2 AUGMENTATION OF PLANT STAFF FOR INITIAL TESTS AND OPERATIONS (HISTORICAL)

Manpower requirements during the planning, coordination, and conduct of the initial test program necessitate that the normal operating staff be provided with technical assistance and, in some instances, direct augmentation from other organizations both within and outside of TVA. The distinction between assistance and augmentation is made so as to clearly note those instances where supplemental personnel are assigned to full-time duties with the plant staff in the implementation and conduct of the test program.

Members of the plant staff with key responsibilities for the initial testing program are identified in Paragraphs 14.1.1.1 and 14.1.1.2.

14.2.1 Organizational Functions, Responsibilities, and Authorities

The organizational functions of the various organizations and special groups involved in the preoperational and startup test programs are briefly discussed in Section 14.1 with regard to authorities and responsibilities for the preparation and review of detailed test instructions, the conduct of tests, and the review of test results. These organizational functions are classified as either "assistance" wherein the applicable organization acts as a technical consultant and provides test program review services to the plant staff or as "augmentation" wherein the applicable organization provides full-time personnel on a temporary basis to supplement the plant staff during the testing program.

14.2.1.1 Augmenting Organizations

Division of Nuclear Power (NUC PR) Preoperational Test Section

The NUC PR preoperational test section consists of system oriented engineers functioning under the direction of the section supervisor who acts as the preoperational test program coordinator. As discussed in Section 14.1, individual engineers within this group are designated as the "test director" for specific preoperational tests. As test directors, they are responsible for preparation of detailed test instructions, directing the conduct of the test, evaluation of test results, and final documentation for all tests so assigned. This group devotes its full-time activities to the preoperational test program.

Since certain portions of the preoperational test program cannot be completed until after fuel loading, the "test directors" are also considered as augmenting personnel during the startup test program. Additionally, certain members of the test group will have completed those preoperational tests for which they are responsible prior to the initial core loading and will be utilized during the startup test program as dictated by manpower requirements.

Reactor Engineering, Mechanical, and Electrical and Instrument and Controls Branches

Within the Division of Nuclear Power, the Reactor Engineering, Mechanical, and Electrical and Instrument and Controls Branch provides a variety of engineering services to generating plants. During nuclear plant startup, these services include providing test engineers technical guidance during testing and assistance in the analysis of test results as required.

These branches include the NSSS Engineering and Analysis Group, the Chemical Group, the Instrument and Controls Equipment Group, the Performance and Test Group, and a Reactor

Analyses Group. During startup testing and initial plant operation, personnel from these sections are assigned on a full or part-time basis to augment the normal plant operating staff. While so assigned, these personnel function under the supervision of the plant results supervisor as described in Subsection 14.1.1 and are responsible for the preparation of detailed startup test instructions, technical direction during conduct of the tests, and evaluation and final documentation of test results.

14.2.1.2 Assisting Organizations

Functional assistance in lieu of full-time assignment of personnel is provided by the following organizations:

Division of Construction (CONST)

The Division of Construction is responsible for completion of installation of plant systems and provides assistance to NUC PR during the preoperational and startup test programs. CONST also augments the plant staff by providing the necessary craft manpower for mechanical and electrical maintenance activities after systems have been accepted by NUC PR for testing and operation. CONST personnel assigned such duties will function under the technical direction of the plant maintenance supervisor.

Division of Engineering Design (EN DES)

The Division of Engineering Design is responsible for providing scoping documents describing the preoperational testing required for all systems within the TVA scope of supply. Further, as described in Section 14.1, OE will review all preoperational test instructions and, on a selective basis, startup test instructions for adequacy of testing and will review and approve all preoperational test results and, on a selective basis, startup test results for compliance with design requirements. They will provide all design information necessary for preparation of detailed test instructions; provide onsite technical guidance as necessary during preparation for and conduct of tests; and provide assistance in the evaluation of any design deficiencies discovered as a result of testing.

Radiological Health Staff

The Radiological Health Staff reviews selected test instructions and provides onsite technical assistance, if necessary, during conduct of testing on systems specifically designed for environmental and radiation protection. During initial plant operation, the division provides technical guidance in the areas of personnel radiation protection and environmental monitoring.

Westinghouse Electric Corporation (W)

Westinghouse Electric Corporation will review test instructions applicable to the Nuclear Steam Supply System (NSSS) prior to implementation. During initial testing and operation of the NSSS, Westinghouse will provide, through the Westinghouse site manager, competent personnel qualified for the various phases of the test program who will technically assist the plant staff. Westinghouse will participate in the review of NSSS test results.

14.2.2 Interrelationships and Interfaces

The working interrelationships and organizational interfaces of all groups which provide either direct augmentation or functional assistance to the plant staff are shown in Figures 14.2.2-1 and 14.2.2-2 for the preoperational and startup test programs, respectively.

14.2.3 Personnel Functions, Responsibilities, and Authorities

The key augmenting personnel for the preoperational test program are the members of the NUC PR Preoperational Test Section. The functions, responsibilities, and authorities of the "test directors" within this group are described in Subsection 14.1.1.

Key augmenting personnel positions during the startup test program are the staff engineer positions shown in Figure 14.2.2-2. The functions, responsibilities, and authorities of these positions are discussed in Paragraph 14.2.1.1.

14.2.4 Personnel Qualifications

Qualifications of appointees to key augmenting positions for the pre-operational and startup test programs will be kept in the plant master file. The files will also contain the key qualifications for the supervisors of the various sections.

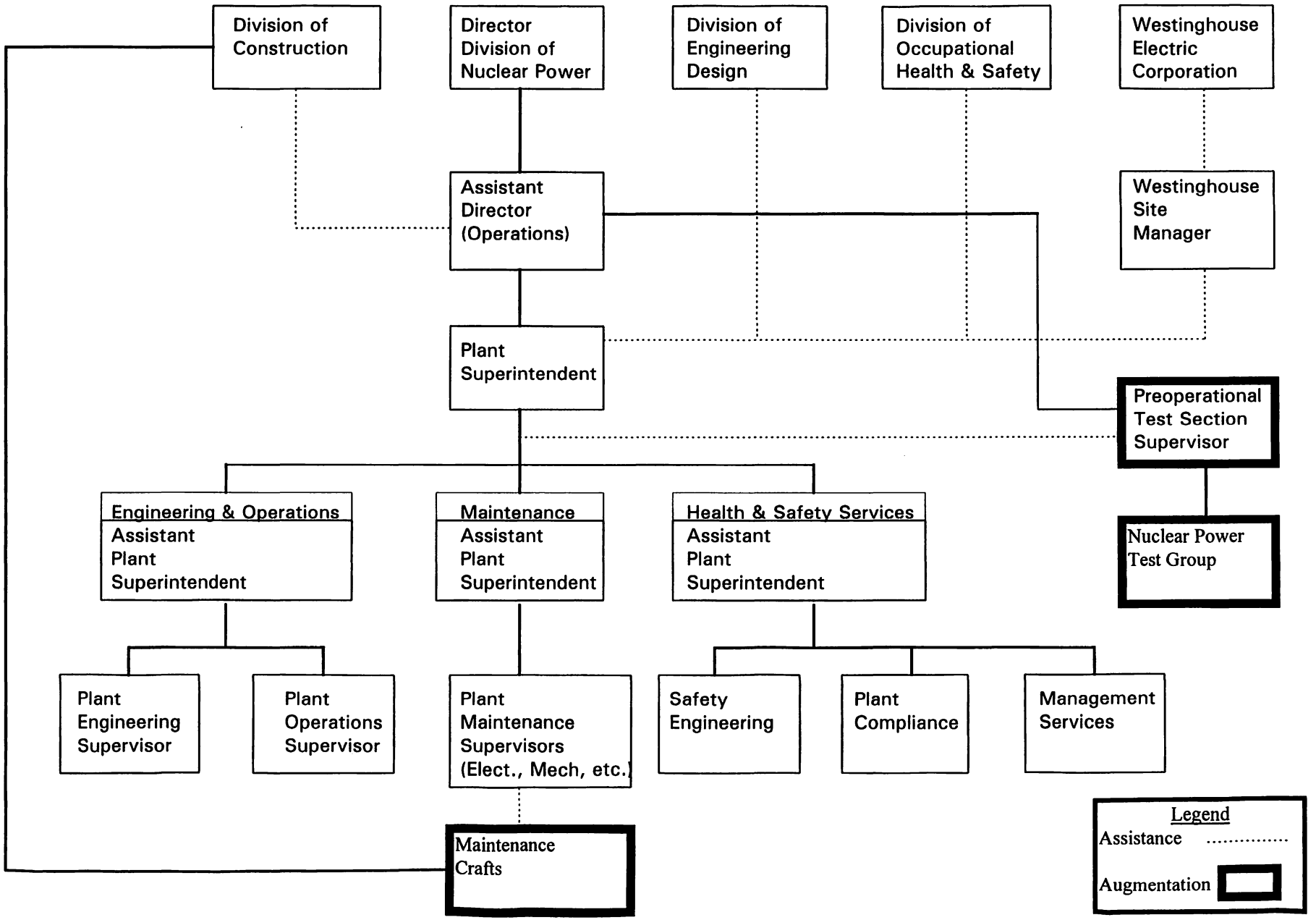

FF1422-1.DOC

Figure 14.2.2-1 Operating Staff Augmentation During Preoperational Test Program

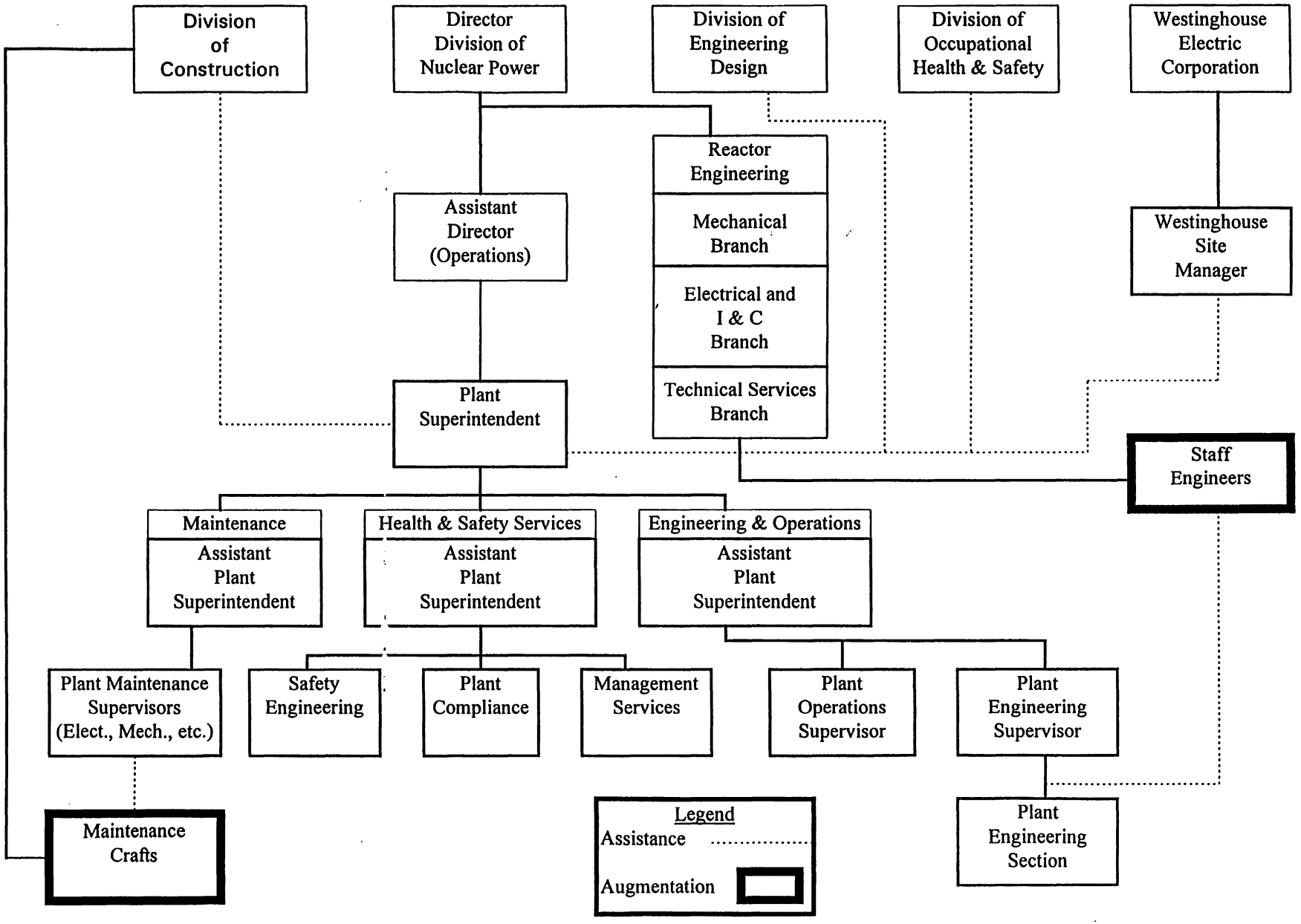

FF1422-2.DOC

Figure 14.2.2-2 Operating Staff Augmentation During Startup Test Program

TABLE OF CONTENTS

Section	Title	Page
15.0	ACCIDENT ANALYSES	15.1-1
15.1	CONDITION I - NORMAL OPERATION AND OPERATIONAL TRANSIENTS	15.1-1
15.1.1	OPTIMIZATION OF CONTROL SYSTEMS	15.1-2
15.1.2	INITIAL POWER CONDITIONS ASSUMED IN ACCIDENT ANALYSES	15.1-2
15.1.2.1	Power Rating	15.1-3
15.1.2.2	Initial Conditions	15.1-3
15.1.2.3	Power Distribution	15.1-4
15.1.3	TRIP POINTS AND TIME DELAYS TO TRIP ASSUMED IN ACCIDENT ANALYSES	15.1-4
15.1.4	INSTRUMENTATION DRIFT AND CALORIMETRIC ERROR-POWER RANGE NEUTRON FLUX	15.1-5
15.1.5	ROD CLUSTER CONTROL ASSEMBLY INSERTION CHARACTERISTIC	15.1-5
15.1.5.1	Fuel Assembly Bowing	15.1-5a
15.1.6	REACTIVITY COEFFICIENTS	15.1-6
15.1.7	FISSION PRODUCT INVENTORIES	15.1-7
15.1.7.1	Activities in the Core	15.1-7
15.1.7.2	Activities in the Fuel Pellet Cladding Gap	15.1-7
15.1.8	RESIDUAL DECAY HEAT	15.1-8
15.1.8.1	Fission Product Decay	15.1-9
15.1.8.2	Decay of U-238 Capture Products	15.1-9
15.1.8.3	Residual Fission	15.1-10
15.1.8.4	Distribution of Decay Heat Following Loss of Coolant Accident	15.1-10
15.1.9	COMPUTER CODES UTILIZED	15.1-10
15.1.9.1	FACTRAN	15.1-11
15.1.9.2	MARVEL	15.1-11
15.1.9.3	LOFTRAN	15.1-12
15.1.9.4	LEOPARD	15.1-12
15.1.9.5	TURTLE	15.1-12
15.1.9.6	TWINKLE	15.1-12
15.1.9.7	THINC	15.1-13
15.1.9.8	RELAPS/M0D2-B&W	15.1-13
15.1.9.9	S-RELAP5	

TABLE OF CONTENTS

Section	Title	Page
15.1.9.10	RODX3A	15.1-13
15.1.9.11	LYNXT	15.1-13
15.1.9.12	TACO3	15.1-14
15.1.9.13	NEMO	15.1-15
15.1.10	LOSS OF ONE (REDUNDANT) DC SYSTEM	15.1-15
15.1.10.1	Identification of Causes	15.1-15
15.1.10.2	Analysis of Effects and Consequences	15.1-16
15.1.11	REFERENCES	15.1-15
5.2	CONDITION II- FAULTS OF MODERATE FREQUENCY	15.2-1
15.2.1	UNCONTROLLED ROD CLUSTER CONTROL ASSEMBLY BANK WITHDRAWAL FROM A SUBCRITICAL CONDITION	15.2-2
15.2.1.1	Identification of Causes and Accident Description	15.2-2
15.2.1.2	Analysis of Effects and Consequences	15.2-3
15.2.1.3	Conclusions	15.2-4
15.2.2	UNCONTROLLED ROD CLUSTER CONTROL ASSEMBLY BANK WITHDRAWAL AT POWER	15.2-5
15.2.2.1	Identification of Causes and Accident Description	15.2-5
15.2.2.2	Analysis of Effects and Consequences	15.2-6
15.2.2.3	Conclusion	15.2-7
15.2.3	ROD CLUSTER CONTROL ASSEMBLY MISALIGNMENT	15.2-8
15.2.3.1	Identification of Causes and Accident Description	15.2-8
15.2.3.2	Analysis of Effects and Consequences	15.2-9
15.2.3.3	Conclusions	15.2-11
15.2.4	UNCONTROLLED BORON DILUTION	15.2-11
15.2.4.1	Identification of Causes and Accident Description	15.2-11
15.2.4.2	Analysis of Effects and Consequences	15.2-12
15.2.4.3	Conclusions	15.2-13
15.2.5	PARTIAL LOSS OF FORCED REACTOR COOLANT FLOW	15.2-15
15.2.5.1	Identification of Causes and Accident Description	15.2-15
15.2.5.2	Analysis of Effects and consequences	15.2-16
15.2.5.3	Conclusions	15.2-16
15.2.6	STARTUP OF AN INACTIVE REACTOR COOLANT LOOP	15.2-17
15.2.6.1	Identification of Causes and Accident Description	15.2-17
15.2.6.2	Analysis of Effects and Consequences	15.2-17
15.2.6.3	Conclusions	15.2-18

TABLE OF CONTENTS

Section	Title	Page
15.2.7	LOSS OF EXTERNAL ELECTRICAL LOAD AND/OR TURBINE TRIP	15.2-18
15.2.7.1	Identification of Causes and Accident Description	15.2-18
15.2.7.2	Analysis of Effects and Consequences	15.2-21
15.2.7.3	Framatome ANP Safety Evaluation With Replacement Steam Generators	15.2-24
15.2.7.4	Conclusions	15.2-25
15.2.8	LOSS OF NORMAL FEEDWATER	15.2-25
15.2.8.1	Identification of Causes and Accident Description	15.2-25
15.2.8.2	Analysis of Effects and Consequences	15.2-26
15.2.8.3	Conclusions	15.2-27
15.2.9	LOSS OF OFF-SITE POWER TO THE STATION AUXILIARIES	15.2-28
15.2.9.1	Identification of Causes and Accident Description	15.2-28
15.2.9.2	Analysis of Effects and Consequences	15.2-28
15.2.9.3	Conclusions	15.2-30
15.2.10	EXCESSIVE HEAT REMOVAL DUE TO FEEDWATER SYSTEM MALFUNCTIONS	15.2-30
15.2.10.1	Identification of Causes and Accident Description	15.2-30
15.2.10.2	Analysis of Effects and Consequences	15.2-30
15.2.10.3	Conclusions	15.2-33
15.2.11	EXCESSIVE LOAD INCREASE	15.2-33
15.2.11.1	Identification of Causes and Accident Description	15.2-33
15.2.11.2	Analysis of Effects and Consequences	15.2-33
15.2.11.3	Conclusions	15.2-34
15.2.12	ACCIDENTAL DEPRESSURIZATION OF THE REACTOR COOLANT SYSTEM	15.2-35
15.2.12.1	Identification of Causes and Accident Description	15.2-35
15.2.12.2	Analysis of Effects and Consequences	15.2-35
15.2.12.3	Conclusions	15.2-36
15.2.13	ACCIDENTAL DEPRESSURIZATION OF THE MAIN STEAM SYSTEM	15.2-36
15.2.13.1	Identification of Causes and Accident Description	15.2-36
15.2.13.2	Analysis of Effects and Consequences	15.2-37
15.2.13.3	Conclusions	15.2-38
15.2.14	SPURIOUS OPERATION OF THE SAFETY INJECTION SYSTEM AT POWER	15.2-38
15.2.14.1	Identification of Causes and Accident Description	15.2-38
15.2.14.2	Analysis of Effects and Consequences	15.2-39
15.2.14.3	Conclusions	15.2-40
15.2.15	REFERENCES	15.2-41

TABLE OF CONTENTS

Section	Title	Page
15.3	CONDITION III- INFREQUENT FAULTS	15.3-1
15.3.1	LOSS OF REACTOR COOLANT FROM SMALL RUPTURED PIPES OR FROM CRACKS IN LARGE PIPES, WHICH ACTUATES EMERGENCY CORE COOLING SYSTEM	15.3-1
15.3.1.1	Identification of Causes and Accident Description	15.3-1
15.3.1.2	Small Break LOCA Evaluation Model	15.3-2
15.3.1.3	Small Break LOCA Spectrum Analysis	15.3-3
15.3.1.4	Conclusion	15.3-4
15.3.2	MINOR SECONDARY SYSTEM PIPE BREAKS	15.3-4
15.3.2.1	Identification of Causes and Accident Description	15.3-4
15.3.2.2	Analysis of Effects and Consequences	15.3-4
15.3.2.3	Conclusions	15.3-4
15.3.3	INADVERTENT LOADING OF A FUEL ASSEMBLY INTO AN IMPROPER POSITION	15.3-5
15.3.3.1	Identification of Causes and Accident Description	15.3-5
15.3.3.2	Analysis of Effects and Consequences	15.3-5
15.3.3.3	Conclusions	15.3-6
15.3.4	COMPLETE LOSS OF FORCED REACTOR COOLANT FLOW	15.3-7
15.3.4.1	Identification of Causes and Accident Description	15.3-7
15.3.4.2	Analysis of Effects and Consequences	15.3-7
15.3.4.3	Conclusions	15.3-8
15.3.5	WASTE GAS DECAY TANK RUPTURE	15.3-8
15.3.5.1	Identification of Causes and Accident Description	15.3-8
15.3.5.2	Analysis of Effects and Consequence	15.3-8
15.3.6	SINGLE ROD CLUSTER CONTROL ASSEMBLY WITHDRAWAL AT FULL POWER	15.3-8
15.3.6.1	Identification of Causes and Accident Description	15.3-9
15.3.6.2	Analysis of Effects and Consequences	15.3-9
15.3.6.3	Conclusions	15.3-10
15.3.7	STEAM LINE BREAK COINCIDENT WITH ROD WITHDRAWAL AT POWER (SLB C/W RWAP)	15.3-10
15.3.7.1	Identification of Causes and Accident Description	15.3-10
15.3.7.2	Method of Analysis	15.3-11
15.3.7.3	Results	15.3-11
15.3.8	REFERENCES	15.3-11

TABLE OF CONTENTS

Section	Title	Page
15.4	CONDITION IV - LIMITING FAULTS	15.4-1
15.4.1	MAJOR REACTOR COOLANT SYSTEM PIPE RUPTURES (LOSS OF COOLANT ACCIDENT)	15.4-1
15.4.1.1	Performance Criteria for Emergency Core Cooling System	15.4-3
15.4.1.2	Method of Analysis	15.4-3
15.4.1.3	Containment Analysis	15.4-4
15.4.1.4	Results of Large Break Spectrum	15.4-5
15.4.1.5	Effect of Containment Purging	15.4-6
15.4.1.6	Additional Items Impacting Peak Cladding Temperature	15.4-6
15.4.1.7	Conclusions - Thermal Analysis	15.4-7
15.4.2	MAJOR SECONDARY SYSTEM PIPE RUPTURE	15.4-7
15.4.2.1	Rupture of a Main Steam Line	15.4-7
15.4.2.2	Major Rupture of a Main Feedwater Pipe	15.4-15
15.4.3	STEAM GENERATOR TUBE RUPTURE	15.4-19
15.4.3.1	Identification of Causes and Accident Description	15.4-19
15.4.3.2	Analysis of Effects and Consequences	15.4-21
15.4.3.3	Conclusions	15.4-23
15.4.4	SINGLE REACTOR COOLANT PUMP LOCKED ROTOR	15.4-23
15.4.4.1	Identification of Causes and Accident Description	15.4-23
15.4.4.2	Analysis of Effects and Consequences	15.4-24
15.4.4.3	Conclusions	15.4-25
15.4.5	FUEL HANDLING ACCIDENT	15.4-25
15.4.5.1	Identification of Causes and Accident Description	15.4-25
15.4.5.2	Analysis of Effects and Consequences	15.4-25
15.4.6	RUPTURE OF A CONTROL ROD DRIVE MECHANISM HOUSING (ROD CLUSTER CONTROL ASSEMBLY EJECTION)	15.4-25
15.4.6.1	Identification of Causes and Accident Description	15.4-25
15.4.6.2	Analysis of Effects and Consequences	15.4-28
15.4.6.3	Conclusions	15.4-32
15.4.7	REFERENCES	15.4-37
15.5	ENVIRONMENTAL CONSEQUENCES OF ACCIDENTS	15.5-1
15.5.1	ENVIRONMENTAL CONSEQUENCES OF A POSTULATED LOSS OF A.C. POWER TO THE PLANT AUXILIARIES	15.5-1
15.5.2	ENVIRONMENTAL CONSEQUENCES OF A POSTULATED WASTE GAS DECAY TANK RUPTURE	15.5-2
15.5.3	ENVIRONMENTAL CONSEQUENCES OF A POSTULATED LOSS OF COOLANT ACCIDENT	15.5-3

TABLE OF CONTENTS

Section	Title	Page
15.5.4	ENVIRONMENTAL CONSEQUENCES OF A POSTULATED STEAM LINE BREAK	15.5-19
15.5.5	ENVIRONMENTAL CONSEQUENCES OF A POSTULATED STEAM GENERATOR TUBE RUPTURE	15.5-22
15.5.6	ENVIRONMENTAL CONSEQUENCES OF A POSTULATED FUEL HANDLING ACCIDENT	15.5-24
15.5.7	ENVIRONMENTAL CONSEQUENCES OF A POSTULATED ROD EJECTION ACCIDENT	15.5-26
15.5.8	REFERENCES	15.5-27
APPENDIX 15A	DOSE MODELS USED TO EVALUATE THE ENVIRONMENTAL CONSEQUENCES OF ACCIDENTS	15A-1
APPENDIX 15B	SENSITIVITY ANALYSIS OF LOCA DOSE CALCULATIONS (HISTORICAL INFORMATION)	15B-1
APPENDIX 15C	FUEL ROD MODEL DISCUSSION (HISTORICAL INFORMATION)	15C-1
APPENDIX 15D	PRIMARY COOLANT ACTIVITY MODEL USED TO EVALUATE THE RADIOLOGICAL CONSEQUENCES OF ACCIDENTS	15D-1

LIST OF TABLES

Number	Title
15.1.2-1	Nuclear Steam Supply System Power Ratings
15.1.2-2	Summary of Initial Conditions and Computer Codes
15.1.3-1	Trip Points and Time Delays to Trip Assumed in Accident Analyses
15.1.7-1	Core and Gap Activities Based on Full Power Operation for 1000 Days - Full Power: 3582 MWt
15.1.7-2	Core Temperature Distribution
15.2-1	Time Sequence of Events for Condition II Events
15.2.7-1	Initial Conditions for a Complete Loss of Load from 52% Power
15.2.7-2	Time Sequence of events for a Turbine Trip at 52% Power with Pressurizer Pressure Control
15.2.7-3	Time Sequence of Events for a Turbine Trip at 52% Power without Pressurizer Pressure Control
15.3.1-1	Small Break LOCA Time Sequence of Events, sec
15.3.1-2	Small Break LOCA Results
15.3.4-1	Time Sequence of Events for Complete Loss of Flow Events
15.3.7-1	Time Sequence of Events for the Steam Line Break Coincident With Rod Withdrawal at Power Analysis
15.4.1-1	Plant Operating Range Supports by the Realistic Large Break LOCA Analysis
15.4.1-2	Realistic Large Break LOCA Time Sequence of Events
15.4.1-3a	Realistic Large Break LOCA Results - Base Analysis
15.4.1-3b	Realistic Large Break LOCA Results - SRR Effects
15.4.1-4	Realistic Large Break LOCA Ice Condenser Containment Initial and Boundary Conditions
15.4.1-5	Realistic Large Break LOCA Passive Structural Heat Sinks in Containment

LIST OF TABLES

Number	Title
15.4.1-6	Deleted
15.4.1-7	Deleted
15.4.1-9	Time Sequence of Events for Condition IV Events
15.4.1-12	Time Sequence of Events for Steam Line Break
15.4.2-1	Limiting Core Parameters Used in Steam Line Break DNB Analysis
15.4.4-1	Summary of Results for Locked Rotor Transients
15.4.6-1	Parameters Used in the Analysis of the Rod Cluster Control Assembly Ejection Accident
15.5.1-1	Parameters Used in Loss of A.C. Power Analyses
15.5.2-1	Parameters Used in Waste Gas Decay Tank Rupture Analyses
15.5.2-2	Waste Gas Decay Tank Inventory (one unit)
15.5.3-1	Parameters Used in LOCA Analyses
15.5.3-2	Ice Condenser Iodine Removal Efficiency
15.5.3-3	Emergency Gas Treatment System Flow Rates: Large Break LOCA
15.5.3-4	Offsite Doses from Loss of Coolant Accident
15.5.3-5	LOCA Source Term Activities for Control Room and Offsite Dose Analyses
15.5.3-6	Atmospheric Dilution Factors at Control Building
15.5.3-7	Control Room Personnel Doses for DBA Post Accident Period
15.5.3-8	Containment Atmosphere and Sump LOCA Source Term Activities
15.5.4-1	Parameters Used in Steam Line Break Analyses
15.5.5-1	Parameters Used in Steam Generator Tube Rupture Analyses
15.5.6-1	Parameters Used in Fuel Handling Accident Analyses

LIST OF FIGURES

Number	Title
15.1.3-1	Illustration of Overtemperature and Overpower ΔT Protection
15.1.3-2a	Illustration of Variable Design Peak - Mark-BW Fuel
15.1.3-2b	Illustration of Variable Design Peak - Advanced W17 HTP Fuel (Transition Cores)
15.1.3-2c	Illustration of Variable Design Peak - Advanced W17 HTP Fuel (Full Core)
15.1.5-1	RCCA Position Versus Time on Reactor Trip
15.1.5-2	Normalized RCCA Reactivity Worth versus Rod Insertion
15.1.5-3	RCCA Bank Reactivity Worth versus Time After Trip
15.1.6-1	Doppler Power Coefficient Used in Accident Analysis
15.1.8-1	Residual Decay Heat
15.1.9-1	Fuel Rod Cross Section
15.2.1-1	RCCA Withdrawal from Subcritical - Nuclear Power
15.2.1-2a	RCCA Withdrawal from Subcritical - Thermal Power - Mark-BW Fuel
15.2.1-2b	RCCA Withdrawal from Subcritical - Thermal Power - Advanced W17 HTP Fuel
15.2.1-3a	RCCA Withdrawal from Subcritical - Fuel/Clad Temperature - Mark-BW Fuel
15.2.1-3b	RCCA Withdrawal from Subcritical - Fuel/Clad Temperature - Advanced W17 HTP Fuel (Transition Cores)
15.2.1-3c	RCCA Withdrawal from Subcritical - Fuel/Clad Temperature - Advanced W17 HTP Fuel (Full Core)
15.2.2-1a	Uncontrolled Fast Rod Withdrawal from 100% Power with Maximum Reactivity Feedback Neutron Power, Thermal Power vs Time – Advanced W17 HTP Fuel (Transition Cores)
15.2.2-1b	Uncontrolled Fast Rod Withdrawal from 100% Power with Maximum Reactivity Feedback Neutron Power, Thermal Power vs Time – Advanced W17 HTP Fuel (Full Core)
15.2.2-2a	Uncontrolled Fast Rod Withdrawal From 100% Power with Maximum Reactivity Feedback Pressurizer Pressure, Pressurizer Water Level vs Time – Advanced W17 HTP Fuel (Transition Cores)
15.2.2-2b	Uncontrolled Fast Rod Withdrawal From 100% Power with Maximum Reactivity Feedback Pressurizer Pressure, Pressurizer Water Level vs Time – Advanced W17 HTP Fuel (Full Core)

LIST OF FIGURES

Number	Title
15.2.2-3a	Uncontrolled Fast Rod Withdrawal From 100% Power with Maximum Reactivity Feedback Core Average Temperature, DNBR vs Time – Advanced W17 HTP Fuel (Transition Cores)
15.2.2-3b	Uncontrolled Fast Rod Withdrawal From 100% Power with Maximum Reactivity Feedback Core Average Temperature, DNBR vs Time – Advanced W17 HTP Fuel (Full Core)
15.2.2-4a	Uncontrolled Slow Rod Withdrawal From 100% Power with Minimum Reactivity Feedback Neutron Power, Thermal Power vs Time – Advanced W17 HTP Fuel (Transition Cores)
15.2.2-4b	Uncontrolled Slow Rod Withdrawal From 100% Power with Minimum Reactivity Feedback Neutron Power, Thermal Power vs Time – Advanced W17 HTP Fuel (Full Core)
15.2.2-5a	Uncontrolled Slow Rod Withdrawal From 100% Power with Minimum Reactivity Feedback Pressurizer Pressure, Pressurizer Water Level vs Time – Advanced W17 HTP Fuel (Transition Cores)
15.2.2-5b	Uncontrolled Slow Rod Withdrawal From 100% Power with Minimum Reactivity Feedback Pressurizer Pressure, Pressurizer Water Level vs Time – Advanced W17 HTP Fuel (Full Core)
15.2.2-6a	Uncontrolled Slow Rod Withdrawal From 100% Power with Minimum Reactivity Feedback Core Average Temperature, DNBR vs. Time – Advanced W17 HTP Fuel (Transition Cores)
15.2.2-6b	Uncontrolled Slow Rod Withdrawal From 100% Power with Minimum Reactivity Feedback Core Average Temperature, DNBR vs. Time – Advanced W17 HTP Fuel (Full Core)
15.2.2-7a	Effect of Reactivity Insertion Rate on Minimum DNBR for a Rod Withdrawal Accident at 100% Power, Advanced W17 HTP Fuel (Transition Cores)
15.2.2-7b	Effect of Reactivity Insertion Rate on Minimum DNBR for a Rod Withdrawal Accident at 100% Power, Advanced W17 HTP Fuel (Full Core)
15.2.3-1	Nuclear Power and Core Heat Flux Transient Response to Dropped Rod Cluster Control Assembly
15.2.3-2	Coolant Temperature and Primary Pressure Transient Response to Dropped Rod Cluster Control Assembly
15.2.4-1	RCS Boron Concentration versus Time- BOL Equilibrium XE and Clean Initial Conditions
15.2.4-2	K_{eff} vs Time- Equilibrium XE and Clean Conditions Following Trip from Full Power

LIST OF FIGURES

Number	Title
15.2.4-3	Nuclear Power (Detector Indication) After Trip versus Time
15.2.5-1	Partial Loss of Forced Reactor Coolant Flow, Reactor Vessel and Loop Flow vs. Time
15.2.5-2aa	Partial Loss of Forced Reactor Coolant Flow, Heat Flux vs. Time (Hot Channel) - Mark-BW Fuel
15.2.5-2ab	Partial Loss of Forced Reactor Coolant Flow, Heat Flux vs. Time (Hot Channel) - Advanced W17 HTP Fuel
15.2.5-2ba	Partial Loss of Forced Reactor Coolant Flow, Heat Flux vs. Time (Average Channel) - Mark-BW Fuel
15.2.5-2bb	Partial Loss of Forced Reactor Coolant Flow, Heat Flux vs. Time (Average Channel) - Advanced W17 HTP Fuel
15.2.5-2c	Partial Loss of Forced Reactor Coolant Flow, Nuclear Power vs. Time
15.2.5-3a	Partial Loss of Forced Reactor Coolant Flow, DNBR vs. Time - Mark-BW Fuel
15.2.5-3b	Partial Loss of Forced Reactor Coolant Flow, DNBR vs. Time - Advanced W17 HTP Fuel (Transition Cores)
15.2.5-3c	Partial Loss of Forced Reactor Coolant Flow, DNBR vs. Time - Advanced W17 HTP Fuel (Full Core)
15.2.6-1	Startup of an Inactive Reactor Coolant Pump, Active Loop Flow vs. Time;, Core Flow vs. Time
15.2.6-2	Startup of an Inactive Reactor Coolant Pump, Core Average Temperature vs. Time; Nuclear Power vs. Time
15.2.6-3	Startup of an Inactive Reactor Coolant Pump, Heat Flux vs. Time, Pressurizer Pressure vs. Time
15.2.6-4	Startup of an Inactive Reactor Coolant Pump, DNBR vs. Time
15.2.7-1a	Loss of Electric Load (Peak Primary Pressure Case) – Core Power
15.2.7-1b	Loss of Electric Load (Peak Secondary Pressure Case) – Core Power

LIST OF FIGURES

Number	Title
15.2.7-2a	Loss of Electric Load (Peak Primary Pressure Case) - Reactor Vessel Lower Plenum Pressure
15.2.7-2b	Loss of Electric Load (Peak Secondary Pressure Case) - Reactor Vessel Lower Plenum Pressure
15.2.7-3a	Loss of Electric Load – (Peak Primary Pressure Case) – Steam Generator Downcomer Pressure
15.2.7-3b	Loss of Electric Load – (Peak Secondary Pressure Case) – Steam Generator Downcomer Pressure
15.2.7-4a	Loss of Electric Load – (Peak Primary Pressure Case) – Average RCS Temperature
15.2.7-4b	Loss of Electric Load – (Peak Secondary Pressure Case) – Average RCS Temperature
15.2.7-5a	Loss of Electric Load – (Peak Primary Pressure Case) – Pressurizer Water Volume
15.2.7-5b	Loss of Electric Load – (Peak Secondary Pressure Case) – Pressurizer Water Volume
15.2.7-6a	Loss of Electric Load DNBR - Mark-BW Fuel
15.2.7-6b	Loss of Electric Load DNBR - Advanced W17 HTP Fuel - (Peak Primary Pressure Case)
15.2.7-7	Loss of Electric Load (Peak Secondary Pressure Case) DNBR – Advanced W17 HTP Fuel (Full Core and Transition Core)
15.2.7-9	Loss of Load From 52% Power With Pressure Control, Minimum Feedback
15.2.7-10	Loss of Load From 52% Power With Pressure Control, Minimum Feedback
15.2.7-11	Loss of Load From 52% Power With Pressure Control, Maximum Feedback
15.2.7-12	Loss of Load From 52% Power With Pressure Control, Maximum Feedback
15.2.7-13	Loss of Load From 52% Power Without Pressure Control, Minimum Feedback
15.2.7-14	Loss of Load From 52% Power Without Pressure Control, Minimum Feedback
15.2.7-15	Loss of Load From 52% Power Without Pressure Control, Maximum Feedback
15.2.7-16	Loss of Load From 52% Power Without Pressure Control, Maximum Feedback
15.2.8-1	Full Power Loss of Normal Feedwater - Nuclear Power and RCS Flow vs. Time
15.2.8-2	Full Power Loss of Normal Feedwater - Pressurizer Pressure and Pressurizer Water Volume vs. Time

LIST OF FIGURES

Number	Title
15.2.8-3	Full Power Loss of Normal Feedwater - Loops 1 and 3 Cold Leg, Hot Leg and Saturation Temperatures vs Time
15.2.8-4	Full Power Loss of Normal Feedwater - Steam Generator Pressure and Steam Generator Mass vs. Time
15.2.9-1	Loss of Offsite Power to the Station Auxiliaries Event - Nuclear Power and RCS Flow as a Function of Time
15.2.9-2	Loss of Offsite Power to the Station Auxiliaries Event - Pressurizer Pressure and Pressurizer Water Volume as a Function of Time
15.2.9-3	Loss of Offsite Power to the Station Auxiliaries Event - Loop 1 and Loop 3 Cold Leg, Hot Leg, and Saturation Temperatures as a Function of Time
15.2.9-4	Loss of Offsite Power to the Station Auxiliaries Event - Steam Generator Pressure and Steam Generator Mass as a Function of Time
15.2.10-1	Single Loop Feedwater Malfunction with Manual Rod Control at Full Power – Power vs. Time – Digital Feedwater Control
15.2.10-2a	Single Loop Feedwater Malfunction with Manual Rod Control at Full Power – DNBR vs. Time – Digital Feedwater Control - Mark-BW Fuel
15.2.10-2b	Single Loop Feedwater Malfunction with Manual Rod Control at Full Power – Digital FWC - HTP Fuel (Transition Cores)
15.2.10-2c	Single Loop Feedwater Malfunction with Manual Rod Control at Full Power – Digital FWC - HTP Fuel (Full Core)
15.2.10-3	Single Loop Feedwater Malfunction with Manual Rod Control at Full Power – Core Average Temperature vs. Time – Digital Feedwater Control
15.2.10-4	Single Loop Feedwater Malfunction with Manual Rod Control at Full Power – Loop Differential Temperature vs. Time – Digital Feedwater Control
15.2.10-5	Single Loop Feedwater Malfunction with Manual Rod Control at Full Power – Pressurizer Pressure vs. Time – Digital Feedwater Control
15.2.11-1a	Excessive Load Increase With Manual Reactor Control, at Beginning of Life. DNBR, Nuclear Power and Pressurizer Pressure as a Function of Time - Mark-BW Fuel

LIST OF FIGURES

Number	Title
15.2.11-1b	Excessive Load Increase With Manual Reactor Control, at Beginning of Life. DNBR Nuclear Power and Pressurizer Pressure as a Function of Time - Advanced W17 HTP Fuel (Transition Cores)
15.2.11-1c	Excessive Load Increase With Manual Reactor Control, at Beginning of Life. DNBR Nuclear Power and Pressurizer Pressure as a Function of Time - Advanced W17 HTP Fuel (Full Core)
15.2.11-2	Excessive Load Increase With Manual Reactor Control, at Beginning-of-Life. ΔT and T_{avg} as a Function of Time
15.2.11-3a	Excessive Load Increase With Manual Reactor Control, at End-of-Life. DNBR, Nuclear Power and Pressurizer Pressure as a Function of Time - Mark-BW Fuel
15.2.11-3b	Excessive Load Increase With Manual Reactor Control, at End-of-Life. DNBR, Nuclear Power and Pressurizer Pressure as a Function of Time - Advanced W17 HTP Fuel (Transition Cores)
15.2.11-3c	Excessive Load Increase With Manual Reactor Control, at End-of-Life. DNBR, Nuclear Power and Pressurizer Pressure as a Function of Time - Advanced W17 HTP Fuel (Full Core)
15.2.11-4	Excessive Load Increase With Manual Reactor Control, at End-of-Life. ΔT and T_{avg} as a Function of Time
15.2.11-5a	Excessive Load Increase With Automatic Reactor Control, at Beginning-of-Life. DNBR, Nuclear Power, and Pressurizer Pressure as a Function of Time - Mark-BW Fuel
15.2.11-5b	Excessive Load Increase With Automatic Reactor Control, at Beginning-of-Life. DNBR, Nuclear Power, and Pressurizer Pressure as a Function of Time - Advanced W17 HTP Fuel (Transition Cores)
15.2.11-5c	Excessive Load Increase With Automatic Reactor Control, at Beginning-of-Life. DNBR, Nuclear Power, and Pressurizer Pressure as a Function of Time - Advanced W17 HTP Fuel (Full Core)
15.2.11-6	Excessive Load Increase With Automatic Reactor Control, at Beginning of Life, ΔT and T_{avg} as a Function of Time
15.2.11-7a	Excessive Load Increase With Automatic Reactor Control, at End-of-Life. DNBR, Nuclear Power and Pressurizer Pressure as a Function of Time - Mark-BW Fuel
15.2.11-7b	Excessive Load Increase With Automatic Reactor Control, at End-of-Life. DNBR, Nuclear Power and Pressurizer Pressure as a Function of Time - Advanced W17 HTP Fuel (Transition Cores)
15.2.11-7c	Excessive Load Increase With Automatic Reactor Control, at End-of-Life. DNBR, Nuclear Power and Pressurizer Pressure as a Function of Time - Advanced W17 HTP Fuel (Full Core)

LIST OF FIGURES

Number	Title
15.2.11-8	Excessive Load Increase With Automatic Reactor Control, at End-of-Life. ΔT and $T_{(avg)}$ as a Function of Time
15.2.12-1	Nuclear Flux Transient for Accidental Depressurization
15.2.12-2	Pressurizer Pressure and Coolant Temp Transients for Accidental Depressurization
15.2.12-3a	DNBR Transient for Accidental Depressurization - Mark-BW Fuel
15.2.12-3b	DNBR Transient for Accidental Depressurization - Advanced W17 HTP Fuel
15.2.13-1	Variation of K_{eff} with Core Temperature
15.2.13-2	Safety Injection Curve
15.2.13-3	Transient Response for a Steam Line Break Equivalent to 228 lbs/sec at 1015 PSIA with Outside Power Available
15.2.14-1	Spurious Actuation of Safety Injection System at Power
15.2.14-2	Spurious Actuation of Safety Injection System at Power
15.3.1-1	Small Break LOCA Study Axial Peaking Profile
15.3.1-2	Small Break LOCA Study Pumped ECCS Injection vs. RCS Pressure
15.3.1-3	9.76-Inch Pump Discharge Break Primary System Pressure
15.3.1-4	9.76-Inch Pump Discharge Break Leak Flow Rate
15.3.1-5	9.76-Inch Pump Discharge Break Loop Seal Upside Collapsed Liquid Levels
15.3.1-6	9.76-Inch Pump Discharge Break Inner and Outer Core Collapsed Liquid Level
15.3.1-7	9.76-Inch Pump Discharge Break Hot Pin Clad Temperature
15.3.3-1	Interchange Between Region 1 and Region 3 Assembly
15.3.3-2	Interchange Between Region 1 and Region 2 Assembly, Burnable Poison Rods Being Retained by the Region 2 Assembly
15.3.3-3	Interchange Between Region 1 and Region 2 Assembly, Burnable Poison Rods Being Transferred to the Region 1 Assembly
15.3.3-4	Enrichment Error: A Region 2 Assembly Loaded Into the Core Central Position
15.3.3-5	Loading a Region 2 Assembly Into a Region 1 Position Near Core Periphery

LIST OF FIGURES

Number	Title
15.3.4-1a	Complete Loss of Forced Reactor Coolant Flow, Neutron Power and Thermal Power vs. Time - Mark-BW Fuel
15.3.4-1b	Complete Loss of Forced Reactor Coolant Flow, Neutron Power and Thermal Power vs. Time - Advanced W17 HTP Fuel
15.3.4-2a	Complete Loss of Forced Reactor Coolant Flow, Core Flow Fraction and DNBR vs. Time - Mark-BW Fuel
15.3.4-2b	Complete Loss of Forced Reactor Coolant Flow, Core Flow Fraction and DNBR vs. Time - Advanced W17 HTP Fuel (Transition Cores)
15.3.4-2c	Complete Loss of Forced Reactor Coolant Flow, Core Flow Fraction and DNBR vs. Time - Advanced W17 HTP Fuel (Full Core)
15.3.7-1a	Steamline Break Coincident with RWAP - Neutron Power, Thermal Power vs Time - Mark-BW Fuel
15.3.7-1b	Steamline Break Coincident with RWAP - Neutron Power, Thermal Power vs Time - HTP Fuel
15.3.7-2a	Steamline Break Coincident with RWAP - Pressurizer Pressure, Core Average Temperature vs. Time - Mark-BW Fuel
15.3.7-2b	Steamline Break Coincident with RWAP - Pressurizer Pressure, Core Average Temperature vs. Time - HTP Fuel

LIST OF FIGURES

Number	Title
15.3.7-3a	Sequoyah Steam Line Break Coincident with Rod Withdrawal – Steam Line Pressure, DNBR vs. Time - Mark-BW Fuel
15.3.7-3b	Sequoyah Steam Line Break Coincident with Rod Withdrawal - Steam Generator Steam Pressure, DNBR vs. Time - HTP Fuel (Transition Cores)
15.3.7-3c	Sequoyah Steam Line Break Coincident with Rod Withdrawal - Steam Generator Steam Pressure, DNBR vs. Time - HTP Fuel (Full Core)
15.4.1-1	Realistic Large Break LOCA - Containment Compartment Pressure for the Limiting Case
15.4.1-2	Realistic Large Break LOCA - Reactor Vessel Upper Plenum Pressure for the Limiting Case
15.4.1-3	Realistic Large Break LOCA - Core Inlet Mass Flux for the Limiting Case
15.4.1-4	Realistic Large Break LOCA - Core Outlet Mass Flux for the Limiting Case
15.4.1-5	Deleted
15.4.1-6	Realistic Large Break LOCA - Break Mass Flowrate for the Limiting Case
15.4.1-7	Realistic Large Break LOCA - Break Energy Flowrate for the Limiting Case
15.4.1-8	Deleted
15.4.1-9	Realistic Large Break LOCA - Downcomer Liquid Level for the Limiting Case
15.4.1-10	Realistic Large Break LOCA - Core Liquid Level for the Limiting Case
15.4.1-11	Realistic Large Break LOCA - Accumulator and Pumped SI Flowrate for the Limiting Case
15.4.1-12	Deleted
15.4.1-13	Deleted
15.4.1-14	Realistic Large Break LOCA - Peak Clad Temperature for the Limiting Case
15.4.1-15	Realistic Large Break LOCA - Energy Addition in Lower Compartment for the Limiting Case
15.4.1-16	Realistic Large Break LOCA - Energy Rates in Lower Compartment for the Limiting Case
15.4.1-17	Realistic Large Break LOCA - Energy Removal Rates in Lower Compartment for the Limiting Case

LIST OF FIGURES

Number	Title
15.4.1-18	Realistic Large Break LOCA - Energy Removal Rates in Upper Compartment for the Limiting Case
15.4.1-19	Realistic Large Break LOCA - Heat Removal Rate (log) for the Limiting Case
15.4.1-20	Realistic Large Break LOCA - Fraction of Ice Remaining for the Limiting Case
15.4.1-21	Realistic Large Break LOCA - Mass Addition to lower Compartment for the Limiting Case
15.4.1-22	Realistic Large Break LOCA - Compartment Temperature for the Limiting Case
15.4.1-33	Deleted
15.4.1-34	Deleted
15.4.1-35	Deleted
15.4.1-36	Deleted
15.4.2-1	Variation of Reactivity with Power at Constant Core Average Temperature - Power Doppler Reactivity
15.4.2-2	Safety Injection Curve - Minimum Safeguards
15.4.2-3	Sequoyah Steam Line Break Downstream of Flow Measuring Nozzle With Off-Site Power (Case A) - Neutron Power
15.4.2-4	Sequoyah Steam Line Break Downstream of Flow Measuring Nozzle With Off-Site Power (Case A) - Thermal Power
15.4.2-5	Sequoyah Steam Line Break Downstream of Flow Measuring Nozzle With Off-Site Power (Case A) - RCS Flow
15.4.2-6	Sequoyah Steam Line Break Downstream of Flow Measuring Nozzle With Off-Site Power (Case A) - Steam Flow
15.4.2-7	Sequoyah Steam Line Break Downstream of Flow Measuring Nozzle With Off-Site Power (Case A) - Reactivity
15.4.2-8	Sequoyah Steam Line Break Downstream of Flow Measuring Nozzle With Off-Site Power (Case A) - Core Boron
15.4.2-9	Sequoyah Steam Line Break Downstream of Flow Measuring Nozzle With Off-Site Power (Case A) - System Pressure
15.4.2-10	Sequoyah Steam Line Break Downstream of Flow Measuring Nozzle With Off-Site Power (Case A) - Core Average Temperature

LIST OF FIGURES

Number	Title
15.4.2-11	Sequoyah Steam Line Break Upstream of Flow Measuring Nozzle With Off-Site Power (Case B) - Neutron Power
15.4.2-12	Sequoyah Steam Line Break Upstream of Flow Measuring Nozzle With Off-Site Power (Case B) - Thermal Power
15.4.2-13	Sequoyah Steam Line Break Upstream of Flow Measuring Nozzle With Off-Site Power (Case B) - RCS Flow
15.4.2-14	Sequoyah Steam Line Break Upstream of Flow Measuring Nozzle With Off-Site Power (Case B) - Steam Flow
15.4.2-15	Sequoyah Steam Line Break Upstream of Flow Measuring Nozzle With Off-Site Power (Case B) - Reactivity
15.4.2-16	Sequoyah Steam Line Break Upstream of Flow Measuring Nozzle With Off-Site Power (Case B) - Core Boron
15.4.2-17	Sequoyah Steam Line Break Upstream of Flow Measuring Nozzle With Off-Site Power (Case B) - System Pressure
15.4.2-18	Sequoyah Steam Line Break Upstream of Flow Measuring Nozzle With Off-Site Power (Case B) - Core Average Temperature
15.4.2-19	Sequoyah Steam Line Break Downstream of Flow Measuring Nozzle Without Off-Site Power (Case C) - Neutron Power
15.4.2-20	Sequoyah Steam Line Break Downstream of Flow Measuring Nozzle Without Off-Site Power (Case C) - Thermal Power
15.4.2-21	Sequoyah Steam Line Break Downstream of Flow Measuring Nozzle Without Off-Site Power (Case C) - RCS Flow
15.4.2-22	Sequoyah Steam Line Break Downstream of Flow Measuring Nozzle Without Off-Site Power (Case C) - Steam Flow
15.4.2-23	Sequoyah Steam Line Break Downstream of Flow Measuring Nozzle Without Off-Site Power (Case C) - Reactivity
15.4.2-24	Sequoyah Steam Line Break Downstream of Flow Measuring Nozzle Without Off-Site Power (Case C) - Core Boron
15.4.2-25	Sequoyah Steam Line Break Downstream of Flow Measuring Nozzle Without Off-Site Power (Case C) - System Pressure
15.4.2-26	Sequoyah Steam Line Break Downstream of Flow Measuring Nozzle Without Off-Site Power (Case C) - Core Average Temperature
15.4.2-27	Sequoyah Steam Line Break Upstream of Flow Measuring Nozzle Without Off-Site Power (Case D) - Neutron Power

LIST OF FIGURES

Number	Title
15.4.2-28	Sequoyah Steam Line Break Upstream of Flow Measuring Nozzle Without Off-Site Power (Case D) - Thermal Power
15.4.2-29	Sequoyah Steam Line Break Upstream of Flow Measuring Nozzle Without Off-Site Power (Case D) - RCS Flow
15.4.2-30	Sequoyah Steam Line Break Upstream of Flow Measuring Nozzle Without Off-Site Power (Case D) - Steam Flow
15.4.2-31	Sequoyah Steam Line Break Upstream of Flow Measuring Nozzle Without Off-Site Power (Case D) - Reactivity
15.4.2-32	Sequoyah Steam Line Break Upstream of Flow Measuring Nozzle Without Off-Site Power (Case D) - Core Boron
15.4.2-33	Sequoyah Steam Line Break Upstream of Flow Measuring Nozzle Without Off-Site Power (Case D) - System Pressure
15.4.2-34	Sequoyah Steam Line Break Upstream of Flow Measuring Nozzle Without Off-Site Power (Case D) - Core Average Temperature
15.4.2-35	Sequoyah Steam Line Break Downstream of RSG Outlet Nozzle With Off-Site Power (RSG - Case B) Neutron Power, Thermal Power vs Time
15.4.2-36	Sequoyah Steam Line Break Downstream of RSG Outlet Nozzle With Off-Site Power (RSG - Case B) RCS Flow Rate, Steam Flow vs Time
15.4.2-37	Sequoyah Steam Line Break Downstream of RSG Outlet Nozzle With Off-Site Power (RSG - Case B) Reactivity, Core Boron Concentration vs Time
15.4.2-38	Sequoyah Steam Line Break Downstream of RSG Outlet Nozzle With Off-Site Power (RSG - Case B) Pressurizer Pressure, RCS Average Temperature vs Time
15.4.2-39a	Major Rupture of a MFW Pipe - No Loop Pressurizer Water Volume
15.4.2-39b	Major Rupture of a MFW Pipe -No Loop Pressurizer Pressure
15.4.2-40a	Major Rupture of a MFW Pipe - No Loop Loop 1 Cold Leg, Hot Leg and Saturation Temperatures
15.4.2-40b	Major Rupture of a MFW Pipe - No Loop Intact Loop Cold Leg, Hot Leg and Saturation Temperatures
15.4.2-41a	Major Rupture of a MFW Pipe -Loop Pressurizer Water Volume
15.4.2-41b	Major Rupture of a MFW Pipe - Loop Pressurizer Pressure
15.4.2-42a	Major Rupture of a MFW Pipe - Loop Affected Loop Cold Leg, Hot Leg and Saturation Temperatures

LIST OF FIGURES

Number	Title
15.4.2-42b	Major Rupture of a MFW Pipe - Loop Intact Loop Cold Leg, Hot Leg and Saturation Temperatures
15.4.4-1	Locked Rotor, Neutron Power vs. Time
15.4.4-2	Locked Rotor, Thermal Power vs. Time
15.4.4-3	Locked Rotor, Core Flow vs. Time
15.4.4-4	Locked Rotor, Pressurizer Pressure vs. Time
15.4.4-5	Locked Rotor Clad Surface Temperature vs. Time
15.4.4-6	Deleted
15.4.4-7	Deleted
15.4.6-1	Rod Cluster Control Assembly Ejection, Nuclear Power vs. Time (EOL, HFP)
15.4.6-2	Rod Cluster Control Assembly Ejection, Fuel and Clad Temperature vs. Time (EOL, HFP)
15.4.6-3	Rod Cluster Control Assembly Ejection Nuclear Power vs. Time (EOL, HZP)
15.4.6-4	Rod Cluster Control Assembly Ejection Fuel and Clad Temperature vs. Time (EOL, HZP)
15.5.1-1	Loss of AC Power-Thyroid Dose
15.5.1-2	Loss of AC Power-Beta Dose
15.5.1-3	Loss of AC Power-Gamma Dose
15.5.3-1	Schematic of Leakage Path

15.0 ACCIDENT ANALYSES

A new main feedwater Leading Edge Flow Meter (LEFM) system was installed in SQN Units 1 and 2. The LEFM resulted in a 1.3% reduction in the calorimetric uncertainty of the secondary side power measurement. TVA took advantage of this reduction by making an equivalent 1.3% upgrade in rated thermal power. The new rated thermal power is 3455 MWt and the new calorimetric uncertainty is 0.7%. However, the value of rated thermal power plus calorimetric uncertainty is identical before and after the power level upgrade. Before the power level upgrade, the rated thermal power plus calorimetric uncertainty was 102% of 3411 MWt = 3479 MWt and after the power level upgrade it is 100.7% of 3455 MWt = 3479 MWt.

All FSAR Chapter 15 LOCA and non-LOCA safety analyses were evaluated relative to the power level upgrade. Transient analyses that assumed an initial core power of 102% of rated thermal power or greater were unaffected by the power level upgrade. Safety analyses performed at zero power conditions were also unaffected by the power level upgrade. The remainder of the Chapter 15 safety analyses were either insensitive to power level considerations or were bounded by other events. The key factor in the evaluation of the FSAR Chapter 15 events is a 1.3% power level upgrade coincident with an equivalent reduction in calorimetric uncertainty. Therefore, none of the Chapter 15 events were reanalyzed for the power level upgrade.

FSAR Chapter 15 LOCA and non-LOCA analyses were evaluated for the Unit 1 and Unit 2 replacement steam generators. The analyses (see Reference 28 and Reference 29) demonstrate that the acceptance criteria continue to be met subsequent to the steam generator replacement. The analysis for the OSGs continues to be applicable to the RSGs for tube plugging level up to 15 percent.

15.1 CONDITION I - NORMAL OPERATION AND OPERATIONAL TRANSIENTS

Condition I occurrences are those which are expected frequently or regularly in the course of power operation, refueling, maintenance, or maneuvering of the plant. As such, Condition I occurrences are accommodated with margin between any plant parameter and the value of that parameter which would require either automatic or manual protective action. In as much as Condition I occurrences occur frequently or regularly, they must be considered from the point of view of affecting the consequences of fault conditions (Conditions II, III and IV). In this regard, analysis of each fault condition described is generally based on a conservative set of initial conditions corresponding to the most adverse set of conditions which can occur during Condition I operation.

A typical list of Condition I events is listed below:

1. Steady state and shutdown operations

    a. Power operation (~15 to 100 percent of full power)

    b. Start up (or standby) (critical, 0 to 15 percent of full power)

    c. Hot shutdown (subcritical, Residual Heat Removal System isolated)

    d. Cold shutdown (subcritical, Residual Heat Removal System in operation)

    e. Refueling

2. Operation with permissible deviations

Various deviations which may occur during continued operation as permitted by the plant Technical Specifications must be considered in conjunction with other operational modes. These include:

a. Operation with components or systems out of service

b. Leakage from fuel with cladding defects

c. Activity in the reactor coolant

   i. Fission products

   ii. Corrosion products

   iii. Tritium

d. Operation with steam generator leaks up to the maximum allowed by Technical Specifications.

e. Operation with loss of one (redundant) DC system as permitted by Technical Specifications.

3. Operational transients

a. Plant heatup and cooldown (up to 100°F/hour) for the Reactor Coolant System; 200°F/hour for the pressurizer.

b. Step load changes (up to ± 10 percent)

c. Ramp load changes (up to 5 percent/minute)

d. Load rejection up to and including design load rejection transient

15.1.1 Optimization Of Control Systems

A setpoint study was performed in order to simulate performance of the reactor control and protection systems. Emphasis was placed on the development of a control system which will automatically maintain prescribed conditions in the plant even under the most conservative set of reactivity parameters with respect to both system stability and transient performance.

For each mode of plant operation, a group of optimum controller setpoints was determined. In areas where the resultant setpoints were different, compromises based on the optimum overall performance were made and verified. A consistent set of control system parameters was derived satisfying plant operational requirements throughout the core life and for power levels between 15 and 100 percent. The study comprised an analysis of the following control systems: Rod cluster control assembly, steam dump, steam generator level, pressurizer pressure and pressurizer level.

15.1.2 Initial Power Conditions Assumed In Accident Analyses

15.1.2.1 Power Rating

Table 15.1.2-1 lists the principal power rating values which are assumed in analyses performed in this section. Two ratings are given:

1. The guaranteed Nuclear Steam Supply System thermal power output. This power output includes the thermal power generated by the reactor coolant pumps.

2. The Engineered Safety Features design rating. The Westinghouse supplied Engineered Safety Features are designed for a thermal power higher than the guaranteed value in order not to preclude realization of future potential power capability. This higher thermal power value is designated as the Engineered Safety Features design rating. This power output includes the thermal power generated by the reactor coolant pumps.

Where initial power operating conditions are assumed in accident analyses, the "guaranteed Nuclear Steam Supply System thermal power output" plus allowance for errors in steady state power determination is assumed. Where demonstration of adequacy of the containment and Engineered Safety Features are concerned, the "Engineered Safety Features design rating" plus allowance for error is assumed. The thermal power values for each transient analyzed are given in Table 15.1.2-2.

15.1.2.2 Initial Conditions

For accident evaluation, the initial conditions are obtained by adding maximum steady state errors to rated values. The following steady state errors are considered:

1.	Core power	+ 0.7 percent allowance calorimetric error based on LEFM on feedwater header (Reference 27)
2.	Average Reactor Coolant System temperature	+ 4°F allowance for deadband and measurement error*
3.	Pressurizer pressure	+ 30/-42 psi allowance for steady state fluctuations and measurement error**

*A uniform temperature distribution between 578.2°F and 583°F was used in the realistic large break loss-of-coolant accident analysis consistent with the realistic analysis methodology.

**Pressurizer pressure transmitters associated with this function have a thermal non-repeatability bias only associated with abnormal and accident operating temperatures. This bias is not applied to the low end of the pressurizer operating range for DNB calculations because they are performed for normal operating conditions where the bias does not exist. For normal operating conditions, the control system uncertainty of ±30 psi without the thermal non-repeatability bias applies (Reference 30).

Installation of the LEFM effectively reduces the 2% calorimetric error to 0.7%. However, the results presented in Chapter 15 continue to be based on 2% error because they are based on the original rated thermal power of 3411 MWt. 102% of the original rated thermal power of 3411 MWt is equivalent to 100.7% of the upgraded rated thermal power of 3455 MWt.

The text of Chapter 15 contains several references to a rated thermal power of 3411 MWt in combination with a calorimetric uncertainty of 2%. Unless indicated otherwise, plots and results related to reactor power are reported in terms of the original rated thermal power and calorimetric uncertainty. In the interest of brevity, the references to the original rated thermal power and calorimetric uncertainty were left unchanged since the power level upgrade is exactly balanced by a reduction in calorimetric uncertainty.

The magnitude of the errors, not the absolute temperatures, are about the same.

The outer surface of the fuel rod at the hot spot operates at a temperature of approximately 660°F for steady state operation at rated power throughout core life due to the onset of nucleate boiling. Initially (beginning of life), this temperature is that of the cladding metal outer surface. During operation over the life of the core, the buildup of oxides and crud on the fuel rod surface causes the cladding surface temperature to increase. Allowance is made in the fuel center melt evaluation for this temperature rise. Since the thermal hydraulic design basis limits DNB, adequate heat transfer is provided between the fuel cladding and the reactor coolant so that the core thermal output is not limited by considerations of the cladding temperature. These temperatures are calculated using the Westinghouse fuel rod model (Reference 1) which has been reviewed and approved by the NRC.

15.1.2.3 Power Distribution

The transient response of the reactor system is dependent on the initial power distribution. The nuclear design of the reactor core minimizes adverse power distribution through the placement of control rods and operation instructions. The power distribution may be characterized by the radial factor $F_{\Delta H}$ and the total peaking factor F_q. The peaking factor limits are given in the technical specifications.

For transients which may be DNB limited, the radial peaking factor is of importance. The radial peaking factor increases with decreasing power level due to rod insertion. This increase in $F_{\Delta H}$ is included in the core limits illustrated in Figure 15.1.3-1. All transients that may be DNB limited are assumed to begin with $F_{\Delta H}$ consistent with the initial power level defined in the technical specifications. The axial power shape used in the DNB calculation is the 1.55 chopped cosine as discussed in Subparagraph 4.4.3.2.2.

For transients which may be overpower limited, the total peaking factor F_q is of importance. The value of F_q may increase with decreasing power level such that full power hot spot heat flux is not exceeded, i.e., F_q * Power = design hot spot heat flux. All transients that may be overpower limited are assumed to begin with a value of F_q consistent with the initial power level as defined in the technical specifications.

Analyses of transients which are overtemperature limited must use a variable radial peak ($F_{\Delta H}$); see Section 15.1.3.

15.1.3 Trip Points And Time Delays To Trip Assumed In Accident Analyses

A reactor trip signal acts to open two trip breakers connected in series feeding power to the control rod drive mechanisms. The loss of power to the mechanism coils causes the mechanisms to release the rod cluster control assemblies which then fall by gravity into the core. There are various instrumentation delays associated with each trip function, including delays in signal actuation, in opening the trip breakers, and in the release of the rods by the mechanisms. The total delay to trip is defined as the time delay from the time that trip conditions are reached to the time the rods are free and begin to fall. Limiting trip setpoints assumed in accident analyses and the time delay assumed for each trip function are given in Table 15.1.3-1. Reference is made in that table to overtemperature and overpower ΔT trip shown in Figure 15.1.3-1.

For analyses which rely on the overtemperature ΔT trip for core protection, a variable radial peak ($F_{\Delta H}$) must be used as part of the design peak during DNBR calculations. A variable design peak $F_{\Delta H}$ is employed such that the safety limit lines—lines for which the DNBR is equal to the safety analysis limit in the design hot channel for thermal design flow—are equal to the overtemperature ΔT lines. The variable design peak $F_{\Delta H}$ is shown in Figure 15.1.3-2.

Accident analyses which assume the S/G Low-Low Water Level trip signal to initiate protection functions may be affected by the Environmental Allowance Modifier (EAM) and the Trip Time Delay (TTD) (References 18 and 19) systems, which were developed to reduce the incidence of unnecessary feedwater related reactor trips.

The EAM system permits plant operation with a relatively low setpoint for the S/G Low-Low Water Level trip, which does not include the full environmental error allowance. The EAM will automatically enable a higher Low-Low level trip setpoint, which includes the full environmental error allowance, whenever an adverse containment environment is indicated by a rise in containment pressure.

The TTD imposes a system of pre-determined delays upon the S/G Low-Low level reactor trip and auxiliary feedwater initiation. The values of these delays are based upon (1) the prevailing power level at the time the Low-Low level trip setpoint is reached, and by (2) the number of steam generators in which the Low-Low level trip setpoint is reached. The TTD delays the reactor trip and auxiliary feedwater actuation in order to provide time for corrective action by the operator or for natural stabilization of shrink/swell water level transients. The TTD is primarily designed for low power or startup operations.

The overtemperature ΔT setpoints shown in Figure 15.1.3-1 along with all other evaluated DNBR's were calculated assuming approximately 4 percent margin in the critical heat flux calculation, as discussed in Paragraph 4.4.2.1.

The difference between the limiting trip point assumed for the analysis and the nominal trip point represents an allowance for instrumentation channel error and setpoint error. During preoperational start-up tests, it was demonstrated that actual instrument errors and time delays are equal to or less than the assumed values.

High and low power range neutron flux trip setpoints allow for a 2% calorimetric uncertainty and the installation of the LEFM effectively reduces the calorimetric uncertainty to 0.7%. As a result of the reduction in calorimetric uncertainty and equivalent upgrade in rated thermal power, the safety analysis high and low power range neutron flux trip setpoints will be redefined based on the new power level. The power range neutron flux (high setting) will be defined as 116.5% of 3455 MWt and the power range neutron flux (low setting) will be defined as 34.6% of 3455 MWt. Redefining these setpoints makes additional analysis unnecessary because the new values are equivalent, in terms of total megawatts, to the current licensing basis at 3411 MWt (116.5% of 3455 MWt = 118% of 3411 MWt and 34.6% of 3455 MWt = 35% of 3411 MWt).

The text of Chapter 15 contains references to high and low power range neutron flux trip setpoints of 118% and 35% of the original rated thermal power, respectively. Unless indicated otherwise, plots and results of transients that modeled these trips used the original setpoint definitions. In the interest of brevity, the references to the original setpoints were left unchanged since the new setpoints represent identical values in terms of total megawatts.

15.1.4 Instrumentation Drift And Calorimetric Error - Power Range Neutron Flux

The instrumentation drift and calorimetric errors used in establishing the maximum overpower setpoint are presented in References 17 and 27.

The calorimetric error is the error assumed in the determination of core thermal power as obtained from secondary plant measurements. The total ion chamber current (sum of the top and bottom sections) is calibrated (set equal) to this measured power on a periodic basis. The secondary power is obtained from measurement of feedwater flow, feedwater inlet temperature to the steam generators and steam pressure. High accuracy instrumentation is provided for these measurements with accuracy tolerances much tighter than those which would be required to control feedwater flow.

15.1.5 Rod Cluster Control Assembly Insertion Characteristic

The negative reactivity insertion following a reactor trip is a function of the acceleration of the rod cluster control assemblies and the variation in rod worth as a function of rod position.

With respect to accident analyses, the critical parameter is the time of insertion up to the dashpot entry or approximately 85 percent of the rod cluster travel. For accident analyses it is conservatively assumed that the insertion time to dashpot entry is 2.7 seconds. The rod cluster control assembly position versus time assumed in accident analyses is shown in Figure 15.1.5-1.

Figure 15.1.5-2 shows the fraction of total negative reactivity insertion for a core where the axial distribution is skewed to the lower region of the core. An axial distribution which is skewed to the lower region of the core can arise from a xenon oscillation or can be considered as representing a transient axial distribution which would exist after the rod cluster control assembly bank had already traveled some distance after trip. This lower curve is used as input to all point kinetics core models used in transient analyses.

There is inherent conservatism in the use of this curve in that it is based on a skewed distribution which would exist relatively infrequently. For cases other than those associated with xenon oscillations significant negative reactivity would have been inserted due to the more favorable axial distribution existing prior to trip.

The normalized rod cluster control assembly negative reactivity insertion versus time is shown in Figure 15.1.5-3. The curve shown in this figure was obtained from Figures 15.1.5-1 and 15.1.5-2. A total negative reactivity insertion following trip of 4 percent $\Delta k/k$ is assumed in the transient analyses except where specifically noted otherwise. This assumption is conservative with respect to the calculated trip reactivity worth available as shown in Table 4.3.2-3.

The normalized rod cluster control assembly negative reactivity insertion versus time curve for an axial power distribution skewed to the bottom (Figure 15.1.5-3) is used in transient analyses. Where special analyses require use of three dimensional or axial one dimensional core models, the negative reactivity insertion resulting from reactor trip is calculated directly by the reactor kinetic code and is not separable from other reactivity feedback effects. In this case, the rod cluster control assembly position versus time of Figure 15.1.5-1 is used as code input.

15.1.5.1 Fuel Assembly Bowing

Exposure dependent distortion has been experienced in the shapes of Mark-BW fuel assemblies. This distortion develops primarily as lateral displacement of the assembly cross section along its axis, such that an assembly can take on a slight “S” or “W” shaped bowing along its length. In rodded assemblies this bowing can increase control rod insertion times due to increases in friction between control rods and their guide tubes. In the interim while this condition is corrected, monitoring and engineering calculations are performed to measure assembly distortion, to conservatively predict the insertion times of individual control rods, and to determine any affects on safety analysis assumptions or results.

Experience has shown that control rods can be expected to reliably arrive at the dashpot within the maximum time allowed per Technical Specification 3.1.4, SR 3.1.4.3, and per Figures 15.1.5-1 and 15.1.5-3. However, the potential exists that one or more control rods could, over the period of an operating cycle, become slow to settle (STS), meaning that the rod would not complete the remaining travel from dashpot entry to the fully inserted position within the time indicated in Figures 15.1.5-1 and 15.1.5-3. As stated in Section 15.1.5 above, in safety analyses the critical parameter is the time of insertion up to the dashpot entry. Evaluations have shown that safety analysis acceptance criteria can be met even when multiple control rods stop at the dashpot entry, resulting in incomplete rod insertion (IRI).

Monitoring of fuel assembly bowing is achieved through analysis of (1) drag test results, (2) post-irradiation examinations, and (3) rod drop time surveillance test results. Drag tests measure the friction forces that resist withdrawal of a control rod assembly from a fuel assembly. These tests can be performed while the assembly is located in the reactor core or the spent fuel pool. Post irradiation examinations measure any actual bowing distortion in spent fuel assemblies. Rod drop time surveillances measure the elapsed time to dashpot entry and beyond. Rod drop surveillance testing is required prior to each operating cycle per procedure and can also be performed during forced outages to supplement monitoring data or to validate projections.

Correlations and trends in monitoring data are analyzed to conservatively project any increases in rod insertion times over the course of each operating cycle. All rods at risk of becoming STS during a cycle are evaluated for their combined affect on the assumptions and outcomes in all applicable Chapter 15 events. All rods at risk of becoming STS are conservatively assumed to be IRIs stuck at the dashpot entry. Results of these evaluations must show that all applicable safety analysis acceptance criteria are met.

15.1.6 Reactivity Coefficients

The transient response of the reactor system is dependent on reactivity feedback effects, in particular the moderator temperature coefficient and the Doppler power coefficient. These reactivity coefficients and their values are discussed in detail in Chapter 4.

In the analysis of certain events, conservatism requires the use of large reactivity coefficient values whereas in the analysis of other events, conservatism requires the use of small reactivity coefficient values. Some analyses such as loss of reactor coolant from cracks or ruptures in the Reactor Coolant System do not depend on reactivity feedback effects. The values used are given in Table 15.1.2-2; reference is made in that table to Figure 15.1.6-1 which shows the upper and lower Doppler power coefficients, as a function of power, used in the transient analysis. The justification for use of conservatively large versus small reactivity coefficient values is treated on an event by event basis. To facilitate comparison, individual sections in which justification for the use of large or small reactivity coefficient values is to be found are referenced below:

Condition II Events		Section
1.	Uncontrolled Rod Cluster Control Assembly Bank Withdrawal From a Subcritical Condition	15.2.1
2.	Uncontrolled Rod Cluster Control Assembly Bank Withdrawal At Power	15.2.2
3.	Rod Cluster Control Assembly Misalignment	15.2.3
4.	Uncontrolled Boron Dilution	15.2.4
5.	Partial Loss of Forced Reactor Coolant Flow	15.2.5
6.	Startup Of An Inactive Reactor Coolant Loop	15.2.6
7.	Loss of External Electrical Load And/Or Turbine Trip	15.2.7
8.	Loss of Normal Feedwater	15.2.8
9.	Loss Of All Off-Site Power To The Station Auxiliaries (Station Blackout)	15.2.9
10.	Excessive Heat Removal Due to Feedwater System Malfunctions	15.2.10
11.	Excessive Load Increase Incident	15.2.11
12.	Accidental Depressurization of the Reactor Coolant System	15.2.12
13.	Accidental Depressurization of Main Steam System	15.2.13
14.	Spurious Operation of the Safety Injection System At Power	15.2.14

Condition III Events

1.	Complete Loss of Forced Reactor Coolant Flow	15.3.4
2.	Single Rod Cluster Control Assembly Withdrawal, At Full Power	15.3.6

Condition IV Events

1.	Rupture of A Steam Pipe Rupture of A Feedwater Pipe	15.4.2.1 15.4.2.2
2.	Single Reactor Coolant Pump Locked Rotor	15.4.4
3.	Rupture Of A Control Rod Drive Mechanism Housing (Rod Cluster Control Assembly Ejection)	15.4.6

15.1.7 Fission Product Inventories

15.1.7.1 Activities in the Core

The design basis LOCA source terms are based on an average 1000 EFPD reactor core with an enrichment of 5% U235. The reactor core inventory analysis was performed with the ORIGIN-S computer code (Ref. 19a) by Oak Ridge National Laboratory. The fraction of reactor core releases into the containment are based on TID-14844 (Ref. 2) methodology which consists of an instantaneous release of 100% of the noble gases, 50% of the halogens, and 1% of the solids in the fission product inventory. These isotopes are given in Table 15.5.3.8. The subset of these isotopes which are important from a health hazards point of view are given in Table 15.5.3-5. The isotopes included in Table 15.5.3-5 are the isotopes controlling from considerations of inhalation dose (iodines) and from external dose due to immersion (noble gases).

15.1.7.2 Activities in the Fuel Pellet Cladding Gap

The computed gap activities (Table 15.1.7-1) are based on buildup in the fuel from the fission process and diffusion to the gap at rates dependent on the operating temperature. The temperature dependence is accounted for by determining the core fuel fraction operating within each of nine temperature regions (Table 15.1.7- 2), each with a release rate to the gap dependent of the mean fuel temperature within that region. Since the temperature distribution changes during core life, the highest expected values are used. The temperature dependence of the diffusion coefficient, D′, for Xe and Kr in UO_2, follows the Arrhenius law:

$$D'(T) = D'(1673)\exp - \left[\frac{E}{R}\left(\frac{1}{T} - \frac{1}{1673}\right)\right]$$

where

D′(T) = diffusion coefficient at temperature T, sec^{-1}

D′(1673) = 1×10^{-11} sec^{-1}, diffusion coefficient at 1673°K

E	=	82 kilocalories/mole, activation energy
R	=	1.99×10^{-3} kilocalories/mole - °K, gas constant
T	=	temperature, °K

The above expression is valid for temperatures above 1100°C. Below 1100°C fission gas release occurs mainly by two temperature independent mechanisms, recoil and knock out, and is predicted by using D' at 1100°C. The value used for D' (1673°K), based on data at burnups greater than 10^{19} fissions/cc, accounts for possible fission gas release by other mechanisms as well as pellet cracking during irradiation.

The diffusion coefficient for iodine isotopes was conservatively assumed to be the same as for Xe and Kr. Toner and Scott (Reference 4) observed that iodine diffuses in UO_2 at about the same rate as Xe and Kr and has about the same activation energy. Data reported by Belle (Reference 5) indicate that the iodine diffuses at slightly slower rates than Xe and Kr.

With the diffusion coefficient determined for the fuel temperature region of interest, the fraction of radioactive fission gas which crosses the fuel boundary into the fuel rod gap is found from:

$$f = 3\sqrt{\frac{D'}{\lambda}} \quad \mathrm{Coth}\sqrt{\frac{\lambda}{D'}} - \sqrt{\frac{D'}{\lambda}}$$

Where:

f	=	fraction of a given radioactive fission gas in fuel rod gap
λ	=	fission gas decay constant, sec^{-1}
D'	=	diffusion coefficient, Sec^{-1}

The above expression is the steady-state solution of the diffusion equation in spherical geometry as given by Booth (Reference 6).

Table 15.1.7-1 lists the total core activities as well as activities present in the gap for each pertinent isotope obtained using the above equations and the fuel temperature distribution given in Table 15.1.7-2.

The activities in the reactor coolant, as well as in the volume control tank, pressurizer and gaseous waste processing system, are given in Chapter 11 including the data on which the computation of these activities are based.

15.1.8 Residual Decay Heat

Residual heat in a subcritical core consists of:

1. Fission product decay energy,

2. Decay of neutron capture products, and

3. Residual fissions due to the effect of delayed neutrons.

These constituents are discussed separately in the following paragraphs.

15.1.8.1 Fission Product Decay

For short times (< 10^3 seconds) after shutdown, data on yields of short half life isotopes is sparse. Very little experimental data is available for the γ-ray contributions and even less for the β-ray contribution. Several authors have compiled the available data into a conservative estimate of fission product decay energy for short times after shutdown, notably Shure (Reference 7), Dudziak (Reference 8), and Teage. Of these three selections, Shure's curve is the highest and it is based on the data of Stehn and Clancy (Reference 9) and Obenshain and Foderaro (Reference 10).

The fission product contribution to decay heat which has been assumed in the accident analyses is the curve of Shure increased by 20 percent for conservatism. This curve with the 20 percent factor included is shown in Figure 15.1.8-1.

15.1.8.2 Decay of U-238 Capture Products

Betas and gammas from the decay of U-239 (23.5 minute half-life) and Np-239 (2.35 day half-life) contribute significantly to the heat generation after shutdown. The cross section for production of these isotopes and their decay schemes are relatively well known. For long irradiation times their contribution can be written as:

$$P_1/P_o = \frac{E_{\gamma 1} + E_{\beta 1}}{200\ \text{Mev}}\ c(1+a)\, e^{-\lambda_1 t}\ \text{watts/watts}$$

$$P_2/P_o = \frac{E_{\gamma 2} + E_{\beta 2}}{200\text{Mev}}\, c(1+a)\ \left[\frac{\lambda_2}{\lambda_1 - \lambda_2}\left(e^{-\lambda_2 t} - e^{-\lambda_1 t}\right) + e^{-\lambda_2 t}\ \text{watts / watts}\right]$$

Where:

P_1/P_o is the energy from U-239 decay

P_2/P_o is the energy from Np-239 decay

t is the time after shutdown (seconds)

c (1+a) is the ratio of U-238 captures to total fissions = 0.6(1+.2)

λ_1 = the decay constant of U-239 = 4.91 x 10^{-4} seconds $^{-1}$

λ_2 = the decay constant of Np-239 decay = 3.41 x 10^{-6} seconds $^{-1}$

$E_{\gamma 1}$ = total γ-ray energy from U-239 decay = .06 Mev

$E_{\gamma 2}$ = total γ-ray energy from Np-239 decay = .30 Mev

$E_{ß1}$ = total ß-ray energy from U-239 decay = 1/3 x 1.18 Mev

$E_{ß2}$ = total ß-ray energy from Np-239 decay = 1/3 x 0.43 Mev

(Two-thirds of the potential ß-energy is assumed to escape by the accompanying neutrinos.)

This expression with a margin of 10 percent is shown in Figure 15.1.8-1. The 10 percent margin, compared to 20 percent for fission product decay, is justified by the availability of the basic data required for this analysis. The decay of other isotopes, produced by neutron reactions other than fissions, is neglected.

15.1.8.3 Residual Fissions

The time dependence of residual fission power after shutdown depends on core properties throughout a transient under consideration. Core average conditions are more conservative for the calculation of reactivity and power level than actual local conditions as they would exist in hot areas of the core. Thus, unless otherwise stated in the text, static power shapes have been assumed in the analyses and these are factored by the time behavior of core average fission power calculated by a point model kinetics calculation with six delayed neutron groups.

For the purpose of illustration only a one delay neutron group calculation, with a constant shutdown reactivity of -4 percent $\Delta k/k$, is shown in Figure 15.1.8-1.

15.1.8.4 Decay Heat Following Loss of Coolant Accident

For a large break loss-of-coolant accident the core is rapidly shut down by void formation such that heat generation comes from fission product decay. The decay heat assumed by the analysis is based on the 1979 ANS standard for decay heat from U235 with fully saturated decay chains, corresponding to infinite operation, assuming 200 MeV per fission. Differing from the base Reference 67 evaluation model approach, the uncertainty for the decay heat parameter is set to zero and no sampling is done on this parameter. The choice of infinite operation with pure U235 fission product decay heat provides a base model that is conservative relative to the decay heat for finite operation For the S-RELAP5 calculation, the heat is conservatively assumed to be generated within the fuel pellet.

15.1.9 Computer Codes Utilized

Summaries of some of the principal computer codes used in transient analyses are given below. Other codes, in particular, very specialized codes in which the modeling has been developed to simulate one given accident, which consequently has a direct bearing on the analysis of the accident itself, are either summarized or referenced in their respective accident analyses sections. The codes used in the analyses of each transient have been listed in Table 15.1.2-2.

15.1.9.1 FACTRAN

FACTRAN calculates the transient temperature distribution in a cross section of a metal clad UO_2 fuel rod and the transient heat flux at the surface of the clad using as input the nuclear power and the time-dependent coolant parameters (pressure, flow, temperature, density). The code uses a fuel model which exhibits the following features simultaneously:

1. A sufficiently large number of radial space increments to handle fast transients such as rod ejection accidents.

2. Material properties which are functions of temperature and a sophisticated fuel-to-clad gap heat transfer calculation.

3. The necessary calculations to handle post-DNB transients: film boiling heat transfer correlations, zirconium alloy water reaction and partial melting of the materials.

The gap heat transfer coefficient is calculated according to an elastic pellet model (refer to Figure 15.1.9-1). The thermal expansion of the pellet is calculated as the sum of the radial (one-dimensional) expansions of the rings. Each ring is assumed to expand freely. The cladding diameter is calculated based on thermal expansion and internal and external pressures.

If the outside radius of the expanded pellet is smaller than the inside radius of the expanded clad, there is no fuel-clad contact and the gap conductance is calculated on the basis of the thermal conductivity of the gas contained in the gap. If the pellet's outside radius so calculated is larger than the clad inside radius (negative gap), the pellet and the clad are pictured as exerting upon each other a pressure sufficiently important to reduce the gap to zero by elastic deformation of both. This contact pressure determines the gap heat transfer coefficient.

FACTRAN is further discussed in Reference 11.

15.1.9.2 MARVEL

The MARVEL code is used to determine the detailed transient behavior of multi-loop pressurized water reactor systems caused by prescribed initial perturbations in process parameters. The code is useful in predicting plant behavior when different conditions are present in the loops. For analytical purposes, the physical, thermal and hydraulic characteristics of a multi-loop plant are represented by two "equivalent" loops. The perturbation is considered to occur in one of the equivalent loops which may represent one or more physical loops. The other equivalent loop thus represents in lumped form, the remaining loops in the plant.

The code simulates the coolant flow through the reactor vessel, hot leg, cold leg, steam generator plus the pressurizer surge line. Neutron kinetics, fuel-clad heat transfer and the rod control system characteristics are modeled. Simulation of the Reactor Trip System, Engineered Safety Features (Safety Injection) and Chemical and Volume Control System is provided.

MARVEL also has the capability of calculating the transient value of DNB ratio based on the input from the core limits illustrated on Figure 15.1.3-1. The core limits represent the minimum value of DNBR as calculated for a typical or thimble cell.

MARVEL is further discussed in Reference 12.

15.1.9.3 LOFTRAN

The LOFTRAN program is used for studies of transient response of a pressurized water reactor system to specified perturbations in process parameters. LOFTRAN simulates a multi-loop system by a lumped parameter single loop model containing reactor vessel, hot and cold leg piping, steam generator (tube and shell sides) and the pressurizer. The pressurizer heaters, spray, relief and safety valves are also considered in the program. Point model neutron kinetics, and reactivity effects of the moderator, fuel, boron and rods are included. The secondary side of the steam generator utilizes a homogeneous, saturated mixture for the thermal transients and a water level correlation for indication and control. The reactor protection system is simulated to include reactor trips on neutron flux, overpower and overtemperature reactor coolant delta-T, high and low pressurizer pressure, low RCS flow, and high pressurizer level. Control systems are also simulated including rod control, steam dump, feedwater control and pressurizer pressure control. The Safety Injection System including the accumulators is also modeled.

LOFTRAN is a versatile program which is suited to both accident evaluation and control studies as well as parameter sizing.

LOFTRAN also has the capability of calculating the transient value of DNB ratio based on the input from the core limits illustrated on Figure 15.1.3-1. The core limits represent the minimum value of DNBR as calculated for typical or thimble cell. LOFTRAN is further discussed in Reference 13.

15.1.9.4 LEOPARD

The LEOPARD computer program determines fast and thermal spectra, using only basic geometry and temperature data. The code optionally computes fuel depletion effects for a dimensionless reactor and recomputes the spectra before each discrete burnup step.

LEOPARD is further described in Reference 14.

15.1.9.5 TURTLE

TURTLE is a two-group, two-dimensional neutron diffusion code featuring a direct treatment of the nonlinear effect of xenon, enthalpy, and Doppler. Fuel depletion is allowed.

TURTLE was written for the study of azimuthal xenon oscillations, but the code is useful for general analysis. The input is simple, fuel management is handled directly, and a boron criticality search is allowed.

TURTLE is further described in Reference 15.

15.1.9.6 TWINKLE

The TWINKLE program is a multi-dimensional spatial neutron kinetics code, which was patterned after steady-state codes presently used for reactor core design. The code uses an implicit

finite-difference method to solve the two-group transient neutron diffusion equations in one, two and three dimensions. The code uses six delayed neutron groups and contains a detailed multi-region fuel-clad-coolant heat transfer model for calculating pointwise doppler and moderator feedback effects. The code handles up to 2000 spatial points, and performs its own steady state initialization. Aside from basic cross-section data and thermal-hydraulic parameters, the code accepts as input basic driving functions such as inlet temperature, pressure, flow, boron concentration, control rod motion, and others. Various edits provide channelwise power, axial offset, enthalpy, volumetric surge, pointwise power, fuel temperatures, and so on.

The TWINKLE code is used to predict the kinetic behavior of a reactor for transients which cause a major perturbation in the spatial neutron flux distribution.

TWINKLE is further described in Reference 16.

15.1.9.7 THINC

The THINC code is described in Section 4.4.3.1.

15.1.9.8 RELAP5/MOD2-B&W

RELAP5/MOD2-B&W is a BWNT adaptation of the Idaho National Engineering Laboratory code RELAP5/MOD2. The code, developed for best-estimate transient simulation of pressurized water reactors, has been modified to include models required for licensing analysis. Modeling capabilities are associated with the analysis of large and small break LOCAs, as well as operational transients defining the safety envelope of a reactor. The latter class of transients include Anticipated Transient Without Scram, Loss of Offsite Power, Loss of Feedwater, and Loss of RCS Flow transients. The code has been benchmarked extensively to existing experimental data for regulatory approval of its use in analyzing LOCA and Non-LOCA transients. RELAP5/MOD2-B&W is documented in topical BAW-10164 (Reference 20).

15.1.9.9 S-RELAP5

This code is used for the system calculation for analysis of large break LOCAs. The field equations are basically the same form as RELAP5/MOD2 with the addition of full two-dimensional momentum equations. This two dimensional capability is only applied within the reactor vessel in the Realistic Large Break LOCA methodology, but can be applied anywhere in the reactor coolant system through input. The S-RELAP5 code structure was modified to be essentially the same as RELAP5/MOD3. The coding for reactor kinetics, control systems, and trip systems was also replaced from RELAP5/MOD3. Initial fuel conditions are supplied by the realistic fuel performance code, RODEX3A. To be consistent, the fuel deformation and conductivity models from RODEX3A were included in S-RELAP5. Capability to interface with a concurrent calculation of containment backpressure using the ICECON code was added. S-RELAP5 is documented in topical report EMF-2100 (P) (Reference 21).

15.1.9.10 RODEX3A

RODEX3A calculates fuel rod performance for Realistic Large Break LOCA analysis. In particular, the initial operating temperature of the fuel pellets (as stored energy) and the internal fuel rod gas pressure are provided as functions of fuel exposure and power history. RODEX3A is documented in topical report ANF-90-145(P)(A) (Reference 22).

15.1.9.11 LYNXT

LYNXT is approved by the NRC and provides the capability for single-pass core thermal-hydraulic analysis for both steady state and transient conditions. It also has the capability to analyze

conditions with high lateral flow and/or recirculating flow, such as encountered in the analysis of a steamline break with reactor coolant pumps off. The single pass LYNXT model has been extensively benchmarked to multi-pass analyses and appropriate experimental data. LYNXT is used almost exclusively for determining core flow redistribution and for predicting the DNB performance of various fuel designs.

LYNXT has been qualified for the BWC, BHTP, BWU-N, Biasi, BWCMV, BWCMV-A, B&W2 and W3 correlations by data base analysis. In each case, where this evaluation has been performed, LYNXT supported the licensed DNBR limit for the respective CHF correlation. Some of the features of LYNXT include:

1) Reverse/recirculating flow option
2) Exit pressure profile boundary condition and transient pressure drop boundary condition
3) Generalized DNBR subroutine
4) Internal code generation of the axial power shape
5) Transient radial and axial power shapes input capability
6) Dynamic gap conductance fuel model
7) ANSI Fortran 77 and self-contained
8) Enhancements to the conducting wall model to allow rectangular and cylindrical walls

LYNXT is described in topical report BAW-10156 (Reference 23).

15.1.9.12 TACO3

The TACO3 code, with its Fuel Rod Gas Pressure Criteria, is a state-of-the-art methodology for fuel rod thermal performance analysis. This package applies to fuel rod burnups to 62,000 MWd/mtU, with possible extrapolation to 65,000 MWd/mtU. The TACO3 fuel performance code is a major evolution in the prediction of fuel rod performance. TACO3 uses best-estimate models benchmarked to an extensive data base of fuel performance data from numerous industry sponsored experimental programs. TACO3 uses a complete set of new thermal and mechanical models, as well as new fuel and cladding material relations. Several models represent advances in the state-of-the-art. The TACO3 fuel temperature predictions have less uncertainty than other comparable codes. The NRC has reviewed and approved TACO3. TACO3 predicts the following as a function of burnup:

- Centerline Fuel Melt
- Fuel Rod Internal Gas Pressure
- LOCA Analysis Initialization Parameters
- Cladding Strain
- Creep Collapse Analysis Initialization Parameters

TACO3 uses best-estimate inputs to provide best-estimate predictions. Statistical evaluations are performed to estimate uncertainties and provide conservative results for use in licensing evaluations. Code and power prediction uncertainties and manufacturing variations are considered for internal gas pressure uncertainties. Statistical parameters obtained from the analysis of an extensive code benchmark database evaluate fuel temperature uncertainties. Transient fission gas release and cladding oxide effects are also represented to provide appropriate conservatism. TACO3 is described in topical report BAW-10162 (Reference 24).

15.1.9.13 NEMO (BAW-10180-A)

NEMO is a nodal neutronics code used to calculate power distributions and perform reactivity analyses of pressurized water reactors (PWRs). The nodal balance equation is solved to determine the neutron flux, source, relative power density (which includes pin power reconstruction to obtain detailed pin power profiles), and reactivity of the core. NEMO employs a two-group nodal expansion method to determine the currents and fluxes at the surface of each node in the core. Two or three dimensional problems can be analyzed with thermal-hydraulic feedback and isotopic depletion. Microscopic cross sections are required for the isotopic depletion calculation and are obtained from pre-calculated cross section database files. Interpolation of these cross section tables, one for each fuel enrichment/burnable poison combination, is performed versus a six-dimensional space of independent variables: burnup, boron, xenon, moderator specific volume, fuel temperature, and a spectral parameter.

NEMO has been applied to a wide array of problem solutions, including: development of reload fuel assembly loading patterns, calculation of startup physics control rod worths and reactivity coefficients and defects, core maneuvering analyses, core follow, provide input parameters to safety analysis evaluation, and generation of neutron flux signal to power factors for online measurement systems. A detailed description of NEMO is given in topical report BAW-10180 (Reference 25).

15.1.10 Loss Of One (Redundant) DC System

15.1.10.1 Identification of Causes

The plant DC System serves as a power source for DC pump motors, controls, and instrumentation. A description of this system and its redundant design are presented in Subsection 8.3.2. The loss of one DC System will be defined for the purposes of this analysis as the loss of one battery and one battery charger.

15.1.10.2 Analysis of Effects and Consequences

As discussed in Subsection 8.3.2, the plant has been designed so that the loss of one DC System will not affect the safe operation of the plant.

15.1.11 References

1. Supplemental information on fuel design transmitted from R. Salvatori, Westinghouse NES, to D. Knuth, AEC, as attachments to letters NS-SL-518 (12/22/72), NS-SL-521 (1/4/73), NS-SL-524 (1/4/73) and NS-SL-543 (1/12/73, (Westinghouse NES Proprietary); and supplemental information on fuel design transmitted from R. Salvatori, Westinghouse NES, to D. Knuth, AEC, as attachments to letters NS-SL-527 (1/2/73) and NS-SL-544 (1/12/73).

2. J. J. DiNunno, et al , "Calculation of Distance Factors for Power and Test Reactor Sites," TID-14844, March 1962.

3. M. E. Meek and B. F. Rider, "Summary of Fission Product Yields for U-235, U-238, Pu-239, and Pu-241 at Thermal Fission Spectrum and 14 Mev Neutron Energies," APED-5398, March, 1968.

4. D. F. Toner, and J. S. Scott, "Fission-Product Release from UO_2," Nuc. Safety 3, No. 2, 15-20 December 1961.

5. J. Belle, "Uranium Dioxide" Properties and Nuclear Applications," Naval Reactors, Division of Reactor Development United States Atomic Energy Commission, 1961.

6. A. H. Booth, DCI-27, "A Suggested Method for Calculating the Diffusion of Radioactive Rare Gas Fission Products From UO_2 Fuel Elements," 1957.

7. K. Shure, "Fission Product Decay Energy" in Bettis Technical Review," WAPD-BT-24, p. 1-17, December, 1961.

8. K. Shure and D. J. Dudziak, "Calculating Energy Released by Fission Products," Trans. Am. Nucl. Soc. 4 (1) 30 (1961).

9. U.K.A.E.A. Decay Heat Standard.10. J. R. Stehn and E. F. Clancy, "Fission-Product Radioactivity and Heat Generation" in "Proceedings of the Second United Nations International Conference on the Peaceful Uses of Atomic Energy, Geneva, 1958," Volume 13, pp. 49-54, United Nations, Geneva, 1958.

10. F. E. Obenshain and A. H. Foderaro, "Energy from Fission Product Decay," WAPD-P-652, 1955.

11. C. Hunin, "FACTRAN, a Fortran IV Code for Thermal Transients in a UO_2 Fuel Rod," WCAP-7908, June 1972.

12. J. M. Geets, "MARVEL - A Digital Computer Code for Transient Analysis of a Multi-loop PWR System," WCAP-7909, June 1972.

13. Burnett, T. W. T., et al., "LOFTRAN Code Description," WCAP-7907-P-A (Proprietary), WCAP-7907-A (Non-Proprietary), April 1984.

14. R. F. Barry, "LEOPARD, a Spectrum Dependent Non-Spatial Depletion Code for the IBM-7094," WCAP-3269-26, September 1963.

15. R. F. Barry and S. Altomare, "The TURTLE 24.0 Diffusion Depletion Code": WCAP-7213, June 1968, (Westinghouse NES Proprietary); WCAP-7758, September 1971.

16. D. H. Risher, Jr., R. F. Barry, "TWINKLE - A Multi- Dimensional Neutron Kinetics Computer Code," WCAP - 7979-P-A (Proprietary), WCAP 8028-A (Non-Proprietary), January 1975.

17. C. R. Tuley, "Westinghouse Setpoint Methodology for Protection Systems, Sequoyah Units 1 and 2 Eagle 21 Version," WCAP-11239.

18. Catullo, W. J., Jr., et. al., "Modification of the Steam Generator Low-Low Level Trip Setpoint to Reduce Feedwater Related Trips," WCAP-11342-P-A, Rev. 1, April 1988.

19. Miranda, S., et. al., "Steam Generator Low Water Level Protection System Modifications to Reduce Feedwater-Related Trips," WCAP-11325-P-A, Rev. 1, February 1988.

19a. ORIGIN-S Computer Analysis (TVA RIMS# B38 940923 800).

20. BAW-10164-A, Rev. 3, "RELAP5/MOD2-B&W, An Advanced Computer Program for LOCA and Non-LOCA Transient Analysis," October 1992.

21. EMF-2100(P) Revision 16, “S-RELAP5 Models and Correlations Code Manual,” December 2011.

22. ANF-90-145(P)(A) Revision 0, “RODEX3 Fuel Rod Thermal - Mechanical Response Evaluation Model,” Siemens Power Corporation, April 1996.

23. BAW-10156-A, Rev. 1, "LYNXT-Core Transient Thermal Hydraulic Program," August 1993.

24. BAW-10162-A, "TACO3 - Fuel Pin Thermal Analysis Code," October 1989.

25. BAW-10180-A, Rev. 1, "NEMO -- Nodal Expansion Method Optimized," March 1993.

26. BAW-2395, “Sequoyah Nuclear Plant Power Level Uprate Report,” September 2001.

27. W. H. Moomau, ‘Westinghouse Power Measurement Instrument Uncertainty Methology, Sequoyah Units 1 and 2 (1.3% Uprate to 3467 MWt - NSSS Power),” WCAP-15669, July 2001.

28. Document No. 77-5016198, “Framatome ANP, Replacement Steam Generator Report for Sequoyah Unit 1.”

29. Document No.77-9142036, AREVA NP, “Replacement Steam Generator Report for Tennessee Valley Authority (TVA) Sequoyah Unit 2.”

30. Document No. B38040507802, “Sequoyah Nuclear Plants Unit 1 and 2 - Engineering and Analysis Support Services - Contract 998NNQ-256540-Letter TVFTI-130.”

TABLE 15.1.2-1

NUCLEAR STEAM SUPPLY SYSTEM POWER RATINGS

Guaranteed Core Thermal Power	3455 MWt**
Thermal power generated by the reactor coolant pumps	12 MWt
Guaranteed Nuclear Steam Supply System thermal power output (Core Thermal Power + thermal power guaranteed from RCPs)	3467 MWt**
The Engineered Safety Features design rating (maximum calculated turbine rating)*	3577 MWt

* See Westinghouse Letter TVA-97-078 (dated July 24, 1997) for explanation of NSSS power ratings in FSAR Chapter 15.

** See Section 15.0 for a discussion of the 1.3% power level upgrade. Rated thermal power was increased from 3411 MWt to 3455 MWt.

TABLE 15.1.2-2 (Sheet 1)

SUMMARY OF INITIAL CONDITIONS AND COMPUTER CODES

FAULTS	COMPUTER CODES UTILIZED	REACTIVITY COEFFICIENTS ASSUMED: MODERATOR[1] TEMPERATURE (Δk/°F)	MODERATOR[1] DENSITY (Δk/gm/cc)	DOPPLER [2]	INITIAL CORE THERMAL POWER ASSUMED (MWT)
CONDITION II					
Uncontrolled RCC Assembly Bank Withdrawal from a Subcritical Condition	RELAP5/MOD2 - B&W LYNXT	Opcm/°F	--	Lower	0
Uncontrolled RCC Assembly Bank With-drawal at Power	RELAP5/MOD2 - B&W LYNXT	See Section 15.2.2.2		Lower and upper	3479
RCC Assembly Misalignment	THINC, TURTLE LOFTRAN	-	0	Upper	3411[3]
Uncontrolled Boron Dilution	NA	NA	NA	NA	NA
Partial Loss of Forced Reactor Coolant Flow	LOFTRAN, LYNXT	-	0	Upper	3479
Start-up of an Inactive Reactor Coolant Pump	LOFTRAN, FACTRAN,THINC	-	0.43	Lower	2456
Loss of External Electrical Load and/or Turbine Trip	RELAP5/MOD-2 - B&W, LYNXT	+7.0 pcm/°F		Lower	3479 and 1774
Loss of Normal Feedwater	RELAP5/MOD-2 - B&W	-	NA	NA	3479
Loss of Off-Site Power to the Plant Auxiliaries (Plant Blackout)	RELAP5/MOD-2 - B&W	-	NA	NA	3479
Excessive Heat Removal Due to Feedwater System Malfunctions	RELAP5/MOD-2 - B&W LYNXT	-45pcm/°F	---	Lower	0 and 3479

TABLE 15.1.2-2 (Sheet 2)

SUMMARY OF INITIAL CONDITIONS AND COMPUTER CODES

FAULTS	COMPUTER CODES UTILIZED	REACTIVITY COEFFICIENTS ASSUMED MODERATOR[1] TEMPERATURE (Δk/°F)	MODERATOR[1] DENSITY (Δk/gm/cc)	DOPPLER [2]	INITIAL CORE THERMAL POWER ASSUMED (MWT)
Excessive Load Increase	RELAP5/MOD2-B&W, LYNXT	0 and -45 pcm/°F	-	Lower	3479
Accidental Depressurization of the Reactor Coolant System	LOFTRAN, LYNXT -	0	Upper		3479
Accidental Depressurization of the Main Steam System	LOFTRAN, LYNXT		- Function of Moderator Density See Subsection 15.2.13 (Figure 15.2.13-1)	-2.9 pcm/PF	0 (Subcritical)
Inadvertent Operation of ECCS During Power Operation	LOFTRAN, LYNXT	-	0	Lower	3494
CONDITION III					
Loss of Reactor Coolant from Small Ruptured Pipes or from Cracks in Large Pipe which Actuate Emergency Core Cooling	RELAP5/MOD2 - B&W				3479
Inadvertent Loading of a Fuel Assembly into an Improper Position	LEOPARD, TURTLE	-	NA	NA	3411[3]
Complete Loss of Forced Reactor Flow	RELAP5/MOD2 - B&W LYNXT	+7.0 pcm/°F	-	Lower	3479
Waste Gas Decay Tank Rupture	NA	-	NA	NA	3582
Single RCC Assembly Withdrawal at Full Power	TURTLE, THINC LEOPARD	-	NA	NA	3411[3]

TABLE 15.1.2-2 (Sheet 3)

SUMMARY OF INITIAL CONDITIONS AND COMPUTER CODES

FAULTS	COMPUTER CODES UTILIZED	REACTIVITY COEFFICIENTS ASSUMED MODERATOR[1] TEMPERATURE (Δk/°F)	MODERATOR[1] DENSITY (Δk/gm/cc)	DOPPLER [2]	INITIAL CORE THERMAL POWER ASSUMED (MWT)
CONDITION IV					
Major rupture of pipes containing reactor coolant up to and including double-ended rupture of the largest pipe in the Reactor Coolant System (Loss of Coolant Accident)	S-RELAP5 RODEX3A	Function of Moderator Density. See Subsection 15.4.1		Function of Fuel Temp. See Subsection 15.4.1	3479
Major secondary system pipe rup-ture up to and including double-ended rupture (Rupture of a Steam Pipe)	RELAP5/MOD2 - B&W LYNXT,NEMO	Function of Moderator Density See Subsection 15.4.2 (Figure 15.4.2-1)		-2.9 pcm/°F	0 (Critical)
Steam Generator Tube Rupture	NA	NA	NA	NA	3479
Single Reactor Coolant Pump Locked Rotor	RELAP5/MOD2 - B&W LYNXT	+7.0 pcm/°F		Lower	3479
Fuel Handling Accident	NA	NA		NA	NA
Rupture of a Control Rod Mechanism Housing (RCCA Ejection)	TWINKLE, FACTRAN	+5.2pcm/°F BOL -23pcm/°F EOL (Isothermal Temperature Coefficent)	----- See Table 15.4.6-1	Least negative Doppler defect.	0 and 3479

Notes:

(1) Only one is used in an analysis i.e. either moderator temperature or moderator density coefficient.
(2) Reference Figure 15.1.6-1
(3) These events, performed at a rated thermal power of 3411 MWt, have been evaluated in Reference 26. The evaluations demonstrate that the analysis of record for each of these events continue to be applicable to the uprated power of 3455 MWt.

TABLE 15.1.3-1 (Sheet 1)

TRIP POINTS AND TIME DELAYS TO TRIP ASSUMED IN ACCIDENT ANALYSES

Trip Function	Limiting Trip Point Assumed In Analyses	Time Delay (Seconds)
Power Range High Neutron Flux, High Setting	116.5%*	0.5
P-8 (Three-loop operation)	84%	0.5
Power Range High Neutron Flux, Low Setting	34.6%*	0.5
Overtemperature ΔT	Variable, see Figure 15.1.3-1	8.0**
Overpower ΔT	Variable, see Figure 15.1.3-1	8.0**
High pressurizer pressure	2445 psig	2.0
Low pressurizer pressure	1845 psig***	2.0
Low reactor coolant flow (from loop flow detectors)	87% loop flow	1.0
Undervoltage Trip (17x17)	68% nominal	1.2
Turbine Trip	Not applicable	1.0

* These values were adjusted for the 1.3% power level upgrade to coincide, in terms of megawatts, with the setpoints for the original rated thermal power level.

** Total time delay including RTD time response and trip circuit channel electronics delay from the time the temperature difference in the coolant loops exceeds the trip setpoint until the rods are free to fall.

***Except Subsection 15.2.14, Spurious Operation of the Safety Injection System at Power, which uses 1760 psig.

TABLE 15.1.3-1 (Sheet 2)
(Continued)

TRIP POINTS AND TIME DELAYS TO TRIP ASSUMED IN ACCIDENT ANALYSES

Trip Function	Limiting Trip Point Assumed In Analyses	Time Delay (Seconds)
Low-Low steam generator level	0% of narrow range level span	2.0 + TTD****
High steam generator level trip of the feedwater pumps and closure of feedwater system valves, and turbine trip	93% of narrow range level span	2.0

**** The Trip Time Delay (TTD) is applicable only below 50% RTP.

TABLE 15.1.7-1

CORE AND GAP ACTIVITIES
BASED ON FULL POWER OPERATION FOR 1000 DAYS
FULL POWER: 3582 MWt

Isotope	Curies in Core ($x 10^7$)*	Percent of Core Activity in Gap	Curies in Gap ($x 10^5$)
I-131	9.449	0.822	7.767
I-132	13.851	0.0901	1.248
I-133	19.500	0.271	5.284
I-134	21.708	0.0557	1.209
I-135	18.616	0.154	2.866
Xe-131m	0.104	1.0	0.104
Xe-133	19.145	0.667	12.770
Xe-133m	0.615	0.437	0.269
Xe-135	6.426	0.180	1.156
Xe-135m	4.053	0.0303	0.122
Xe-138	16.675	0.0316	0.526
Kr-83m	1.150	0.0824	0.094
Kr-85	0.103	16.7	1.724
Kr-85m	2.393	0.124	0.296
Kr-87	4.805	0.0668	0.321
Kr-88	6.658	0.0988	0.657
Kr-89	8.279	0.0137	0.113

* These activities are derived from TVA Calculation SQN-APS3-067 (Ref. 16., section 15.5.8) based on 193 nuclear fuel assemblies.

TABLE 15.1.7-2

CORE TEMPERATURE DISTRIBUTION

Percent of Core Fuel Within Given Temperature Range	Power, MWt	Fuel Temperature Range, °F
0.0	.1961	>3400
0.1	3.1373	3400 - 3200
0.3	10.3922	3200 - 3000
0.7	25.1	3000 - 2800
1.6	58.333	2800 - 2600
2.9	104.61	2600 - 2400
4.3	152.55	2400 - 2200
5.9	211.275	2200 - 2000
84.1	2999.02	<2000

Figure 15.1.3-1

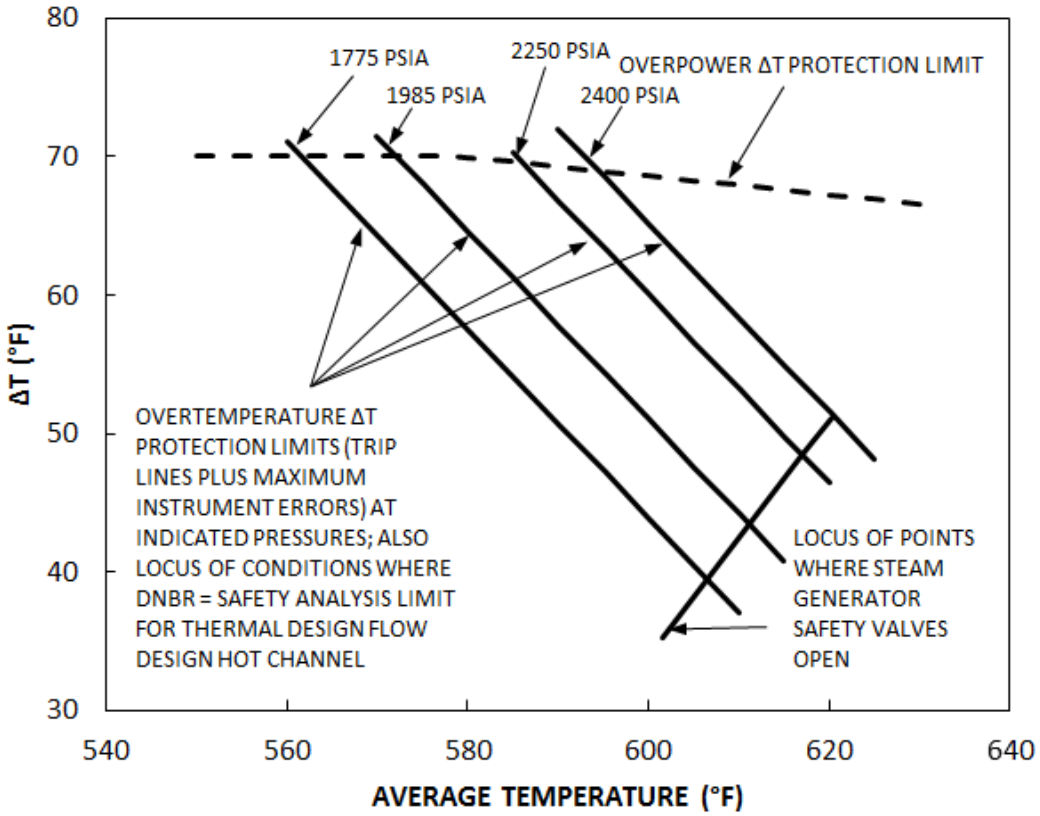

Illustration of Overtemperature and Overpower ΔT Protection

SQN-24

Figure 15.1.3-2a

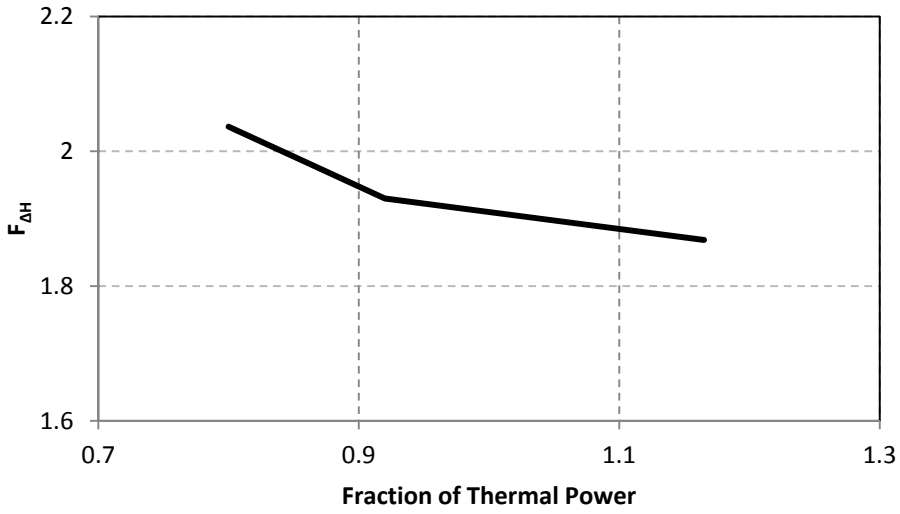

Illustration of Variable Design Peak - Mk-BW Fuel

SQN-26

Figure 15.1.3-2b

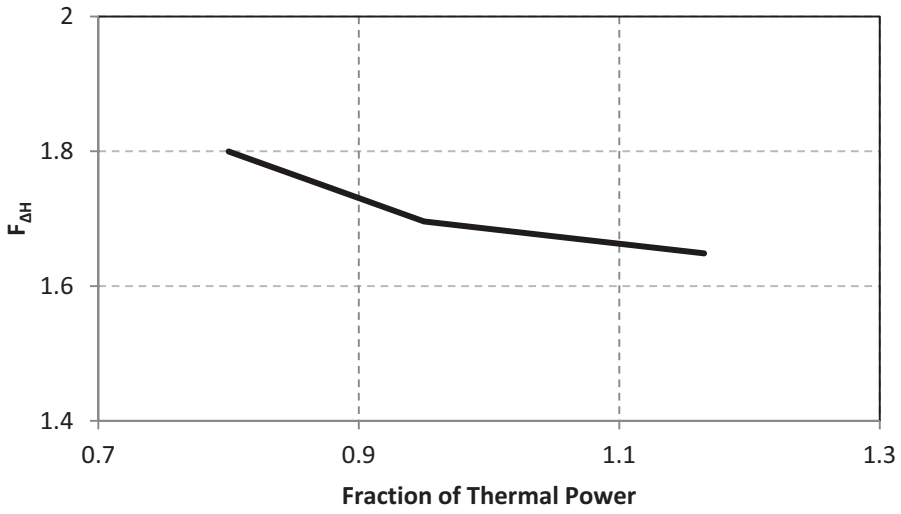

Illustration of Variable Design Peak - Advanced W17 HTP Fuel (Transition Cores)

Figure 15.1.3-2c

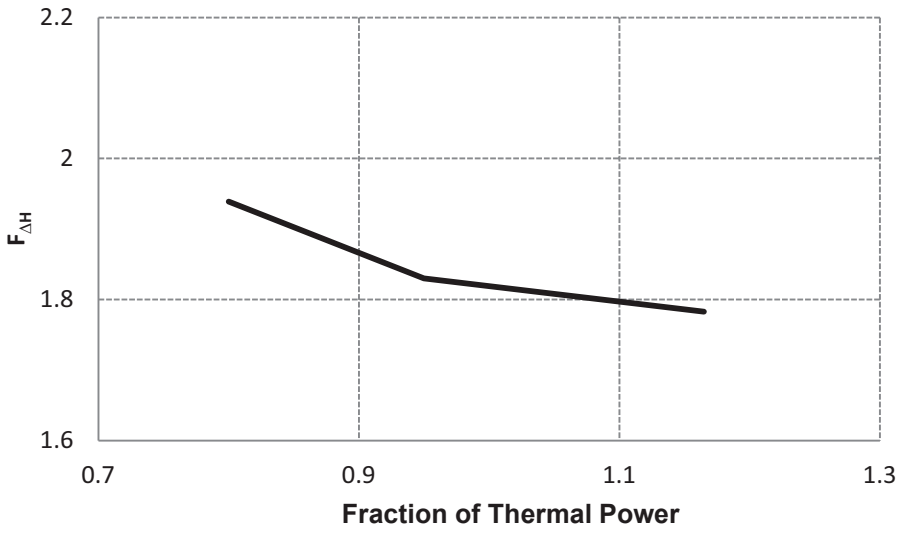

Illustration of Variable Design Peak – Advanced W17 HTP Fuel (Full Core)

Figure 15.1.5–1

RCCA POSITION vs. TIME ON REACTOR TRIP

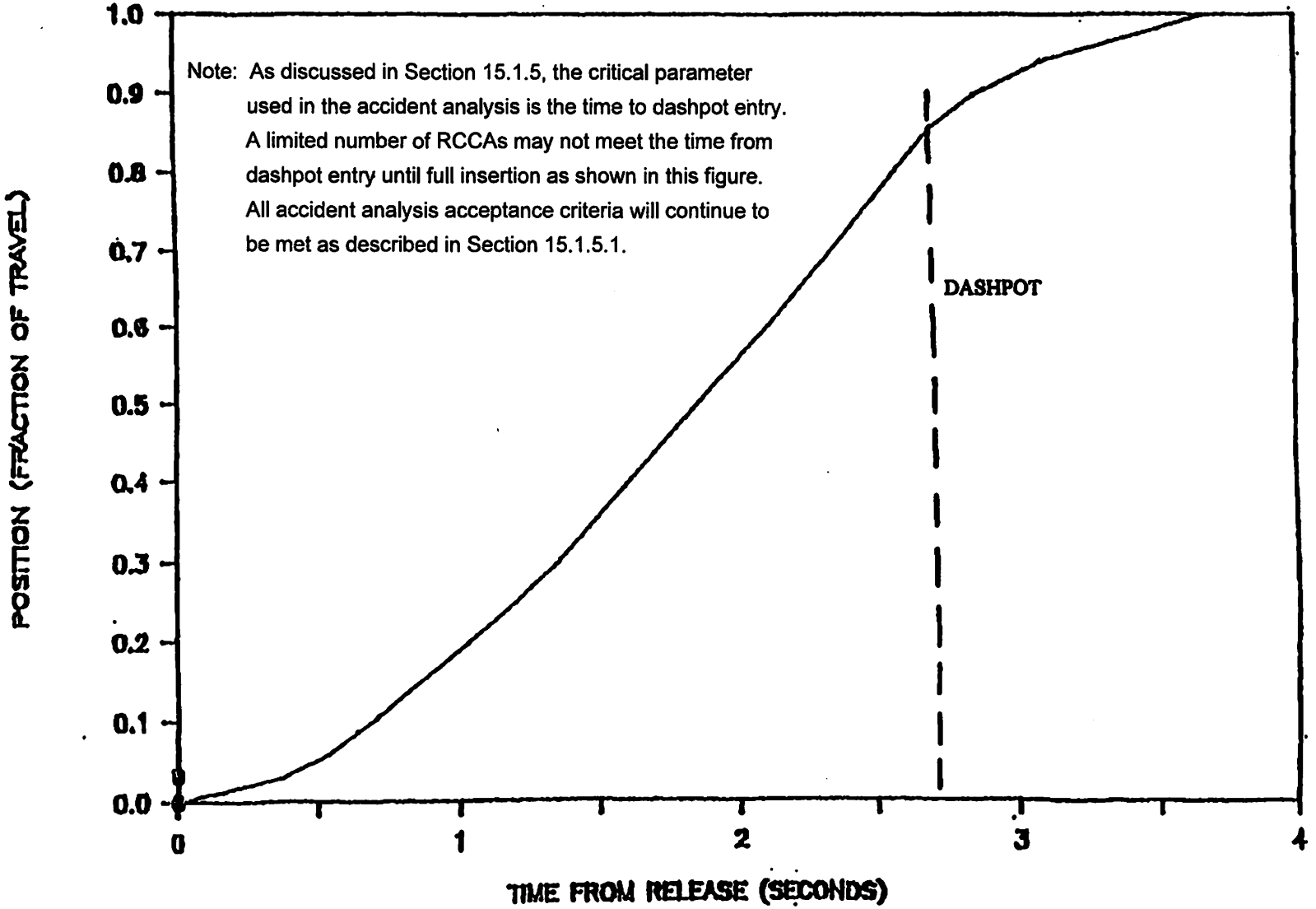

Revised by Amendment 24

Figure 15.1.5-2

Norm. RCCA Reactivity Worth vs Position

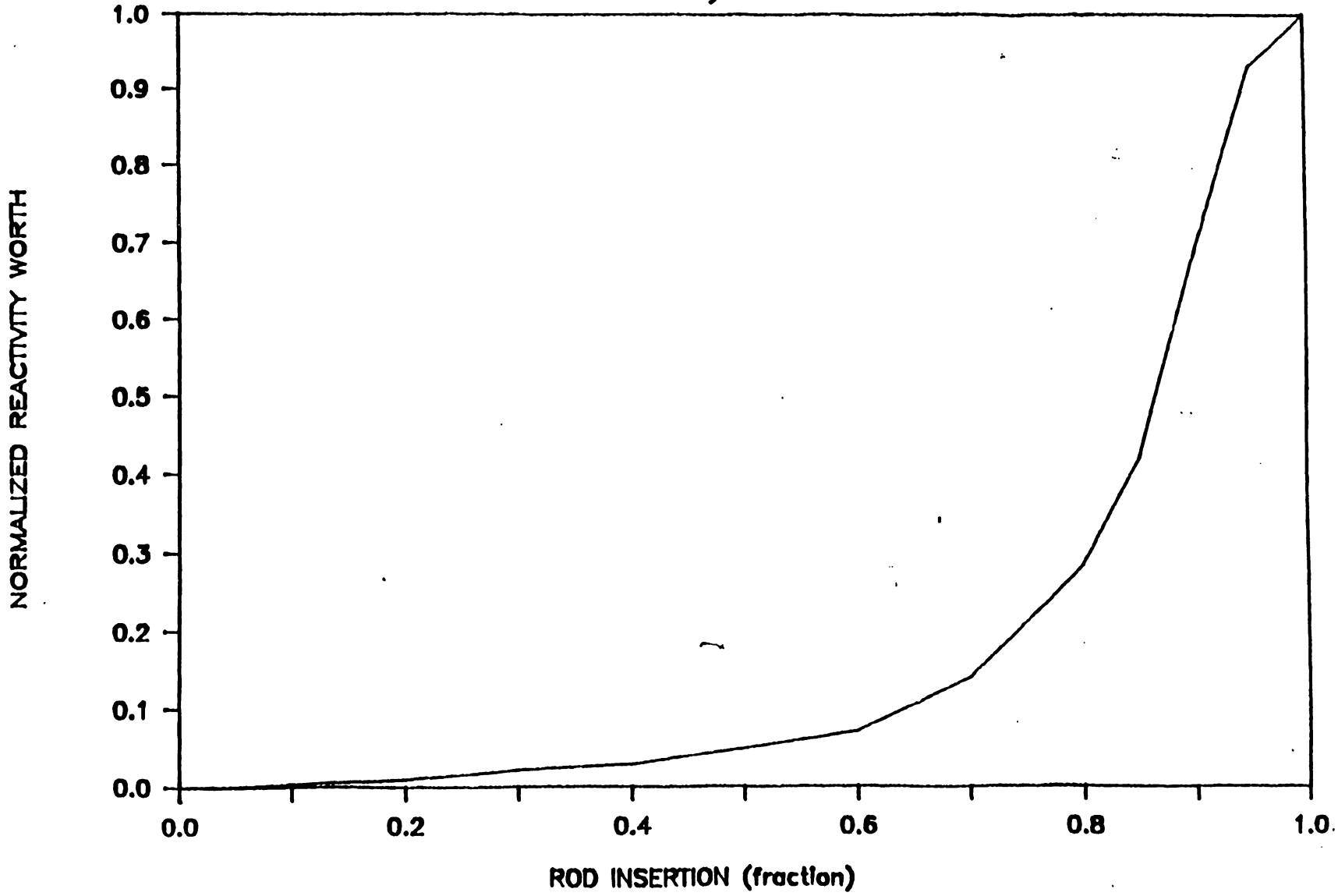

Figure 15.1.5–3

RCCA Bank Reactivity Worth vs Time

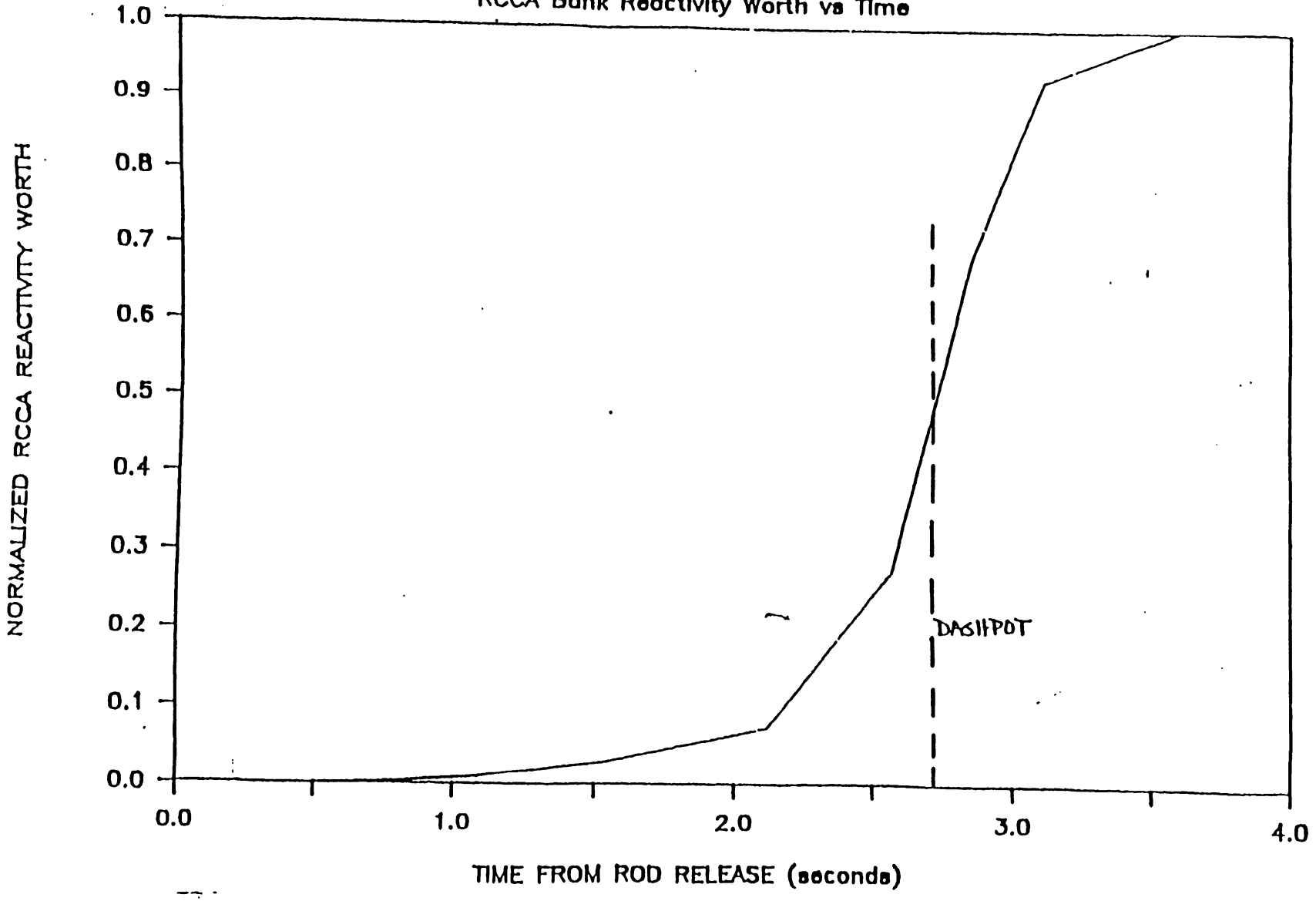

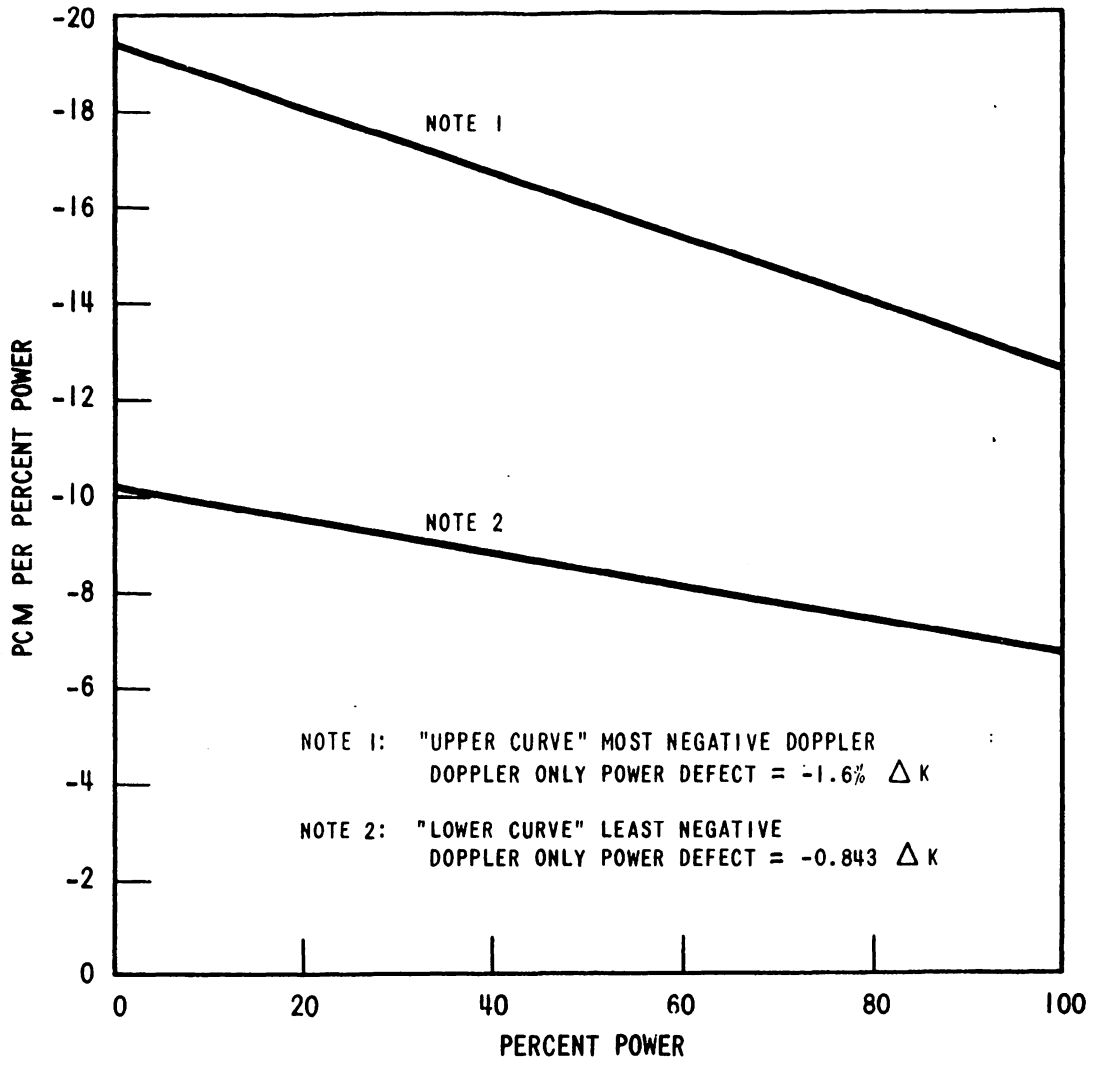

Figure 15.1.6-1 **Doppler Power Coefficient Used in Accident Analysis** 1

Revised by Amendment 1

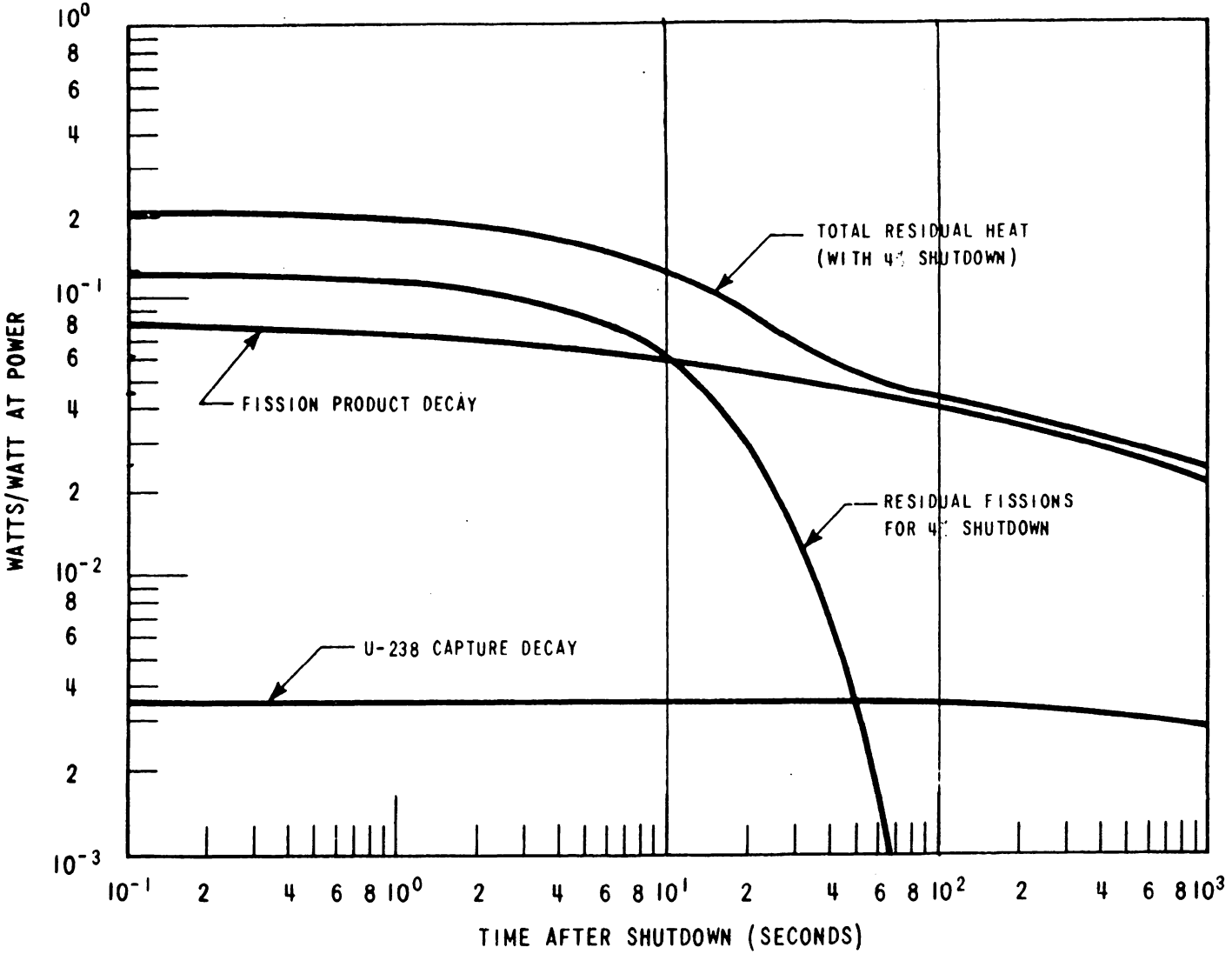

Figure 15.1.8-1 Residual Decay Heat

Revised by Amendment 1

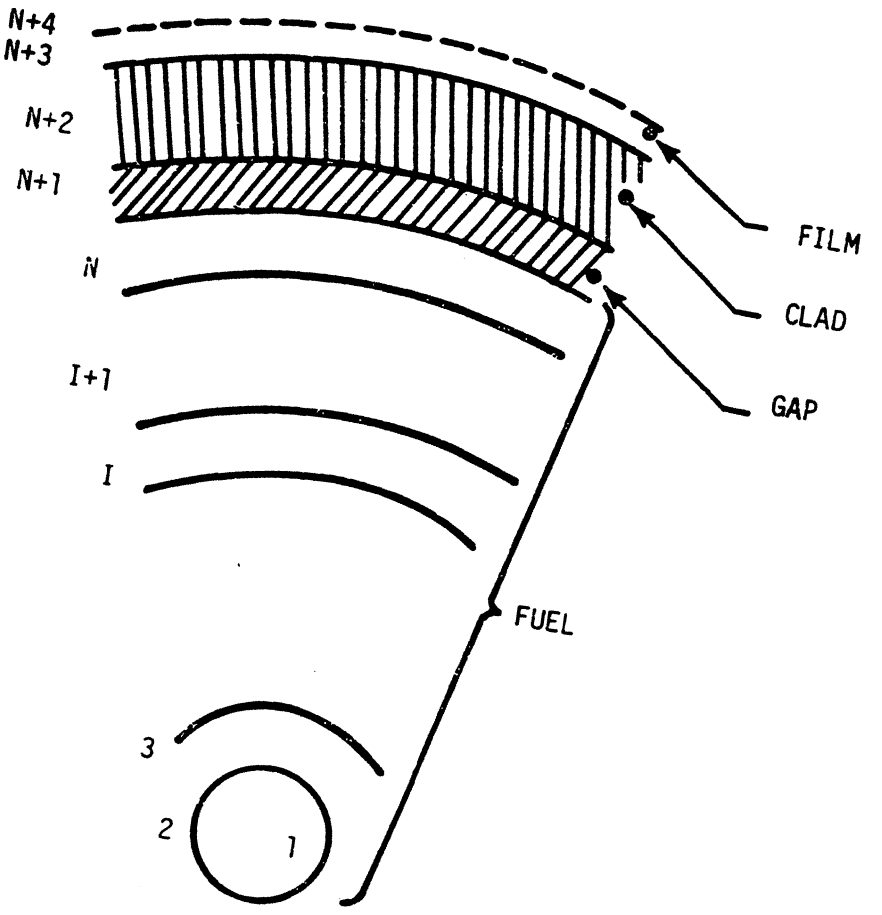

Figure 15.1.9-1 Fuel Rod Cross Section

15.2 CONDITION II - FAULTS OF MODERATE FREQUENCY

These faults at worst result in the reactor shutdown with the plant being capable of returning to operation. By definition, these faults (or events) do not propagate to cause a more serious fault, i.e., Condition III or IV category. In addition, Condition II events are not expected to result in fuel rod failures or Reactor Coolant System overpressurization.

For the purposes of this report the following faults have been grouped into this category:

1. Uncontrolled rod cluster control assembly bank withdrawal from a subcritical condition.
2. Uncontrolled rod cluster control assembly bank withdrawal at power.
3. Rod cluster control assembly misalignment.
4. Uncontrolled boron dilution.
5. Partial loss of forced reactor coolant flow.
6. Start-up of an inactive reactor coolant loop.
7. Loss of external electrical load and/or turbine trip.
8. Loss of normal feedwater.
9. Loss of offsite power to the station auxiliaries.
10. Excessive heat removal due to feedwater system malfunctions.
11. Excessive load increase.
12. Accidental depressurization of the Reactor Coolant System.
13. Accidental depressurization of the Main Steam System.
14. Spurious Operation of Safety Injection System at power.

An evaluation of the reliability of the Reactor Protection System actuation following initiation of Condition II events has been completed and is presented in Reference 1 for the relay protection logic. Standard reliability engineering techniques were used to assess likelihood of the trip failure due to random component failures. Common-mode failures were also qualitatively investigated. It was concluded from the evaluation that the likelihood of no trip following initiation of Condition II events is extremely small (2×10^{-7} derived for random component failures).

The solid state protection system design has been evaluated by the same methods as used for the relay system and the same order of magnitude of reliability is provided.

Hence, because of the high reliability of the protection system no special provision is proposed to be taken in the design to cope with the consequences of Condition II events without trip.

15.2.1 Uncontrolled Rod Cluster Control Assembly Bank Withdrawal From A Subcritical Condition

15.2.1.1 Identification of Causes and Accident Description

A rod cluster control assembly withdrawal accident is defined as an uncontrolled addition of reactivity to the reactor core caused by withdrawal of rod cluster control assemblies resulting in a power excursion. Such a transient could be caused by a malfunction of the reactor control or control rod drive systems. This could occur with the reactor either subcritical, at hot zero power or at power. The "at power" case is discussed in Subsection 15.2.2.

Although the reactor is normally brought to power from a subcritical condition by means of rod cluster control assembly withdrawal, initial startup procedures with a clean core call for boron dilution. The maximum rate of reactivity increase in the case of boron dilution is less than that assumed in this analysis (Subsection 15.2.4, Uncontrolled Boron Dilution).

The rod cluster control assembly drive mechanisms are wired into preselected bank configurations which are not altered during reactor life. These circuits prevent the assemblies from being withdrawn in other than their respective banks. Power supplied to the banks is controlled such that no more than two banks can be withdrawn at the same time. The rod cluster control assembly drive mechanisms are of the magnetic latch type and coil actuation is sequenced to provide variable speed travel. The maximum reactivity insertion rate analyzed in the detailed plant analysis is that occurring with the simultaneous withdrawal of the combination of the two control banks having the maximum combined worth at maximum speed.

The neutron flux response to a continuous reactivity insertion is characterized by a very fast rise terminated by the reactivity feedback effect of the negative Doppler coefficient. This self limitation of the power burst is of primary importance since it limits the power to a tolerable level during the delay time for protection action. Should a continuous rod cluster control assembly withdrawal accident occur the transient will be terminated by the following automatic features of the Reactor Protection System:

1. Source Range High Neutron Flux Reactor Trip - actuated when either of two independent source range channels indicates a neutron flux level above a preselected manually adjustable setpoint. This trip function may be manually bypassed when either intermediate range flux channel indicates a flux level above a specified level. It is automatically reinstated when both intermediate range channels indicate a flux level below a specified level.

2. Intermediate Range High Neutron Flux Reactor Trip - actuated when either of two independent intermediate range channels indicates a flux level above a preselected manually adjustable setpoint. This trip function may be manually bypassed when two of the four power range channels are reading above approximately 10% of full power and is automatically reinstated when three of the four channels indicate a power below this value.

3. Power Range High Neutron Flux Reactor Trip (Low Setting) - actuated when two out of the four power range channels indicate a power level above approximately 25% of full power. This trip function may be manually bypassed when two of the four power range channels indicate a power level above approximately 10% of full power and is automatically reinstated when three of the four channels indicate a power level below this value.

4. Power Range High Neutron Flux Reactor Trip (High Setting) - actuated when two out of the four power range channels indicate a power level above a preset setpoint. This trip function is always active.

5. Power Range High Positive Neutron Flux Rate Trip - actuated when the positive rate of change of neutron flux on two out of four nuclear power range channels indicate a rate above the preset setpoint. This trip function is always active.

In addition, control rod stops on high intermediate range flux level (one of two) and high power range flux level (one out of four) serve to discontinue rod withdrawal and prevent the need to actuate the intermediate range flux level trip and the power range flux level trip, respectively.

15.2.1.2 Analysis of Effects and Consequences

The analysis of the uncontrolled RCCA bank withdrawal from subcritical accident is performed in two stages. First a systems analysis is performed which includes the prediction of core power response. In the second stage, forcing functions generated in the systems analysis are subsequently used in sub-channel thermal-hydraulics analyses to determine minimum DNBR for the event.

System and core nuclear response is performed using the RELAP5/MOD2- B&W computer code (Reference 12). The RELAP5/MOD2-B&W code simulates the neutron kinetics, reactor coolant system and steam system thermal-hydraulics. The power response for the uncontrolled RCCA bank withdrawal from subcritical event is generated with the RELAP5/MOD2-B&W point kinetics model utilizing conservatively bounding reactivity feedback inputs.

System flow, pressure, core inlet temperature, and core kinetics responses resulting from the system analysis are transferred to the LYNXT computer code (Reference 13). LYNXT is used to generate core sub-channel fluid response, hot-pin heat flux, and location-specific DNBR. LYNXT studies determine a radial peaking limit that, in conjunction with the core power response, yields an acceptable margin to DNB for the RCCA bank withdrawal from subcritical event. Adherence to the peaking limit is assured by the use of three-dimensional neutronics computer simulation - NEMO (Reference 16) as part of each fuel cycle design.

In order to give conservative results for a startup accident, the following assumptions are made concerning the initial reactor conditions:

1. Since the magnitude of the power peak reached during the initial part of the transient for any given rate of reactivity insertion is strongly dependent on the Doppler coefficient, conservatively low values are used. The least negative, or lower, Doppler curve of Figure 15.1.6-1 is utilized in this analysis.

2. Contribution of the moderator reactivity coefficient is negligible during the initial part of the transient because the heat transfer time between the fuel and the moderator is much longer than the neutron flux response time. After the initial neutron flux peak, the succeeding rate of power increase can be affected by the moderator reactivity coefficient. Since the moderator reactivity coefficient must be negative at all times in plant life any reactivity feedback to a core heatup would be negative, a mitigative response. A conservative value of 0 pcm/^{o}F is therefore utilized in this analysis.

3. The reactor is assumed to be initially critical at hot zero power. This assumption is more conservative than that of a lower initial system temperature. The higher system temperature yields a larger fuel-water heat transfer coefficient, larger specific heats, and a less negative (smaller absolute magnitude) Doppler coefficient all of which tend to reduce the Doppler feedback effect thereby increasing the neutron flux peak.

4. Reactor trip is assumed to be initiated by power range high neutron flux (low setting). The most adverse combination of instrument and setpoint errors, as well as delays for trip signal actuation and rod cluster control assembly release, is taken into account. A 10 percent increase is assumed for the power range flux trip setpoint raising it from the nominal value of 25 percent to 35 percent. Since the rise in the neutron flux is so rapid, the effect of errors in the trip setpoint on the actual time at which the rods are released is negligible. In addition, the reactor trip insertion characteristic is based on the assumption that the highest worth rod cluster control assembly is stuck in its fully withdrawn position. See Subsection 15.1.5 for rod cluster control assembly insertion characteristics.

5. The maximum positive reactivity insertion rate assumed (57 pcm/s) is greater than that for the simultaneous withdrawal of the combination of the two control banks having the greatest combined worth at maximum speed (45 inches/min). Control rod drive mechanism design is discussed in Subsection 4.2.3.

6. The initial power level was assumed to be below the power level expected for any shutdown condition. The combination of highest reactivity insertion rate and lowest initial power produces the highest peak heat flux.

7. Two reactor coolant pumps are assumed to be operational.

Results

Use of a BOL delayed neutron fraction effectively slows the neutron flux response, allowing closer coupling to the increase in lagging core thermal power. Use of BOL parameters, therefore, result in the most limiting RCCA withdrawal from subcritical event response. Figures 15.2.1-1 through 15.2.1-3 show the transient behavior for this event.

Figure 15.2.1-1 is a graph of the nuclear power transient predicted in the systems analysis with RELAP5/MOD2-B&W. Nuclear power is normalized to the rated thermal power of 3455 MWth. The nuclear power overshoots the rated thermal power for a very short time period. As a result, the fuel thermal response is limited.

Core thermal power predicted in the systems analysis with RELAP5/MOD2-B&W is normalized to rated thermal power and plotted in Figure 15.2.1-2. The benefit of the fuel thermal lag behind the nuclear power response is demonstrated in this plot. Thermal power peaks significantly below rated thermal power.

An adequate margin to DNB is indicated by the results of the LYNXT DNB study. In addition, the study demonstrates that the hot-pin fuel temperature response is acceptable and that the peak centerline temperature is significantly less than the fuel melt temperature. A plot of the peak fuel and cladding temperature response is shown in Figure 15.2.1-3.

The time sequence of events for the RCCA withdrawal from subcritical event is shown in Table 15.2-1.

15.2.1.3 Conclusions

The system analysis for the RCCA withdrawal accident from subcritical event demonstrates that the systems responses are well within relevant material and component limits. The corresponding core sub-channel thermal-hydraulics analysis results in a minimum DNBR above the safety limit. In addition, fuel thermal responses are well within material limits. All acceptance criteria are, therefore, met for this event.

The RCCA Withdrawal from Subcritical event has been evaluated with respect to the CENP-Westinghouse steam generator replacement at Sequoyah Unit 1 and Unit 2. The evaluation concludes that the parameters important to the consequences of this event are not adversely affected by the RSG.

15.2.2 Uncontrolled Rod Cluster Control Assembly Bank Withdrawal At Power

15.2.2.1 Identification of Causes and Accident Description

Uncontrolled rod cluster control assembly bank withdrawal at power results in an increase in the core heat flux. Since the heat extraction from the steam generator lags behind the core power generation until the steam generator pressure reaches the relief or safety valve setpoint, there is a net increase in the reactor coolant temperature. Unless terminated by manual or automatic action, the power mismatch and resultant coolant temperature rise would eventually result in DNB. Therefore, in order to avert damage to the cladding the Reactor Protection System is designed to terminate any such transient before the DNBR falls below the safety limit.

The automatic features of the Reactor Protection System which prevent core damage following the postulated accident include the following:

1. Power range neutron flux instrumentation actuates a reactor trip if two out of four channels exceed an overpower setpoint.

2. Reactor trip is actuated if any two out of four ΔT channels exceed an overtemperature ΔT setpoint. This setpoint is automatically varied with axial power imbalance, coolant temperature and pressure to protect against DNB.

3. Reactor trip is actuated if any two out of four ΔT channels exceed an overpower ΔT setpoint. This setpoint is automatically varied with axial power imbalance to ensure that the allowable heat generation rate (kW/ft) is not exceeded.

4. A high pressurizer pressure reactor trip actuated from any two out of four pressure channels which is set at a fixed point. This set pressure is less than the set pressure for the pressurizer safety valves.

5. A high pressurizer water level reactor trip actuated from any two out of three level channels which is set at a fixed point.

In addition to the above listed reactor trips, there are the following rod cluster control assembly withdrawal blocks:

1. High neutron flux (one out of four)

2. Overpower ΔT (two out of four)

3. Overtemperature ΔT (two out of four)

The manner in which the combination of overpower and overtemperature ΔT trips provide protection over the full range of Reactor Coolant System conditions is described in Chapter 7. This includes a

plot (also shown as Figure 15.1.3-1) representing typical allowable reactor coolant loop average temperature and ΔT for the design power distribution and flow as a function of primary coolant pressure. The boundaries of operation defined by the overpower ΔT trip and the overtemperature ΔT trip are represented as "protection lines" on this diagram. The protection lines are drawn to include all adverse instrumentation and setpoint errors so that under nominal conditions trip would occur well within the area bounded by these lines. The utility of this diagram is in the fact that the limit imposed by any given DNBR can be represented as a line. The DNB lines represent the locus of conditions for which the DNBR equals the safety limit. All points below and to the left of DNB line for a given pressure have a DNBR greater than the safety limit. The diagram shows that DNB is prevented for all cases if the area enclosed within the maximum protection lines is not traversed by the applicable DNBR line at any point. This diagram is valid also for Cycle 9 reload fuel supplied by the B&W Fuel Company.

The area where DNBR is greater than the safety limit, and power less than the overpower limit (power, pressure and temperature) is bounded by the combination of reactor trips: high neutron flux (fixed setpoint); high pressure (fixed setpoint); low pressure (fixed setpoint); overpower and overtemperature ΔT (variable setpoints).

Power distribution analyses of rod withdrawal accidents from reduced power conditions are described in WCAP-8403 (Reference 10). Radial peaking factors under various rodded conditions used in the accidents are shown in Table 3-1 from Reference 10. The axial power shapes preceding and during the withdrawal accidents are not included here explicitly because of the very large number involved. However, the results from the axial calculations are synthesized with the radial peaking factors using the techniques described in Section 4.3, and then plotted in the form of a "flyspeck." The results indicate that the control bank malfunction flyspeck and the boration/dilution flyspeck reach a smaller maximum linear heat generation rate than the limiting value of 21 kW/ft. Considerable margin is available for conservatism.

15.2.2.2 Analysis of Effects and Consequences

Method of Analysis

This transient is analyzed using the RELAP5/MOD2-B&W code (Reference 12). The RELAP5/MOD2-B&W code is a thermal-hydraulic code that simulates the neutron kinetics, Reactor Coolant System, pressurizer, pressurizer relief and safety valves, steam generators and steam generator safety valves. The code calculates the system parameters by performing a semi-implicit solution of conservation of mass, energy and momentum over two fluids (liquid and vapor). The system and core power responses generated by RELAP5/MOD2-B&W are used to determine the hot channel DNBR by applying the statistical core design methodology (Reference 14) with the LYNXT computer code (Reference 13).

In order to obtain conservative values of DNBR the following assumptions are made:

1. Initial conditions of maximum core power (including instrumentation errors) and use of statistical core design methodology that accounts for measurement and control band uncertainties on all critical parameters.

2. Reactivity Coefficients - Two cases are analyzed:

    a. Minimum Reactivity Feedback. The most positive moderator coefficient is assumed, corresponding to the beginning of core life. The least negative Doppler power coefficient is assumed, consistent with the beginning of core life.

b. Maximum Reactivity Feedback. The largest negative moderator coefficient allowed by the Technical Specifications of the plant is assumed. The largest negative Doppler power coefficient is assumed, consistent with the end of core life.

3. The reactor trip on high neutron flux is assumed to be actuated at a conservative value of 118% of nominal full power. The ΔT trips include all adverse instrumentation and setpoint errors, while the delays for the trip signal actuation are assumed at their maximum values.

4. The rod cluster control assembly trip insertion characteristic is based on the assumption that the highest worth assembly is stuck in its fully withdrawn position.

5. The maximum positive reactivity insertion rate is greater than that for the simultaneous withdrawal of the combination of the two control banks having the maximum combined worth at maximum speed.

Results

Figures 15.2.2-1 through 15.2.2-3 show the transient response to a rapid rod cluster control assembly withdrawal incident starting from full power. Reactor trip on high neutron flux occurs shortly after start of the accident. Since this is rapid with respect to the thermal time constants of the plant, small changes in T_{avg} and pressure result and a large margin to DNB is maintained.

The transient response for a slow control rod assembly withdrawal from full power is shown in Figures 15.2.2-4 through 15.2.2-6. Reactor trip on overtemperature ΔT occurs after a longer period and the rise in temperature and pressure is consequently larger than for rapid rod cluster control assembly withdrawal.

Figure 15.2.2-7 shows the minimum DNBR as a function of reactivity insertion rate from initial full power operation for the minimum and maximum reactivity feedback. It can be seen that two reactor trip channels provide protection over the whole range of reactivity insertion rates. These are the high neutron flux and the overtemperature ΔT channels. The minimum DNBR is never less than the safety limit. The minimum DNBR values shown in Figure 15.2.2-7 are from LYNXT calculations.

A typical sequence of events for both a large and a small reactivity insertion rate may be found in Table 15.2-1.

15.2.2.3 Conclusion

The high neutron flux and overtemperature ΔT trip channels provide adequate protection over the entire range of possible reactivity insertion rates, i.e., the minimum value of DNBR is always larger than the safety analysis limit.

The RCCA Withdrawal at Power has been evaluated with respect to the CENP-Westinghouse steam generator replacement at Sequoyah Unit 1 and Unit 2. The evaluation concludes that the parameters important to the consequences of this event are not adversely affected by the RSG.

15.2.3 Rod Cluster Control Assembly Misalignment

15.2.3.1 Identification of Causes and Accident Description

Rod cluster control assembly misalignment accidents include:

1. A dropped full-length assembly;

2. A dropped full-length assembly bank;

3. Statically misaligned full length assembly.

Each rod cluster control assembly has a position indicator channel which displays position of the assembly. The displays of assembly positions are grouped for the operator's convenience. Fully inserted assemblies are further indicated by a rod bottom light. Group demand position is also indicated.

RCCAs are always moved in preselected banks, and the banks are always moved in the same preselected sequence. Each bank of RCCAs is divided into two groups. The rods comprising a group operate in parallel through multiplexing thyristors. The two groups in a bank move sequentially such that the first group is always within one step of the second group in the bank.

A definite schedule of actuation (or deactuation of the stationary gripper, movable gripper, and lift coils of a mechanism) is required to withdraw the RCCA attached to the mechanism. Mechanical failures are in the direction of insertion or immobility.

A dropped assembly or assembly bank is detected by:

1. Sudden drop in the core power level as seen by the Nuclear Instrumentation System;

2. Asymmetric power distribution as seen on out of core neutron detectors or core exit thermocouples;

3. Rod bottom light(s);

4. Rod deviation alarm;

5. Rod position indication.

Misaligned assemblies are detected by:

1. Asymmetric power distribution as seen on out of core neutron detectors or core exit thermocouples;

2. Rod deviation alarm;

3. Rod position indicators.

The resolution of the rod position indicator channel is ± 5 percent of span (± 7.2 inches). Deviation of any assembly from its group by twice this distance (10 percent of span, or 14.4 inches) will not cause

power distributions worse than the design limits. The deviation alarm alerts the operator to rod deviation with respect to group demand position in excess of 5 percent of span.

If one or more rod position indicator channels should be out of service, detailed operating instructions shall be followed to assure the alignment of the non-indicated assemblies. The operator is also required to take action, as required by the Technical Specifications.

15.2.3.2 Analysis of Effects and Consequences

Method of Analysis

1. One or More Dropped RCCAs from the Same Group

   For evaluation of the dropped RCCA event, the transient system response is calculated using the LOFTRAN code (Reference 4). The LOFTRAN code is described in section 15.1.9.3.

   Statepoints are calculated and nuclear models are used to obtain a hot channel factor consistent with the primary system conditions and reactor power. By incorporating the primary conditions from the transient and the hot channel factor from the nuclear analysis, the DNBR design basis is shown to be met using the THINC code (See Section 4.4.3.4.1). The transient response, nuclear peaking factor analysis, and DNBR design basis confirmation are performed in accordance with the methodology described in Reference 5.

2. Statically Misaligned RCCA

   Steady state power distributions are analyzed using the computer codes as described in Table 4.1-2. The peaking factors are then used as input to the THINC code to calculate the DNBR.

Results

1. One or More Dropped RCCAs

   Single or multiple dropped RCCAs within the same group result in a negative reactivity insertion that may be detected by the power range negative neutron flux rate trip circuitry. If detected, the reactor is tripped within approximately 2.7 seconds following the drop of the RCCAs. The core is not adversely affected during this period since power is decreasing rapidly. Following reactor trip, normal shutdown procedures are followed. The operator may manually retrieve the RCCA by following approved operating procedures.

   For those dropped RCCAs that do not result in a reactor trip, power may be reestablished either by reactivity feedback or control bank withdrawal. Following a dropped rod event in manual rod control, the plant will establish a new equilibrium condition. The equilibrium process without control system interaction is monotonic, thus removing power overshoot as a concern and establishing the automatic rod control mode of operation as the limiting case.

   For a dropped RCCA event in the automatic rod control mode, the rod control system detects the drop in power and initiates control bank withdrawal. Power overshoot may occur due to this

action by the automatic rod controller after which the control system will insert the control bank to restore nominal power. Figures 15.2.3-1 and 15.2.3-2 show a typical transient response to a dropped RCCA (or RCCAs) in automatic control. In all cases, the minimum DNBR remains above the safety analysis limit value. In some cases of automatic bank withdrawal, reactor power can reach and be limited by the power range monitor (PRM) high flux, high setpoint reactor trip. Safety analyses that credit this function generally assume a trip setpoint of 116.5 percent RTP, as indicated in Table 15.1.3-1, and as described in subsections 15.1.3, 15.2.2.2, 4.3.2.2.6, 4.4.2.2.6 and 7.2.2.2.1, and as reflected in Figures 7.2.2-1 and 15.1.3-1. The nominal set point is 109 percent RTP, with a measurement uncertainty of +/-6 percent RTP as calculated under the approved methodology (see subsection 15.1.11, Reference 17). An unallocated margin of 1.5 percent RTP is present in the 116.5 percent RTP analytical limit. To improve DNBR margin in the dropped rod accident, this margin in measurement uncertainty will be applied in dropped rod analyses, allowing the peak power assumption in this accident to be reduced to 115 percent RTP. This lower value is fully supported by margin available in the measurement uncertainty allowance. Additional assurance that this value is conservative is seen in rod control system features that are not credited in modeling of the accident. For example, for the reactor to attain 115 percent RTP in the analyzed scenario it is necessary that a malfunction occur in the rod control system such that rod movement remains functional, but only in the outward direction, without responding to power mismatch feedback that otherwise would stop rod withdrawal and begin rod insertion before reactor power had exceeded RTP. It must also be assumed that the C-11 interlock fails, which otherwise would block automatic withdrawal of Bank D beyond 220 steps, and that the C-2 interlock fails, which stops rod withdrawal, if the C-2 setpoint is exceeded on any one of the four PRMs, before the PRM high flux reactor trip setpoint is reached. It is improbable that this combination of malfunctions would occur simultaneously and concurrently with the initiating failure.

2. Dropped RCCA Bank

A dropped RCCA bank typically results in a reactivity insertion of greater than 500 pcm which will be detected by the power range negative neutron flux rate trip circuitry. The reactor is tripped within approximately 2.7 seconds following the drop of a RCCA bank. The core is not adversely affected during this period since power is decreasing rapidly. Following the reactor trip, normal shutdown procedures are followed to further cool down the plant. Any action required of the operator to maintain the plant in a stabilized condition will be in a time frame in excess of 10 minutes following the incident.

3. Statically Misaligned RCCA

The most severe misalignment situations with respect to DNBR at significant power levels arise from cases in which one RCCA is fully inserted, or where Bank D is fully inserted with one RCCA fully withdrawn. Multiple independent alarms, including a bank insertion limit alarm, alert the operator well before the postulated conditions are approached. The bank can be inserted to its insertion limit with any one assembly fully withdrawn without the DNBR falling below the safety analysis limit value.

The insertion limits in the Technical Specifications may vary from time to time depending on a number of limiting criteria. The full power insertion limits on control Bank D must be chosen to be above that position (which meets minimum DNBR and peaking factors). The full power insertion limit is usually dictated by other criteria. Detailed results will vary from cycle to cycle depending on fuel arrangements.

For this RCCA misalignment, with Bank D inserted to its full power insertion limit and one RCCA fully withdrawn, DNBR does not fall below the safety analysis limit value. This case is analyzed assuming the initial reactor power, pressure, and RCS temperatures are at their nominal values but with the increased radial peaking factor associated with the misaligned RCCA.

For RCCA misalignments with one RCCA fully inserted, the DNBR does not fall below the limit value. This case is analyzed assuming the initial reactor power, pressure, and RCS temperatures are at their nominal values, but with the increased radial peaking factor associated with the misaligned RCCA.

DNBR does not occur from the RCCA misalignment incident and thus the ability of the primary coolant to remove heat from the fuel rod is not reduced. The peak fuel temperature corresponds to a linear heat generation rate based on the radial peaking factor penalty associated with the misaligned RCCA and the design axial power distribution. The resulting linear heat generation is well below that which would cause fuel melting.

Following the identification of an RCCA group misalignment condition by the operator, the operator is required to take action as required by the plant Technical Specifications and operating instructions.

15.2.3.3 Conclusions

For all cases of dropped RCCAs or dropped banks, for which the reactor is tripped by the power range negative neutron flux rate trip, there is no reduction in the margin to core thermal limits and, consequently, the DNB design basis is met. It is shown for all cases which do not result in reactor trip that the DNBR remains greater than the safety analysis limit value and, therefore, the DNB design basis is met.

For all cases of any RCCA inserted, or Bank D inserted to its rod insertion limits with any single RCCA in that bank fully withdrawn (static misalignment), the DNBR remains greater than the safety analysis limit value.

The RCCA Misalignment event has been evaluated with respect to the CENP-Westinghouse steam generator replacement at Sequoyah Unit 1 and Unit 2. The evaluation concludes that the parameters important to the consequences of this event are not adversely affected by the RSG.

15.2.4 Uncontrolled Boron Dilution

15.2.4.1 Identification of Causes and Accident Description

Reactivity can be added to the core by feeding primary grade water into the Reactor Coolant System via the reactor makeup portion of the Chemical and Volume Control System. Boron dilution is a manual operation under strict administrative controls with procedures calling for a limit on the rate and duration of dilution. A boric acid blend system is provided to permit the operator to match the boron concentration of reactor coolant makeup water during normal charging to that in the Reactor Coolant System (RCS). The Chemical and Volume Control System (CVCS) is designed to limit, even under various postulated failure modes, the potential rate of dilution to a value which, after indication through alarms and instrumentation, provides the operator sufficient time to correct the situation in a safe and orderly manner.

The opening of the primary water makeup control valve provides makeup to the RCS which can dilute the reactor coolant. Inadvertent dilution from this source can be readily terminated by closing the control valve or stopping the primary makeup water pump. Makeup water can be added to the RCS at pressure when at least one charging pump and a primary makeup water pump are running.

The rate of addition of unborated makeup water to the RCS when it is not at pressure is limited by the capacity of the primary water supply pumps. Normally, only one primary water supply pump is operating while the other is on standby. With the RCS at pressure, the maximum delivery rate is limited by the control valve.

The boric acid from the boric acid tank is blended with primary grade water in the blender and the composition is determined by the preset flow rates of boric acid and primary grade water on the control board.

In order to dilute, two separate operations are required:

1. The operator must switch from the automatic makeup mode to the dilute mode, and

2. The boric acid to blender flow control switch must be turned to the start position.

Omitting either step would prevent dilution. Information on the status of the reactor coolant makeup is continuously available to the operator by:

1. Status lights on the control board to indicate CVCS operating conditions.

2. CVCS deviations in flow from programmed levels at the boric acid and demineralized water blender.

3. Pressurizer level and pressure would be increasing from prescribed values (at higher than planned dilution flows).

4. Volume control tank level deviation from programmed level.

Thus there are a number of diverse indications available to the operator to indicate inadvertent or excessive dilutions.

15.2.4.2 Analysis of Effects and Consequences

Methods of Analysis

Boron dilution during refueling, startup, and power operation are considered in this analysis. Table 15.2-1 contains the time sequence of events for this accident.

Dilution During Refueling

An uncontrolled boron dilution accident is not credible during refueling. This accident is prevented by administrative controls which isolate the RCS from significant sources of unborated water.

Various valve combinations that are required to be verified closed during refueling operations are specified in Technical Specification 3.9.2, SR 3.9.2.1. These valves will block the significant dilution flow paths which could allow unborated makeup to reach the RCS. Dilution flow paths, such as instrument and sampling sense lines, where the physical size of the connection to the RCS allows sufficient time for operator response based on source range count rate, are considered insignificant. Any makeup which is required during refueling will be borated water supplied either from the refueling water storage tank by the low head safety injection pumps or the centrifugal charging pumps, or from the boric acid tanks via a boric acid transfer pump and a centrifugal charging pump.

Dilution During Startup

In this mode, the plant is being taken from one long-term mode of operation, Hot Standby, to another, Power. Typically, the plant is maintained in the Startup mode only for the purpose of startup testing at the beginning of each cycle. During this mode of operation rod control is in manual. All normal actions required to change power level, either up or down, require operator initiation. Conditions assumed for the analysis are:

1. Dilution flow is the maximum capacity of the makeup water pumps, 300 gpm.

2. A minimum RCS water volume of 9019 ft^3. This corresponds to the active RCS volume excluding the pressurizer and the reactor vessel upper head.

3. The initial boron concentration is assumed to correspond to a conservative maximum value for the critical concentration at the condition of hot zero power, rods to insertion limits, and no Xenon.

4. The critical boron concentration following reactor trip is assumed to correspond to the hot zero power, all rods inserted (minus the most reactive RCCA), no Xenon condition.

Dilution Following Reactor Shutdown

Following reactor shutdown, when in hot standby, hot shutdown, and subsequent cold shutdown condition, and once below the P-6 interlock setpoint, and 10^4 counts per second, the high flux at shutdown alarm setting will be automatically adjusted downward to a nominal value of 3 times the background count rate as the background count rate reduces.

Surveillance testing in accordance with Technical Specification 3.3.9 will ensure that the alarm setpoint is operable. The operator does not depend entirely on this alarm setpoint but has audible indication of increasing neutron flux from the audible count rate drawer and visual indication from counts per second meters for each channel on the main control board and source range drawer.

Dilution at Power

In this mode, the plant may be operated in either automatic or manual rod control. Conditions assumed for the analysis are:

1. Dilution flow at power is the maximum capacity of the makeup water pumps, 300 gpm.

2. A minimum RCS water volume of 9019 ft^3. This corresponds to the active RCS volume excluding the pressurizer and the reactor vessel upper head.

3. The initial boron concentration is the conservative maximum value for the critical concentration at the condition of hot full power, rods to insertion limits, and no Xenon.

4. The critical boron concentration following reactor trip is assumed to correspond to the hot zero power, all rods inserted (minus the most reactive RCCA), no Xenon condition.

15.2.4.3 Conclusions

The time sequence of events during these transients are shown in Table 15.2-1.

For dilution during refueling:

Sufficient dilution of the RCS boron concentration during refueling cannot occur due to administrative controls (see Section 15.2.4.2) and operator response.

The operator has prompt and definite indication of any boron dilution from the audible count rate instrumentation. At all times during fuel movement, the source range audible count rate is on the refueling floor of reactor containment and the main control room. In addition, a high source range flux level at shutdown is alarmed in the control room and in the reactor containment. The count rate increase is proportional to the subcritical multiplication factor.

For dilution during startup:

This mode of operation is a transitory operational mode in which the operator intentionally dilutes and withdraws control rods to take the plant critical. During this mode, the plant is in manual control with the operator required to maintain a high awareness of the plant status. For a normal approach to criticality, the operator must manually initiate a limited dilution and subsequently manually withdraw the control rods, a process that takes several hours. The Technical Specifications require that the operator determine the estimated critical position of the control rods prior to approaching criticality, thus assuring that the reactor does not go critical with the control rods below the insertion limits. Once critical, the power escalation must be sufficiently slow to allow the operator to manually block the source range reactor trip after receiving P-6 from the intermediate range. Too fast a power escalation (due to an unknown dilution) would result in reaching P-6 unexpectedly, leaving insufficient time to manually block the source range reactor trip. Failure to perform this manual action results in a reactor trip and immediate shutdown of the reactor.

For dilution during startup, a cycle specific check demonstrates that the initial and final borons result in more than 15 minutes for operator action from the time of alarm (reactor trip on P-6) to loss of shutdown margin.

For dilution during full power operation:

With the reactor in automatic rod control, the power and temperature increase from boron dilution results in insertion of the control rods and a decrease in the available shutdown margin. The rod insertion limit alarms (LOW and LOW-LOW settings) alert the operator that a dilution event is in process and operators take action to restore margin. A cycle specific check demonstrates that the initial and final borons result in more than 15 minutes for operator action from the time of alarm (LOW-LOW rod insertion limit) to loss of shutdown margin.

With the reactor in manual control and no operator action taken to terminate the transient, the power and temperature rise will cause the reactor to reach the Overtemperature ΔT trip setpoint resulting in a reactor trip. The boron dilution transient in this case is essentially the equivalent to an uncontrolled RCCA bank withdrawal at power. The maximum reactivity insertion rate for a boron dilution is conservatively estimated to be within the range of insertion rates analyzed for the RCCA bank withdrawal at power. A cycle specific check demonstrates that the initial and final borons result in more than 15 minutes for operator action from the time of alarm (overtemperature ΔT) to loss of shutdown margin.

For Dilution Following Reactor Shutdown:

In providing a description of a boron dilution event initiated immediately after scram, it is appropriate to analyze two initial conditions. These are:

1. BOL, Equilibrium Xe

   This will result in the longest time following scram until the Source Range Nuclear Instrumentation System (NIS) is available to provide an indication of a dilution event.

2. BOL, Clean Core

   This will result in a very short time following scram for the source range NIS to become available, however, it yields the most rapid boron dilution (return to criticality) case.

Figure 15.2.4-1 shows the relative change in boron concentration with time for the two cases. The dilution rates are consistent with the time for the two cases. Figure 15.2.4-2 shows the condition of the core consistent with the boron concentrations of Figure 15.2.4-1 and Xe build-up following trip for the Eq Xe cases.

Figure 15.2.4-3 shows the information available to the operator on the core relative power based on the Nuclear Instrumentation System for the Eq Xe case. As shown there is essentially an instantaneous decrease in nuclear power from 100% to 7.5% (< 5 seconds). From 7.5% the standard 80 second period is used until the precursor isotopes have been depleted. From the point shown, an 18-day half life is assumed. For the case without Eq Xe, the NIS stable reading on source range is achieved very rapidly, < 5 minutes as opposed to 21 minutes for the Eq Xe case.

The sequence of events Table 15.2-1 show that for both cases > 15 minutes of operator action time is available. Therefore the acceptance criteria for this event is met. In addition to the High Flux at Shutdown Alarm, there is also the High Pressurizer Level Trip and alarm available. In order to return critical a very large total dilution volume is required. The only means of accommodating this large volume is to allow the pressurizer to start filling. As shown, however, this results in a High Pressurizer Level Alarm very early in the transient.

These two alarms would provide the operator an adequate set of indications that a boron dilution event was in progress and also allow adequate time for operator corrective action.

The Uncontrolled Boron Dilution event has been evaluated with respect to the CENP-Westinghouse steam generator replacement at Sequoyah Unit 1 and Unit 2. The evaluation concludes that the parameters important to the consequences of this event are not adversely affected by the RSG.

15.2.5 Partial Loss of Forced Reactor Coolant Flow

15.2.5.1 Identification of Causes and Accident Description

A partial loss of coolant flow accident can result from a mechanical or electrical failure in a reactor coolant pump, or from a fault in the power supply to the pump. If the reactor is at power at the time of the accident, the immediate effect of loss of coolant flow is a rapid increase in the coolant temperature. This increase could result in DNB with subsequent fuel damage if the reactor is not tripped promptly. The necessary protection against a partial loss of coolant flow accident is provided by the low primary coolant flow reactor trip which is actuated by two out of three low flow signals in any reactor coolant loop. Above approximately 35% power (Permissive 8), low flow in any loop will actuate a reactor trip. Between approximately 10% power (Permissive 7) and the power level corresponding to Permissive 8, low flow in any two loops will actuate a reactor trip. A reactor trip signal from the pump undervoltage relay is provided as an anticipatory signal which serves as a backup to the low flow signal. It functions essentially identically to the low flow trip so that above Permissive 7 an undervoltage relay trip signal from any two pumps will actuate a reactor trip.

The RCPs are normally powered from the Unit Station Service Transformers (USSTRs). The following analysis is bounding for the condition described above.

15.2.5.2 Analysis of Effects and Consequences

Method of Analysis

Partial loss of flow involving loss of two pumps with four loops in operation has been analyzed.

This transient is analyzed by three digital computer codes. First, the LOFTRAN Code (Reference 4) is used to calculate the loop and core flow during the transient, the time of reactor trip based on the calculated flows, the nuclear power transient, and the primary system pressure and temperature transients. The LYNXT Code (Reference 13) is then used to calculate the heat flux transient based on the nuclear power and flow from LOFTRAN. Finally, the THINC Code is used to calculate the departure from DNBR during the transient, based on the heat flux from FACTRAN and the flow from LOFTRAN. The WRB-1 correlation is used for DNBR calculation. Finally, the hot channel DNBR is determined by applying the statistical core design methodology (Reference 14) with the LYNXT computer code (Reference 13).

Typical Initial Conditions

Initial operating conditions assumed are the most adverse with respect to the margin to DNB, i.e., maximum steady state power level, minimum steady state pressure, and maximum steady state coolant average temperature. See Subsection 15.1.2 for explanation of initial conditions. In addition to the initial average temperature condition in Subsection 15.1.2, 1.5°F was added to the initial average temperature for conservatism.

Reactivity Coefficients

A conservatively large absolute value of the Doppler-only power coefficient is used (See Table 15.1.2-2). The total integrated Doppler reactivity from 0 to 100% power is assumed to be 0.016 Δk. The lowest absolute magnitude of the moderator temperature coefficient (0.0 Δk/°F) is assumed since this results in the maximum hot-spot heat flux during the initial part of the transient when the minimum DNBR is reached.

Flow Coastdown

The flow coastdown analysis is based on a momentum balance around each reactor coolant loop and across the reactor core. This momentum balance is combined with the continuity equation, a pump momentum balance and the pump characteristics and is based on high estimates of system pressure losses.

Results

The calculated sequence of events is shown on Table 15.2-1 for the case analyzed. Figures 15.2.5-1 through 15.2.5-3 show the resulting transient conditions for the 2/4 Partial Loss of Flow analysis. Included in these figures are total RCS flow, faulted loop flow, average and hot channel heat flux, nuclear power, and DNBR, each as a function of time. The minimum DNBR is not less than the safety analysis limit.

15.2.5.3 Conclusions

The analysis shows that the DNBR will not decrease below the safety analysis limit at any time during the transient. Thus there will be no cladding damage and no release of fission products to the Reactor Coolant System.

The Partial Loss of Forced Reactor Coolant Flow event has been evaluated with respect to the CENP-Westinghouse steam generator replacement at Sequoyah Unit 1 and Unit 2. The evaluation concludes that the parameters important to the consequences of this event are not adversely affected by the RSG.

15.2.6 Startup Of An Inactive Reactor Coolant Loop

15.2.6.1 Identification of Causes and Accident Description

The SQN Technical Specification requires that all reactor coolant loops be in operation during plant's startup and power operations except for special test conditions. The following analysis is for a 3 loop operation and will address startup of an inactive reactor coolant loop which may be created due to an operational error.

If the plant is operating with one pump out of service, there is reverse flow through the inactive loop due to the pressure difference across the reactor vessel. The cold leg temperature in an inactive loop is identical to the cold leg temperature of the active loops (the reactor core inlet temperature). If the reactor is operated at power, there is a temperature drop across the steam generator in the inactive loop and, with the reverse flow, the hot leg temperature of the inactive loop is lower than the reactor core inlet temperature.

Starting of an idle reactor coolant pump without bringing the inactive loop hot leg temperature close to the core inlet temperature would result in the injection of cold water into the core which causes a rapid reactivity insertion and subsequent power increase. This event is classified as an ANS Condition II incident (a fault of moderate frequency).

Should the startup of an inactive reactor coolant pump accident occur, the transient will be terminated automatically by a reactor trip on low coolant loop flow when the power range neutron flux (two out of four channels) exceeds the P-8 setpoint, which would have been previously reset for three loop operation.

15.2.6.2 Analysis of Effects and Consequences

Method of Analysis

This transient is analyzed by three digital computer codes. The LOFTRAN Code (4) is used to calculate the loop and core flow, nuclear power and core pressure and temperature transients following the startup of an idle pump. FACTRAN (3) is used to calculate the core heat flux transient based on core flow and nuclear power from LOFTRAN. The THINC Code (see Section 4.4) is then used to calculate the DNBR during the transient based on system conditions (pressure, temperature, and flow) calculated by LOFTRAN and heat flux as calculated by FACTRAN.

Plant characteristics and initial conditions are discussed in Section 15.1.2. In order to obtain conservative results for the startup of an inactive pump accident, the following assumptions are made:

1. Initial conditions of maximum core power and reactor coolant average temperatures and minimum reactor coolant pressure resulting in minimum initial margin to DNB. These values are consistent with the maximum steady state power level allowed with three loops in operation. The high initial power gives the greatest temperature difference between the core inlet temperature and the inactive loop hot leg temperature.

2. Following initiation of startup of the idle pump, flow in the inactive loop reverses and accelerates to its nominal full flow value in approximately 7 seconds.

3. A conservatively large moderator density coefficient (see Section 15.1.6).

4. A conservatively small (absolute value) negative Doppler power coefficient (see Section 15.1.6).

5. The initial reactor coolant loop flows are at the appropriate values for one pump out of service.

6. The reactor trip is assumed to occur on low coolant loop flow when the power range neutron flux exceeds the P-8 setpoint. The P-8 setpoint is conservatively assumed to be 84 percent of rated power which corresponds to the nominal setpoint plus 9 percent for nuclear instrumentation errors.

Results

The results following the startup of an idle pump with the above listed assumptions are shown in Figures 15.2.6-1 through 15.2.6-4. As shown in these curves, during the first part of the transient, the increase in core flow with cooler water results in an increase in nuclear power and a decrease in core average water temperature. The minimum DNBR during the transient is considerably greater than the safety analysis limit. See Section 4.4 for a description of the DNBR design basis.

Reactivity addition for the inactive loop startup accident is due to the decrease in core water temperature. During the transient, this decrease is due both to the increase in reactor coolant flow and, as the inactive loop flow reverses, to the colder water entering the core from the hot leg side (colder temperature side prior to the start of the transient) of the steam generator in the inactive loop. Thus, the reactivity insertion rate for this transient changes with time. The resultant core nuclear power transient, computed with consideration of both moderator and Doppler reactivity feedback effects, is shown on Figure 15.2.6-2.

The calculated sequence of events for this accident is shown on Table 15.2-1. The transient results illustrated in Figures 15.2.6-1 through 15.2.6-4 indicate that a stabilized plant condition, with the reactor tripped, is approached rapidly. Plant cooldown may subsequently be achieved by following normal shutdown procedures.

15.2.6.3 Conclusions

The transient results show that the core is not adversely affected, i.e., there is considerable margin to the DNB safety analysis limit.

Operation of the Sequoyah Nuclear Plant with fewer than 4 RCP's in operation is prohibited (except during special test conditions) by plant Technical Specifications. The startup of an inactive reactor coolant loop event, therefore, is not considered as a safety issue with replacement steam generators.

15.2.7 Loss Of External Electrical Load And/Or Turbine Trip

15.2.7.1 Identification of Causes and Accident Description

Major load loss on the plant can result from loss of external electrical load or from a turbine trip. For either case off site power remains available for the continued operation of plant components such as

the reactor coolant pumps. The case of loss of all AC power (station blackout) is analyzed in Subsection 15.2.9. Following the loss of generator load, an immediate fast closure of the turbine control valves will occur. This will cause a sudden reduction in steam flow, resulting in an increase in pressure and temperature in the steam generator shell. As a result, the heat transfer rate in the steam generator is reduced, causing the reactor coolant temperature to rise, which in turn causes coolant expansion, pressurizer insurge, and RCS pressure rise.

For a turbine trip, the reactor would be tripped directly (unless below approximately 50% power) from a signal derived from the turbine emergency trip header pressure or the turbine stop valve position. The turbine stop valves close on loss of emergency trip header pressure actuated by one of a number of possible turbine trip signals. Turbine-trip initiation signals include:

1. Generator Trip
2. Low Condenser Vacuum
3. Loss of Lubricating Oil
4. Turbine Thrust Bearing Failure
5. Turbine Overspeed
6. Manual Trip

Upon initiation of stop valve closure, steam flow to the turbine stops abruptly. Sensors associated with the stop valves detect the turbine trip and initiate the turbine trip and initiate steam dump and if above 50 percent power, a reactor trip. The loss of steam flow results in an almost immediate rise in secondary system temperature and pressure with a resultant primary system transient.

The automatic steam dump system would accommodate the excess steam generation. Reactor coolant temperatures and pressure do not significantly increase if the steam dump system and pressurizer pressure control system are functioning properly. If the turbine condenser were not available, the excess steam generation would be dumped to atmosphere through the steam generator relief and safety valves. Additionally, main feedwater flow would be lost if the turbine condenser was not available. For this situation feedwater flow would be maintained by the Auxiliary Feedwater System.

The Sequoyah plant is designed to accept a load rejection of 50 percent of its rated electrical load, and signals from the reactor protection system will trip the plant for load rejections in sufficient excess of 50 percent of rated load.

In the event the steam dump valves fail to open following a large loss of load, the steam generator safety valves may lift and the reactor may be tripped by the high pressurizer pressure signal, the high pressurizer water level signal, the overtemperature ΔT signal, or the steam generator Low-Low Level Signal. The steam generator shell side pressure and reactor coolant temperatures will increase rapidly. The pressurizer safety valves and steam generator safety valves are, however, sized to protect the Reactor Coolant System and steam generators against overpressure for all load losses without assuming the operation of the steam dump system, pressurizer spray, pressurizer power operated relief valves, automatic rod cluster control assembly control or direct reactor trip on turbine trip.

The steam generator safety valve capacity is sized to remove the original maximum calculated turbine steam flow from the steam generator without exceeding 110 percent of the steam system design pressure. The pressurizer safety valve capacity is sized based on a complete loss of heat sink with the plant initially operating at the maximum calculated turbine load along with operation of the steam generator safety valves. The pressurizer safety valves are then able to maintain the Reactor Coolant System pressure within 110 percent of the Reactor Coolant System design pressure without direct or immediate reactor trip action.

A more complete discussion of overpressure protection can be found in Reference 8.

Normal power for the reactor coolant pumps is supplied through busses from a transformer connected to the preferred off-site power system.

The following is background on where the 30 second value came from and is based on the original plant design. In the alternate or maintenance power supply configuration, when a generator trip occurs, the busses are automatically transferred to a transformer supplied from external power lines, and the pumps will continue to supply coolant flow to the core. Following any turbine trip where there are no electrical faults which require tripping the generator from the network, the generator remains connected to the network for approximately 30 seconds. The reactor coolant pumps remain connected to the generator, thus ensuring flow for 30 seconds before any transfer is made. The analysis of effects and consequences for this condition is based on the alternate power supply configuration and is bounding.

Should the network bus transfer fail at 30 seconds, a complete loss of forced reactor coolant flow would result. This assumption is made for the analysis of a complete loss of load at approximately 50% power without direct reactor trip. The immediate effect of loss of coolant flow is a rapid increase in the coolant temperature in addition to the increased coolant temperature as a result of the turbine trip. This increase could result in DNB with subsequent fuel damage if the reactor were not tripped promptly.

The following signals provide the necessary protection against a complete loss of flow accident:

1. Reactor coolant pump power supply undervoltage or underfrequency

2. Low reactor coolant loop flow

The reactor trip on reactor coolant pump undervoltage is provided to protect against conditions which can cause a loss of voltage to all reactor coolant pumps, i.e., station blackout. This function is blocked below approximately 10 percent power (Permissive 7).

The reactor trip on reactor coolant pump underfrequency is provided to open the reactor coolant pump breakers and trip the reactor for an underfrequency condition, resulting from frequency disturbances on the major power grid. The trip disengages the reactor coolant pumps from the power grid so that the pump's kinetic energy is available for full coastdown.

The reactor trip on low primary coolant loop flow is provided to protect against loss of flow conditions which affect only one reactor coolant loop. This function is generated by two out of three low flow signals per reactor coolant loop. Between approximately 10 percent power (Permissive 7) and the power level corresponding to Permissive 8, low flow in any two loops will actuate a reactor trip.

15.2.7.2 Analysis of Effects and Consequences

Methods of Analysis

The minimum DNBR for a total loss of load transient is bounded by the value calculated for a complete loss of forced reactor coolant flow (15.3.4). Consequently, the analysis of total loss of load is performed to show the adequacy of the pressure relieving devices on the primary and secondary systems. Two loss of load cases are analyzed. These are a loss of load from 102 percent of full power and a total loss of load from 52 percent of full power.

AREVA reanalyzed the total loss of load from 100 percent rated thermal power plus calorimetric uncertainties for the Cycle 9 reload with AREVA Mark-BW fuel because this event is the limiting overpressure event of the primary and secondary systems. The transient was analyzed using the RELAP5/MOD2-B&W computer program (Reference 12) to generate the time response of the primary system, secondary system and core average power. The reactor was not tripped on the turbine trip, but tripped later on a high pressurizer pressure trip. Main feedwater flow is terminated at the time of turbine trip, with no credit taken for auxiliary feedwater to mitigate the consequences of the transient. In addition, no credit is taken for steam dump and worst case lift tolerance of six percent is assumed for the main steam safety valves. Two of three pressurizer safety valves, each with a lift tolerance of five percent, are assumed to be available to mitigate the primary system pressure transient. Although this is not the limiting event for minimum DNBR, the system and core power responses predicted by RELAP5/MOD2-B&W are used to determine the minimum DNBR for the event by employing the statistical core design methodology of BAW-10170 (Reference 14).

AREVA analyzed the loss of load from 100 percent rated thermal power plus calorimetric uncertainties with credit taken for the operation of pressurizer sprays and the pressurizer power operated relief valves (PORVs). The operation of pressurizer sprays and the pressurizer PORVs result in a delay in reactor trip. By delaying a reactor trip, the mismatch between core power generation and secondary heat removal capability is maximized. This results in a higher peak secondary pressure.

The total loss of load transient from 52 percent of full power is analyzed by employing the detailed digital computer program LOFTRAN. The program simulates the neutron kinetics, Reactor Coolant System, pressurizer, pressurizer relief and safety valves, pressurizer spray, steam generator, and steam generator safety valves. The program computes the pertinent plant variables including temperatures, pressures, and power level. The core limits as illustrated in Figure 15.1.3-1 are used as input to LOFTRAN to determine the minimum DNBR of the typical or thimble cell during the transient. In this analysis, the behavior of the unit is evaluated for a complete loss of steam load from 52 percent of full power without reactor trip. The turbine is assumed to trip without actuating all the sensors for reactor trip on the turbine stop valves. The assumption delays reactor trip until conditions in the RCS result in a trip due to other signals. Thus, the analysis assumes a worst transient. In addition, no credit is taken for steam dump. Main feedwater is terminated at the time of turbine trip, with no credit taken for auxiliary feedwater to mitigate the consequences of the transient.

A fast bus transfer is attempted 30 seconds following the loss of steam load from 52 percent power. The transfer to an external power source is assumed to fail which results in a complete loss of flow transient initiated from the loss of load condition. The loss of flow transient, due to the assumed failure of the fast bus transfer, is analyzed by employing the detailed digital computer codes LOFTRAN (4), FACTRAN (3), and THINC Subparagraph 4.4.3.4. The FACTRAN code calculates the heat flux transient based on the nuclear power and flow from LOFTRAN. Finally, the THINC code calculates the DNBR during the transient based on the heat flux from FACTRAN and flow from LOFTRAN.

Typical assumptions are:

1. Initial Operating Conditions - The initial reactor coolant pressure is set to the nominal value for the 102 percent power case. To maximize the pressure response, the initial primary system average temperature was set to the nominal value minus four degrees for control band and measurement uncertainty. For the loss of load from 52 percent power, the initial reactor power and Reactor Coolant System temperatures are assumed at their maximum values consistent with the power level including allowances for calibration and instrument errors. The initial Reactor Coolant System pressure for this case is assumed at a minimum value that includes allowances for calibration and instrument errors. Table 15.2.7-1 summarizes the initial conditions assumed.

2. Moderator and Doppler Coefficients of Reactivity - Sensitivity calculations show that the maximum primary system pressure is obtained for beginning-of-life conditions. Consequently, for the two loss of load cases analyzed from 100 percent rated thermal power plus calorimetric uncertainty, a moderator coefficient of +7.0 pcm/F (peak primary system pressure case), and +0.0 pcm/F (peak secondary system pressure case), and the least negative Doppler power coefficient are used. The total loss of load from 52 percent power is analyzed for both beginning-of-life and end-of-life conditions. Moderator temperature coefficients of zero at beginning-of-life and a large (absolute value) negative value at end-of-life were used. A conservatively large (absolute value) Doppler power coefficient is used for all cases.

3. Reactor Control - From the standpoint of the maximum pressures attained it is conservative to assume that the reactor is in manual control.

4. Steam Release - No credit is taken for the operation of the steam dump system or steam generator power operated relief valves. The steam generator pressure rises to the safety valve setpoint (plus lift tolerances, where applicable) where steam release through safety valves limits secondary steam pressure near the lift value.

5. Pressurizer Spray and Power Operated Relief Valves - To maximize the primary system pressure response to a total loss of load from 100 percent rated thermal power plus calorimetric uncertainty, no credit is taken for the pressurizer spray or pressurizer PORVs. For the loss of load from 100 percent rated thermal power plus calorimetric uncertainty analyzed to determine peak secondary system pressure, the pressurizer spray and pressurizer PORVs are modeled in order to delay a reactor trip and maximize the secondary system pressure. For the loss of load from 52 percent power, two cases for both the beginning and end-of-life are analyzed:

   a. Full credit is taken for the effect of pressurizer spray and power operated relief valves in reducing or limiting the coolant pressure.

   b. No credit is taken for the effect of pressurizer spray and power operated relief valves in reducing or limiting the coolant pressure. Pressurizer heater operation is assumed since heater operation on high pressurizer water level will tend to increase the maximum surge rate through the pressurizer safety valves.

6. Feedwater Flow - Main feedwater flow to the steam generators is assumed to be lost at the time of turbine trip. No credit is taken for auxiliary feedwater flow since a stabilized plant condition will be reached before auxiliary feedwater initiation is normally assumed to occur. However, the auxiliary feedwater pumps would be expected to start on a trip of the main feedwater pumps. The auxiliary feedwater flow would remove core decay heat following plant stabilization.

7. Reactor Trip - Reactor trip is actuated by the first Reactor Protection System trip setpoint reached with no credit taken for the direct reactor trip on the turbine trip. Trip signals are expected due to high pressurizer pressure, overtemperature ΔT, high pressurizer water level, low reactor coolant loop flow, reactor coolant pump power supply undervoltage, and low-low steam generator water level.

Except as discussed above, normal reactor control system and Engineered Safety Systems are not required to function.

The Reactor Protection System may be required to function following a turbine trip. Pressurizer safety valves and/or steam generator safety valves may be required to open to maintain system pressures below allowable limits. No single active failure will prevent operation of any system required to function.

Results

The transient response for a total loss of load from 100 percent rated thermal power plus calorimetric uncertainties analyzed for peak primary pressure is shown in Figures 15.2.7-1 through 15.2.7-6. Following closure of the turbine stop valves, the primary pressure increases causing a reactor trip on high pressurizer pressure. Control rod insertion terminates the transient. Actuation of the pressurizer safety valves ensures that the primary system pressure remains below the acceptance criterion. Likewise, the main steam safety valves ensure that the secondary system pressure does not exceed 110 percent of design. The DNBR remains above the limit at all times. The sequence of events is shown in Table 15.2-1.

The transient response for a total loss of load from 100 percent rated thermal power plus calorimetric uncertainties analyzed for peak secondary pressure is shown in Figures 15.2.7-1b through 15.2.7-5b. Following closure of the turbine, the primary system pressure increases resulting in actuation of pressurizer sprays and opening of the pressurizer PORVs. Secondary pressure increases and eventually the main steam safety valves lift to limit the pressure increase. The energy mismatch between core power generation and secondary heat removal eventually results in a reactor trip on over-temperature ΔT. Control rod insertion terminates the transient. Actuation of the pressurizer sprays and opening of the pressurizer PORVs maintains primary system pressure below the 110 percent of design pressure. Adequate steam relief through the main steam safety valves ensures secondary system pressure remains below 110 percent of design pressure. Figure 15.2.7-7 shows the transient DNBR response for Advanced W17 HTP fuel. The DNBR remains above the limit at all times. The sequence of events is shown in Table 15.2-1.

The transient responses for a turbine trip from 52% of full power operation are shown for four cases: two cases for minimum reactivity feedback (beginning of core life) and two cases for maximum reactivity feedback (end of core life). These results are shown in Figures 15.2.7-9 through 15.2.7-16. The calculated sequence of events for this accident is shown on Tables 15.2.7-2 and 15.2.7-3.

Figures 15.2.7-9 and 15.2.7-10 show the transient responses for the total loss of steam load with a least negative moderator temperature coefficient assuming full credit for the pressurizer spray and pressurizer power-operated relief valves. No credit is taken for the steam dump. The fast bus transfer is attempted and assumed to fail 30 seconds after the total loss of steam load. The transfer failure results in an undervoltage trip of the reactor and the initiation of the loss of flow transient. The minimum DNBR remains well above the safety analysis limit. The steam generator safety valves limit the secondary steam conditions to saturation at the safety valve setpoint.

Figures 15.2.7-11 and 15.2.7-12 show the responses for the total loss of steam load with a large negative moderator temperature coefficient. All other plant parameters are the same as the above. The minimum DNBR remains well above the safety analysis limit throughout the transient. Pressurizer relief valves and steam generator safety valves prevent overpressurization in primary and secondary systems, respectively.

The turbine trip accident was also studied assuming the plant to be initially operating at 52% of full power with no credit taken for the pressurizer spray, pressurizer power-operated relief valves, or steam dump. The reactor is tripped on the high pressurizer pressure signal. With the plant in the alternate or maintenance auxiliary power supply configuration (generator supplying station power), the fast bus transfer for this case is assumed to fail at 30 seconds after the total loss of load. Figures 15.2.7-13 and 15.2.7-14 show the transients with a least negative moderator coefficient. The neutron flux remains essentially constant at 52% of full power until the reactor is tripped. The DNBR remains above the safety analysis limit throughout the transient. In this case the pressurizer safety valves are actuated and maintain system pressure below 110% of the design value.

Figures 15.2.7-15 and 15.2.7-16 are the transients with maximum reactivity feedback with the other assumptions being the same as in the preceding case. Again, the minimum DNBR remains above the safety analysis limit throughout the transient. In this case, the pressurizer safety valves are momentarily actuated.

Reference 8 presents additional results of analysis for a complete loss of heat sink including loss of main feedwater. This report shows the overpressure protection that is afforded by the pressurizer and steam generator safety valves.

The time sequence of events during this transient is shown in Table 15.2-1.

15.2.7.3 Framatome ANP Safety Evaluation With Replacement Steam Generators

The parameters that affect the peak secondary pressure are the primary-to-secondary heat transfer rate, MSSV characteristics, and the pressure differential between the MSSVs and the peak steam generator pressure location. The peak RCS pressure is a function of the initial secondary pressure, primary-to-secondary heat transfer rate, pressurizer safety valve capacity, and high pressurizer pressure reactor trip setpoint.

An analysis was performed by Framatome ANP to demonstrate that the peak secondary pressure would remain below the acceptance criteria following a loss of electrical load event at Sequoyah Unit 1 with RSGs. The analysis was performed with the RELAP5/MOD2 computer code using a Sequoyah specific plant model.

The RELAP5 peak secondary pressure was obtained using a maximum RCS average temperature and 0% tube plugging in the RSGs. This resulted in a peak steam generator pressure of 1206 psia, which is less than the pressure limit of 1208 psia. Because the acceptance criteria would not be exceeded following a loss of electrical load event at Sequoyah Unit 1 using the RSGs, there is no reduction in the margin of safety associated with the replacement. This conclusion is applicable to Unit 2 because of virtually identical RSG's installed between Units.

To validate Technical Specification Table 3.7.1-1, partial power cases were also analyzed with different numbers of MSSVs out of service. These analyses yielded secondary pressure below the acceptance limit. Therefore, the Technical Specification table is still valid with the RSGs.

15.2.7.4 Conclusions

Results of the analyses, including those in Reference 8 show that the plant design is such that a total loss of external electrical load without a direct or immediate reactor trip presents no hazard to the integrity of the RCS or the main steam system. Pressure relieving devices incorporated in the two systems are adequate to limit the maximum pressures to within the design limits.

The integrity of the core is maintained by operation of the Reactor Protection System, i.e., the DNBR will be maintained above the safety analysis limit. Thus there will be no cladding damage and no release of fission products to the Reactor Coolant System.

15.2.8 Loss of Normal Feedwater

15.2.8.1 Identification of Causes and Accident Description

A loss of normal feedwater (from pump failures, valve malfunctions, or loss of offsite AC power) results in a reduction in capability of the secondary system to remove the heat generated in the reactor core. If the reactor were not tripped during this accident, core damage would possibly occur from a sudden loss of heat sink. If an alternative supply of feedwater were not supplied to the plant, residual heat following reactor trip would heat the primary system water to the point where water relief from the pressurizer would occur. Significant loss of water from the Reactor Coolant System (RCS) could conceivably lead to core damage. Since the plant is tripped well before the steam generator heat transfer capability is reduced, the primary system variables never approach a DNB condition.

The worst postulated loss of normal feedwater event is one initiated by a loss of offsite AC power which is described in Section 15.2.9. This is due to the decreased capability of the reactor coolant to remove residual core heat as a result of the RCP coastdown.

The following events occur upon loss of normal feedwater (assuming main feedwater pump failures or valve malfunctions):

A. As the steam system pressure rises following the trip, the steam generator power-operated relief valves are automatically opened to the atmosphere. Steam dump to the condenser is assumed not to be available. If the steam flow rate through the power-operated relief valves is not available, the steam generator safety valves may lift to dissipate the sensible heat of the fuel and coolant plus the residual decay heat produced in the reactor.

B. As the no-load temperature is approached, the steam generator power-operated relief valves (or safety valves if the power-operated relief valves are not available) are used to dissipate the residual decay heat and to maintain the plant at the hot shutdown condition.

The following provides the necessary protection against a loss of normal feedwater:

1. Reactor trip on low-low water level in any steam generator.

2. Two motor driven auxiliary feedwater pumps which are started on:

    a. Low-low level in any steam generator

b. Trip of both feedwater pumps

c. A safety injection signal

d. Loss of offsite power

e. Manual actuation

f. Loss of one main feedwater pump with turbine load greater than 77% (Unit 2) and 76.6% (Unit 1).

3. One turbine driven auxiliary feedwater pump which utilizes steam from the steam generators is started on:

a Low-low level in any two steam generators, or

b. Trip of both feedwater pumps

c. Loss of offsite power

d. Safety injection signal

e. Manual actuation

f. Loss of one main feedwater pump with turbine load greater than 77% (Unit 2) and 76.6% (Unit 1).

The motor driven auxiliary feedwater pumps are supplied with power by the diesel generators if a loss of offsite power occurs and the turbine-driven pump utilizes steam from the main steam system. Both type pumps are designed to supply at least, minimum required flow within one minute of the initiating signal even if a loss of all non-emergency AC power occurs simultaneously with loss of normal feedwater. The turbine exhausts the used steam to the atmosphere. The auxiliary pumps take suction from the condensate storage tank for delivery to the steam generators.

An analysis of the system transient is presented below to show that following a loss of normal feedwater, the auxiliary feedwater system is capable of removing the stored and residual heat, thus, preventing either overpressurization of the Reactor Coolant System or loss of water from the reactor core.

The analysis takes into account a maximum of 15 percent uniform tube plugging in the steam generators.

15.2.8.2 Analysis of Effects and Consequences

Method of Analysis

A detailed analysis using the RELAP5/MOD2 (Reference 12) is performed to obtain the plant parametric response due to a loss of normal feedwater. The digital computer simulation of RELAP5 includes plant nuclear kinetics, reactor coolant system (with pressurizer and steam generators), main

feedwater, auxiliary feedwater, and safety injection systems. The code computes the resultant system parameters including the steam generator level, pressurizer water level, and the reactor coolant average temperature.

Major assumptions are:

1. The plant is initially operating at 102% of 3423 MWt.

2. Core decay heat is conservatively calculated based upon 1.0 times ANS 5.1 of 1971 decay heat curve with B&W heavy actinides contribution to decay heat.

3. Only one motor driven auxiliary feedwater pump is available one minute after the low-low steam generator level signal is initiated in any steam generator.

4. Auxiliary feedwater flow rate of 410 gpm is split uniformly between two steam generators.

5. Secondary system steam relief is achieved through the self-actuated safety valves. Note that steam relief will, in fact, be through the power operated relief valves or condenser dump valves for most cases of loss of normal feedwater. However, for the sake of analysis these have been assumed unavailable.

6. The initial reactor coolant average temperature is 5.5°F higher than the nominal value since this results in a greater expansion of Reactor Coolant System water during the transient and, thus, in a higher water level in the pressurizer.

Results

Figures 15.2.8-1 through 15.2.8-4 show plant parameters following a loss of normal feedwater. Following the reactor and turbine trip from full load, the water level in the steam generators will fall due to the reduction of steam generator void fraction and because steam flow through the safety valves continues to dissipate the stored and generated heat. One minute following the initiation of the low-low level trip, at least one auxiliary feedwater pump is automatically started, reducing the rate of water level decrease in two steam generators.

The capacity of one motor driven auxiliary feedwater pump is such that the water level in two steam generators does not recede below the lowest level at which sufficient heat transfer area is available to dissipate core residual heat without water relief from the RCS relief or safety valves. Figure 15.2.8-2b shows that at no time is there water relief from the pressurizer.

The calculated sequence of events for this accident is listed in Table 15.2-1. As shown in Figures 15.2.8-1 through 15.2.8-4, the plant approaches a stabilized condition following reactor trip and auxiliary feedwater initiation.

15.2.8.3 Conclusions

Results of the analysis show that a loss of normal feedwater does not adversely affect the core, the RCS, or the steam system since the auxiliary feedwater capacity is such that the reactor coolant water is not relieved from the pressurizer relief or safety valves.

The Loss of Normal Feedwater event has been evaluated with respect to the CENP-Westinghouse steam generator replacement at Sequoyah Unit 1 and Unit 2. The evaluation concludes that the parameters important to the consequences of this event are not adversely affected by the RSG.

15.2.9 Loss of Off-Site Power to the Station Auxiliaries

15.2.9.1 Identification of Causes and Accident Description

In the event of a complete loss of offsite power and a turbine trip there will be a loss of power to the plant auxiliaries, i.e., the reactor coolant pumps, condensate pumps, etc.

The events following a loss of AC power with turbine and reactor trip are described in the sequence listed below:

1. Plant vital instruments are supplied by emergency power sources.

2. As the steam system pressure rises following the trip, the steam system power operated relief valves may be automatically opened to the atmosphere. Steam dump to the condenser is assumed not to be available. If the steam flow rate through the power relief valves is not available, the steam generator safety valves may lift to dissipate the sensible heat of the fuel and coolant plus the residual decay heat produced in the reactor.

3. As the no load temperature is approached, the steam generator power-operated relief valves (or safety valves, if the power-operated relief valves are not available) are used to dissipate the residual decay heat and to maintain the plant at the hot shutdown condition.

4. The Class 1E standby diesel generators, started on loss of voltage on the plant emergency busses, begin to supply plant vital loads.

The auxiliary feedwater system is started automatically as discussed in the loss of normal feedwater analysis. The turbine driven auxiliary feedwater pump utilizes steam from the main steam system and exhausts to the atmosphere. The motor driven auxiliary feedwater pumps are supplied by power from the diesel generators. The auxiliary feedwater pumps take suction from the condensate storage tank for delivery to the steam generators.

Following the RCP coastdown caused by the loss of AC power, the natural circulation capability of the RCS will remove residual and decay heat from the core, aided by auxiliary feedwater in the secondary system. An analysis is presented here to show that the natural circulation flow in the RCS following a loss of AC power event is sufficient to remove residual heat from the core.

The analysis presented takes into account a maximum of 15 percent uniform tube plugging in the steam generators.

15.2.9.2 Analysis of Effects and Consequences

Method of Analysis

A detailed analysis using RELAP5/MOD2 (Reference 12) is performed to obtain the plant parametric response due to a loss of offsite power. The digital computer simulation of RELAP5 includes plant

nuclear kinetics, reactor coolant system (with pressurizer and steam generators), main feedwater, auxiliary feedwater, and safety injection systems. The code computes the resultant system parameters including the steam generator level, pressurizer water level, and the reactor coolant average temperature.

Major assumptions are:

1. The plant is initially operating at 100.7% of 3455 MWt.

2. Core decay heat is conservatively calculated based upon 1.0 times ANS 5.1 of 1971 decay heat curve with B&W heavy antinides contribution to decay heat.

3. Only one motor-driven auxiliary feedwater pump is available one minute after the low-low steam generator level signal is initiated in any steam generator.

4. Auxiliary feedwater flow rate of 410 gpm is split uniformly between two SGs.

5. The initial reactor coolant average temperature is 7.0°F lower than the nominal value since this results in a greater expansion of Reactor Coolant System water during the transient and a higher water level in the pressurizer.

Results

The transient response of the RCS following a loss of AC power is shown in Figures 15.2.9.1 through 15.2.9.4. The calculated sequence of events for this event is listed in Table 15.2-1.

The first few seconds of the transient following receipt of a reactor trip signal will closely resemble a simulation of the complete loss of flow incident (see Subsection 15.3.4), i.e., core damage due to rapidly increasing core temperatures is prevented by promptly tripping the reactor. After the reactor trip, stored and residual decay heat must be removed to prevent damage to either the RCS or the core.

15.2.9.4 Conclusions

Results of the "Complete Loss of Forced Reactor Coolant Flow" analysis (Section 15.3) and the loss of non-emergency AC power to the station auxiliaries show that no adverse conditions occur in the reactor core. The DNBR is maintained above the safety limit. The Reactor Coolant System is not overpressurized and no water relief will occur through the pressurizer relief valves. The pressurizer safety valves do not lift. Thus there will be no cladding damage and no release of fission products to the RCS.

15.2.10 Excessive Heat Removal Due to Feedwater System Malfunctions

15.2.10.1 Identification of Causes and Accident Description

Reductions in feedwater temperature or additions of excessive feedwater are means of increasing core power above full power. Such transients are attenuated by the thermal capacity of the secondary plant and of the RCS. The overpower - overtemperature protection (high neutron flux, overtemperature and overpower ΔT trips) prevents any power increase which could lead to a DNBR less than the safety analysis limit.

Excessive feedwater flow could be caused by a full opening of one or more feedwater regulator valves due to a feedwater control system malfunction or an operator error. At power this excess flow causes a greater load demand on the RCS due to increased subcooling in the steam generators. With the plant at no-load conditions, the addition of cold feedwater may cause a decrease in RCS temperature and thus a reactivity insertion due to the effects of the negative moderator coefficient of reactivity. Continuous addition of excessive feedwater is prevented by the steam generator high-high level trip, which closes all feedwater regulator isolation valves, trips main feedwater pumps and trips the turbine.

15.2.10.2 Analysis of Effects and Consequences

Method of Analysis

The excessive heat removal due to a feedwater system malfunction transient is analyzed by using the detailed digital computer codes, RELAP5 and LYNXT (References 12 and 13). The codes are described in section 15.1.9.8 and section 15.1.9.11, respectively. The core limits as illustrated in Figure 15.1.3-1 are used as input to the RELAP5 and LYNXT codes to determine the minimum DNBR during the transient for the full power case. The RELAP5 model used incorporated a detailed representation of the condensate and feedwater system piping including the feedwater heaters, condensate booster pumps, and the main feedwater pumps.

Operation With Digital Feedwater Control

The system is analyzed to evaluate plant behavior in the event of a feedwater system malfunction. The multi-loop failure mode was eliminated in the digital control system. The single loop failure mode in the digital control system will cause the main feedwater pump speed demand signal to both pumps to increase to a maximum value. The digital control system analysis addresses this failure mode by modeling the maximum feed pump speed allowed by the pump overspeed protection equipment.

Excessive feedwater addition due to a control system malfunction or operator error which allows one or more feedwater control valves to open fully is considered. The most limited cases are discussed.:

1. Accidental opening of all feedwater regulating valves and feedwater regulating bypass valves to the full open position in a single loop with the reactor at zero load.

2. Accidental opening of all feedwater regulating valves and feedwater regulating bypass valves to the full open position in a single loop with the reactor at full power.

The plant response following a feedwater system malfunction is calculated with the following assumptions:

1. Reactor at zero load

    a. The reactor is assumed to be just critical in the hot shutdown condition.

    b. An increase in feedwater flow to one steam generator from zero flow to full flow assuming 2 condensate booster pumps are operating at maximum rpm and 1 main feed pump is operating at the maximum speed allowed by the pump overspeed trip with maximum uncertainty applied.

    c. The feedwater temperature is assumed at a conservatively low value of 58°F, corresponding to lowest condenser hotwell conditions.

2. Reactor at full power

    a. Initial operating conditions are assumed at extreme values consistent with the steady state full power operation allowing for calibration and instrument errors. This results in minimum margin to DNB at the start of the accident.

b. Both automatic and manual rod control was assumed for each of the full power cases. The results from the most limiting scenario are presented.

c. A step increase in feedwater flow to one steam generator from nominal flow to full flow assuming all 3 condensate booster pumps are operating at maximum rpm and 2 main feed pumps are operating at the maximum speed allowed by the pump overspeed trip with maximum uncertainty applied.

3. For cases 1 and 2,

a. The initial water level in all steam generators is at a conservatively low level for the initial conditions.

b. No credit is taken for the heat capacity of the Reactor Coolant System in attenuating the resulting plant cooldown.

c. The feedwater flow from a fully open regulator valve is terminated by the steam generator high-high level signal which closes all feedwater regulator valves and feedwater isolation valves and trips the main feedwater pumps.

d. A conservatively large moderator coefficient of reactivity characteristic of end of life core conditions is used.

Results

For the case of an accidental full opening of all feedwater regulating valves and feedwater regulating bypass valves in a single loop with the reactor at zero power and the above mentioned assumptions, the maximum reactivity insertion rate is less than the maximum reactivity insertion rate analyzed in Subsection 15.2.1, Uncontrolled Control Rod Assembly Withdrawal from a Subcritical Condition, and therefore, the results of the analyses are not presented. It should be noted that if the incident occurs with the unit just critical at no load, the reactor may be tripped by the power range high neutron flux trip (low setting) set at approximately 35 percent.

The full power cases give the largest reactivity feedback and result in the greatest power increases. Transient results for operation with the digital feedwater control (see Figures 15.2.10-1 thru 15.2.10-5) show the pressurizer pressure, T_{avg}, and DNBR, as well as the increase in nuclear power and ΔT_{avg}, associated with the increased thermal load on the reactor. A turbine trip is actuated when the steam generator level reaches the high-high level setpoint. The DNB ratio does not drop below the safety analysis limit.

For all excessive feedwater cases continuous addition of cold feedwater is prevented by closure of all feedwater control valves and a trip of the feedwater pumps on steam generator high-level.

The time sequence of events during this transient is shown in Table 15.2-1.

15.2.10.3 Conclusions

It has been shown that the reactivity insertion rate which occurs at no load following excessive feedwater addition is less than the maximum value considered in the analysis of the rod withdrawal from a subcritical condition. Also, the DNB ratios encountered for excessive feedwater addition at power are well above the safety analysis limit.

The Excessive Heat Removal due to Feedwater System Malfunctions event has been evaluated with respect to the CENP-Westinghouse steam generator replacement at Sequoyah Unit 1 and Unit 2. The evaluation concludes that the parameters important to the consequences of this event are not adversely affected by the RSG.

15.2.11 Excessive Load Increase

15.2.11.1 Identification of Causes and Accident Description

An excessive load increase incident is defined as a rapid increase in the steam flow that causes a power mismatch between the reactor core power and the steam generator load demand. The reactor control system is designed to accommodate a 10% step load increase or a 5% per minute ramp load increase in the range of 15 to 100% of full power. Any loading rate in excess of these values may cause a reactor trip actuated by the Reactor Protection System.

This accident could result from either an administrative violation such as excessive loading by the operator or an equipment malfunction in the steam dump control or turbine speed control.

During power operation, steam dump to the condenser is controlled by reactor coolant condition signals; i.e., high reactor coolant temperature indicates a need for steam dump. A single controller malfunction does not cause steam dump; an interlock is provided which blocks the opening of the valves unless a large turbine load decrease or a reactor trip has occurred.

Protection against an excessive load increase accident is provided by the following Reactor Protection System signals:

1. Overpower ΔT

2. Overtemperature ΔT

3. Power range high neutron flux

15.2.11.2 Analysis of Effects and Consequences

Method of Analysis

System and nuclear response is performed using the RELAP5/MOD2-B&W computer code (Reference 12). The RELAP5/MOD2-B&W code simulate the neutron kinetics, reactor coolant system and steam system thermal-hydraulics. The code is described in Section 15.1.9.8.

The LYNXT computer code (Reference 13) is utilized to predict core subchannel thermal-hydraulic effects and uses boundary conditions generated with RELAP5/MOD2-B&W. Margin to the occurrence of DNB in the hottest fuel pin is predicted via the application of LYNXT for the excessive load increase transient. LYNXT is described in Section 15.1.9.11.

Four cases are analyzed to demonstrate the plant behavior following a 10% step load increase from rated load. These cases are as follows:

1. Manually controlled reactor at beginning-of-life.

2. Manually controlled reactor at end-of-life.

3. Reactor in automatic control at beginning-of-life.

4. Reactor in automatic control at end-of-life.

At beginning of life the core has the least negative moderator temperature coefficient of reactivity and therefore the least inherent transient capability. At end of life the moderator temperature coefficient of reactivity has its highest absolute value. This results in the largest amount of reactivity feedback due to changes in coolant temperature.

A conservative limit on the turbine valve opening is assumed, and all cases are studied without credit being taken for pressurizer heaters. Initial operating conditions are assumed at extreme values consistent with the steady state full power operation allowing for calibration and instrument errors. This results in minimum margin to DNB at the start of the event.

Results

Figures 15.2.11-1 through 15.2.11-4 illustrate the transient with the reactor in the manual control mode. As expected, for the beginning of life case there is no significant power increase (zero moderator feedback), and the average core temperature shows a large decrease. This results in a DNBR which increases above its initial value. For the end of life manually controlled case there is a much larger increase in reactor power due to the moderator feedback. A reduction in DNBR is experienced but DNBR remains above the safety analysis limit.

Figures 15.2.11-5 through 15.2.11-8 illustrate the transient assuming the reactor is in the automatic control mode. Both the beginning of life and the end of life cases show that core power increases, thereby reducing the rate of decrease in coolant average temperature and pressurizer pressure. For both the beginning of life and end of life cases, the minimum DNBR remains above the safety analysis limit. The time sequence of events for this transient is shown in Table 15.2-1.

15.2.11.3 Conclusions

The Excessive Load Increase has been evaluated with respect to the CENP-Westinghouse steam generator replacement at Sequoyah Unit 1 and Unit 2. The evaluation concludes that the parameters important to the consequences of this event are not adversely affected by the RSG.

It has been demonstrated that for an excessive load increase the minimum DNBR during the transient will not be below the safety analysis limit.

15.2.12 Accidental Depressurization of the Reactor Coolant System

15.2.12.1 Identification of Causes and Accident Description

The most severe core conditions resulting from an accidental depressurization of the Reactor Coolant System (RCS) are associated with an inadvertent opening of a pressurizer safety valve. Initially the event results in a rapidly decreasing RCS pressure until this pressure reaches a value corresponding to the hot leg saturation pressure. At that time, the pressure decrease is slowed considerably. The pressure continues to decrease, however, throughout the transient. The effect of the pressure decrease would be to decrease the neutron flux via the moderator density feedback, but the reactor control system (if in the automatic mode) functions to maintain the power essentially constant throughout the initial stage of the transient. The average coolant temperature decreases slowly, but the pressurizer level increases until the reactor trip.

The reactor will be tripped by one of the following Reactor Protection System signals:

1. Pressurizer low pressure

2. Overtemperature ΔT

This transient represents the limiting analysis for the RCS accidental depressurization and imposes the worst temperature/pressure profile onto the reactor core for Condition II events. The inadvertent opening of a pressurizer safety valve event does not establish the design basis piping load condition to be adhered for RCS piping (Reference 11).

15.2.12.2 Analysis of Effects and Consequences

Methods of Analysis

The accidental depressurization transient is analyzed by employing the detailed digital computer code LOFTRAN (Reference 4). This code is described in section 15.1.9.3. The LOFTRAN results and core limits as illustrated in Figure 15.1.3-1 are used as input to LYNXT (Reference 13) to determine the minimum DNBR of the hot channel during the transient.

In calculating the DNBR the following conservative assumptions are made:

1. Initial conditions of maximum core power and reactor coolant temperatures and minimum reactor coolant pressure resulting in the minimum initial margin to DNB (See Section 15.1).

2. A zero moderator coefficient of reactivity conservative for beginning of life operation in order to provide a conservatively low amount of negative reactivity feedback due to changes in moderator density. The spatial effect of void due to local or subcooled boiling is not considered in the analysis with respect to reactivity feedback or core power shape.

3. A high (absolute value) Doppler coefficient of reactivity such that the resultant amount of positive feedback is conservatively high in order to retard any power decrease due to moderator reactivity feedback.

4. The pressurizer safety valve capacity is assumed to be 10% greater to increase the depressurization rate.

It should also be noted that in the analysis power peaking factors are kept constant at the design values while, in fact, the core feedback effects would result in considerable flattening of the power distribution. This would significantly increase the calculated DNBR; however, no credit is taken for this effect.

Results

Figure 15.2.12-1 illustrates the nuclear power transient following the event. Reactor trip on overtemperature ΔT occurs as shown in Figure 15.2.12-1. The pressure and vessel average coolant temperature transients during the accident, including a 10% increase in capacity, are given in Figure 15.2.12-2. The resulting DNBR never goes below the safety analysis limit as shown in Figure 15.2.12-3.

15.2.12.3 Conclusions

The pressurizer low pressure and the overtemperature ΔT Reactor Protection System signals provide adequate protection against this accident, and the minimum DNBR remains greater than the safety analysis limit.

The Accidental Depressurization of the RCS event has been evaluated with respect to the CENP-Westinghouse steam generator replacement at Sequoyah Unit 1 and Unit 2. The evaluation concludes that the parameters important to the consequences of this event are not adversely affected by the RSG.

15.2.13 Accidental Depressurization of the Main Steam System

15.2.13.1 Identification of Causes and Accident Description

The most severe core conditions resulting from an accidental depressurization of the main steam system are associated with an inadvertent opening of a single steam dump, relief or safety valve. The analyses performed assuming a rupture of a main steam pipe are given in Section 15.4.

The steam release as a consequence of this accident results in an initial increase in steam flow which decreases during the accident as the steam pressure falls. The energy removal from the Reactor Coolant System (RCS) causes a reduction of coolant temperature and pressure. In the presence of a negative moderator temperature coefficient, the cooldown results in a reduction of core shutdown margin.

The analysis is performed to demonstrate that the following criterion is satisfied: Assuming a stuck rod cluster control assembly and a single failure in the Engineered Safety Features the DNB design basis will be met after reactor trip for a steam release equivalent to the spurious opening, with failure to close, of the largest of any single steam dump, relief or safety valve.

The following systems provide the necessary protection against an accidental depressurization of the main steam system.

1. Safety Injection System actuation from any of the following:

    a. Two-out-of three low steam line pressure signals in any one loop.

    b. Two-out-of three low pressurizer pressure signals.

2. The overpower reactor trips (neutron flux and ΔT) and the reactor trip occurring in conjunction with receipt of the safety injection signal.

3. Redundant isolation of the main feedwater lines: Sustained high feedwater flow would cause additional cooldown. Therefore, in addition to the normal control action which will close the main feedwater isolation valves following a reactor trip, a safety injection signal will rapidly close all main and bypass feedwater regulating valves and trip the main feedwater pumps.

15.2.13.2 Analysis of Effects and Consequences

Method of Analysis

The following analyses of a secondary system steam release are performed for this section.

1. A full plant digital computer simulation, LOFTRAN (Reference 4) code, to determine RCS temperature and pressure during cooldown.

2. An evaluation to determine that the DNB design basis is met.

The following conditions are assumed to exist at the time of a secondary system depressurization.

1. End of life shutdown margin at no load, equilibrium xenon conditions, and with the most reactive assembly stuck in its fully withdrawn position. Operation of rod cluster control assembly banks during core burnup is restricted in such a way that addition of positive reactivity in a secondary system break accident will not lead to a more adverse condition than the case analyzed.

2. A negative moderator coefficient corresponding to the end of life rodded core with the most reactive rod cluster control assembly in the fully withdrawn position. The variation of the coefficient with temperature and pressure is included. The K_{eff} versus temperature at 1000 psi corresponding to the negative moderator temperature coefficient used plus the Doppler temperature effect, is shown in Figure 15.2.13-1.

3. Minimum capability for injection of high concentration boric acid solution corresponding to the most restrictive single failure in the Safety Injection System. The injection curve assumed is shown in Figure 15.2.13-2. This corresponds to the flow delivered by one charging pump delivering its full contents to the cold leg header. Subsequent to this analysis, the minimum charging pump performance requirements were reduced from those shown in Figure 15.2.13-2. However, the flow reduction was more than offset by the minimum flow available from one safety injection pump. While not specifically modeled in the analysis, the flow from one safety injection pump is also credited in Reference 19 to establish that the results of the analysis remain conservative and bounding for the current charging pump minimum performance requirements in Figure 6.3.2-7. The analysis conservatively assumes that the safety injection lines downstream of the RWST contain no borated water (0 ppm). This water must be swept from the safety injection lines prior to the delivery of boric acid (1950 ppm) from the RWST to the reactor coolant loops.

4. The case studied is an initial total steam flow of 228 lbs/second at 1015 psia from all steam generators with offsite power available. This is the maximum capacity of any single steam dump or safety valve. Initial hot shutdown conditions at time zero are assumed since this represents the most pessimistic initial condition.

   Should the reactor be just critical or operating at power at the time of a steam release, the reactor will be tripped by the normal overpower protection when power level reaches a trip point. Following a trip at power the RCS contains more stored energy than at no load, the average coolant temperature is higher than at no load and there is appreciable energy stored in the fuel.

   Thus, the additional stored energy is removed via the cooldown caused by the steam line break before the no load conditions of RCS are reached. After the additional stored energy is removed, cooldown proceeds in the same manner as in the analysis which assumes no load condition at time zero. However, since the initial steam generator water inventory is greatest at no load, the magnitude and duration of the RCS cooldown are less for steam line breaks occurring at power.

5. In computing the steam flow the Moody Curve for fL/D = 0 is used.

6. Perfect moisture separation in the steam generator is assumed.

7. The auxiliary feedwater system provides a flow rate of 588 GPM to each steam generator. This auxiliary feedwater is not required to mitigate the transient and is modeled to increase the severity of the core cooldown.

Results

The calculated time sequence of events for this accident is listed in Table 15.2-1. The results presented are a conservative indication of the events which would occur assuming a secondary system steam release since it is postulated that all of the conditions described above occur simultaneously.

Figure 15.2.13-3 shows the transients arising as a result of a steam release having an initial steam flow of 228 lb/second at 1015 psia with steam release from one safety valve. The assumed steam release is the maximum capacity of any single steam dump or safety valve. Safety injection is initiated automatically by low pressurizer pressure. Operation of only one train of ECCS pumps is assumed. Boron solution at 1950 ppm enters the RCS providing sufficient negative reactivity to assure that the DNB design basis is met.

The transient is quite conservative with respect to cooldown, since no credit is taken for the energy stored in the system metal other than that of the fuel elements or energy stored in the other steam generators. Since the transient occurs over a period of about 5 minutes, the neglected stored energy is likely to have a significant effect in slowing the cooldown.

15.2.13.3 Conclusions

The analysis has shown that the criteria stated earlier in this section is satisfied. Since the minimum DNBR remains above the limiting value, no consequential damage to the core or reactor system occurs.

The Accidental Depressurization of the Steamline event has been evaluated with respect to the CENP-Westinghouse steam generator replacement at Sequoyah Unit 1 and Unit 2. The evaluation concludes that the parameters important to the consequences of this event are not adversely affected by the RSG.

15.2.14 Spurious Operation of the Safety Injection System at Power

15.2.14.1 Identification of Causes and Accidents Descriptions

NOTE: The BIT terminology will be used here since this analysis of record includes the Boron Injection Tank (now the Centrifugal Charging Pump Injection Tank) and provides bounding results.

Spurious SIS operation at power could be caused by operator error or a false electrical actuating signal. A spurious signal in any of the following channels could cause this incident.

1. High containment pressure

2. Low pressurizer pressure

3. Low steam line pressure

Following the actuation signal, the suction of the centrifugal charging pumps is diverted from the volume control tank to the refueling water storage tank. The valves isolating the injection tank from the charging pumps and the injection header then automatically open. The charging pumps then provide RWST water through the header and injection line and into the cold legs of each loop. The safety injection pumps also start automatically but provide no flow when the RCS is at normal pressure. The passive injection system and the low head system also provide no flow at normal RCS pressure.

An SIS signal normally results in a reactor trip followed by a turbine trip. However, it cannot be assumed that any single fault that actuates the SIS will also produce a reactor trip. Therefore, two different courses of events are considered.

Case A Trip occurs at the same time spurious injection starts

Case B The reactor protection system produces a trip later in the transient.

For Case A the operator would stop safety injection and bring the plant to hot standby conditions. If the safety injection system must be disabled for repair, boration should continue through the normal boration mode and the plant brought to cold shutdown.

For Case B the reactor protection system does not produce an immediate trip and the reactor experiences a negative reactivity excursion causing a decrease in reactor power. The power unbalance causes a drop in T_{avg} and consequent coolant shrinkage. The pressurizer pressure and level drop. Load will decrease due to the effect of reduced steam pressure on load after the electro-hydraulic governor fully opens the turbine throttle valve. If automatic rod control is used, these effects will be lessened until the rods have moved out of the core. The transient is eventually terminated by the reactor protection system low pressure trip or by manual trip.

The time to trip is affected by initial operating conditions including core burnup history which affects initial boron concentration, rate of change of boron concentration, Doppler and moderator coefficients.

Recovery from this incident for case B is made in the same manner described for case A. The only difference is the lower T_{avg} and pressure associated with the power unbalance during the transient. The time at which reactor trip occurs is of no concern for this accident. At lower loads coolant contraction will be slower, resulting in a longer time to trip.

Reference 17 addresses a PWR transient condition where a spurious safety injection signal with an immediate reactor trip could challenge the non-escalation criteria. A spurious safety injection signal, a Condition II event, can become a Condition III event (Small Break LOCA), if the resulting safety injection flow fills the pressurizer and a pressurizer relief or safety valve opens, discharges water, and then fails to close. This condition can be precluded if operator actions to terminate safety injection flow can be completed before the pressurizer becomes water solid or the pressurizer relief and safety valves are fully qualified to close following a water discharge.

15.2.14.2 Analysis of Effects and Consequences

Method of Analysis

The spurious operation of the SIS system is analyzed by employing the detailed digital computer program LOFTRAN (Reference 4) and LYNXT (Reference 13). These codes are described in section 15.1.9.3 and 15.1.9.11, respectively.

Because of the power and temperature reduction during the transient, operating conditions do not approach the core limits. Analysis of several cases shows the results are relatively independent of time to trip.

A transient is presented representing conditions at beginning of core life. Results at end of life are similar except that moderator feedback effects result in a slower transient.

The assumptions are:

1. Initial Operating Conditions - the initial reactor power and Reactor Coolant System temperatures are assumed at their maximum values consistent with the steady state full power operation including allowances for calibration and instrument errors.

2. Moderator and Doppler Coefficients of Reactivity - A low beginning of life moderator temperature coefficient was used. A low absolute value Doppler power coefficient was assumed.

3. Reactor Control - The reactor was assumed to be in manual control.

4. Pressurizer Heaters - Pressurizer heaters were assumed to be nonoperable in order to increase the rate of pressure drop.

5. Injection - At time zero, two charging pumps inject 20,000 ppm borated water from the BIT and 1950 ppm of borated water from the RWST water into the cold legs of each loop. Even though the BIT is functionally removed, Westinghouse analysis conservatively assumes that the BIT is still intact. This assumption lends to a larger power mismatch with subsequent RCS cooling and inventory shrinkage.

6. Turbine Load - Turbine load was assumed constant until the electro- hydraulic governor drives the throttle valve wide open. Then turbine load drops as steam pressure drops.

7. Reactor Trip - Reactor Trip was initiated by low pressurizer pressure assumed at a conservatively low value of 1775 psia.

To address the pressurizer overfill transient in Reference 17, a calculation of the pressurizer fill time for the spurious safety injection transient was performed using a Sequoyah plant specific evaluation model developed with the RELAP5/MOD2-B&W computer code. The calculation was based on a number of best-estimates assumptions and input parameters to provide a realistic pressurizer fill time for the transient condition (see Reference 18).

Results

The transient response is shown in Figures 15.2.14-1 and 15.2.14- 2. Nuclear power starts decreasing immediately due to boron injection but steam flow does not decrease until 15 seconds into the transient when the turbine throttle valve goes wide open. The mismatch between load and nuclear power causes T_{avg}, pressurizer water level, and pressurizer pressure to drop. The low pressure trip set point is reached at 64 seconds and rods start moving into the core at 66 seconds.

After trip, pressures and temperatures slowly rise since the turbine is tripped and the reactor is producing some power due to delayed neutron fissions and decay heat. The time sequence of events during this transient is shown in Table 15.2-1.

The time required to fill the pressurizer was demonstrated to exceed the required operator action time of 15 minutes to terminate safety injection flow (see Reference 18).

15.2.14.3 Conclusions

Results of the analysis show that spurious safety injection with or without immediate reactor trip presents no hazard to the integrity of the Reactor Coolant System.

DNB ratio is never less than the initial value. Thus there will be no cladding damage and no release of fission products to the reactor coolant system.

If the reactor does not trip immediately, the low pressure reactor trip will be actuated. This trips the turbine and prevents excess cooldown thereby expediting recovery from the incident.

The degradation of a spurious safety injection event to a SBLOCA is precluded for Sequoyah since the time required to fill the pressurizer during the event is greater than the maximum 15 minute operator action time required to terminate the transient (see Reference 18).

The Spurious Operation of the Safety Injection at Power event has been evaluated with respect to the CENP-Westinghouse steam generator replacement at Sequoyah Unit 1and Unit 2. The evaluation concludes that the parameters important to the consequences of this event are not adversely affected by the RSG.

15.2.15 References

1. W. C. Gangloff, "An Evaluation of Anticipated Operational Transients in Westinghouse Pressurized Water Reactors," WCAP-7486, May 1971.

2. D. H. Risher, Jr., R. F. Barry, "TWINKLE - A Multi-Dimensional Neutron Kinetics Computer Code," WCAP-7979-P-A (Proprietary), WCAP-8028-A (Non-Proprietary), January 1975.

3. Hargrove, H. G., "FACTRAN - A Fortran IV Code for Thermal Transients in a UO_2 Fuel Rod," WCAP-7908-A, December 1989.

4. Burnett, T. W. T., et al., "LOFTRAN Code Description," WCAP-7907-P-A (Proprietary), WCAP-7907-A (Non-Proprietary), April 1984.

5. Morita, T., et. al., "Dropped Rod Methodology for Negative Flux Rate Trip Plant," WCAP-10297-P-A (Proprietary) and WCAP-10298-A (Non-Proprietary), June 1983.

6. F. M. Bordelon, "Calculation of Flow Coastdown After Loss of Reactor Coolant Pump (PHOENIX Code)," WCAP-7969, September 1972.

7. J. M. Geets, "MARVEL - A Digital Computer Code For Transient Analysis of a Multiloop PWR System," WCAP-7909, June 1972.

8. M. A. Mangan, "Overpressure Protection For Westinghouse Pressurized Water Reactors," WCAP-7769, October 1971.

9. "American National Standard for Decay Heat Power in Light Water Reactors," ANSI/ANS-S.1-1979, August 1979.

10. "Power Distribution Control and Load Following Procedures," WCAP-8403, September 1974.

11. DIM-SQN-DC-V-27.4-21 (B38 940506 800).

12. BAW-10164PA, R06, "RELAP5/MOD2-B&W- An Advanced Program for Light Water Reactor LOCA and Non-LOCA Transients Analysis," June 2007.

13. BAW-10156, R01, "LYNXT-Core Transient Thermal Hydraulic Program," August 1993.

14. BAW-10170, "Statistical Core Design for Mixing Vane Cores," December 1988.

15. Document No. 77-5016198, “Framatome ANP, Replacement Steam Generator Report for Sequoyah Unit 1.”

16. BAW-10180, “NEMO - Nodal Expansion Method Optimized,” March 1993.

17. NRC Regulatory Issue Summary 2005-29, Anticipated Transients that Could Develop into More Serious Events.

18. SQN-APS2-139, Time for the Pressurizer to Become Water Solid During a Spurious SI at Power Event.

19. Document No. 51-9076350-000, “SQN Non-LOCA Disposition of Events for ECCS Flow Modification.”

20. Document No. 77-9142036, AREVA NP, “Replacement Steam Generator Report for TVA Sequoyah Unit 2.”

TABLE 15.2-1 (Sheet 1)

TIME SEQUENCE OF EVENTS FOR
CONDITION II EVENTS

Accident	Event	Time (Sec.)
Uncontrolled RCCA Withdrawal from a Subcritical Condition	Initiation of uncontrolled rod withdrawal	0
	Power range high neutron flux low setpoint reached	13.4
	Peak nuclear power occurs	13.7
	Rods begin to fall into core	13.9
	Minimum DNBR Occurs	
	for Mark-BW	15.9
	for Advanced W17 HTP	15.9
	Peak heat flux occurs	15.8
	Peak average fuel temperature occurs	16.1
Uncontrolled RCCA Withdrawal at Power	Initiation of uncontrolled RCCA withdrawal at a large reactivity insertion rate (75 pcm/sec) with maximum reactivity feedback Advanced W17 HTP Fuel (Transition Cores)	0
1. Case A	Power range high neutron flux high trip point reached	0.9
	Rods begin to fall into core	1.4
	Minimum DNBR occurs	2.4
2. Case B	Initiation of uncontrolled RCCA withdrawal at a small reactivity insertion rate (0.005 pcm/sec) with minimum reactivity feedback Advanced W17 HTP Fuel (Transition Cores)	0
	Over temperature ΔT reactor trip signal initiated	263.0
	Rods begin to fall into core	263.7
	Minimum DNBR occurs	264.1

TABLE 15.2-1 (Sheet 1) continued

TIME SEQUENCE OF EVENTS FOR
CONDITION II EVENTS

Accident	Event	Time (Sec.)
3. Case C	Initiation of uncontrolled RCCA withdrawal at a large reactivity insertion rate (7 pcm/sec) with maximum reactivity feedback Advanced W17 HTP Fuel (Full Core)	0.0
	Power range high neutron flux high trip point reached	65.5
	Rods begin to fall into the core	66.0
	MDNBR occurs	66.0
4. Case D	Initiation of uncontrolled RCCA withdrawal at a small reactivity insertion rate (0.1 pcm/sec) with minimum reactivity feedback Advanced W17 HTP Fuel (Full Core)	0.0
	Power range high neutron flux high trip point reached	112.8
	Rods begin to fall into the core	113.3
	MDNBR occurs	113.3

TABLE 15.2-1 (Sheet 2)

TIME SEQUENCE OF EVENTS FOR
CONDITION II EVENTS

Accident	Event	Time (Sec.)
Uncontrolled Boron Dilution		
1. Dilution during refueling and startup	Dilution begins	0
	Operator isolates source of dilution; minimum margin to criticality occurs	refueling - precluded by admin controls) startup - >1140
2. Dilution During Full Power Operation		
a. Automatic Reactor Control	Shutdown margins lost	2520
b. Manual Reactor Control	Dilution begins	0
	Reactor trip setpoint reached for over temperature ΔT	<120
	Shutdown margin is lost (if dilution continued after trip)	>2400
3. Dilution Following Shutdown (Equilibrium Xe Case)		
	Reactor Trip	0
	Reactor Power = 7.5% of nominal 80 sec. reactor period - Intermediate NIS reads ~10% power	10
	Source Range NIS Available	930
	Source Range NIS no longer decreasing (without dilution event, flux would stabilize at this point- an 18 day half life decay of	

TABLE 15.2-1 (Sheet 3)

TIME SEQUENCE OF EVENTS FOR
CONDITION II EVENTS

Accident	Event	Time (Sec.)
	flux would be normal - Source Range Count Rate would change from 200 cps to 197 cps).	1,250
	High Flux at Shutdown Alarm nominally 3 times stabilized flux level. For this example, the value is » 700 cps.	1,250
	High pressurizer Level Trip and Alarm	1,800
	Source Range High Flux at Shutdown Alarm	7,400
	Keff = 1.0	12,960
4. Dilution Following Shutdown (BOL Clean Case)		
	Reactor Trip	0
	Source Range NIS available and no longer decreasing count rate. Operator need not reset count rate since refueling/previous shutdown value conservative	60
	High Pressurizer Level Trip and Alarm	1,800
	Source Range High Flux at Shutdown Alarm	3,500
	Keff = 1.0	5,220
Partial Loss of Forced Reactor Coolant Flow		
All loops operating, two pumps coasting down	Coastdown begins	0
	Low flow reactor trip	1.4
	Rods begin to drop	2.4
	Minimum DNBR occurs	
	for Mark-BW	4.5
	for Advanced W17 HTP	4.6

TABLE 15.2-1 (Sheet 4)

TIME SEQUENCE OF EVENTS FOR CONDITION II EVENTS

Accident	Event	Time (Sec.)
Startup of an Inactive Reactor Coolant Loop	Initiation of pump startup	0
	Power reaches P-8 trip setpoint	2.79
	Rods begin to drop	3.29
	Minimum DNBR occurs	4.0
Loss of External Electrical Load Without Pressurizer Control	Loss of electrical load	0
	High pressurizer pressure reactor trip set point reached	5.1
	Rods begin to drop	7.1
	Minimum DNBR occurs	
	for Mark-BW	8.2
	for Advanced W17 HTP	8.3
	Peak primary pressure reached	9.8
	Main steam safety valves lift	10.4
	Peak secondary pressure reached	16.0
Loss of External Electrical Load with Pressurizer Control	Loss of external electrical load	0
	Uncompensated PORV lift	3.5
	MSSVs begin to lift	6.8
	Compensate PORV lift	7.5
	Overtemperature ΔT trip setpoint reached	14.6
	Rods begin to drop	15.3
	Minimum DNBR occurs (Advanced W17 HTP)	15.8
	Peak secondary system pressure occurs	20.9

TABLE 15.2-1 (Sheet 5)

TIME SEQUENCE OF EVENTS FOR CONDITION II EVENTS

Accident	Event	Time (Sec.)
Loss of Normal Feedwater	Main feedwater flow stopped	0.0
	Low-Low steam generator water level trip-setpoint reached	8.6
	Rods begin to drop	10.6
	Peak water level in the pressurizer occurs	14.6
	Two steam generators begin to receive auxiliary feedwater from one motor-driven auxiliary feedwater pump	70.7
	Cold auxiliary feedwater is delivered to the steam generators	507.7
	Core decay heat plus pump heat decreases to auxiliary feedwater heat removal capacity	~6240

TABLE 15.2-1 (Sheet 6)

TIME SEQUENCE OF EVENTS FOR
CONDITION II EVENTS

Accident	Event	Time (Sec.)
Loss of Off-Site Power to the Station Auxiliaries	Main feedwater flow stopped	10.01
	Low-Low steam generator water level trip setpoint reached	53.83
	Rods begin to drop	55.84
	Power lost to the reactor coolant pumps	55.84
	Two steam generators begin to receive auxiliary feedwater from one motor-driven auxiliary feed-water pump	113.85
	Cold auxiliary feedwater is delivered to the steam generators	550.85
	Core decay heat decreases to auxiliary feedwater heat removal capacity	1448
	Peak water level in pressurizer occurs	3000.

TABLE 15.2-1 (Sheet 7)

TIME SEQUENCE OF EVENTS FOR CONDITION II EVENTS

Accident	Event	Time (Sec)
Excessive Feedwater at Full Load in One Steam Generator - Digital Feedwater Control	All main feedwater regulator valves and all regulating bypass valves in a single loop fail fully open	0
	High-High steam generator water level signal generated	37.39
	Turbine trip occurs due to High-High steam generator water level	39.90
	Minimum DNBR occurs	
	for Mark-BW	40.5
	for Advanced W17 HTP	40.4
	Reactor trip occurs due to turbine Trip	40.91
	Feedwater isolation valves fully closed	52.91
Excessive Load Increase		
1. Manual Reactor Control (BOL)	Turbine control valves open	0.0
	Minimum DNBR occurs	
	for Mark-BW	6.0
	for Advanced W17 HTP	4.5
	Equilibrium conditions reached (approximate time only)	234.0
2. Manual Reactor Control (EOL)	Turbine control valves open	0.0
	Minimum DNBR occurs	
	for Mark-BW	93.5
	for Advanced W17 HTP	200.0
	Equilibrium conditions reached (approximate time only)	240.0
3. Automatic Reactor Control (BOL)	Turbine control valves open	0.0
	Minimum DNBR occurs	
	for Mark-BW	202.2
	for Advanced W17 HTP	240.5
	Equilibrium conditions reached (approximate time only)	313.0
4. Automatic Reactor Control (EOL)	Turbine control valves open	0.0
	Minimum DNBR occurs	
	for Mark-BW	368.0
	for Advanced W17 HTP	361.5
	Equilibrium conditions reached (approximate time only)	350.0

TABLE 15.2-1 (Sheet 8)

TIME SEQUENCE OF EVENTS FOR
CONDITION II EVENTS

Accident	Event	Time (Sec.)
	Accidental depressurization of the Reactor Coolant System	Inadvertent
	Opening of one RCS Safety Valve	0
	Reactor Trip on Overtemperature ΔT	33.8
	Rods begin to drop	35.3
	Minimum DNBR occurs	
	for Mark-BW	35.8
	for Advanced W17 HTP	39.1
Accidental depressurization of the Main Steam System	Inadvertent Opening of one main steam safety or relief valve	0
	Pressurizer empties	161
	Boron reaches core	227
	Criticality attained	305
Inadvertent Operation of ECCS during Power Operation	Charging pumps begin injecting borated water	0
	Low pressure trip point reached	64
	Rods begin to drop	66

TABLE 15.2.7-1

INITIAL CONDITIONS FOR A COMPLETE LOSS OF LOAD FROM 52% POWER*

	52% POWER
Core Power, Mwt	1780
Thermal Design Flow (TOTAL) GPM	354000
Reactor Coolant Temperature	
Vessel Outlet, °F	587
Vessel Inlet, °F	551
Steam Generator Steam	
Temperature, °F	542
Pressure, PSIA	977

*This power is based on 3423 MW, NSSS thermal power output and includes thermal power generated by the RCPs.

TABLE 15.2.7-2

TIME SEQUENCE OF EVENTS FOR A TURBINE TRIP
AT 52% POWER WITH PRESSURIZER PRESSURE CONTROL

	EVENT	Time (sec.)
1. Minimum Feedback (BOL)		
	Turbine Trip	0
	Initiation of steam release from steam generator safety valves	11
	Peak pressurizer pressure occurs	12
	Fast bus transfer failure, flow coast-down begins	30
	Low flow reactor trip occurs and rods begin to fall	33
2. Maximum Feedback (EOL)		
	Turbine Trip	0
	Initiation of steam release from stream generator safety valves	11
	Peak pressurizer pressure occurs	12
	Fast bus transfer failure, flow coastdown begins	30
	Low flow reactor trip occurs and rods begin to fall	33

TABLE 15.2.7-3

TIME SEQUENCE OF EVENTS FOR A TURBINE TRIP AT 52% POWER WITHOUT PRESSURIZER PRESSURE CONTROL

EVENT	Time (sec.)
1. Minimum Feedback (BOL)	
Turbine Trip	0
Initiation of steam release from steam generator safety valves	11
High pressurizer pressure trip occurs, and rods begin to fall	12.4
Peak pressurizer occurs	14
Fast bus transfer failure, flow coastdown begins	30
2. Maximum Feedback (EOL)	
Turbine Trip	0
Initiation of steam release from steam generator safety valves	11
High pressurizer pressure trip occurs, and rods begin to fall	13
Peak pressurizer pressure occurs	15.5
Fast bus transfer failure, flow coastdown begins	30

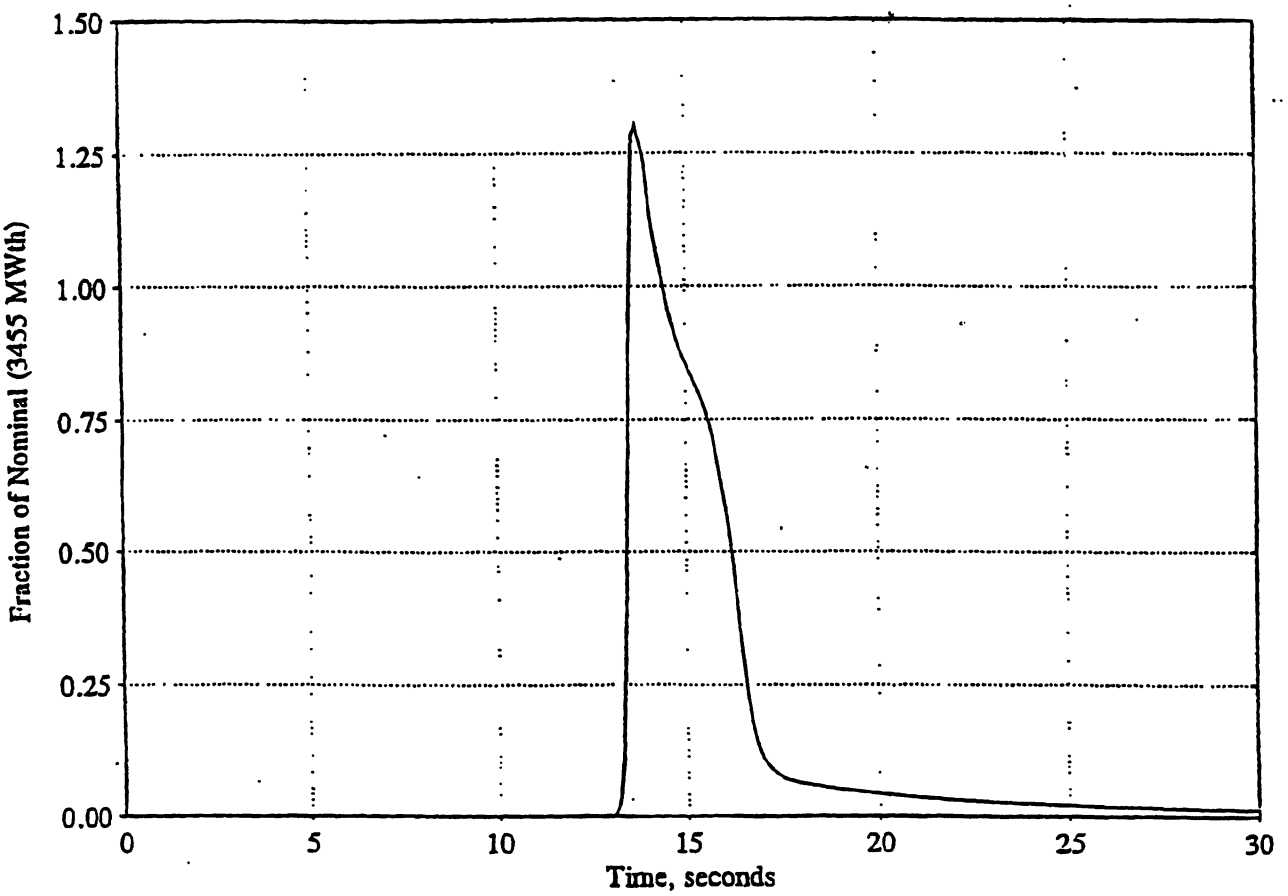

Figure 15.2.1-1 RCCA Withdrawal from Subcritical - Nuclear Power

Figure 15.2.1-2a

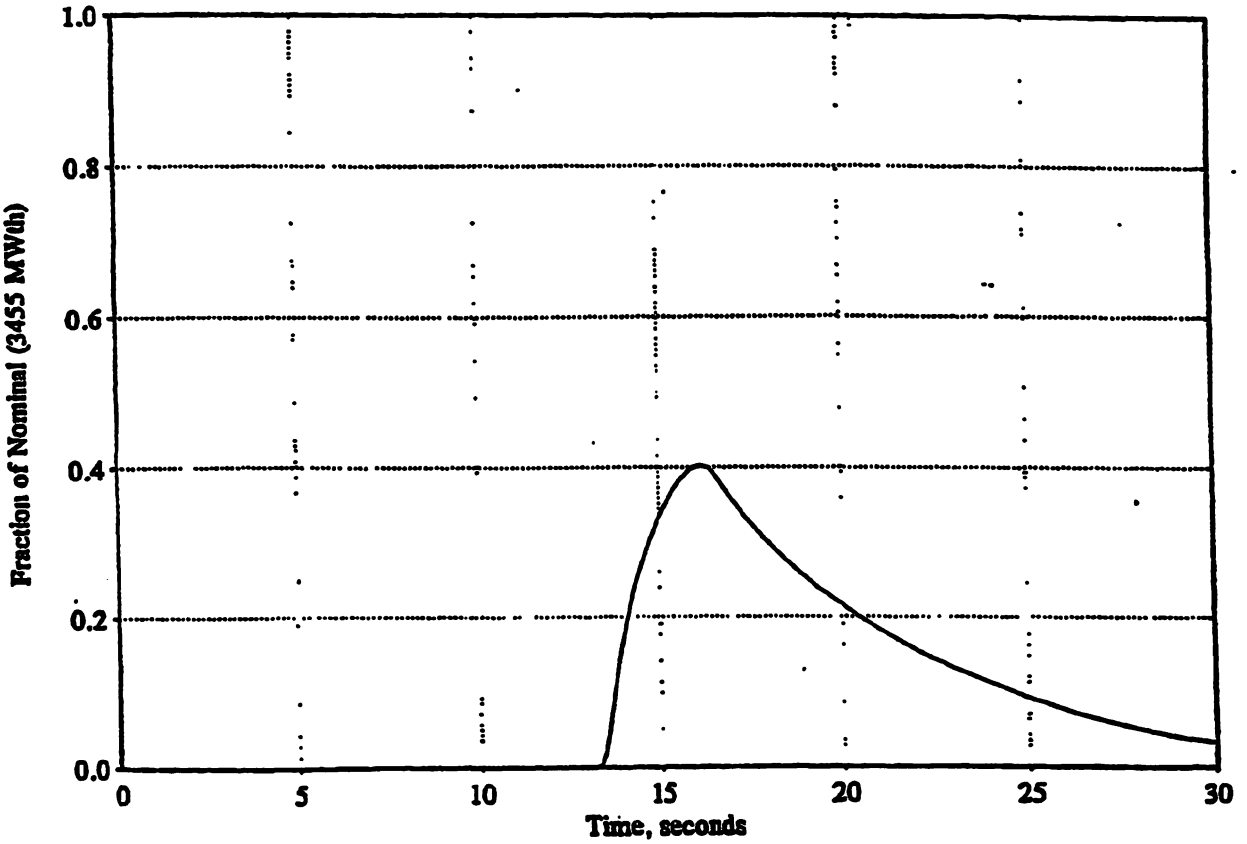

RCCA Withdrawl from Subcritical - Thermal Power - Mark-BW Fuel

SQN-24

Figure 15.2.1-2b

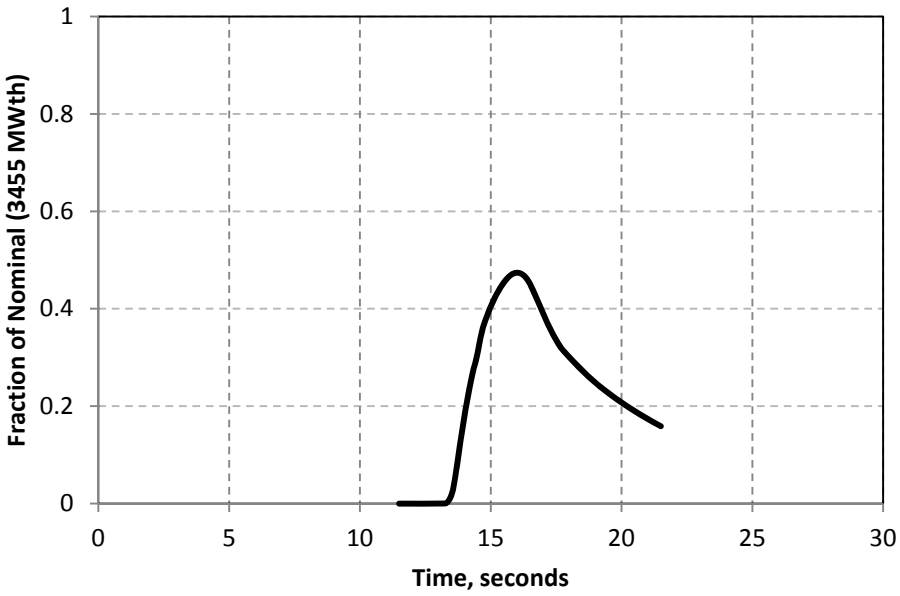

RCCA Withdrawal from Subcritical – Thermal Power – Advanced W17 HTP Fuel

SQN-26

Figure 15.2.1-3a

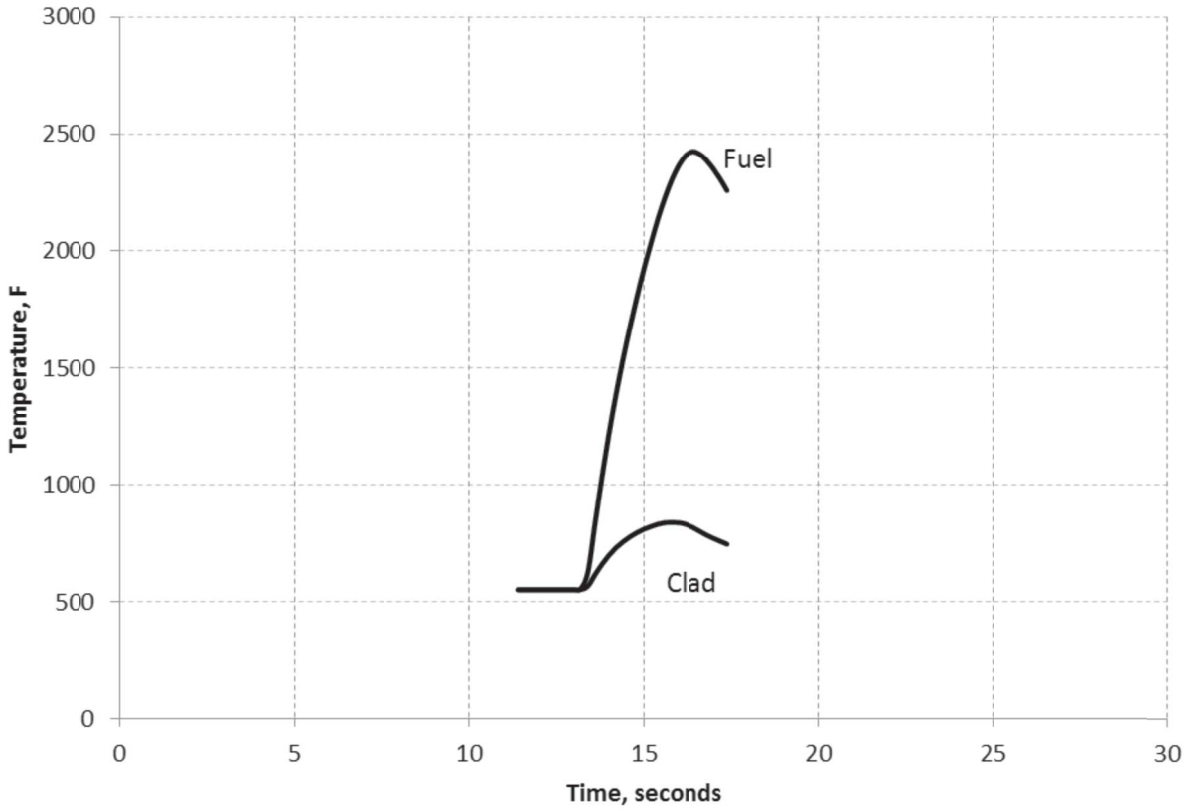

RCCA Withdrawal from Subcritical – Fuel/Clad Temperature

Mark – BW Fuel

SQN-26

Figure 15.2.1-3b

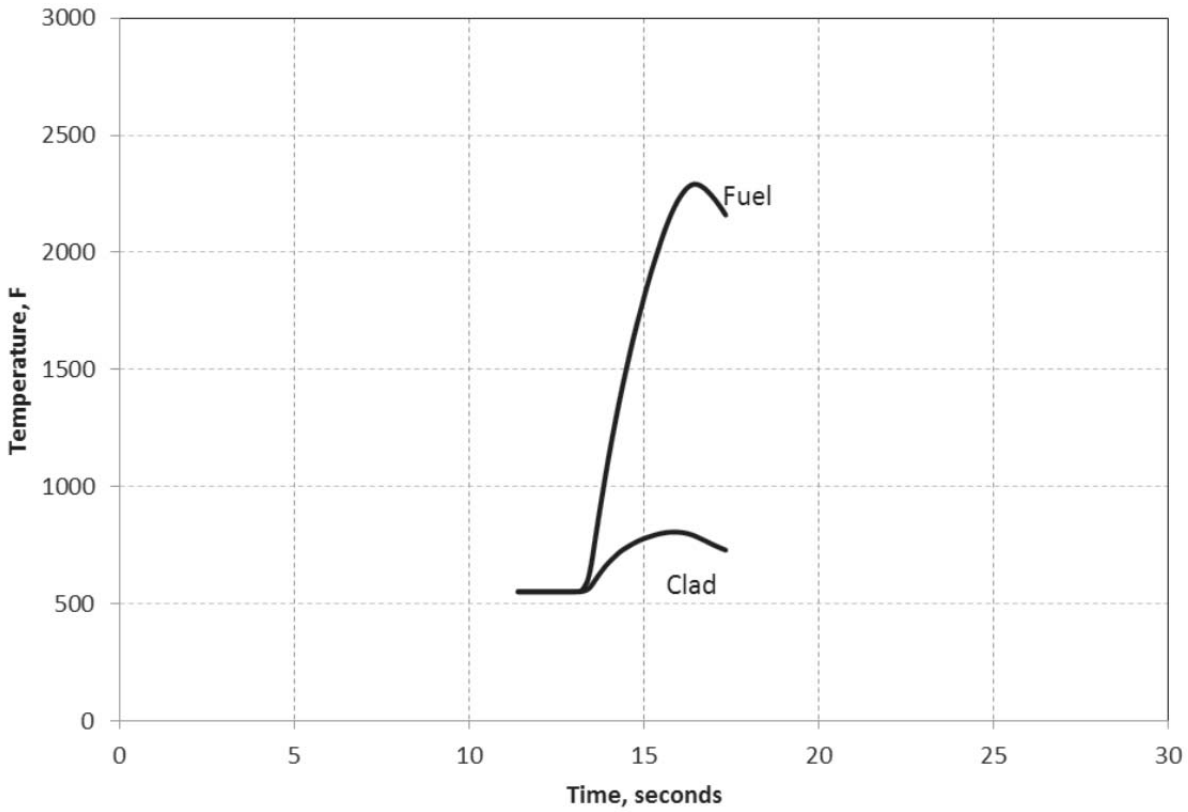

RCCA Withdrawal from Subcritical – Fuel/Clad Temperature – Advanced W17 HTP Fuel (Transition Cores)

Figure 15.2.1-3c

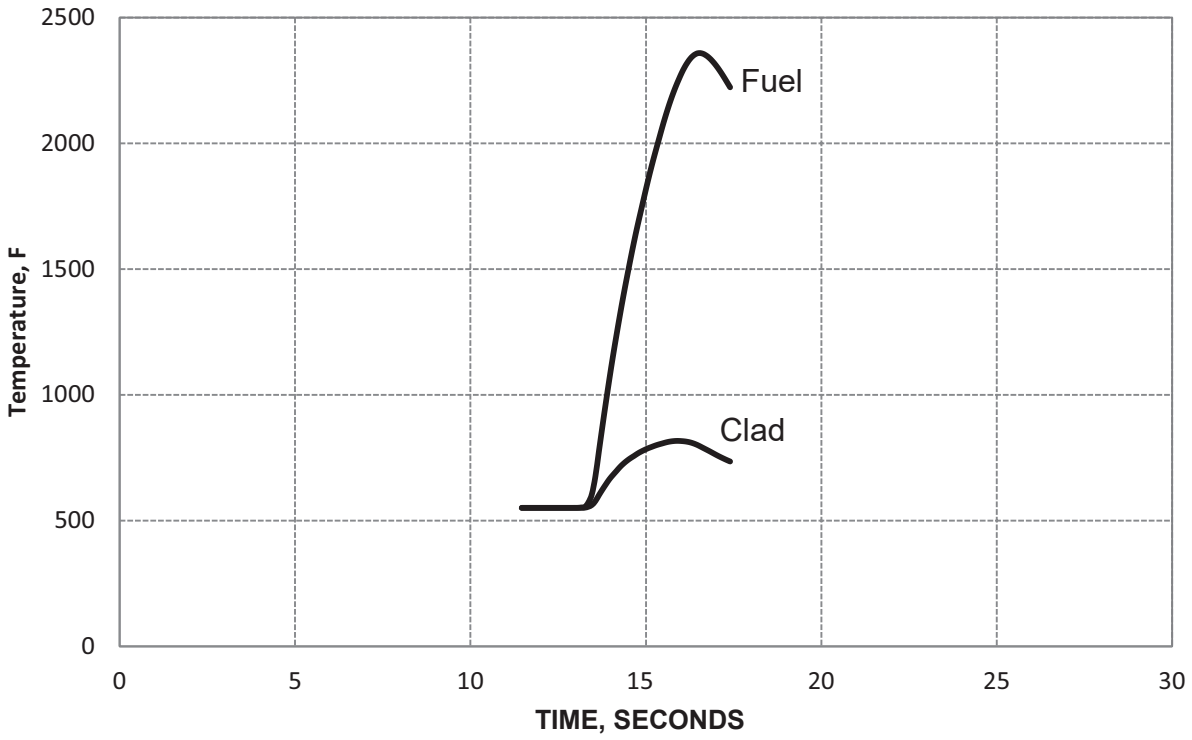

RCCA Withdrawal from Subcritical – Fuel/Clad Temperature – Advanced W17 HTP Fuel (Full Core)

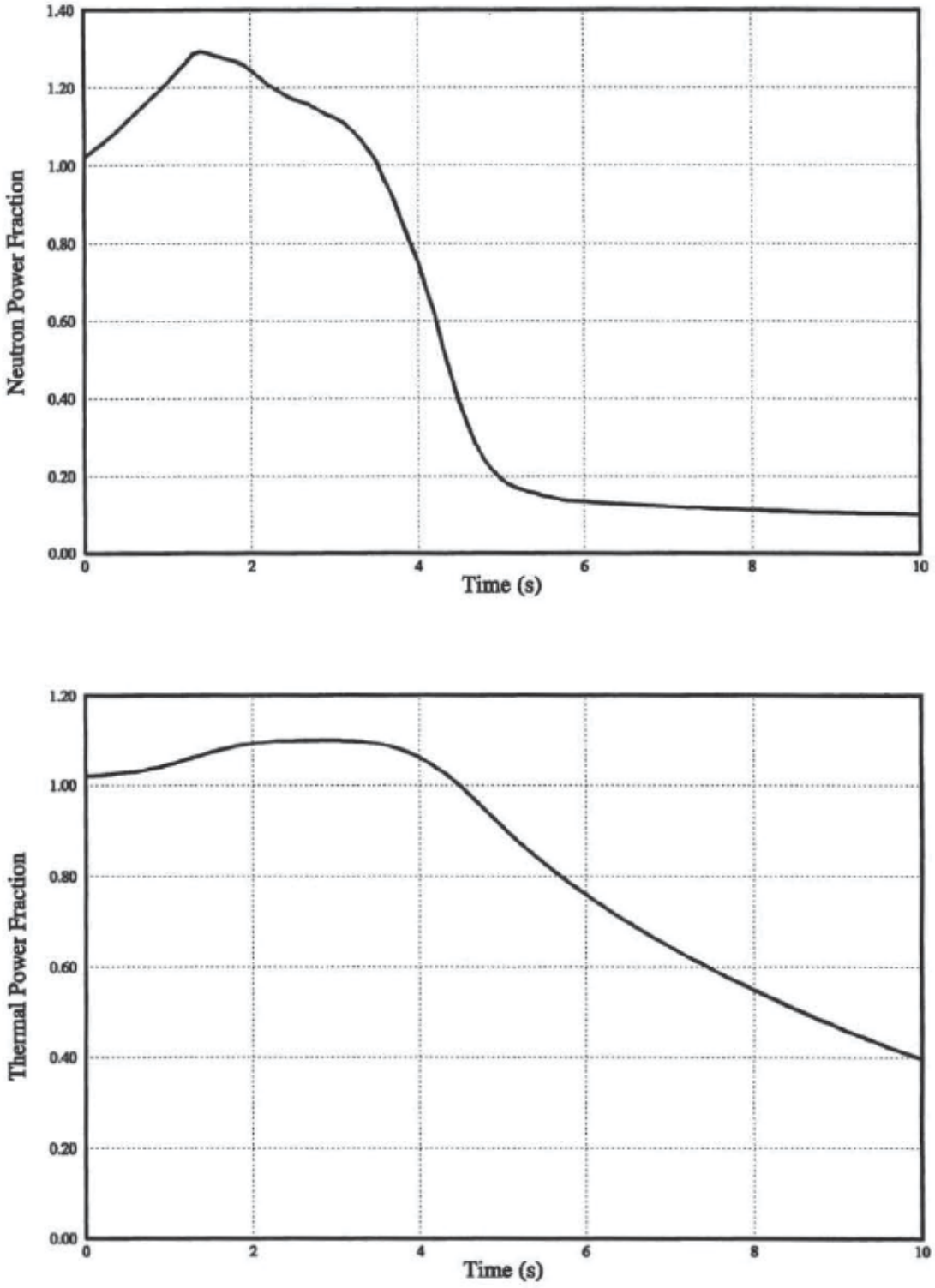

Figure 15.2.2-1a
Uncontrolled Fast Rod Withdrawal from 100% Power with Maximum Reactivity Feedback Neutron Power, Thermal Power vs Time - Advanced W17 HTP Fuel (Transition Cores)

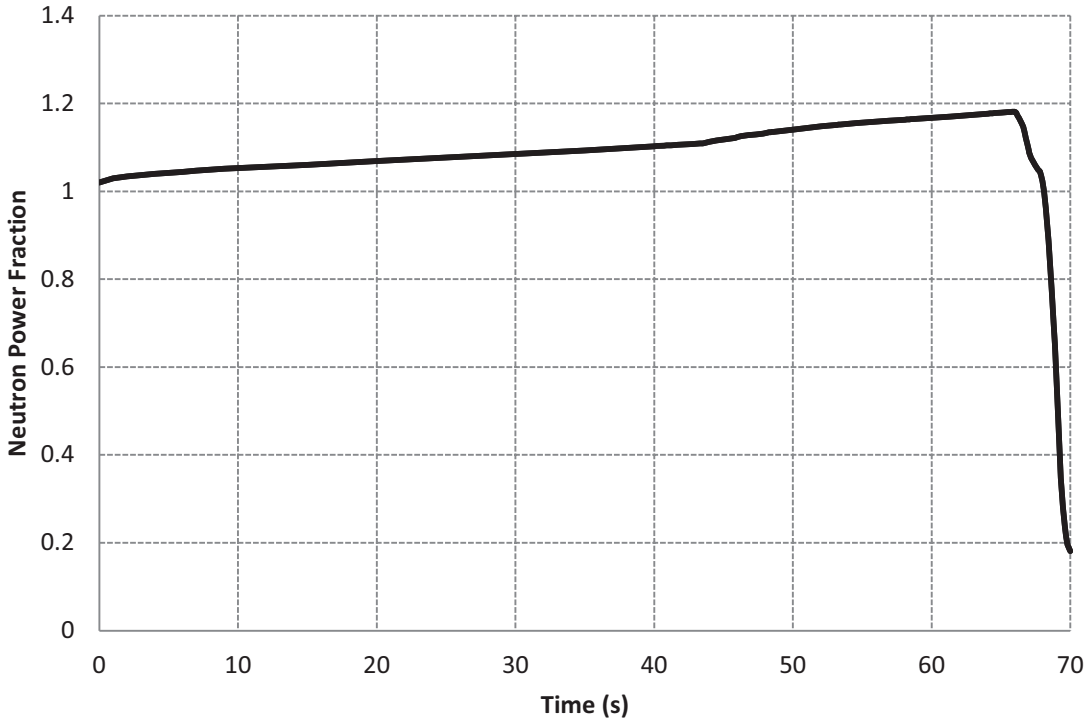

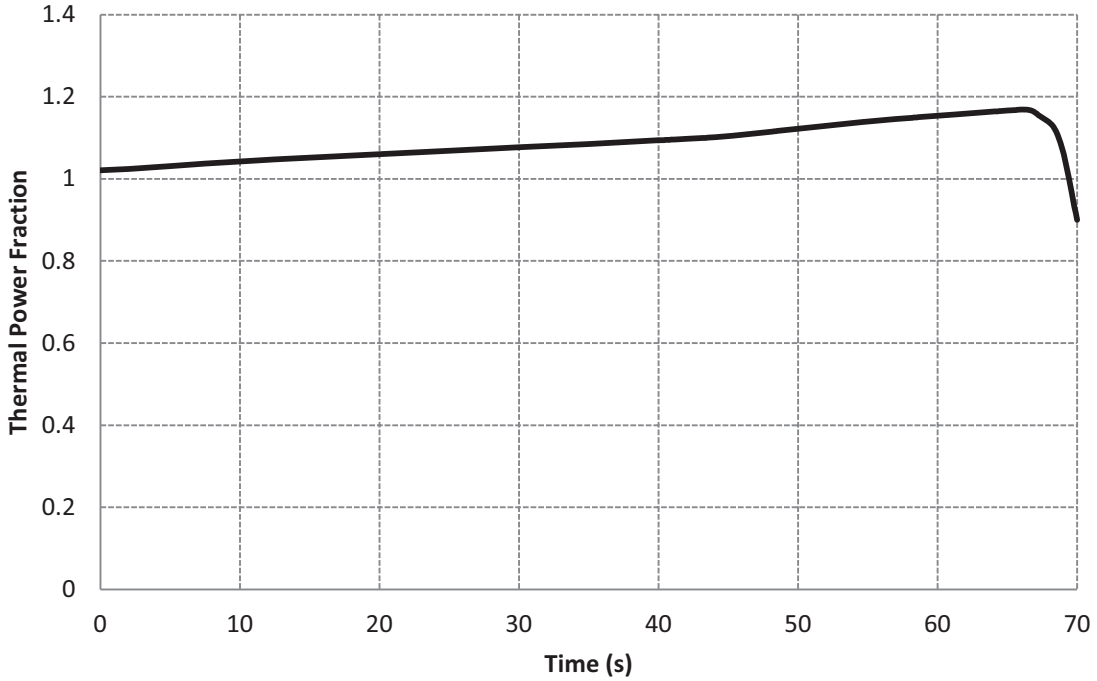

Figure 15.2.2-1b
Uncontrolled Fast Rod Withdrawal from 100% Power with Maximum Reactivity Feedback Neutron Power, Thermal Power vs Time - Advanced W17 HTP Fuel (Full Core)

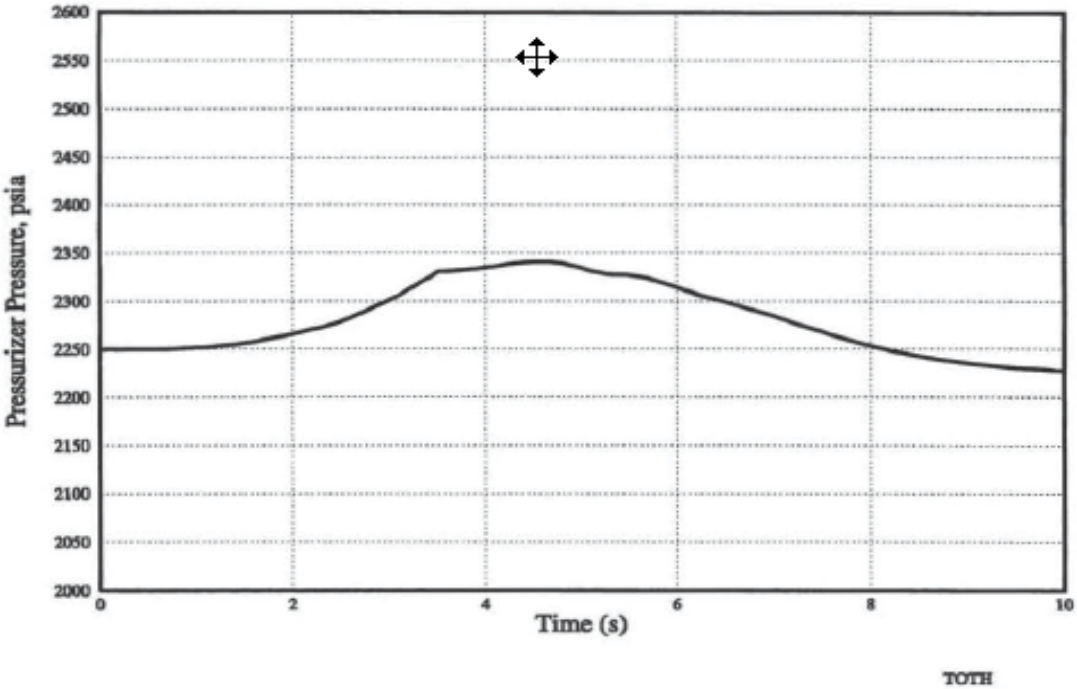

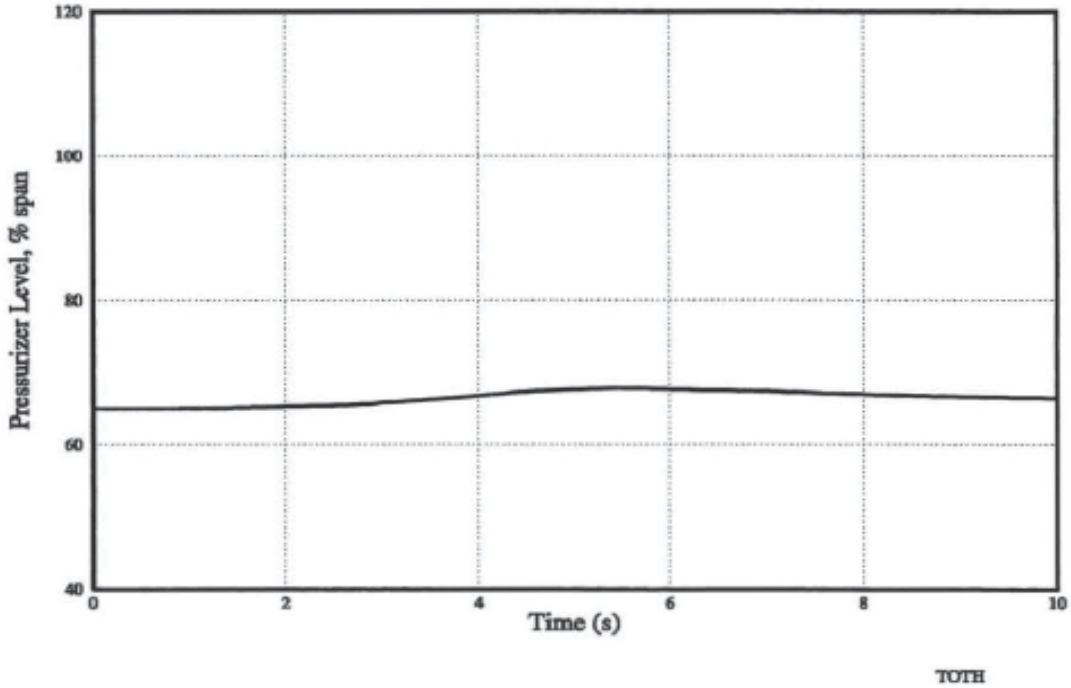

Figure 15.2.2-2a
Uncontrolled Fast Rod Withdrawal From 100% Power with Maximum Reactivity Feedback
Pressurizer Pressure, Pressurizer Water Level vs Time - Advanced W17 HTP Fuel
(Transition Cores)

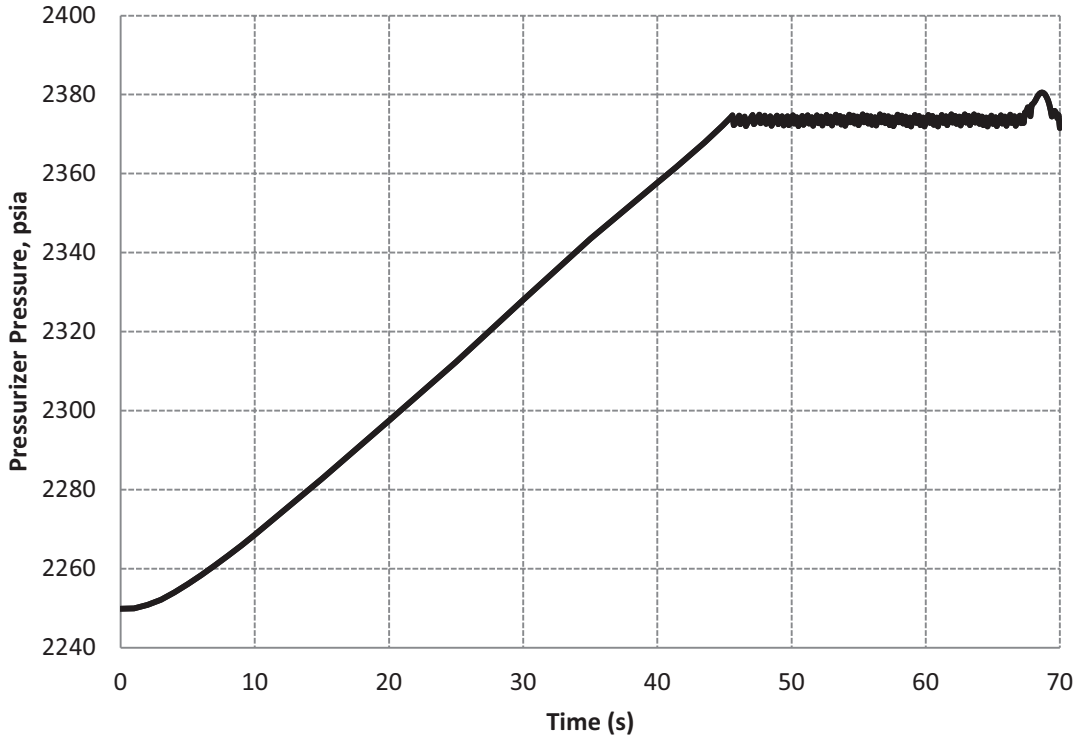

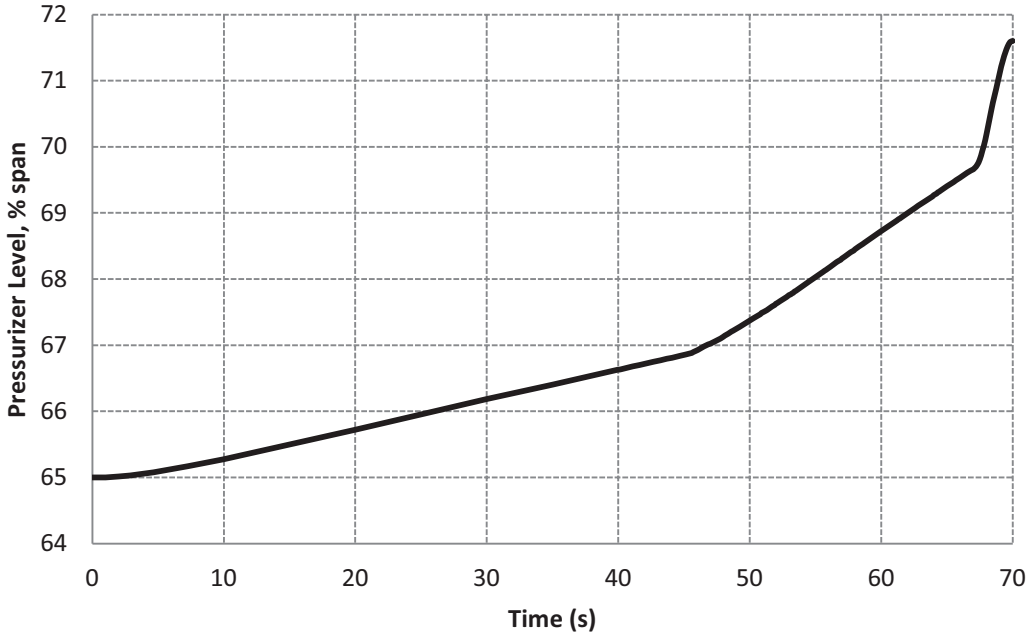

Figure 15.2.2-2b
Uncontrolled Fast Rod Withdrawal from 100% Power with Maximum Reactivity Feedback
Pressurizer Pressure, Pressurizer Water Level vs Time - Advanced W17 HTP Fuel
(Full Core)

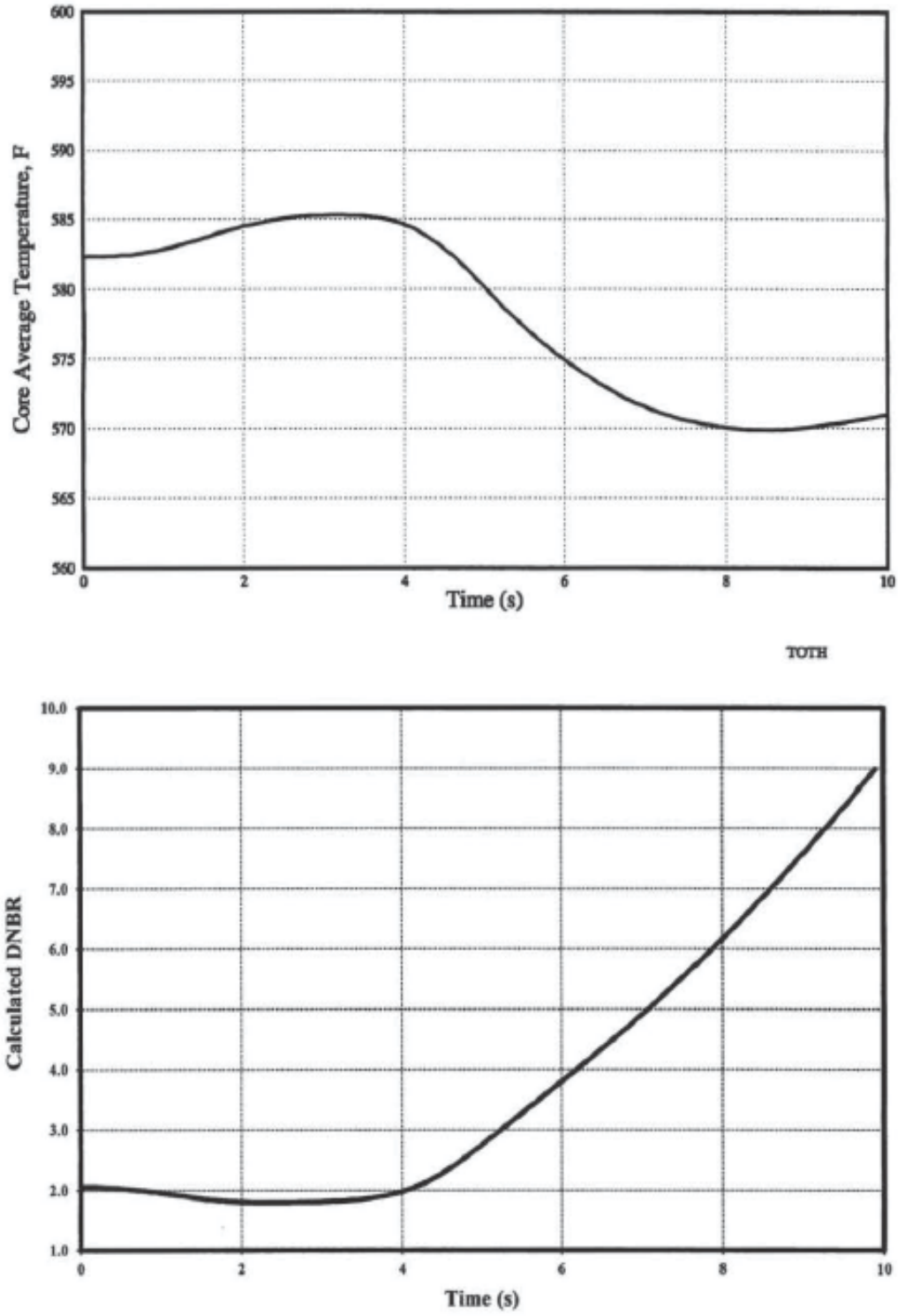

Figure 15.2.2-3a
Uncontrolled Fast Rod Withdrawal From 100% Power with Maximum Reactivity Feedback Core Average Temperature, DNBR vs Time - Advanced W17 HTP Fuel (Transition Cores)

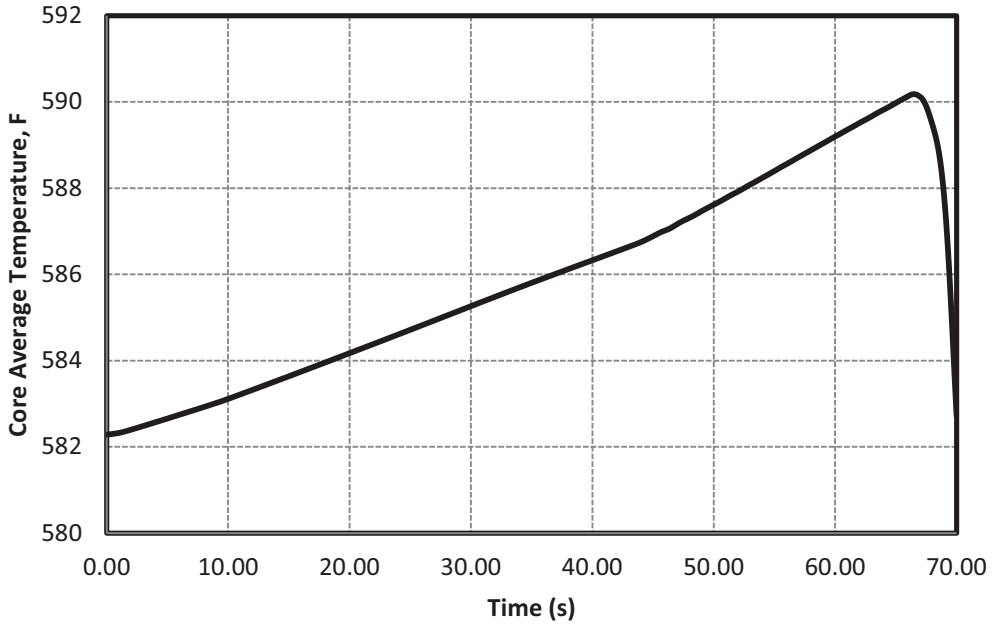

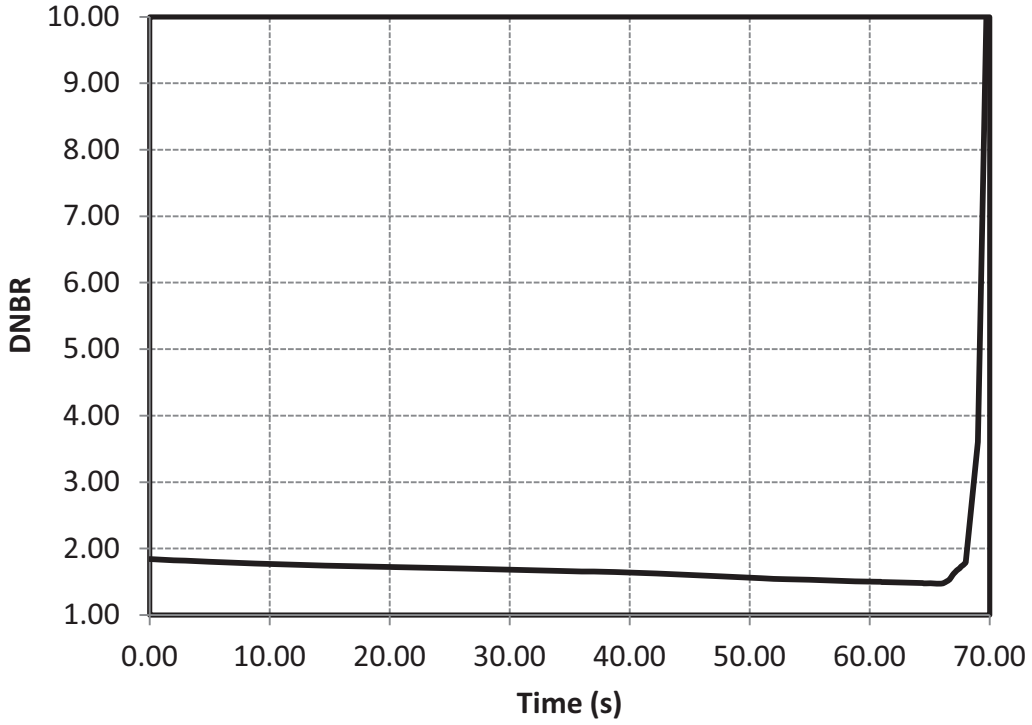

Figure 15.2.2-3b
Uncontrolled Fast Rod Withdrawal From 100% Power with Maximum Reactivity Feedback Core Average Temperature, DNBR vs. Time - Advanced W17 HTP Fuel (Full Core)

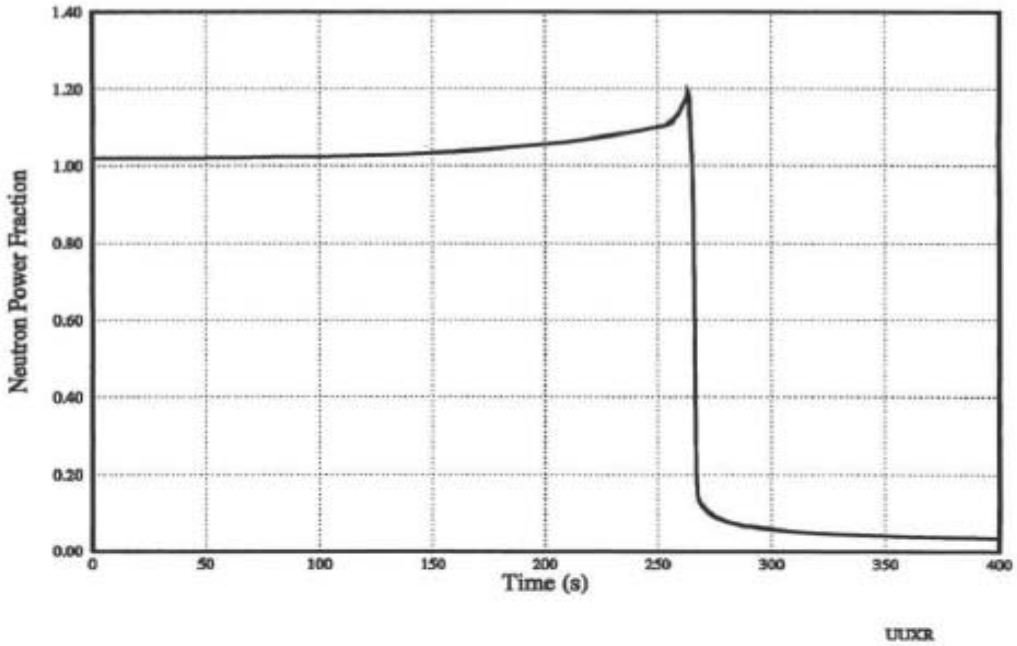

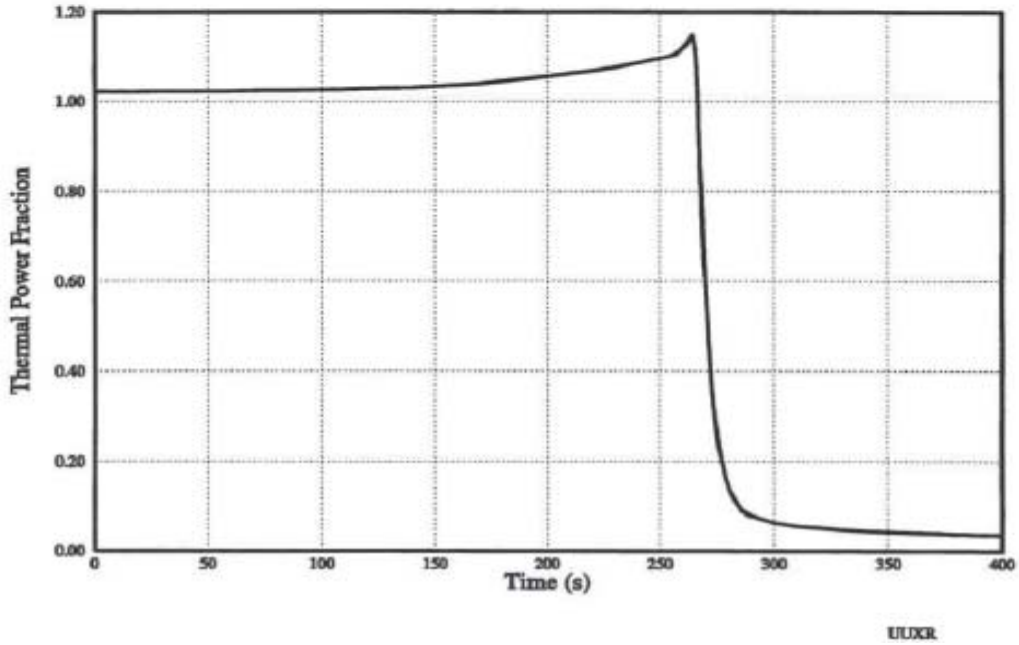

Figure 15.2.2-4a
Uncontrolled Slow Rod Withdrawal From 100% Power with Minimum Reactivity Feedback Neutron Power, Thermal Power vs Time - Advanced W17 HTP Fuel (Transition Cores)

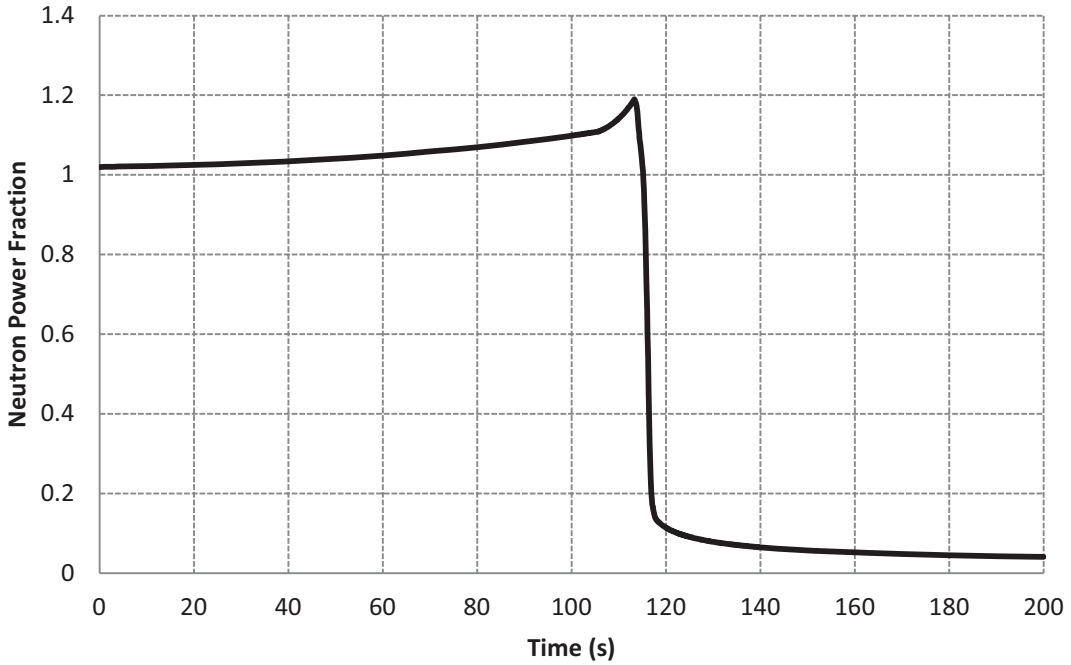

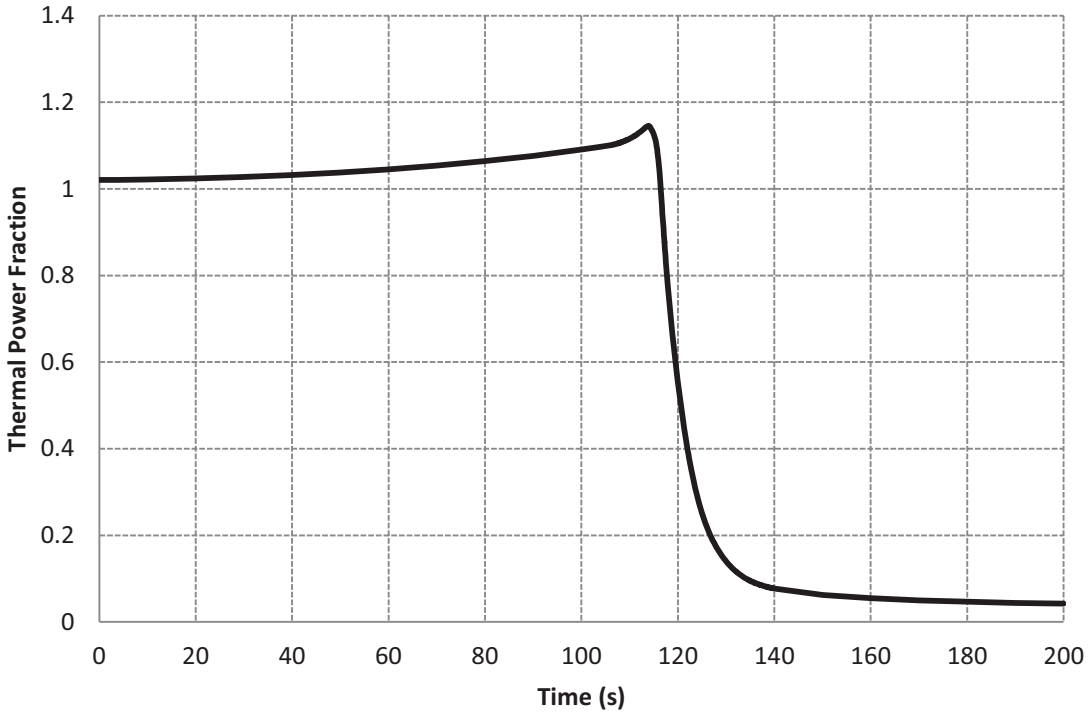

Figure 15.2.2-4b
Uncontrolled Slow Rod Withdrawal from 100% Power with Minimum Reactivity Feedback Neutron Power, Thermal Power vs Time - Advanced W17 HTP Fuel (Full Core)

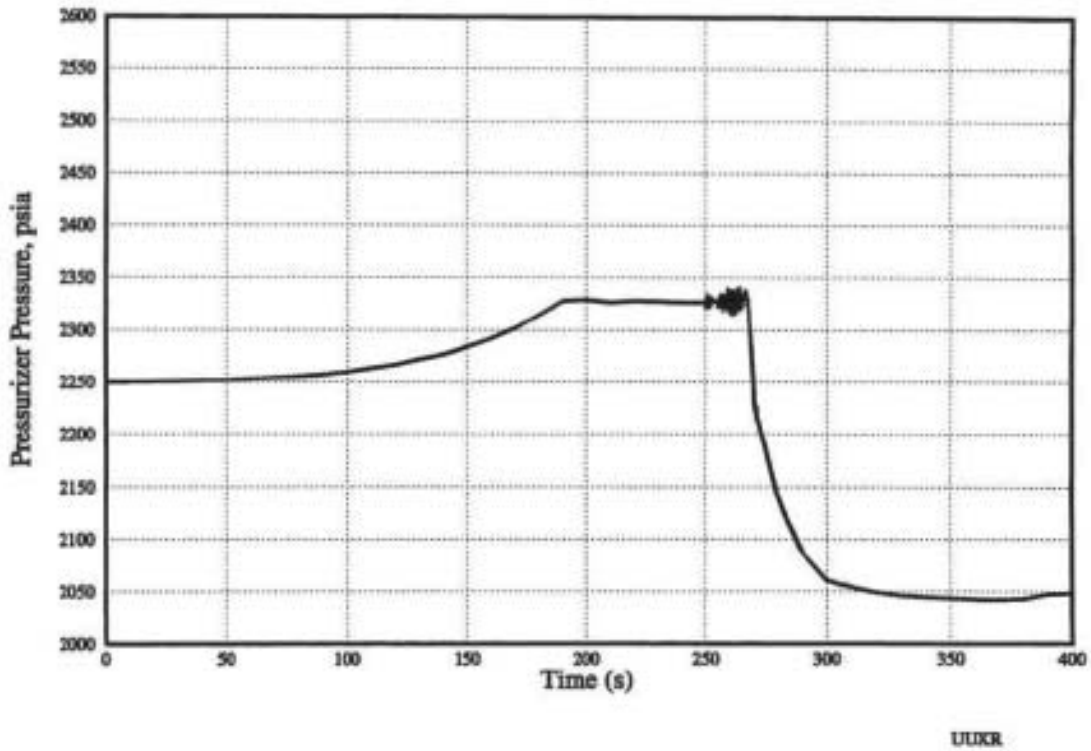

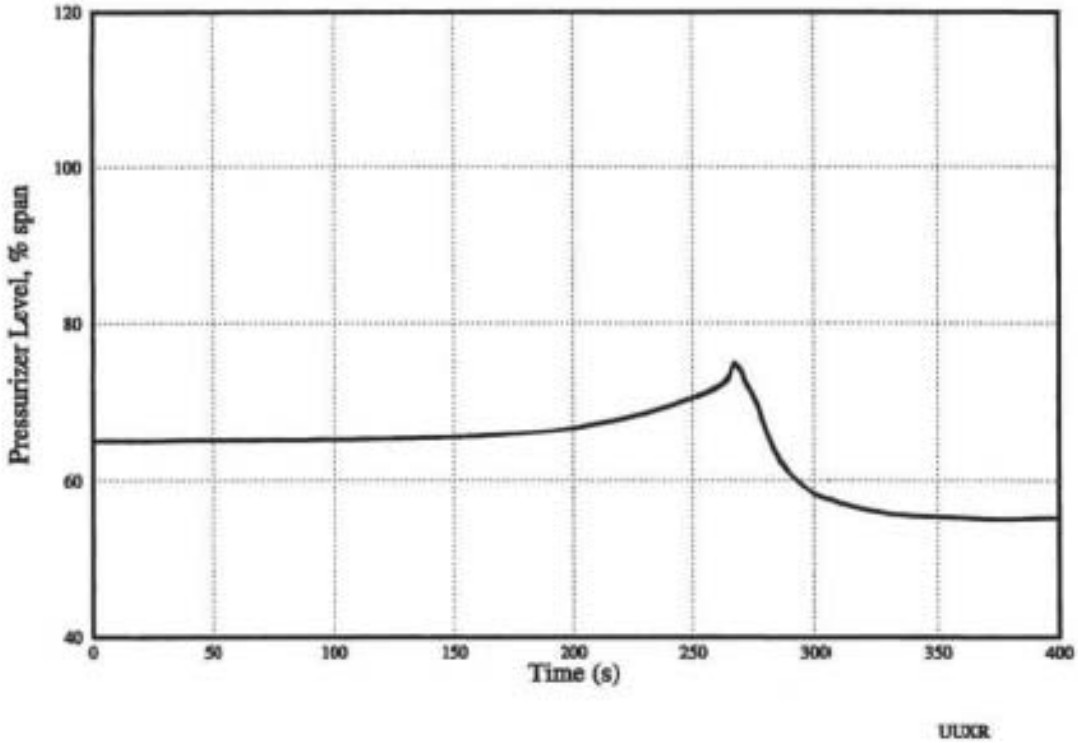

Figure 15.2.2-5a
Uncontrolled Slow Rod Withdrawal From 100% Power with Minimum Reactivity Feedback
Pressurizer Pressure, Pressurizer Water Level vs Time - Advanced W17 HTP Fuel
(Transition Cores)

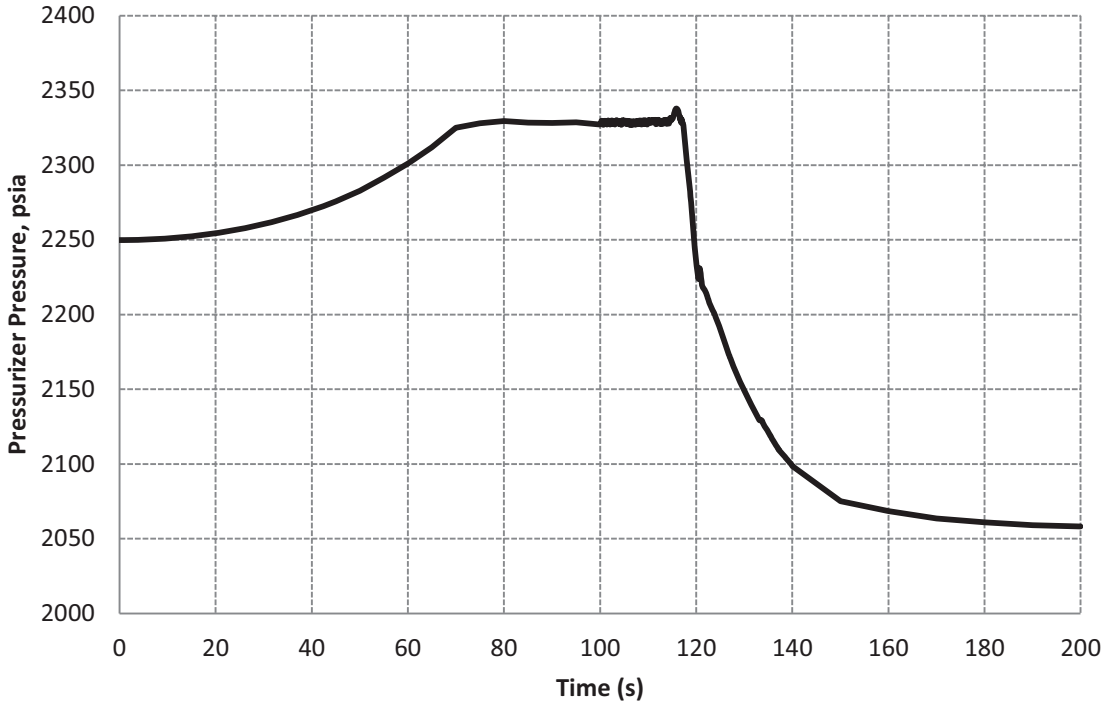

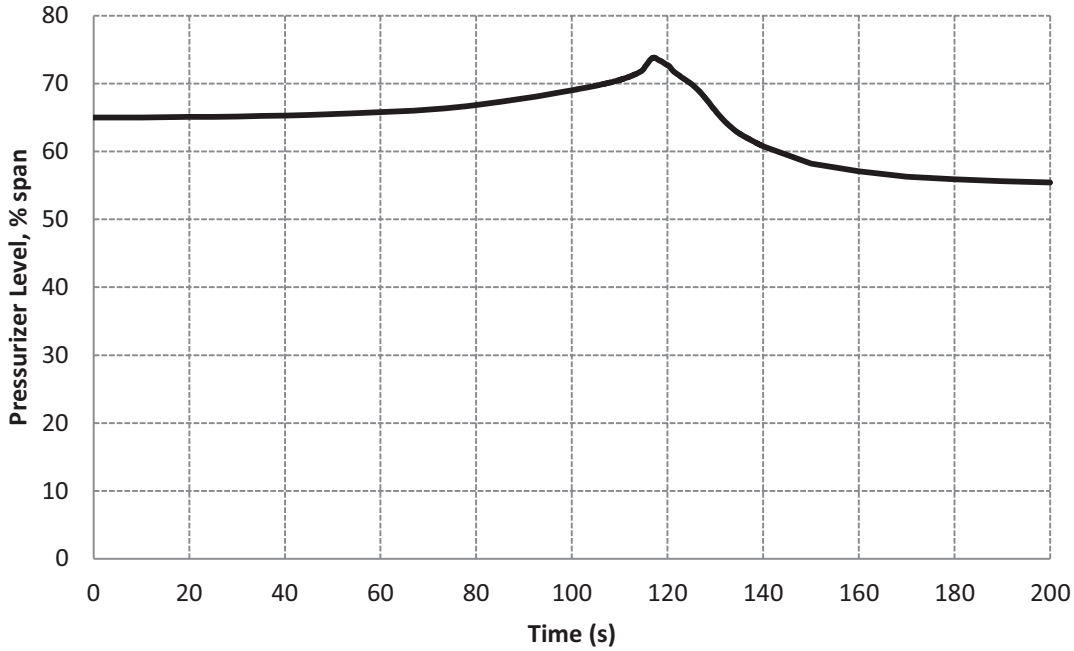

Figure 15.2.2-5b
Uncontrolled Slow Rod Withdrawal from 100% Power with Minimum Reactivity Feedback
Pressurizer Pressure, Pressurizer Water Level vs Time - Advanced W17 HTP Fuel
(Full Core)

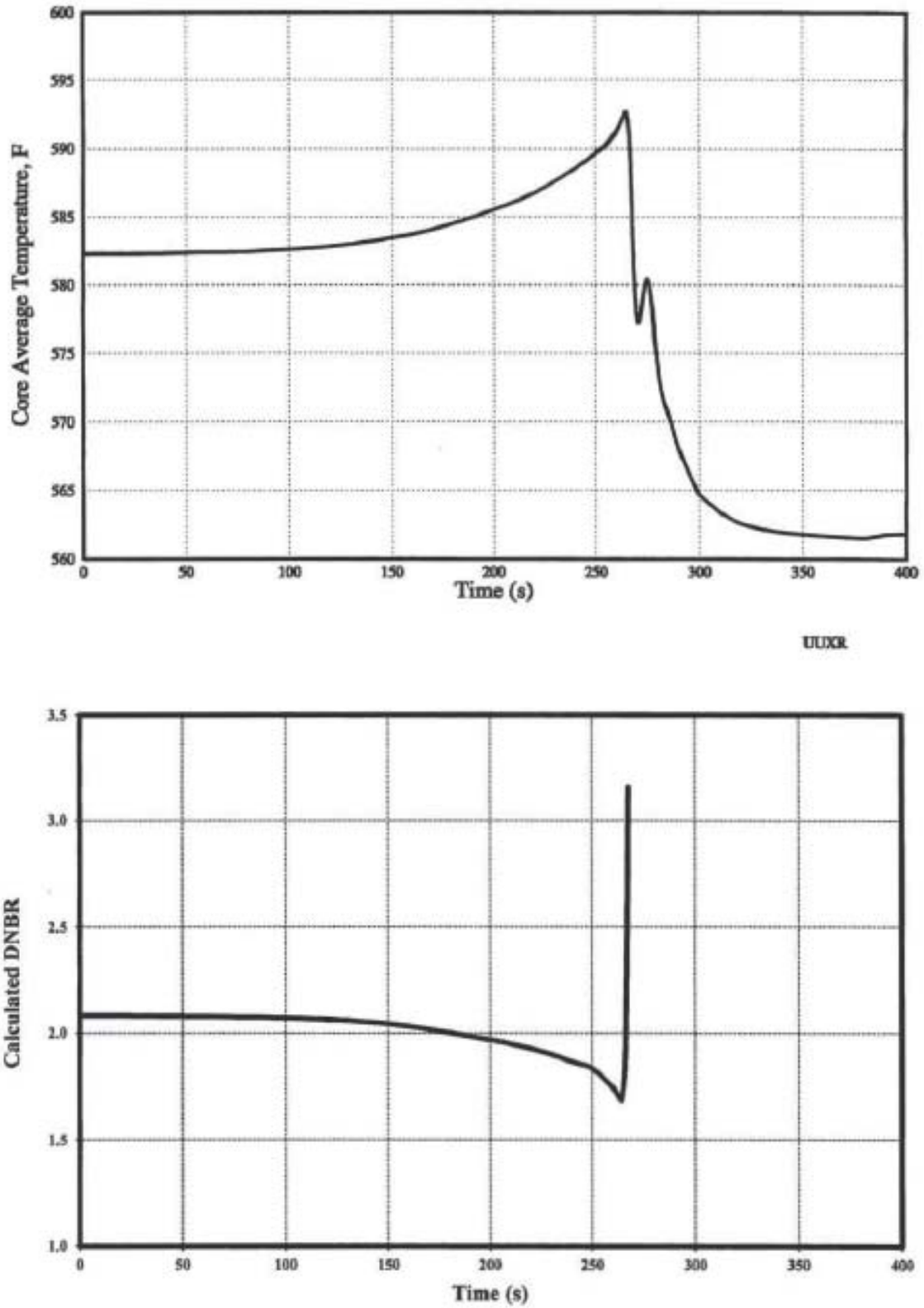

Figure 15.2.2-6a
Uncontrolled Slow Rod Withdrawal From 100% Power with Minimum Reactivity Feedback Core Average Temperature, DNBR vs Time - Advanced W17 HTP Fuel (Transition Cores)

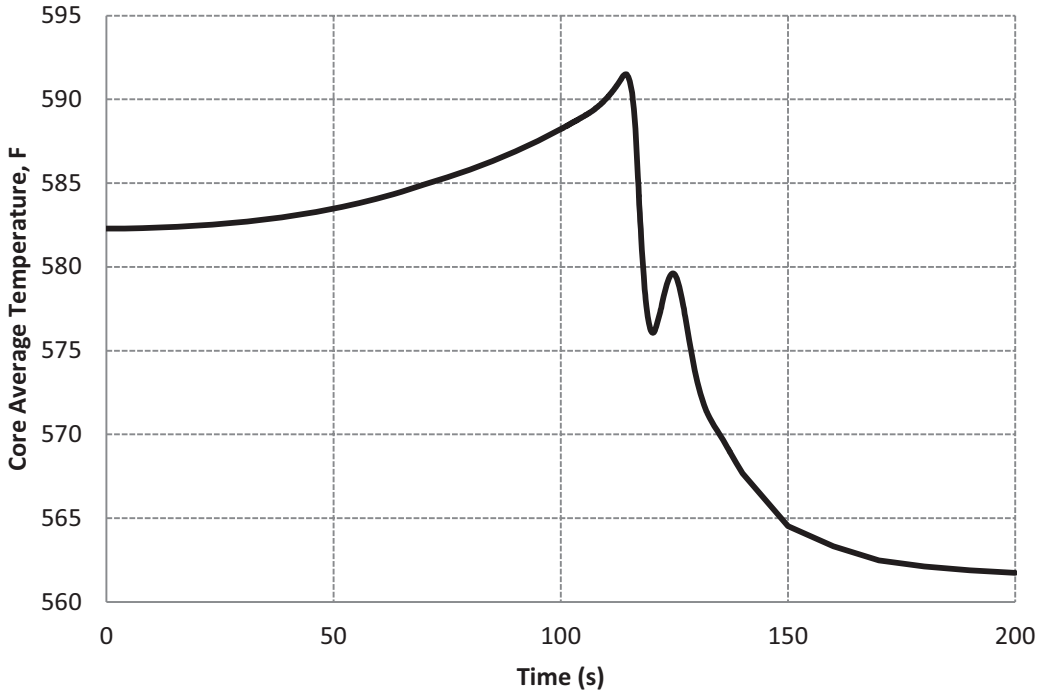

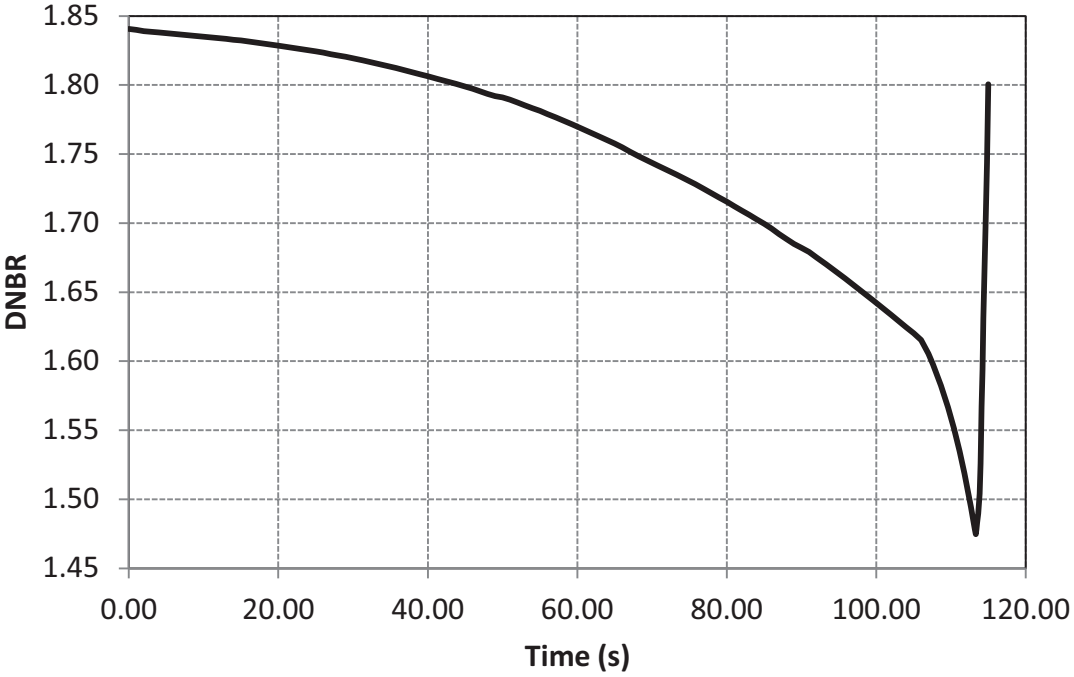

Figure 15.2.2-6b
Uncontrolled Slow Rod Withdrawal from 100% Power with Minimum Reactivity Feedback Core Average Temperature, DNBR vs Time - Advanced W17 HTP Fuel (Full Core)

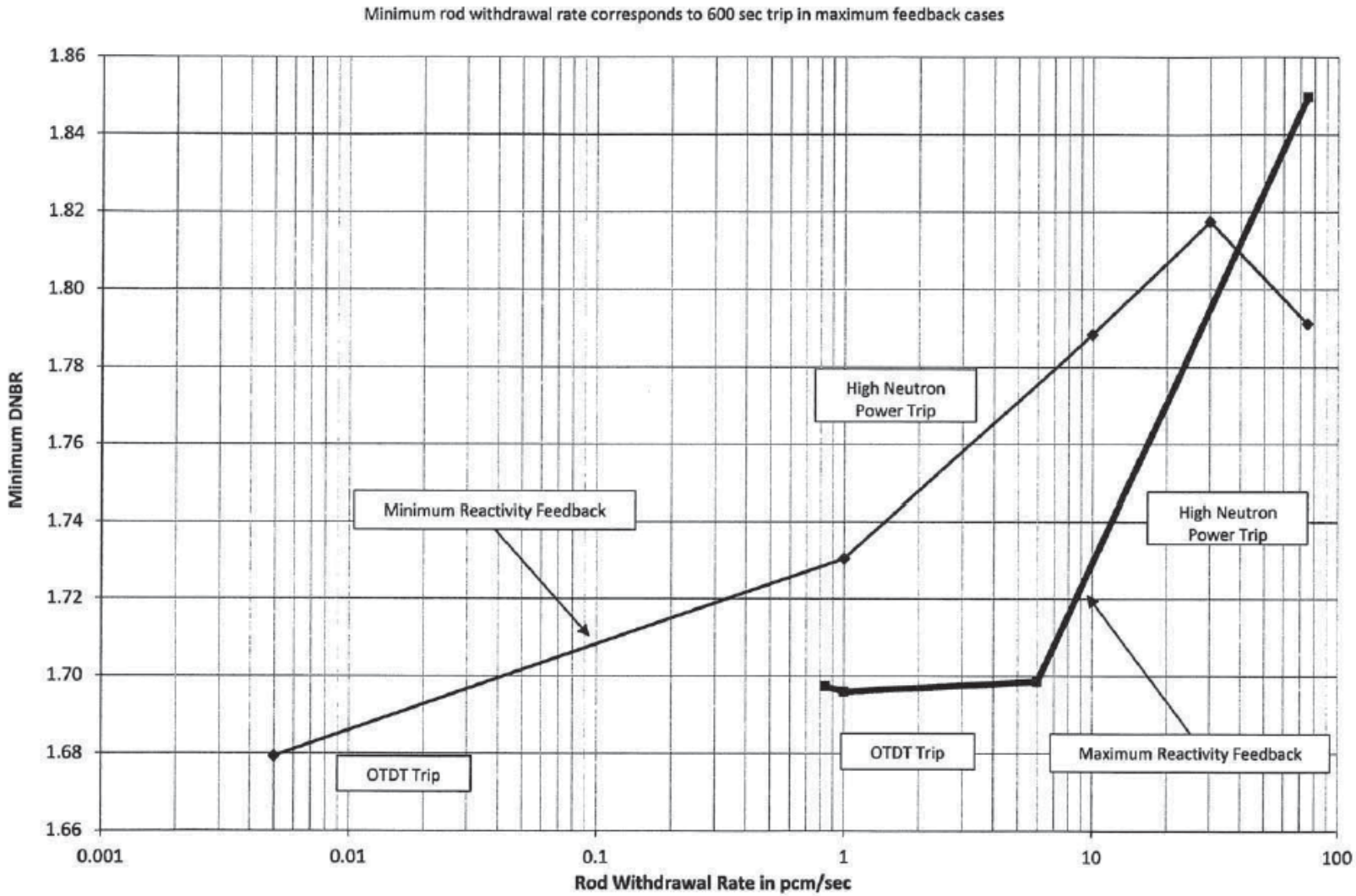

Figure 15.2.2-7a
Effect of Reactivity Insertion Rate on Minimum DNBR for a Rod Withdrawal Accident
at 100% Power, Advanced W17 HTP Fuel (Transition Cores)

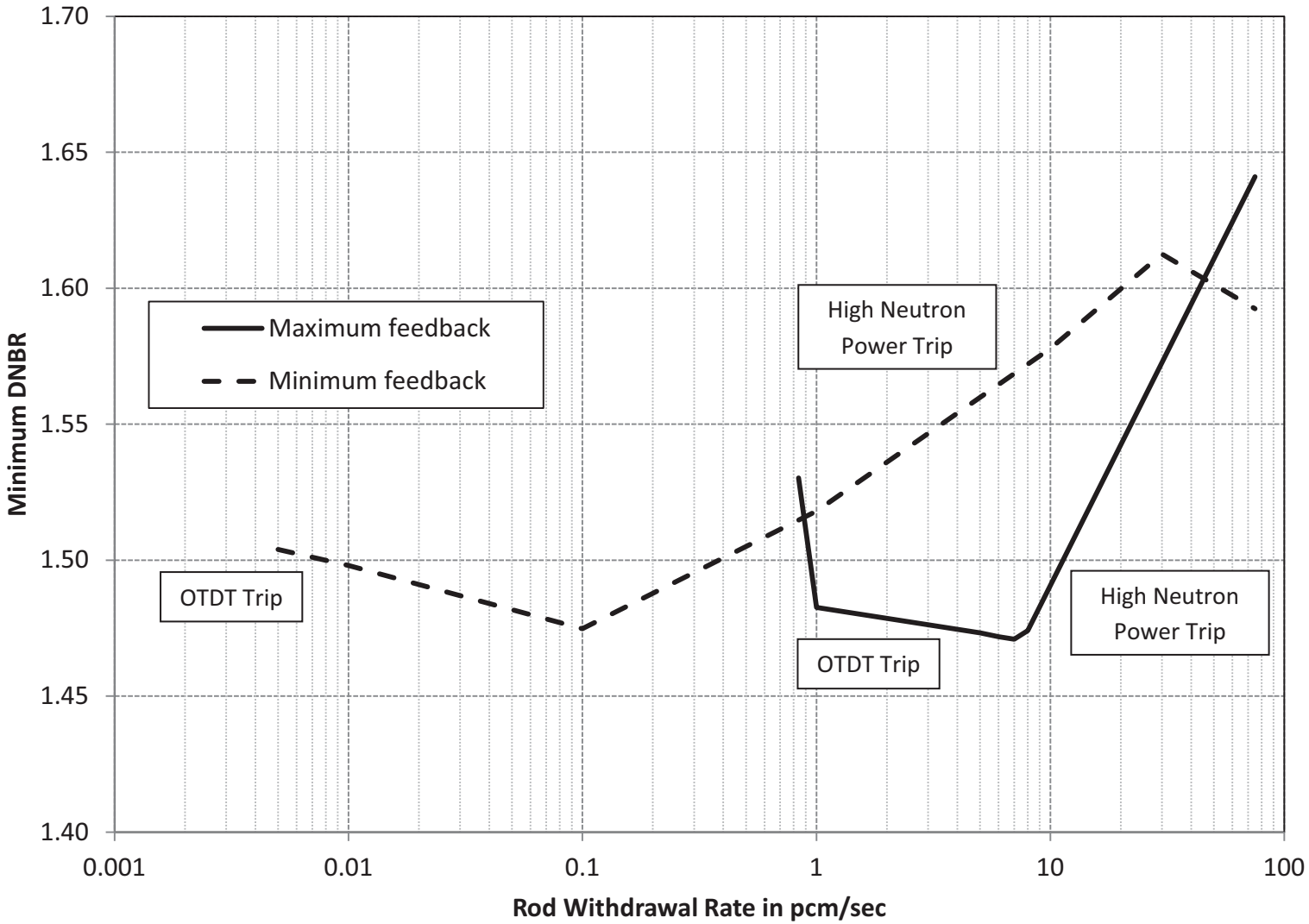

Figure 15.2.2-7b
Effect of Reactivity Insertion Rate on Minimum DNBR for a Rod Withdrawal Accident at 100% Power, Advanced W17 HTP Fuel (Full Core)

Best Available Historical Image

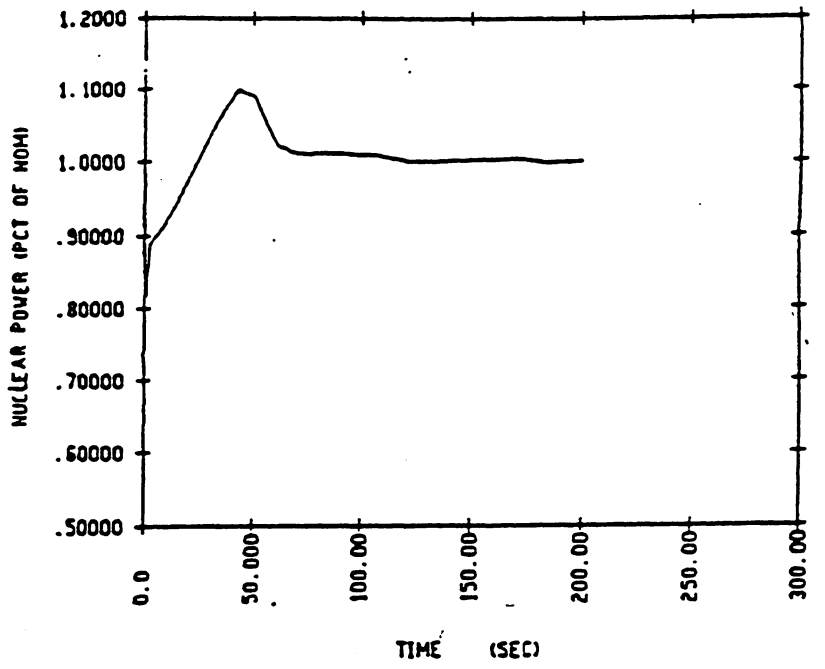

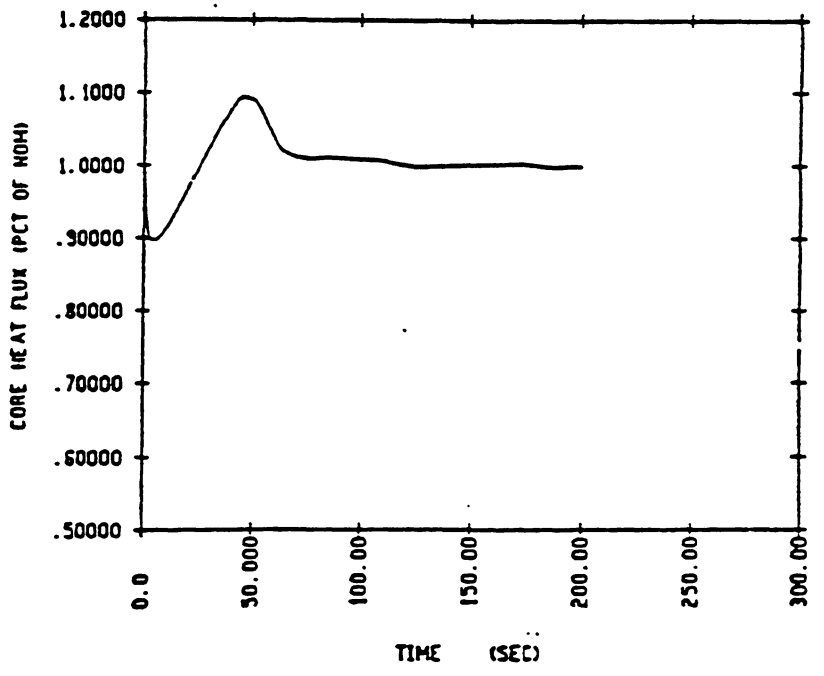

Figure 15.2.3-1 Nuclear Power and Core Heat Flux Transient Response to Dropped Rod Cluster Control Assembly

Best Available Historical Image

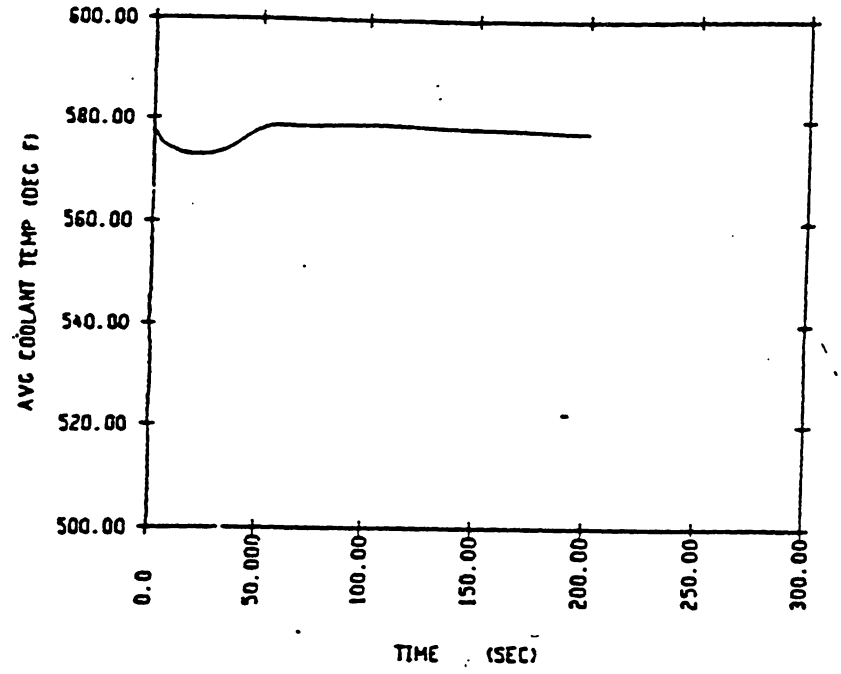

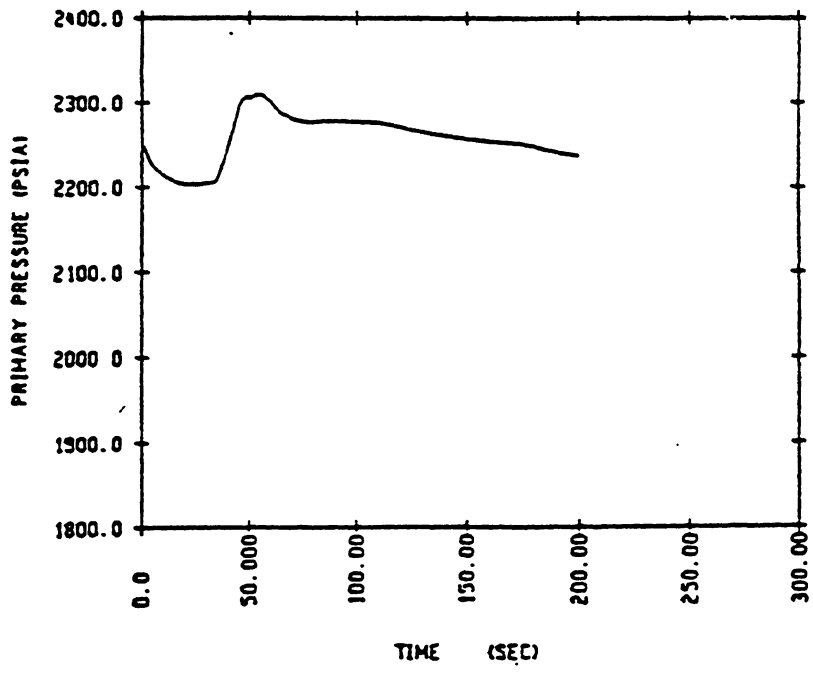

Figure 15.2.3-2 Coolant Temperature and Primary Pressure Transient Response to Dropped Rod Cluster Control Assembly

RCS BORON CONCENTRATION VS TIME

BOL EQUILIBRIUM XE AND CLEAN INITIAL CONDITIONS

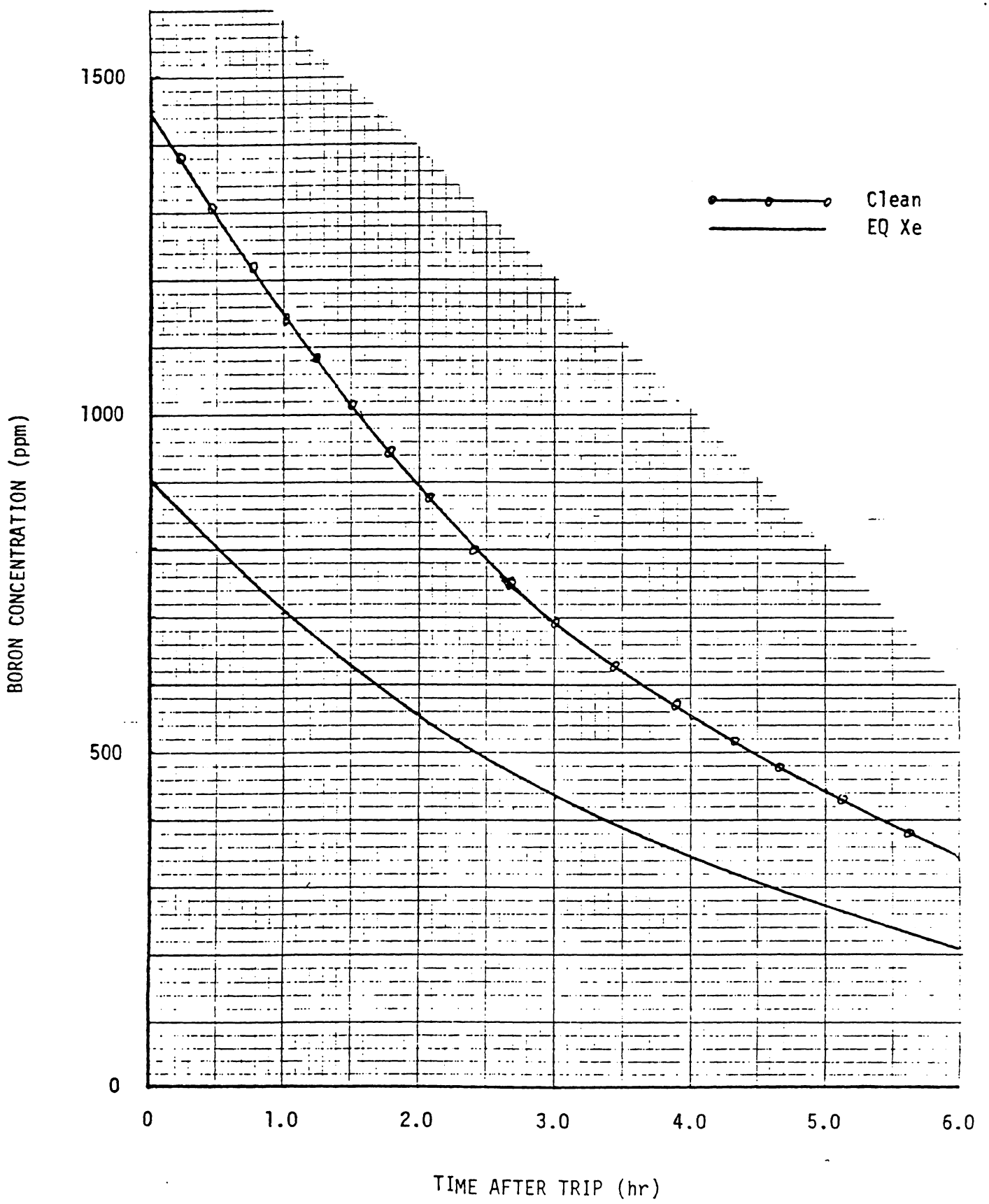

FIGURE 15.2.4-1

Keff vs Time

Equilibrium Xe and Clean Condtions
Following Trip from Full Power

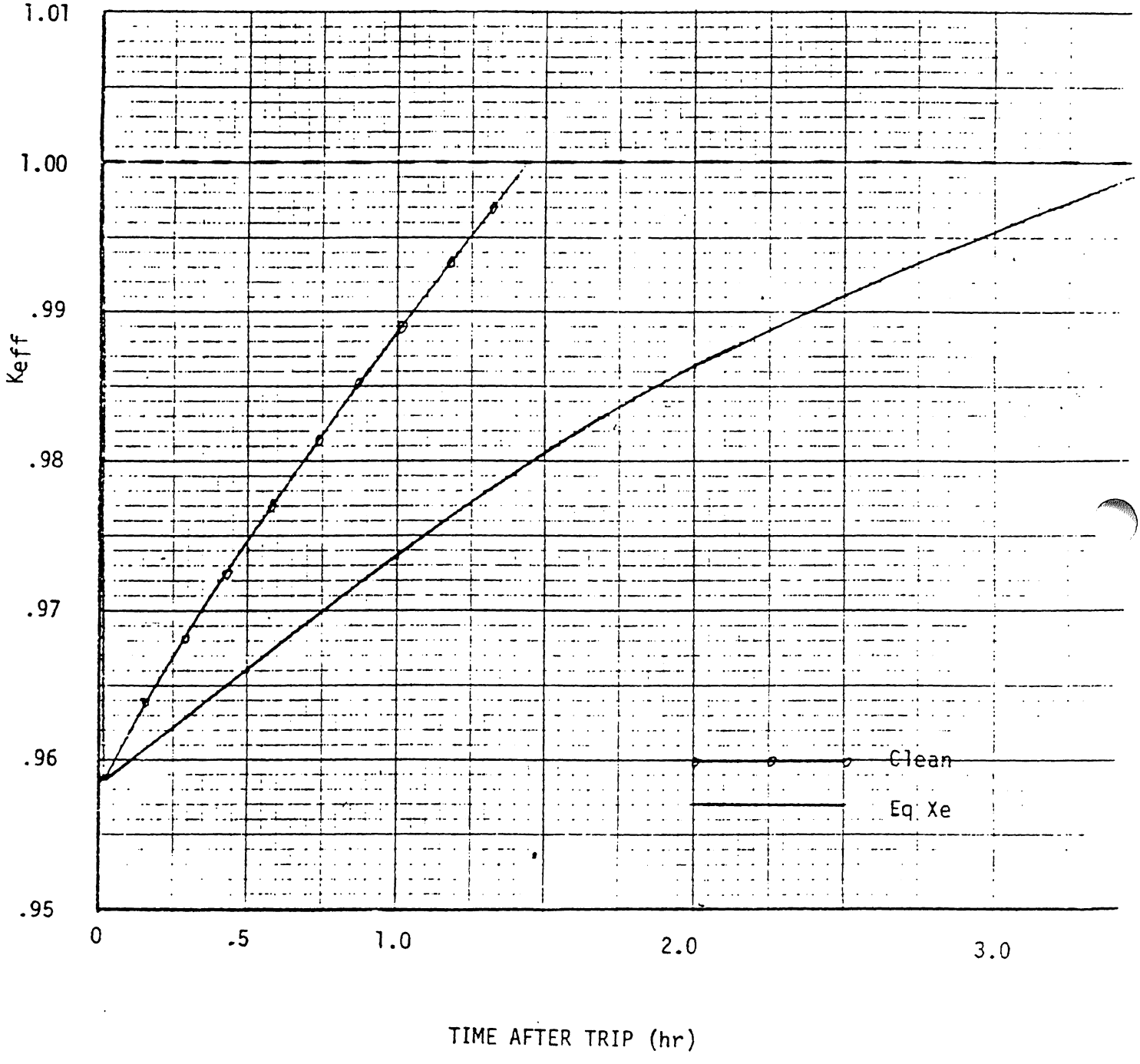

FIGURE 15.2.4-2

NUCLEAR POWER (DETECTOR INDICATION) AFTER TRIP VS TIME

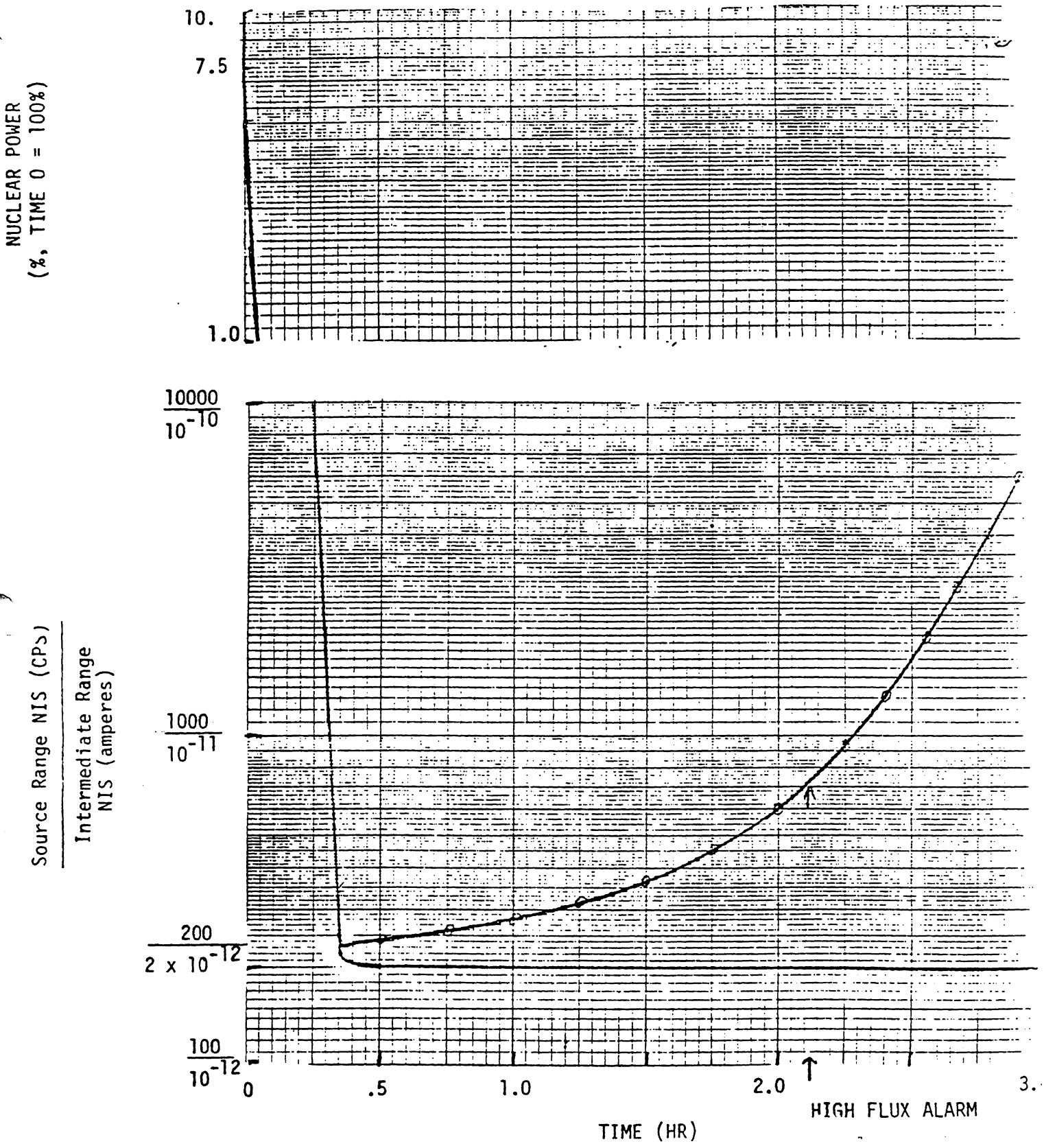

——— EQ. Xe, no dilution

Figure 15.2.4-3

—o—o— Dilution event occuring simultaneously with flux reduction due to trip

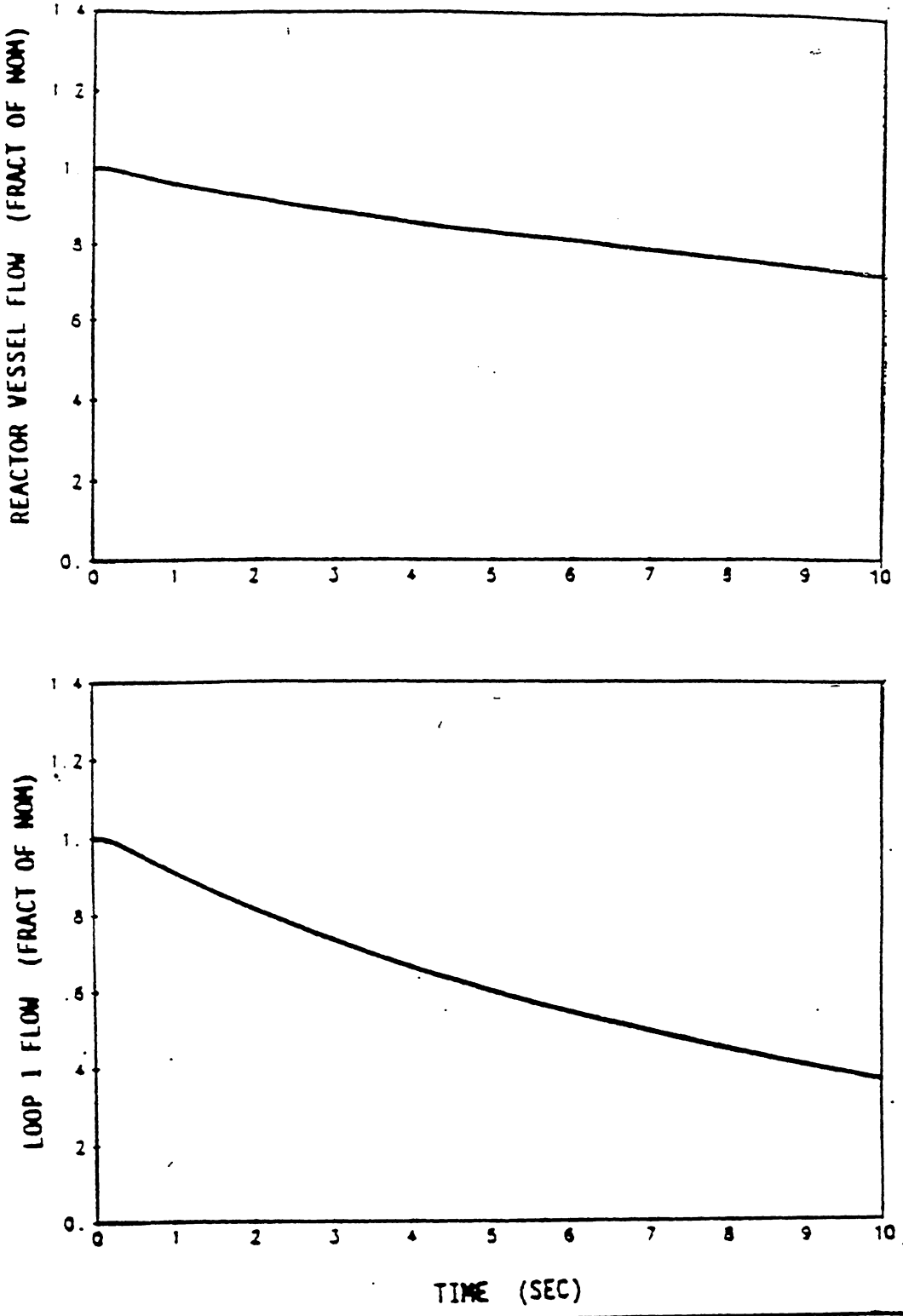

SEQUOYAH
FINAL SATETY ANALYSIS REPORT
UNITS 1 and 2

Partial Loss of Forced Reactor Coolant Flow, Reactor Vessel and Loop Flow vs. Time

Figure 15.2.5-1

Revised by Amendment 10

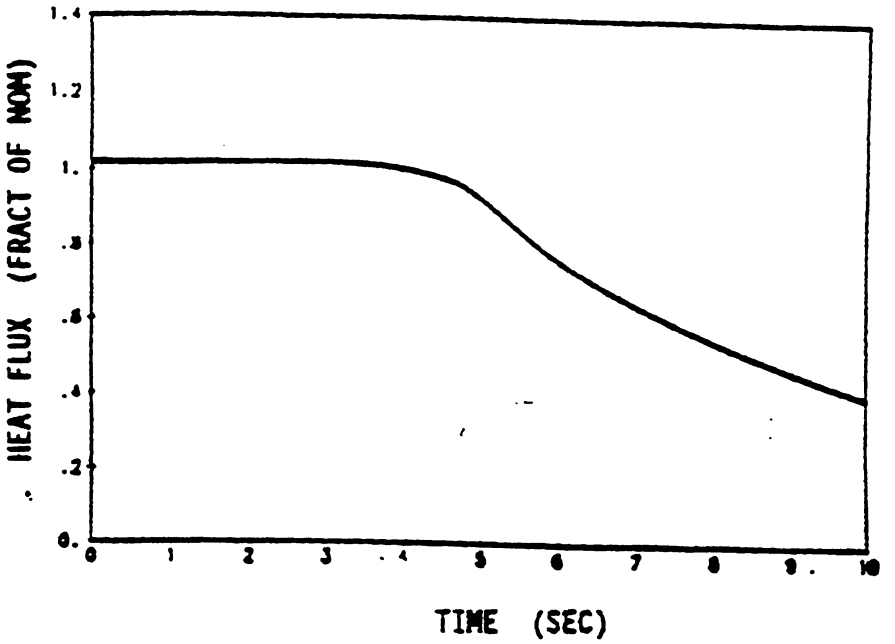

SEQUOYAH FINAL SATETY ANALYSIS REPORT UNITS 1 and 2
Partial Loss of Forced Reactor Coolant Flow, Heat Flux vs. Time (Hot Channel) - Mark-BW fuel
Figure 15.2.5-2a a

Revised by Amendment 24

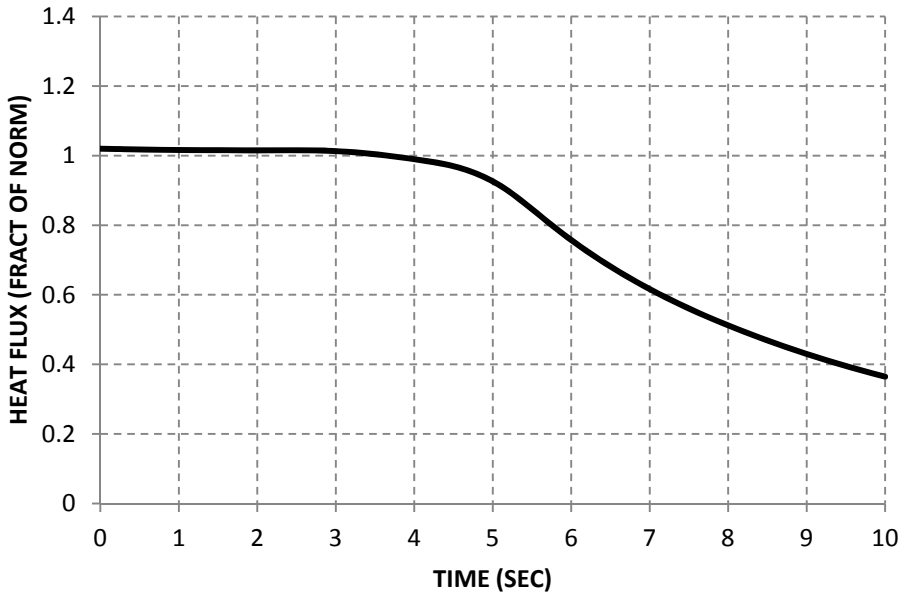

Figure 15.2.5-2ab Partial Loss of Forced Reactor Coolant Flow, Heat Flux vs. Time (Hot Channel) – Advanced W17 HTP Fuel

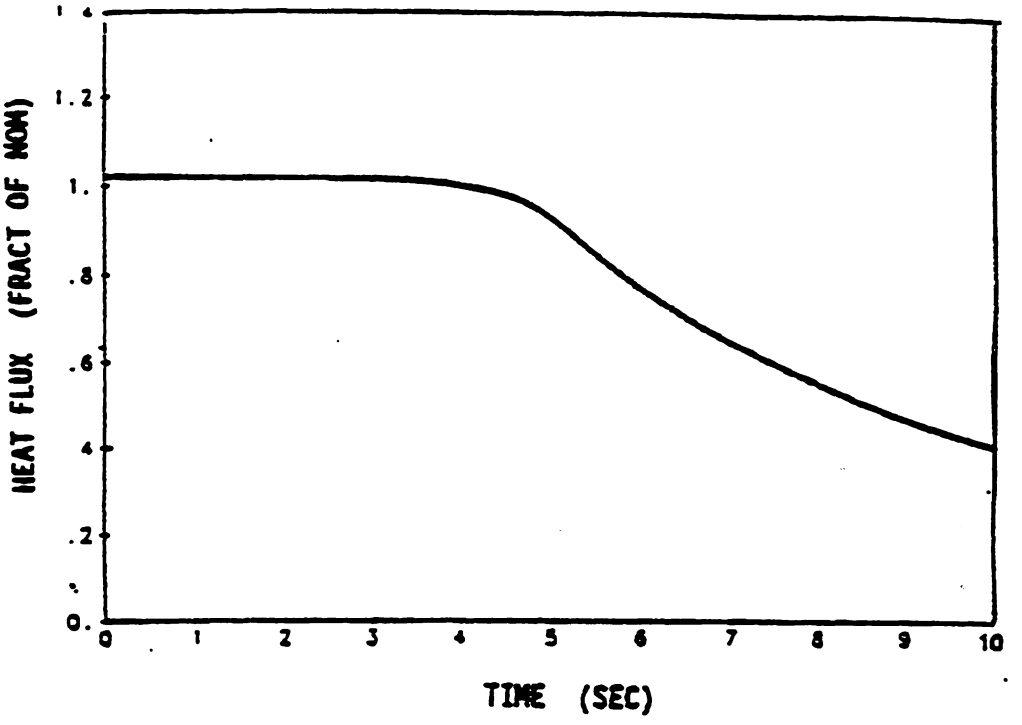

SEQUOYAH FINAL SATETY ANALYSIS REPORT UNITS 1 and 2
Partial Loss of Forced Reactor Coolant Flow, Heat Flux vs. Time (Average Channel) - Mark-BW fuel
Figure 15.2.5-2b a

Revised by Amendment 24

Figure 15.2.5-2bb

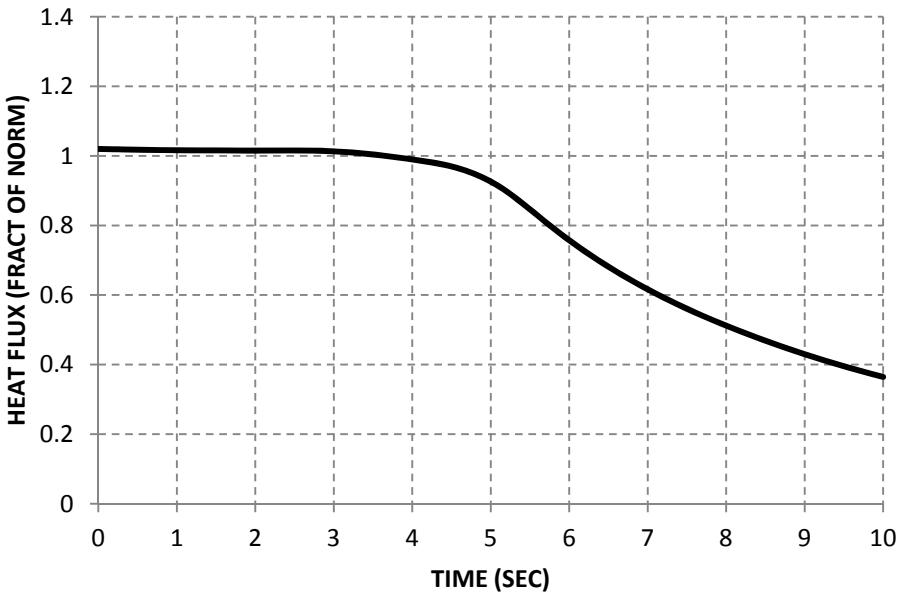

Partial Loss of Forced Reactor Coolant Flow, Heat Flux vs. Time (Average Channel) – Advanced W17 HTP Fuel

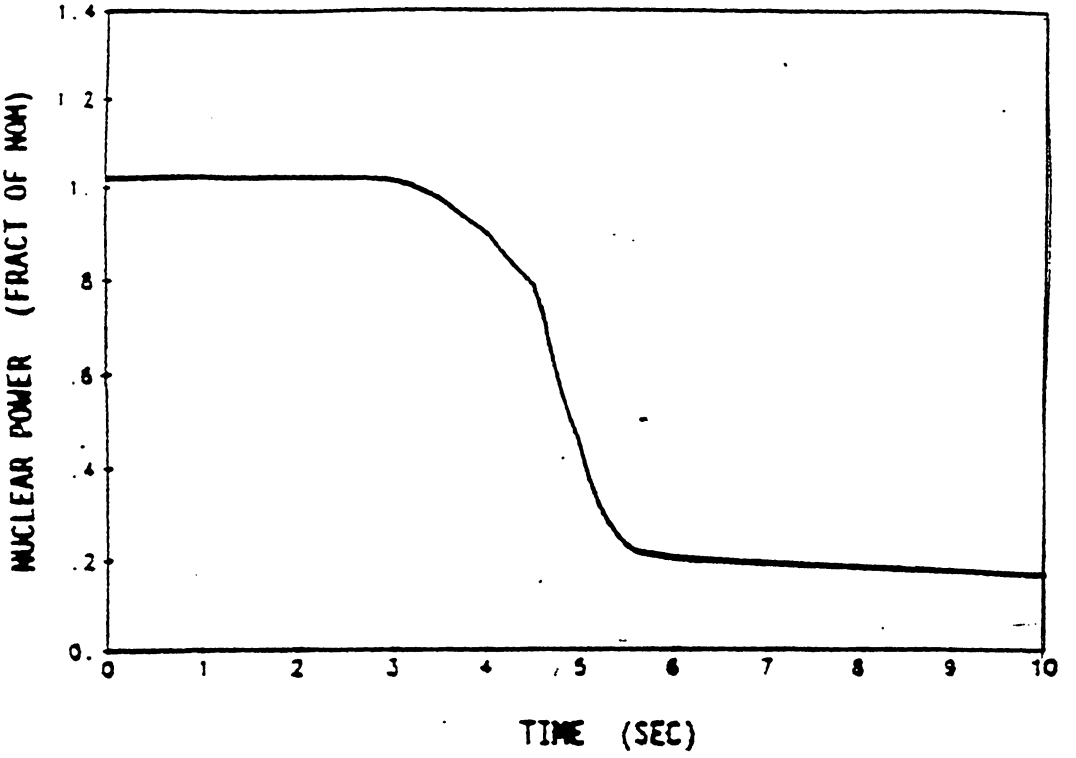

SEQUOYAH
FINAL SATETY ANALYSIS REPORT
UNITS 1 and 2

Partial Loss of Forced Reactor Coolant Flow, Nuclear Power vs. Time

Figure 15.2.5-2c

Revised by Amendment 10

Figure 15.2.5-3a

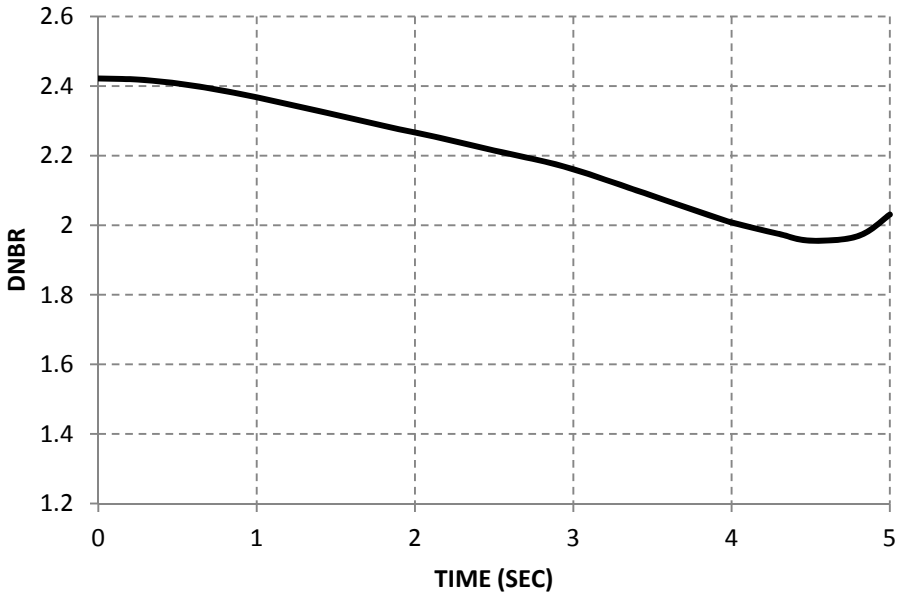

Partial Loss of Forced Reactor Coolant Flow, DNBR vs Time - Mark-BW Fuel

Figure 15.2.5-3b

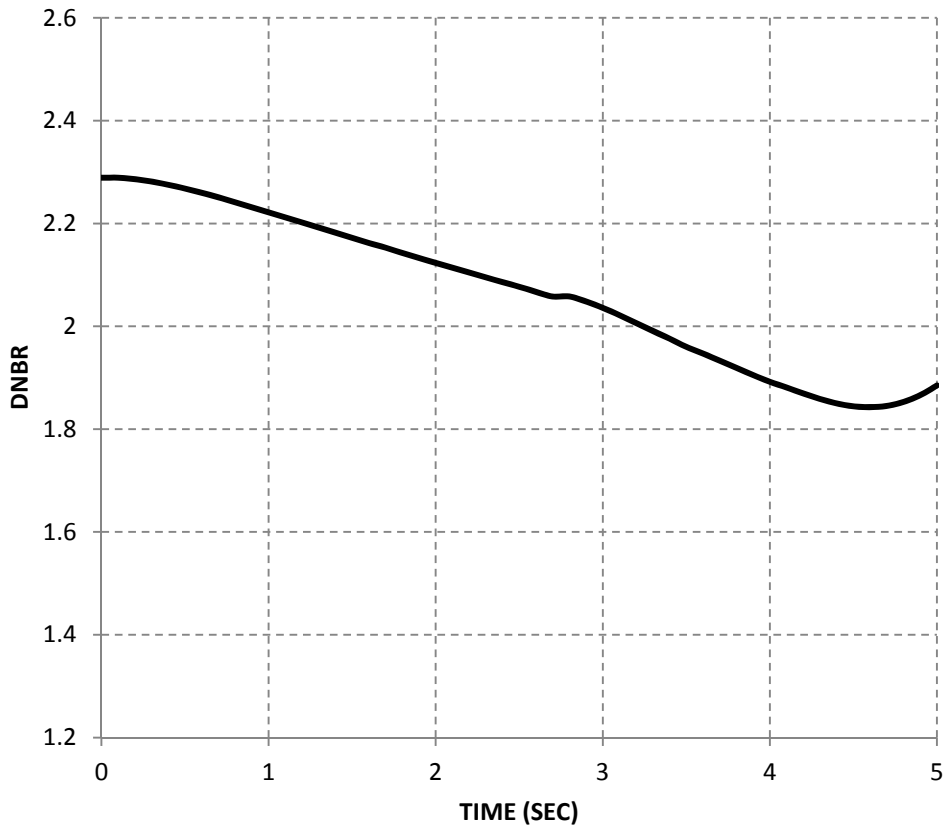

Partial Loss of Forced Reactor Coolant Flow,
DNBR vs. Time – Advanced W17 HTP Fuel (Transition Cores)

Figure 15.2.5-3c

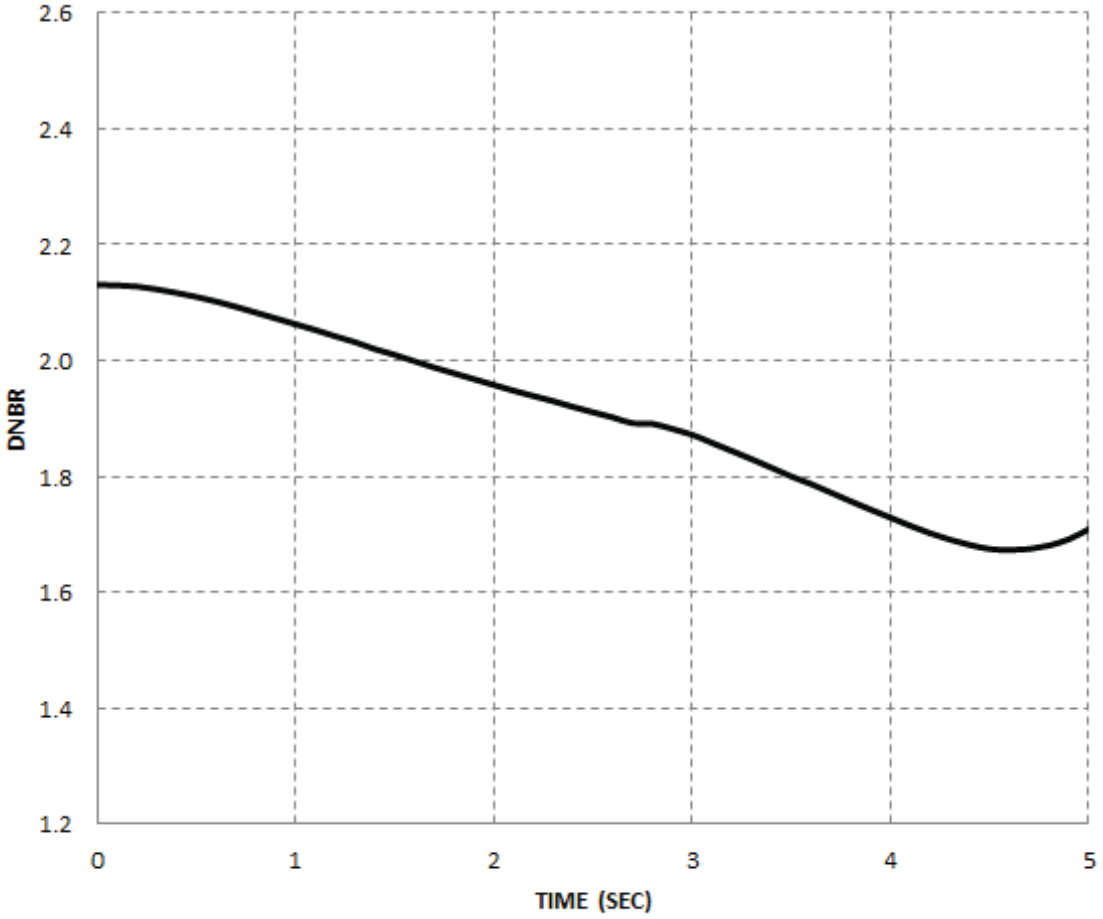

Partial Loss of Forced Reactor Coolant Flow, DNBR vs. Time – Advanced W17 HTP Fuel (Full Core)

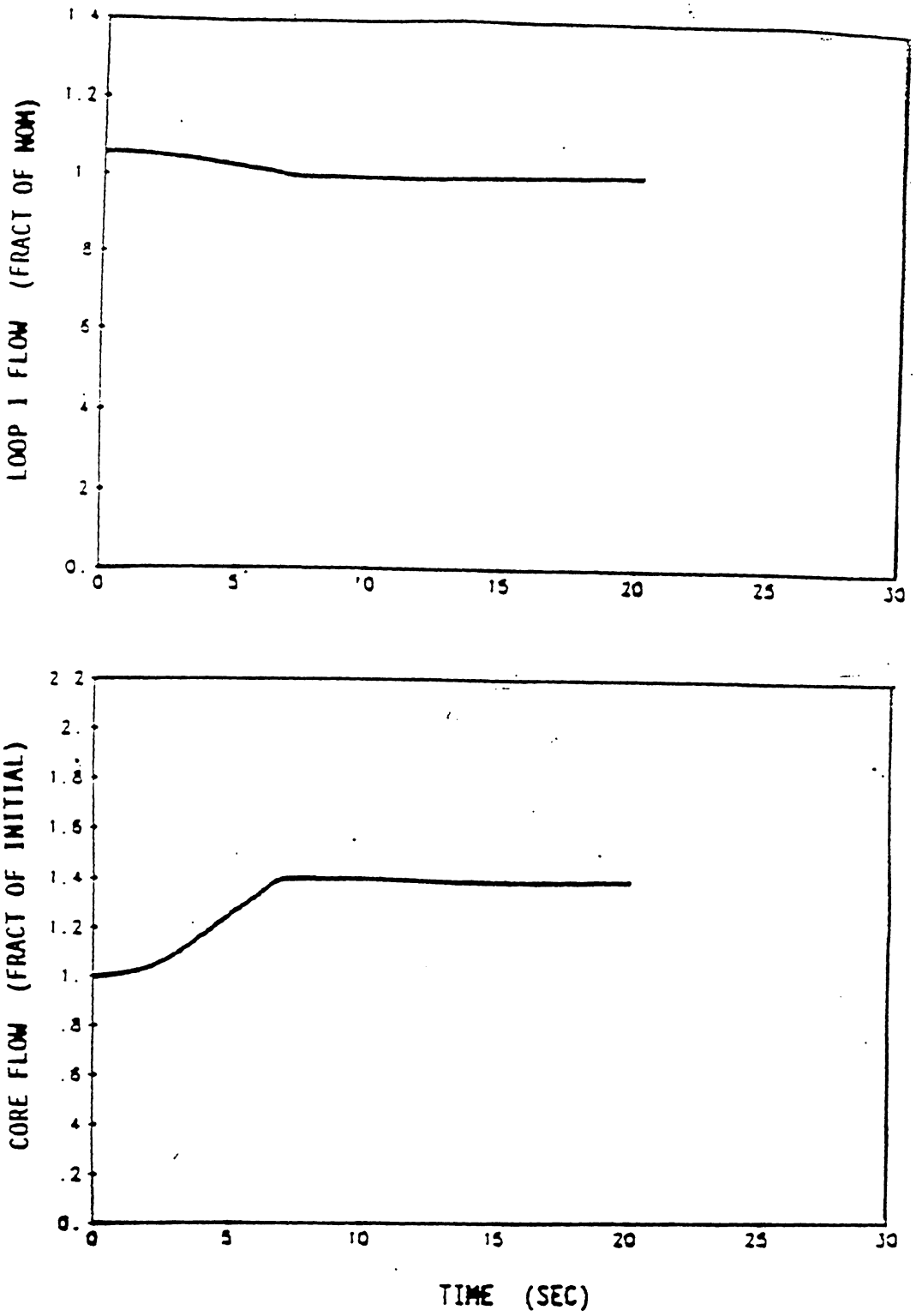

SEQUOYAH FINAL SATETY ANALYSIS REPORT UNITS 1 and 2
Startup of an Inactive Reactor Coolant Pump, Active Loop Flow vs. Time; Core Flow vs. Time
Figure 15.2.6-1

Revised by Amendment 10

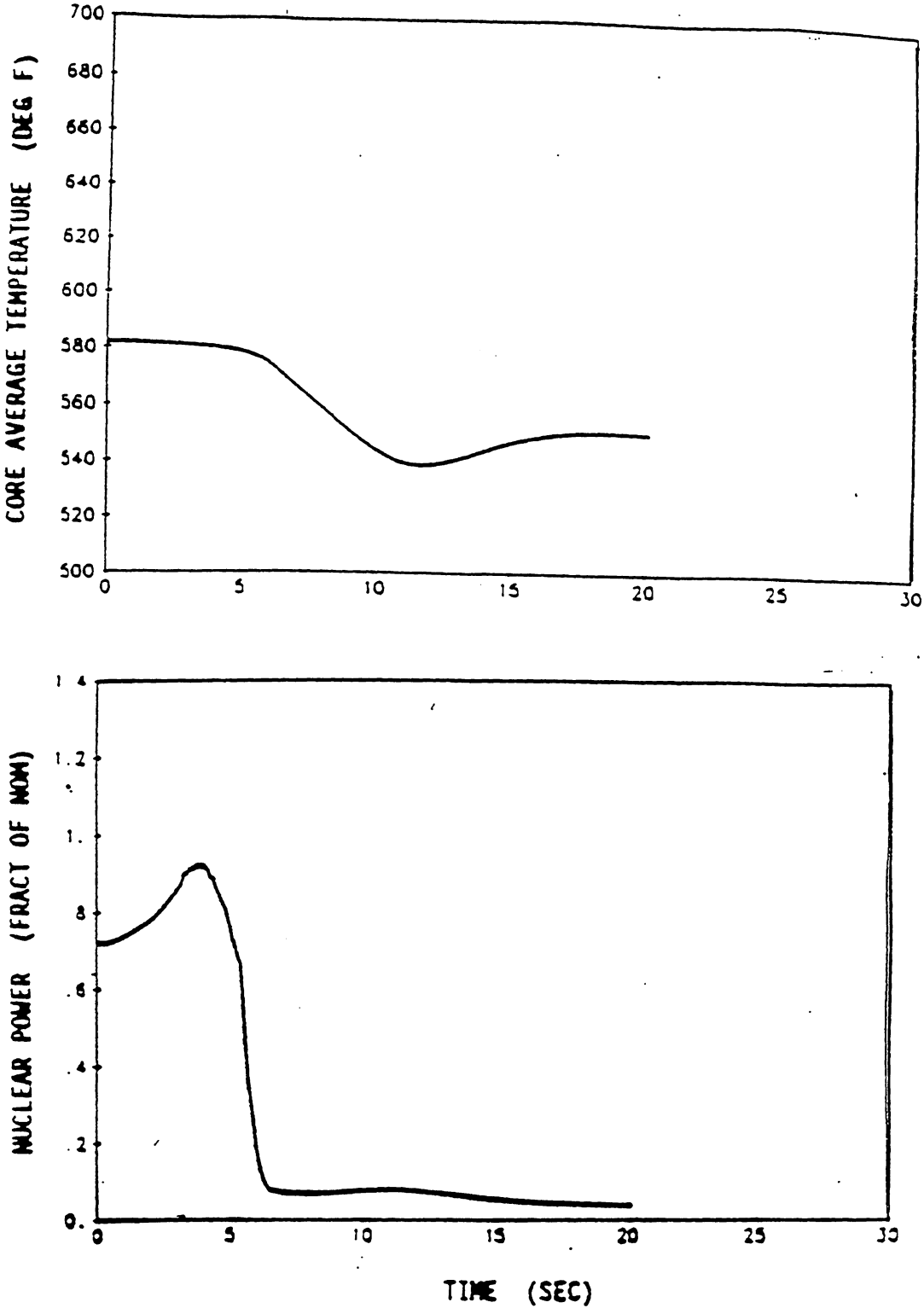

SEQUOYAH FINAL SATETY ANALYSIS REPORT UNITS 1 and 2
Startup of an Inactive Reactor Coolant Pump, Core Average Temperature vs. Time; Nuclear Power vs. Time
Figure 15.2.6-2

Revised by Amendment 10

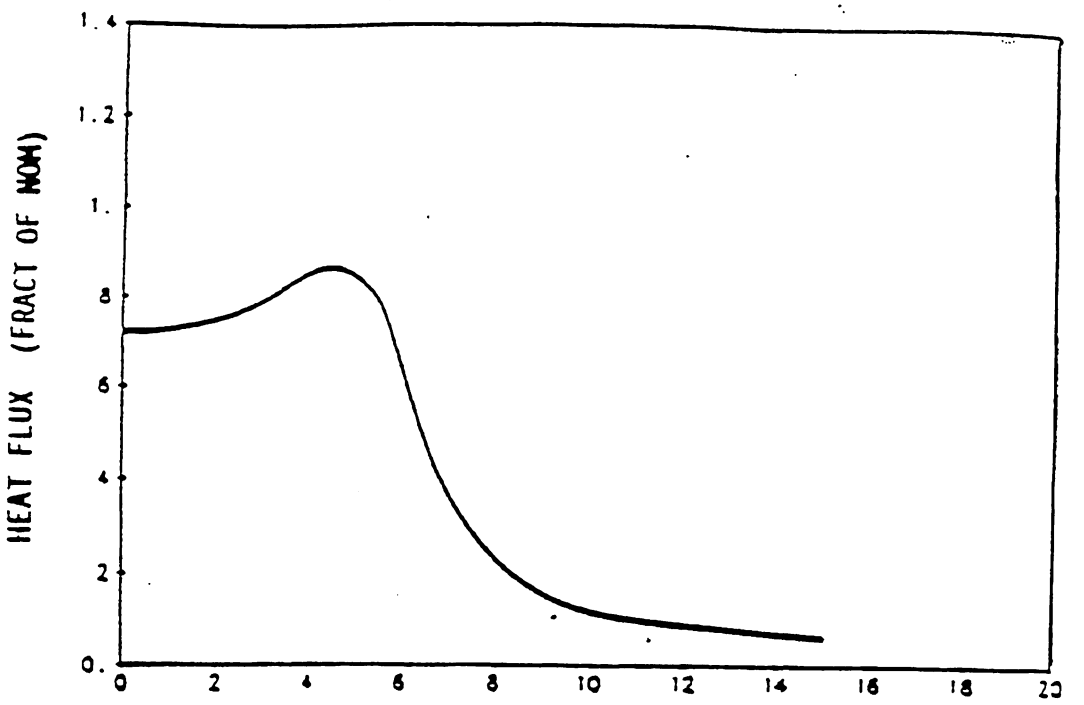

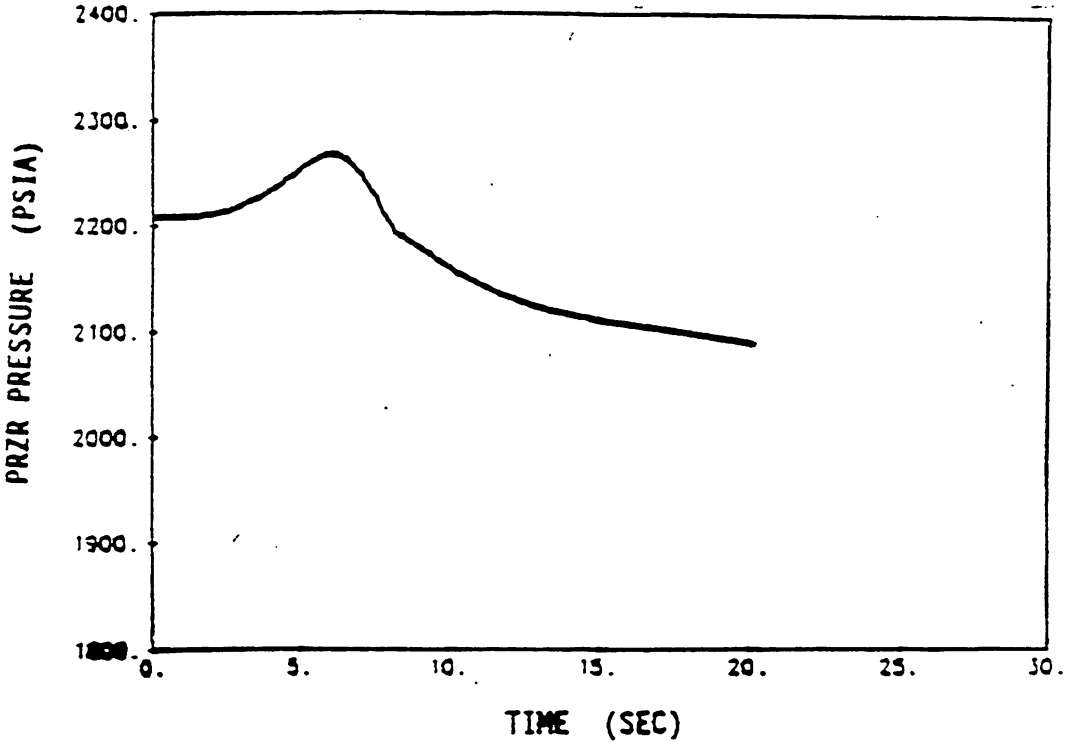

SEQUOYAH FINAL SATETY ANALYSIS REPORT UNITS 1 and 2
Startup of an Inactive Reactor Coolant Pump, Heat Flux vs. Time; Pressurizer Pressure vs. Time
Figure 15.2.6-3

Revised by Amendment 10

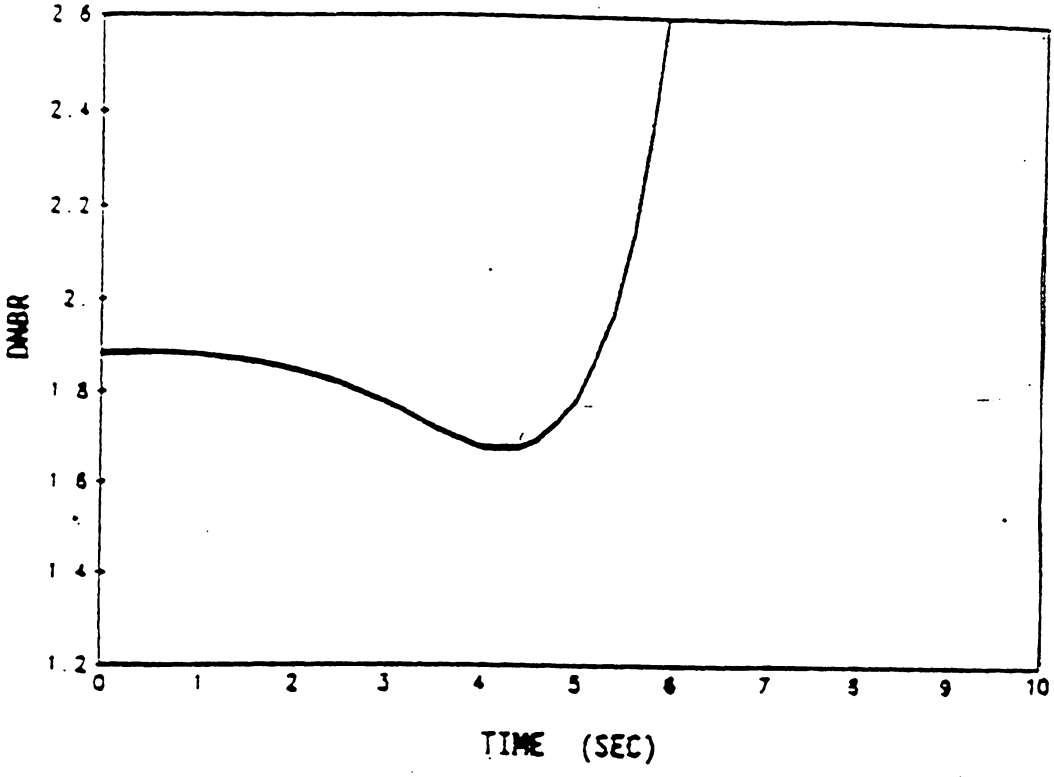

SEQUOYAH
FINAL SATETY ANALYSIS REPORT
UNITS 1 and 2

Startup of an Inactive Reactor Coolant Pump, DNBR vs. Time

Figure 15.2.6-4

Revised by Amendment 10

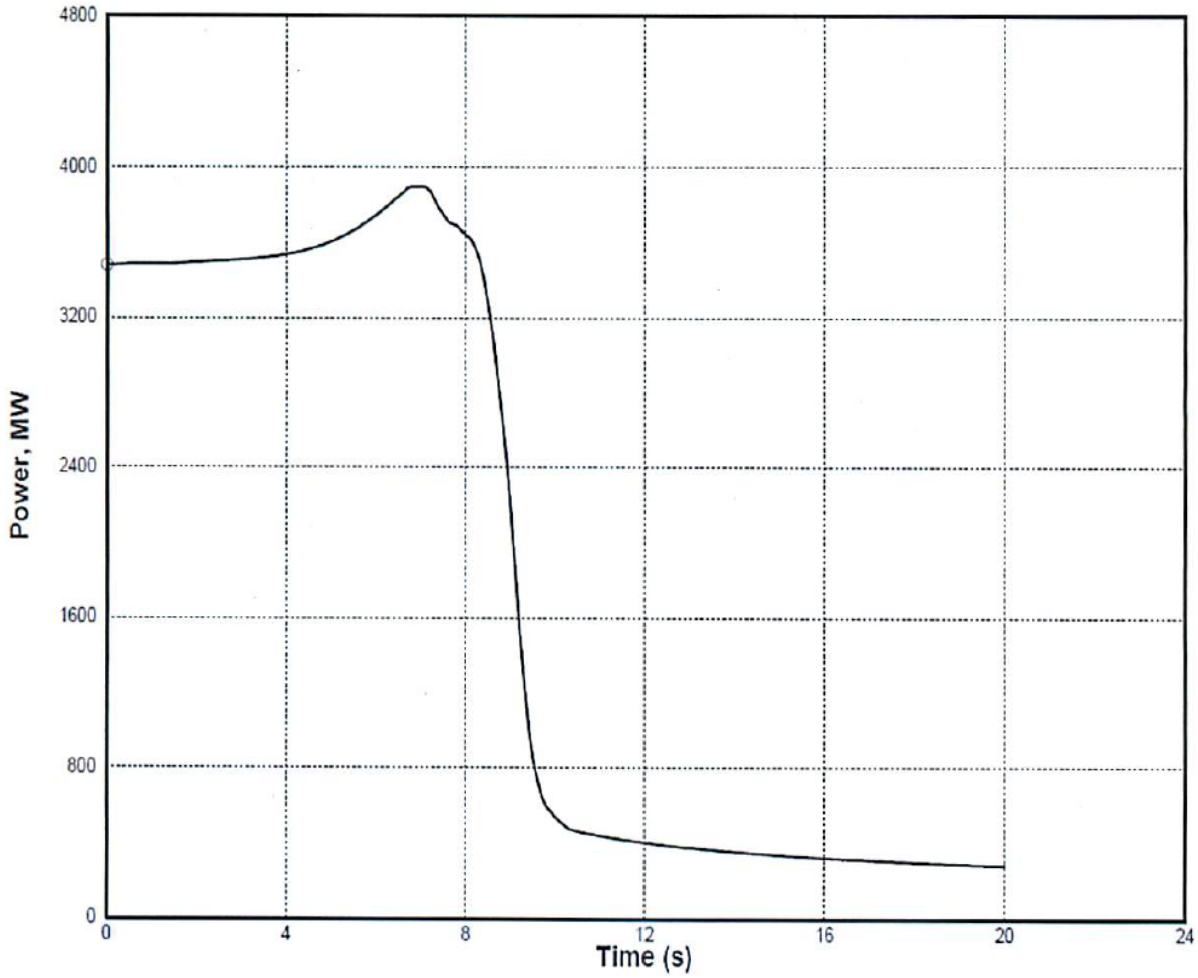

FIGURE 15.2.7-1a

Loss of Electric Load (Peak Primary Pressure Case) Core Power

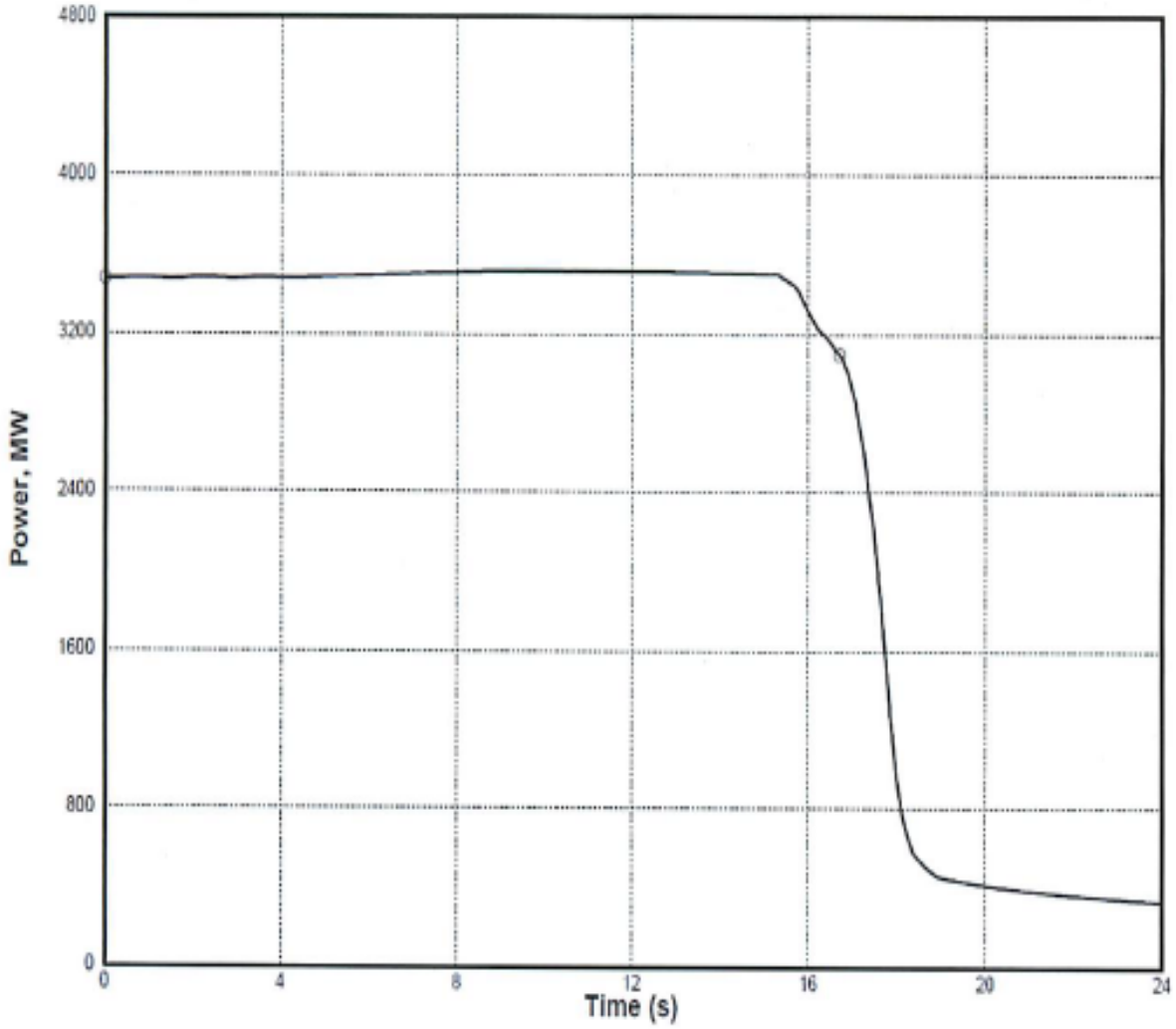

FIGURE 15.2.7-1b

Loss of Electric Load (Peak Secondary Pressure Case) Core Power

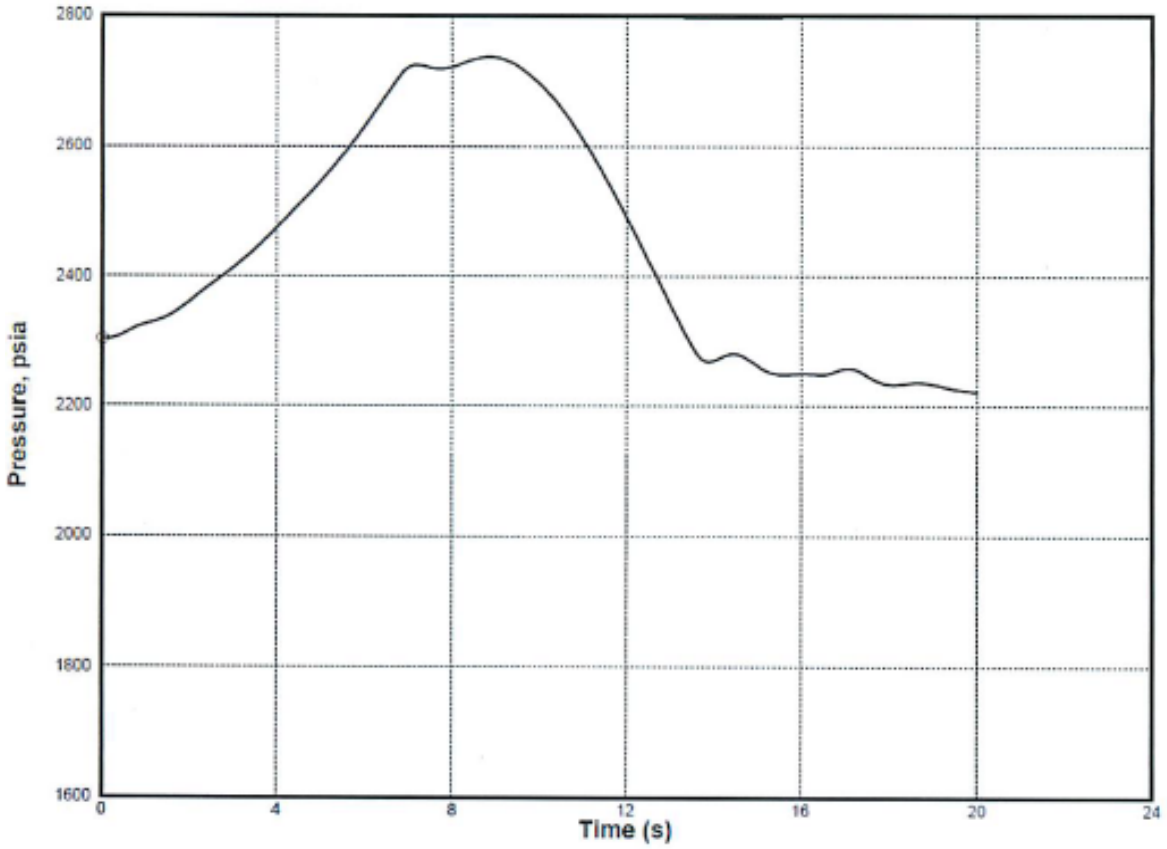

FIGURE 15.2.7-2a

Loss of Electric Load (Peak Primary Pressure Case) Reactor Vessel Lower Plenum Pressure

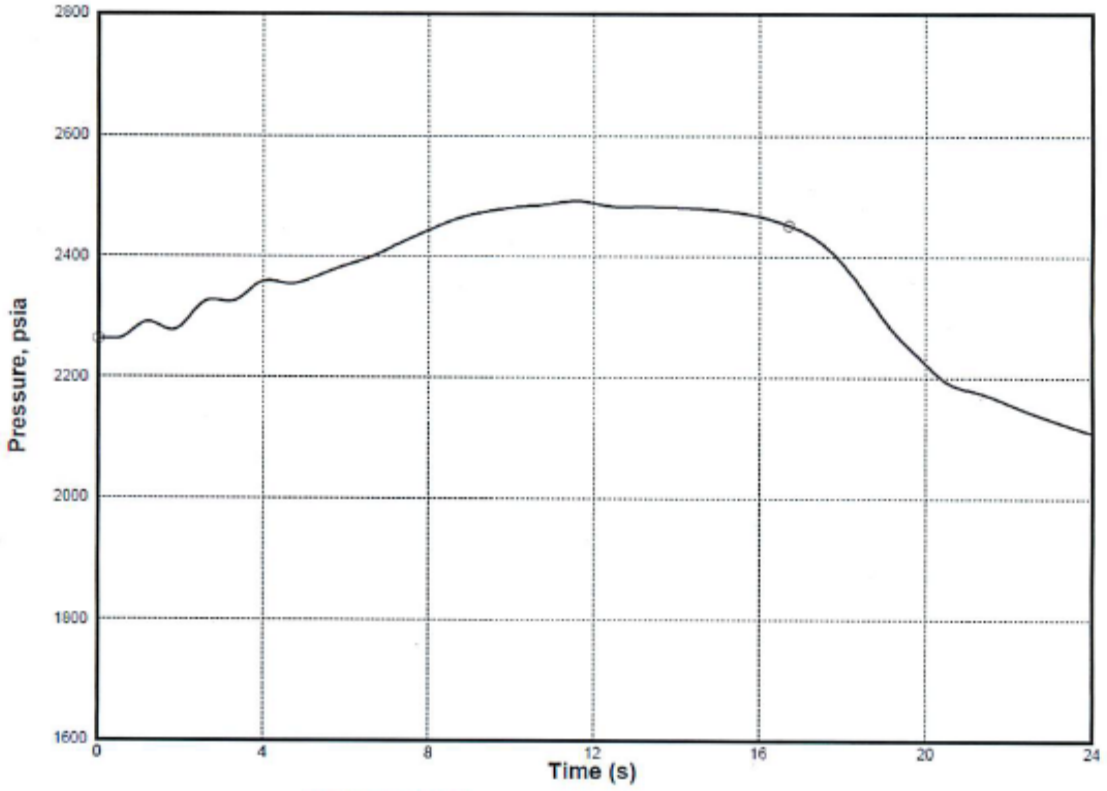

FIGURE 15.2.7-2b

Loss of Electric Load (Peak Secondary Pressure Case) Reactor Vessel Lower Plenum Pressure

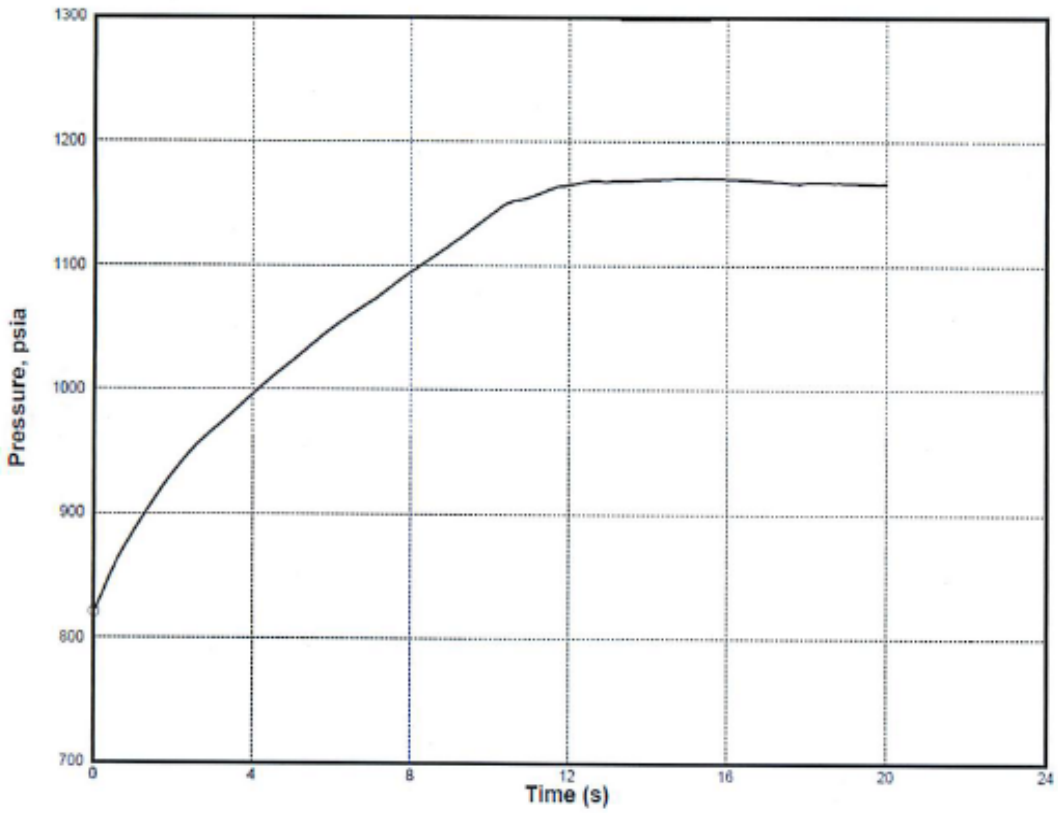

FIGURE 15.2.7-3a

Loss of Electric Load (Peak Primary Pressure Case) Steam Generator Downcomer Pressure

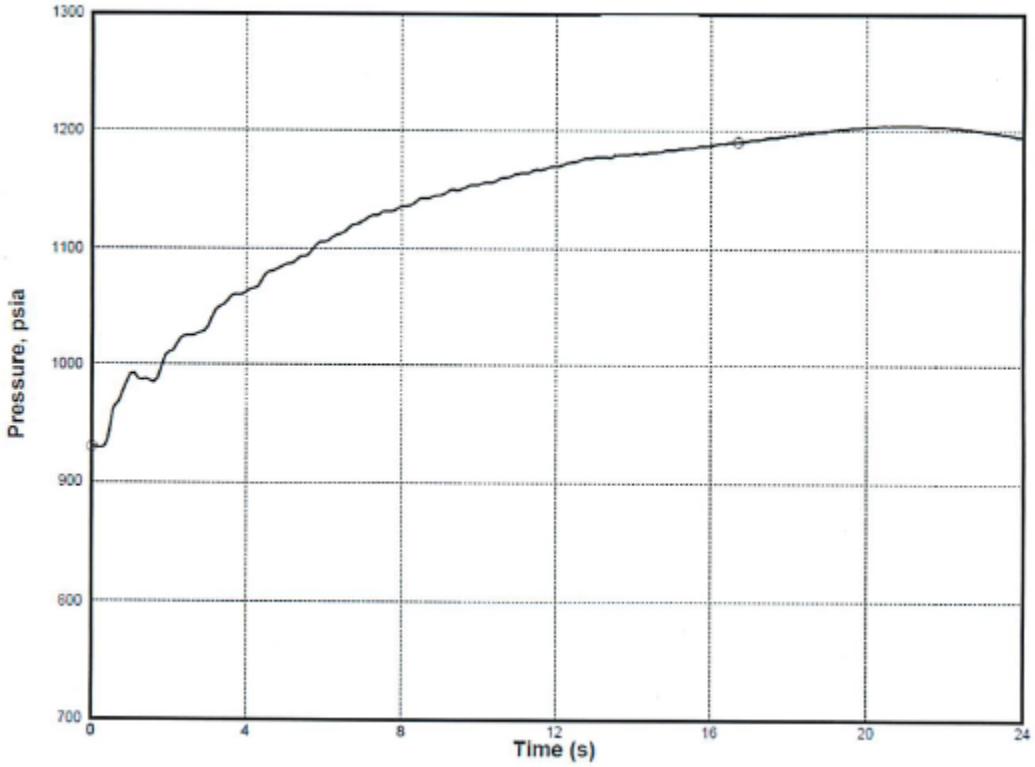

FIGURE 15.2.7-3b

Loss of Electric Load (Peak Secondary Pressure Case) Steam Generator Downcomer Pressure

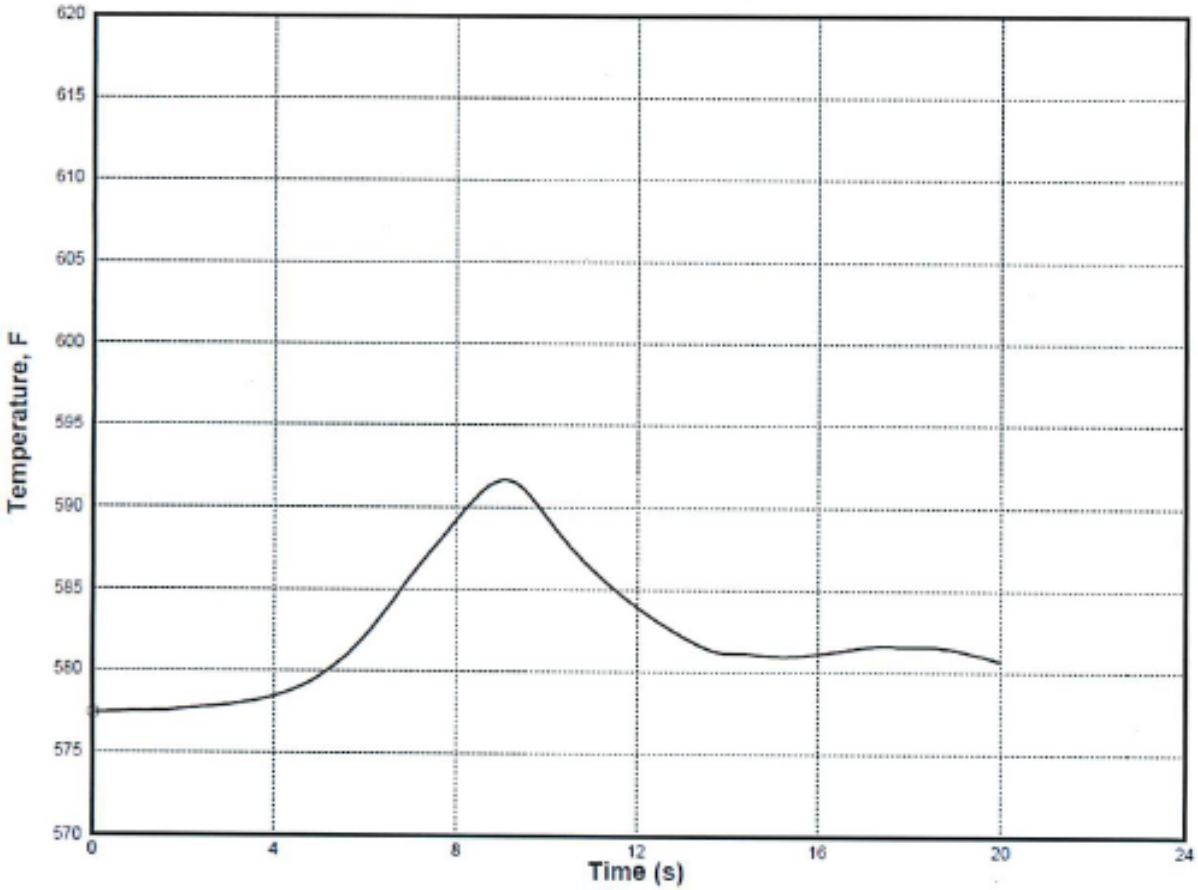

FIGURE 15.2.7-4a

Loss of Electric Load (Peak Primary Pressure Case) Average RCS Temperature

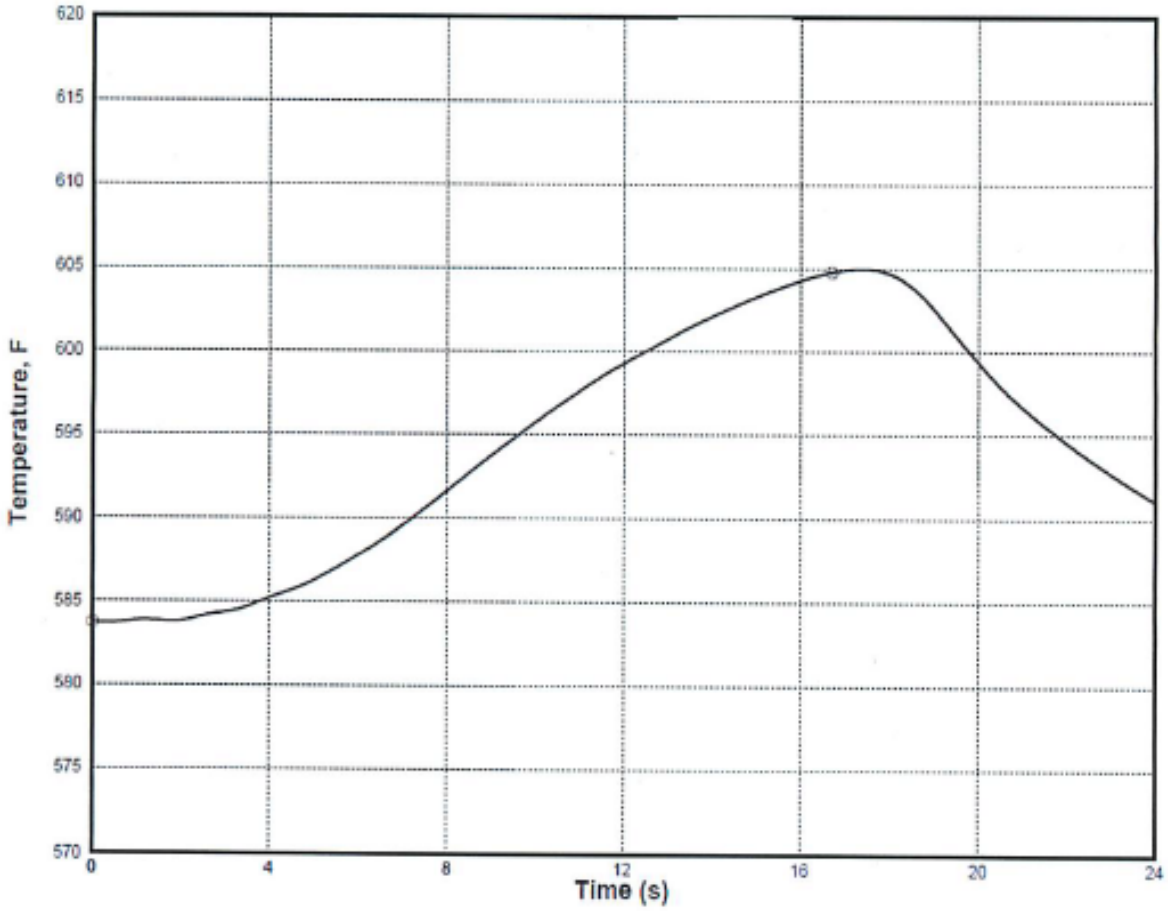

FIGURE 15.2.7-4b

Loss of Electric Load (Peak Secondary Pressure Case) Average RCS Temperature

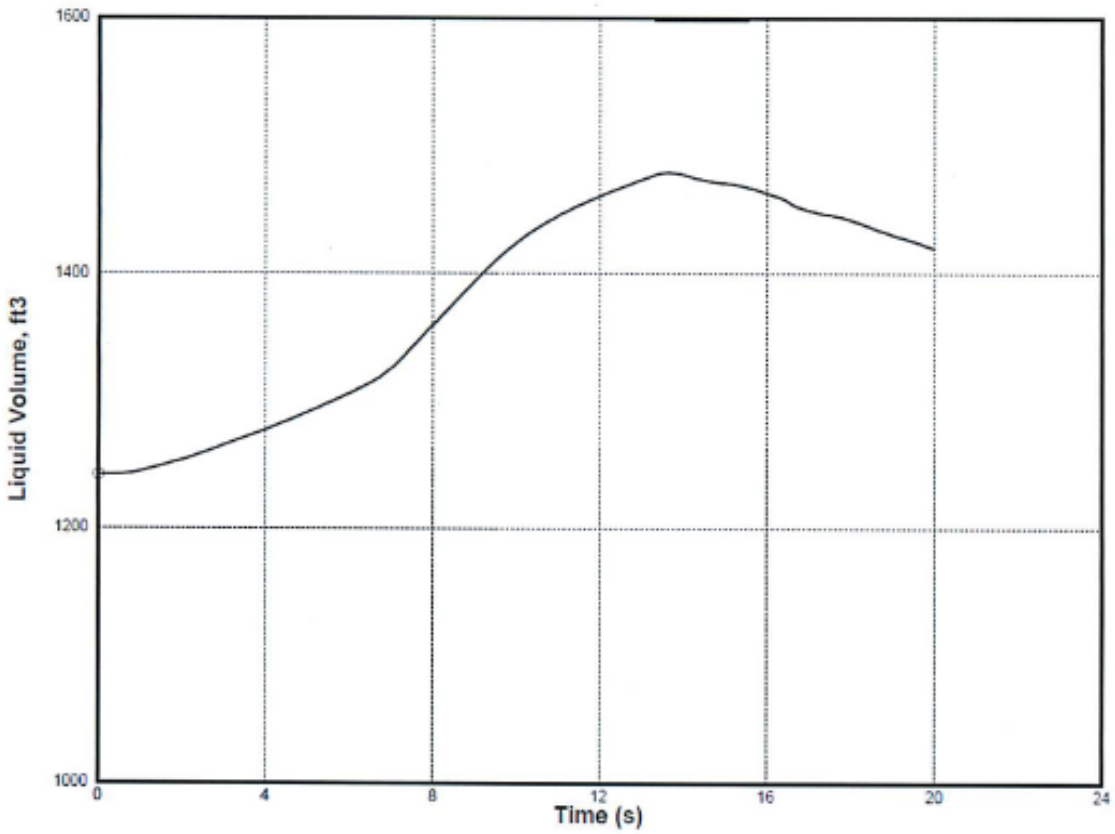

FIGURE 15.2.7-5a

Loss of Electric Load (Peak Primary Pressure Case) Pressurizer Water Volume

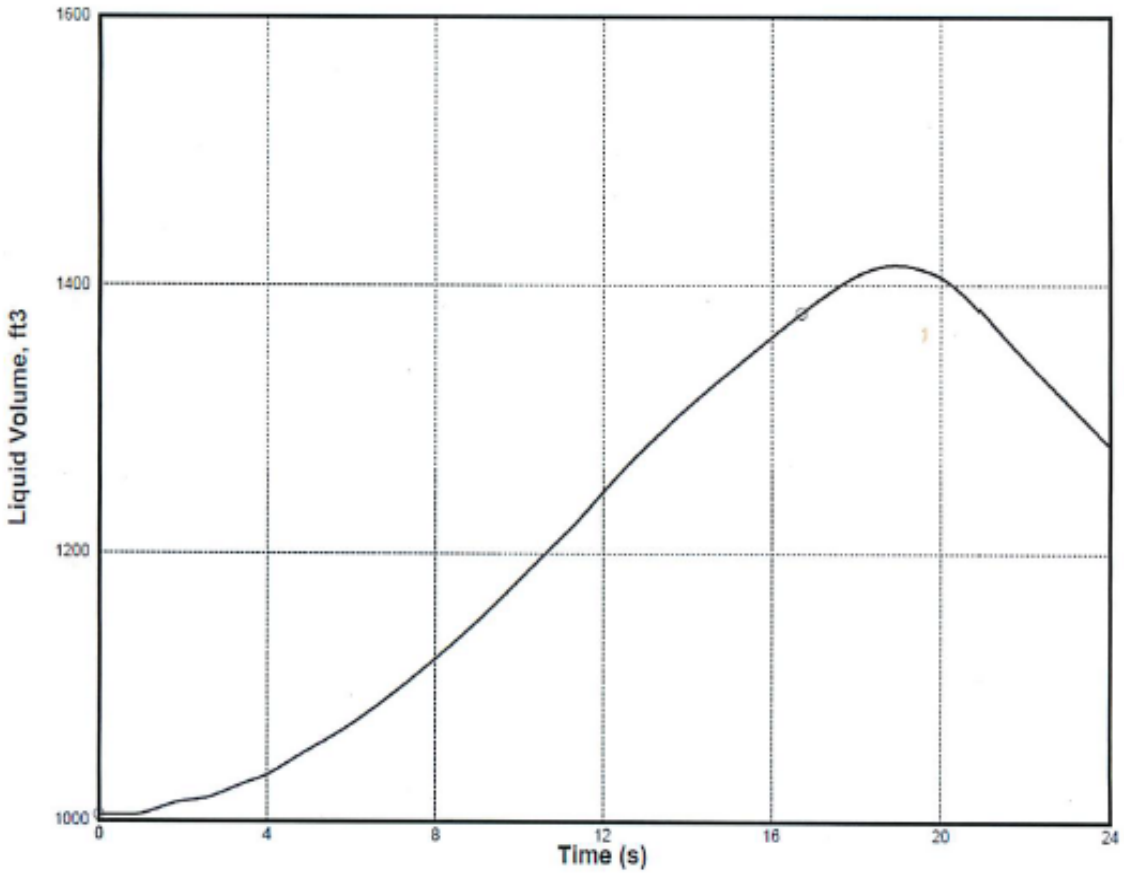

FIGURE 15.2.7-5b

Loss of Electric Load (Peak Secondary Pressure Case) Pressurizer Water Volume

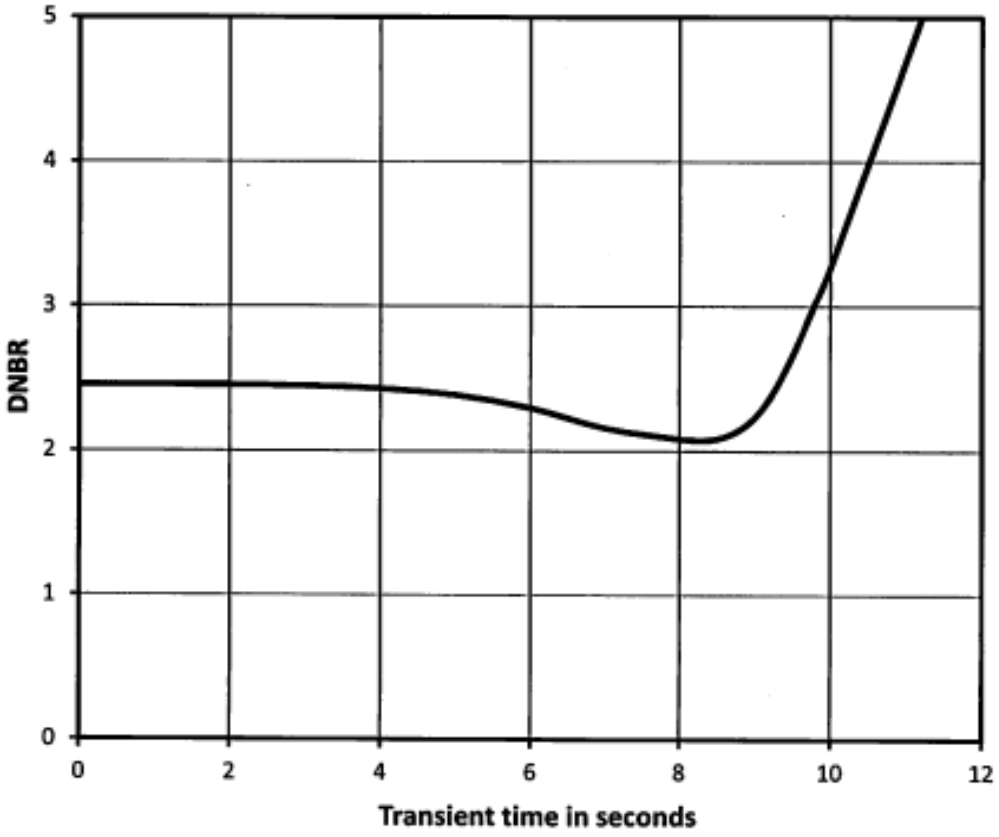

FIGURE 15.2.7-6a

Loss of Electric Load DNBR – Mark-BW Fuel

Figure 15.2.7-6b

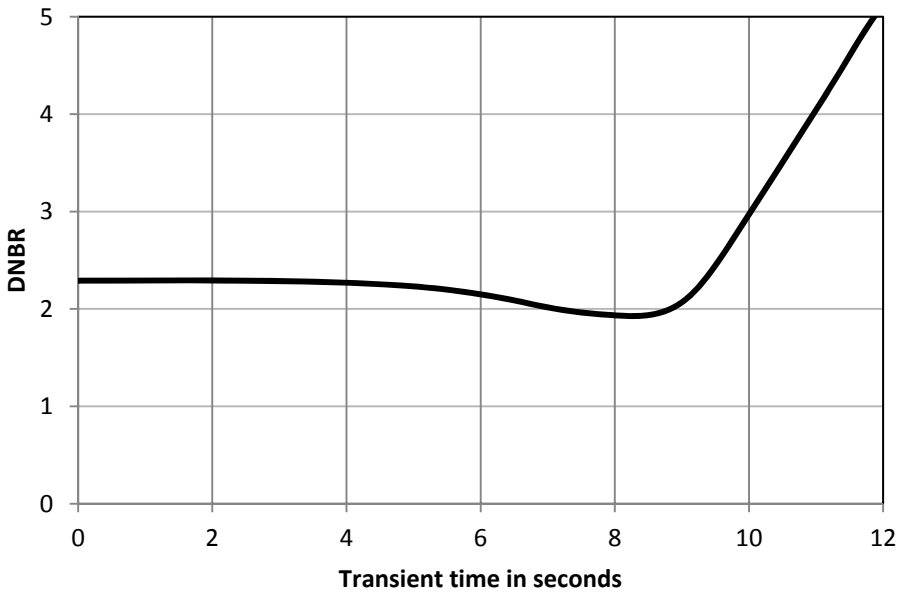

Loss of Electric Load DNBR – Advanced W17 HTP Fuel
(Peak Primary Pressure Case)

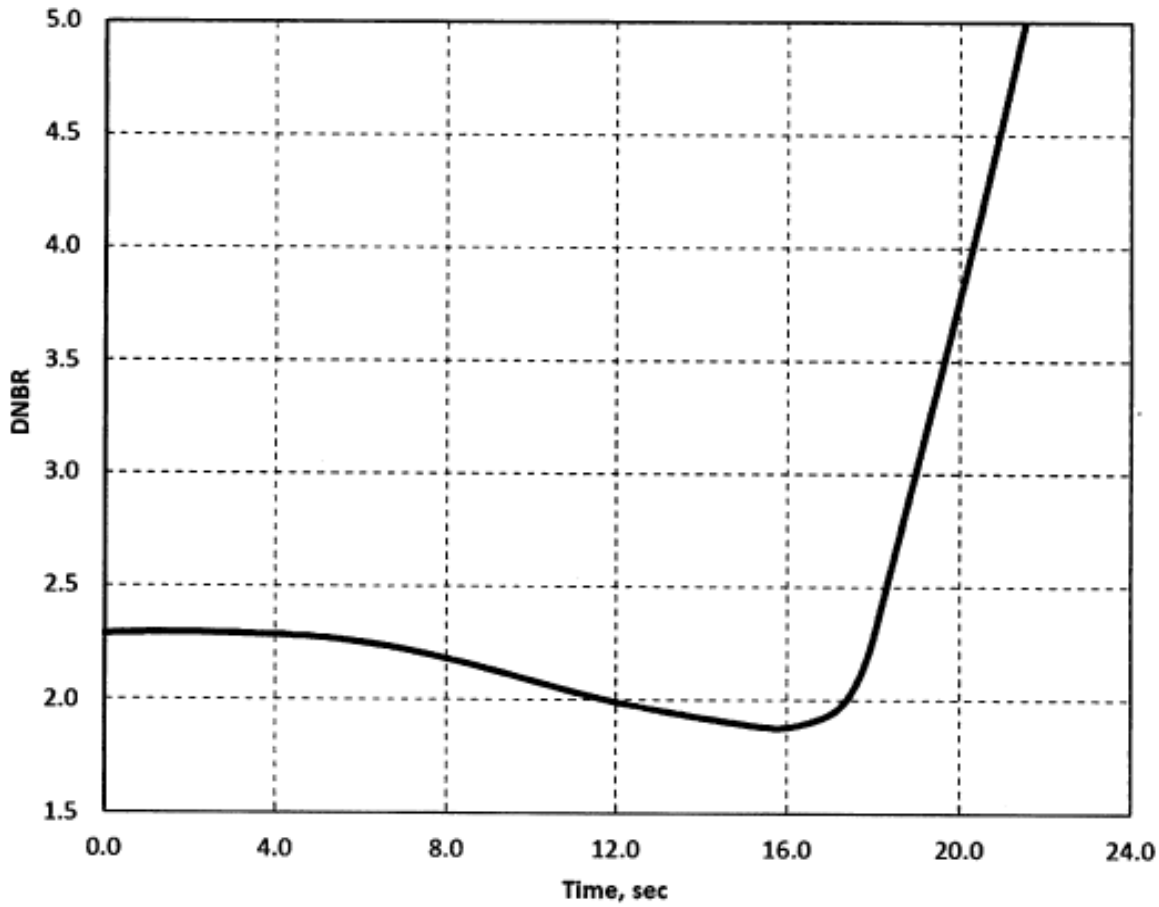

FIGURE 15.2.7-7

Loss of Electric Load (Peak Secondary Pressure Case)
DNBR – Advanced W17 HTP Fuel (Full Core and Transition Core)

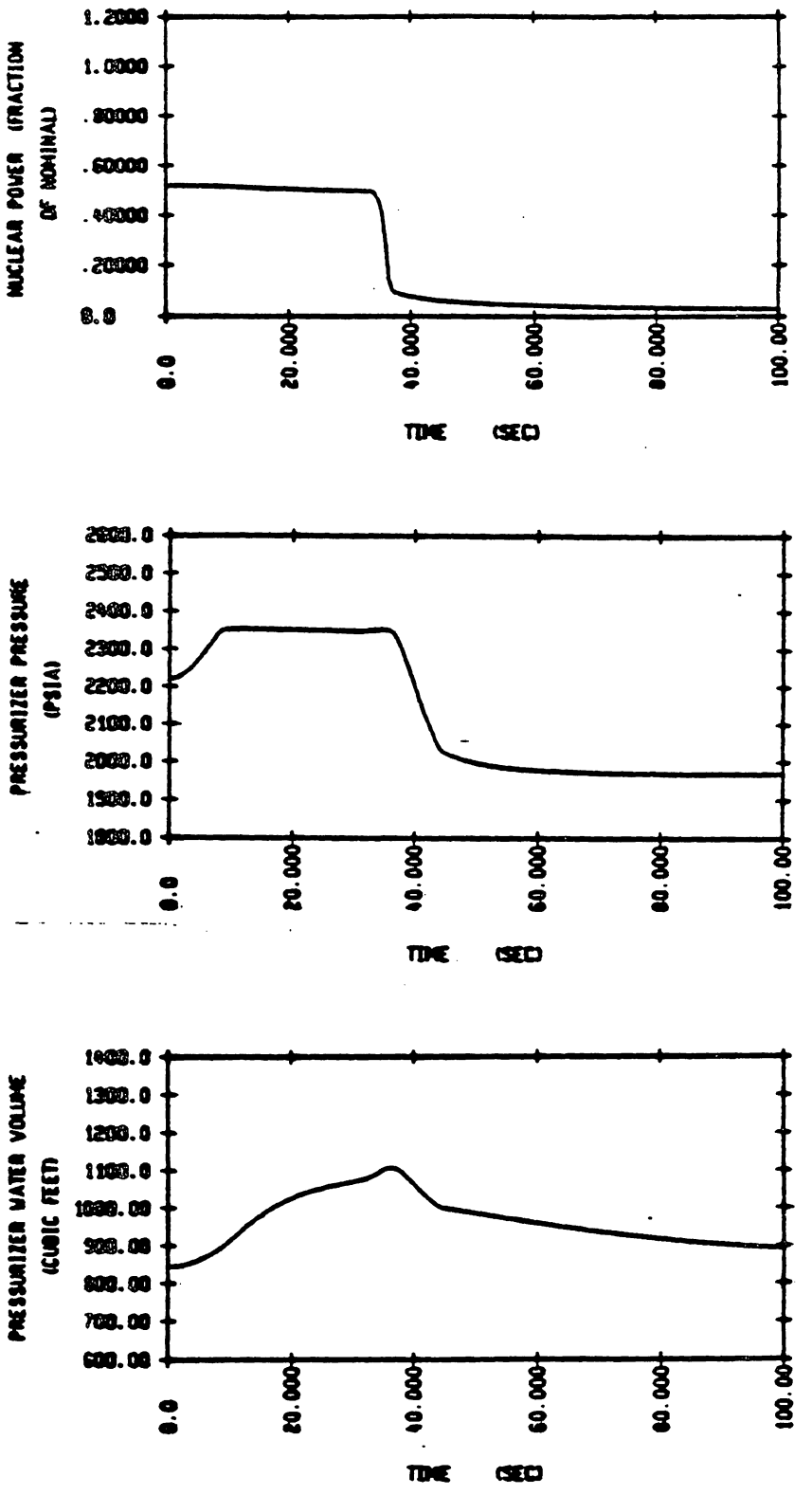

FIGURE 15.2.7-9 LOSS OF LOAD FROM 52% POWER WITH PRESSURE CONTROL, MINIMUM FEEDBACK

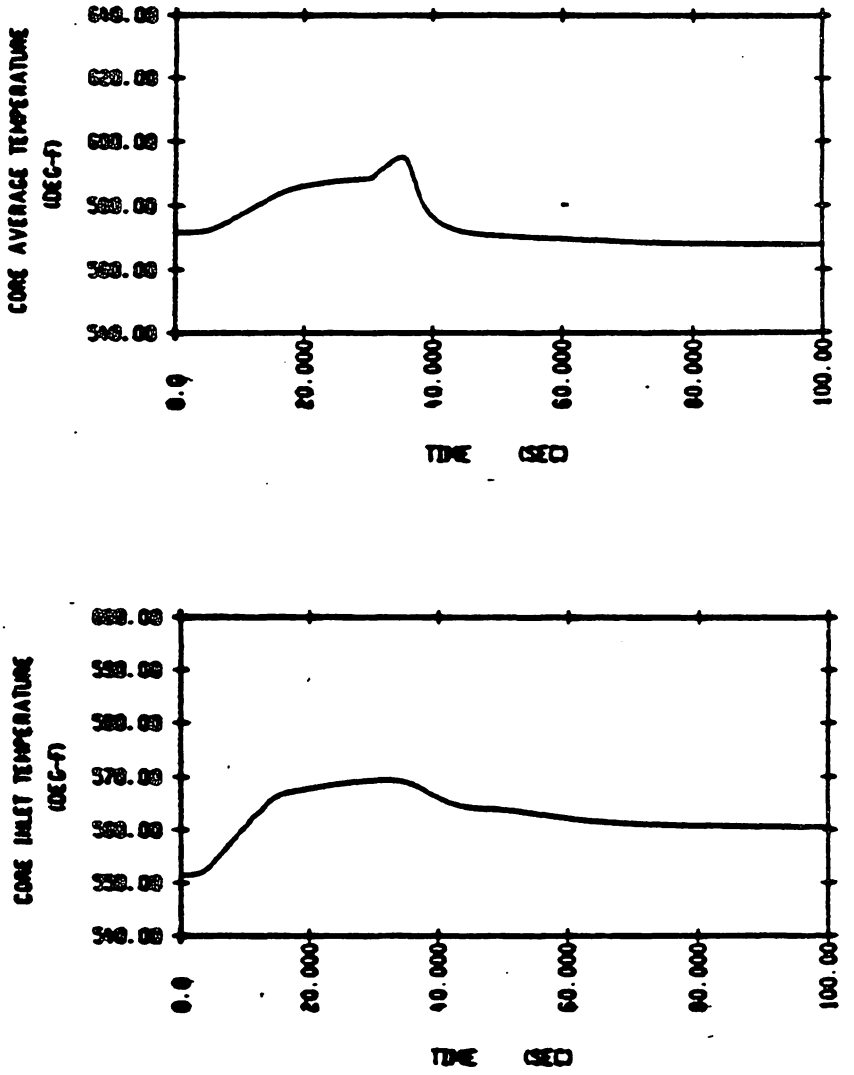

FIGURE 15.2.7-10 LOSS OF LOAD FROM 52% POWER WITH PRESSURE CONTROL, MINIMUM FEEDBACK

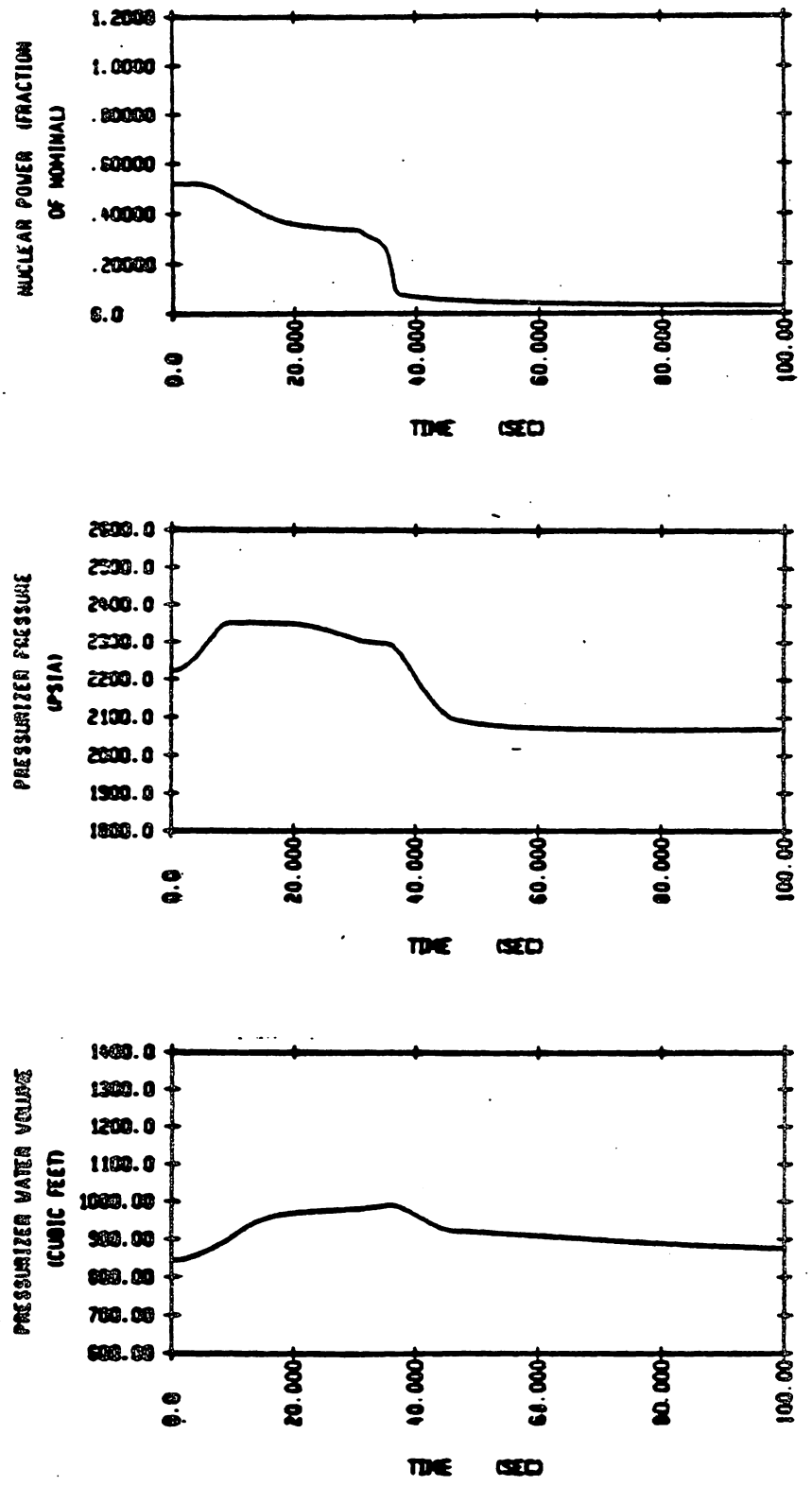

FIGURE 15.2.7-11 LOSS OF LOAD FROM 52% POWER WITH PRESSURE CONTROL, MAXIMUM FEEDBACK

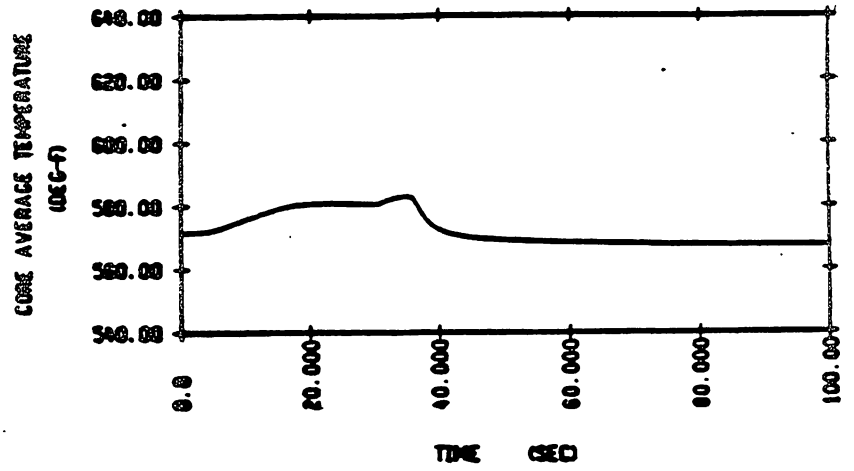

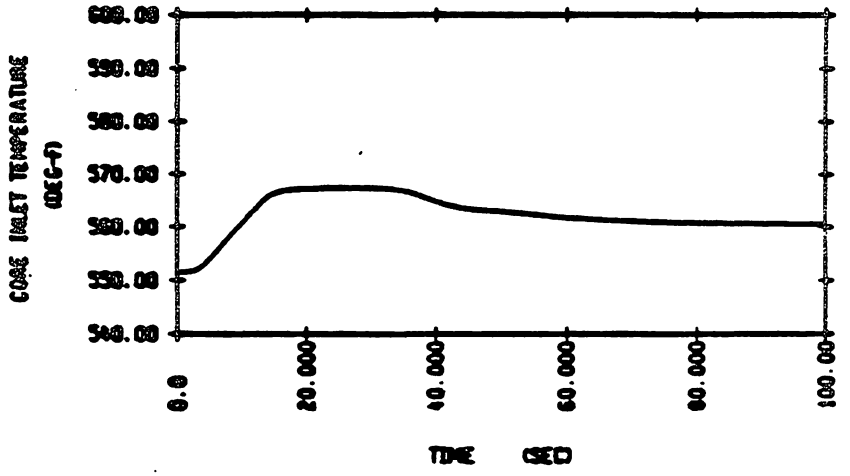

FIGURE 15.2.7-12 LOSS OF LOAD FROM 52% POWER WITH PRESSURE CONTROL, MAXIMUM FEEDBACK

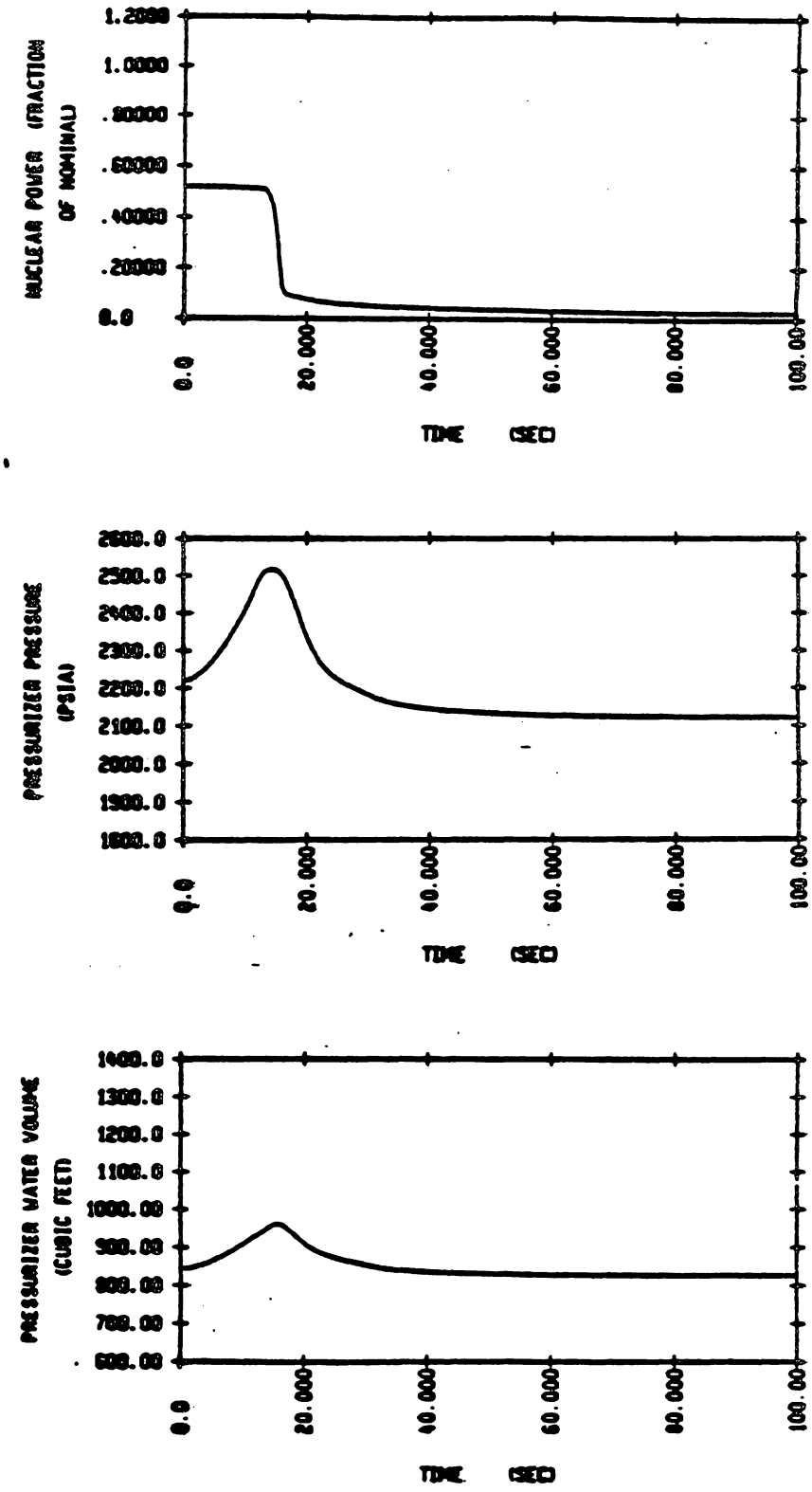

FIGURE 15.2.7-13 LOSS OF LOAD FROM 52% POWER WITHOUT PRESSURE CONTROL, MINIMUM FEEDBACK

Revised by Amendment 1

1

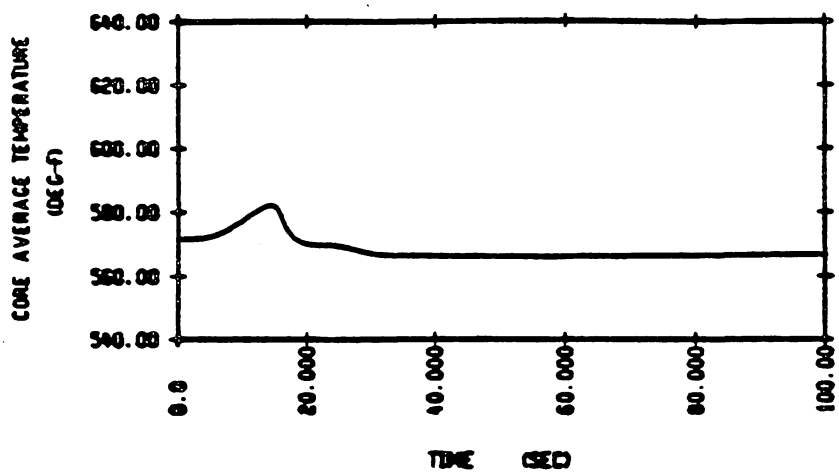

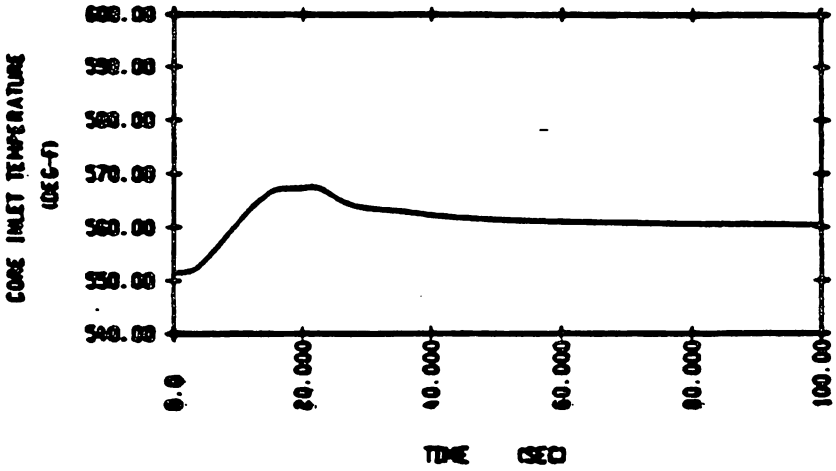

FIGURE 15.2.7-14 LOSS OF LOAD FROM 52% POWER WITHOUT PRESSURE CONTROL, MINIMUM FEEDBACK | 1

Revised by Amendment 1

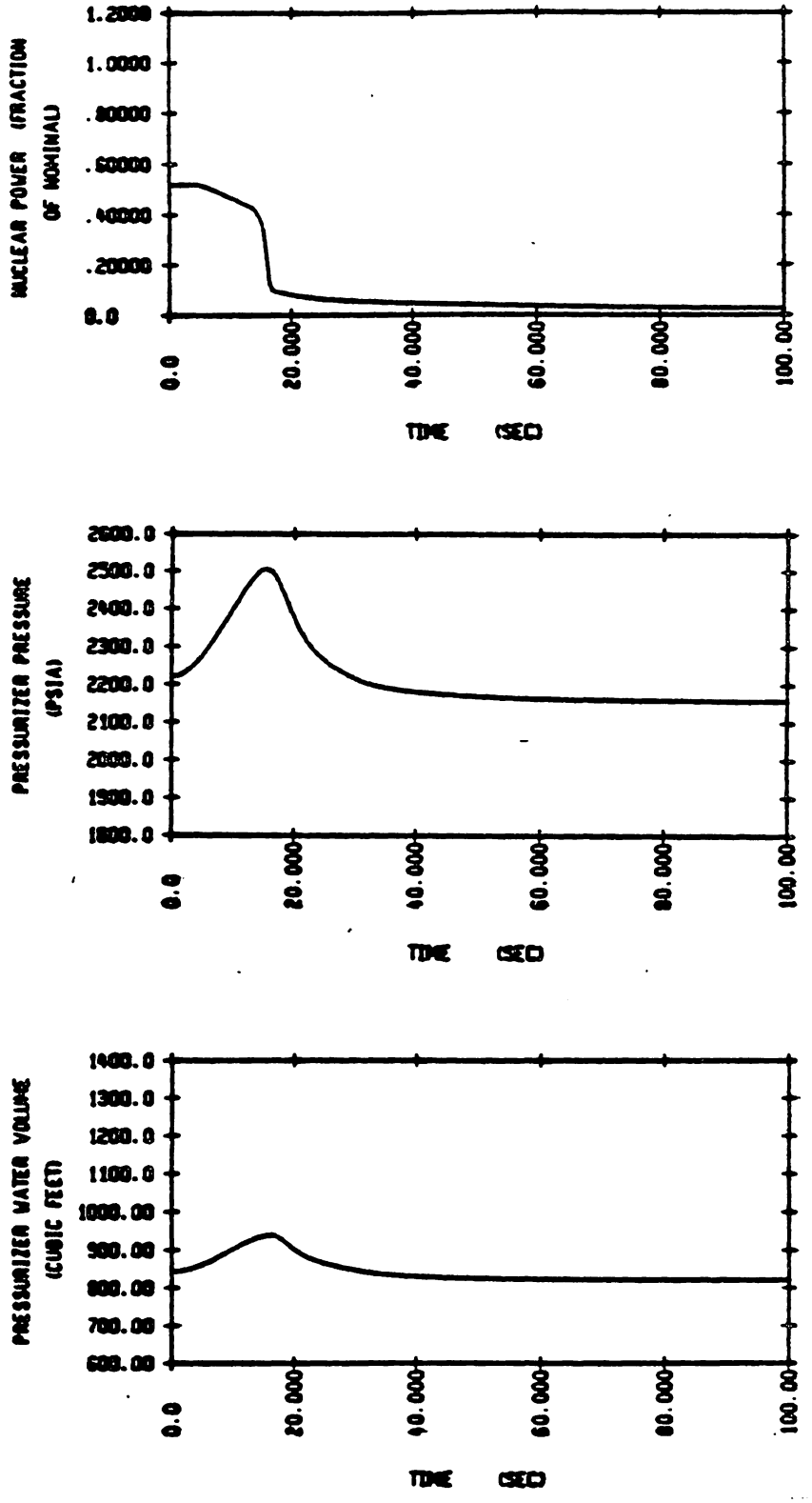

FIGURE 15.2.7-15 LOSS OF LOAD FROM 52% POWER WITHOUT PRESSURE CONTROL, MAXIMUM FEEDBACK 1

Revised by Amendment 1

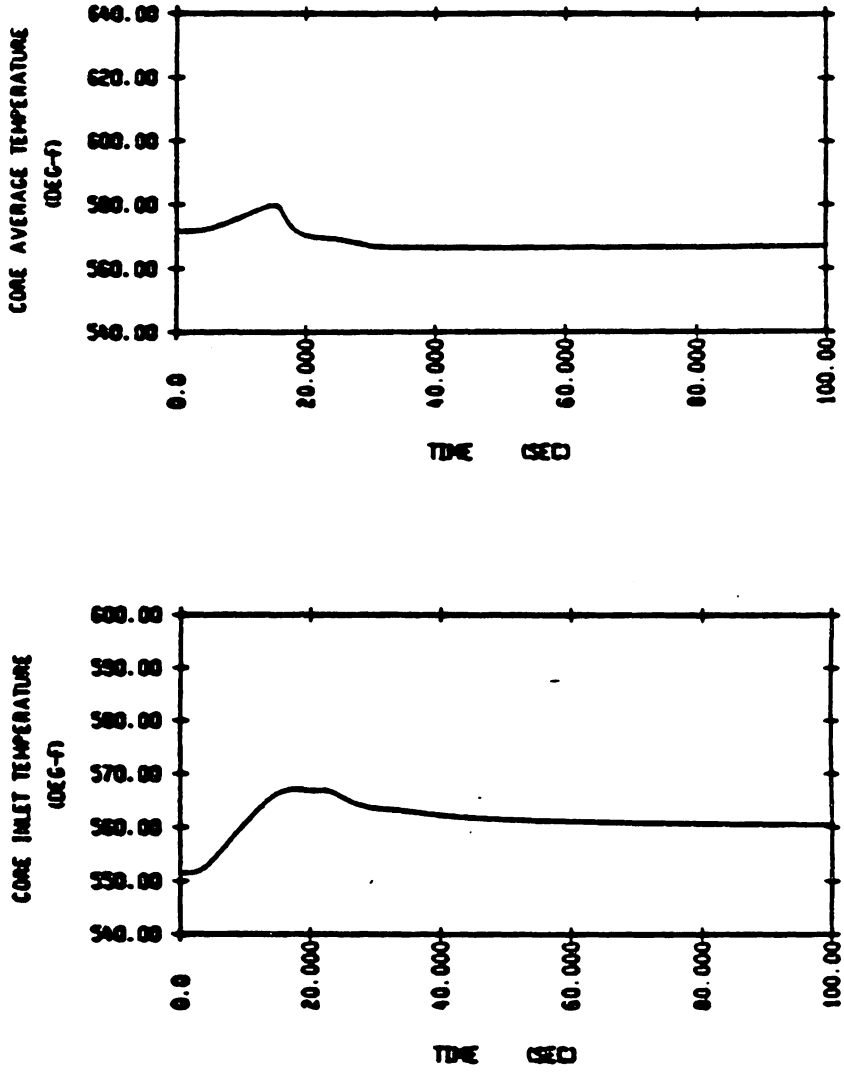

FIGURE 15.2.7-16 LOSS OF LOAD FROM 52% POWER WITHOUT PRESSURE CONTROL, MAXIMUM FEEDBACK | 1

Revised by Amendment 1

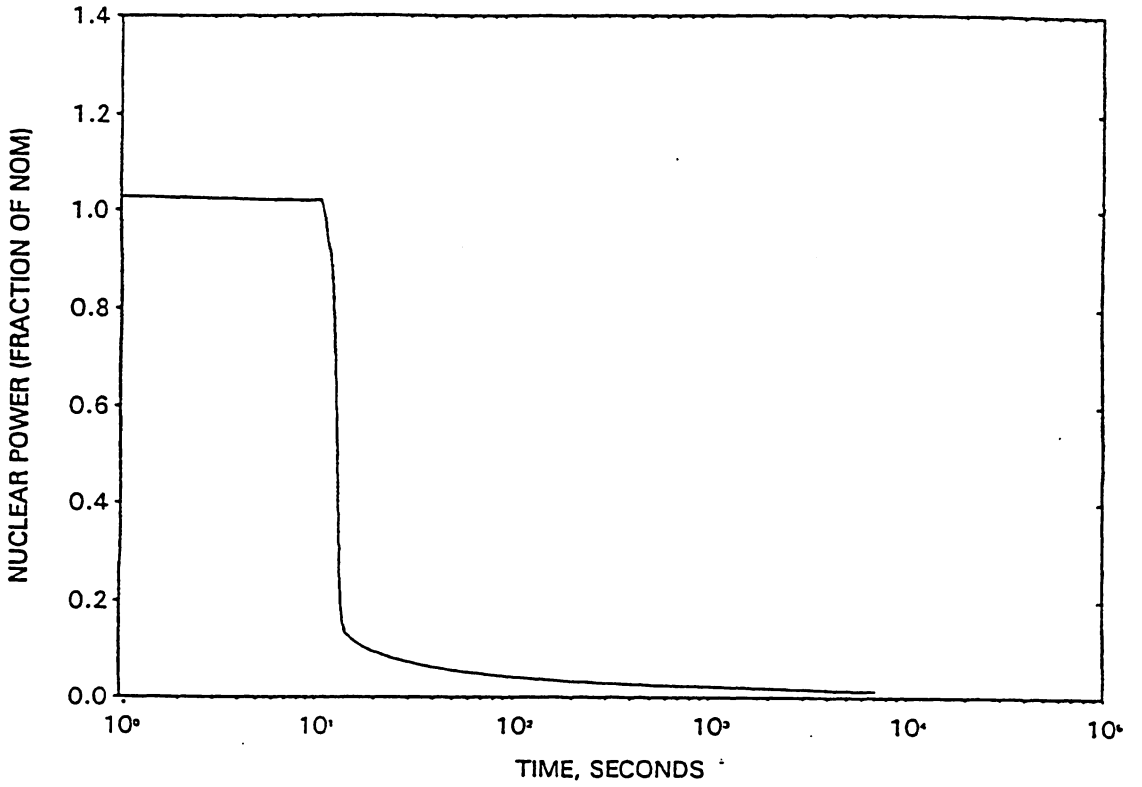

FIGURE 15.2.8-1a FULL POWER LOSS OF NORMAL FEEDWATER - NUCLEAR POWER

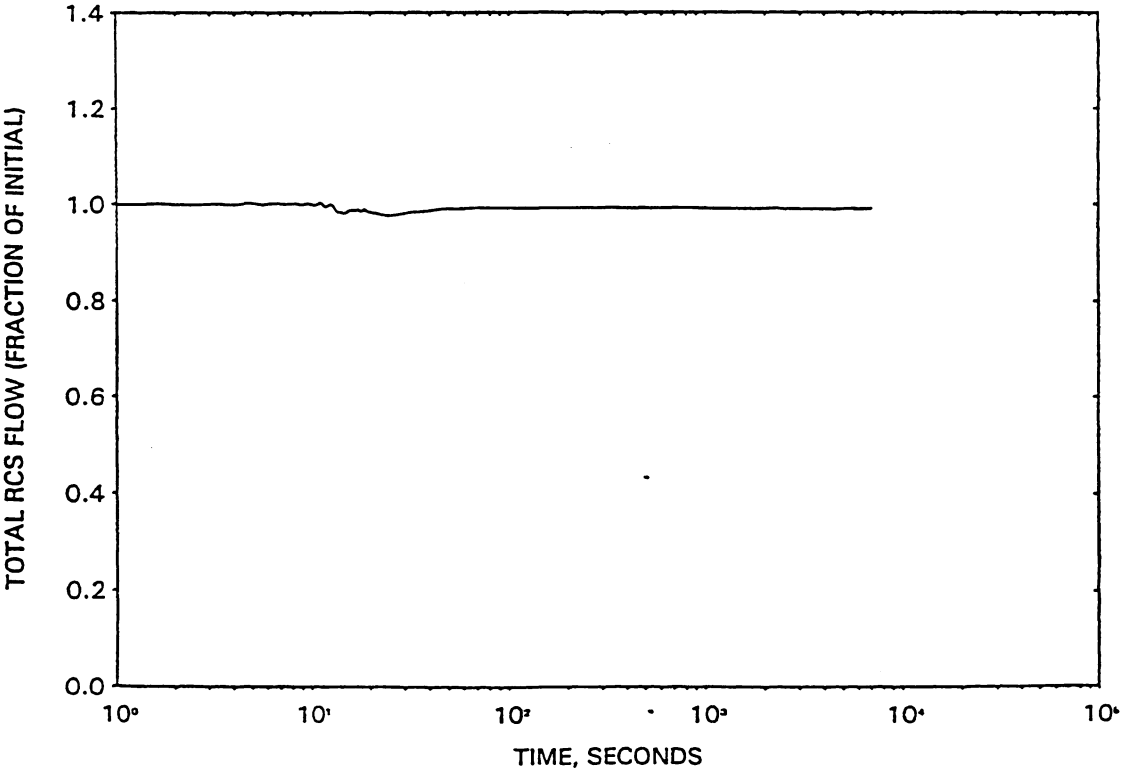

FIGURE 15.2.8-1b FULL POWER LOSS OF NORMAL FEEDWATER - RCS FLOW

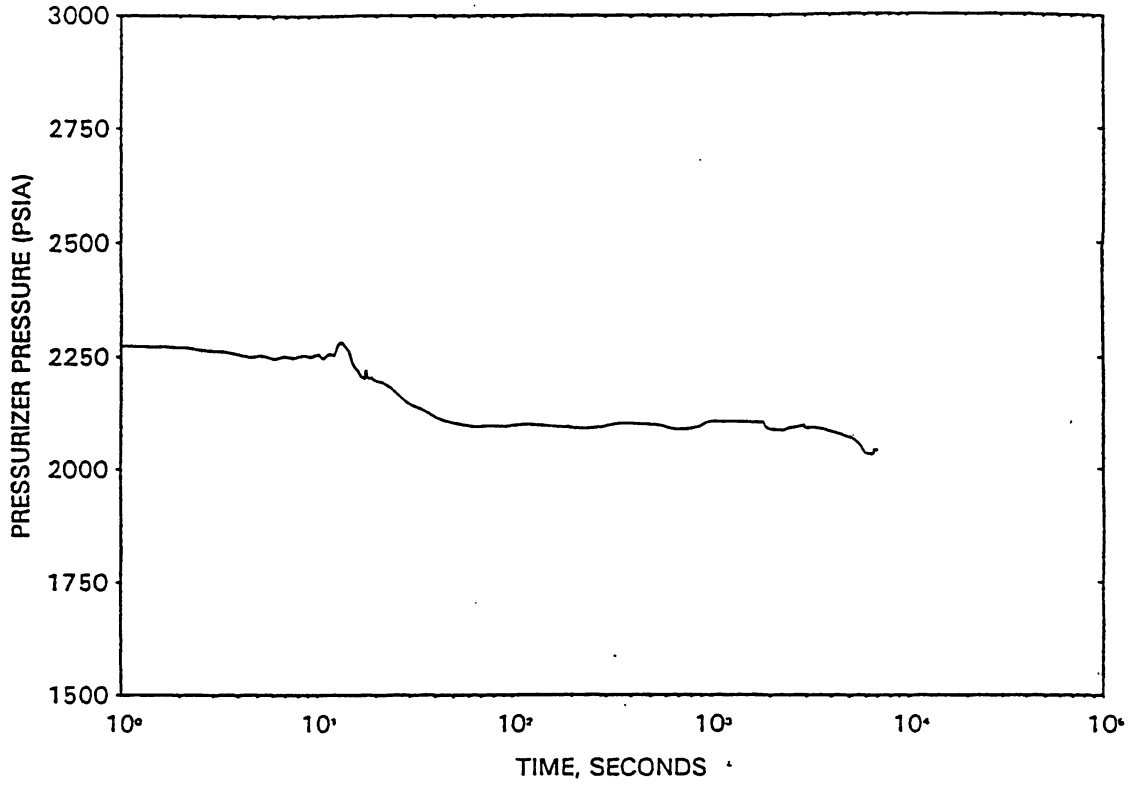

FIGURE 15.2.8-2a FULL POWER LOSS OF NORMAL FEEDWATER - PRESSURIZER PRESSURE

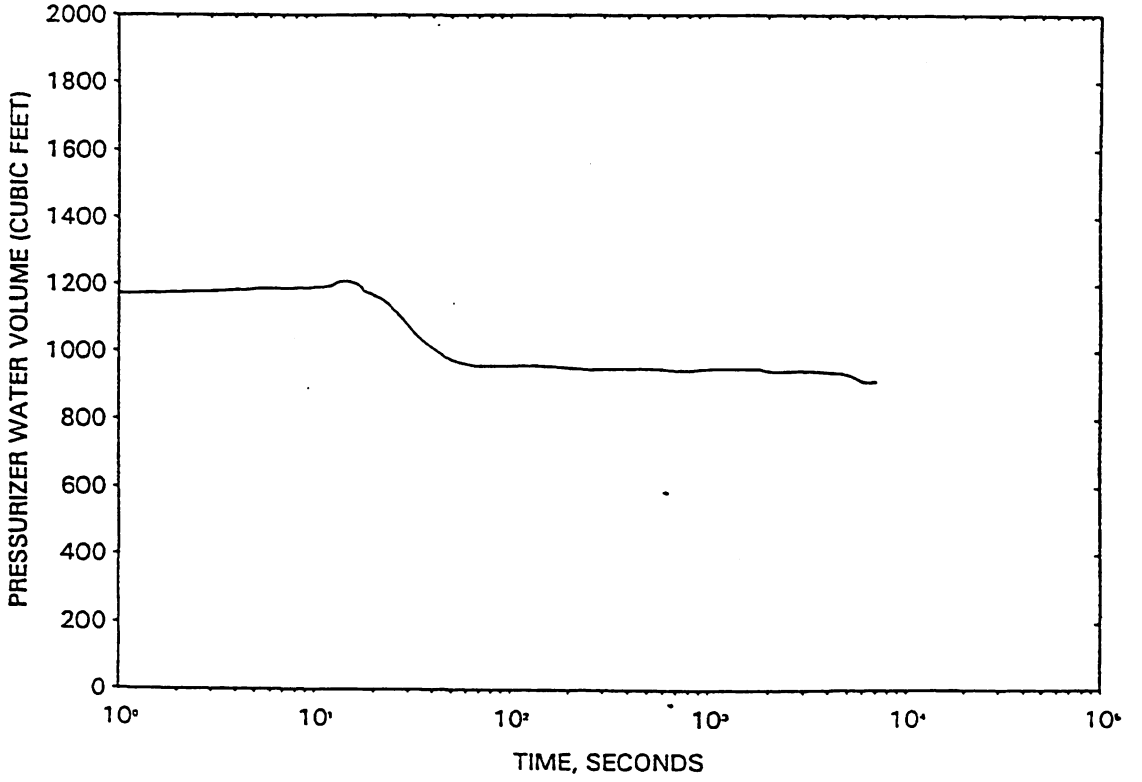

FIGURE 15.2.8-2b FULL POWER LOSS OF NORMAL FEEDWATER - PRESSURIZER WATER VOLUME

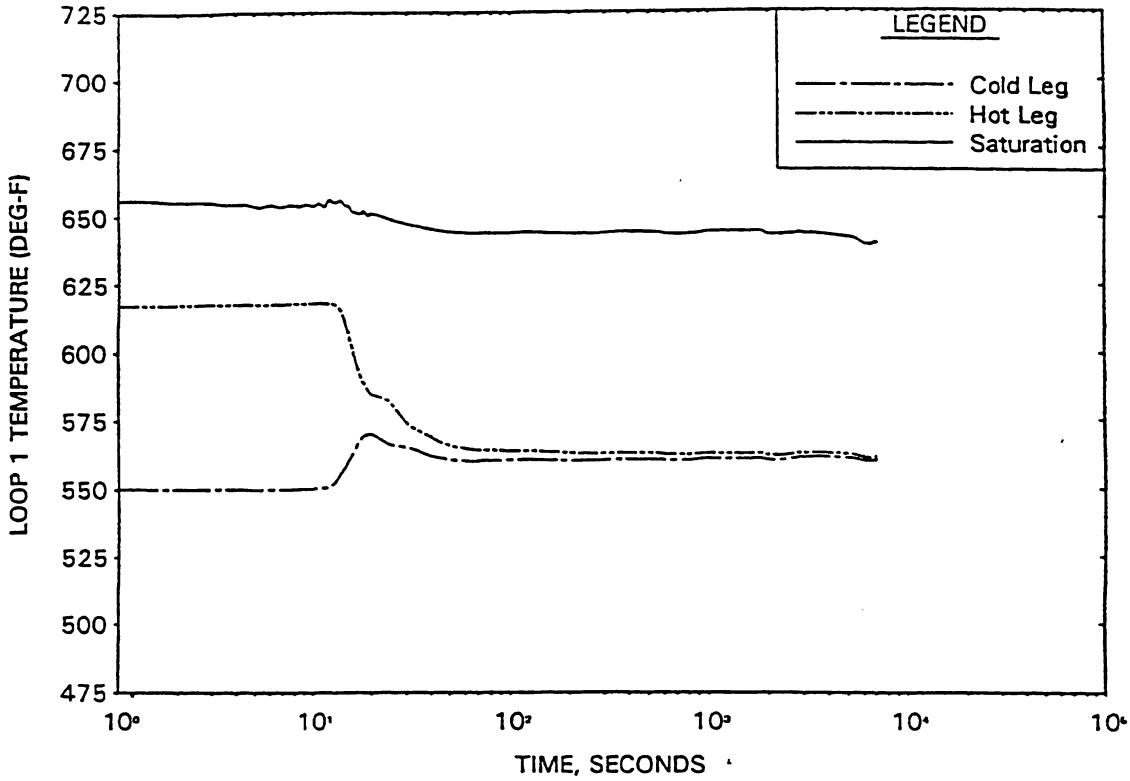

FIGURE 15.2.8-3a FULL POWER LOSS OF NORMAL FEEDWATER - LOOP 1 COLD LEG, HOT LEG AND SATURATION TEMPERATURES

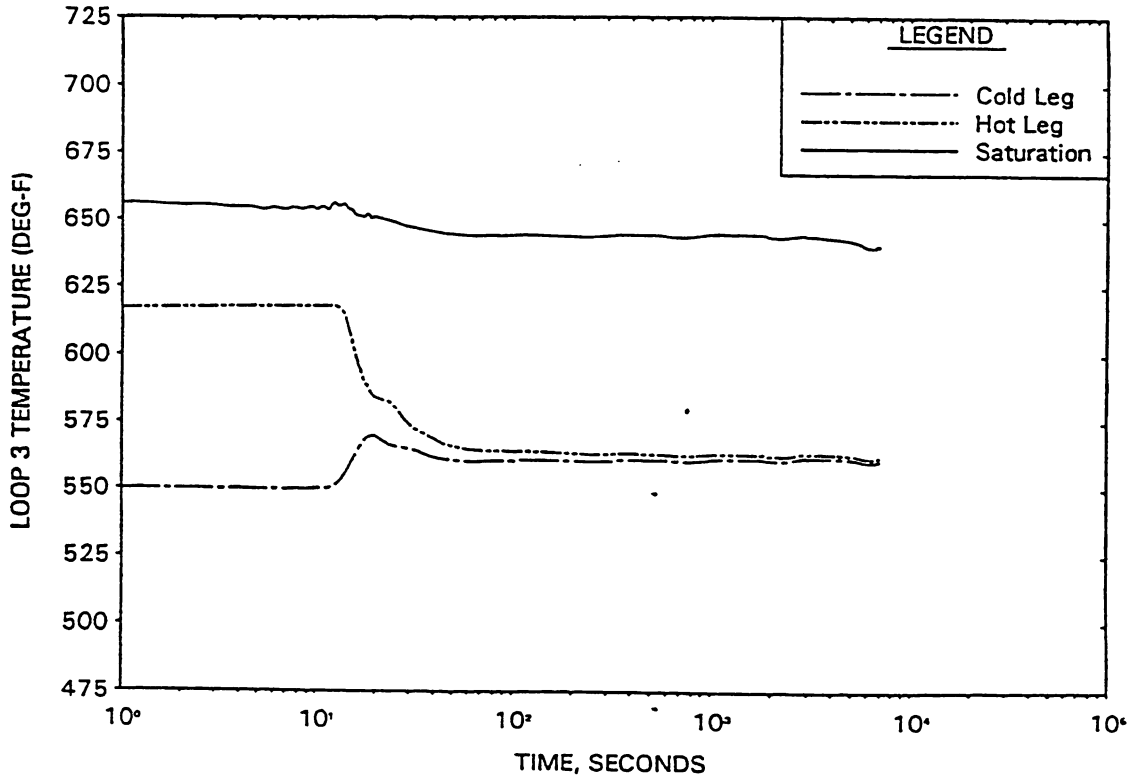

FIGURE 15.2.8-3b FULL POWER LOSS OF NORMAL FEEDWATER - LOOP 3 COLD LEG, HOT LEG AND SATURATION TEMPERATURES

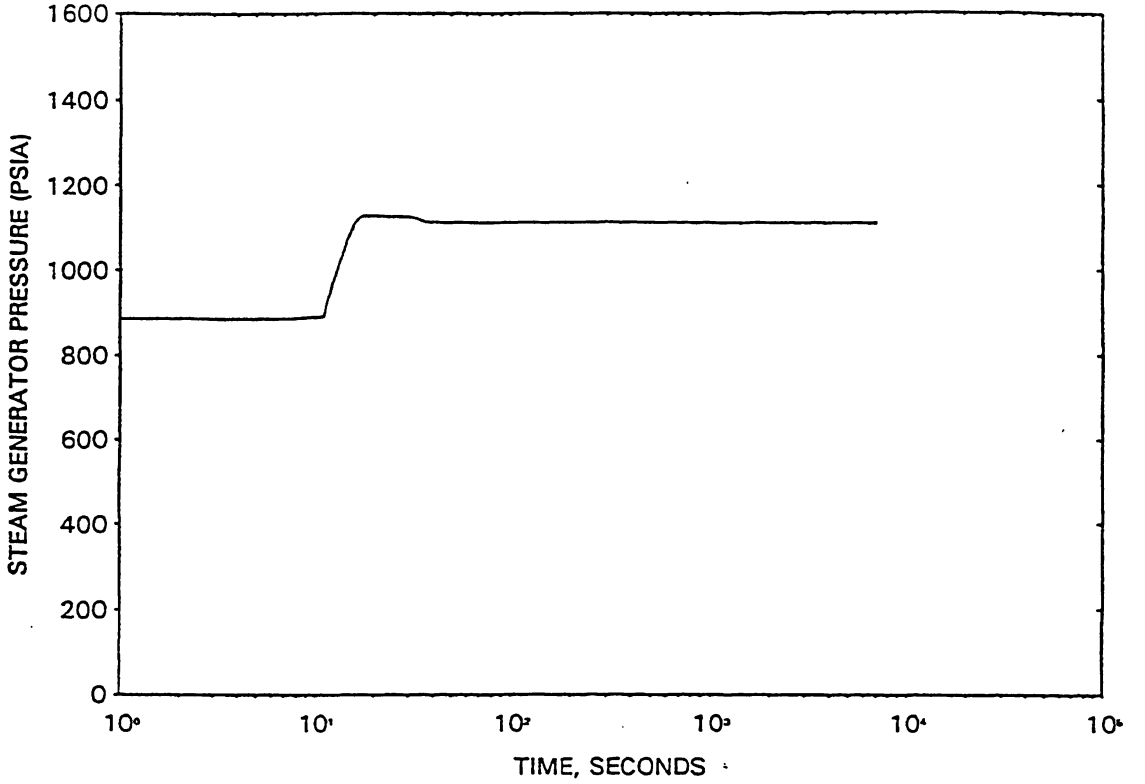

FIGURE 15.2.8-4a FULL POWER LOSS OF NORMAL FEEDWATER - STEAM GENERATOR PRESSURE

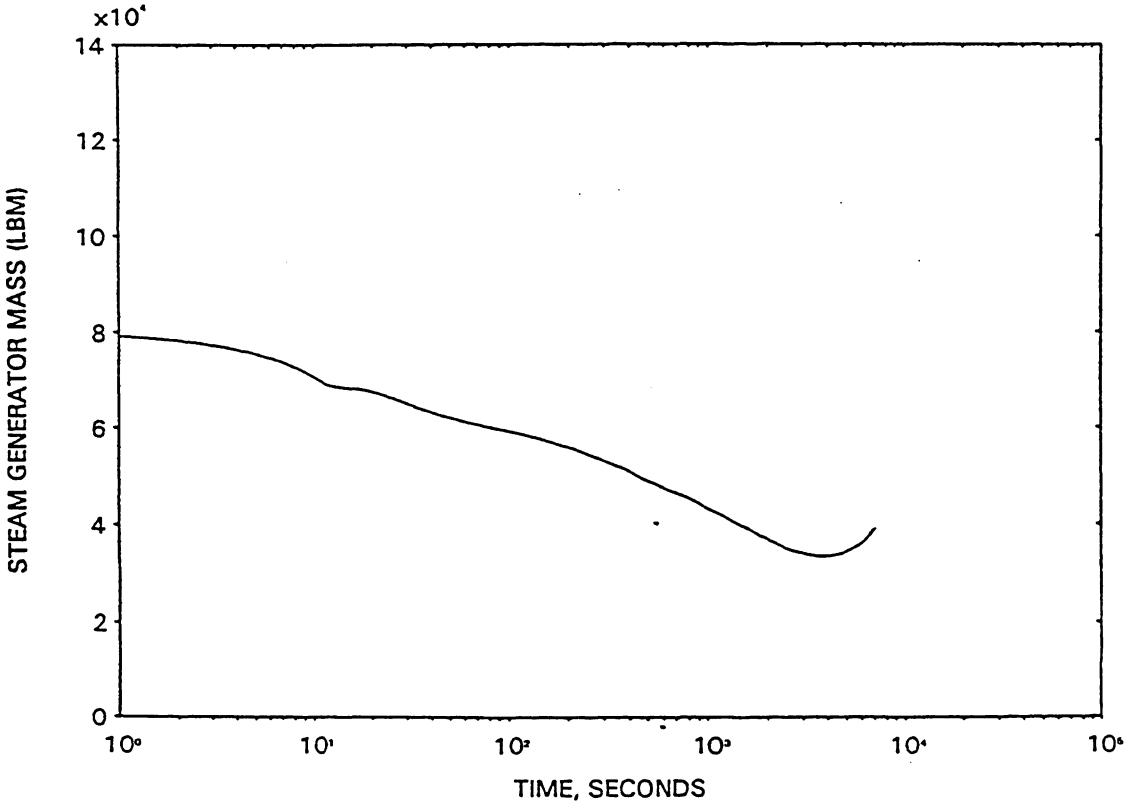

FIGURE 15.2.8-4b FULL POWER LOSS OF NORMAL FEEDWATER - STEAM GENERATOR MASS

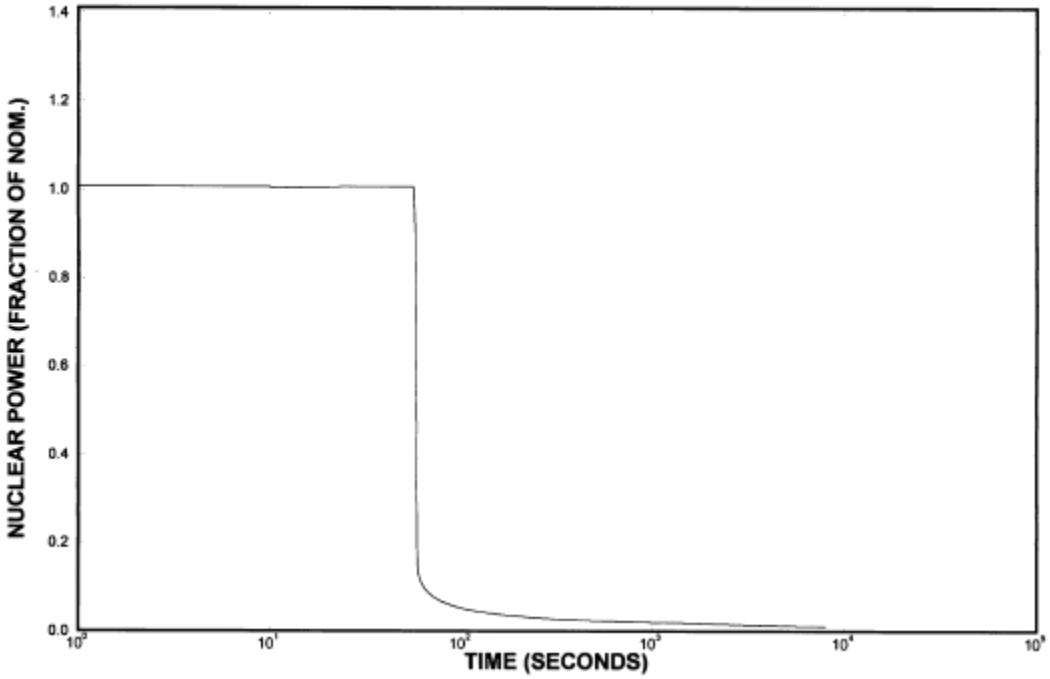

FIGURE 15.2.9-1a LOSS OF OFFSITE POWER TO THE STATION AUXILIARIES – NUCLEAR POWER

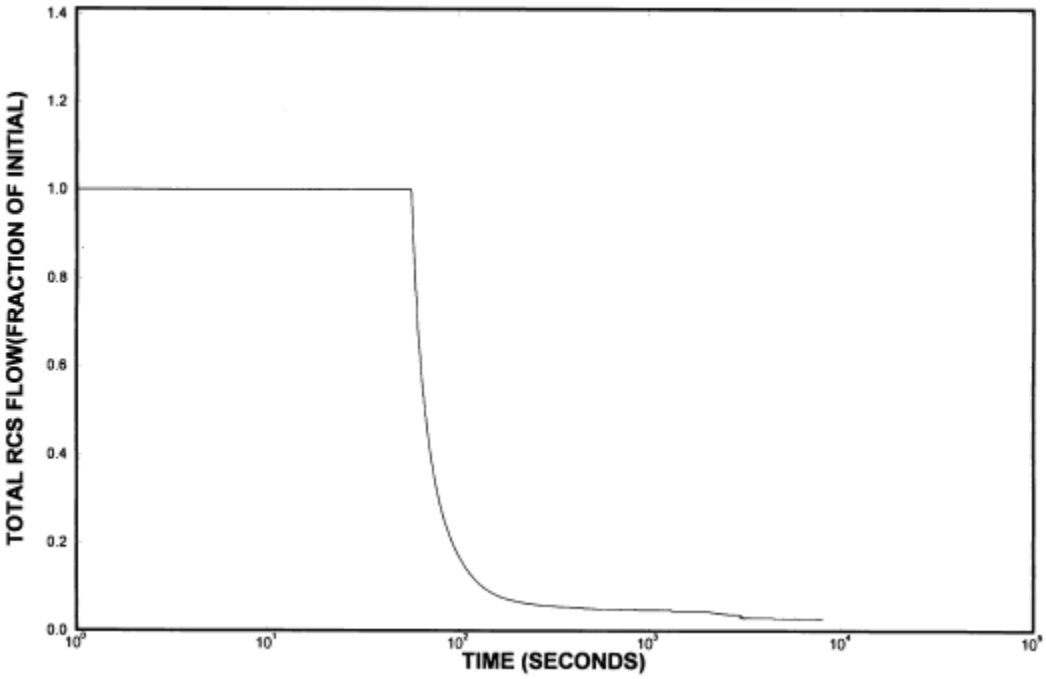

FIGURE 15.2.9-1b LOSS OF OFFSITE POWER TO THE STATION AUXILIARIES – RCS FLOW

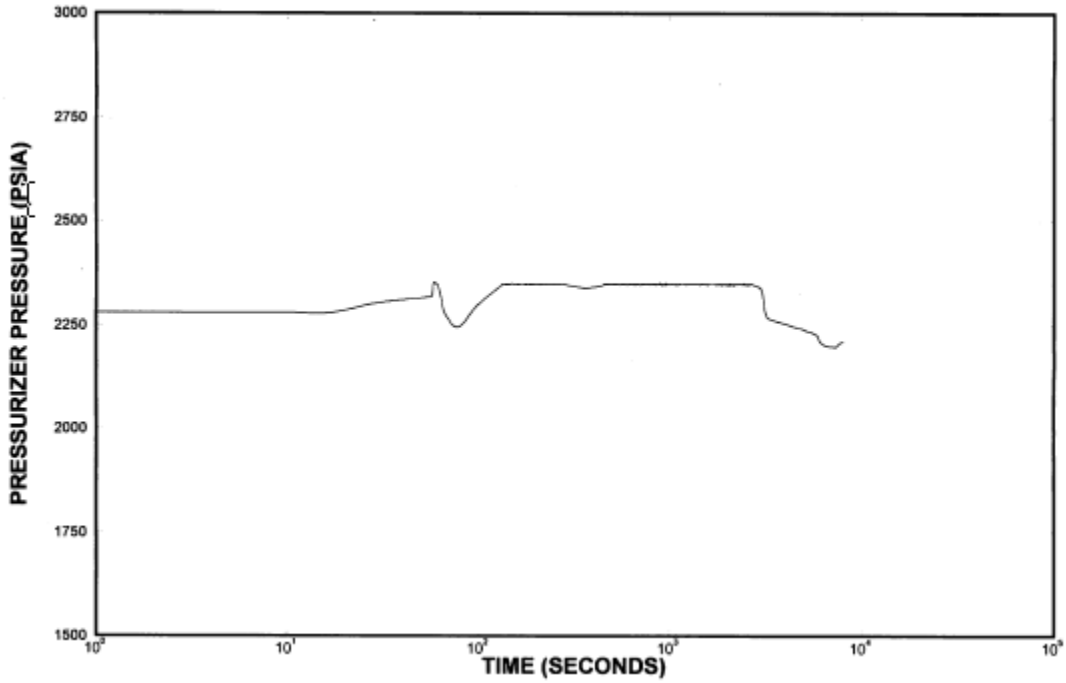

FIGURE 15.2.9-2a LOSS OF OFFSITE POWER TO THE STATION AUXILIARIES – PRESSURIZER PRESSURE

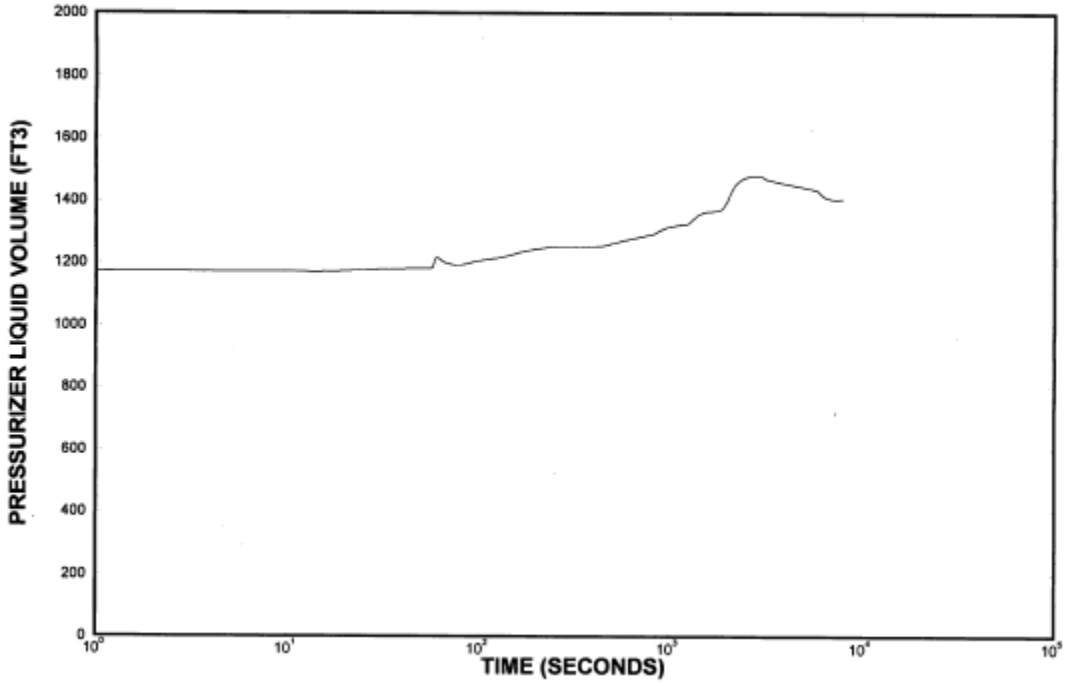

FIGURE 15.2.9-2b LOSS OF OFFSITE POWER TO THE STATION AUXILIARIES – PRESSURIZER WATER VOLUME

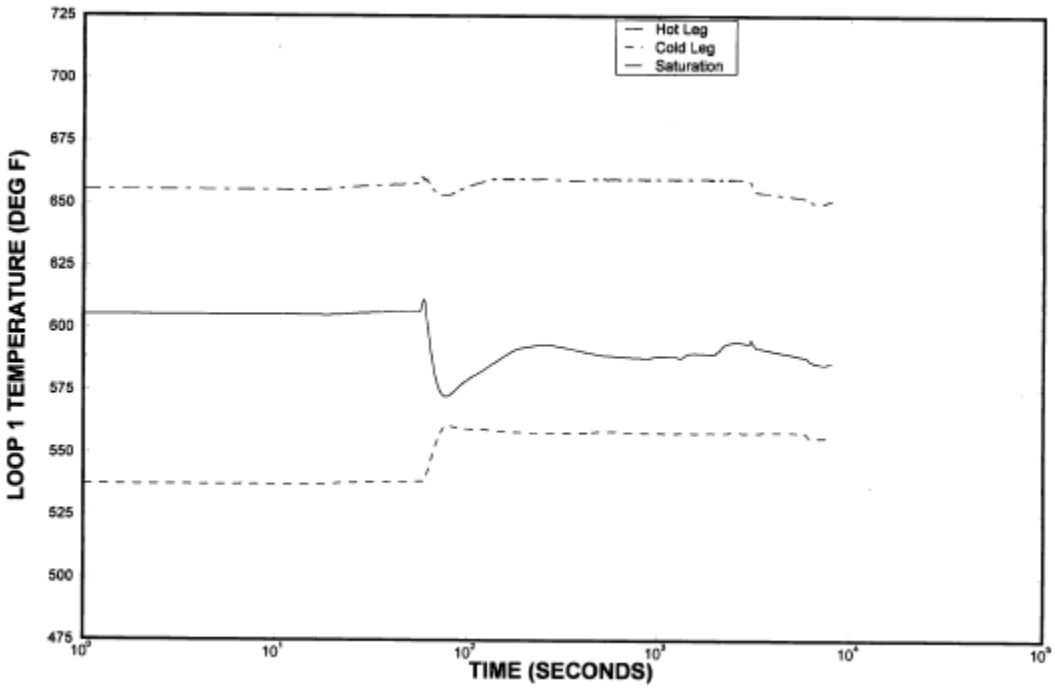

FIGURE 15.2.9-3a LOSS OF OFFSITE POWER TO THE STATION AUXILIARIES — LOOP 1 COLD LEG, HOT LEG, AND SATURATION TEMPERATURES

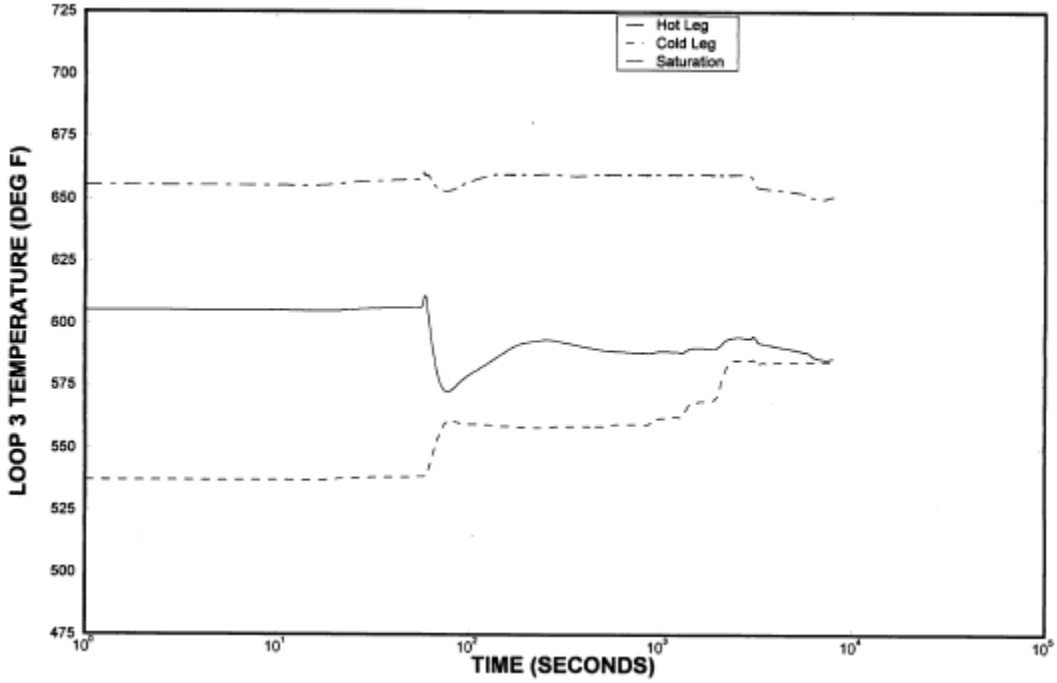

FIGURE 15.2.9-3b LOSS OF OFFSITE POWER TO THE STATION AUXILIARIES — LOOP 3 COLD LEG, HOT LEG, AND SATURATION TEMPERATURES

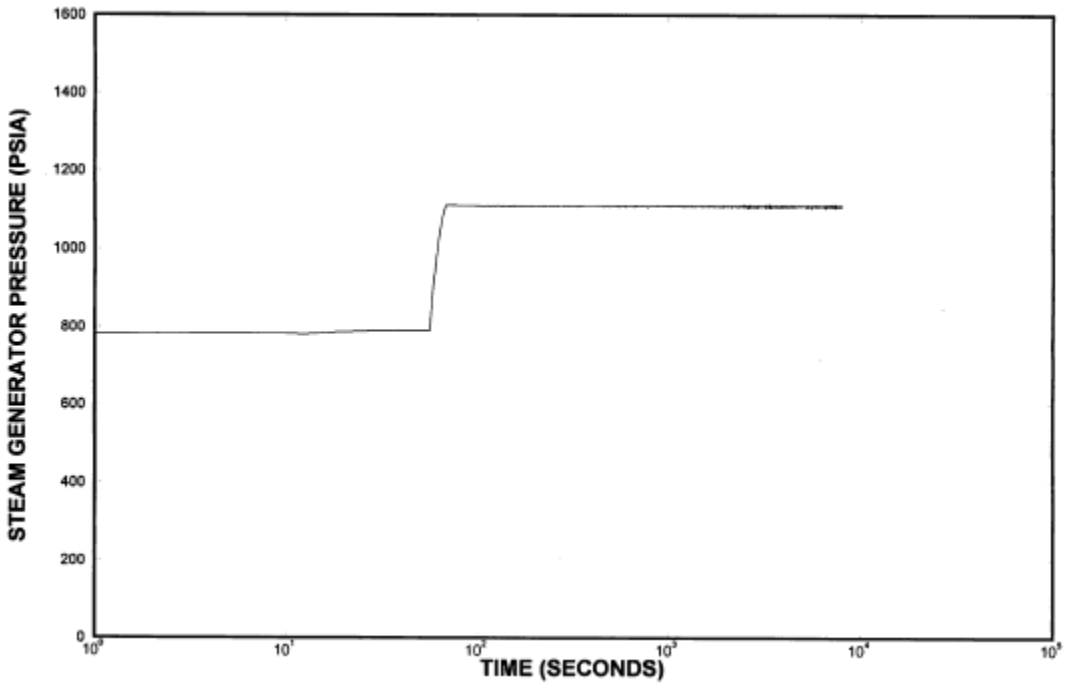

FIGURE 15.2.9-4a LOSS OF OFFSITE POWER TO THE STATION AUXILIARIES – STEAM GENERATOR PRESSURE

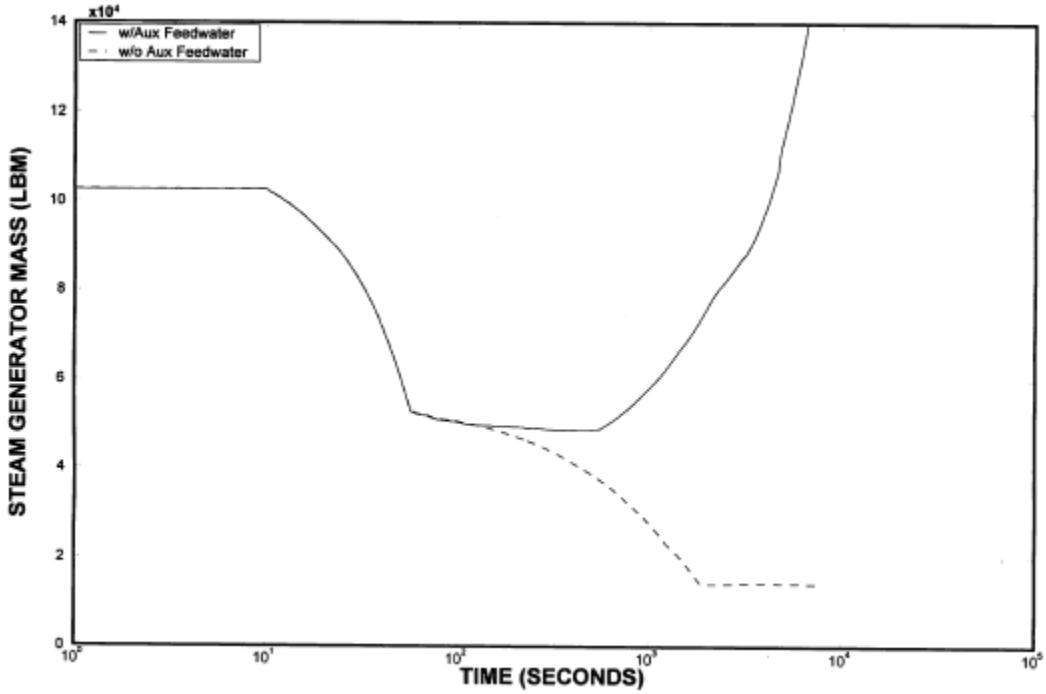

FIGURE 15.2.9-4b LOSS OF OFFSITE POWER TO THE STATION AUXILIARIES – STEAM GENERATOR MASS

Figure 15.2.10-1 - SINGLE LOOP FEEDWATER MALFUNCTION WITH MANUAL ROD CONTROL AT FULL POWER - DIGITAL FWC

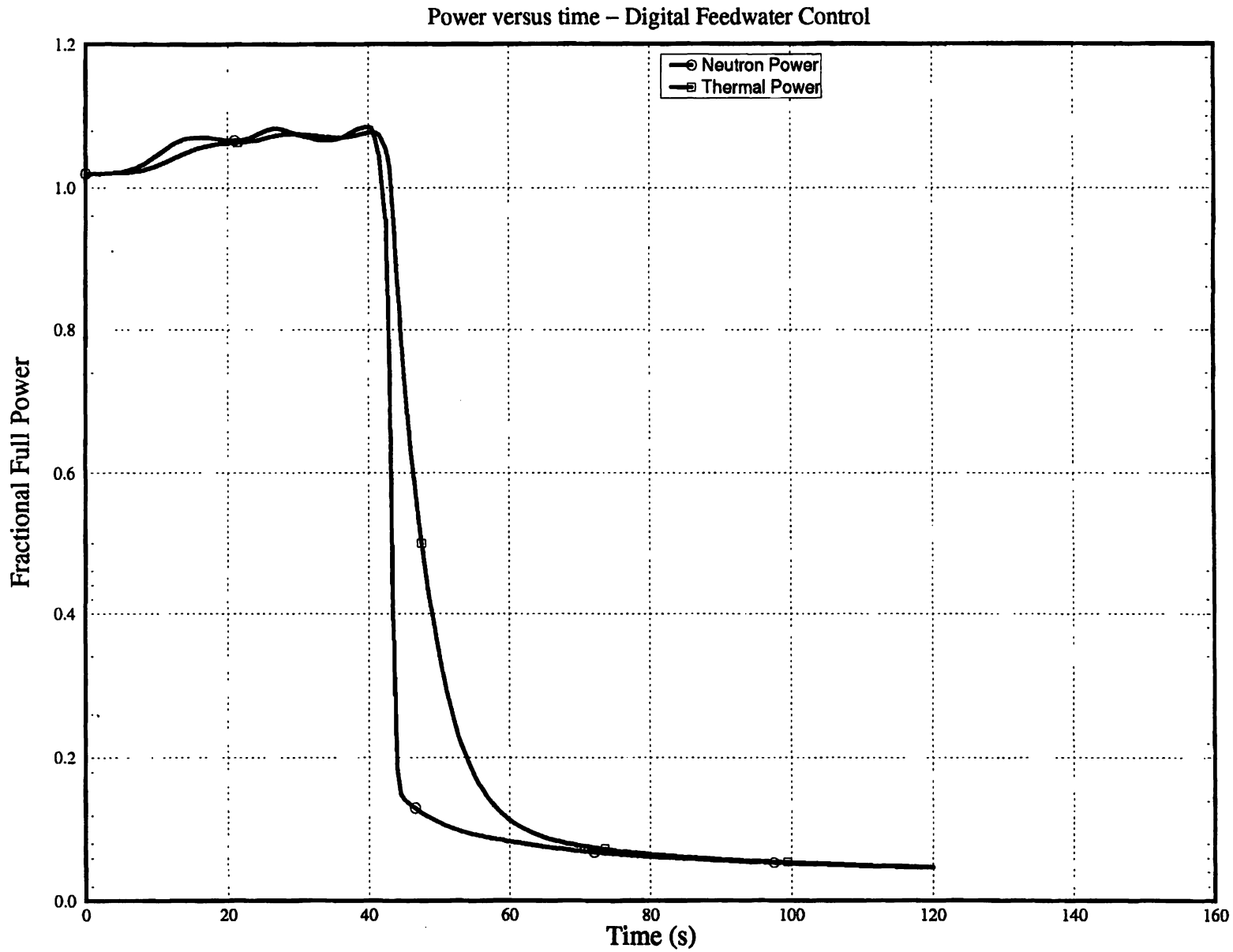

Revised by Amendment 24

Figure 15.2.10- - SINGLE LOOP FEEDWATER MALFUNCTION WITH MANUAL ROD CONTROL AT FULL POWER - DIGITAL FWC

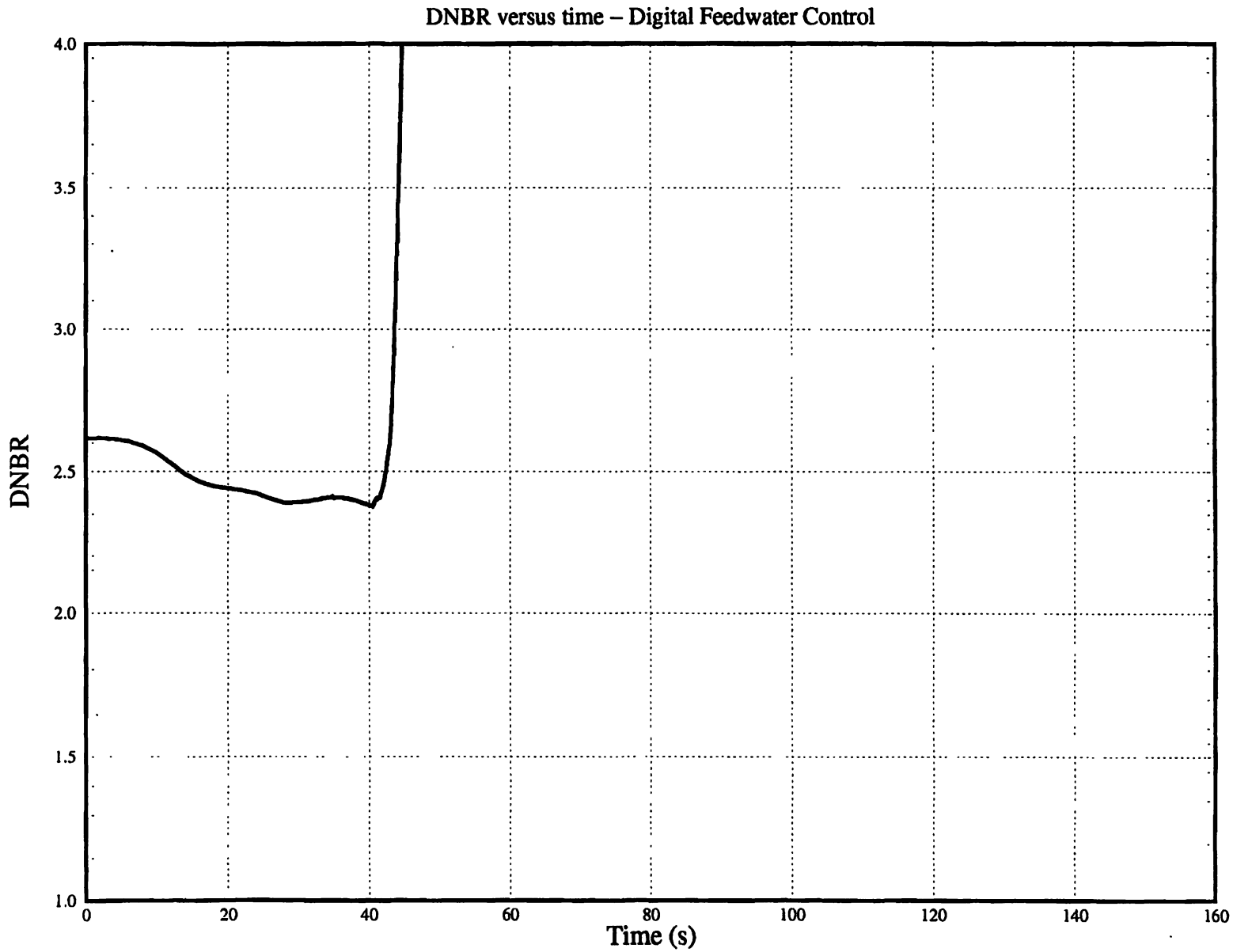

Revised by Amendment - 24

Mark BW Fuel

SQN-26
Figure 15.2.10-2b

SINGLE LOOP FEEDWATER MALFUNCTION WITH MANUAL ROD CONTROL AT FULL POWER – DIGITAL FWC – HTP Fuel (Transition Cores)

DNBR versus time – Digital Feedwater Control

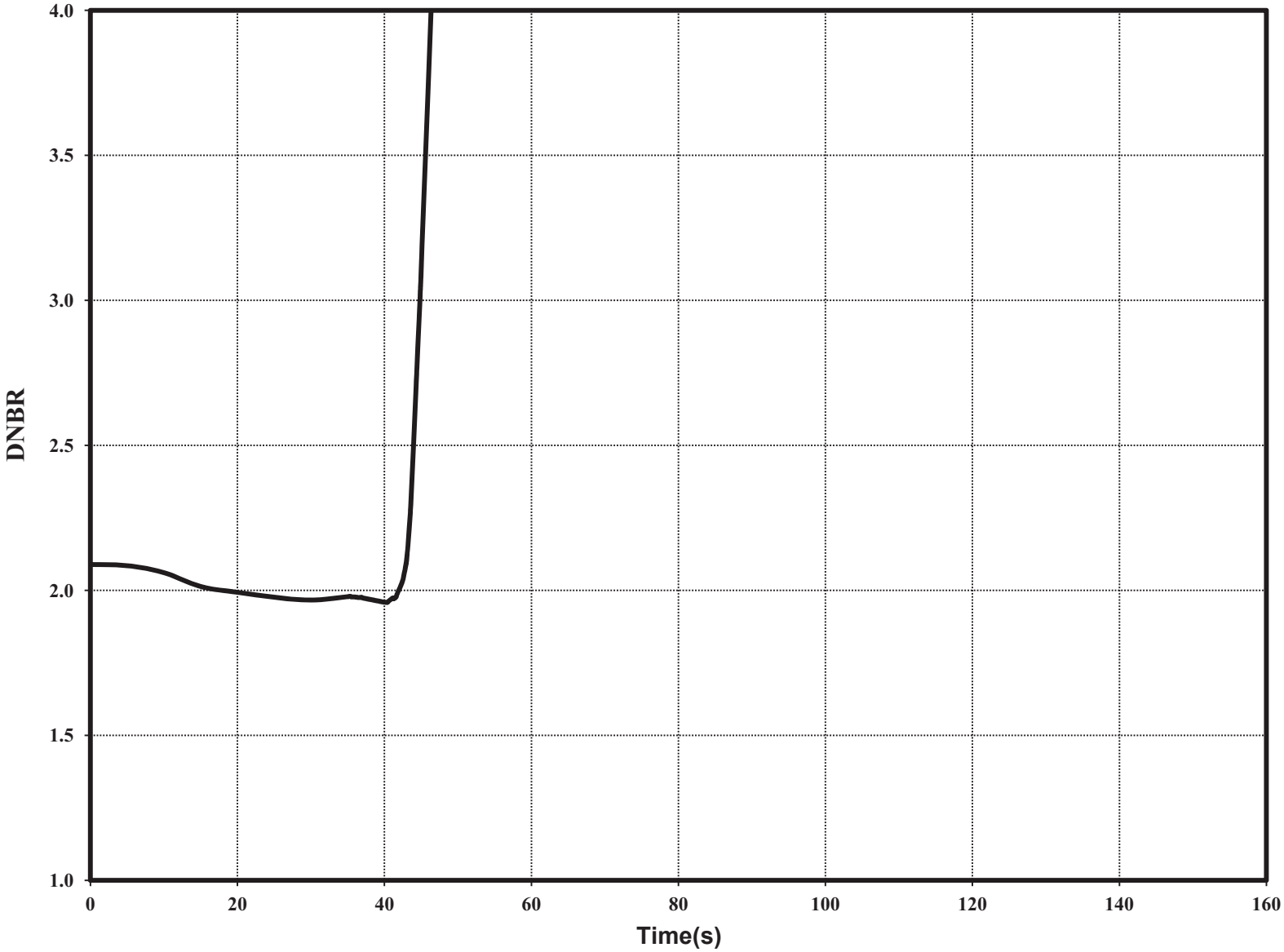

SQN-26

Figure 15.2.10-2c

SINGLE LOOP FEEDWATER MALFUNCTION WITH MANUAL ROD CONTROL AT FULL POWER – DIGITAL FWC – HTP Fuel (Full Core)

DNBR versus time – Digital Feedwater Control

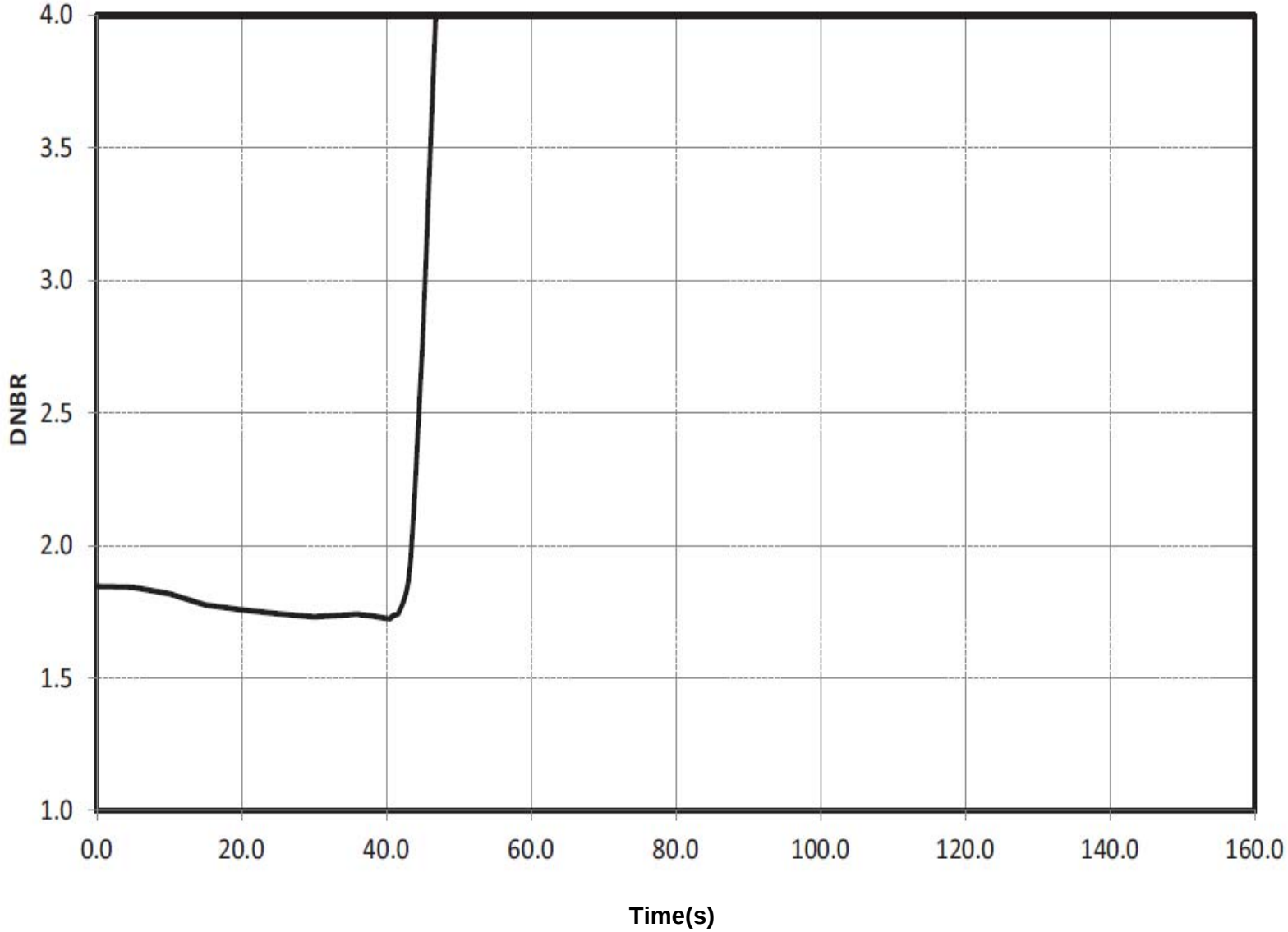

Figure 15.2.10- 3 - SINGLE LOOP FEEDWATER MALFUNCTION WITH MANUAL ROD CONTROL AT FULL POWER - DIGITAL FWC

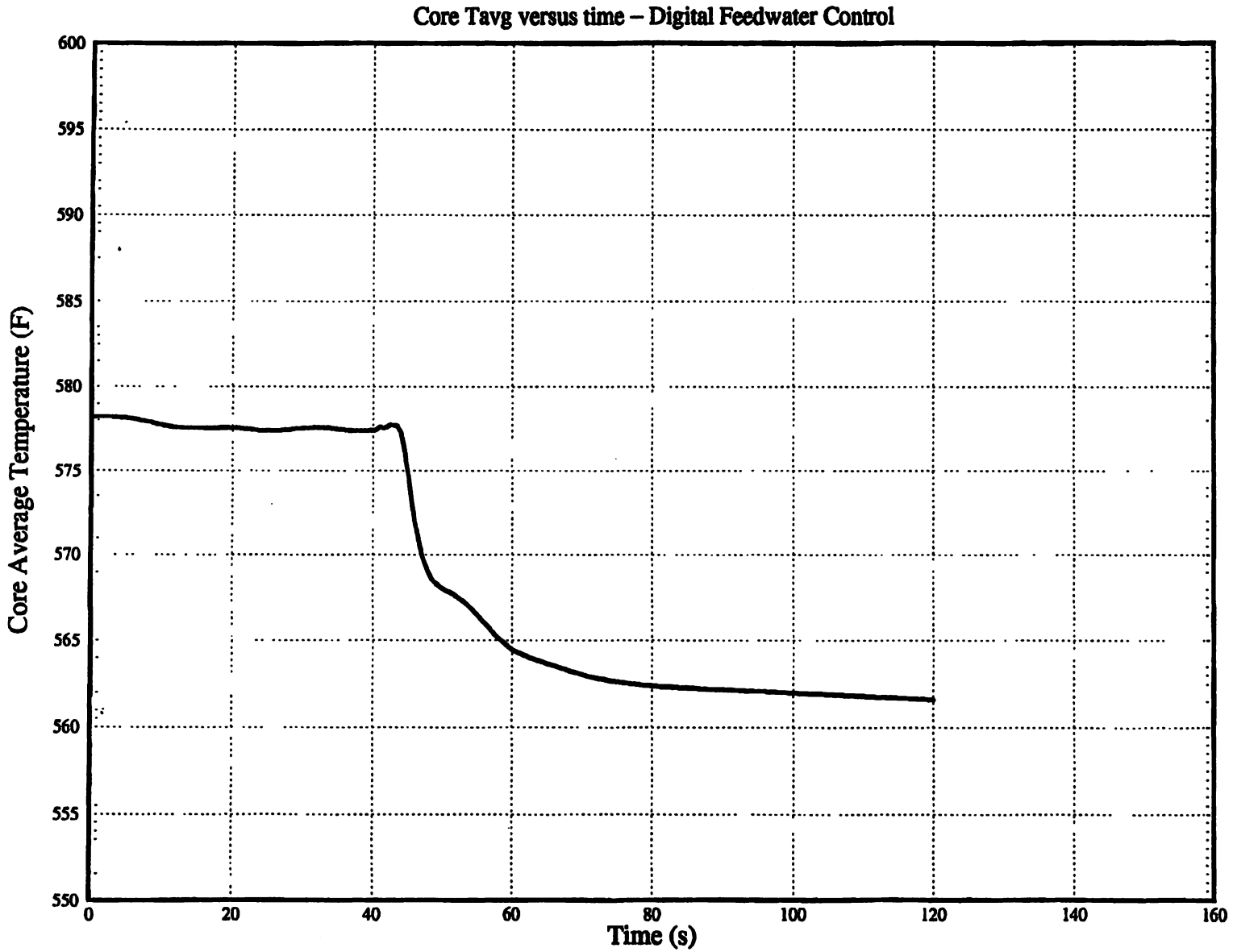

Revised by Amendment 24

Figure 15.2.10-4 - SINGLE LOOP FEEDWATER MALFUNCTION WITH MANUAL ROD CONTROL AT FULL POWER - DIGITAL FWC

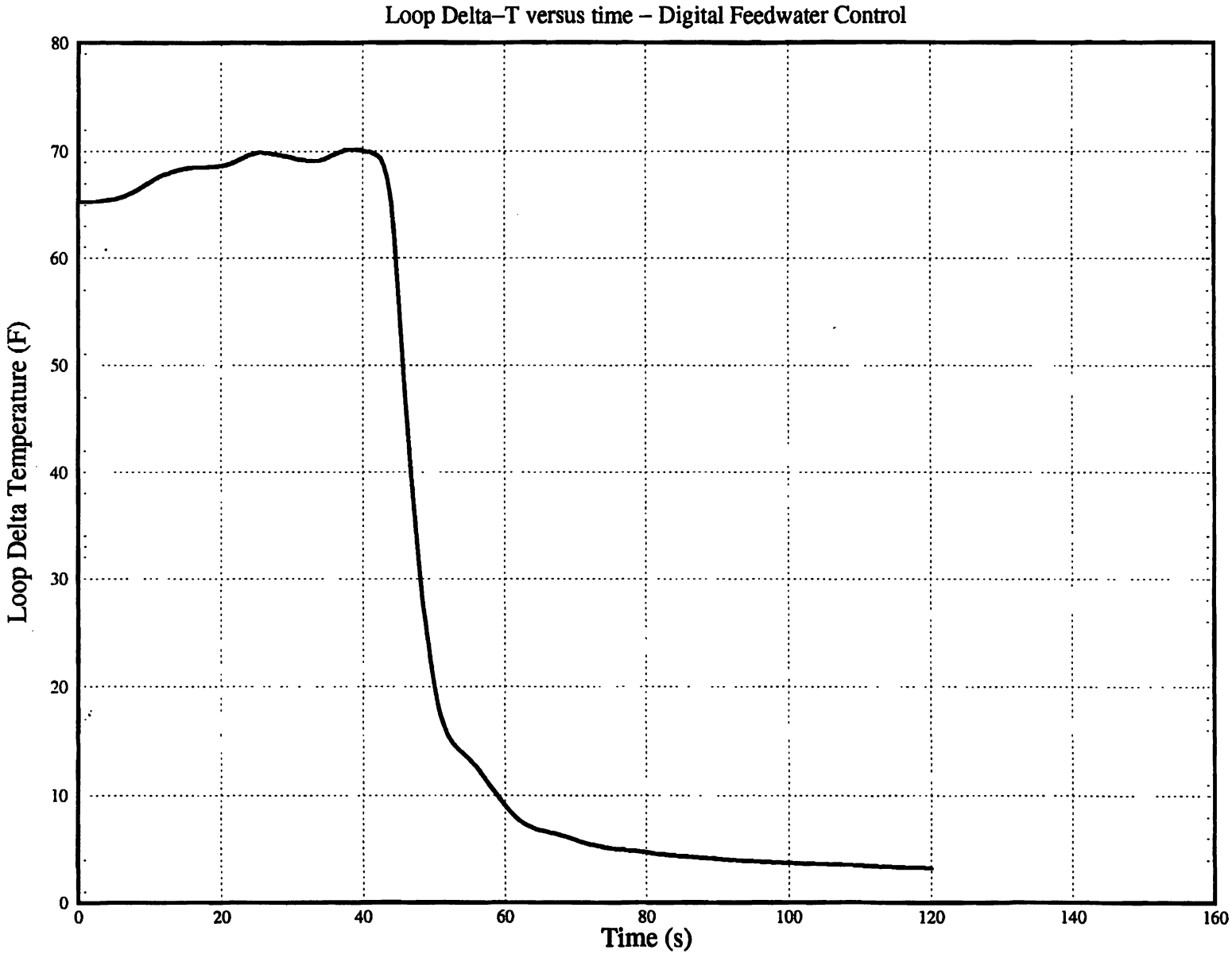

Revised by Amendment

Figure 15.2.10- 5 - SINGLE LOOP FEEDWATER MALFUNCTION WITH MANUAL ROD CONTROL AT FULL POWER - DIGITAL FWC

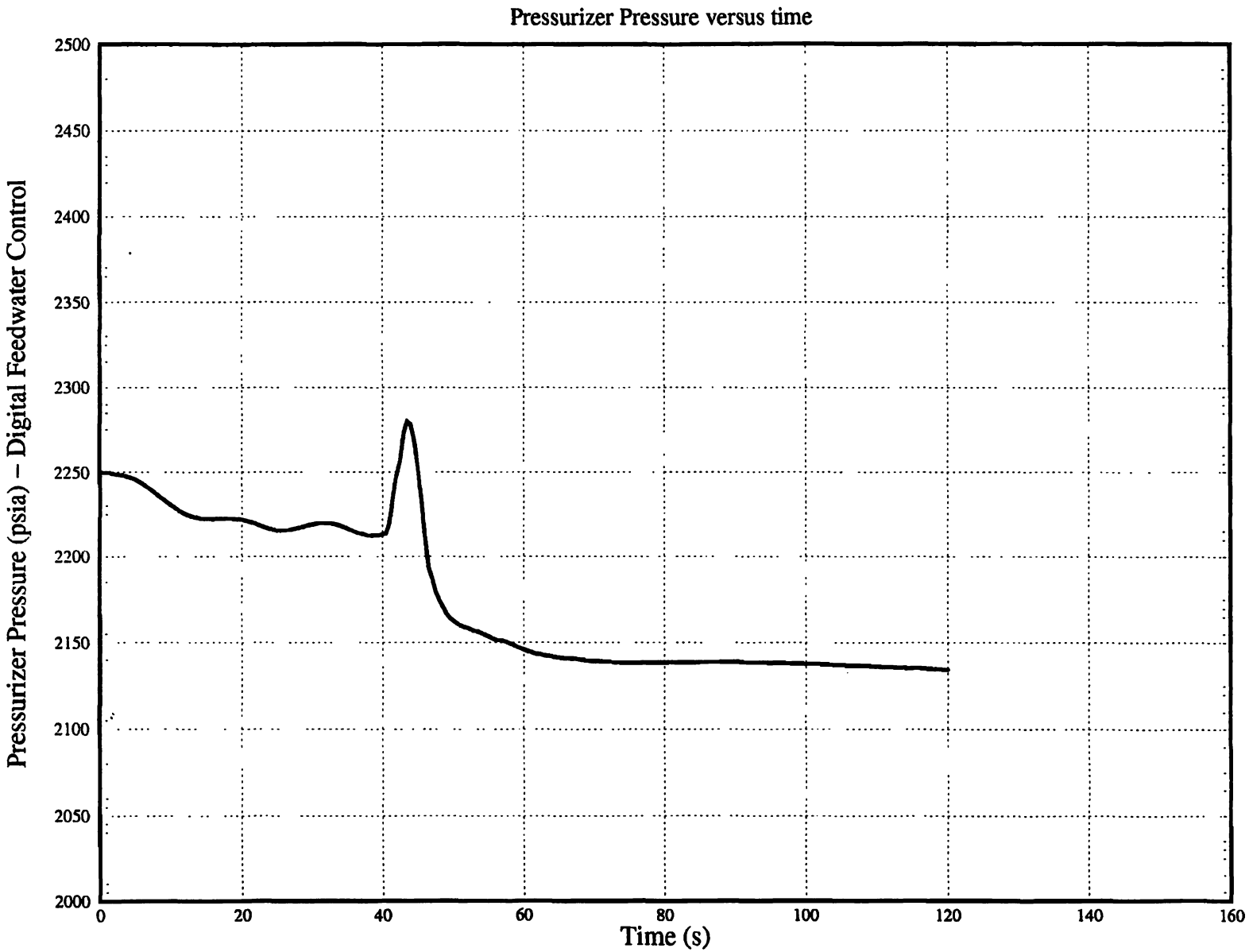

Revised by Amendment

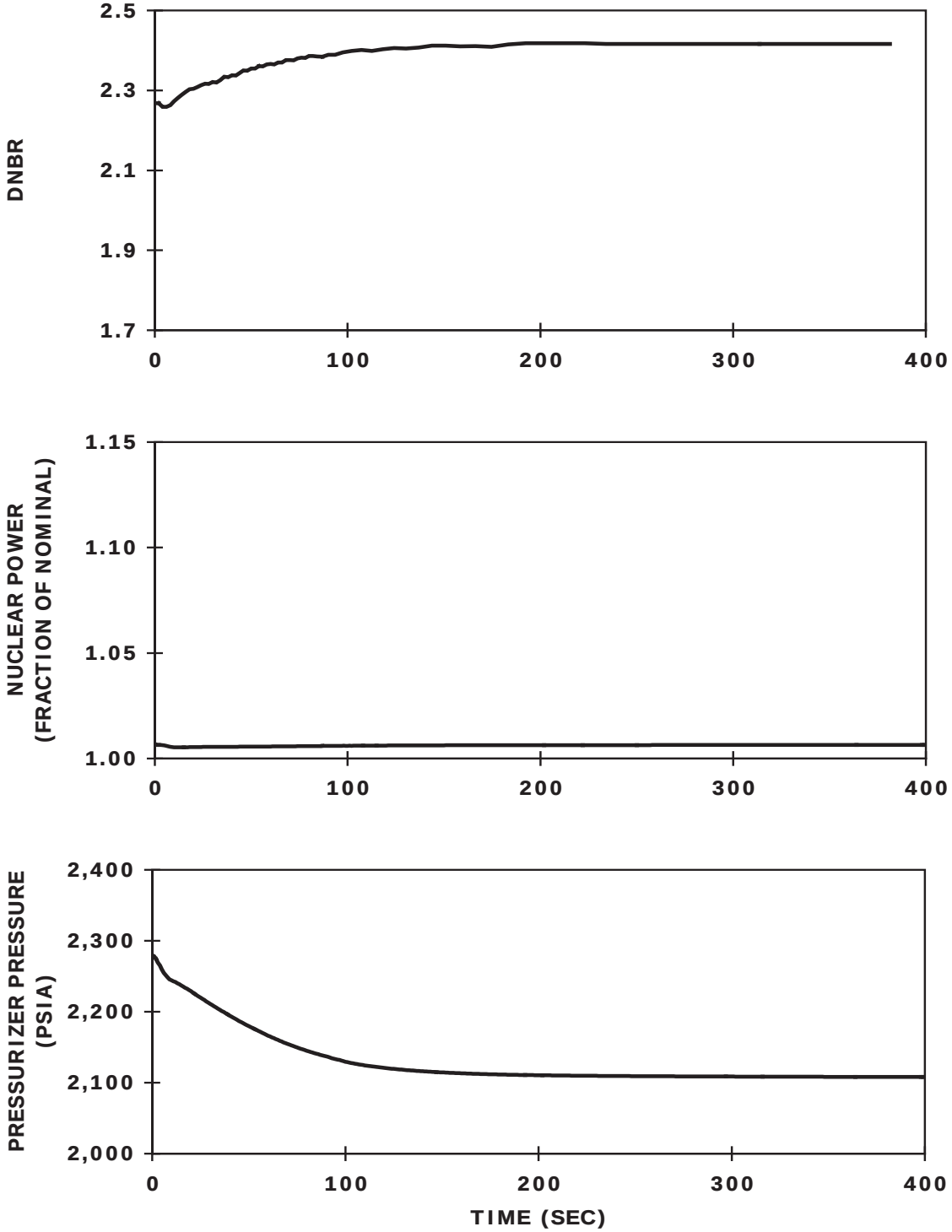

Figure 15.2.11-1a Excessive Load Increase with Manual Reactor Control, at Beginning-of-Life. DNBR, Nuclear Power and Pressurizer Pressure as a Function of Time – Mark-BW Fuel

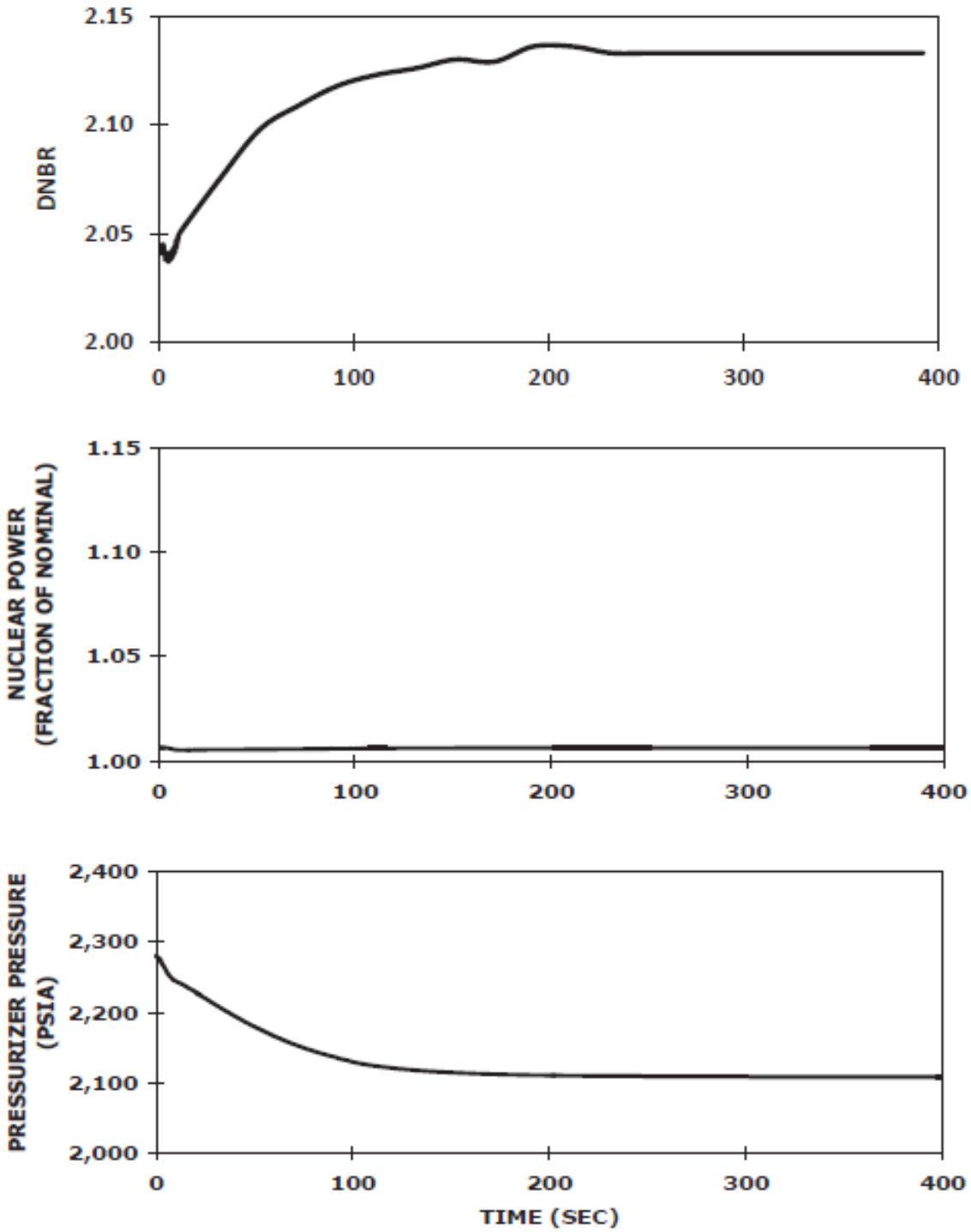

Figure 15.2.11-1b Excessive Load Increase with Manual Reactor Control, at Beginning-of-Life. DNBR, Nuclear Power and Pressurizer Pressure as a Function of Time – Advanced W17 HTP Fuel (Transition Cores)

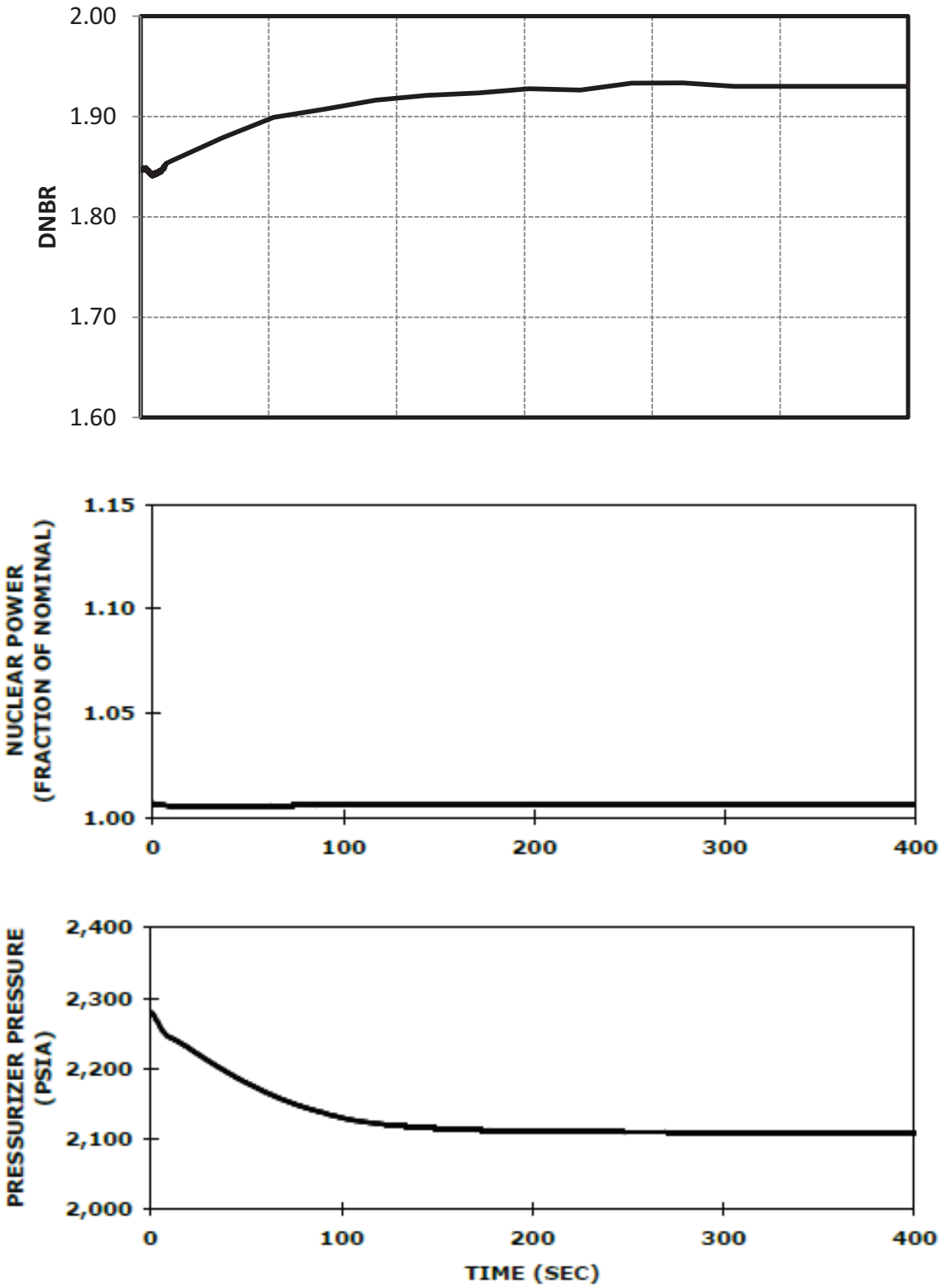

Figure 15.2.11-1c Excessive Load Increase with Manual Reactor Control, at Beginning-of-Life. DNBR, Nuclear Power and Pressurizer Pressure as a Function of Time – Advanced W17 HTP Fuel (Full Core)

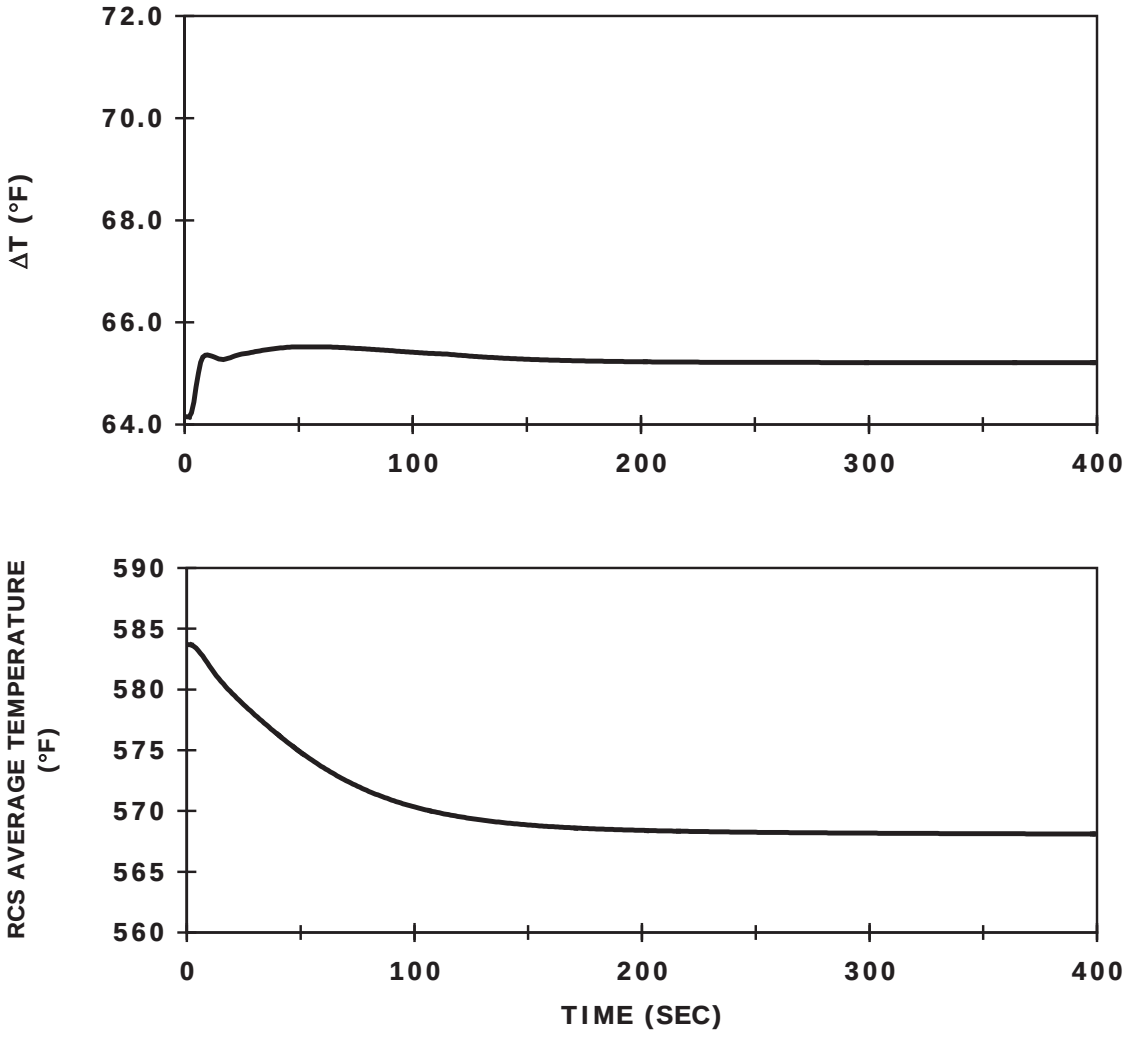

Figure 15.2.11-2 Excessive Load Increase with Manual Reactor Control, at Beginning-of-Life. ΔT and Tavg as a Function of Time

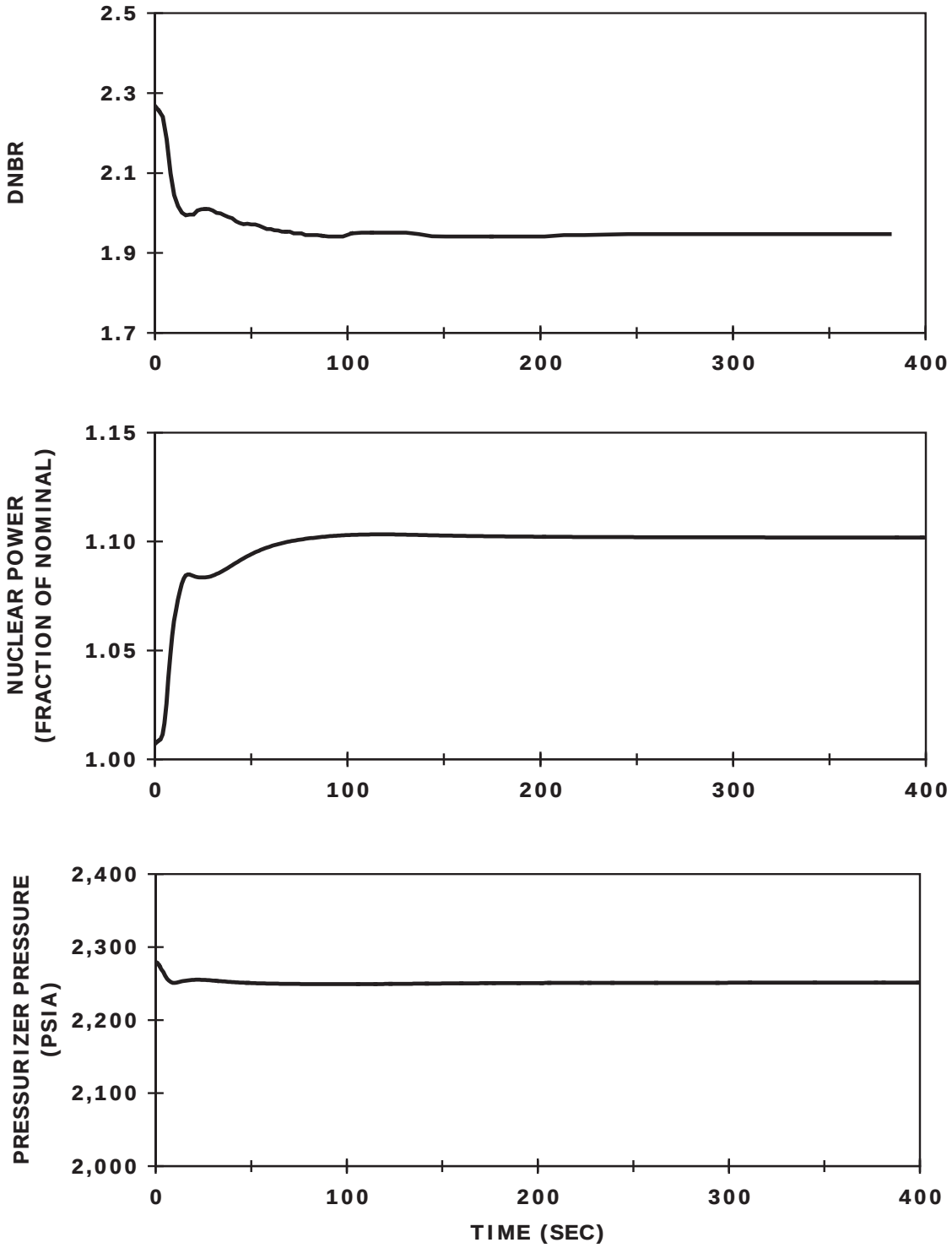

Figure 15.2.11-3a Excessive Load Increase with Manual Reactor Control, at End-of-Life. DNBR, Nuclear Power and Pressurizer Pressure as a Function of Time – Mark-BW Fuel

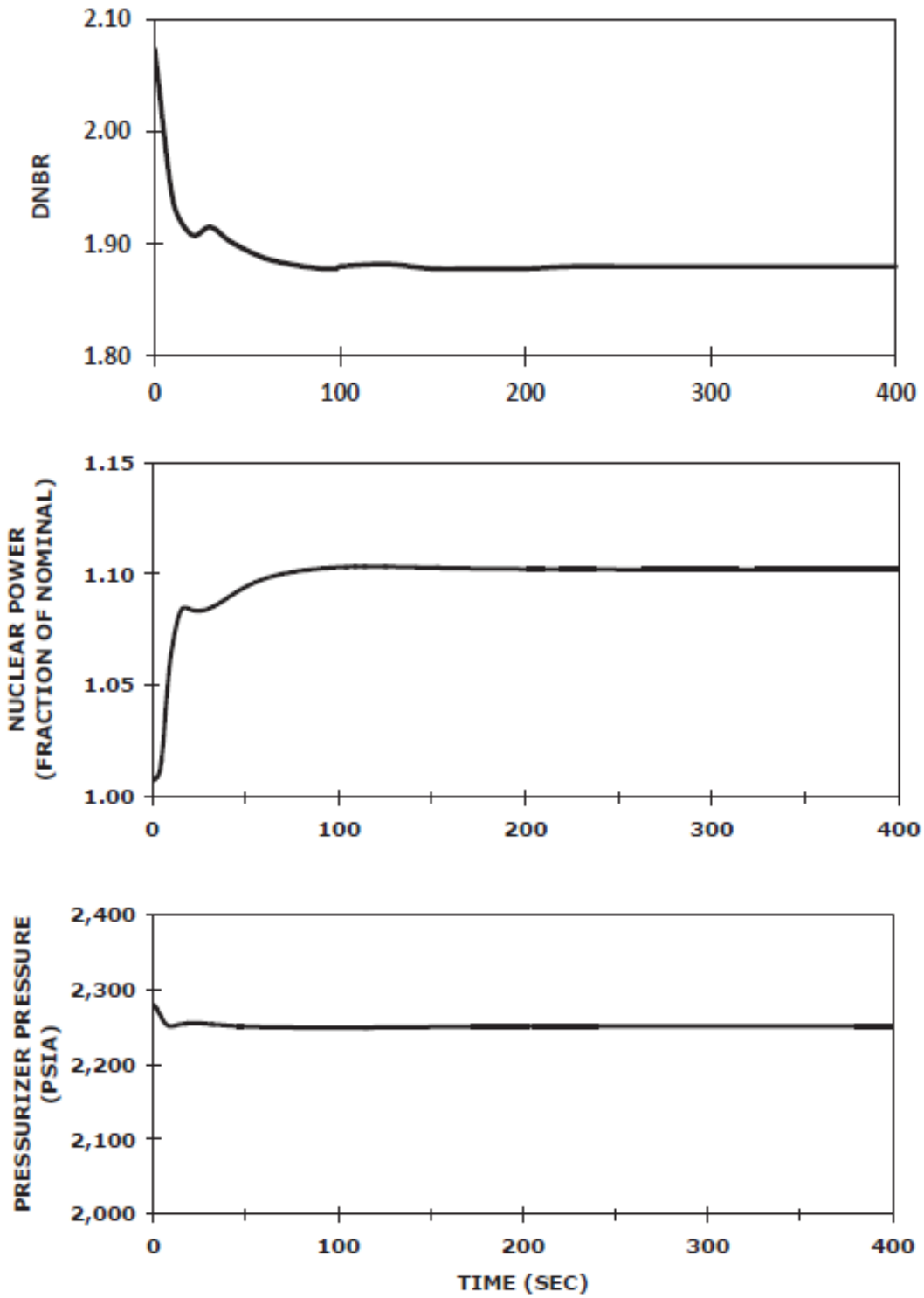

Figure 15.2.11-3b Excessive Load Increase with Manual Reactor Control, at End-of-Life. DNBR, Nuclear Power and Pressurizer Pressure as a Function of Time – Advanced W17 HTP Fuel (Transition Cores)

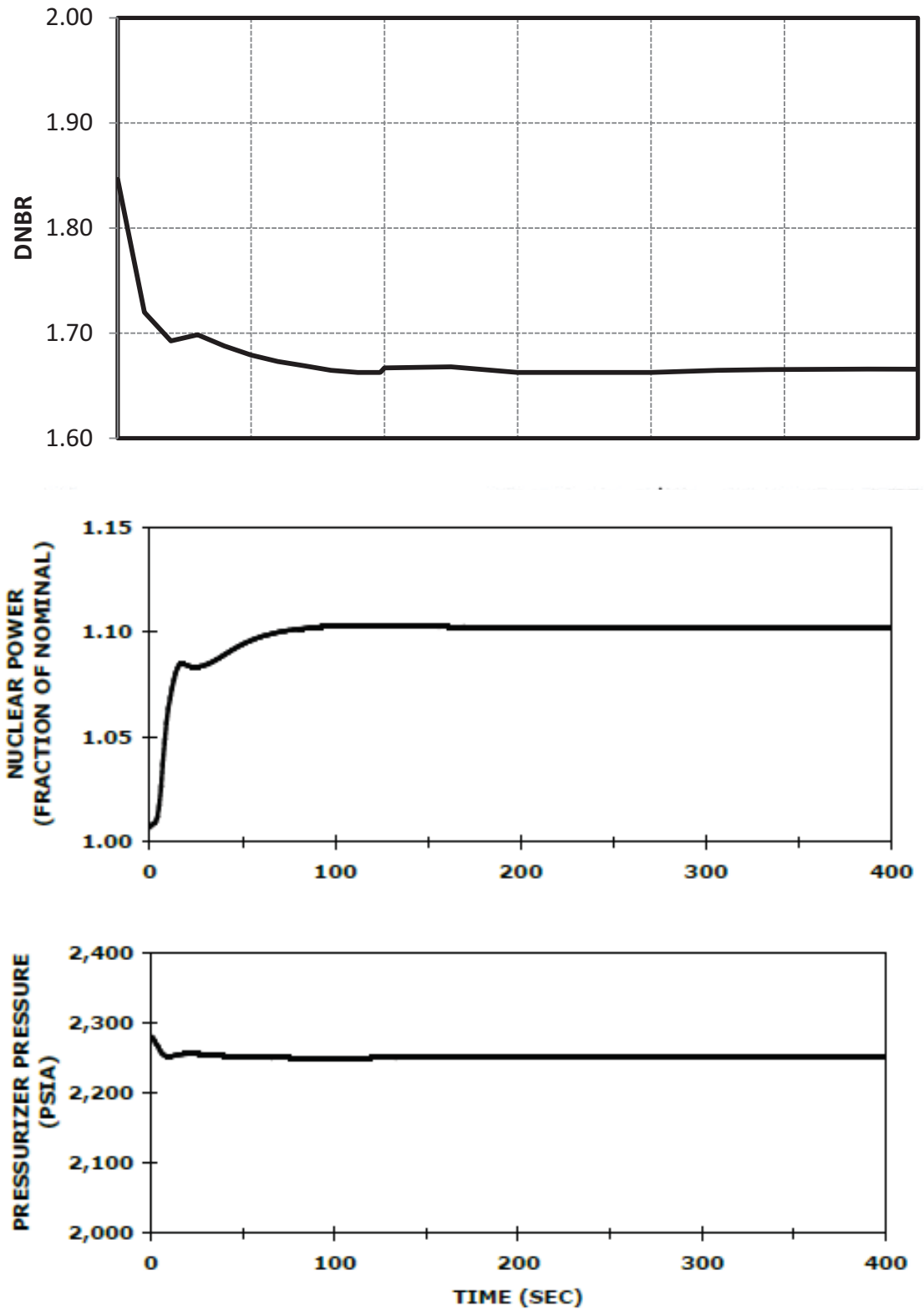

Figure 15.2.11-3c Excessive Load Increase with Manual Reactor Control, at End of Life. DNBR, Nuclear Power and Pressurizer Pressure as a Function of Time – Advanced W17 HTP Fuel (Full Core)

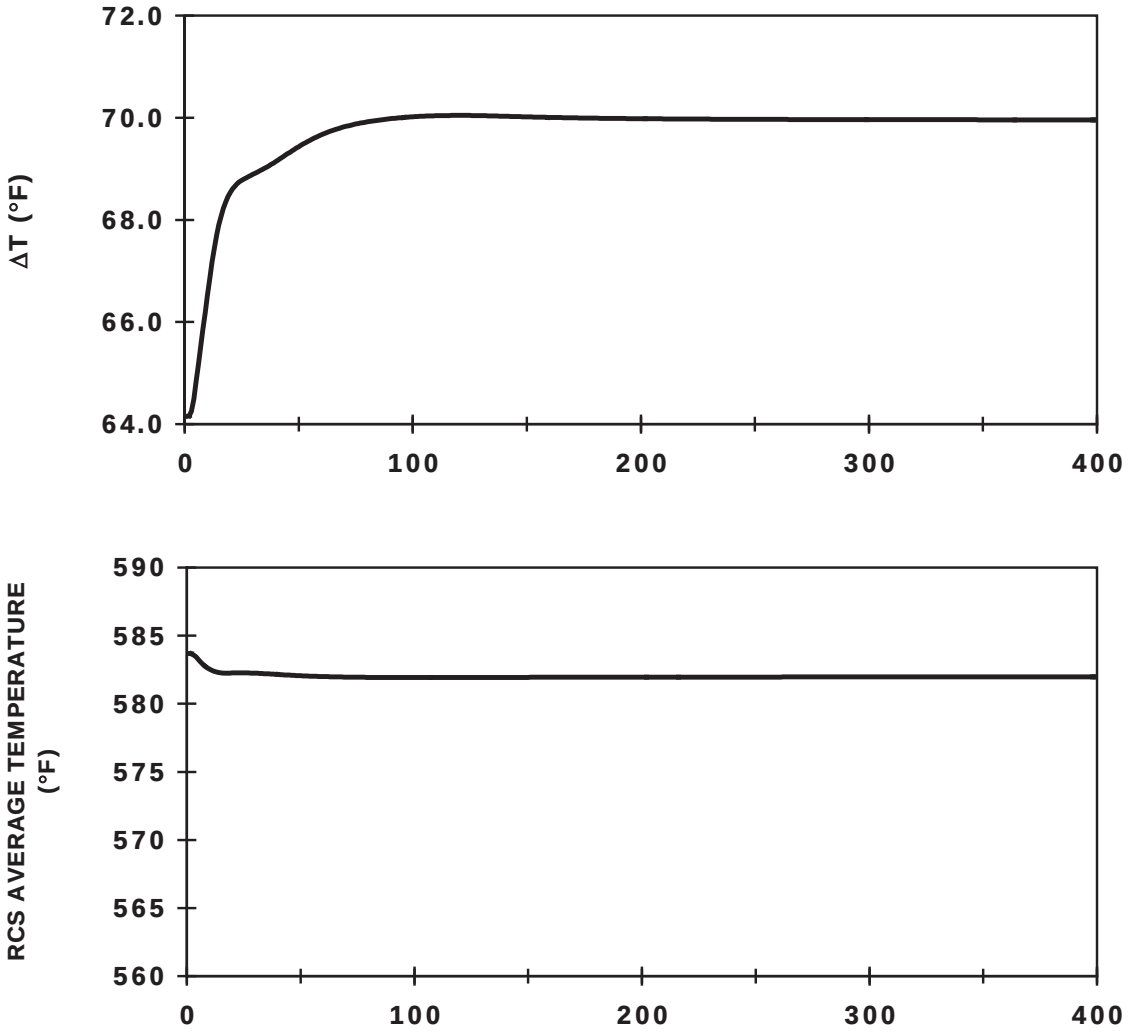

Figure 15.2.11-4 **Excessive Load Increase with Manual Reactor Control, at End-of-Life. ΔT and Tavg as a Function of Time**

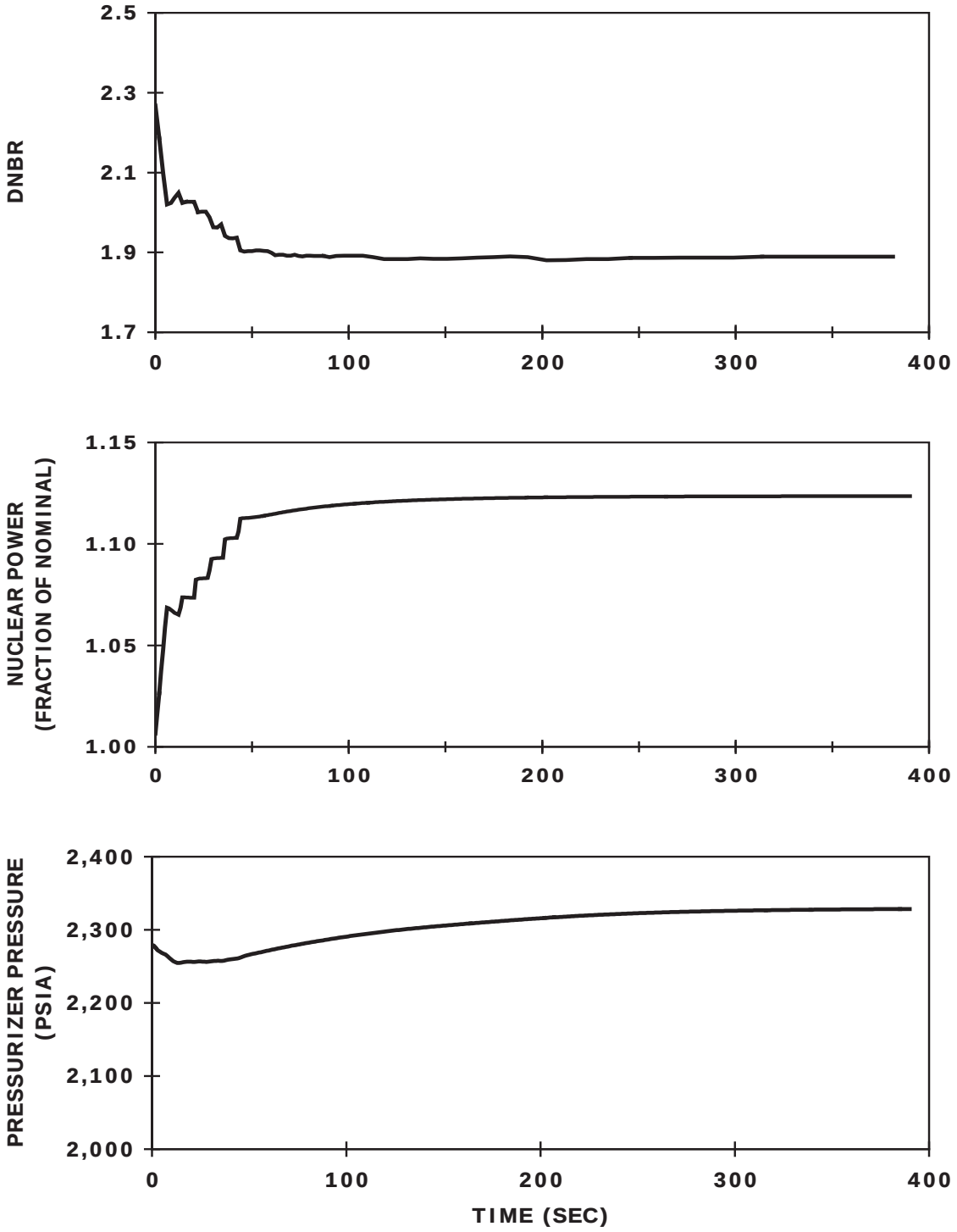

Figure 15.2.11-5a **Excessive Load Increase with Automatic Reactor Control, at Beginning-of-Life. DNBR, Nuclear Power and Pressurizer Pressure as a Function of Time – Mark-BW Fuel**

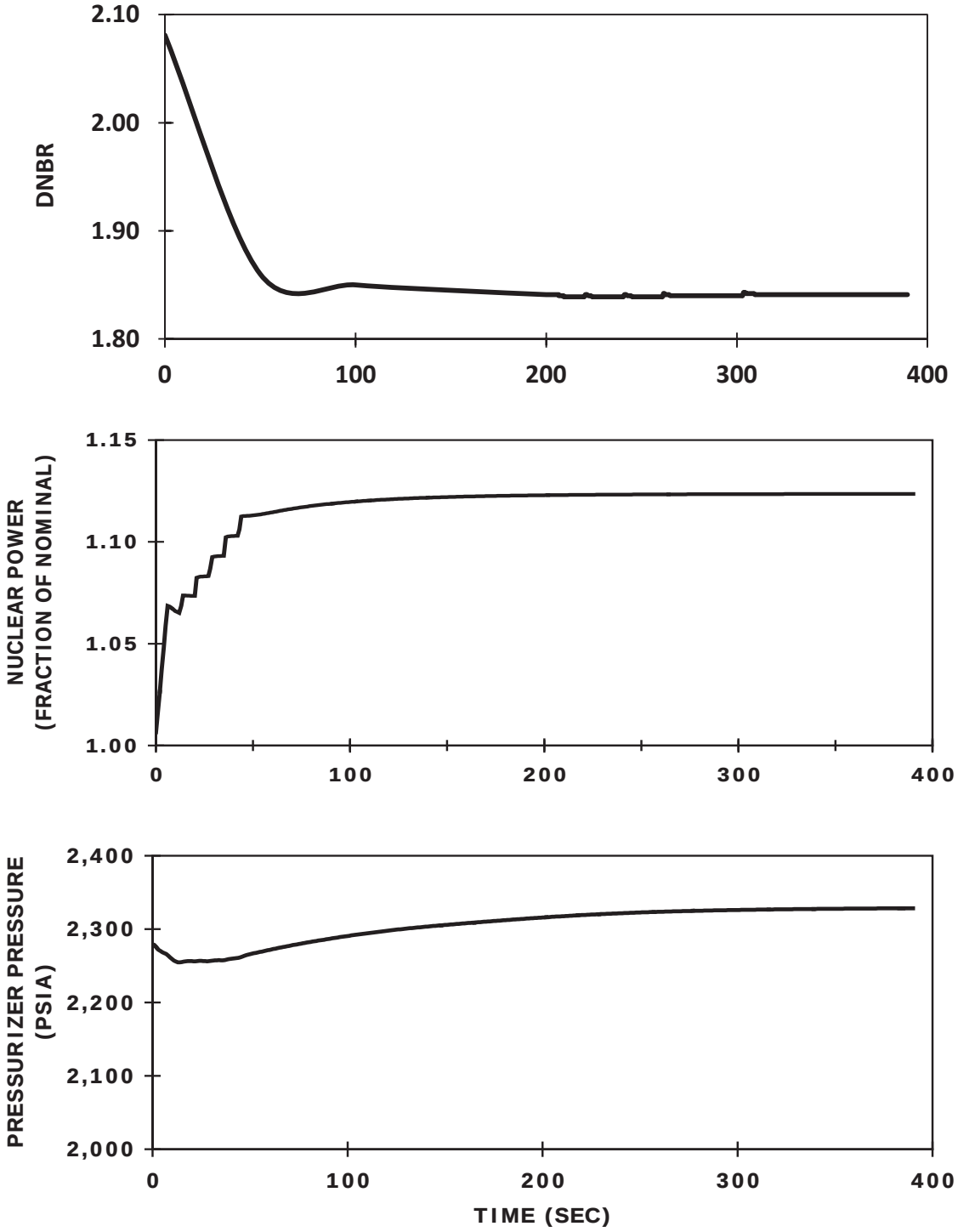

Figure 15.2.11-5b Excessive Load Increase with Automatic Reactor Control, at Beginning-of-Life. DNBR, Nuclear Power and Pressurizer Pressure as a Function of Time - Advanced W17 HTP Fuel (Transition Cores)

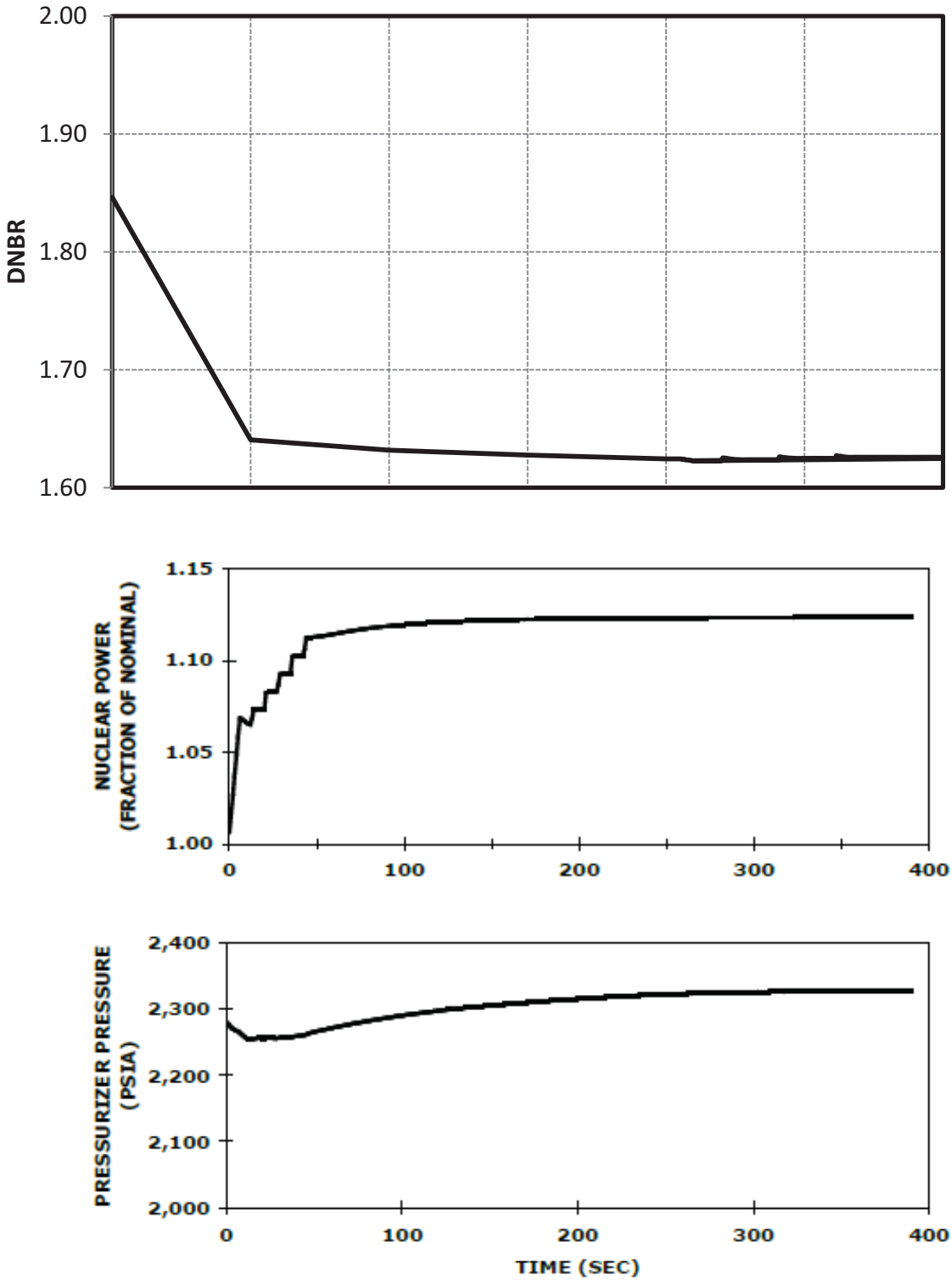

Figure 15.2.11-5c Excessive Load Increase with Automatic Reactor Control, at Beginning-of-Life. DNBR, Nuclear Power and Pressurizer Pressure as a Function of Time – Advanced W17 HTP Fuel (Full Core)

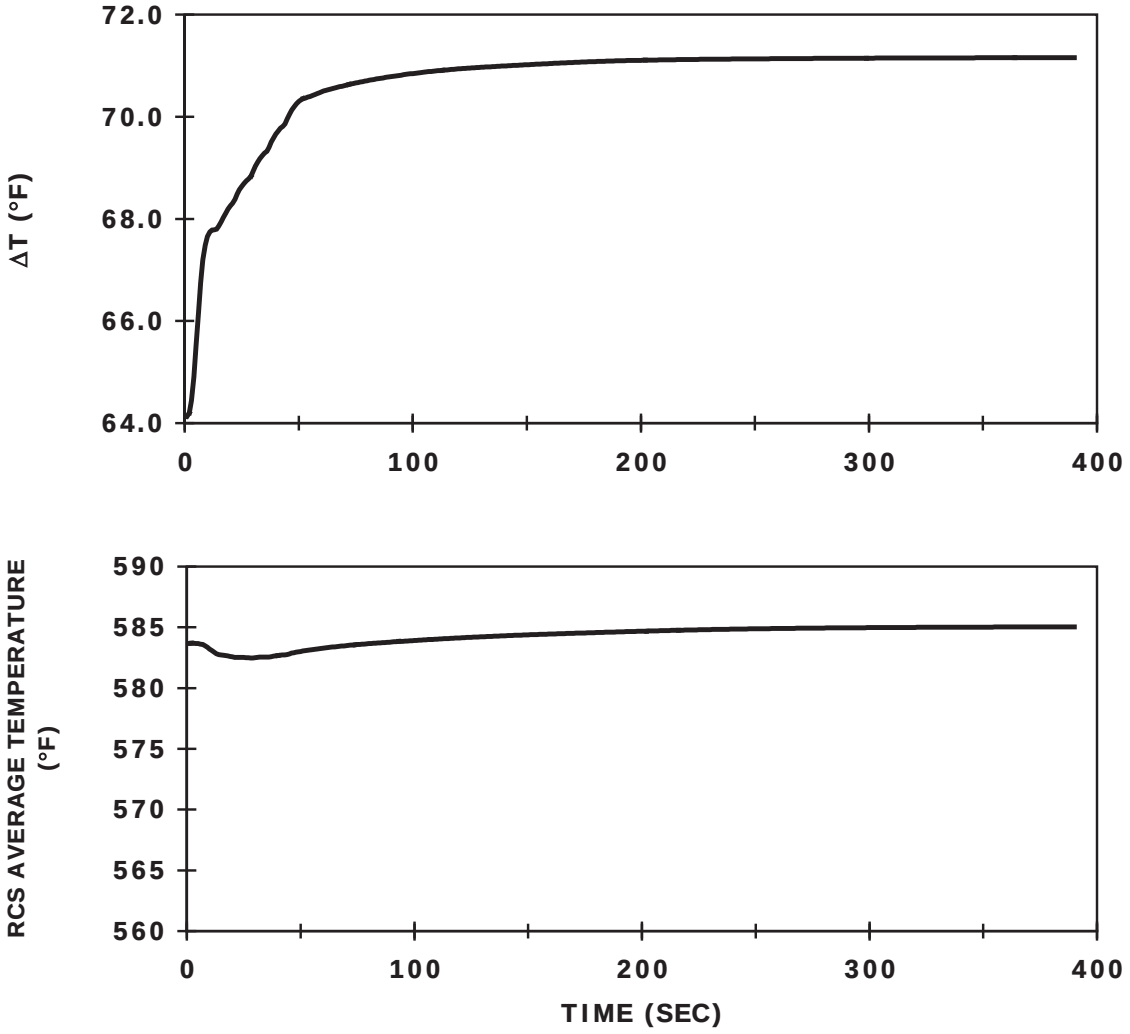

Figure 15.2.11-6 **Excessive Load Increase with Automatic Reactor Control, at Beginning-of-Life. ΔT and Tavg as a Function of Time**

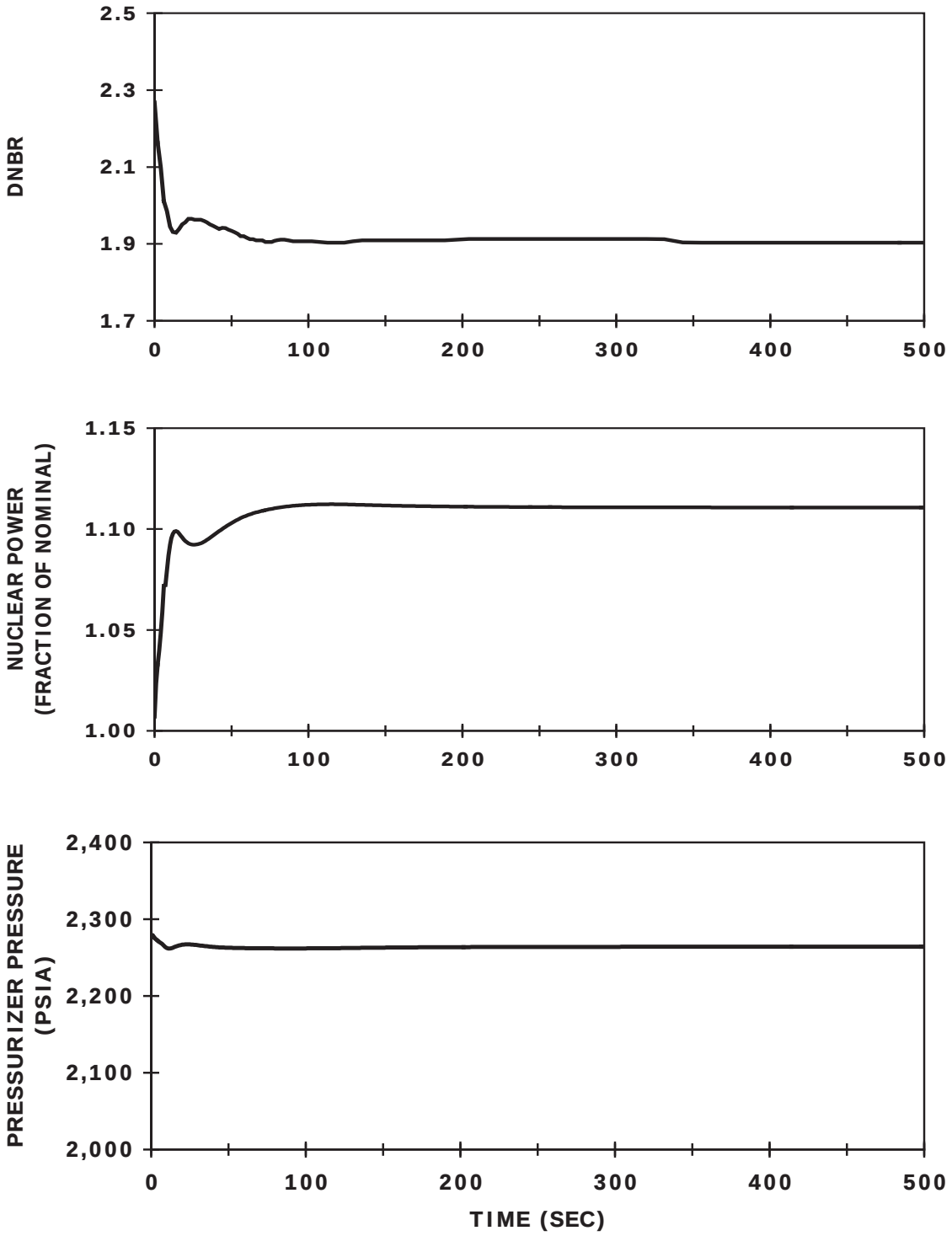

Figure 15.2.11-7a **Excessive Load Increase with Automatic Reactor Control, at End-of-Life. DNBR, Nuclear Power and Pressurizer Pressure as a Function of Time – Mark-BW Fuel**

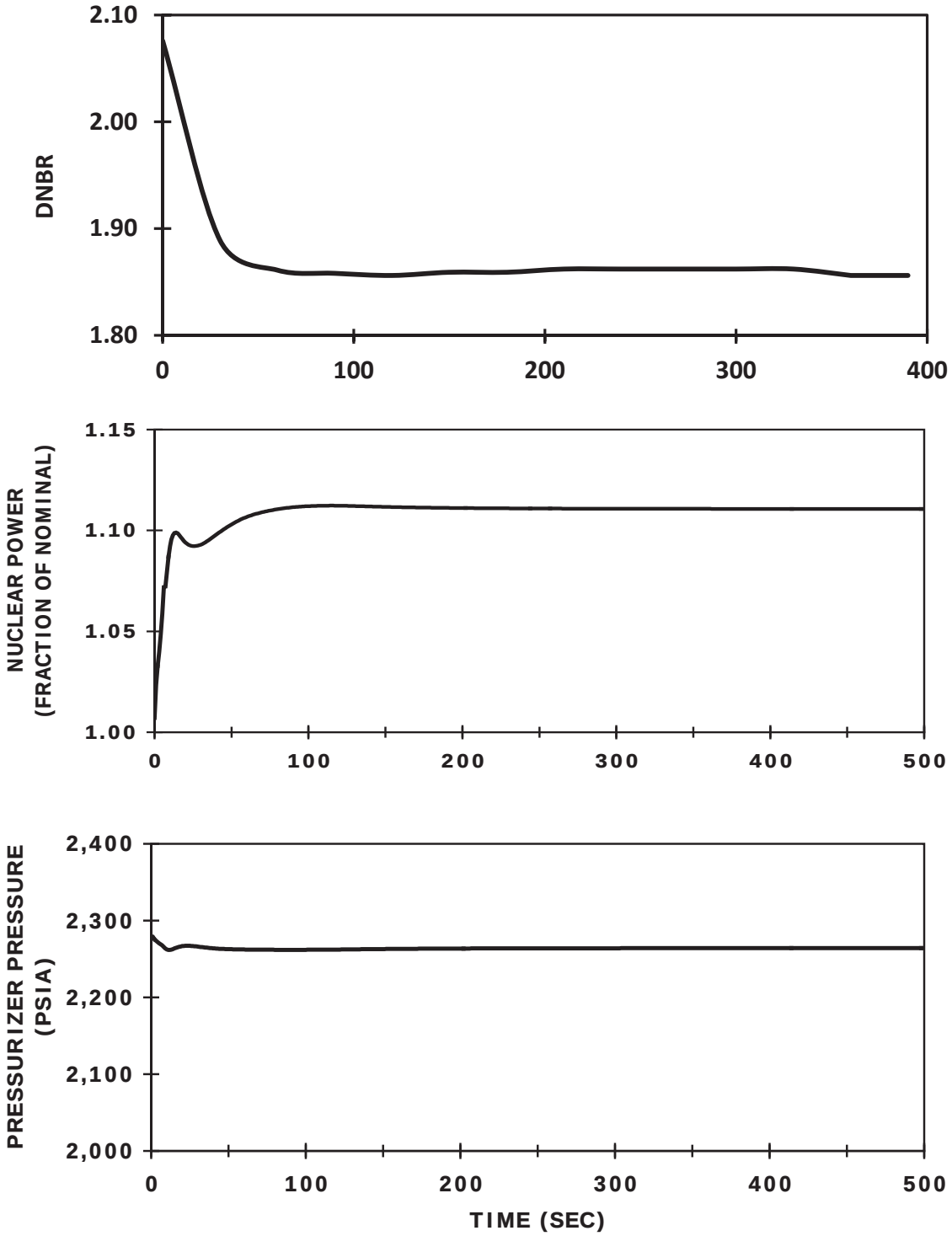

Figure 15.2.11-7b Excessive Load Increase with Automatic Reactor Control, at End-of-Life. DNBR, Nuclear Power and Pressurizer Pressure as a Function of Time – Advanced W17 HTP Fuel (Transition Cores)

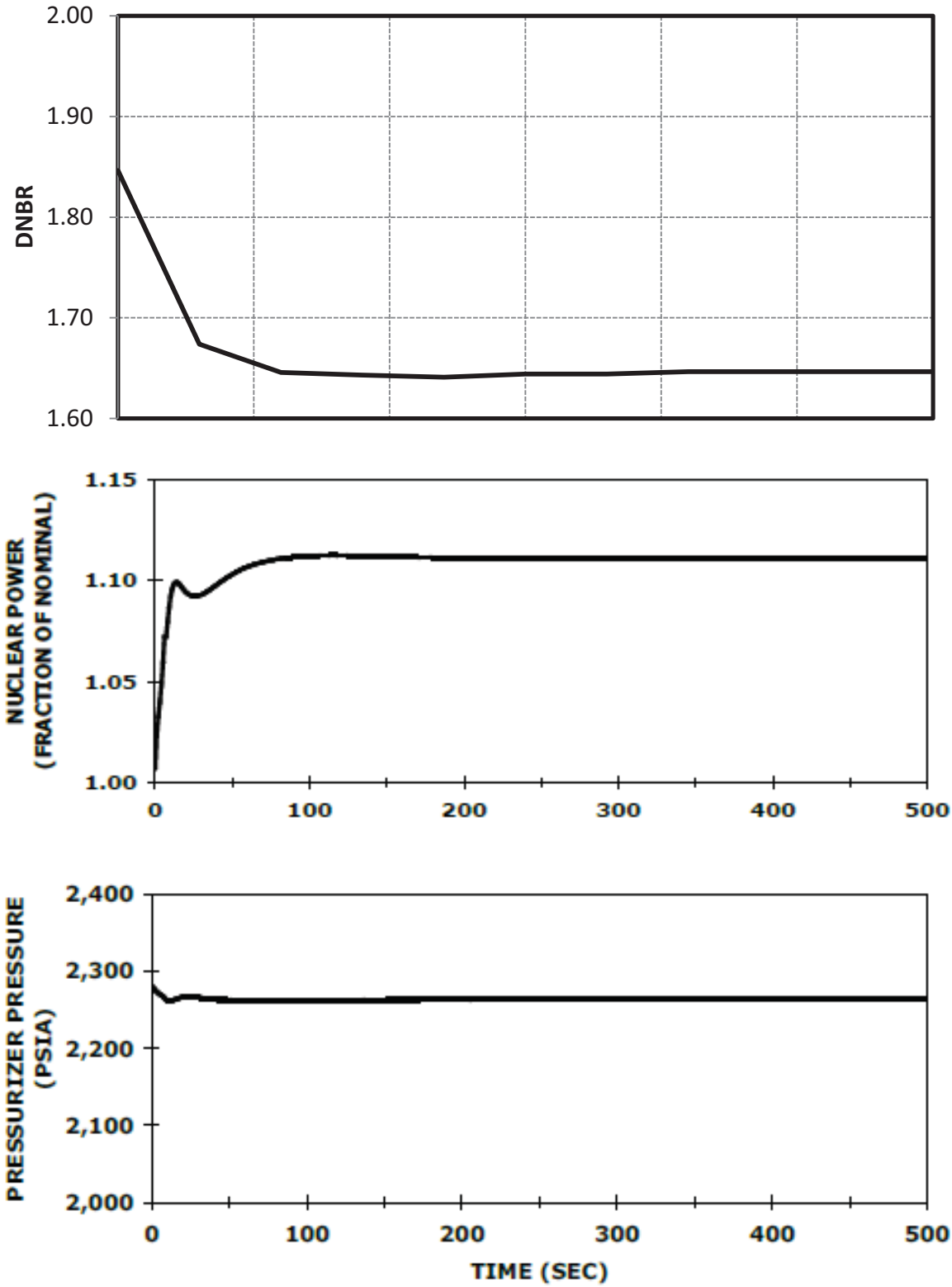

Figure 15.2.11-7c Excessive Load Increase with Automatic Reactor Control, at End-of-Life. DNBR, Nuclear Power and Pressurizer Pressure as a Function of Time – Advanced W17 HTP Fuel (Full Core)

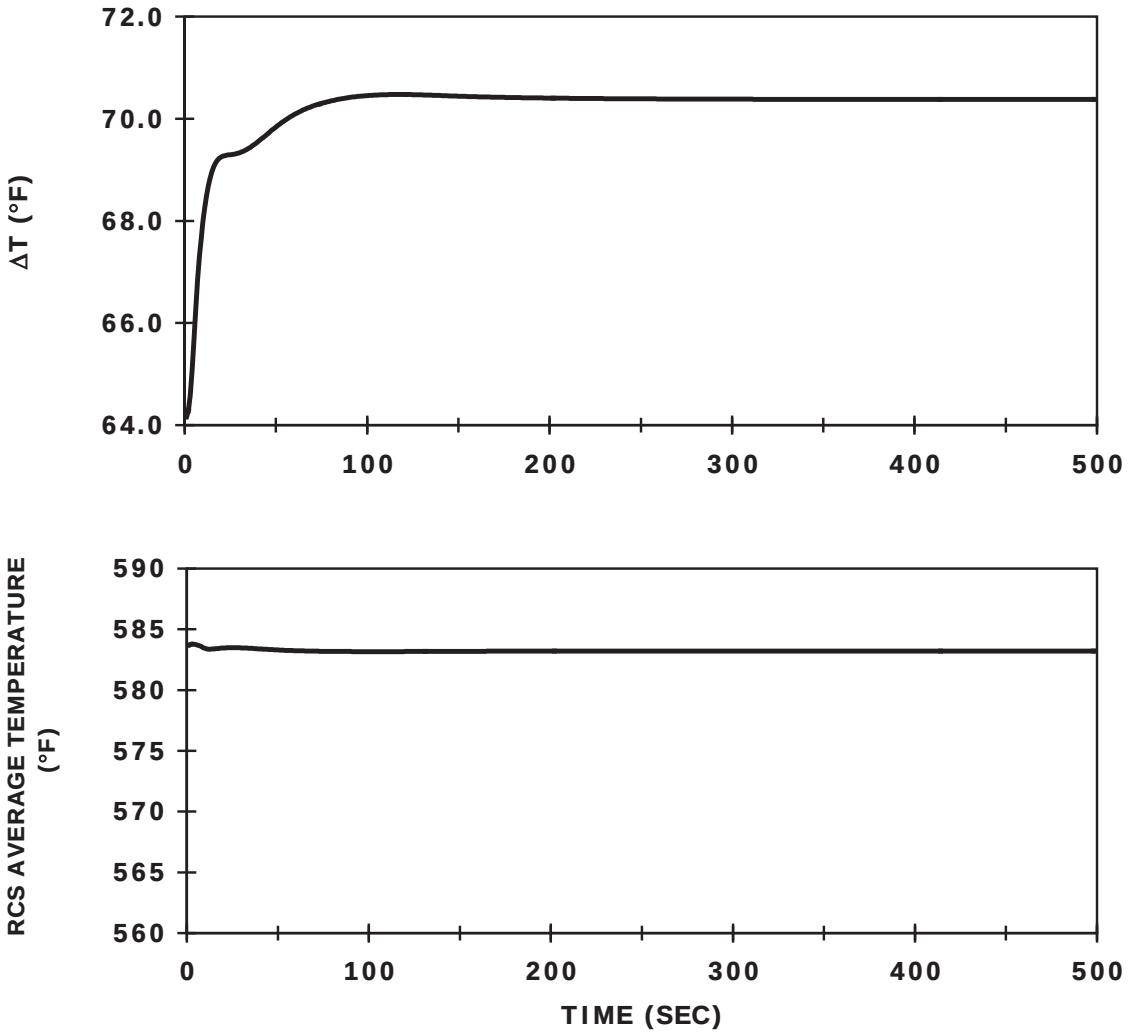

Figure 15.2.11-8 **Excessive Load Increase with Automatic Reactor Control, at End-of-Life. ΔT and Tavg as a Function of Time**

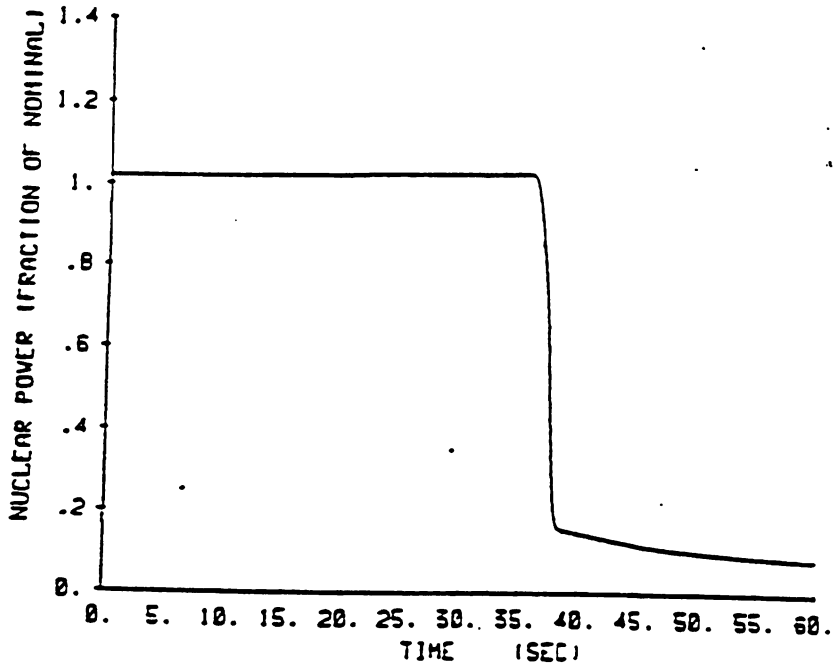

FIGURE 15.2.12-1

Nuclear Flux Transient for Accidental Depressurization

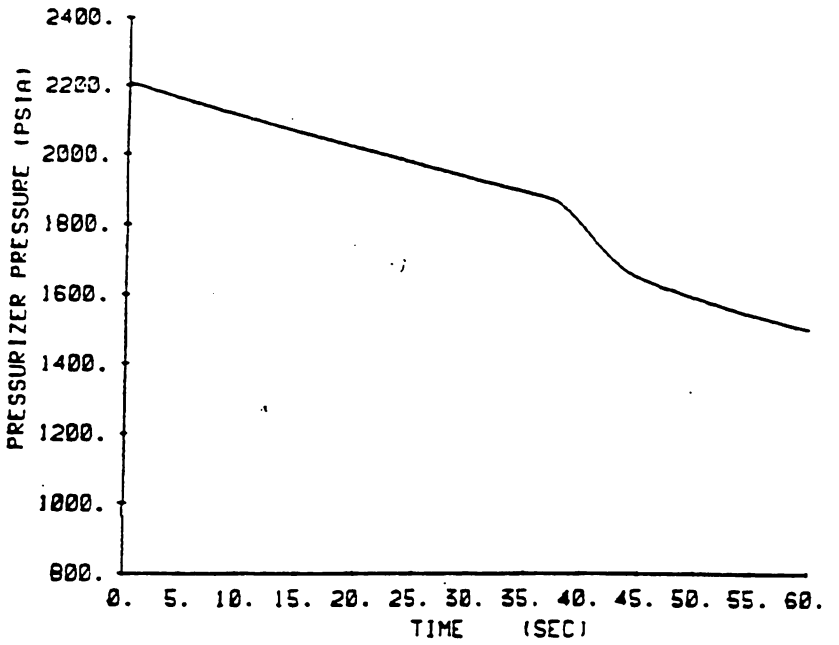

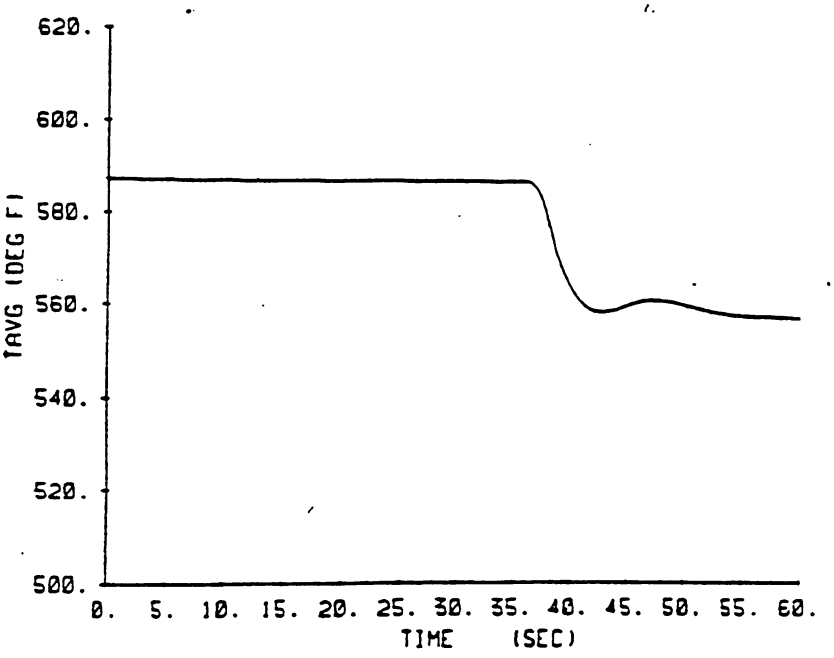

FIGURE 15.2.12-2

Pressurizer Pressure and Coolant Temp
Transients for Accidental Depressurization

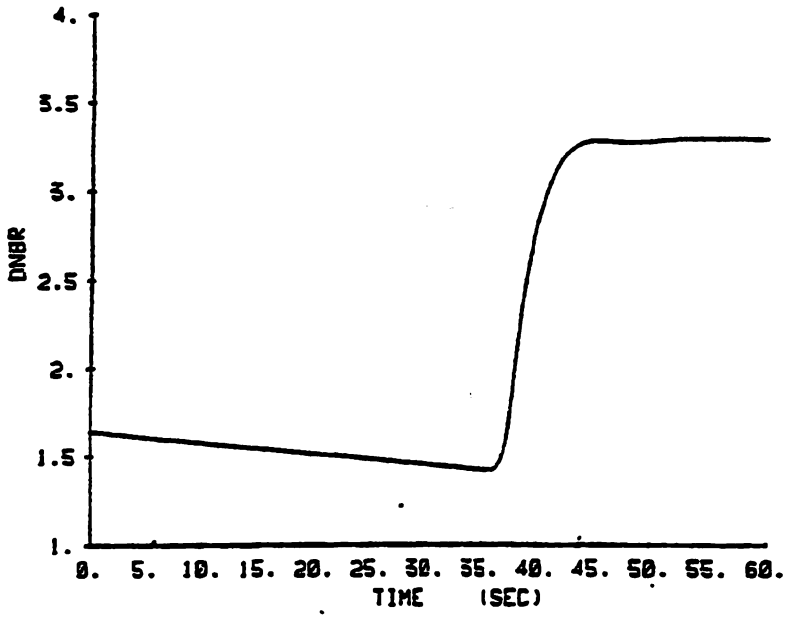

FIGURE 15.2.12-3 a

DNBR Transient for Accidental Depressurization- Mark-BW Fuel

Figure 15.2.12-3b

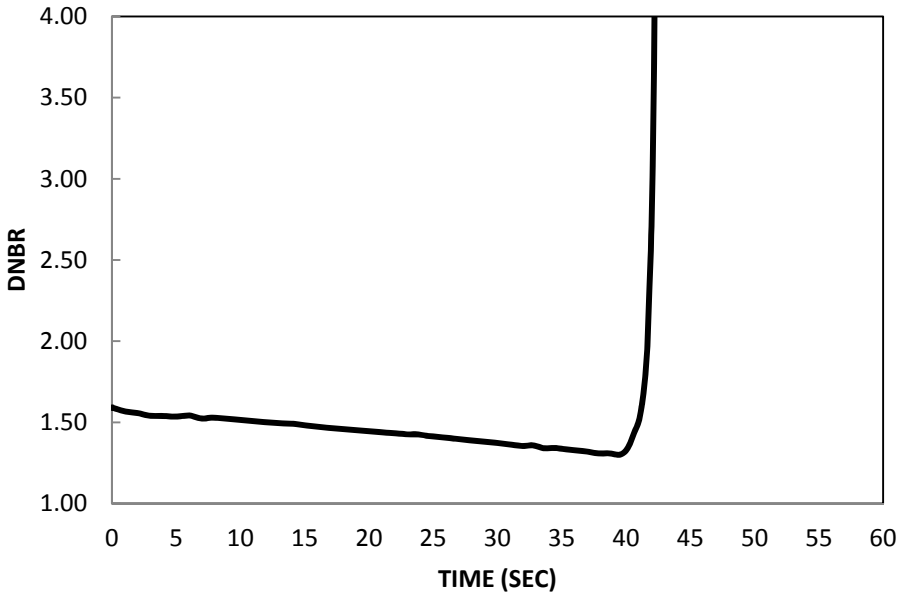

DNBR Transient for Accidental Depressurization – Advanced W17 HTP Fuel

SQN

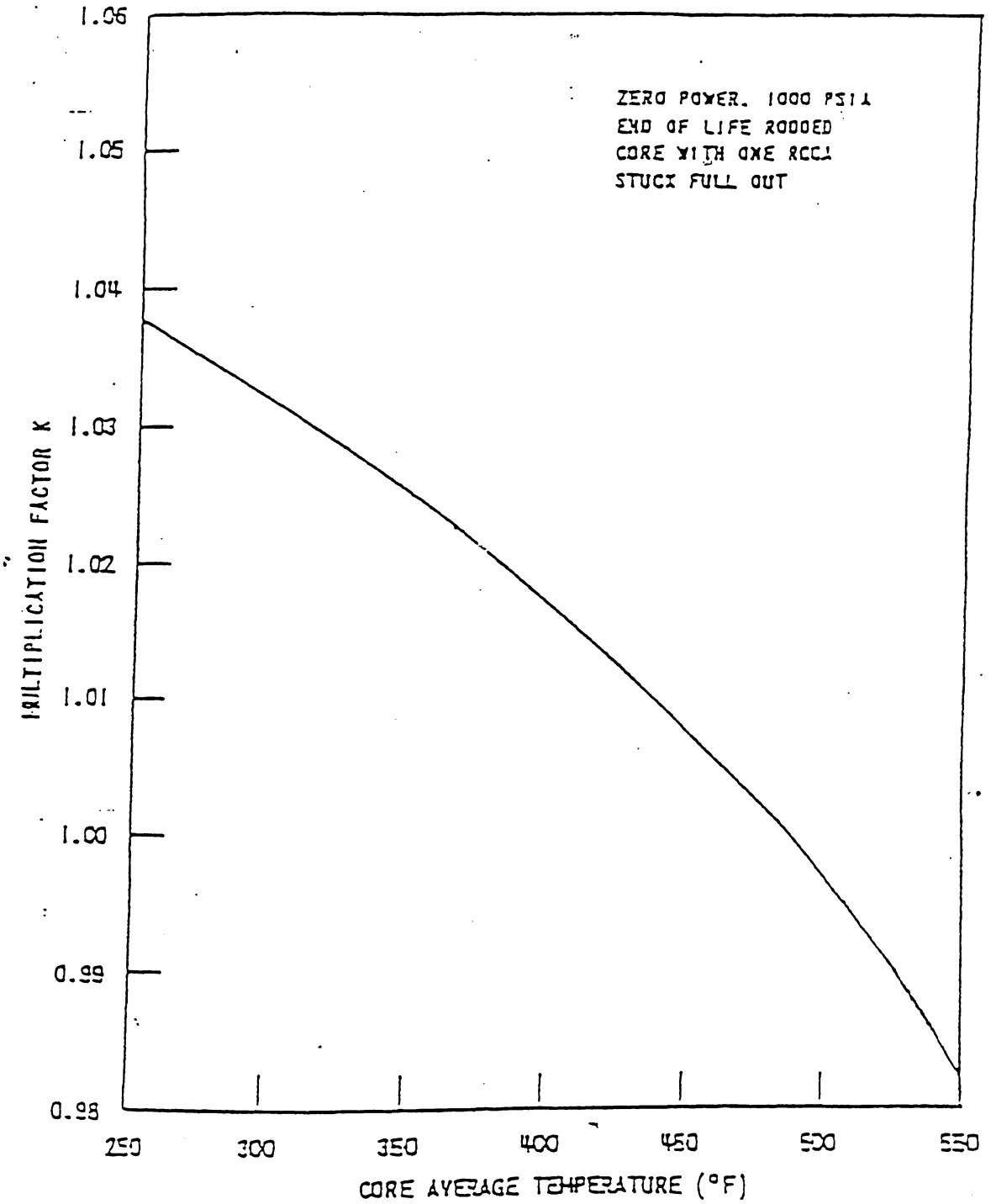

FIGURE 15.2.13-1 VARIATION OF Keff with CORE TEMPERATURE

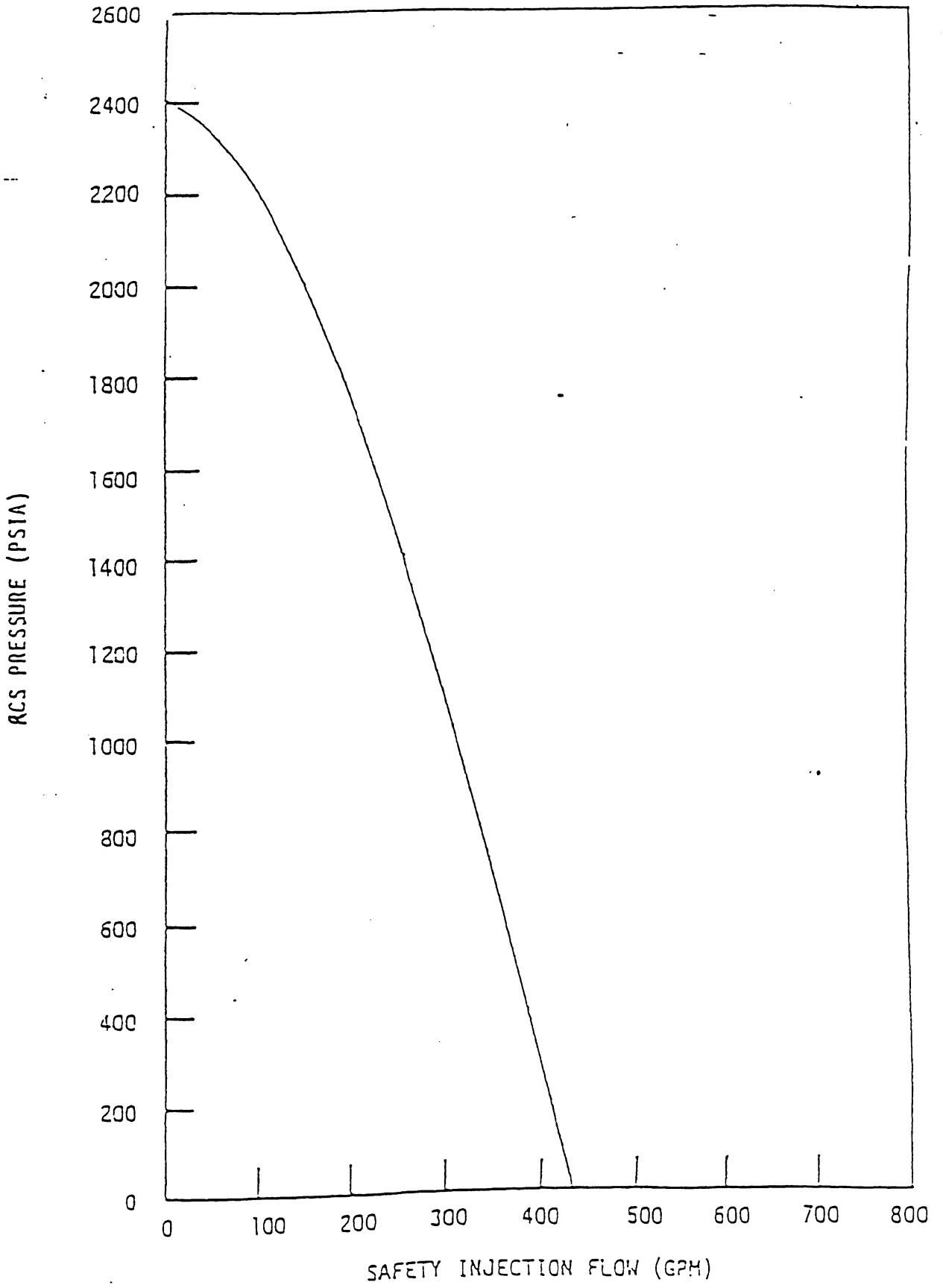

FIGURE 15.2.13-2 SAFETY INJECTION CURVE

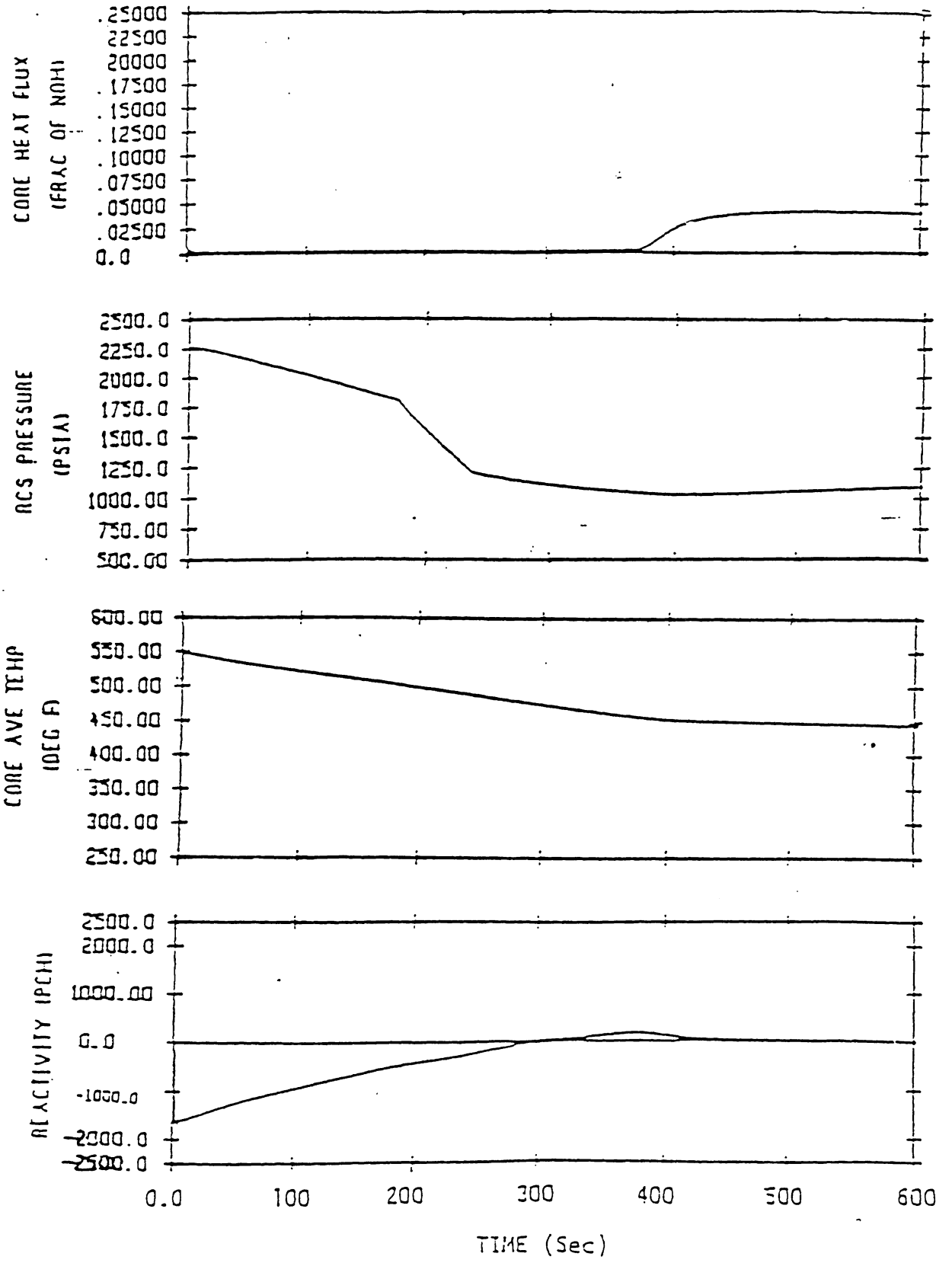

FIGURE 15.2.13-3 TRANSIENT RESPONSE FOR A STEAMLINE BREAK EQUIVAENT TO 228 LBS./SEC.AT 1015 PSIA WITH OUTSIDE POWER AVAILABLE

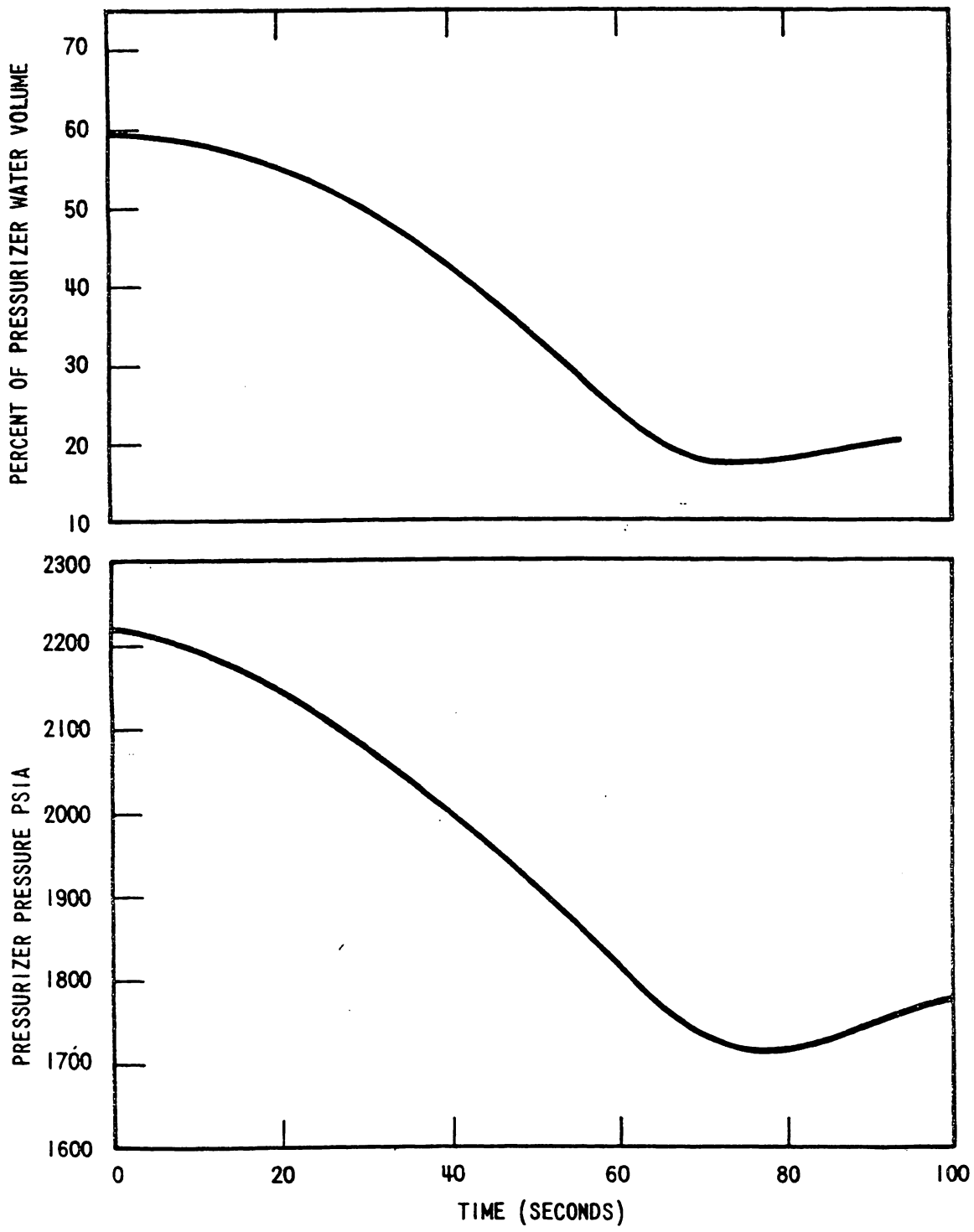

Figure 15.2.14-1 **Spurious Actuation of Safety Injection System at Power**

6937-129

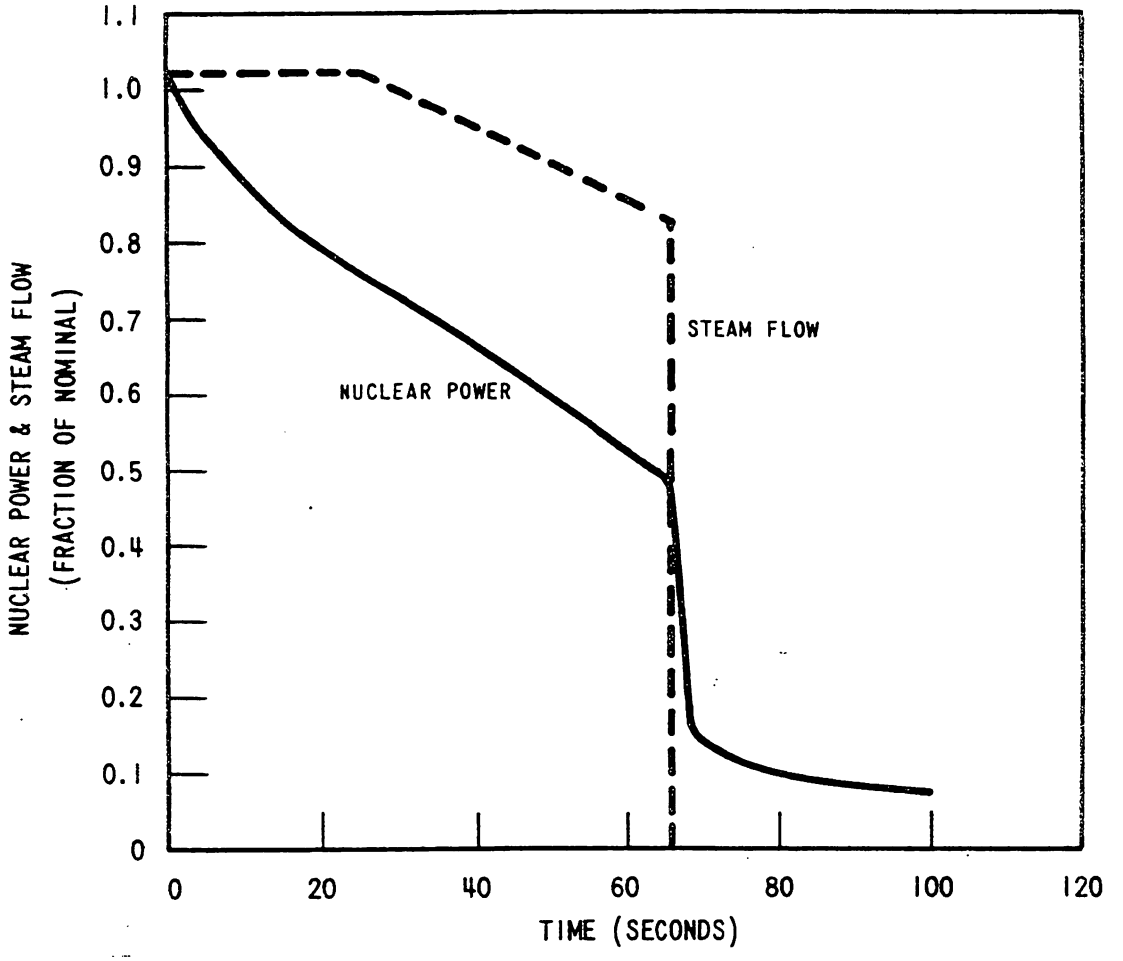

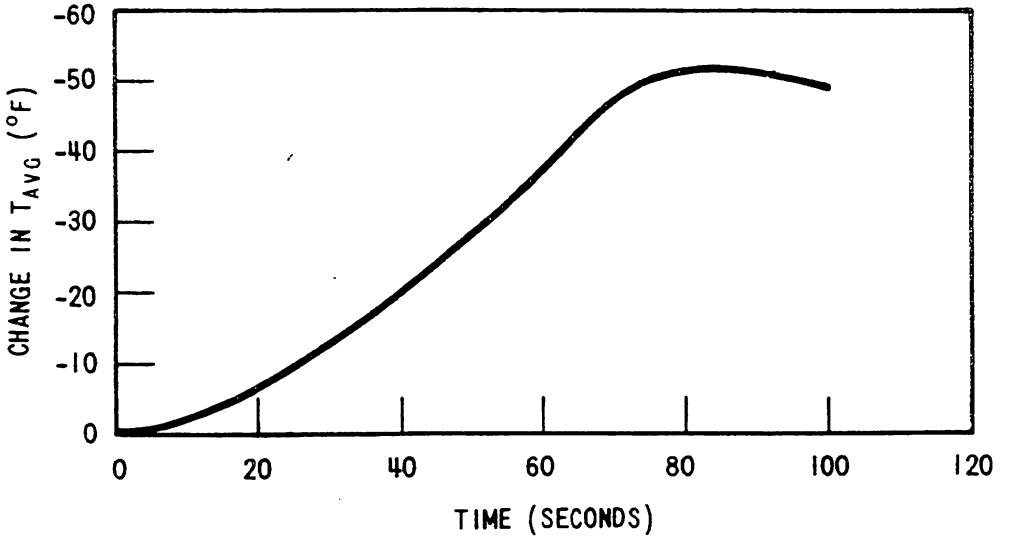

Figure 15.2.14-2 **Spurious Actuation of Safety Injection System at Power**

15.3 CONDITION III - INFREQUENT FAULTS

By definition Condition III occurrences are faults which may occur very infrequently during the life of the plant. They will be accommodated with the failure of only a small fraction of the fuel rods although sufficient fuel damage might occur to preclude resumption of the operation for a considerable outage time. The release of radioactivity will not be sufficient to interrupt or restrict public use of those areas beyond the exclusion radius. A Condition III fault will not, by itself, generate a Condition IV fault or result in a consequential loss of function of the Reactor Coolant System or containment barriers. For the purposes of this report the following faults have been grouped into this category:

1. Loss of Reactor Coolant, from Small Ruptured Pipes or from Cracks in Large Pipes, which actuates Emergency Core Cooling.

2. Minor Secondary System Pipe Break.

3. Inadvertent Loading of a Fuel Assembly into an Improper Position.

4. Complete Loss of Forced Reactor Coolant Flow.

5. Waste Gas Decay Tank Rupture.

6. Single Rod Cluster Control Assembly Withdrawal at Full Power.

7. Steam Line Break Coincident With Rod Withdrawal at Power.

The time sequence of events during applicable Condition III faults 1, 4, and 7 above is shown in Tables 15.3.1-1, 15.3.4-1, and 15.3.7-1.

15.3.1 Loss of Coolant from Small Ruptured Pipes or from Cracks in Large Pipes Which Actuate the Emergency Core Cooling System

15.3.1.1 Identification of Causes and Accident Description

A loss of coolant accident (LOCA) is defined as a rupture of the reactor coolant system (RCS) piping or of any line connected to the system. See Section 3.6 for a more detailed description of the loss of reactor coolant accident boundary limits. Ruptures of small cross section will cause a loss of coolant at a rate that can be accommodated by the charging pumps. Pumped flow would maintain an operational water level in the pressurizer and permit the operator to execute an orderly shutdown.

The maximum break size for which the normal makeup system can maintain the pressurizer level is obtained by comparing the calculated flow from the RCS through the postulated break against the charging pump makeup flow at normal RCS pressure. Makeup flow rate from one centrifugal charging pump is typically adequate to sustain pressurizer level at 2250 psia for a break through a 0.375-inch diameter hole. Should a larger break occur, inventory loss through the break results in a reduction in pressurizer level and pressure. These breaks are considered small breaks of consequence and are examined in the analysis of this section.

At the time of break initiation, the plant is assumed to be operating at 102% of full power. Heat produced in the reactor core is exactly balanced by the heat transferred to the secondary side of the steam generator. As the RCS depressurizes, safety injection is initiated and the reactor is tripped on low pressurizer pressure. After reactor trip, heat continues to be added to the reactor coolant system by core decay heat and the hot passive heat structures.

The reactor coolant pumps are assumed to trip coincident with reactor trip. The safety injection signal isolates the main feedwater. Secondary inventory is subsequently controlled by auxiliary feedwater. The turbine will trip on reactor trip.

An important phenomenon during the small break LOCA transient is the occurrence of loop seal clearing, which is accompanied by a momentary core level depression. The momentary core depression causes a brief heatup in the upper core region. After loop seal clearing, the break mass flow rate is reduced with a phase change (predominantly liquid to predominantly steam) at the break. As a result of loop seal clearing, the RCS depressurizes; the rate of depressurization is primarily a function of break size and the number of loop seals clearing. The occurrence of loop seal clearing also marks the initiation of the core boildown phase of the transient.

During the boildown phase of the transient, a prolonged core heatup may occur depending on the ECCS pump performance. The ECCS injection rate is dependent on the system depressurization rate. Smaller breaks result in lower depressurization rates and lower ECCS flow but the mass lost to the break is also low, reducing the possibility of core uncovery. Larger small breaks cause a rapid depressurization of the RCS and the ECCS flow is sufficiently high to maintain the core in a liquid-covered state.

Intermediate small breaks are typically the worst in terms of core heatup. The break is large enough to cause a significant RCS mass loss. The depressurization rate is slow enough for these breaks to minimize pumped injection and the core may become uncovered.

Ultimately, the small break transient is mitigated by the pumped ECCS injection and/or the passive (accumulator) injection. Reactor power is reduced rapidly by reactor trip and the injection of borated water by the ECCS. The ECCS injection also serves to make up for the mass lost to the break and floods the core, ensuring prolonged decay heat removal.

15.3.1.2 Small Break LOCA Evaluation Model

The AREVA S-RELAP5 SBLOCA evaluation model for event response of the primary and secondary systems and hot fuel rod used in this analysis (Reference 1) consists of two computer codes. The appropriate conservatisms, as prescribed by Appendix K of 10 CFR 50, are incorporated. This methodology has been reviewed and approved by the NRC to perform SBLOCA analyses. The two AREVA computer codes used in this analysis are:

(1) The RODEX2-2A code (Reference 2) was used to determine the burnup-dependent initial fuel rod conditions for the system calculations.

(2) The S-RELAP5 code (Reference 9) was used to predict the thermal-hydraulic response of the primary and secondary sides of the reactor system and the hot rod response.

The gap conditions used to initialize S-RELAP5 are taken at EOC, consistent with an EOC top-peaked axial power distribution. The use of EOC fuel rod conditions along with an EOC power shape is bounding of BOC because (1) the gap conductance is higher at EOC, and (2) the power shape is more top-skewed at EOC. The initial stored energy, although higher at BOC, has a negligible impact on SBLOCA results since the stored energy is dissipated long before core uncovery.

Unit 1 Exception

Technical Specification changes associated with the SBLOCA Evaluation Methodology update described above will be staggered for the two Sequoyah units. Unit 1 will lag Unit 2. In the interim, the methods used for SBLOCA licensing analyses supporting Unit 1 remain the predecessor methods, governed by References 15, 16, and 17 as described in the following paragraphs.

The RELAP5/MOD2-B&W code is used to predict the RCS thermal-hydraulic and core heatup responses to a small break LOCA. The code has been approved by the NRC for licensing application, and is documented in detail in Reference 15. Methods and models associated with the application of RELAP5/MOD2-B&W to small break LOCA analysis are described at length in Volume II of Reference 16.

The Sequoyah reactor core model is divided radially into two regions. One region representing the hot channel and the other representing the average channel (remainder of the core). The core is further segmented axially to allow detailed computation of hot assembly cladding and vapor temperatures and provides resolution of core mixture level to within approximately 0.5 feet. Fuel pin initial conditions parameters are calculated with the TACO3 computer code (Reference 17). The RCS model contains sufficient detail to represent the coolant void distribution that affects the system hydrostatic balance during a small break.

The steam generator tube region is divided into two radial regions. One region for the shortest half of the tubes and the other region for the remainder of the tubes. This provides sufficient modeling accuracy to simulate tube length-induced draining effects.

15.3.1.3 Small Break LOCA Spectrum Analysis

The break spectrum calculations were executed for breaks of 1.00, 2.00, 2.75, 3.00, 3.50, 4.00, 4.50, 4.75, 4.90, 4.95, 5.00, 5.05, 5.10, 5.12, 5.13, 5.14, 5.15, 5.20, 5.25, 5.50, 5.75, 6.00, 6.50, 7.00, 8.00, 8.50, 9.00, 9.75, 9.76, 9.77 and 9.78-inch diameter (the 9.76-inch diameter break corresponds to an area equal to 10% of the cold leg area). A 8.75-inch diameter accumulator line break, located at the check valve nearest to the cold leg and a 1.34-inch diameter centrifugal charging line break, located in the top of the pump discharge pipe, were also analyzed.

The axial peaking distribution assumed in all of the small breaks is shown in Figure 15.3.1-1. The power peaks at the 10.0-ft core elevation, maximizes local power in the upper region of the core, and is conservative for small break analysis because of the top-down core uncovering process. As the core uncovers, the cladding in the upper elevations of the core heats up and is sensitive to the local power at that elevation. The cladding temperature in the lower elevation of the core, below the two-phase mixture height, remains near the coolant temperature. The peak power used in the analysis is based on a total peaking factor, F_q, of 2.65.

The analysis of record was performed assuming a single failure in pumped ECCS injection that minimizes RCS liquid inventory during the small break transient. One train of charging, SI, and RHR pumps are assumed operable and aligned for injection. The total flow rates associated with these systems are provided in Figure 15.3.1-2. For the charging line break, the charging flow to the intact loops is conservatively neglected.

Table 15.3.1-1 presents a time sequence of events predicted in the small break LOCA spectrum studies and Table 15.3.1-2 summarizes the results of the hot rod heatup calculations. Principal parameters of interest resulting from the 9.76-inch break case are presented in Figures 15.3.1-3 through 15.3.1-7. These figures depict primary system pressure, leak flow rate, mixture level, loop seal levels, and hot spot cladding temperature.

15.3.1.4 Conclusions

This analysis supports implementation for the transition from AREVA Mark-BW fuel to AREVA M5-clad HTP fuel. The break spectrum included pump discharge cold leg piping breaks ranging from 1.0 inch diameter to 9.78 inch diameter breaks. The charging and accumulator line breaks and the reactor coolant pump trip sensitivity study were also included. The small break LOCA event model is configured to simulate RSGs in both Sequoyah Unit 1 and Unit 2.

The results of the small break LOCA spectrum studies performed with the S-RELAP5 evaluation model show that the small break LOCA is not limiting with respect to large break LOCA results. The predicted peak cladding temperature is 1470ºF for the pump discharge break with an area equivalent to 9.76-inch diameter pipe for the Analysis of Record. With the limited temperature excursion, the local and whole-core metal-water reaction percentages are negligible. The hot pin thermal transient is insufficient to cause significant fuel pin deformation and the core remains amenable to cooling. Further, recovery of the core is demonstrated and continued operation of the ECCS will guarantee long-term cooling. The analysis, therefore, demonstrates that a significant safety margin exists between the calculated results and the 10 CFR 50.46 limits and that compliance with regulatory acceptance criteria is met.

The RCP trip sensitivity study (reference 18) shows a 2 minute delay in the tripping of the RCPs from loss of subcooling or from a SI signal does not result in a PCT greater than the limiting case, which assumes a RCP trip at break initiation. A generic study (reference 19) performed in support of the EOPs shows at least 5 minutes is available to trip the RCPs before PCT will exceed its limit.

An ECCS flow interruption evaluation was performed to address a single failure to isolate an RHR pump from the RWST during switchover. This could result in stopping the ECCS pumps to manually realign them to the sump. The evaluation conservatively considered the flow interruption in addition to the AOR single failure of an entire ECCS train. The evaluation concluded that a 5 minute flow interruption could be tolerated without exceeding the PCT limit.

15.3.2 Minor Secondary System Pipe Breaks

15.3.2.1 Identification of Causes and Accident Description

Included in this grouping are ruptures of secondary system lines which would result in steam release rates equivalent to a 6 inch diameter break or smaller.

15.3.2.2 Analysis of Effects and Consequences

Minor secondary system pipe breaks must be accommodated with the failure of only a small fraction of the fuel elements in the reactor. Since the results of analysis presented in Subsection 15.4.2 for a major secondary system pipe rupture also meet this criteria, separate analysis for minor secondary system pipe breaks is not required.

The analysis of the more probable accidental opening of a secondary system steam dump, relief or safety valve is presented in Subsection 15.2.13. These analyses are illustrative of a pipe break equivalent in size to a single valve opening.

15.3.2.3 Conclusions

The analysis presented in Subsection 15.4.2 demonstrate that the consequences of a minor secondary system pipe break are acceptable since a DNBR of less than 1.3 does not occur even for a more critical major secondary system pipe break.

15.3.3 Inadvertent Loading of a Fuel Assembly into an Improper Position

15.3.3.1 Identification of Causes and Accident Description

Fuel and core loading errors such as can arise from the inadvertent loading of one or more fuel assemblies into improper positions, loading a fuel rod during manufacture with one or more pellets of the wrong enrichment or the loading of a full fuel assembly during manufacture with pellets of the wrong enrichment will lead to increased heat fluxes if the error results in placing fuel in core positions calling for fuel of lesser enrichment. Also included among possible core loading errors is the inadvertent loading of one or more fuel assemblies requiring burnable poison rods into a new core without burnable poison rods.

Any error in enrichment, beyond the normal manufacturing tolerances, can cause power shapes which are more peaked than those calculated with the correct enrichments. The incore system of moveable flux detectors which is used to verify power shapes at the start of life is capable of revealing any assembly enrichment error or loading error which causes power shapes to be peaked in excess of the design value.

To reduce the probability of core loading errors, each fuel assembly is marked with an identification number and loaded in accordance with a core loading diagram. During core loading the identification number will be checked before each assembly is moved into the core. Serial numbers read during fuel movement are subsequently recorded on the loading diagram as a further check on proper placing after the loading is completed.

The power distortion due to any combination of misplaced fuel assemblies would significantly raise peaking factors and would be readily observable with in-core flux monitors. In addition to the flux monitors, thermocouples are located at the outlet of about one third of the fuel assemblies in the core. There is a high probability that these thermocouples would also indicate any abnormally high coolant enthalpy rise. In-core flux measurements are taken during the startup subsequent to every refueling operation.

15.3.3.2 Analysis of Effects and Consequences

Method of Analysis

Steady state power distribution in the x-y plane of the core are calculated using the TURTLE (Reference 5) code based on macroscopic cross section calculated by the LEOPARD (Reference 6) code. A discrete representation is used wherein each individual fuel rod is described by a mesh interval. The power distributions in the x-y plane for a correctly loaded core assembly are also given in Chapter 4 based on enrichments given in that section.

For each core loading error case analyzed, the percent deviations from detector readings for a normally loaded core are shown at all-in-core detector locations (see Figures 15.3.3-1 to 15.3.3-5, inclusive).

Results

The following core loading error cases have been analyzed:

Case A:

Case in which a Region 1 assembly is interchanged with a Region 3 assembly. The particular case considered was the interchange of two adjacent assemblies near the periphery of the core (see Figure 15.3.3-1).

Case B:

Case in which a Region 1 assembly is interchanged with a neighboring Region 2 fuel assembly. Two analyses have been performed for this case (see Figures 15.3.3-2 and 15.3.3-3).

In Case B-1, the interchange is assumed to take place with the burnable poison rods transferred with the Region 2 assembly mistakenly loaded into Region 1.

In Case B-2, the interchange is assumed to take place closer to core center and with burnable poison rods located in the correct Region 2 position but in a Region 1 assembly mistakenly loaded into the Region 2 position.

Case C:

Enrichment error: Case in which a Region 2 fuel assembly is loaded in the core central position (see Figure 15.3.3-4).

Case D:

Case in which a Region 2 fuel assembly instead of a Region 1 assembly is loaded near the core periphery (see Figure 15.3.3-5).

15.3.3.3 Conclusions

Fuel assembly enrichment errors would be prevented by administrative procedures implemented in fabrication.

In the event that a single pin or pellet has a higher enrichment than the nominal value, the consequences in terms of reduced DNBR and increased fuel and clad temperatures will be limited to the incorrectly loaded pin or pins.

Fuel assembly loading errors are prevented by administrative procedures implemented during core loading. In the unlikely event that a loading error occurs, analyses in this section confirm that resulting power distribution effects will either be readily detected by the in-core moveable detector system or will cause a sufficiently small perturbation to be acceptable within the uncertainties allowed between nominal and design power shapes.

This event is characterized by the misplacement of a fuel assembly in the reactor core. The event is statically examined using various neutronics codes. No system interaction or effects are included in the event analyses. The results of the analyses are completely independent of steam generator design. Thus, results with OSGs are equally applicable to operation of Sequoyah Unit 1 and Unit 2 with the RSGs.

15.3.4 Complete Loss of Forced Reactor Coolant Flow

15.3.4.1 Identification of Causes and Accident Description

A complete loss of forced reactor coolant flow may result from a simultaneous loss of electrical supplies to all reactor coolant pumps. If the reactor is at power at the time of the accident, the immediate effect of loss of coolant flow is a rapid increase in the coolant temperature. This increase could result in DNB with subsequent fuel damage if the reactor were not tripped promptly. The following provide necessary protection against a loss of coolant flow accident:

1. Undervoltage or underfrequency on reactor coolant pump power supply busses.

2. Low reactor coolant loop flow.

The reactor trip on reactor coolant pump bus undervoltage is provided to protect against conditions which can cause a loss of voltage to all reactor coolant pumps, i.e., station blackout. This function is blocked below approximately 10 percent power (Permissive 7).

The reactor trip on reactor coolant pump underfrequency is provided to open the reactor coolant pump breakers and trip the reactor for an underfrequency condition, resulting from frequency disturbances on the major power grid. The trip disengages the reactor coolant pumps from the power grid so that the pumps' kinetic energy is available for full coastdown.

The reactor trip on low primary coolant loop flow is provided to protect against loss of flow conditions which affect only one reactor coolant loop. It also serves as a backup to the undervoltage and underfrequency trips. This function is generated by two out of three low flow signals per reactor coolant loop. Above approximately 35 percent power (Permissive 8), low flow in any loop will actuate a reactor trip. Between approximately 10 percent power and 35 percent power (Permissive 7 and Permissive 8), low flow in any two loops will actuate a reactor trip.

Normal power for the reactor coolant pumps is from the unit station service transformers. Each reactor coolant pump is attached to a separate unit board and its supplied power is not interrupted for a turbine or generator trip. These pumps will continuously supply coolant flow to the core.

Although the original analysis was performed under the assumptions of a Condition III event, for the Cycle 9 reload, this event is analyzed with Condition II acceptance criteria.

15.3.4.2 Analysis of Effects and Consequences

Method of Analysis

The complete loss of flow transient has been analyzed for a loss of four pumps with four loops in operation.

The transient is analyzed using two digital computer codes. First, the RELAP5/MOD2-B&W code (Reference 11) is used to calculate the loop and core flow during the transient, the time of reactor trip based on the calculated flows, the nuclear power transient, and the primary system pressure and temperature transients. The system and core power responses from RELAP5/MOD2-B&W are used to determine the DNBR using the LYNXT code (Reference 12) and a statistical core design methodology (Reference 11). The DNBR transients presented represent the thermal-hydraulic conditions of the average channel. The DNBR curve shown is the minimum value at the hot spot of the hot channel.

The method of analysis and the assumptions made regarding initial operating conditions and reactivity coefficients are identical to those discussed in Section 15.2, except that following the loss of supply to all pumps at power, a reactor trip is actuated by either bus undervoltage or bus underfrequency. To maximize the power response during the event, the least negative Doppler power coefficient and +7.0 pcm/°F moderator coefficient are assumed.

The calculated sequence of events is shown in Table 15.3.4-1 for the case analyzed. Figures 15.3.4-1 and 15.3.4-2 show the core flows, thermal and neutron power and DNB ratios as a function of time for the case. The reactor is assumed to trip on the undervoltage signal. The DNBR was greater than the safety analysis limit for the duration of the event.

15.3.4.3 Conclusions

The analysis demonstrates that for the complete loss of forced reactor coolant flow, the DNBR does not decrease below the safety analysis limit during the transient and thus there is no clad damage or release of fission products to the Reactor Coolant System.

Analysis has shown that for frequency decay rates less than 6.8 Hz/second, no reactor coolant pump trip is necessary. A grid analysis was provided for the Sequoyah Nuclear Plant which determined that, for the worst case, the grid decay rate is less than 5.0 Hz/second.

The Complete Loss of Forced Reactor Coolant Flow event has been evaluated with respect to the CENP-Westinghouse steam generator replacement at Sequoyah Unit 1 and Unit 2. The evaluation concludes that the parameters important to the consequences of this event are not adversely affected by the RSG.

15.3.5 Waste Gas Decay Tank Rupture

15.3.5.1 Identification of Causes and Accident Description

The Gaseous Waste Processing System is designed to remove fission product gases from the reactor coolant. The system consists of a closed loop with waste gas compressors, hydrogen analyzers, waste gas decay tanks for service at power and other waste gas decay tanks for service at shutdown and startup.

The maximum amount of waste gases stored occurs after a refueling shutdown at which time the gas decay tanks store the radioactive gases stripped from the reactor coolant.

The accident is defined as an unexpected and uncontrolled release of radioactive xenon and krypton fission product gases stored in a waste decay tank as a consequence of a failure of a single gas decay tank or associated piping.

15.3.5.2 Analysis of Effects and Consequences

For the analyses and consequences of the postulated waste gas decay tank rupture, please refer to Subsection 15.5.2.

15.3.6 Single Rod Cluster Control Assembly Withdrawal at Full Power

15.3.6.1 Identification of Causes and Accident Description

No single electrical or mechanical failure in the rod control system could cause the accidental withdrawal of a single rod cluster control assembly from the inserted bank at full power operation.

The operator could deliberately withdraw a single rod cluster control assembly in the control bank. This feature is necessary in order to retrieve an assembly should one be accidentally dropped. In the extremely unlikely event of simultaneous electrical failures which could result in single rod cluster control assembly withdrawal, rod deviation and rod control urgent failure would both be displayed on the plant annunciator, and the rod position indicators would indicate the relative positions of the assemblies in the bank. The urgent failure alarm also inhibits automatic rod motion in the group in which it occurs. Withdrawal of a single rod cluster control assembly by operator action, whether deliberate or by a combination of errors, would result in activation of the same alarm and the same visual indications.

Each bank of rod cluster control assemblies in the system is divided into two groups of 4 mechanisms each, except control bank A which is comprised of two groups of two mechanisms each and group 2 of control bank D which consists of 5* mechanisms. The rods comprising a group operate in parallel through multiplexing thyristors. The two groups in a bank move sequentially such that the first group is always within one step of the second group in the bank. A definite schedule of actuation and deactuation of the stationary gripper, movable gripper, and lift coils of a mechanism is required to withdraw the rod cluster control assembly attached to the mechanism. Since the four stationary gripper, movable gripper, and lift coils associated with the four rod cluster control assemblies of a rod group are driven in parallel, any single failure which would cause rod withdrawal would affect a minimum of one group, or 4 rod cluster control assemblies except for control banks A (groups 1 and 2) and D (group 2). Mechanical failures either are in the direction of insertion, or immobility.

In the unlikely event of multiple failures which result in continuous withdrawal of a single rod cluster control assembly, it is not possible, in all cases, to provide assurance of automatic reactor trip such that core safety limits are not violated. Withdrawal of a single rod cluster control assembly results in both positive reactivity insertion tending to increase core power, and an increase in local power density in the core area "covered" by the rod cluster control assembly.

15.3.6.2 Analysis of Effects and Consequences

Method of Analysis

Power distributions within the core are calculated by the TURTLE (Reference 5) code based on macroscopic cross section generated by LEOPARD (Reference 6). The peaking factors calculated by TURTLE are then used by THINC to calculate the minimum DNB for the event. The case analyzed was for the worst rod withdrawn from bank D inserted at the insertion limit, with the reactor initially at full power. FDH for this case was 1.71 including appropriate allowances for calculational uncertainties.

Results

Two cases have been considered as follows:

1. If the reactor is in the manual control mode, continuous withdrawal of a single rod cluster control assembly results in both an increase in core power and coolant temperature, and an increase in the local hot channel factor in the area of the failed rod cluster control assembly. In

*U1 is permitted to operate with location H-8 Control Rod Assembly removed during U1C24 and U1C25. Therefore Group 2 of Control Bank D will have 4 mechanisms.

*U2 is permitted to operate with location H-8 Control Rod Assembly removed during Unit 2 Cycle 24 (U2C24) and U2C25. Therefore, Group 2 of Control Bank D will have 4 mechanisms.

terms of the overall system response, this case is similar to those presented in Subsection 15.2.2; however, the increased local power peaking in the area of the withdrawn rod cluster control assembly results in lower minimum DNBRs than for the withdrawn bank cases. Depending on initial bank insertion and location of the withdrawn rod cluster control assembly, automatic reactor trip may not occur sufficiently fast to prevent the minimum core DNB ratio from falling below the safety analysis limit. Evaluation of this case at the power and coolant conditions at which the overtemperature ΔT trip would be expected to trip the plant shows that an upper limit for the number of rods with a DNBR less than the safety analysis limit is 5 percent.

2. If the reactor is in automatic control mode, withdrawal of a single rod cluster control assembly will result in the immobility of the other rod cluster control assemblies in the controlling bank. The transient will then proceed in the same manner as Case 1 described above. For such cases as above a trip will ultimately ensue, although not sufficiently fast in all cases to prevent a minimum DNB ratio in the core of less than the safety analysis limit.

15.3.6.3 Conclusions

For the case of one rod cluster control assembly fully withdrawn, with the reactor in the automatic or the manual control mode and initially operating at full power with Bank D at the insertion limit, an upper bound of the number of fuel rods experiencing a DNBR of less than 1.3 is 5 percent of the total fuel rods in the core.

For both cases discussed, the indicators and alarms mentioned would function to alert the operator to the malfunction before DNB could occur. For case 2 discussed above, the insertion limit alarms (low and low-low alarms) would also serve in this regard.

The Single Rod Cluster Control Assembly Withdrawal at Full Power event has been evaluated with respect to the CENP-Westinghouse steam generator replacement at Sequoyah Unit 1 and Unit 2. The evaluation concludes that the parameters important to the consequences of this event are not adversely affected by the RSG.

15.3.7 Steam Line Break Coincident with Rod Withdrawal at Power (SLB c/w RWAP)

15.3.7.1 Identification of Causes and Accident Description

In September of 1979, IE-79-22 entitled "Qualification of Control Systems" was issued by the United States Nuclear Regulatory Commission (USNRC) identifying a potential unreviewed safety question resulting from Control and Protection Systems interactions. One of the postulated scenarios that was identified was the operation of the non-safety grade automatic rod control system following a steam line break inside or outside of containment. The automatic rod control system derives signals from the Nuclear Instrumentation System (specifically the excore power range neutron detectors) and the turbine impulse pressure, among other inputs, to determine if control rod motion is required. Since a steam line break may occur inside containment in the vicinity of the excore detectors (which are classified as Category "C" equipment per NUREG-0588, Revision 1, Appendix E), or outside containment in the vicinity of the turbine impulse pressure transmitters, the automatic rod control

system may be exposed to an adverse environment. This equipment is not qualified to preclude the steam line break from causing a control rod (bank) withdrawal due to an adverse environment. In addition to the potential rod withdrawal, the Power Range High Neutron Flux and OTΔT reactor protection trip functions may not be available as a result of the harsh environmental conditions which may exist.

15.3.7.2 Method of Analysis

This transient is simulated using the RELAP5/MOD2 and LYNXT codes (Reference 1 and 12) by modeling a steam line break in coincidence with the withdrawal of control bank D at hot full power (HFP) conditions. A spectrum of steam line break sizes were analyzed to determine the limiting condition. The reactivity assumption associated with the rod withdrawal was 15 pcm per second, which is based on the maximum speed of the rod speed controller (45 inches per minute) and the maximum differential rod worth of control bank D at HFP conditions (20 pcm per inch). Reactivity assumptions are verified each fuel cycle as part of the reload safety evaluation.

In the RELAP5/MOD2 system analysis model, the Doppler Power Coefficient was allowed to vary with power and the Moderator Temperature Coefficient was allowed to vary with core average temperature. Conservative values of Doppler Coefficient vs. Power and Moderator Coefficient vs. Temperature were used.

The following reactor trip functions may actuate during this postulated transient:

- Overpower ΔT (OPΔT): typically actuated for the small-to-intermediate breaks
- Low Steamline Pressure - Safety Injection (LSP-SI): typically actuated for the large breaks

15.3.7.3 Results

With respect to the minimum Departure from Nucleate Boiling Ratio (DNBR), the limiting case was for ton OPΔT having two-out-of-four coincidence logic. Furthermore, the measured vessel ΔT lead/lag values associated with this trip function were 5 seconds and 3 seconds, respectively. The results demonstrate that the DNB design basis was not met. A set of peaking limits were developed which protect against DNB on a cycle-specific basis; these limits much be used to prove that no DNB will occur during this event in the given cycle or to conduct a census of the pins which may experience DNB to confirm that radiological release limits are obeyed for this event in the given cycle. The sequence of events for this case is presented in Table 15.3.7-1. Plots associated with this transient are presented in Figures 15.3.7-1a thru 15.3.7-3a for AREVA Mark-BW fuel and Figures 15.3.7-1b thru 15.3.7-3c for AREVA HTP fuel.

15.3.8 References

1. EMF-2328(P)(A) Revision 0, “PWR Small Break LOCA Evaluation Model, S-RELAP5 Based,” March 2001.

2. EMF-2146(P) Revision 2, “RODEX2 Theory Manual,” October 2002.

3. W. A. Bezalla, C. L. Caso, A. C. Spencer, "LOCTRA-R2 Program Loss-of-Coolant Transient Analysis," WCAP 7835, January 1972.

4. S. Altomare and R. F. Barry, "The TURTLE 24.0 Diffusion Depletion Code," WCAP-7758, September 1971.

5. R. F. Barry, "LEOPARD - A Spectrum Dependent Non-Spatial Depletion Code for the IBM-7094," WCAP 3269-26, September 1963.

6. F. M. Bordelon, "Calculation of Flow Coastdown After Loss of Reactor Coolant Pump (PHOENIX Code)," WCAP 7969, September 1972.

7. Burnett, T. W. T., et al., "LOFTRAN Code Description," WCAP-7907-P-A (Proprietary), WCAP-7907-A (Non-Proprietary), April 1984).

8. Hargrove, H. G., "FACTRAN, A Fortran-IV Code for Thermal Transients in a UO2 Fuel Rod," WCAP-7908-A, December 1989.

9. .EMF-2100(P) Revision 16, “S-RELAP5 Models and Correlations Code Manual,” December 2011.

10. M.Y. Young, et. Al., “Westinghouse Emergency Core Cooling System Evaluation Model Application to Plants Equipped with Upper Head Injection,” WCAP-8479 Rev. 2 (Proprietary), WCAP-8480 Rev. 2 (Non-Proprietary), January 1975.

11. BAW-10170, "Statistical Core Design for Mixing Vane Cores," December 1988.

12. BAW-10156, "LYNXT-Core Transient Thermal Hydraulic Program," August 1993.

13. Document No. 77-5016198, “Framatome ANP, Replacement Steam Generator Report for Sequoyah Unit 1.”

14. Document No. 77-9142036, AREVA NP, “Replacement Steam Generator Report for TVA Sequoyah Unit 2.”

15. BAW-10164, R06, “RELAP5/MOD2-B&W, an Advanced Computer Program for LOCA and Non-LOCA Transient Analysis,” June 2007.

16. BAW-10168, R03, “BWNT Loss-of-Coolant Accident Evaluation Model for Recirculating Steam Generator Plants,” December 1996.

17. BAW-10162, “TACO3-Fuel Pin Thermal Analysis Code,” October 1989.

18. Document No. ANP-2971(P), Revision 1, “Sequoyah Units 1 and 2 HTP Fuel S-RELAP5 Small Break LOCA Analysis, May 2011.”

19. WCAP-9584 and WOG DW-11-004, “Analysis of Delayed Reactor Coolant Pump Trip During Small Loss of Coolant Accidents.”

TABLE 15.3.1-1

SMALL BREAK LOCA TIME SEQUENCE OF EVENTS, sec

Break diameter (in)	6.50	7.00	8.00	9.00	9.75	9.76	9.77	9.78
Break Open	0	0	0	0	0	0	0	0
Low Pressurizer Pressure Trip	0.6	0.5	0.5	0.5	0.4	0.4	0.4	0.4
Low Pressurizer Pressure DIAS Setpoint	9	8	8	7	7	7	7	7
HHSI Flow Begins	46	46	46	46	46	46	46	46
Setpoint to start Aux. Feedwater Pump	7	7	7	7	7	7	7	7
Loop seal 1 clears	146	130	126	98	92	90	90	98
Loop seal 2 clears	146	128	126	98	92	92	98	98
Loop seal 3 clears	146	128	126	98	92	92	98	98
Loop seal 4 clears	152	142	136	108	104	102	106	106
Break uncovers	160	138	132	90	86	86	92	92
Accumulator injection begins	276	234	166	130	110	110	112	112
PCT occurs	164	182	175	149	132	143	139	136
Time of core uncovery	82	78	56	46	40	40	40	40

TABLE 15.3.1-2

SMALL BREAK LOCA RESULTS

Break diameter (in)	**6.50**	**7.00**	**8.00**	**9.00**	**9.75**	**9.76**	**9.77**	**9.78**
Peak Clad Temperature (ºF)	1095.8	1214.4	1367.6	1341.5	1385.7	1469.3	1325.6	1379.4
Time of PCT (sec)	164	182	175	149	132	143	139	136
PCT Elevation (ft)	10.625	10.625	10.625	10.625	10.125	10.625	10.125	10.625
Time of Rupture (sec)	-	-	-	-	-	-	-	-
Core Wide Oxidation (%)	0.0002	0.0005	0.0009	0.0004	0.0007	0.0013	0.0003	0.0006
Local Maxmium Oxidation (%)	0.0150	0.0474	0.1082	0.0812	0.1145	0.1659	0.0848	0.1184

TABLE 15.3.4-1

TIME SEQUENCE OF EVENTS FOR COMPLETE LOSS OF FLOW EVENT

Accident	Event	Time (sec.)
Complete loss of Forced Reactor Coolant Flow		
All loops operating, all pumps coasting down		
	Coastdown begins	0
	Rod motion begins	1.5
	Minimum DNBR occurs	
	for Mark-BW	3.4
	for Advanced W17 HTP	3.5

TABLE 15.3.7-1

TIME SEQUENCE OF EVENTS FOR THE

STEAM LINE BREAK COINCIDENT WITH

ROD WITHDRAWAL AT POWER ANALYSIS

EVENT (Mark-BW Fuel)	TIME (sec.)
Steam line breaks / Rod withdrawal occurs	0.0
Overpower ΔT reactor trip setpoint reached	9.7
Rods begin to fall	17.7
Peak Core Heat Flux occurs	18.3
Minimum LYNXT DNBR occurs	18.4

EVENT (HTP Fuel))	TIME (sec.)
Steam line breaks / Rod withdrawal occurs	0.0
Overpower ΔT reactor trip setpoint reached	15.250
Rods begin to fall	15.950
Turbine Isolates	16.475
Minimum LYNXT DNBR occurs	16.5

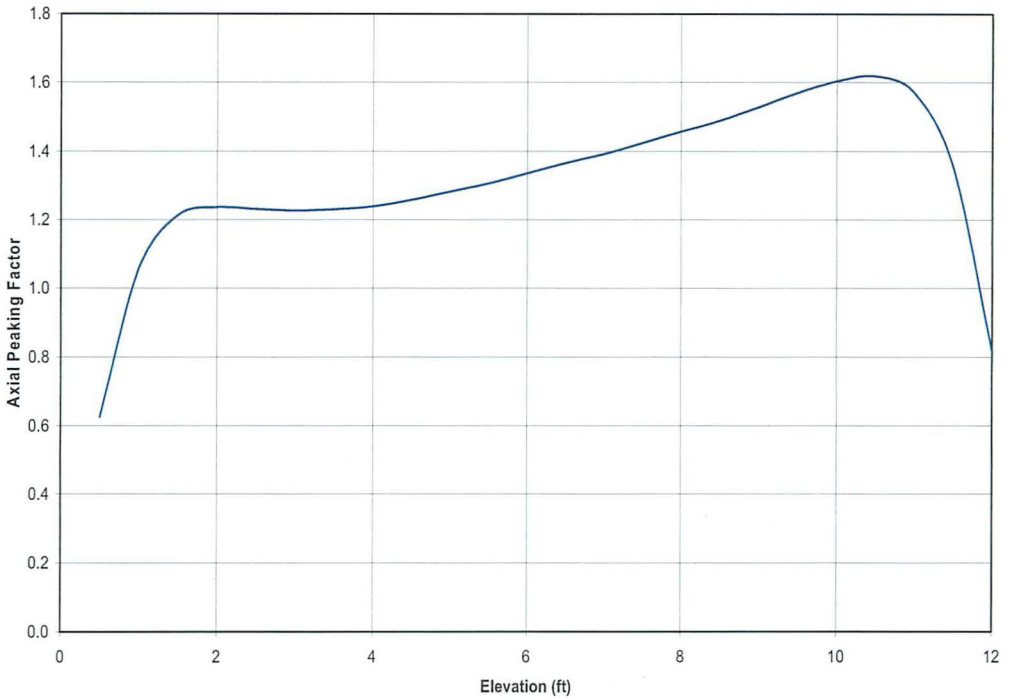

Figure 15.3.1-1 Small Break LOCA Study Axial Peaking Profile

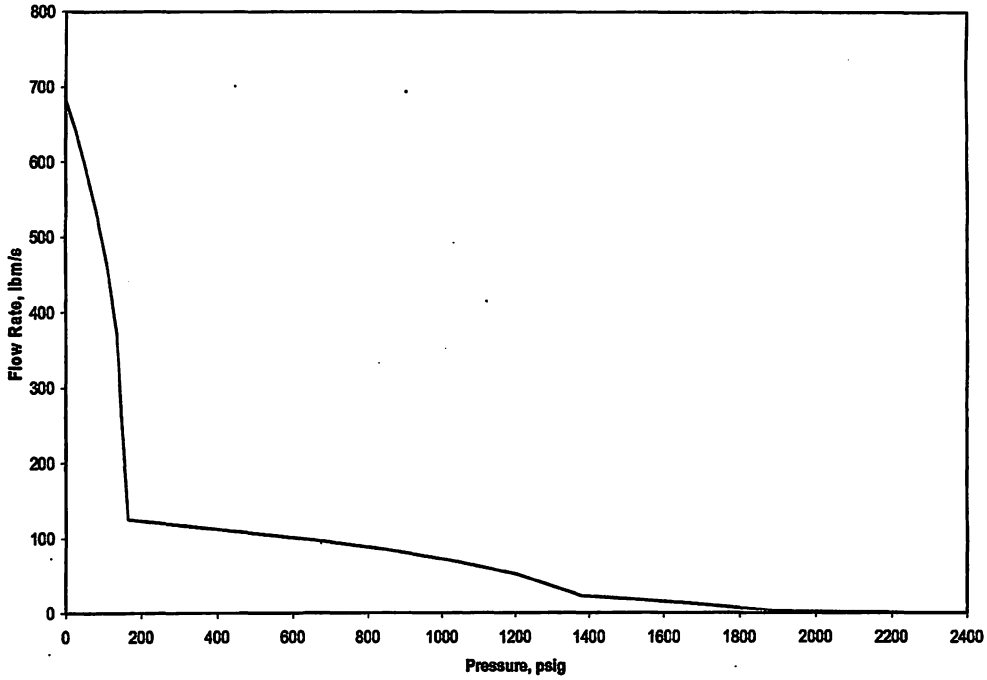

Figure 15.3.1-2
Small Break LOCA Study
Pumped ECCS Injection Flow vs. RCS Pressure

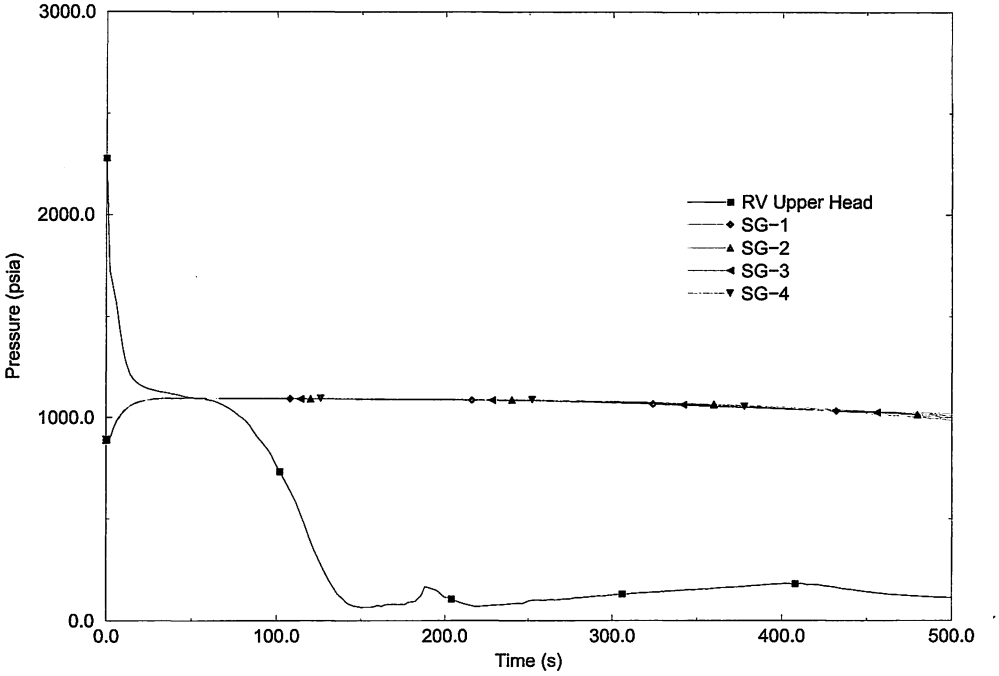

Figure 15.3.1-3
9.76-Inch Pump Discharge Break
Primary System Pressure

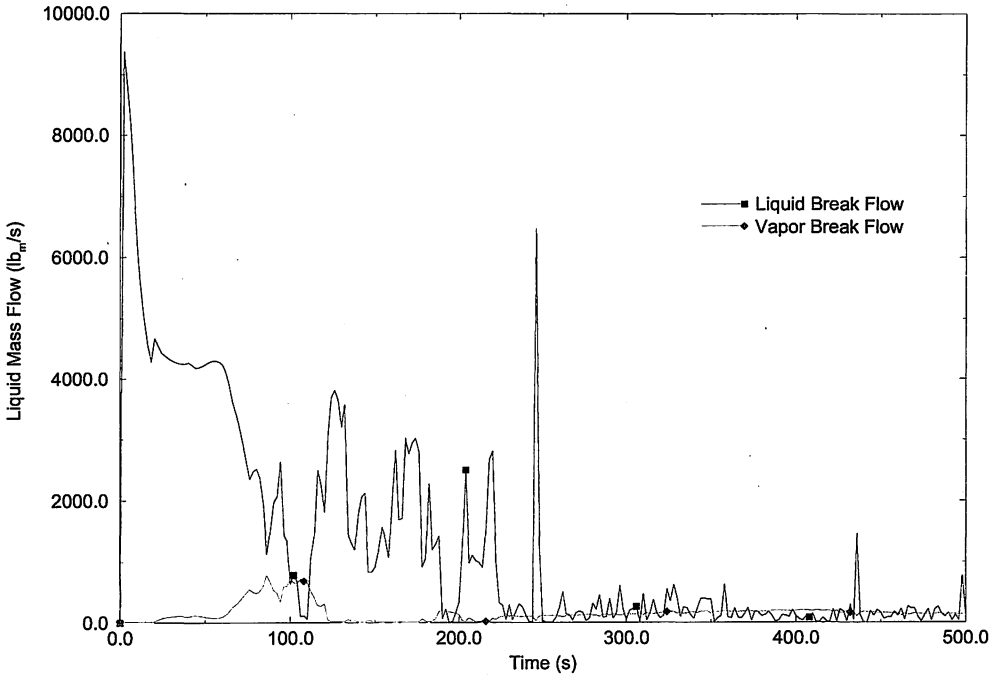

Figure 15.3.1-4
9.76-Inch Pump Discharge Break
Leak Flow Rate

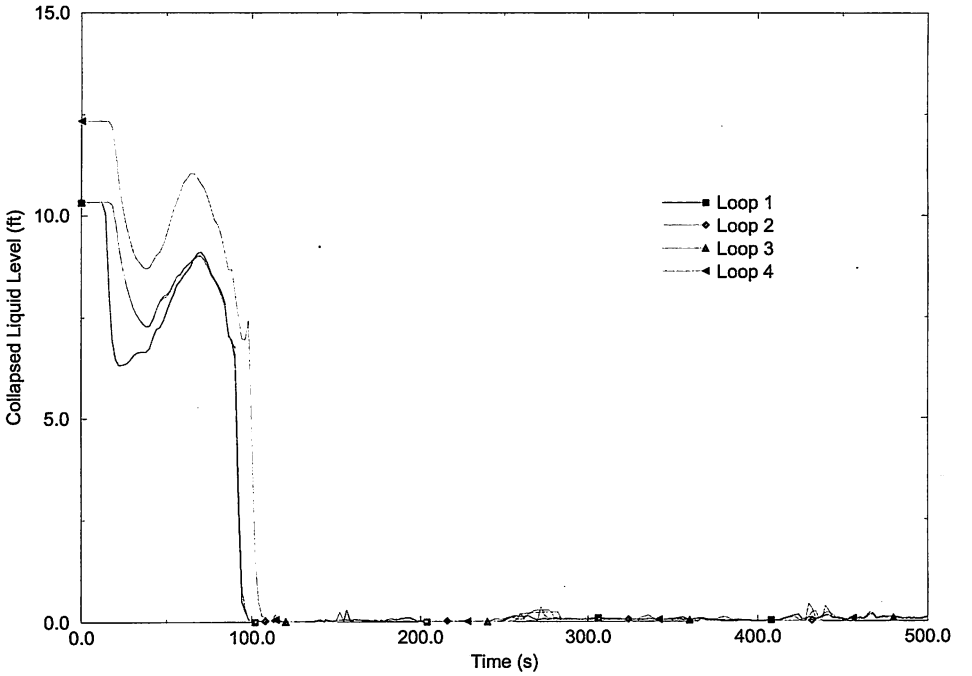

Figure 15.3.1-5
9.76-Inch Pump Discharge Break
Loop Seal Upside Collapsed Liquid Levels

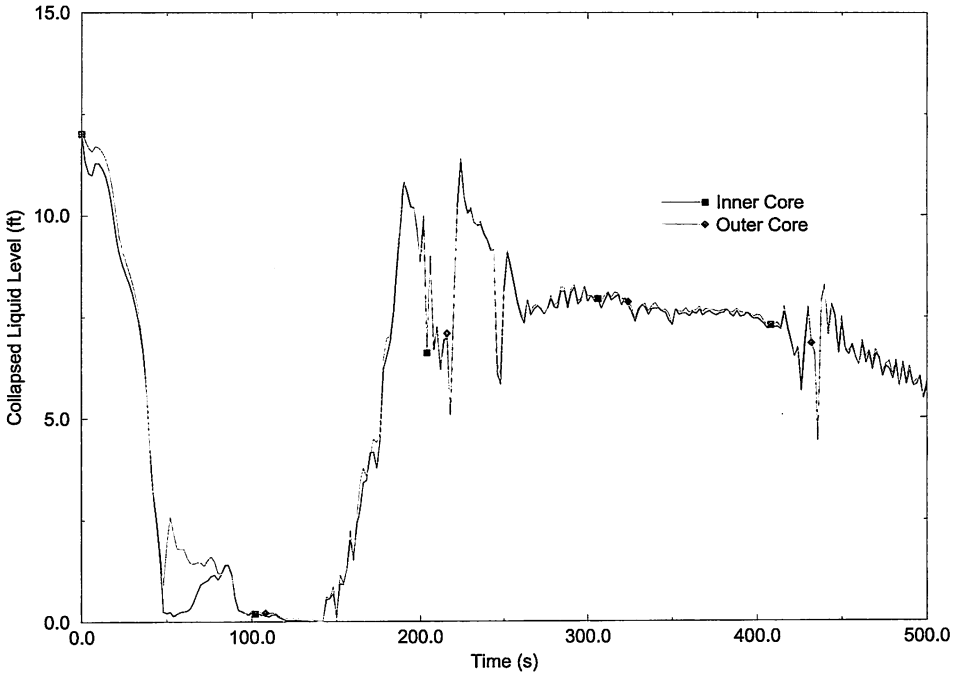

Figure 15.3.1-6
9.76-Inch Pump Discharge Break
Inner and Outer Core Collapsed Liquid Level

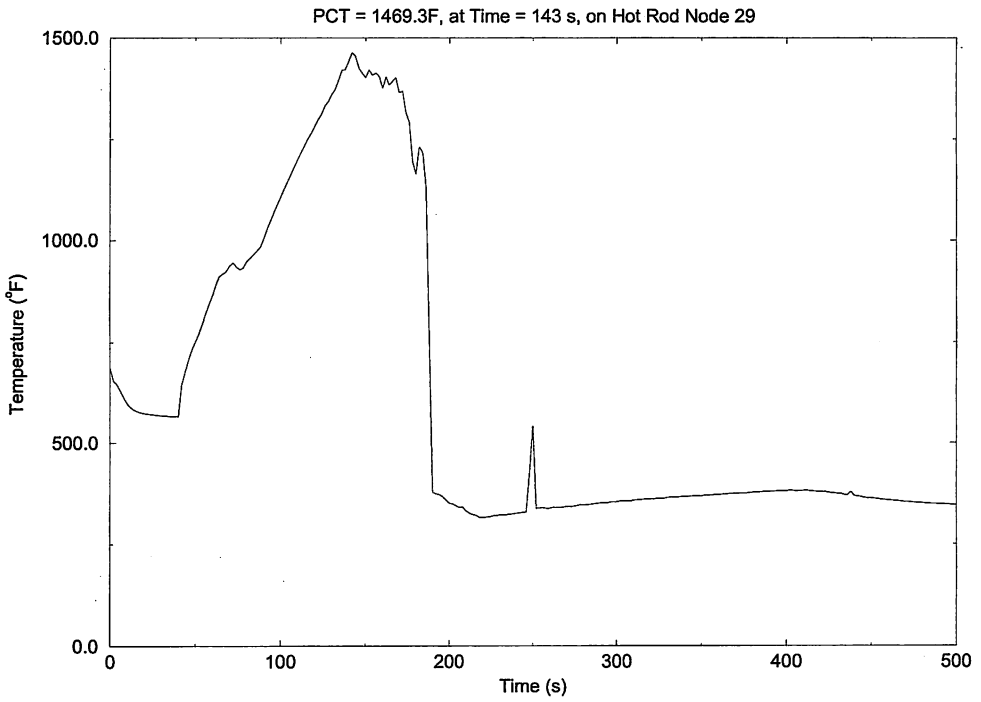

Figure 15.3.1-7
9.76-Inch Pump Discharge Break
Hot Pin Clad Temperature

	R	P	N	M	L	K	J	H	G	F	E	D	C	B	A
1							-8.9			-7.4					
2			-5.6			-9.1		-8.5							
3								-8.2		-6.8		-4.1		0.2	
4		-7.9	-8.2					-7.7							
5					-8.4				-6.0		-3.8		-1.8		
6	-8.5		-8.4			-7.4		-5.5						-0.3	
7				-7.7			-5.0			-1.2			-1.0		
8	-7.7		-7.3		-5.9		-3.2			1.5		3.2	3.4	3.6	
9		-6.9							2.7		5.9				6.0
10					-3.4		0.7					10.6			
11	-5.3				-1.8			5.9			17.1				11.4
12						1.3			12.3			24.6			
13			0.1		0.7			7.7						23.6	
14			2.5				4.7			11.1		17.6			
15					2.1			6.5							

CASE A

Figure 15.3.3-1 Interchange Between Region 1 and Region 3 Assembly

	R	P	N	M	L	K	J	H	G	F	E	D	C	B	A
1					0.3			1.5							
2			3.2				0.8			3.2		6.0			
3			1.2		0.0			1.6				-		10.3	
4						0.0			2.9			6.5			
5	-2.2				-1.0			2.2			6.9				6.6
6					-1.7		0.5					8.8			
7		-3.2							5.2		16.7				5.4
8	-3.5		-3.4		-2.6		-0.7			11.4		11.3	5.8	4.4	
9				-3.6			-2.0			-2.3			2.2		
10	-3.8		-3.8			-3.6		-2.9						0.5	
11					-3.9				-4.3		-4.6		-1.5		
12		-2.8	-3.1					-4.5							
13								-4.8		-4.4		-2.6		1.4	
14			-0.4			-4.8		-4.8							
15							-4.8			-4.5					

CASE B-1

Figure 15.3.3-2 Interchange Between Region 1 and Region 2 Assembly, Burnable Poison Rods Being Retained by the Region 2 Assembly

	R	P	N	M	L	K	J	H	G	F	E	D	C	B	A
1							1.0			1.1					
2			5.1			1.0		1.0							
3								1.1		1.1		1.9		4.9	
4		1.7	1.7					1.4							
5					1.1				1.8		1.1		0.7		
6	0.0		0.2			1.8		3.9						4.0	
7				0.0			5.2			2.2			-0.3		
8	-0.7		-0.6		0.3		5.1			1.5		-0.3	-0.6	-0.7	
9		-1.0							-1.1		-0.8				-0.9
10					-1.4		-3.1					-1.3			
11	-0.9				-1.7						-1.7				-0.9
12						-2.5			-2.9			-1.1			
13			0.7		-1.9			-2.9						2.5	
14			2.3				-2.8			-2.4		-0.8			
15					-2.1			-2.8							

CASE B-2

Figure 15.3.3-3 Interchange Between Region 1 and Region 2 Assembly, Burnable Poison Rods Being Transfered to the Region 1 Assembly

R	P	N	M	L	K	J	H	G	F	E	D	C	B	A	
						-2.2			-2.1						1
		2.0			-2.0		-2.1								2
							-1.5		-1.6		-1.0		2.0		3
	-0.9	-1.0					-0.4								4
				-0.4				1.2		-0.5		-1.4			5
-2.1		-1.6			2.3		5.7						-2.0		6
			-3.2			9.7			4.4			-1.7			7
-2.3		-1.6		1.8		13.6	X		5.6		-0.4	-1.6	-2.1		8
	-2.2							9.7		1.1				-2.2	9
				0.3		4.5					-0.9				10
-1.9				-0.4			1.8			-0.5				-1.9	11
					-0.9			-0.6			-1.1				12
		0.4		-1.4			-1.5						2.0		13
		2.0				-2.1			-2.0		-0.9				14
				-1.9			-2.2								15

CASE C

Figure 15.3.3-4 Enrichment Error: A Region 2 Assembly Loaded into the Core Central Position

R	P	N	M	L	K	J	H	G	F	E	D	C	B	A	
						-11			-14						1
		0.4			-9.2		-12								2
							-12		-14		-15		-13		3
	3.2	1.2					-11								4
				-1.5				-12		-15		-16			5
9.8		7.1			-1.6		-8.0						-16		6
			9.2			-2.3			-12			-14			7
20.0		17.8		10.8		0.8			-10		-14	-15	-16		8
	[illegible].2							-5.5		-11				-15	9
				20.7		5.8					-12				10
42.0		X		23.6			1.9			-8.6				-13	11
					14.0			-1.7			-8.9				12
		38.6		20.4			2.8						-7.0		13
		35.9				7.0			-3.3		-6.3				14
				15.3			2.9								15

CASE D

Figure 15.3.3-5 Loading a Region 2 Assembly into a Region 1 Position Near Core Periphery

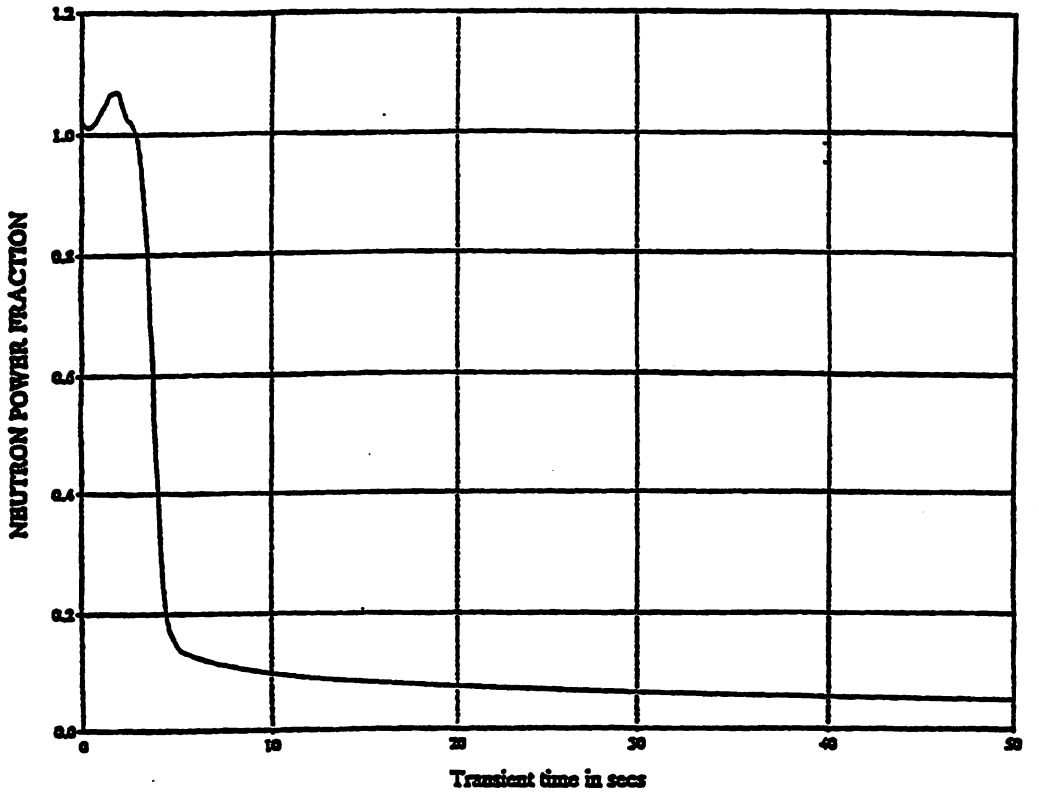

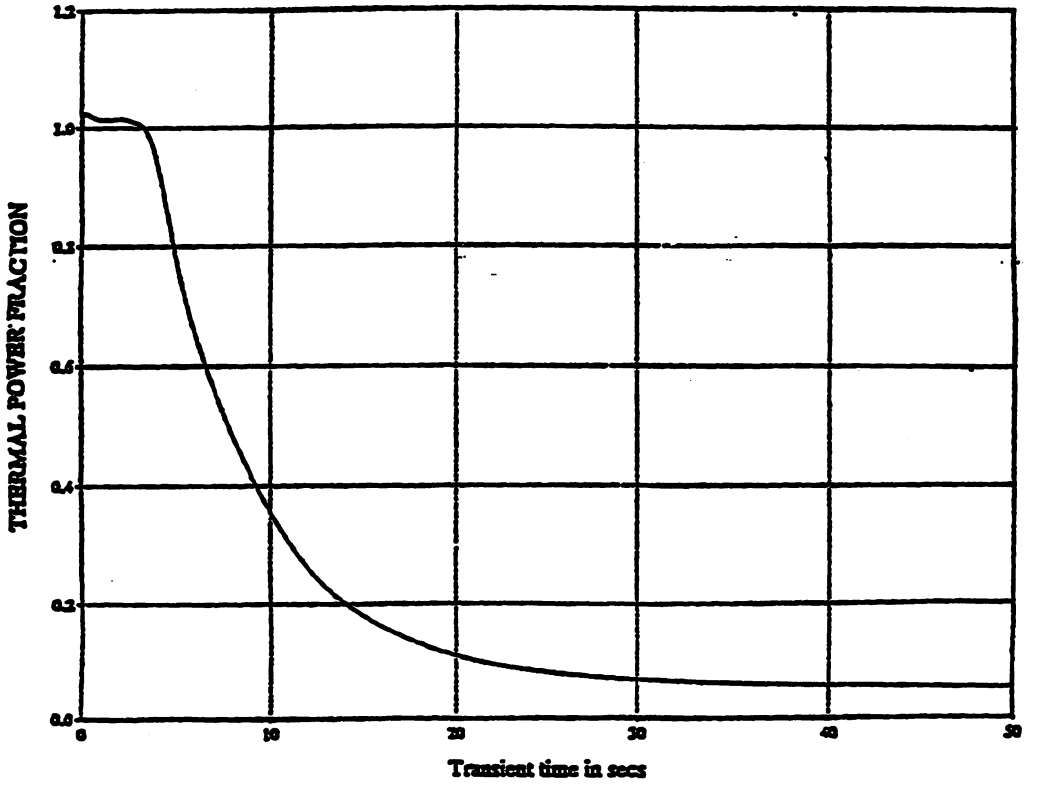

Figure 15.3.4-1 a
Complete Loss of Forced Reactor Coolant Flow
Neutron Power and Thermal Power
vs Time - Mark-BW Fuel

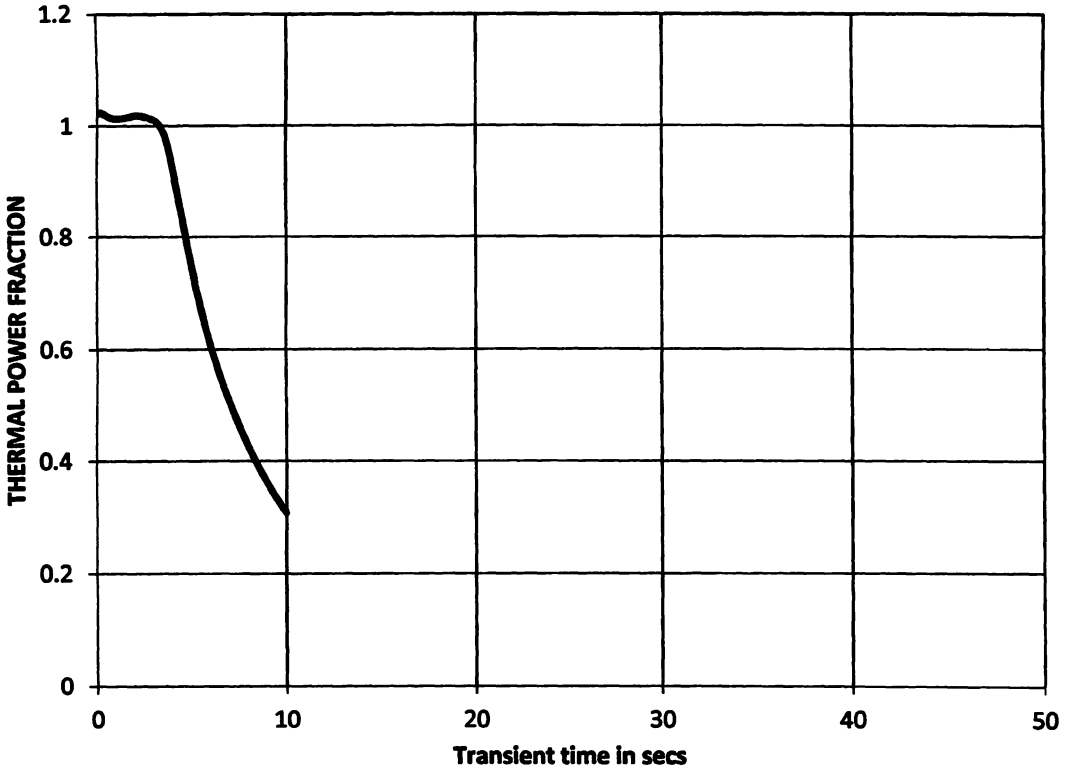

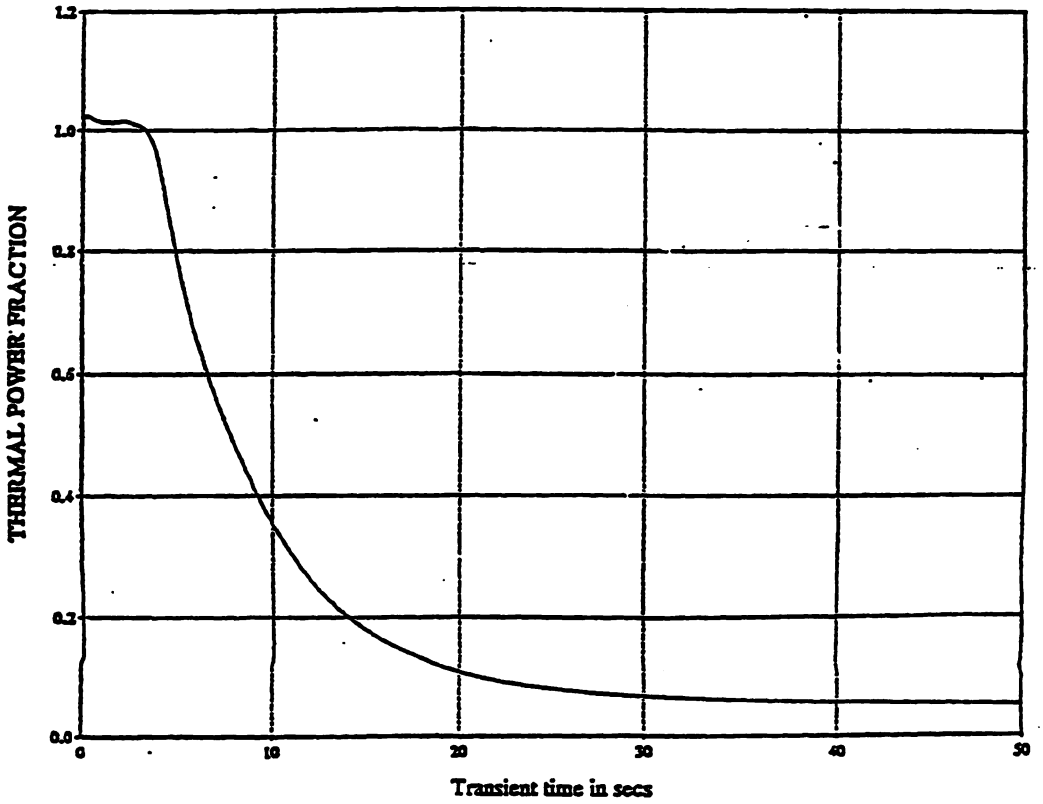

Figure 15.3.4-1b Complete Loss of Forced Reactor Coolant and Thermal Power vs Time - Advanced W17 HTP Fuel

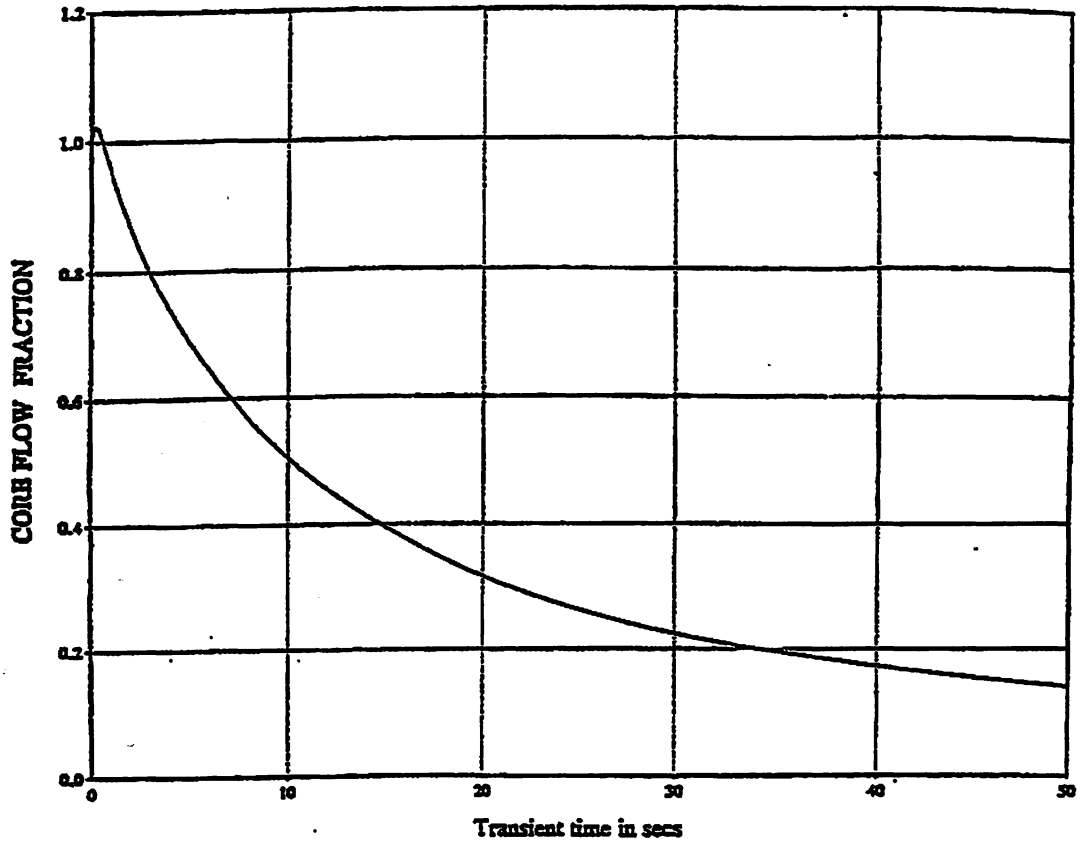

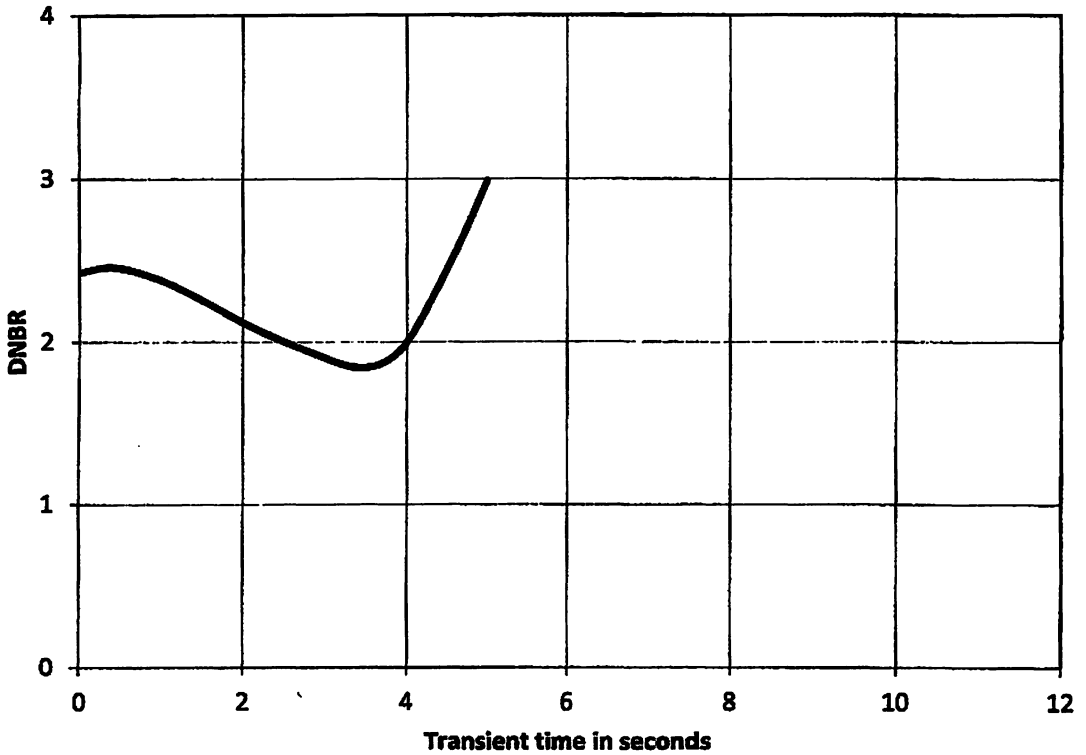

Figure 15.3.4-2a
Complete Loss of Forced Reactor Coolant Flow Core Flow Fraction
And DNBR vs Time - Mark-BW Fuel

Figure 15.3.4-2b

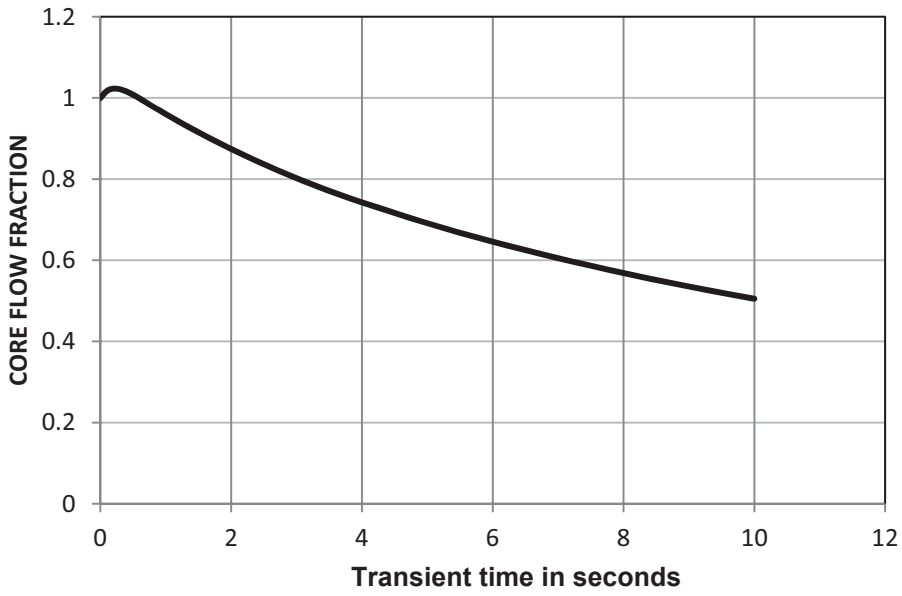

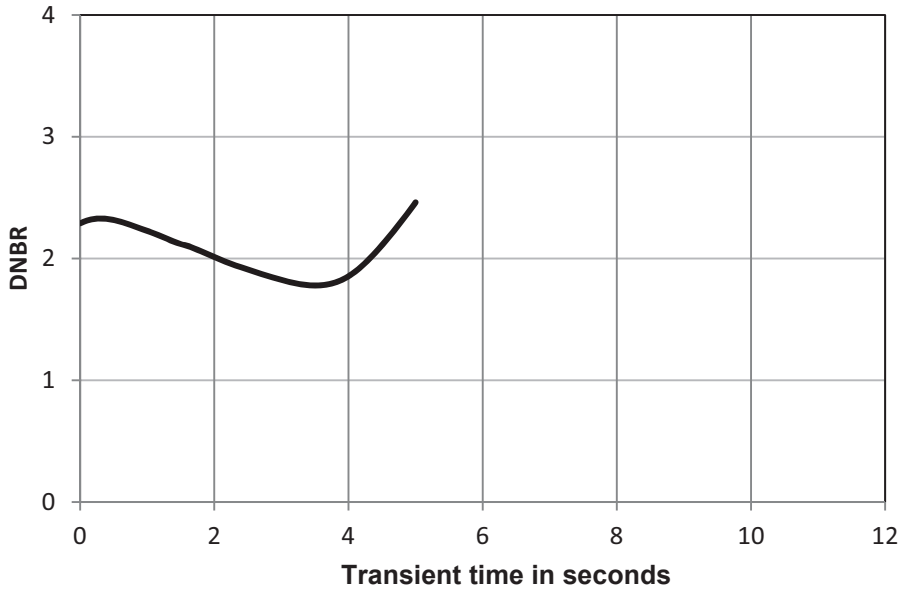

Complete Loss of Forced Reactor Coolant Flow Core Flow Fraction and DNBR vs Time – Advanced W17 HTP Fuel (Transition Cores)

Figure 15.3.4-2c

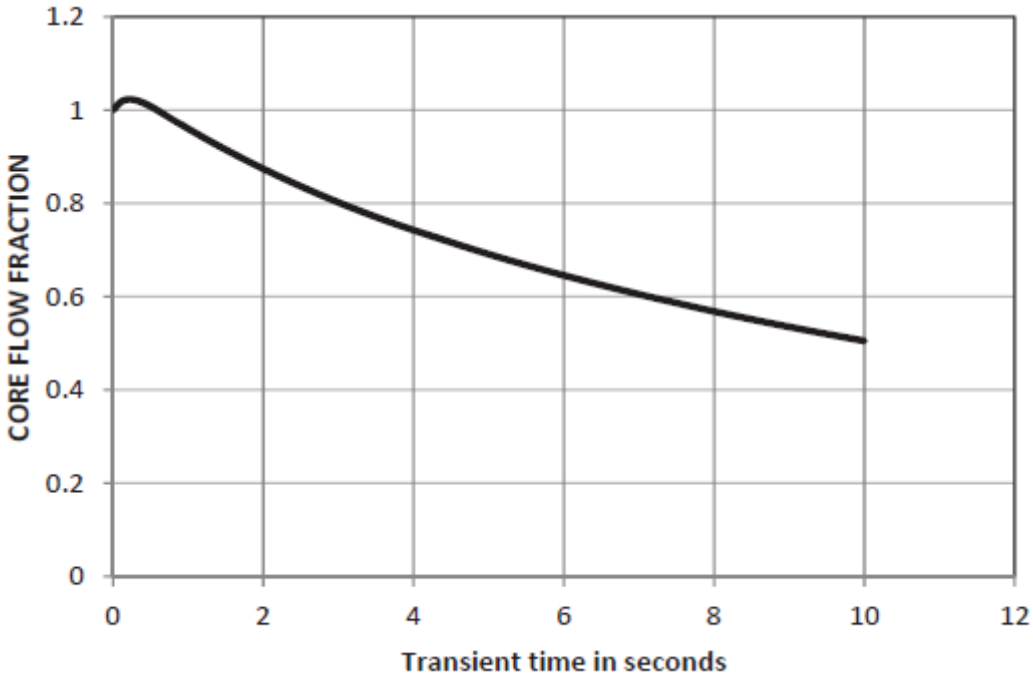

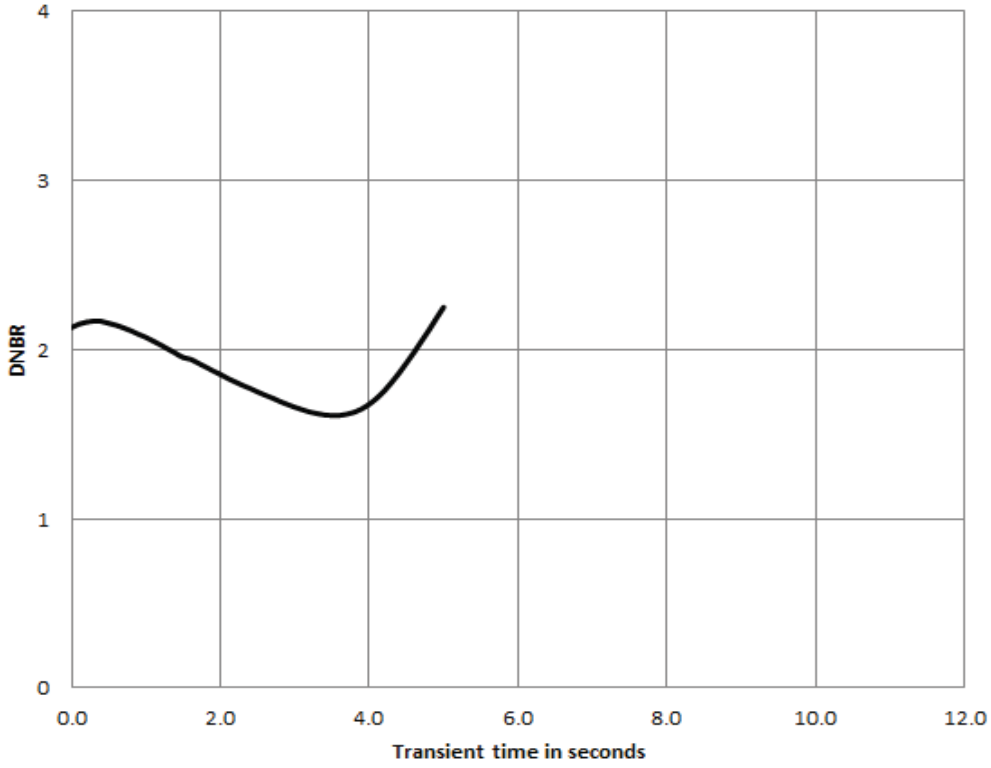

Complete Loss of Forced Reactor Coolant Flow: Core Flow Fraction and DNBR vs Time – Advanced W17 HTP Fuel (Full Core)

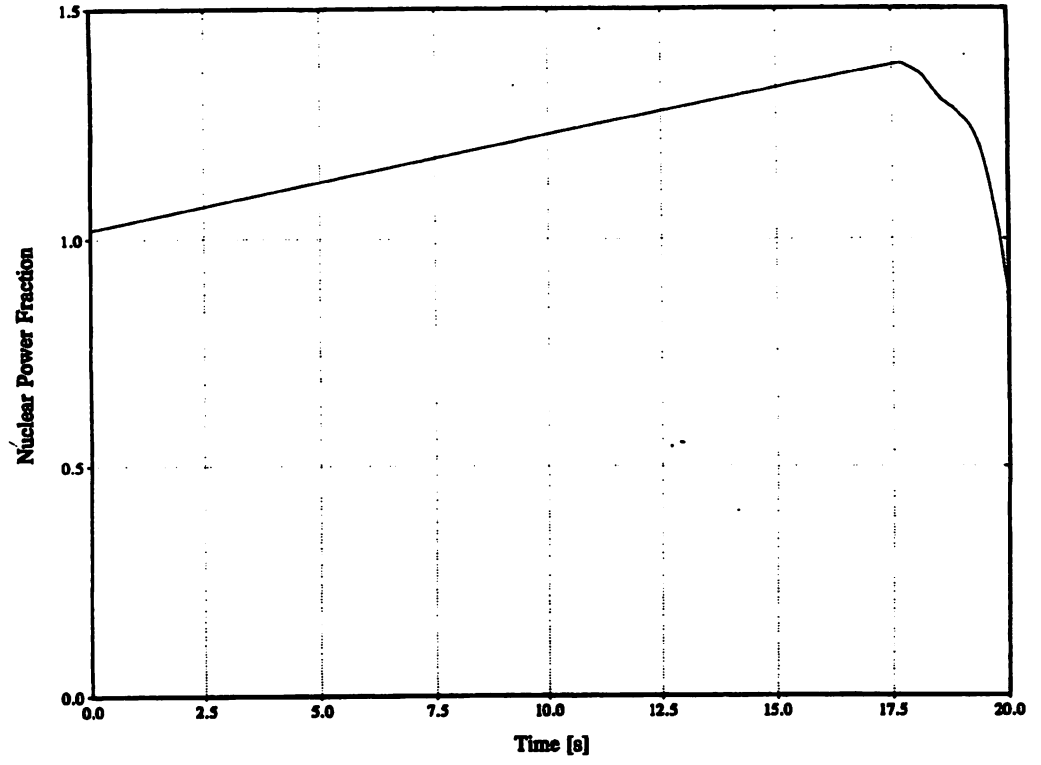

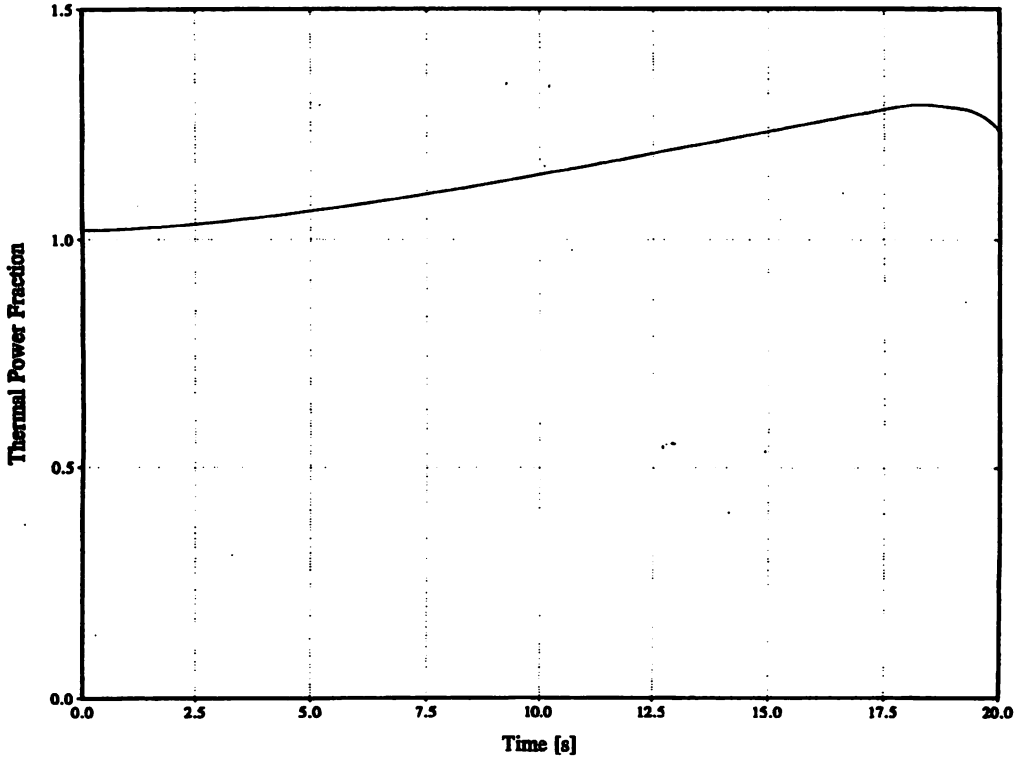

Figure 15.3.7-1a

Sequoyah Steam Line Break Coincident with Rod Withdrawal
Neutron Power, Thermal Power vs Time – Mark-BW Fuel

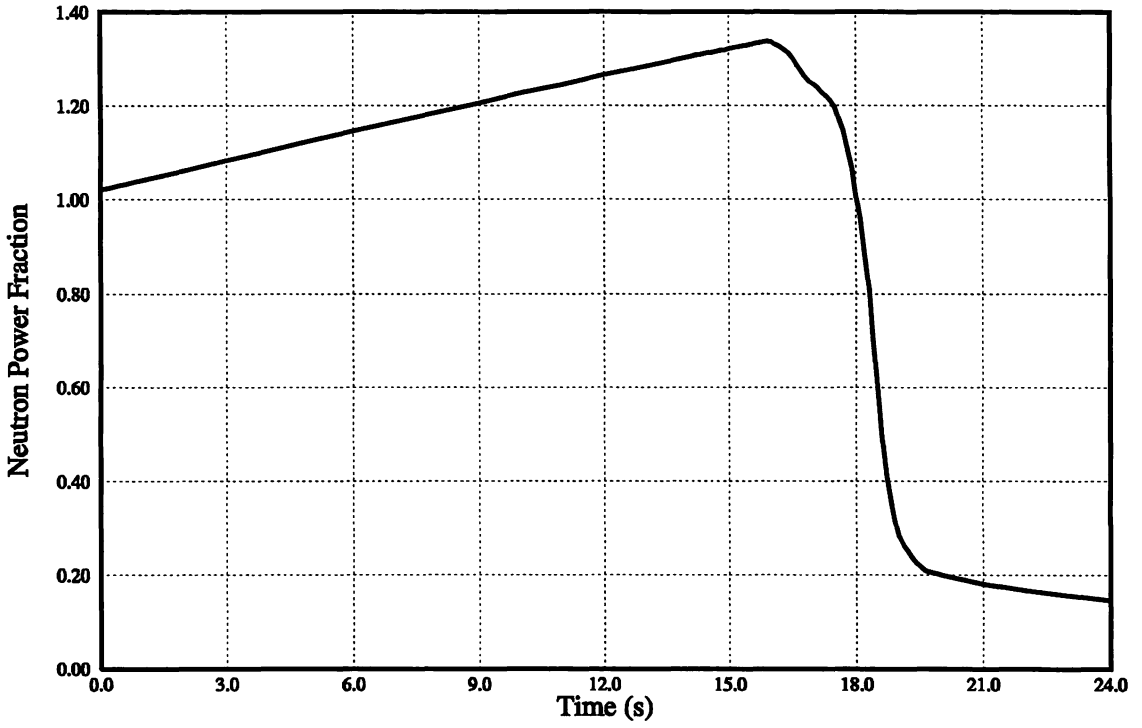

TIRG

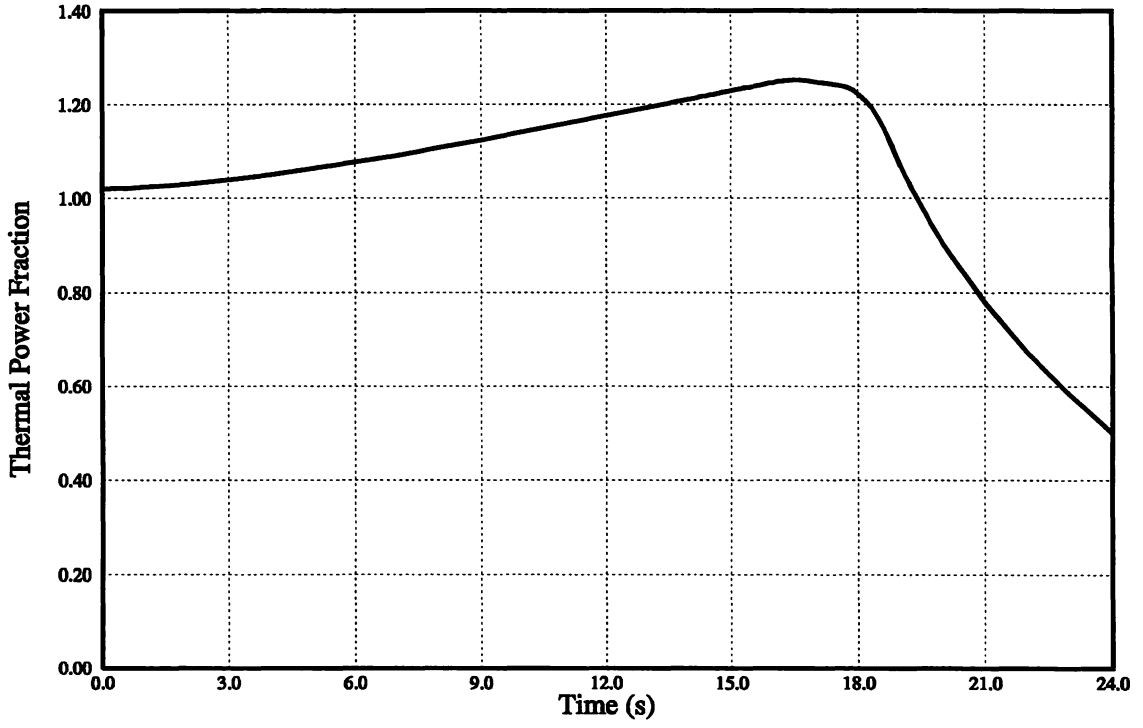

TIRG

Figure 15.3.7-1b
Sequoyah Steam Line Break Coincident with Rod Withdrawal
Neutron Power, Thermal Power vs Time - HTP Fue L

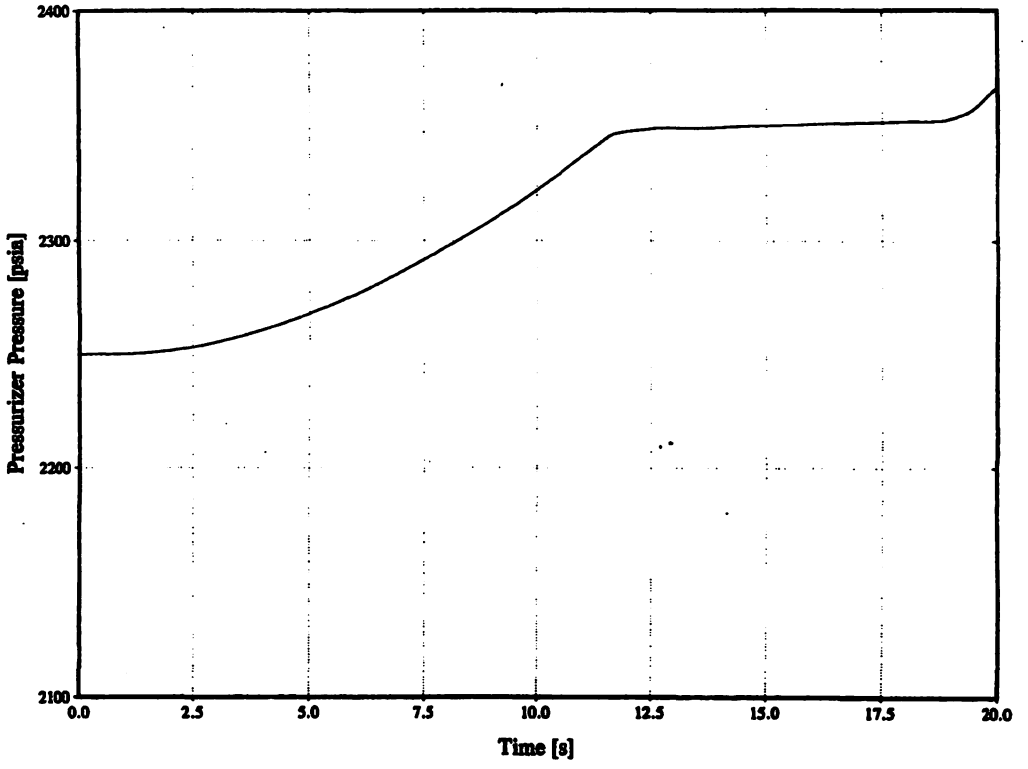

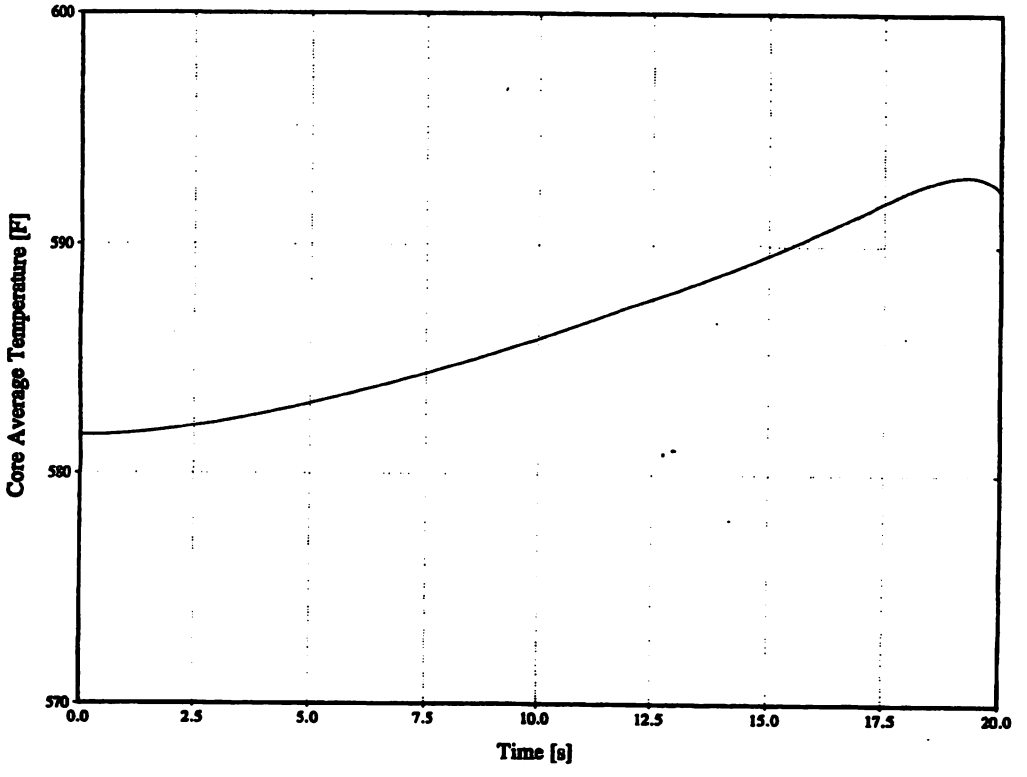

Figure 15.3.7-2a

Sequoyah Steam Line Break Coincident with Rod Withdrawal
Pressurizer Pressure, Core Average Temperature vs Time - Mark-BW Fuel

SQN-24

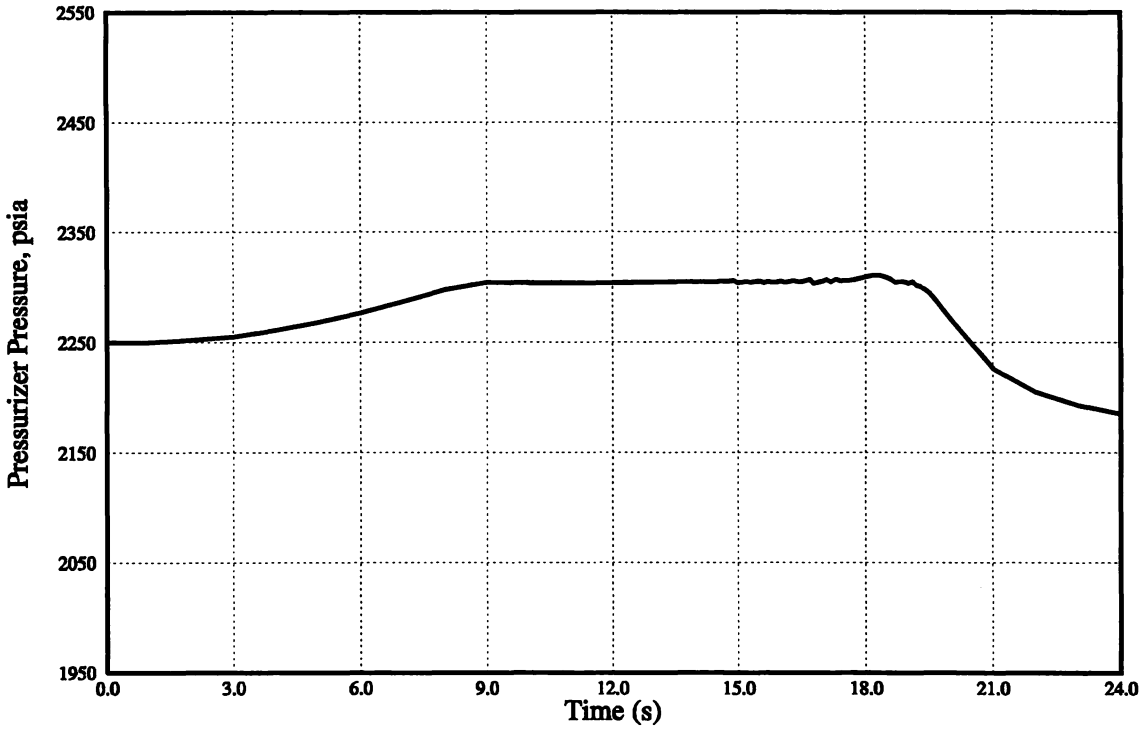

TIRG

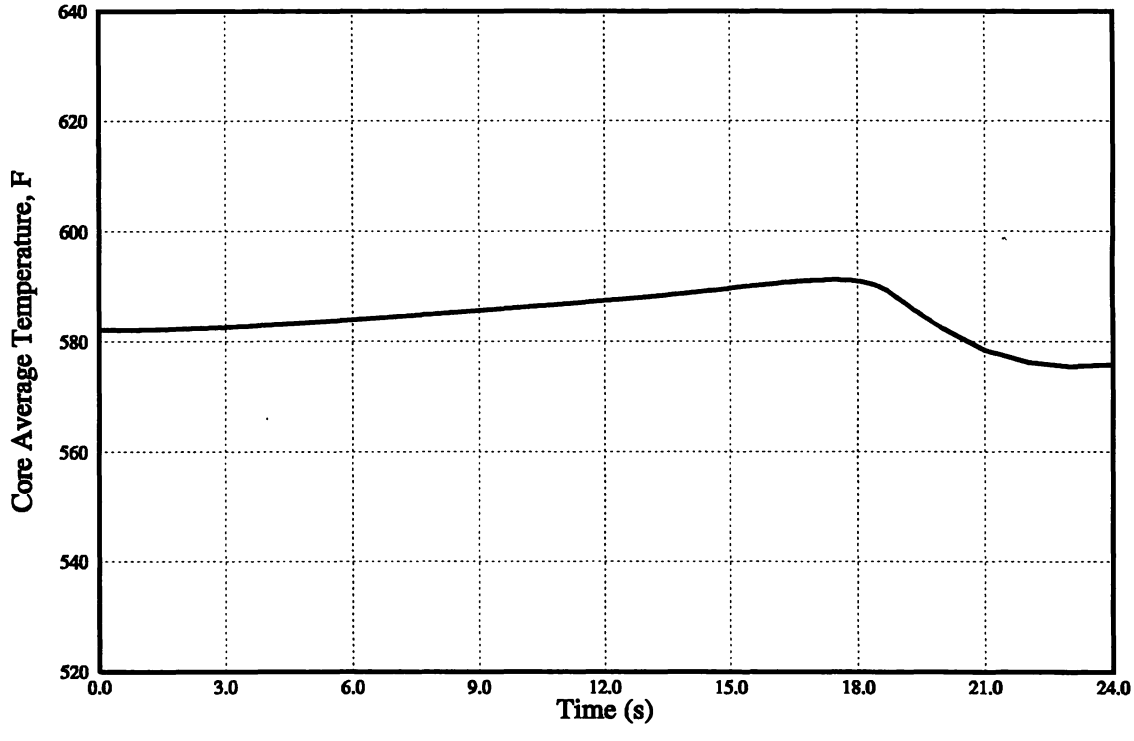

TIRG

Figure 15.3.7-2b
Sequoyah Steam Line Break Coincident with Rod Withdrawal
Pressurizer Pressure, Core Average Temperature vs Time- HTP Fue L

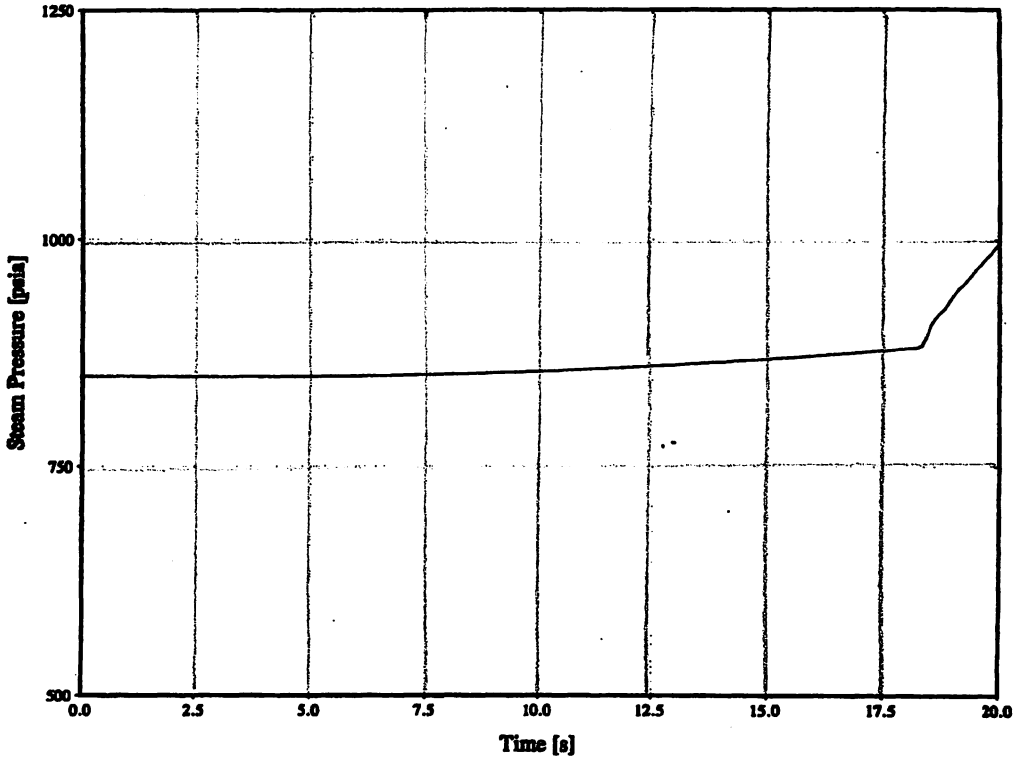

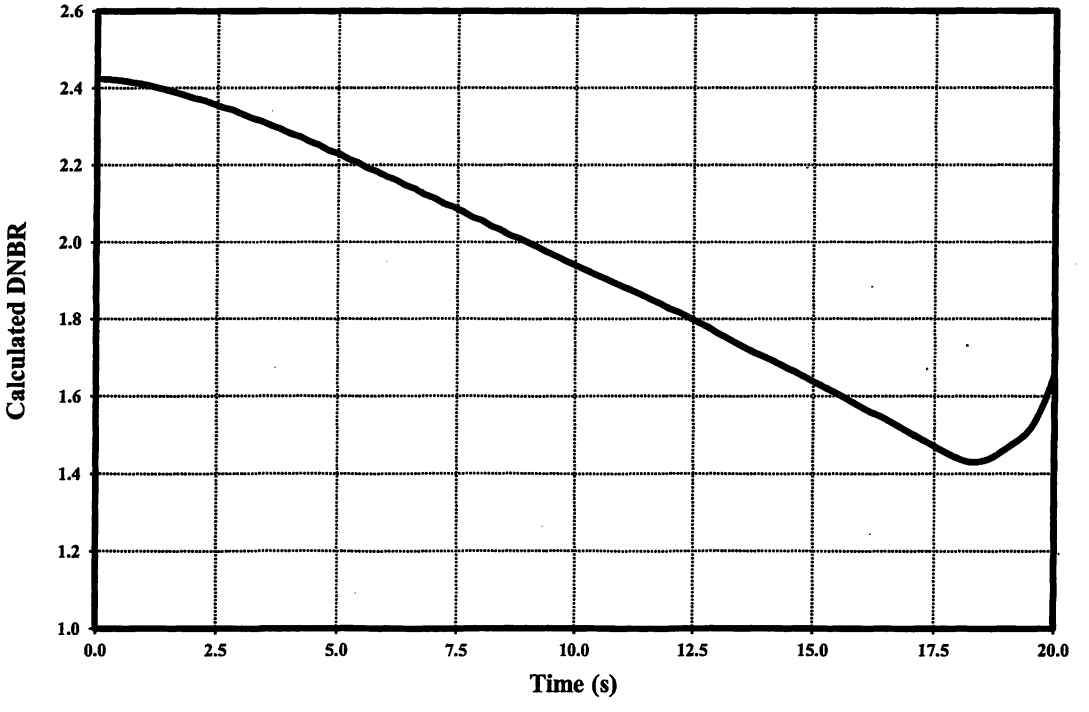

Figure 15.3.7-3 a

Sequoyah Steam Line Break Coincident with Rod Withdrawal
Steam Line Pressure, DNBR vs Time- Mark-BW Fuel

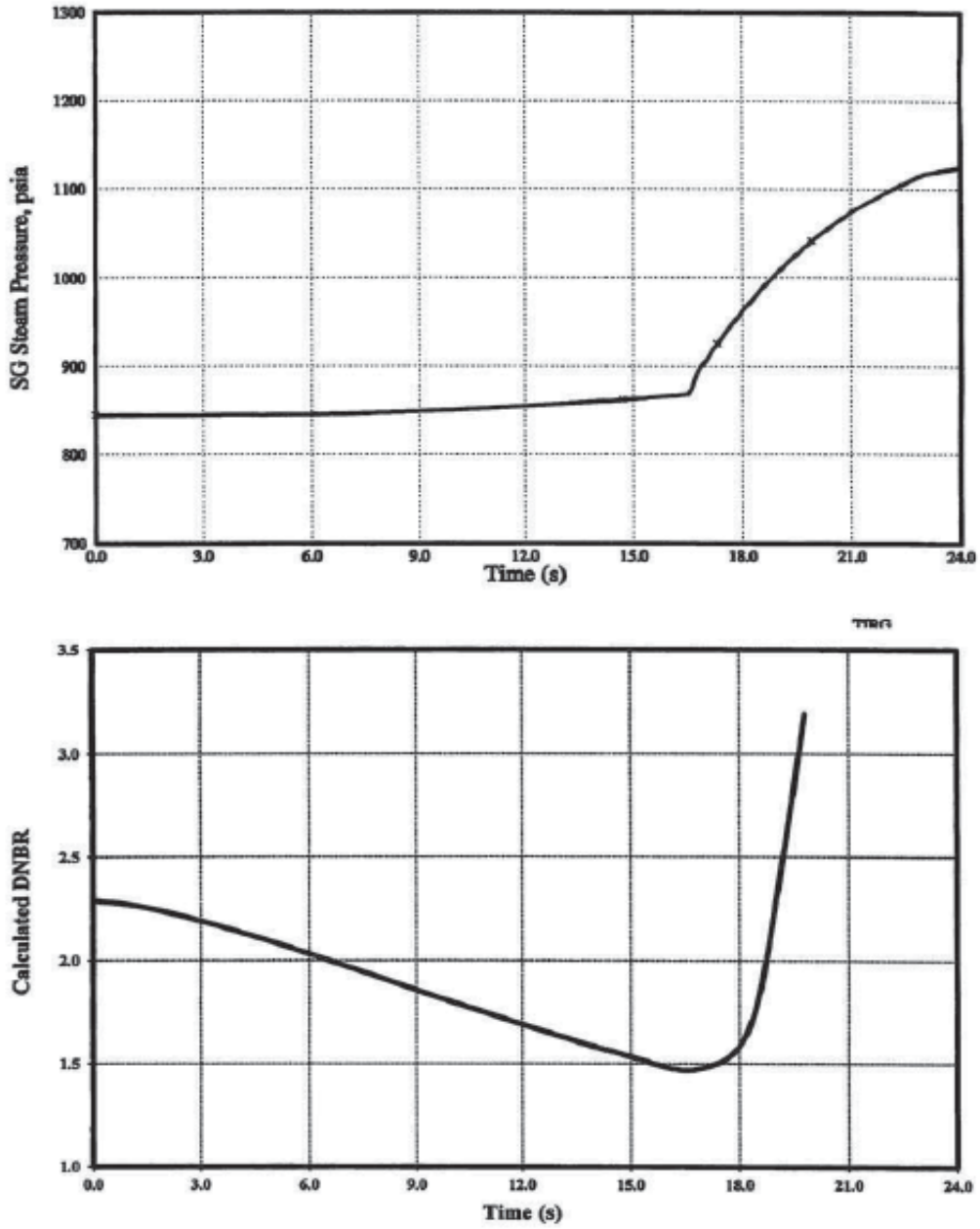

Figure 15.3.7-3b
Sequoyah Steam Line Break Coincident with Rod Withdrawal Steam Generator (SG) Steam Pressure, DNBR vs Time – HTP Fuel (Transition Cores)

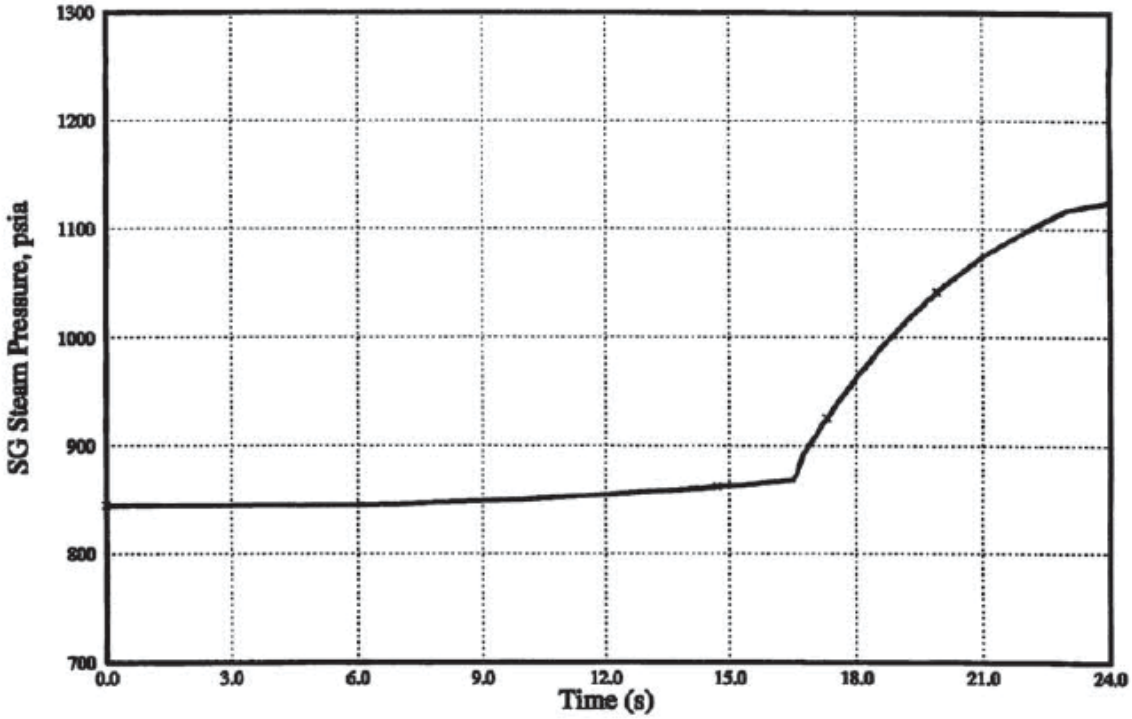

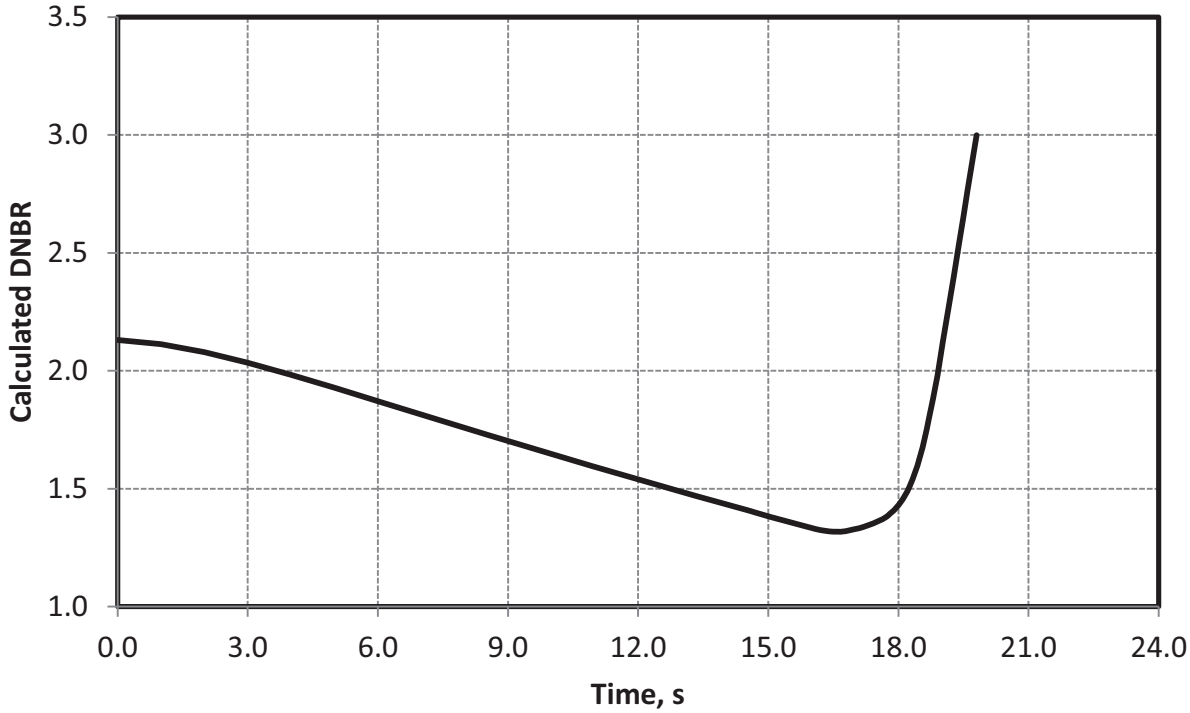

Figure 15.3.7-3c
Sequoyah Steam Line Break Coincident with Rod Withdrawal Steam Generator (SG) Steam Pressure, DNBR vs Time – HTP Fuel (Full Core)

15.4 CONDITION IV - LIMITING FAULTS

Condition IV occurrences are faults which are not expected to take place, but are postulated because their consequences would include the potential for the release of significant amounts of radioactive material. These are the most drastic which must be designed against and thus represent limiting design cases. Condition IV faults are not to cause a fission product release to the environment resulting in an undue risk to public health and safety in excess of guideline values of 10 CFR Part 100. A single Condition IV fault is not to cause a consequential loss of required functions of systems needed to cope with the fault including those of the Emergency Core Cooling System (ECCS) and the containment. For the purposes of this report the following faults have been classified in this category:

1. Major rupture of pipes containing reactor coolant up to and including double ended rupture of the largest pipe in the Reactor Coolant System (loss of coolant accident).

2. Major secondary system pipe ruptures.

3. Steam generator tube rupture.

4. Single reactor coolant pump locked rotor.

5. Fuel handling accident.

6. Rupture of a control rod mechanism housing (rod cluster control assembly ejection).

The analysis of thyroid and whole body doses, resulting from events leading to fission product release, appears later in the Safety Analysis Report. The fission product inventories which form a basis for these calculations are presented in Chapter 11 and Section 15.1. The Safety Analysis Report also includes the discussion of systems interdependency contributing to limiting fission product leakages from the containment following a Condition IV occurrence.

15.4.1 Major Reactor Coolant System Pipe Ruptures (Loss of Coolant Accident)

The analysis specified by 10CFR50.46 "Acceptance Criteria for Emergency Core Cooling Systems for Light Water Nuclear Power Reactors", is presented in this section. The results of the loss of coolant accident analysis are shown in Table 15.4.1-3 and show compliance with the acceptance criteria.

A Large Break LOCA is initiated by a postulated rupture of the Reactor Coolant System (RCS) primary piping. Based on deterministic studies, the worst break location is in the cold leg piping between the reactor coolant pump and the reactor vessel for the RCS loop containing the pressurizer. The break initiates a rapid depressurization of the RCS. A reactor trip signal is initiated when the low pressurizer pressure trip setpoint is reached; however, reactor trip is conservatively neglected in the analysis. The reactor is shut down by coolant voiding in the core.

The plant is assumed to be operating normally at full power prior to the accident. The cold leg break is assumed to open instantaneously. For this break, a rapid depressurization occurs, along with a

core flow stagnation and reversal. This causes the fuel rods to experience departure from nucleate boiling (DNB). Subsequently, the limiting fuel rods are cooled by film convection to steam. The coolant voiding creates a strong negative reactivity effect and core fission ends. As heat transfer from the rods is reduced, the cladding temperature rises.

Coolant in all regions of the RCS begins to flash. At the break plane, the loss of subcooling in the coolant results in substantially reduced break flow. This reduces the depressurization rate, and leads to a period of positive core flow or reduced downflow as the reactor coolant pumps in the intact loops continue to supply water to the vessel. Cladding temperatures may be reduced and some portions of the core may rewet during this period. The positive core flow or reduced downflow period ends as two-phase conditions occur in the reactor coolant pumps, reducing their effectiveness. Once again, the core flow reverses as most of the vessel mass flows out through the broken cold leg.

Mitigation of the Large Break LOCA begins when the Safety Injection System signal is actuated. This signal is initiated by either high containment pressure or low pressurizer pressure. Regulations require that a worst single-failure be considered. This single-failure has been determined to be the loss of one diesel (one ECCS pumped injection train) with fully functional containment sprays. The Realistic Large Break LOCA methodology conservatively assumes an on-time start and normal lineups of the containment spray to conservatively reduce containment pressure and increase break flow. Hence, the analysis assumes that one charging pump, one Safety Injection pump, one RHR pump and two containment spray pumps are operating.

When the RCS pressure falls below the accumulator pressure, fluid from the accumulators is injected into the cold legs. In the early delivery of accumulator water, high pressure and high break flow will drive some of this fluid to bypass the core. During this bypass period, core heat transfer remains poor and fuel rod cladding temperatures increase. As RCS and containment pressures equilibrate, ECCS water begins to fill the lower plenum and eventually the lower portions of the core; thus, core heat transfer improves and cladding temperatures decrease. Eventually, the relatively large volume of accumulator water is exhausted and core recovery must rely on pumped ECCS coolant delivery alone. As the accumulators empty, the nitrogen gas used to pressurize the accumulators exits through the break. This gas release may result in a short period of improved core heat transfer as the nitrogen gas displaces water in the downcomer. After the nitrogen gas has been expelled, the ECCS temporarily may not be able to sustain full core cooling because of the core decay heat and the higher steam temperatures created by quenching in the lower portions of the core. Peak fuel rod cladding temperatures may increase for a short period until more energy is removed from the core by the charging, Safety Injection and RHR while the decay heat continues to fall. Steam generated from fuel rod rewet will entrain liquid and pass through the core, vessel upper plenum, the hot legs, the steam generator, and the reactor coolant pump before it is vented out the break. Some steam may flow to the upper head and pass through the spray nozzles which would provide a vent path to the break. The resistance of this flow path to the steam flow is balanced by the driving force of water filling the downcomer. This resistance may act to retard the progression of the core reflood and postpone core wide cooling. Eventually (within a few minutes of the accident), the core reflood will progress sufficiently to ensure core wide cooling. Full core quench occurs within a few minutes after core wide cooling. Long-term cooling is then sustained with the RHR system.

15.4.1.1 Performance Criteria for Emergency Core Cooling System

The reactor is designed to withstand thermal effects caused by a loss of coolant accident including the double ended severance of the largest Reactor Coolant System Pipe. The reactor core and internals, together with the ECCS are designed so that the reactor can be shutdown safely and the essential heat transfer geometry of the core can be preserved following the accident.
The ECCS even when operating during the injection mode with the most severe single active failure, is designed to meet the Acceptance Criteria, Reference 1.

15.4.1.2 Method of Thermal Analysis

The RLBLOCA methodology is documented in Reference 67. The methodology follows the Code Scaling, Applicability, and Uncertainty (CSAU) evaluation methodology (Reference 68). This method outlines an approach for defining and qualifying a best-estimate thermal-hydraulic code and quantifies the uncertainties in a LOCA analysis.

The RLBLOCA methodology consists of the following computer codes:

- RODEX3A for computation of the initial fuel stored energy, fission gas release, and fuel-cladding gap conductance.
- S-RELAP5 for the system thermal-hydraulic calculation.

The governing two-fluid (plus noncondensibles) model with conservation equations for mass, energy, and momentum transfer is used. The reactor core is modeled in S-RELAP5 with heat generation rates determined from reactor kinetics equations (point kinetics) with reactivity feedback, and with actinide and decay heating. The two-fluid formulation uses a separate set of conservation equations and constitutive relations for each phase. The effects of one phase on another are accounted for by interfacial friction, and heat and mass transfer interaction terms in the equations. The conservation equations have the same form for each phase; only the constitutive relations and physical properties differ.

The modeling of plant components accounts for physical dimensions and the dominant phenomenon expected during the LBLOCA event. The basic building blocks for modeling are the hydraulic volume for fluid paths and the heat structure for a heat transfer surface. In addition, special purpose components exist to represent specific components such as the pumps or the steam generator separators. All geometries are modeled at the resolution necessary to best resolve the flow field and the phenomena being modeled within practical computational limitations. The S-RELAP5 model explicitly describes the RCS, reactor vessel, pressurizer, and accumulator lines. The charging injection flows are connected to the RCS and the SI and RHR injection flows are connected to the accumulator lines, consistent with the plant layout. This model also describes the secondary-side steam generator that is instantaneously isolated (closed Main Steam Isolation Valves and feedwater trip) at the time of the break. A symmetric steam generator tube plugging level of 15% per steam generator was assumed. The break is modeled in the same loop as the pressurizer, as directed by the RLBLOCA methodology. The RLBLOCA transients are of sufficiently short duration that the switchover to sump cooling water (i.e. Recirculation) for CCS pumped injection need not be considered.

As described in the AREVA RLBLOCA methodology, many parameters associated with LBLOCA phenomenological uncertainties and plant operation ranges are sampled. The LBLOCA

phenomenological uncertainties are provided in Reference 67. Values for process or operational parameters, including ranges of sampled process parameters, and fuel design parameters used in the analysis are given in Table 15.4.1-1. Plant data are analyzed to develop uncertainties for the process parameters sampled in the analysis. Two parameters, Refueling Water Storage Tank (RWST) temperature for pumped ECCS flows and diesel start time, are set at conservative bounding values for all calculations. Where applicable, the sampled parameter ranges are based on technical specification limits or supporting plant calculations that provide more bounding values.

Following the establishment of an acceptable steady-state condition, the transient calculation is initiated by introducing a break into one of the loops (specifically, the loop with the pressurizer). The evolution of the transient through blowdown, refill and reflood is computed continuously using S-RELAP5. Containment pressure is also calculated by S-RELAP5 using containment models derived from ICECON (Reference 69) which is based on the CONTEMPT-LT code (Reference 70) and has been updated for modeling ice condenser containments.

The final step of the best-estimate methodology is to combine all the uncertainties related to the code and plant parameters and estimate the Peak Cladding Temperature (PCT) at a high probability level.

15.4.1.3 Containment Analysis

The concurrent containment transient pressure calculation is performed by the ICECON module within the S-RELAP5 code. For the Realistic Large Break LOCA analysis, dominant containment parameters, as well as NSSS parameters, were established via a Phenomena Identification and Ranking Table (PIRT) process. Other model inputs are generally taken as nominal or conservatively biased. The PIRT outcome yielded two important (relative to Peak Cladding Temperature) containment parameters-containment pressure and temperature. In many instances, the conservative guidance of Containment Systems Branch Technical Position 6-1 (Reference 71) was used in setting the remainder of the containment model input parameters. As indicated in Table 15.4.1-1, containment temperature is a sampled parameter. Containment pressure response is indirectly ranged by sampling the upper containment volume. The minimum value is carried over from use in the long-term containment integrity analysis of record for Sequoyah. The maximum value is a simplified value computed as the volume available within the upper dome of the containment and within the crane wall above the control rod drive missile shield with no accounting for internal structures and the volumes of the refueling canal and the annular region separating the ice compartments neglected. This volume is maximized by neglecting the volume of internal structures. The lower compartment volume is biased low in order to promote flow through the ice baskets. In accordance with Reference 67, the condensing heat transfer coefficient is intended to be closer to a best-estimate instead of a bounding high value. In the ice compartment, the water formed by melted ice and condensed steam flows to the lower ice compartment sump where it accumulates, if the ice bay drains are not large enough to accommodate the rate of water production. When the water level in the lower ice compartment sump rises above the bottom of the lower doors, water spillage through the lower doors occurs in addition to flow through the drain ports. The water drainage (spillage plus drainage) from the ice compartment falls through the lower compartment vapor. This condenses steam and reduces the containment pressure. The ice compartment drainage flow is treated as a 100 percent efficient spray during the post-blowdown period of the transient.

The initial conditions and boundary conditions are given in Table 15.4.1-4. The building spray is modeled at maximum heat removal capacity. While there is an option within the computer code model to deliver spray to the lower compartment, this option is not applicable to Sequoyah. All spray

flow is delivered to the upper compartment. Because the start time for the recirculation fan is 600 seconds, forced flow from the upper compartment to the lower compartment is not likely to occur during the time period analyzed. The flow of steam or air, from the lower compartment to the upper compartment, backwards through the back draft dampers, is not modeled (no reverse direction flow). This approach is conservative in that no bypass of the ice beds (from lower to upper compartments) is allowed, and all flow from the lower compartment is directed through the ice beds. The passive flow of air and steam, from the upper compartment to the lower compartment, is modeled however. This is a passive flow, which is only a function of the excess pressure of the upper compartment compared to the lower compartment, the flow area of the recirculation fan back draft dampers, and the loss coefficient of the dampers. The back draft dampers are designed such that reverse flow from the lower to the upper compartment is prevented. However, when the upper compartment pressure is at least 0.5 psi greater than the lower compartment, the dampers open and allow flow from the upper compartment to the lower compartment. Flow in this manner, from the upper to lower compartment, is modeled without this minimum pressure difference, i.e. any excess pressure is modeled as resulting in flow.

Passive heat sink parameters are listed in Table 15.4.1-5. Surface coatings, where they existed, were incorporated as an equivalent thickness of base material in order to eliminate any insulating effects on the exposed surfaces of the heat structures. Because the original basis for the size of each heat sink was biased low (for a different application), the values listed in Table15.4.1-5 reflect a 10 percent increase in heat transfer surface area as compensation. Passive heat sinks were added to the lower containment to represent the advanced design containment sump strainers recently installed over the sump intake (17 ft^3 of steel). Additionally, all heat structure exposed surfaces remain available for condensing steam, even when they may become covered by ice melt or condensate.

The mass and energy release rates used for the containment backpressure calculation as a function of time during blowdown are given in Figures 15.4.1-15 and 15.4.1.-21 for the limiting case.

15.4.1.4 Results of Large Break Spectrum

Two case sets of 93 transient calculations were performed, one with Loss of Offsite Power and another with offsite power continuing to be available. For each transient calculation, Peak Cladding Temperature (PCT) was calculated for a $U0_2$ rod and for Gadolinia bearing rods with concentrations of 2, 4, 6 and 8 w/o Gd_20_3. The limiting case set, that contained the PCT, was the set with offsite power available. The limiting PCT (1941°F) occurred in Case 86 for a $U0_2$ rod. As the results of random sampling within defined limits, a few of the characteristics defining the limiting case include a fuel assembly burnup of 11.6 GWd/MTU, a top skewed axial power shape, and a split break configuration with an area of 3.867 ft^2 per side (relative to an intact cold leg cross sectional flow area of 4.125 ft^2).

The time sequence of accident milestones for the limiting transient is characterized in Table 15.4.1- 2. Table 15.4.1-3 lists the results of the limiting case. The fraction of total hydrogen generated was not directly calculated; however, it is conservatively bounded by the calculated total percent oxidation, which is well below the 1 percent limit. A nominal best estimate PCT case was identified as Case 72, which corresponded to the median case out of the 93-case set with offsite power available. The nominal PCT was 1484°F. This result can be used to quantify the relative conservatism in the limiting case result. In this analysis, it was 457 °F.

Key parameters for the limiting PCT case are shown in Figures 15.4.1-1 through 15.4.1-11. Figure 15.4.1-14 is the plot of PCT independent of elevation; and this figure clearly indicates that the transient exhibits a sustained and stable quench.

15.4.1.5 Effect of Containment Purging

To assess the impact of purging on the calculated post-LOCA Sequoyah containment pressure, a calculation was first performed to obtain the amount of mass which exits through three available sets of purge lines during the initial portion of a postulated LOCA transient. Purge-line isolation closure time is assumed at 4.0 seconds after receipt of signal; during this interval, the full flow area is presumed to be available. In addition, the time to reach the SI signal setpoint and the delay necessary to generate the SI signal are conservatively assessed as 1.5 seconds total. Thus, flow through three pairs of fully open available purge lines was evaluated from 0.0 to 5.5 seconds for the postulated double-ended cold leg break.

The calculation employed the 50-node TMD computer code model which is described in Section 6.2.1.3.4. The 24-inch purge supply lines are connected to Volumes 34, 37, and 25; purge exhaust lines are connected to 36 and 25. Possible combinations of supply lines and exhaust lines open to the atmosphere were considered. Each of these purge lines is represented by a flow path of cross section area equal to 2.948 ft^2 and a total flow resistance factor equal to 3.98 (entrance and exit loss, three fully open butterfly valves and a debris screen). The most conservative two pairs of 24-inch purge and supply lines were assumed to be open in this calculation. In addition, two 12-inch lines connected to TMD node 29 were modeled as open.

In a computation for ECCS performance, the greatest impact on containment pressure occurs for the purge case of maximum air mass loss, which is based upon the two 12-inch lines being open and involves three open purge lines in the lower compartment (TMD elements 34, 36, and 37) and one purge line open in the upper compartment together with a cold leg break in TMD Volume 1. A total of 2620 pounds of air are calculated to be lost in this case. The maximum air loss case is the limiting case because any steam lost through purging in an ECCS backpressure elevation would otherwise be calculated to condense in the ice bed. Therefore, any steam lost through purging is ultimately of no consequence in the containment pressure determination, while any air loss directly reduces calculated pressure.

The impact of the reduced containment pressure on ECCS performance is accommodated in the calculated peak cladding temperature. While the containment backpressure calculation does not directly incorporate the loss of 2620 pounds of air at the beginning of the accident, the input data is sufficiently biased to produce an estimate of pressure that is lower than "best" estimate. Relative to the historical Westinghouse calculation of containment backpressure, the RLBLOCA analysis is based on a smaller value for the free volume of the Lower Compartment and a larger volume of the Upper Compartment. This produces the same result of blowing less air from the Lower Compartment into the Upper and also results in lower initial compression in the Upper Compartment. On this basis, the Realistic Large Break LOCA analysis permits purging of the Sequoyah containment during normal operation to be conducted through three sets of purge lines.

15.4.1.6 Additional Items Impacting Peak Clad Temperature

Variations in the PCT from the analysis of record as reported herein (due to model assessments, sensitivity analysis, and margin allocations) are reported to the NRC by means of 10CFR50.46.

A sensitivity study has been performed to characterize swelling rupture and relocation (SRR) of fuel fragments. The full case set in the base RLBLOCA analysis was reanalyzed. The SRR sensitivity study applies an 80% packing factor and takes no credit for the droplet shatter model (cooling effects). A comparison of the limiting cases for the base case and the SRR sensitivity study indicate an increase in peak cladding temperature (PCT) with a small increase in the transient maximum local oxidation and a small decrease in the core-wide oxidation. With the addition of SRR effects, the limiting case PCT increased +44ºF. It is widely recognized that, physically, there would be some cooling as a result of steam desuperheating via droplet shattering against the intruding rupture and a related heat transfer enhancement. This cooling mechanism is not credited in the SRR sensitivity

studies. It is also recognized that the packing factor of 80% is not anticipated to occur in the Sequoyah RLBLOCA cases due to the M5® cladding strains observed in the rupture cases. Table 15.4.1-3b reports the RLBLOCA PCT with the addition of SRR effects for Sequoyah plants.

15.4.1.7 Conclusions - Thermal Analysis

For cases considered, the ECCS will meet the Acceptance Criteria as presented in 10CFR50.46. That is:

1. The calculated peak fuel element clad temperature provides margin to the requirement of 2200°F, based on an Fq value of 2.65.

2. The amount of fuel element cladding that reacts chemically with water or steam does not exceed 1 percent of the total amount of zirconium alloy in the reactor.

3. The clad temperature transient is terminated at a time when the core geometry is still amenable to cooling. The clad oxidation limits of 17 percent are not exceeded during or after quenching.

4. The core temperature is reduced and decay heat is removed for an extended period of time, as required by the long-lived radioactivity remaining in the core.

15.4.2 Major Secondary System Pipe Rupture

15.4.2.1 Rupture of a Main Steam Line

15.4.2.1.1 Identification of Causes and Accident Description

The steam release arising from a rupture of a main steam line pipe would result in an initial increase in steam flow which decreases during the accident as the steam pressure falls. Subsequently, excess energy removal from the Reactor Coolant System (RCS) causes a reduction of coolant temperature and pressure. In the presence of a negative moderator temperature coefficient, the cooldown results in a reduction of core shutdown margin. If the most reactive rod cluster control assembly (RCCA) is assumed stuck in its fully withdrawn position after reactor trip, there is an increased possibility that the core will become critical and return to power. A return to power following a steam line rupture is a potential problem mainly because of the high power peaking factors which exist assuming the most reactive RCCA to be stuck in its fully withdrawn position. The core is ultimately shut down by the boric acid injection delivered by the Safety Injection System.

The analysis of a main steam line rupture is performed to demonstrate that the following criterion is satisfied:

> Assuming a stuck RCCA, with or without offsite power, and assuming a single failure in the engineered safeguards there is no consequential damage to the primary system and the core remains in place and intact.

Although DNB and possible clad perforation following a steam line rupture are not necessarily unacceptable, the following analysis, in fact, shows that no DNB occurs for any rupture assuming the most reactive RCCA stuck in its fully withdrawn position.

The following functions provide the necessary protection against the steam pipe rupture:

1. Safety injection system actuation from any of the following:

    a. Two-out-of-three low steam line pressure signals in any one loop
    b. Two-out-of-three low pressurizer pressure signals
    c. Two-out-of-three high containment pressure signals

2. The overpower reactor trips (neutron flux and ΔT) and the reactor trip occurring in conjunction with receipt of the safety injection signal.

3. Redundant isolation of the main feedwater lines. Sustained high feedwater flow would cause additional cooldown. Therefore, in addition to the normal control action which will close the main feedwater valves, a safety injection signal will rapidly close the main and bypass feedwater control valves and trip the main feedwater pumps.

4. Trip of the fast acting steam line stop valves on:

    a. Two-out-of-three low steam line pressure signals in any one loop.
    b. Two-out-of-four high-high containment pressure signals
    c. Two-out-of-three high steam line pressure rate signals in any one loop.

Fast-acting isolation valves are provided in each steam line that are assumed to fully close 8 seconds after a steam line isolation signal setpoint is reached. For breaks downstream of the isolation valves, closure of all valves would completely terminate the blowdown. For any break, in any location, no more than one steam generator would blowdown even if one of the isolation valves fails to close. A description of steam line isolation is included in Chapter 10.

Steam flow is measured by monitoring dynamic head in flow restrictors located in the steam generator nozzles (Unit 1 and Unit 2). The flow restrictors are of considerably smaller diameter than the steam generator nozzles and thereby also serve to limit the maximum steam flow for any downstream break.

15.4.2.1.2 Analysis of Effects and Consequences

Method of Analysis

The analysis of the steam pipe rupture has been performed to determine:

1. The core heat flux, RCS temperature, and pressure resulting from the cooldown following the steam line break. The RELAP5/MOD2-B&W code (Reference 56) is used to calculate system response and the NEMO code (Reference 59) is used to calculate limiting core power distributions.

2. The thermal and hydraulic behavior of the core following a steam line break. A detailed thermal-hydraulic digital-computer calculation (LYNXT code, Reference 60) has been used to determine whether DNB occurs for the core conditions computed in (1) above.

The following conditions were assumed to exist at the time of a main steam line break accident.

1. End-of-life shutdown margin at no-load, equilibrium xenon conditions, and the most reactive RCCA stuck in its fully withdrawn position. Operation of the control rod banks during core burnup is restricted in such a way that addition of positive reactivity in a steam line break accident will not lead to a more adverse condition than the case analyzed.

2. A negative moderator coefficient corresponding to the end-of-life rodded core with the most reactive RCCA in the fully withdrawn position. The variation of the coefficient with temperature and pressure has been included. The effect of power generation in the core on overall reactivity is shown in Figure 15.4.2-1.

   The core properties associated with the sector nearest the affected steam generator and those associated with the remaining sector were conservatively combined to obtain average core properties for reactivity feedback calculations in RELAP5. Further, it was conservatively assumed that the core power distribution was uniform in RELAP5. These two conditions cause under-prediction of the reactivity feedback in the high power region near the stuck rod. To verify the conservatism of this method, the reactivity as well as the power distribution was checked with NEMO for the limiting statepoints shown on Table 15.4.2-1. The NEMO core analysis considered the Doppler reactivity from the high fuel temperature near the stuck RCCA, moderator feedback from the high water enthalpy near the stuck RCCA, power redistribution and nonuniform core inlet temperature effects. For cases in which steam generation occurs in the high heat flux regions of the core, the effect of void formation was also included. A 3-D statepoint analysis with NEMO confirmed that the reactivity employed in the kinetics analysis was larger than the reactivity calculation including the above local effects for the statepoints in Table 15.4.2-1. These results verify conservatism, i.e., under-prediction of negative reactivity feedback from power generation.

3. Minimum capability for injection of boric acid (1950 ppm from the RWST) solution corresponding to the most restrictive single failure in the Safety Injection System. The Emergency Core Cooling System consist of three systems: 1) the passive accumulators, 2) the Residual Heat Removal System, and 3) the Safety Injection System. Only the Safety Injection System and the accumulators are modeled for the steam line break accident analysis.

   The injection curve used is shown in Figure 15.4.2-2. The flow corresponds to that delivered by one SI pump delivering its full flow to the cold leg header. Subsequent to this analysis, the minimum safety injection pump performance requirements were reduced from those shown in Figure 15.4.2-2. However, the flow reduction was more than off-set by the minimum flow available from one centrifugal charging pump. While not specifically modeled in the OSG analysis, the flow from one charging pump is also credited in Reference 72 to establish that the results of the analysis remain conservative and bounding for the current safety injection pump minimum performance requirements in Figure 6.3.2-6. The analysis conservatively assumes that the safety injection lines downstream of the second check valve removed from the cold leg, has a boron concentration of 0 ppm. Modeling an unborated purge volume accounts for possible dilution via the diffusion of RCS coolant back into the lines plus potential leakage of the first set of check valves. Once the unborated water is purged, boron is assumed to be injected into the RCS at a concentration of 1950 ppm via a single intermediate head pump. This is a reasonable method of modeling postacident boron injection in that it both is conservative and reflective of the actual plant configuration. Subsequent to the original Framatome analysis, sensitivity studies have been performed related to the assumption of boron delivery to the RCS for the main steam line break event. The sensitivity studies examine the extent that leakage/diffusion of RCS coolant can occur in the safety injection lines before the results of the limiting case are adversely affected. The studies show that coolant with a boron concentration equivalent to that of the End of Life RCS (0 ppm) can exist in the safety injection system piping back as far as three check valves removed from the cold leg up to the discharge of the safety injection pump. A boron concentration of 1950 ppm is assumed from the RWST to the discharge of the SI pumps with 0 ppm from the pump discharge to the RCS. Based on these conditions, the limiting break (a complete severance of the steam line upstream of the pipe flow reducer with offsite power available), remains valid and limiting. The sensitivity studies performed prove that the original Framatome analysis remains bounding and the return to power associated with the other nonlimiting steam line break cases will also remain less than the

return to power associated with the limiting case assuming 0 ppm boron back to the discharge of the SI pump. Based on the system design and the Technical Specification required venting surveillance (with a 31 day frequency) of the SI pump and piping, it is technically acceptable to allow the assumption of a 1950 ppm boron concentration in the SI pump and suction piping for the main steam line break event.

For the cases with offsite power assumed, the following alignment sequence takes place prior to coolant injection via the Safety Injection System. After the generation of the safety injection signal (with appropriate delays for instrumentation, logic, and signal transport included), the makeup tank is isolated and the SI pump suction is aligned with the refueling water storage tank. In 28 seconds the pump is aligned and considered to be at full speed. The volume of unborated water in the pump discharge piping is swept into the RCS before the 1950 ppm water from the RWST reaches the core. The "purge" delay, described above, is explicitly modeled.

In the cases where offsite power is not available, an additional 30 second delay is assumed to allow for starting and loading the necessary safety injection equipment on to the diesel generators.

4. Four combinations of break sizes and initial plant conditions have been considered in determining the core power RCS transients:

   A. Complete severance of a pipe outside the containment (downstream of the steam flow measuring nozzle) with the plant initially at no load conditions, full reactor coolant flow with offsite power available.

   B. Complete severance of a pipe inside the containment at the outlet of the steam generator (upstream of the steam flow measuring nozzle) with the plant initially at no load conditions, full reactor coolant flow with offsite power available. Note: The design of the replacement steam generators on Unit 1 and Unit 2 includes an integral flow limiter in the main steam nozzle, which eliminates the potential for a main steam line break upstream of the flow limiter.

   C. Case (A) above with loss of offsite power. Loss of offsite power results in coolant pump coastdown.

   D. Case (B) above with the loss of offsite power.

5. Power peaking factors corresponding to one stuck RCCA and nonuniform core inlet coolant temperatures are determined for end-of-life core conditions. The coldest core inlet temperatures

   are assumed to occur in the sector with the stuck rod. The power peaking factors account for the effect of the local fluid conditions in the region of the stuck control assembly during the return to power phase following the steam line break. These fluid conditions in conjunction with the large negative moderator coefficient partially offsets the effect of the stuck assembly. The power peaking factors depend upon the core power, temperature, pressure, and flow, and thus are different for each case studied.

   The limiting statepoint conditions of the four steam line break accidents analyzed are given in Table 15.4.2-1. The limiting case is selected on the basis of hot channel factors, core power, core inlet temperature, and reactor coolant pressure. The core parameters evaluated for each of the cases correspond to values determined from the respective transient analysis.

The reactor is protected in at-power conditions by the normal overpower protection system. All the cases assume initial hot zero power conditions, however, since this represents the most pessimistic initial condition. The lack of stored energy in the core, high initial steam generator liquid inventory, and high steam pressure associated with this operational mode all contribute to a conservative over-cooling event.

6. In computing the steam flow during a steam line break, the Moody Curve (Reference 22) for fL/D = 0 is used.

7. Non-homogeneous flow in the steam generator and high moisture separation in the moisture separator is assumed. The assumption leads to conservative results since, in fact, considerable water would be discharged. Water carryover would reduce the magnitude of the temperature decrease in the core and the pressure increase in the containment.

8. A conservatively high auxiliary feedwater flow rate (2350 gpm) is assumed to be delivered to the faulted steam generator. This auxiliary feedwater is not required to mitigate the transient and is modeled to increase the severity of the core cooldown.

Results

The results presented are a conservative indication of the events which would occur assuming a steam line rupture since it is postulated that all of the conditions described above occur simultaneously.

Core Power and Reactor Coolant System Transient

Figures 15.4.2-3 through 15.4.2-10 show the RCS transient following a main steam line rupture (complete severance of a pipe) outside the containment, downstream of the flow measuring nozzle at initial no load conditions (Case A). The break assumed is the largest break which can occur anywhere outside the containment either upstream or downstream of the isolation valves.

Offsite power is assumed available such that full reactor coolant flow exists. The transient shown assumes an uncontrolled steam release from only one steam generator. Should the core be critical at near zero power when the rupture occurs the initiation of safety injection signal by low steam line pressure will trip the reactor and isolate the steam lines. Even with the failure of one steam line valve, release is limited to no more than 10 seconds for the other steam generators while the one steam generator blows down. The steam line isolation valves are required to be closed within the time specified by the technical specifications.

As shown in the reactivity plot (Figure 15.4.2-7) the core attains criticality with the rod cluster control assemblies inserted (with the design shutdown of 1600 pcm assuming one stuck assembly) before a boron solution of approximately 1950 ppm enters the RCS from the Safety Injection System. The delay time associated with boron delivery consists of system alignments and discharge line purging described above. Core power peaks well below the nominal full power value.

The accumulators provide an additional source of borated water (1950 PPM) after the RCS pressure decreases to below 641.5 psig. The calculation assumes the 1950 ppm boric acid is mixed with, and diluted by the water flowing in the RCS prior to entering the reactor core. The concentration after

mixing depends upon the relative flow rates in the RCS and in the Safety Injection System. The variation of mass flow rate in the RCS due to water density changes is included in the calculation as is the variation of flow rate from the Safety Injection System and the accumulator due to changes in the RCS pressure. The core boron concentration vs. time for each of the four cases analyzed is shown in Figures 15.4.2-8, 15.4.2-16, 15.4.2-24, and 15.4.2-32.

Figures 15.4.2-11 through 15.4.2-18 show Case B, a steam line rupture at the exit of a steam generator (upstream of the flow measuring nozzles) at no load. The sequence of events is similar to those of Case A except that criticality is attained earlier due to more rapid cooldown and a higher peak core average power is attained.

Figures 15.4.2-19 through 15.4.2-26 and 15.4.2-27 through 15.4.2-34 show the responses of the salient parameters for Case C and Case D, respectively. These cases correspond to the cases discussed above with the added complication of a loss of offsite power at the time of break initiation; Case C assumes a break downstream from the flow measuring device and Case D assumes an upstream break. Safety injection begin 60 seconds after the break; delays associated with system alignment, diesel generator startup, and pump discharge line purging are accounted for. In both Case C and Case D, criticality is achieved later and the core power increase is slower than in the similar case with offsite power available. The ability of the emptying steam generator to extract heat from the RCS is reduced by the decreased flow in the RCS. For both these cases the peak core power remains well below the nominal full power value.

The sequence of events tables for the Main Steam Line Break analyses are included in Table 15.4.1-12, Sheets 1 and 2. It should be noted that following a steam line break only one steam generator blows down completely. Thus, the remaining steam generators are still available for long-term core cooling after the initial transient is over. Operators are instructed to maintain the intact steam generator levels within the narrow range level scale. In cases assuming a loss of offsite power core decay heat is removed to the atmosphere via the steam line safety valves which have been adequately sized for this purpose.

Generic thermal stress analyses and subsequent fracture mechanics analyses of reactor vessels have been performed for 4-Loop plants. These analyses were applied to a 4-Loop reactor vessel having material properties and end of life (40 years) accumulated fluence similar to the Sequoyah vessel. The fracture mechanics analysis utilized linear elastic fracture mechanics method in the evaluation of the reactor vessel integrity. The fracture mechanics analysis results show that the reactor vessel integrity under large steam line break conditions would be maintained over the design life of the vessel.

Steam pressure from the steam generators is relieved by the steam dump system, secondary system atmospheric safety valves, or secondary system relief valves. The operator is instructed to terminate auxiliary feedwater flow to the faulted steam generator as soon as he determines which steam generator is faulted. As soon as an indicated water level returns to the pressurizer the operator is instructed to turn off the safety injection pumps and restrict the charging pumps as required.

Following a steam line break incident, a steam line isolation signal will be generated almost immediately, causing the steam line isolation valves to close within a few seconds. If the break is downstream of the isolation valves, all of which subsequently close, the break will be isolated. If the

break is upstream of the isolation valves or one valve fails to close, the break will be isolated to three steam generators while the faulted one will continue to blow down. Only the case in which one steam generator continues to blow down is discussed here since the break followed by isolation of all steam generators will terminate the transient.

A safety injection signal (generated a few seconds after the break) will cause main feedwater isolation to occur. The only source of water available to the faulted steam generator is then the auxiliary feedwater system. Following steam line isolation, steam pressure in the steam line with the faulted steam generator will continue to fall rapidly, while the pressure stabilizes in the remaining three steam lines. The indication of the different steam pressures will be available to the operator within a few seconds of steam line isolation. This will provide the information necessary to identify the faulted steam generator so that auxiliary feedwater to it can be isolated. Manual controls are provided in the control room for start and stop of the auxiliary feedwater pumps and for the control valves associated with the auxiliary feedwater system. The means for detecting the faulted steam generator and isolation of auxiliary feedwater to it requires only the use of safety grade equipment available following the break. The removal of decay heat in the long term (following the initial cooldown) using the remaining steam generators requires only the Auxiliary Feedwater System as a water source and the secondary system safety valves and/or the power operated relief valve to relieve steam. Power to the motor driven auxiliary feedwater pumps is supplied by the onsite diesel generator units. The turbine driven AFW pump has redundant steam supplies. Flow (440 gpm) from one motor-driven auxiliary feedwater pump to one steam generator is sufficient for long term cooling.

The operator has available, in the control room, an indication of pressurizer water level from the instrumentation used in the reactor protection system. Indicated water level returns to the pressurizer in approximately five to seven minutes following the steam line break. The Operators have the procedures and equipment necessary to terminate the safety injection and gain control of the pressurizer level prior to pressurizer overfill. The pressurizer level instrumentation and manual controls for operation of the charging pumps meet the required standards for safety systems.

As indicated, the information for terminating auxiliary feedwater is available to the operator within one minute of the break while the information required for stopping the charging pumps and safety injection pump becomes available within five to seven minutes following the break. The requirements to terminate auxiliary feedwater flow to the faulted steam generator and stop the charging pumps and safety injection pumps can be met by simple switch actions by the operators, i.e., closing auxiliary feed discharge valves and stopping charging pumps and safety injection pumps. Thus, the required simple actions to limit the cooldown and depressurization can be easily recognized, planned, and performed within ten minutes. For the longer time requirements for decay heat removal and plant cooldown the operator has time on the order of hours to respond.

The worst case condition for long term cooling following a steam line break is loss of offsite power with failure of one emergency power train, since the condition requires the greatest amount of operator action and the longest time to achieve cold shutdown. However, since the plant can be maintained safely at hot standby conditions for extended periods of time, there is no safety requirement which dictates rapid achievement of cold shutdown conditions.

With only onsite power available, the plant can be maintained in a safe hot standby condition using the intact steam generators by supplying feedwater with the auxiliary feedwater system, and venting steam through the secondary side, power-operated relief valves. The relief valves will be controlled to gradually reduce pressure and temperature as the core residual heat decays. If the relief valves

are not available, the safety valves will be used for steam dump. In this case, the primary system pressure would be controlled such that adequate subcooling is maintained. Primary system temperature would be maintained at that value necessary to lift the steam generator safety valves as necessary to match the decay heat from the core. This temperature would be approximately 553 F which corresponds to the lowest steam generator safety valve setpoint of 1064 psig. For either means of steam relief, the steam generator water level will be maintained within the span of the narrow range indicators.

Margin to Critical Heat Flux

A complete set of statepoints are reviewed to determine the most limiting condition. Past experience in performing DNB analyses for steam line breaks for Westinghouse cores has shown that Case B (inside break with offsite power) is always worse than Case A. Cases A and B generally have very similar temperatures and pressures, but Case B returns to a power level of 1.5 to 2 percentage points greater than Case A. It is this higher power level that makes Case B the worse of the two.

A detailed nuclear and thermal-hydraulic analysis of this limiting steam line break, Case B, statepoint (see Table 15.4.2-1) is performed or dispositioned on a cycle-specific basis. This analysis ensures that the appropriate design limit requirements are met (indicating that DNB will not occur during this event) or conducts a census of pins which are expected to experience DNB. This is done on a cycle-specific basis because cycle-specific core peaking data is necessary for a detailed analysis. Historically, the DNBR has been very high compared to the safety limits and it has been shown that DNB will not occur.

15.4.2.1.3 AREVA Safety Evaluation with Replacement Steam Generators in Unit 1 and Unit 2

The thermal response characteristics of the transient discount a challenge to the RCS and main steam system pressure limit. RCS pressure is reduced throughout the transient in response to the excessive heat removal from the steam generators. Therefore, this event is analyzed for DNB concerns.

Sequoyah has replaced the steam generators in both Units 1 and 2. Compared to the original steam generators (OSG) and pertinent to the steam line break event, the replacement steam generators (RSG) has a flow restrictor at the steam generator outlet with an area of 1.42 ft^2, and an increased heat transfer surface area. Both the heat transfer area and break size are critical parameters that affect the system and core responses during a steam line break. The limiting steam line break event therefore was reanalyzed for the RSG utilizing identical methods described in Section 15.4.2.1.2. The limiting event (Case B) is a complete severance of a pipe inside containment downstream of the integral flow limiter in the main steam nozzle. The plant is initially at no load conditions, full reactor coolant flow, and with offsite power available. Further, the RSG analysis explicitly included a reduction in the minimum safety injection pump performance requirements to those illustrated in Figure 15.4.2-2 along with credit for one centrifugal charging pump as discussed in Reference 72.

Figure 15.4.2-35 through 15.4.2-38 show the calculated plant parameters following a limiting steam line break inside containment with offsite power. The calculated sequence of events is presented in Table 15.4.1-12, Sheet 3.

The RELAP5/MOD2 analysis results for the RSG are similar to the OSG analysis (Case B). With the RSG, the return to power is slightly smaller than that of the OSG. In addition, the RCS pressure remains higher at the time of peak power; however, the RCS average temperature is also slightly higher at the time of peak power. As a result, the LYNXT analysis showed a slightly higher margin

to DNB. Therefore, the analysis with OSGs remains bounding and applicable to Sequoyah Unit 1 and Unit 2 with RSGs. All acceptance criteria for this event continue to be met subsequent to the installation of the RSGs.

15.4.2.2 Major Rupture of a Main Feedwater Pipe

15.4.2.2.1 Identification of Causes and Accident Description

A major feedwater line rupture is defined as a break in a feedwater pipe large enough to prevent the addition of sufficient feedwater to the steam generators to maintain shellside fluid inventory in the steam generators. If the break is postulated in a feedline between the check valve and the steam generator, fluid from the steam generator may also be discharged through the break.

Further, a break in this location could preclude the subsequent addition of auxiliary feedwater to the affected steam generator. If the break is postulated in a feedline upstream of the check valve, it would affect the Nuclear Steam Supply System only as a loss of feedwater (see Subsection 15.2.8). If the break occurs upstream or downstream of the feedline check valve in the main steam valve vaults, the main feedwater isolation valves may become submerged due to flooding and fail to respond to automatic or manual control/isolation signals and/or may spuriously fully or partially close. However, since main feedwater isolation is not necessary to mitigate the consequences of a feedwater line break (see Subsection 15.4.2.2.2) or loss of feedwater event (see Subsection 15.2.8), the loss of operability of the main feedwater isolation valves is an acceptable consequence of a main feedwater line break in the main steam valve vaults (Reference 57). Similarly, the main steam isolation bypass valves and their operators would also be submerged, the MSIBVs are closed and their control circuits deenergized during power operation and so they remain closed following submergence. In addition, the MFIVs and MSIBVs are designated as containment isolation valves and have post-accident monitoring valve position indication in the MCR which would also be lost or be unreliable. However, since valve position indication is not utilized to mitigate a loss of MFW nor MFLB event, loss of position indication for these valves is an acceptable consequence of a main feedwater line break in the main steam valve vaults (again, see Reference 57).

Depending upon the size of the break and the plant operating conditions at the time of the break, the break could cause either a RCS cooldown (by excessive energy discharge through the break), or a RCS heatup. Potential RCS cooldown resulting from a secondary pipe rupture is evaluated in Paragraph 15.4.2.1, "Rupture of a Main Steam Line." Therefore, only the RCS heatup effects are evaluated for a feedline rupture.

A feedline rupture reduces the ability to remove heat generated by the core from the RCS because of the following reasons:

1. Feedwater to the steam generators is reduced. Since feedwater is subcooled, its loss may cause reactor coolant temperatures to increase prior to reactor trip;

2. Liquid in the steam generator may be discharged through the break, and would then not be available for decay heat removal after trip;

3. The break may be large enough to prevent the addition of any main feedwater after trip.

An Auxiliary Feedwater System is provided to assure that adequate feedwater will be available such that:

1. No substantial overpressurization of the RCS shall occur; and

2. Liquid in the RCS shall be sufficient to cover the reactor core at all times.

The severity of the feedwater line break transient depends on a number of system parameters including break size, initial reactor power, and credit taken for the functioning of various control and safety systems. Based on sensitivity studies, it has been shown that the most limiting feedwater line rupture is a double-ended rupture of the largest feedwater line, occurring at full power with and without loss of offsite power, with no credit taken for pressurizer spray. The method of analysis, results, and conclusions for these cases are discussed below. A number of analyses have also been performed based on the functioning of the EAM and TTD safety systems. These analyses are discussed in Reference 53.

The following provides the necessary protection against a main feedwater rupture;

1. A reactor trip on any of the following conditions:

    a. High pressurizer pressure,
    b. Overtemperature delta-T
    c. Low-low steam generator water level in one or more steam generator,
    d. Safety injection signals from either of the following:

        i. Low steam line pressure
        ii. High containment pressure

        (Refer to Chapter 7 for a description of the actuation system.)

2. An Auxiliary Feedwater System to provide an assured source of feedwater to the steam generators for decay heat removal. (Refer to Section 10.4.7.2 for description of the Auxiliary Feedwater System.)

15.4.2.2.2 Analysis of Effects and Consequences

Analysis of the effects and consequences following a main feedwater line break have been conducted by the licensee and by Framatome Technologies Inc. Both analyses determine the plant transient upon such an event. The licensee analysis examines the pressure response inside containment using the MONSTER code (Reference 55) and is documented in Reference 56. The licensee analysis focuses on a reactor trip initiated by a safety-injection signal upon receipt of High Containment pressure. The analysis conducted by Framatome as follows focuses on a reactor trip following a low-low steam generator water level in one or more steam generators. The steam generators are assumed to have 15% of the tubes plugged.

Method of Analysis

A detailed analysis using RELAP5/MOD2 (Reference 60) is performed to obtain the plant parametric response due to a feedline rupture. The digital computer simulator of RELAP5 includes plant nuclear kinetics, reactor coolant system (with pressurizer and steam generators), main feedwater, auxiliary feedwater, and safety injection systems. The code computes the resultant system parameters including the steam generator level, pressurizer water level, and the reactor coolant average temperature.

Major assumptions are:

1. The plant is initially operating at 102% of the engineered safeguards design rating.

2. Initial reactor coolant average temperature is 5.5°F above the nominal value, and the initial pressurizer pressure is 30 psi above its nominal value.

3. No credit is taken for the pressurizer spray.

4. No credit is taken for the high pressurizer pressure reactor trip.
   Note: This assumption is made for calculational convenience. Pressurizer power-operated relief valves and spray could act to delay the high pressure trip. Assumptions 3 and 4 permit evaluation of one hypothetical, limiting case rather than two possible cases: one with a high pressure trip and no pressure controls; and one with a pressure control but no high pressure trip.

5. Main feed water to all steam generators is assumed to stop at the time the break occurs.

6. Discharge through the break in the affected steam generator is not restricted to liquid only. Two-phase discharge is modeled at the break.

7. No credit is taken for the low-low water level trip on the affected steam generator until the steam generator level reaches 0% of the narrow range span and after the expiration of any applicable delays imposed by the TTD System.

8. The worst possible break area is assumed; i.e., one that ensures that the initial reactor coolant system depressurization is maximized. This assumption minimizes subcooling margin during the post trip reactor coolant heatup period.

9. No credit is taken for heat energy deposited in reactor coolant system metal during the Reactor Coolant System heatup.

10. No credit is taken for charging or letdown.

11. Loss of offsite electrical power is assumed after the reactor trip, and reactor coolant flow decreases to natural circulation.

12. The RELAP5 code realistically calculates the appropriate heat transfer based upon the prevailing physical conditions in the generator.

13. Conservative core residual heat generation is assumed based upon long term operation at the initial power level preceding the trip.

14. The auxiliary feedwater is actuated by the low-low steam generator water level signal. The auxiliary feedwater system is assumed to supply a total of 410 gpm to two unaffected steam generators as follows:

    a. The turbine-driven pump is assumed to fail.

    b. The motor-driven pump supplying the faulted steam generator is assumed to conservatively spill all its flow out the break. The intact steam generator aligned to that pump is therefore assumed to receive no flow.

    c. The remaining motor-driven pump supplies flow to two intact steam generators.

    A 60 second delay was assumed following the low-low level signal to allow time for startup of the emergency diesel generators and the auxiliary feedwater pumps.

Note: An auxiliary feedwater system failure scenario involving a motor-driven pump was also analyzed by Westinghouse with 5% of the tubes plugged in the steam generators. See discussion under the "Results" section for a description of the scenario, assumptions, and results. Framatome has confirmed that the discussion is also applicable to the 15% steam generator tube plugging condition.

Results

Comparing the analyses conducted by the licensee and Framatome, the Framatome analysis bounds the licensee analysis, with regard to RCS heatup. Results from the Framatome analysis are presented herein.

Figures 15.4.2-39 and -40 show the calculated plant parameters following a feedline rupture for the case with offsite power. Figures 15.4.2-41 and -42 show similar results from the case with loss of offsite power. The calculated sequence of events for both cases analyzed are presented in Table 15.4.1-9.

The system response following the feedwater line rupture is similar for both cases analyzed. The results show that the pressures in the RCS and main steam system remain below 110 percent of the respective design pressures. Pressurizer pressure remains at or slightly below the steady-state pressure before the reactor trip on low-low steam generator level. When the turbine trips on reactor trip, the primary pressure shows a rapid increase due to the mismatch between the heat generated and the heat removed by the steam generators. This is followed by reduction in heat generation in the core due to rod drop and the event becomes an overcooling event. The primary pressure drops rapidly due to cooldown and the pressurizer level drops. When the low steamline pressure SI signal actuates isolation of the steam generators from the affected generator, the primary system heats up. The primary safety valves do not open in this event. Safety injection is actuated by the low steamline pressure signal and the reactor vessel and the pressurizer start to refill to original levels. When the intact steam generators fill back up to normal levels, the steam produced in the steam generators is relieved through the MSSVs and a viable heat removal mechanism is maintained via the auxiliary feedwater.

In both of the cases, the core remains fully covered with water throughout the transient. The auxiliary feedwater is capable of removing the decay heat and cooling the primary system. Bulk boiling does not occur in the RCS at any time in the transient.

An evaluation of the full power feedline rupture and the part-power feedline rupture cases analyzed for the TTD system was performed by Westinghouse (for the 5 percent plugged tubes) considering an auxiliary feedwater system failure scenario involving a motor-driven pump. This evaluation is valid for the 15 percent tube plugging levels since the conclusions are not dependent upon the tube plugging levels. Under this scenario, the auxiliary feedwater system is assumed to provide 1070 gal/min to 3 unaffected steam generators 10 minutes after the low-low steam generator water level signal. Assuming a feedline rupture to loop 4, the following assumptions were made:

1. Steam Generators 1 and 2 receive no auxiliary feedwater from the Train A motor-driven auxiliary feedwater pump (single failure).

2. Steam Generators 3 and 4 receive no auxiliary feedwater from the Train B motor-driven auxiliary feedwater pump (all flow out of the break).

3. The turbine-driven auxiliary feedwater pump flow spills out of the break (Steam Generator 4) and thereby starves the remaining unfaulted steam generators (1, 2, and 3).

4. Operator action isolates the auxiliary feedwater line from the turbine-driven auxiliary feedwater pump and the Train B motor-driven auxiliary feedwater pump. Ten minute operator action is taken credit for isolating the auxiliary feedwater system from the faulted steam generator.

The turbine-driven auxiliary feedwater pump provides flow to Steam Generators 1, 2, and 3, and the motor-driven auxiliary feedwater pump provides flow to Steam Generator 3. A total of 1070 gal/min auxiliary feedwater is available after the 10 minute operator action time to the three unfaulted steam generators. The secondary side steam pressure in the unfaulted steam generators, which drives the turbine-driven AFW pump, reaches and remains at or near the Main Steam safety valve (MSSV) set point pressure during the critical transient time (AFW initiation to event turnaround) and after event turnaround. After event turnaround, less AFW is required to continue plant cooldown.

The single failure of the turbine-driven pump proved more limiting for the full power feedline break cases. The single failure case of the motor-driven auxiliary feedwater pump does not invalidate the TTD analysis presented in Reference 53.

15.4.2.2.3 Conclusion

Results of the analysis show that for the postulated feedline rupture, the assumed Auxiliary Feedwater System capacity is adequate to remove decay heat, to prevent overpressurizing the RCS, and to prevent uncovering the reactor core.

The Rupture of a Main Feedwater Pipe event has been evaluated with respect to the CENP-Westinghouse steam generator replacement at Sequoyah Unit 1 and Unit 2. The evaluation concludes that the parameters important to the consequences of this event are not adversely affected by the RSG.

15.4.3 Steam Generator Tube Rupture

15.4.3.1 Identification of Causes and Accident Description

The accident examined is the complete severance of a single steam generator tube. The accident is assumed to take place at power with the reactor coolant contaminated with fission products corresponding to continuous operation with a limited amount of defective fuel rods. The accident leads to an increase in contamination of the secondary system due to leakage of radioactive coolant from the RCS. In the event of a coincident loss of offsite power, or failure of the condenser dump system, discharge of activity to the atmosphere takes place via the steam generator safety and/or power operated relief valves.

In view of the fact that the steam generator tube material is Inconel 600 and is highly ductile material, it is considered that the assumption of a complete severance is somewhat conservative. The more probable mode of tube failure would be one or more minor leaks of undetermined origin. Activity in the steam and power conversion system is subject to continual surveillance and an accumulation of minor leaks which exceed the limits established in the Technical Specifications is not permitted during the unit operation.

The operator is expected to determine that a steam generator tube rupture has occurred, and to identify and isolate the faulty steam generator on a restricted time scale in order to minimize

contamination of the secondary system and ensure termination of radioactive release to the atmosphere from the faulty unit. The recovery procedure can be carried out on a time scale which ensures that break flow to the secondary system is terminated before water level in the affected steam generator rises into the main steam pipe. Sufficient indications and controls are provided to enable the operator to carry out these functions satisfactorily.

Consideration of the indications provided at the control board, together with the magnitude of the break flow, leads to the conclusion that the isolation procedure can be completed within 30 minutes of accident initiation.

Assuming normal operation of the various plant control systems, the following sequence of events is initiated by a tube rupture:

a. Pressurizer low pressure and low level alarms are actuated and charging pump flow increases in an attempt to maintain pressurizer level. On the secondary side there is a steam flow/feedwater flow.

   Mismatch before trip as feedwater flow to the affected steam generator is reduced due to the additional break flow which is now being supplied to that steam generator.

b. Continued loss of reactor coolant inventory leads to a reactor trip signal generated by low pressurizer pressure. Resultant plant cooldown following reactor trip leads to a rapid change of pressurizer level, and the safety injection signal, initiated by low pressurizer pressure, and follows soon after the reactor trip. The safety injection signal automatically terminates normal feedwater supply and initiates auxiliary feedwater addition.

c. The steam generator blowdown liquid monitor, main steamline monitor, and the condenser off gas radiation monitor will alarm, indicating a sharp increase in radioactivity in the secondary system. The steam generator blowdown liquid monitor will automatically terminate steam generator blowdown.

d. The reactor trip automatically trips the turbine and if offsite power is available the steam dump valves open permitting steam dump to the condenser. In the event of a coincident station blackout, the steam dump valves would automatically close to protect the condenser. In this case, the steam generator pressure would rapidly increase resulting in steam discharge to the atmosphere through the steam generator safety and/or power operated relief valves.

e. Following reactor trip, the continued action of auxiliary feedwater supply and borated safety injection flow (supplied from the refueling water storage tank) provide a heat sink which absorbs some of the decay heat. Thus, steam bypass to the condenser, or in the case of loss of offsite power, steam relief to atmosphere, is attenuated during the 30 minutes in which the recovery procedure leading to isolation is being carried out.

f. Safety injection flow results in increasing pressurizer water level. The time after trip at which the operator can clearly see returning level in the pressurizer is dependent upon the amount of operating auxiliary equipment.

15.4.3.2 Analysis of Effects and Consequences

Method of Analysis

In estimating the mass transfer from the RCS through the broken tube the following conservative assumptions are made:

a. Reactor trip occurs automatically as a result of low pressurizer pressure.

b. Following the initiation of the safety injection signal, all centrifugal charging SI pumps are actuated and continue to deliver flow for 30 minutes.

c. After reactor trip the break flow reaches equilibrium at the point where incoming safety injection flow is balanced by outgoing break flow. The resultant break flow persists for 30 minutes beyond initiation of the accident.

d. The steam generators are controlled at the safety valve setting rather than the power operated relief valve setting. Auxiliary feedwater flowrate equivalent to approximately 2% of the nominal main feedwater flowrate (660 gal/min) is assumed to be available to all steam generators.

e. The operator identifies the accident type and terminates break flow to the faulty steam generator within 30 minutes of accident initiation. Included in this 30 minute time period would be an allowance of 5 minutes to trip the reactor and actuate the safety injection system, 10 minutes to identify the accident as a steam generator tube rupture and 15 minutes to isolate the faulty steam generator.

Mass and energy balance calculations are performed to determine primary to secondary mass release and to determine amount of steam vented from each of the steam generators.

Recovery Procedure

Immediately apparent symptoms of a tube rupture accident such as falling pressurizer pressure and level and increased charging pump flow are also symptoms of small steam line breaks and loss of coolant accident. It is therefore important for the operator to determine that the accident is a rupture of a steam generator tube in order that he may carry out the correct recovery procedure. The accident under discussion is uniquely identified by a main steam line radiation alarm, condenser air ejector radiation alarm and/or a steam generator blowdown radiation alarm and the operator will proceed with the following recovery procedures if one of these alarms is received. In the event of a relatively large rupture, it will be clear soon after trip that the level in one steam generator is rising more rapidly than in the other. This too is a unique indication of a tube rupture accident.

The operator carries out the following procedures subsequent to reactor trip which lead to isolation of the ruptured steam generator and to unit cooldown.

With Offsite Power Available:

a. Identify ruptured steam generator by rising water level or high radiation indication in shell side fluid.

b. Isolate flow from ruptured steam generator by closing the main steam isolation valve and bypass valve, steam generator blowdown valves, and turbine-driven auxiliary feedwater pump steam supply from ruptured steam generator.

c. When water level in ruptured steam generator is above a minimum level, then isolate auxiliary feedwater flow to ruptured steam generator.

d. Initiate RCS cooldown by dumping steam from intact steam generators to condenser. This action is required to establish adequate subcooling to permit reducing RCS pressure.

e. When adequate subcooling is established, then reduce RCS pressure using pressurizer sprays or a power-operated relief valve to terminate break flow and restore pressurizer level.

f. Verify SI termination criteria is met and then terminate ECCS flow.

g. Resume RCS cooldown using intact steam generators until RHR system is placed in service.

Without Offsite Power:

a. Identify ruptured steam generator by rising water level or high radiation indication in shell side fluid.

b. Isolate flow from ruptured steam generator by closing the main steam isolation valve and bypass valve, steam generator blowdown valves, and turbine-driven auxiliary feedwater pump steam supply from ruptured steam generator.

c. When water level in ruptured steam generator is above a minimum level, then isolate auxiliary feedwater flow to ruptured steam generator.

d. Initiate RCS cooldown using atmospheric relief valves on intact steam generators. This action is required to establish adequate subcooling to permit reducing RCS pressure.

e. When adequate subcooling is established, then reduce RCS pressure using a pressurizer power-operated relief valve to terminate break flow and restore pressurizer level.

f. Verify SI termination criteria is met and then terminate ECCS flow.

g. Resume RCS cooldown using intact steam generators until RHR system is placed in service.

After the Residual Heat Removal System is placed in operation, the condensate accumulated in the secondary system can be examined and processed as required.

Section 15.4.3.1 describes the accident sequence as analyzed. The flow from a broken tube is assumed to reach an equilibrium at the point where safety injection flow is balanced by break flow. This break flow is conservatively assumed to persist until 30 minutes following accident initiation at which time the operator will have terminated the break flow through the faulty steam generator. Section 15.4.3.2 outlines operations which the operator could perform to terminate flow through the faulty steam generator.

Following isolation of the faulty steam generator, the primary pressure is reduced by either pressurizer spray or operation of the pressurizer power operated relief valve. It should be noted that the reduction in primary pressure will result in a decrease in break flow. When the primary pressure has been reduced to ruptured steam generator pressure, excess makeup flow is stopped and break flow is terminated.

The core will remain completely covered by liquid throughout the accident, thus clad temperatures will remain very near the saturation temperature of the coolant, even if DNB was postulated to occur.

There is ample time available to carry out the above recovery procedures such that isolation of the affected steam generator is established before water level rises into the main steam pipes. This analysis used 30 minutes as the time that operators stop flow from the primary to the secondary side of the faulted steam generator; however, at least 40 minutes is available for operators to stop this flow before the water level rises into the main steam pipes.

Results

The previous assumptions lead to a conservative estimate for the total amount of reactor coolant transferred to the secondary side of the ruptured steam generator as a result of a tube rupture accident. Approximately 172,700 lbs. of reactor coolant is discharged to the secondary side of the ruptured steam generator before break flow is isolated at 30 minutes (8400 lbs. before reactor trip and at 164,300 lbs. after reactor trip). Reactor trip occurs at 65 seconds into the accident. A fraction of the break flow flashes directly to steam while the remainder mixes with the secondary coolant in the steam generator. This flashing fraction is conservatively determined based on hot leg temperature to be 18.0% prior to reactor trip and 4.74% after reactor trip.

Also, approximately 138,900 lbs. of steam are released from the ruptured steam generator to the atmosphere during the 30-minute period (76,588 lbs. before reactor trip and 62,312 lbs. after reactor trip). The steam releases from the intact steam generators were conservatively calculated to be:

0 - 65 sec.	232,000 lbs.
65 - 1800 sec.	170,000 lbs.
0.5 - 2.0 hr.	360,000 lbs.
2 - 8 hr.	1,237,000 lbs.

The accident radiological consequences are reported in Section 15.5.5 based on the above values for break flows, flashing fractions, and steam releases.

15.4.3.3 Conclusions

A steam generator tube rupture will cause no subsequent damage to the Reactor Coolant System or the reactor core. An orderly recovery from the accident can be completed even assuming simultaneous loss of offsite power.

The Steam Generator Tube Rupture event has been evaluated with respect to the CENP-Westinghouse steam generator replacement at Sequoyah Unit 1 and Unit 2. The evaluation concludes that the parameters important to the consequences of this event are not adversely affected by the RSG.

15.4.4 Single Reactor Coolant Pump Locked Rotor

15.4.4.1 Identification of Causes and Accident Description

The accident postulated is an instantaneous seizure of a reactor coolant pump rotor. Flow through the affected reactor coolant loop is rapidly reduced, leading to an initiation of a reactor trip on a low flow signal.

Following initiation of the reactor trip, heat stored in the fuel rods continues to be transferred to the coolant causing the coolant to expand. At the same time, heat transfer to the shell side of the steam generators is reduced, first because the reduced flow results in a decreased tube side film coefficient and then because the reactor coolant in the tubes cools down while the shell side temperature increases (turbine steam flow is reduced to zero upon plant trip). The rapid expansion of the coolant in the reactor core, combined with reduced heat transfer in the steam generators causes an insurge into the pressurizer and a pressure increase throughout the Reactor Coolant System. The insurge into the pressurizer compresses the steam volume, and may open the pressurizer safety valves in the analysis. For conservatism in peak pressures, the power-operated relief valves are not included in the analysis.

15.4.4.2 Analysis of Effects and Consequences

Method of Analysis

Two digital computer codes are used to analyze this transient. The RELAP5/MOD2-B&W code (Reference 60) is used to calculate the resulting loop and core flow transients following the pump seizure, the time of reactor trip based on the loop flow transient, the nuclear power following reactor trip, and to determine the peak pressure. The thermal behavior of the fuel located at the core hot spot is investigated by using the LYNXT code (Reference 64) and the statistical core design methodology of BAW-10170 (Reference 57a).

At the beginning of the postulated locked rotor accident, i.e., at the time the shaft in one of the reactor coolant pumps is assumed to seize, the plant is assumed to be in operation under the nominal steady-state conditions, i.e., 102% steady state power level, steady state pressure and steady state coolant average temperature. The DNB calculations are performed according to a statistical core design methodology that incorporates calibration and measurement uncertainties. Consequently, nominal conditions are adequate for transient analysis. Only the primary safety valves are allowed to maintain the primary pressure in the transient, thus maximizing the peak primary pressures. The pressure response is shown in Figure 15.4.4-4. For the DNB calculations, the pressure is assumed constant at the initial value. To maximize the power response during the event, the least negative Doppler power coefficient and +7.0 pcm/F moderator coefficient are assumed.

Evaluation of the Pressure Transient

After pump seizure, reactor coolant system flow is reduced and the system heats up and pressurizes. A reactor trip occurs as a consequence of low flow. The neutron flux is rapidly reduced by control rod insertion. Loss of off-site power is assumed to occur simultaneously with the reactor trip.

No credit is taken for the pressure reducing effect of pressurizer relief valves, pressurizer spray, steam dump or controlled feedwater flow after the plant trip. Although these operations are expected to occur and would result in a lower peak pressure, an additional degree of conservatism is provided by ignoring their effect. The pressurizer safety valves are actuated at 2500 psia and their capacity for relief is as stated in Section 5.2.2.

Evaluation of the Effects of DNB in the Core During the Accident

The minimum DNBR calculated in the hot channel for this event is less than the DNBR limit of 1.5. Consequently, a clad temperature excursion of short duration is predicted. Less than 10% of the fuel pins could experience DNB during the accident.

Locked Rotor Results

Table 15.4.4-1 gives a summary of the results for the transient analysis of the reactor coolant pump locked rotor event. Transient values of pressurizer pressure, reactor vessel flow coastdown, nuclear power and thermal power are shown in Figures 15.4.4-1 through 15.4.4-5.

15.4.4.3 Conclusions

1. Since the peak RCS pressure reached during any of the transients is less than that which would cause stresses to exceed the faulted condition stress limits, the integrity of the primary coolant system is not endangered.

2. Since the peak fuel temperature is well below the 5080°F fuel temperature limit and the peak cladding temperature is well below the 1800°F cladding temperature limit, the core will remain intact with no consequential loss of core cooling capability. Typically, for the purpose of dose calculations, all pins that experience DNB are assumed to fail. The evaluation of DNB effects for this accident showed that less than 10% of the fuel pins experience DNB. This is bounded by the conclusions presented in Section 15.5.3.

The Single Reactor Coolant Pump Locked Rotor event has been evaluated with respect to the CENP-Westinghouse steam generator replacement at Sequoyah Unit 1 and Unit 2. The evaluation concludes that the parameters important to the consequences of this event are not adversely affected by the RSG.

15.4.5 Fuel Handling Accident

15.4.5.1 Identification of Causes and Accident Description

Refer to Subsection 15.5.6.

15.4.5.2 Analysis of Effects and Consequences

For the analysis and consequences of the postulated fuel handling accident, refer to Subsection 15.5.6.

15.4.6 Rupture Of a Control Rod Drive Mechanism Housing (Rod Cluster Control Assembly Ejection)

15.4.6.1 Identification of Causes and Accident Description

This accident is defined as the mechanical failure of a control rod mechanism pressure housing resulting in the ejection of a rod cluster control assembly and drive shaft. The consequence of this mechanical failure is a rapid reactivity insertion together with an adverse core power distribution, possibly leading to localized fuel rod damage.

Design Precautions and Protection

Certain features in the Sequoyah Nuclear Plant pressurized water reactor are intended to preclude the possibility of a rod ejection accident, or to limit the consequences if the accident were to occur. These include a sound, conservative mechanical design of the rod housings, together with a thorough quality control (testing) program during assembly, and a nuclear design which lessens the potential ejection worth of rod cluster control assemblies and minimizes the number of assemblies inserted at power.

Mechanical Design

The mechanical design is discussed in Section 4.2. Mechanical design and quality control procedures intended to preclude the possibility of rod cluster control assembly drive mechanism housing failure sufficient to allow a rod cluster control assembly to be rapidly ejected from core are listed below:

1. Each full length control rod drive mechanism housing is completely assembled and shop tested at 4100 psi.

2. The mechanism housings are individually hydrotested as they are attached to the head adapters in the reactor vessel head, and checked during the hydrotest of the completed RCS.

3. Stress levels in the mechanism are not affected by anticipated system transients at power, or by the thermal movement of the coolant loops. Moments induced by the design earthquake can be accepted within the allowable primary working stress range specified by the ASME Code, Section III, for Class 1 components.

4. The latch mechanism housing and rod travel housing are each a single length of forged Type-304 stainless steel. This material exhibits excellent notch toughness at all temperatures which will be encountered.

A significant margin of strength in the elastic range together with the large energy absorption capability in the plastic range gives additional assurance that gross failure of the housing will not occur. The joints between the latch mechanism housing and head adapter, and between the latch mechanism housing and rod travel housing, are threaded joints reinforced by canopy seal welds. These welds are inspected in accordance with the plant's Inservice Inspection Program (Section 5.2.8) and a discussion on non-welding repair is provided in FSAR Section 4.2.3.2.2.

Nuclear Design

Even if a rupture of a rod cluster control assembly drive mechanism housing is postulated, the operation of a plant utilizing chemical shim is such that the severity of an ejected rod cluster control assembly is inherently limited. In general, the reactor is operated with the rod cluster control changes caused by core depletion and xenon transients are compensated by boron changes.

Further, the location and grouping of control rod banks are selected during the nuclear design to lessen the severity of a rod cluster control assembly ejection accident. Therefore, should a rod cluster control assembly be ejected from its normal position during high power operation, only a minor reactivity excursion, at worst, could be expected to occur.

However, it may be occasionally desirable to operate with larger than normal insertions. For this reason, a rod insertion limit is defined as a function of power level. Operation with the rod cluster control assemblies above this limit guarantees shutdown capability and acceptable power distribution. The position of all rod cluster control assemblies is continuously indicated in the control room. An alarm will occur if a bank of rod cluster control assemblies approaches its insertion limit or if one assembly deviates from its bank. There are low and low-low control bank rod insertion alarms with visual and audio signals. The control bank rod insertion alarms alert operators to take action to restore margin.

Reactor Protection

The reactor protection in the event of a rod ejection accident has been described in Reference 26. The protection for this accident is provided by the power range high neutron flux trip (high and low setting) and high rate of neutron flux increase trip. These protection functions are described in detail in Section 7.2.

Effects on Adjacent Housings

Disregarding the remote possibility of the occurrence of a rod cluster control assembly mechanism housing failure, investigations have shown that failure of a housing due to either longitudinal or circumferential cracking is not expected to cause damage to adjacent housings leading to increased severity of the initial accident.

Limiting Criteria

Due to the extremely low probability of a rod cluster control assembly ejection accident, limited fuel damage is considered an acceptable consequence.

Comprehensive studies of the threshold of fuel failure and of the threshold of significant conversion of the fuel thermal energy to mechanical energy, have been carried out as part of the SPERT project by the Idaho Nuclear Corporation (Reference 27). Extensive tests of UO_2 zirconium clad fuel rods representative of those in Pressurized Water Reactor type cores have demonstrated failure thresholds in the range of 240 to 257 cal/gm. However, other rods of a slightly different design have exhibited failures as low as 225 cal/gm. These results differ significantly from the TREAT (Reference 28) results, which indicted that this threshold decreases by about 10% with fuel burnup. The clad failure mechanism appears to be melting for zero burnup rods and brittle fracture for irradiated rods. Also important is the conversion ratio of thermal to mechanical energy. This ratio becomes marginally detectable above 300 cal/gm for unirradiated rods and 200 cal/gm for irradiated rods; catastrophic failure, (large fuel dispersal, large pressure rise) even for irradiated rods, did not occur below 300 cal/gm.

In view of the above experimental results, conservative criteria are applied to ensure that there is little or no possibility of fuel dispersal in the coolant, gross lattice distortion, or severe shock waves. These criteria are:

1. Average fuel pellet enthalpy at the hot spot below 225 cal/gm for uniradiated fuel and 200 cal/gm for irradiated fuel.

2. Peak reactor coolant pressure less than that which would cause stresses to exceed the faulted condition stress limits.

3. Fuel melting will be limited to less than 10% of the fuel volume at the hot spot even if the average fuel pellet enthalpy is below the limits of criterion (1) above.

15.4.6.2 Analysis of Effects and Consequences

Method of Analysis

The analysis of the RCCA ejection accident is performed in two stages, first an average core nuclear power transient calculation and then a hot spot heat transfer calculation. The average core calculation is performed using spatial neutron kinetics methods to determine the average power generation with time including the various total core feedback effects, i.e., Doppler reactivity and moderator reactivity. Enthalpy and temperature transients in the hot spot are then determined by multiplying the average core energy generation by the hot channel factor and performing a fuel rod transient heat transfer calculation. The power distribution calculated without feedback is pessimistically assumed to persist throughout the transient.

A detailed discussion of the method of analysis can be found in Reference 29.

Average Core Analysis

The spatial kinetics computer code, TWINKLE (Reference 30), is used for the average core transient analysis. This code uses cross sections generated by LEOPARD (Reference 31) to solve the two group neutron diffusion theory kinetic equations in one, two or three spatial dimensions (rectangular coordinates) for six delayed neutron groups and up to 2000 spatial points. The computer code includes a detailed multiregion, transient fuel-clad-coolant heat transfer model for calculation pointwise Doppler and moderator feedback effects. In this analysis, the code is used as a one dimensional axial kinetics code since it allows a more realistic representation of the special effects of axial moderator feedback and rod cluster control assembly movement and the elimination of axial feedback weighting factors. However, since the radial dimension is missing, it is still necessary to employ very conservative methods (described below) of calculating the ejected rod worth and hot channel factor. Further description of TWINKLE appears in Subsection 15.1.9.

Hot Spot Analysis

The average core energy addition, calculated as described above, is multiplied by the appropriate hot channel factors, and the hot spot analysis is performed using the detailed fuel and clad transient heat transfer computer code, FACTRAN (Reference 25). This computer code calculates the transient temperature distribution in a cross section of a metal clad UO_2 fuel rod, and the heat flux at the surface of the rod, using as input the nuclear power versus time and the local coolant conditions. The zirconium-water reaction is explicitly represented, and all material properties are represented as functions of temperature. A parabolic radial power generation is used within the fuel rod.

FACTRAN uses the Dittus-Boelter or Jens-Lottes correlation to determine the film heat transfer before DNB, and the Bishop-Sandburg-Tong correlation (Reference 32) to determine the film boiling coefficient after DNB. The DNB heat flux is not calculated, instead the code is forced into DNB by

specifying a conservative DNB heat flux. The gap heat transfer coefficient can be calculated by the code; however, it is adjusted in order to force the full power steady state temperature distribution to agree with that predicted by design fuel heat transfer codes presently used by Westinghouse.

For full power cases, the design initial hot channel factor (F_QT) is input to the code. The hot channel factor during the transient is assumed to increase from the steady state design value to the maximum transient value in 0.1 seconds, and remain at the maximum for the duration of the transient. This is conservative, since detailed spatial kinetics models show that the hot channel factor decreases shortly after the nuclear power peak due to power flattening caused by preferential feedback in the hot channel (Reference 29). Further description of FACTRAN appears in Subsection 15.1.9.

System Overpressure Analysis

Because safety limits for fuel damage specified earlier are not exceeded, there is little likelihood of fuel dispersal into the coolant. The pressure surge may therefore be calculated on the basis of conventional heat transfer from the fuel and prompt heat generation in the coolant.

The pressure surge is calculated by first performing the fuel heat transfer calculation to determine the average and hot spot heat flux versus time. Using this heat flux data, a THINC calculation is conducted to determine the volume surge. Finally, the volume surge is simulated in a plant transient computer code. This code calculates the pressure transient taking into account fluid transport in the system, and heat transfer to the steam generators. No credit is taken for the possible pressure reduction caused by the assumed failure of the control rod pressure housing.

Calculation of Basic Parameters

Input parameters for the analysis are conservatively selected on the basis of calculated values for this type of core. The more important parameters are discussed below. Table 15.4.6-1 presents the parameters used in this analysis.

Ejected Rod Worths and Hot Channel Factors

The values for ejected rod worths and hot channel factors are calculated using a synthesis of one dimensional and two dimensional calculations. Standard nuclear design codes are used in the analysis. No credit is taken for the flux flattening effects of reactivity feedback. The calculation is performed for the maximum allowed bank insertion at a given power level, as determined by the rod insertion limits. Adverse Xenon distributions and part length rod positions are considered in the calculations.

The total transient hot channel factors F_qT, is then obtained by combining the axial and radial factors.

Appropriate margins are added to the results to allow for calculational uncertainties, including an allowance for nuclear power peaking due to fuel densification.

Reactivity Feedback Weighting Factors

The largest temperature rises, and hence the largest reactivity feedbacks occur in channels where the power is higher than average. Since the weight of a region is dependent on flux, these regions have high weights. This means that the reactivity feedback is larger than that indicated by a simple

single channel analysis. Physics calculations were carried out for temperature changes with a flat temperature distribution, and with a large number of axial and radial temperature distributions. Reactivity changes were compared and effective weighting factors determined. These weighting factors take the form of multipliers which when applied to single channel feedbacks correct them to effective whole core feedbacks for the appropriate flux shape. In this analysis, since a one dimensional (axial) spatial kinetics method is employed, axial weighting is not used. In addition, no weighting is applied to the moderator feedback. A conservative radial weighting factor is applied to the transient fuel temperature to obtain an effective fuel temperature as a function of time accounting for the missing spatial dimension. These weighting factors were shown to be conservative compared to three dimensional analysis (Reference 29).

Moderator and Doppler Coefficient

The critical boron concentrations at the beginning of life and end of life were adjusted in the nuclear code in order to obtain moderator density coefficient curves which are conservative compared to actual design conditions for the plant. As discussed above, no weighting factor is applied to these results.

The Doppler reactivity defect is determined as a function of power level using the one dimensional steady state computer code with a Doppler weighting factor of 1.0. The resulting curve is conservative compared to design predictions for this plant. The Doppler weighting factor should be larger than 1.0 (approximately 1.3), just to make the present calculation agree with design predictions before ejection. This weighting factor will increase under accident conditions, as discussed above. The transient weighting factor used in the analysis is presented in Table 15.4.6-1.

Delayed Neutron Fraction, β

Calculations of the effective delayed neutron fraction (β_{eff}) typically yield values of 0.70% at beginning of life and 0.50% at end of life for the first cycle. The accident is sensitive to the ejected rod when its worth is nearly equal to or greater than β_{eff} as in zero power transients. In order to allow for future fuel cycles, pessimistic estimates were used in the analysis (0.55% at beginning of cycle and 0.45% β_{eff} at end of cycle).

Trip Reactivity Insertion

The trip reactivity insertion is assumed to be 4% from hot full power and 2% from hot zero power including the effect of one stuck rod. These values are reduced by the ejected rod reactivity. The shutdown reactivity was simulated by dropping a rod of the required worth into the core. The start of rod motion occurred 0.5 seconds after the high neutron flux trip point is reached. This delay is assumed to consist of 0.2 seconds for the instrument channel to produce a signal, 0.15 seconds for the trip breaker to open and 0.15 seconds for the coil to release the rods. The curve of rod insertion versus time which was used is shown in Figure 15.1.5-1. The time to full insertion assumed together with the 0.5 second delay overestimates the time for significant insertion of shutdown reactivity into the core. This is particularly important conservatism for hot full power accidents.

Results

The values of the parameters used in the analysis, as well as the results of the analysis, are presented in Table 15.4.6-1 and discussed below.

Beginning of Cycle, Full Power

Control bank D was assumed to be inserted to its insertion limit. The worst ejected rod worth and hot channel factor were 0.20% ΔK/K and 7.11 respectively. The peak hot spot fuel center temperature reached the beginning of life melt temperature of 4900°F. However, melting was restricted to less than 10% of the pellet.

Beginning of Cycle, Zero Power

For this condition, control bank D was assumed to be fully inserted and C was at its insertion limit. The worst ejected rod is located in control bank D and has a worth of 0.75% Δk/k and a hot channel factor of 14.05.

End of Cycle, Full Power

Control bank D was assumed to be inserted to its insertion limit. The ejected rod worth and hot channel factors were 0.21% Δk/k and 7.88 respectively. The peak hot spot fuel temperature exceeded the end of life melt temperature of 4800°F. However, melting was restricted to less than 10% of the pellet. The variation in melt temperature with burnup is discussed in Paragraph 4.4.1.2.

End of Cycle, Zero Power

Original analysis - The ejected rod worth and hot channel factor for this case were obtained assuming control bank D to be fully inserted and bank C at its insertion limit. The results were 1.01% Δk and 22.2, respectively. The peak fuel center temperature was 4203°F.

Reanalysis - This transient was reanalyzed in Reference 65 to address an increase in the Cycle 8 ejected rod hot channel factor. The reanalysis was performed consistent with the original analysis except that the bounding Cycle 8 values of 0.91%Δk for ejected rod worth and 24.8 for the hot channel factor were assumed. The results of the reanalysis were bounded by the original analysis.

A summary of the cases presented above is given in Table 15.4.6-1. The nuclear power and fuel clad temperature transients for the worst case in terms of fuel melt (EOL full power) are presented in Figures 15.4.6-1 and 15.4.6-2. The same transients for the worst case in terms of clad temperature (EOL zero power) are presented in Figures 15.4.6-3 and 15.4.6-4.

Fission Product Release

It is assumed that fission products are released from the gaps of all rods having a DNBR of less than the safety analysis limit. In all cases considered, less than 10% of the rods entered DNB based on a detailed 3 dimensional THINC analysis. Although limited fuel melting at the hot spot was predicted for the full power cases, in practice melting is not expected since the analysis conservatively assumed that the hot spots before and after ejection were coincident.

Pressure Surge

A detailed calculation of the pressure surge for an ejection worth 1 dollar at BOL, hot full power, indicates that the peak pressure does not exceed that which would cause stress to exceed the faulted condition stress limits (Reference 29). Since the severity of the present analysis does not exceed this "worst case" analysis, the accident for this plant will not result in an excessive pressure rise or further damage to the RCS.

Lattice Deformations

A large temperature gradient will exist in the region of the hot spot. Since the fuel rods are free to move in the vertical direction, differential expansion between separate rods cannot produce distortion. However, the temperature gradients across individual rods may produce a force tending to bow the midpoint of the rods toward the hot spot. Physics calculations indicate that the net result of this would be a negative reactivity insertion. In practice, no significant bowing is anticipated, since the structural rigidity of the core is more than sufficient to withstand the forces produced. Boiling in the hot spot region would produce a net flow away from that region. However, the heat from the fuel is released to the water relatively slowly, and it is considered inconceivable that cross flow will be sufficient to produce significant lattice forces. Even if massive and rapid boiling, sufficient to distort the lattice, is hypothetically postulated, the large void fraction in the hot spot region would produce a reduction in the total core moderator to fuel ration, and a large reduction in this ratio at the hot spot. The net effect would therefore be a negative feedback. it can be concluded that no conceivable mechanism exists for a net positive feedback resulting from lattice deformation. In fact, a small negative feedback may result. The effect conservatively ignored in the analyses.

15.4.6.3 Conclusions

Even on a pessimistic basis, the analyses indicate that the described fuel and clad limits are not exceeded. It is concluded that there is no danger of sudden fuel dispersal into the coolant. Since the peak pressure does not exceed that which would cause stresses to exceed the faulted condition stress limits, it is concluded that there is no danger of further consequential damage to the primary system. The analyses have demonstrated that upper limit in fission product release as a result of a number of fuel rods entering DNB amounts to 10%.

The rupture of a Control Rod Drive Mechanism Housing event has been evaluated with respect to the CENP-Westinghouse steam generator replacement at Sequoyah Unit 1 and Unit 2. The evaluation concludes that the parameters important to the consequences of this event are not adversely affected by the RSG.

15.4.7 References

1. "Acceptance Criteria for Emergency Core Cooling Systems for Light Water Cooled Nuclear Power Reactors," 10 CFR 50.46 and Appendix K of 10 CFR 50.

2. Deleted by Amendment 21

3. Deleted by Amendment 21

4. Deleted by Amendment 21

5. Deleted by Amendment 21

6. Deleted by Amendment 8

7. Deleted by Amendment 8

8. Deleted by Amendment 21

9. Deleted by Amendment 21

10. Deleted by Amendment 21

11. Deleted by Amendment 8.

12. Deleted by Amendment 21

13. Deleted by Amendment 21

14. Deleted by Amendment 21

15. Deleted by Amendment 21

16. Deleted by Amendment 21

17. Deleted by Amendment 21

18. Deleted by Amendment 21

19. Deleted by Amendment 21

20. Deleted by Amendment 21

21. Deleted by Amendment 21

22. F. S. Moody, Transactions of the ASME, Journal of Heat Transfer, February 1965, Figure 3, page 134.

23. Deleted by Amendment 21

24. Deleted by Amendment 21

25. Hargrove, H. G., "FACTRAN - A Fortran IV Code for Thermal Transients in a UO_2 Fuel Rod," WCAP-7908-A, December 1989.

26. T. W. T. Burnett, "Reactor Protection System Diversity in Westinghouse Pressurized Water Reactor," WCAP-7306, April, 1969.

27. T. G. Taxelius, ed., "Annual Report - Spert Project, October 1968 September 1969," Idaho Nuclear Corporation IN-1370, June, 1970.

28. R. C. Liimatainen, and F. J. Testa, "Studies in TREAT of Zircaloy-2-Clad, UO_2-Core Simulated Fuel Elements," ANL-7225, January - June 1966, p. 177, November 1966.

29. D. H. Risher, Jr., "An Evaluation of the Rod Ejection Accident in Westinghouse Pressurized Water Reactors Using Spatial Kinetics Methods," WCAP-7588, Revision 1-A, January 1975.

30. D. H. Risher, Jr., R. F. Barry, "TWINKLE - A Multi-Dimensional Neutron Kinetics Computer Code," WCAP-7979-P-A (Proprietary), WCAP-8028-A (Non-Proprietary), January 1975.

31. R. F. Barry, "LEOPARD - A Spectrum Dependent Non-Spatial Depletion Code for the IBM-7094," WCAP 3269-26, September 1963.

32. A. A. Bishop, R. O. Sandberg, and L. S. Tong, "Forced Convection Heat Transfer at High Pressure After the Critical Heat Flux," ASME-65-HT-31, August 1965.

33. Deleted by Amendment 21

34. Deleted by Amendment 21

35. Deleted by Amendment 21

36. Deleted by Amendment 21

37. Deleted by Amendment 21

38. Deleted by Amendment 8.

39. Deleted by Amendment 8.

40. J. J. DiNunno, F. D. Anderson, R. E. Baker, and R. L. Waterfield, "Calculation of Distance Factors for Power and Test Reactor Sites," TID-14844, March 1962.

41. W. K.Brunot, et al., "Control of the Hydrogen concentration Following a Loss-of-Coolant Accident by Containment Venting for the H. B. Robinson Plant," WCAP-7372, November 1969.

42. Deleted by Amendment 20

43. W. B. Cottrell, "ORNL Nuclear Safety Research and Development Program Bi-Monthly Report for July - August 1968, "ORNL-TM-2368, Nov. 1968.

44. Deleted by Amendment 20

45. Deleted by Amendment 20

46. H. E. Zittel, and T. H. Row, "Radiation and Thermal Stability of Spray Solutions," Nuclear Technology 10, 436-443, (1971).

47. A. O. Allen, "The Radiation Chemistry of Water and Aqueous Solutions," Princeton, N. J., Van Nostrand, 1961.

48. Deleted by Amendment 21

49. Deleted by Amendment 21

50. Deleted by Amendment 20

51. "Sequoyah Units 1 and 2 Steam Generator Tube Plugging LOCA Sensitivity Analysis," Westinghouse Letter TVA-97-115, October 20, 1997.

52. Deleted by Amendment 9

53. L. E. Erin, et al., "Summary Report Process Protection System Eagle 21 Upgrade, RTD Be, NSLB, MSS. EAM and TTD Implementation Sequoyah Units 1 and 2," WCAP-12504 (proprietary), WCAP-12548 (Non-Proprietary), March 1990.

54. Reference deleted by Amendment 12.

55. DeVault, R.D., Smith, J.D., Studer, P.G., "MONSTER - A Multicompartment Containment System Analysis Program User Manual," System I.O. 262303, March 1993.

56. S. A. Barnes, "Primary Containment Pressure Response Due to a Main Feedwater Line Break," SQNAPS2-128, July 1993.

57. SQN MFLBs Inside MSVVs 10CFR50.59 Evaluation (FSAR Change Request 12-31) RIMS Number B38 960419 800.

57a. Deleted by Amendment 20

58. BAW-10170, "Statistical Core Design for Mixing Vane Cores," December 1988.

59. BAW-10168-A, R03, "BWNT Loss-of-Coolant Accident Evaluation Model for Recirculating Steam Generator Plants," November 1993.

60. BAW-10164, R06, "RELAP5/MOD2-B&W, An Advanced Computer Program for LOCA and Non-LOCA Transient Analysis," June 2007.

61. Deleted by Amendment 21

62. Deleted by Amendment 21

63. BAW-10180, R01, "NEMO -- Nodal Expansion Method Optimized," March 1993.

64. BAW-10156, R01, "LYNXT-Core Transient Thermal Hydraulic Program," August 1993.

65. Gergos, B. W. “Sequoyah Unit 1 Cycle 8 Reload Safety Evaluation Revision 1,” September 1995.

66. Document No. 77-5016198, “Framatome ANP, Replacement Steam Generator Report for Sequoyah Unit 1.”

67. Topical Report No. EMF-2103 (P)(A) Revision 0, "Realistic Large Break LOCA Methodology," April 2003.

68. NUREG/CR-5249, EGG-2552, "Quantifying Reactor Safety Margins," Technical Program Group, October 1989.

69. XN-CC-39 (P)(A) Revision 1, "ICECON: A Computer Program for Predicting Containment Back Pressure for LOCA Analysis (Including Ice Condenser Plants)," Exxon Nuclear Company, October 1978.

70. TID-4500, ANCR-1219, "CONTEMPT-LT: A Computer Program for Predicting Containment Pressure Temperature Response to a Loss-Of-Coolant-Accident," Aerojet Nuclear Company, June 1975.

71. NUREG-0800 Revision 2, "Standard Review Plan," U.S. Nuclear Regulatory Commission, Chapter 6 "Engineered Safety Features," Branch Technical Position 6-1 "Minimum Containment Pressure Model for PWR ECCS Performance Evaluation," June 1987.

72. Document No. 51-9076350-000, “SQN Non-LOCA Disposition of Events for ECCS Flow Modification.”

73. Document No. 77-9142036, AREVA NP, “Replacement Steam Generator Report for TVA Sequoyah Unit 2.”

TABLE 15.4.1-1 (Sheet 1)

PLANT OPERATING RANGE SUPPORTED BY THE REALISTIC LARGE BREAK LOCA ANALYSIS

Plant Physical Description

Fuel	
Cladding Outside Diameter	0.374 in.
Cladding Inside Diameter	0.326 in.
Cladding Thickness	0.024 in.
Pellet Outside Diameter	0.3195 in.
Pellet Density	96 percent of theoretical
Active Fuel Length	144 in.
Gd_2O_3 Concentrations	2, 4, 6, 8, w/o
Reactor Coolant System	
Flow Resistance	Calculated by Model
Pressurizer Location	Faulted Loop
Hot Assembly Location	Any Core Location
Hot Assembly Type	17 x 17
SG Tube Plugging	≤15 percent

Plant Initial Operating Conditions

Reactor	
Nominal Power	3455 MWt
Initial Power	3479 MWt[1]
Peaking Factor (F_q)	≤ 2.65[2]
Hot Channel Factor ($F_{\Delta H}$)	≤ 1.706[3]
Moderator Temperature Coefficient	≤ 0 at Hot Full Power
Fluid Conditions	
Loop Flow	131.6 Mlbm/hr ≤ M ≤ 152.8 Mlbm/Hr
RCS Average Temperature	578.2ºF ≤ T ≤ 583ºF
Upper Head Temperature	Tcold Temperature[4]
Pressurizer Pressure	1859.7 psia ≤ P ≤ 2459.7 psia
Pressurizer Level	57 percent ≤ L ≤ 95 percent
Accumulator Pressure	614.7 psia ≤ P ≤ 697.7 psia
Accumulator Volume	1004.6 ft^3 ≤ V ≤ 1095.4 ft^3
Accumulator Temperature	95ºF ≤ T ≤ 130ºF
Accumulator Flow Resistance (fl/D)	Calculated by Model
Minimum ECCS Boron Concentration	≥ 2400 ppm

Notes -

1. Includes uncertainties.
2. Ensure that a minimum 7 percent peaking margin is maintained to the F_q limits when operating at the positive or negative AFD limit.
3. Includes 4 percent measurement uncertainty.
4. Upper head temperature will change based on sampling of RCS temperature.

TABLE 15.4.1-1 (Sheet 2)

PLANT OPERATING RANGE SUPPORTED BY THE REALISTIC LARGE BREAK LOCA ANALYSIS

Accident Boundary Conditions

Break Location	Any RCS piping location
Break Type	Double-ended guillotine or split
Break Size	0.33 ≤ A ≤ 1.0 full pipe area (split)
	0.33 ≤ A ≤ 1.0 full pipe area (guillotine)
Single Failure	Loss of one train of ECCS
Offsite Power	Both available and not available
Charging Pump Flow	Minimum Safeguards
Safety Injection Pump Flow	Minimum Safeguards
Residual Heat Removal Pump Flow	Minimum Safeguards
ECCS Injection Temperature	120ºF
Charging Pump Delay	37 sec. (w/ off-site power)
	37 sec. (w/o off-site power)
Safety Injection Pump Delay	37 sec. (w/ off-site power)
	37 sec. (w/o off-site power)
Residual Heat Removal Pump Delay	37 sec. (w/ off-site power)
	37 sec. (w/o off-site power)
Containment Pressure	14.3 psia, nominal value
Upper Compartment Temperature	80ºF ≤ T ≤ 110ºF
Lower Compartment Temperature	95ºF ≤ T ≤ 130ºF
Containment Spray Delay	8 sec.
Containment Spray Temperature	55ºF

TABLE 15.4.1-2

REALISTIC LARGE BREAK LOCA TIME SEQUENCE OF EVENTS

Event	Time (s)
Break Opened	0.00
RCP Trip	N/A[1]
Safety Injection Signal	0.0
Accumulator Injection (Faulted Loop)	9.5
Accumulator Injection (Intact Loops)	12.1
Start of Charging Flow	37.0
SI/RHR Flow Delivery Begins (All Loops)	37.0
Start of Core Reflood	48.2
All Accumulators Empty	83.8
Peak Cladding Temperature Occurs	265.9
Transient Analysis terminated	839.7

Notes -

1. Offsite power was available for the limiting case set.

Table 15.4.1-2a

Large Break LOCA Results

Case >>>>>>>>>>	**2-ft**	**4-ft**	**6-ft**	**8-ft**	**10-ft**
Parameter					
RV Liquid at EOB, cu ft	76.1	76.1	74.1	76.7	76.6
Rupture Elevation, ft	3.4	5.1	6.3	8.0	9.7
PCT Elevation, ft	4.6	4.6	6.9	6.9	8.6
PCT at Rupture, °F	1848	1902	1835	1954	1722
PCT, °F	2112	2080	2034	2115	2108
Oxide at Rupture Node, %	3.9	3.4	3.8	3.6	2.9
Oxide at PCT Node %	5.5	4.4	3.8	5.0	5.4
Whole Core Oxidation, %	0.77	0.67	0.66	0.68	0.70

TABLE 15.4.1-3a

REALISTIC LARGE BREAK LOCA RESULTS - BASE ANALYSIS

Fuel Assembly Cladding

Peak Temperature	1941ºF
Peak Temperature Time	265.9 seconds
Peak Temperature Elevation	10.043 ft

Metal-Water Reaction

Pre-transient Oxidation	0.7624 percent
Transient Oxidation Maximum	2.9906 percent
Total Oxidation Maximum	3.7530 percent
Total Whole-Core Oxidation	0.0982 percent

TABLE 15.4.1-3b

REALISTIC LARGE BREAK LOCA RESULTS - SRR EFFECTS

Fuel Assembly Cladding

Peak Temperature	1985ºF
Peak Temperature Time	85.5 seconds
Peak Temperature Elevation	9.615 ft

Metal-Water Reaction

Pre-transient Oxidation	---
Transient Oxidation Maximum	---
Total Oxidation Maximum	5.03 percent
Total Whole-Core Oxidation	0.0659 percent

TABLE 15.4.1-4

REALISTIC LARGE BREAK LOCA
ICE CONDENSER CONTAINMENT INITIAL AND BOUNDARY CONDITIONS

Containment Net Free Volume	
Upper Compartment	651,000 - 692,600 ft^3
Lower Compartment (minimum)	248,500 ft^3
Ice Condenser	181,400 ft^3
Dead Ended Compartments	129,900 ft^3
Initial Conditions	
Initial Mass of Ice	2.448×10^6 lbm
Containment Pressure (nominal)	14.3 psia
Upper Containment Temperature	80 °F -110 °F
Lower Containment Temperature	95 °F -130 °F
Humidity	100 percent
Containment Spray	
Maximum Total Flow	2 x 7700 = 15,400 gpm
Minimum Spray Temperature	55°F
Fastest Post-LOCA initiation of spray	10 sec (ramped to full flow between 8 and 10 s)
Containment Air Return Fans[1]	
Post-LOCA initiation	600 sec
Total Flow	120,000 cfm

Notes -

1. Due to the relatively late start of the recirculation fan, it is not modeled in this analysis.

TABLE 15.4.1-5

REALISTIC LARGE BREAK LOCA
PASSIVE STRUCTURAL HEAT SINKS IN CONTAINMENT

Heat Sink	Area ft^2	Thickness ft	Inside Radius ft	Thickness ft	Height ft	Material	Left Side	Right Side
Reactor Cavity Walls	6438	2.02				Concrete	Lower Comp.	Insulated
Concrete Floor	4444	2.00				Concrete	Lower Comp.	Insulated
Interior Concrete	8464	1.00				Concrete	Lower Comp.	Insulated
Reactor Vessel Biological Shield Wall			11	6.0	19.88	Concrete	Lower Comp.	Lower Comp.
Steel Lined Refueling Canal in LC			13.	0.02083	21.48	Stainless Steel	Lower Comp.	
				4.0	21.48	Concrete		Lower Comp.
Crane Wall between LC & DE			41.5	3.0	33.72	Concrete	Lower Comp.	Dead End
Crane Wall in LC			41.5	3.0	29.37	Concrete	Lower Comp.	Insulated
Crane Wall in UC			41.5	3.0	32.44	Concrete	Upper Comp.	Insulated
Refueling Canal in Contact with Upper and Lower Compartment	2551	0.02083				Stainless Steel	Upper Comp.	
		3,87				Concrete		Lower Comp.
Refueling Canal in Contact with Annular Region	1,260	0.02083				Stainless Steel	Upper Comp.	
		3.0				Concrete		Annulus
Concrete Structure between Upper and Lower Compartment	13,081	2.34				Concrete	Upper Comp.	Lower Comp.
Interior Concrete	2278	3.0				Concrete	Upper Comp.	Insulated
Containment Shell	24,646	0.05417				Carbon Steel	Upper Comp.	Annulus
LC Steel Heat Sink	24,999	0.03674				Carbon Steel	Lower Comp.	Insulated
UC Steel Heat Sink	11669	0.4229				Carbon Steel	Upper Comp.	Insulated
Dead-End Steel Heat Sink	8610	0.074375				Carbon Steel	DE Comp.	Insulated

Material Properties	Thermal Conductivity (BTU/hr-ft-°F)	Volumetric Heat Capacity (BTU/ft^3-°F)
Concrete	0.84	30.24
Carbon Steel	27.3	59.2
Stainless Steel	9.87	59.22

TABLE 15.4.1-9 (Sheet 1)

TIME SEQUENCE OF EVENTS FOR CONDITION IV EVENTS

Accident	Event	Time (Sec)
Major Secondary System Pipe Rupture		
1. Case a	Steam line ruptures	0.0
	SIS Low Steamline Pressure Setpoint Reached	0.6
	Steam line isolation occurs	8.6
	Feedwater isolation occurs	9.6
	Pressurizer empties	14.0
	Safety Injection Flow Initiated	28.6
	Boron Reaches the Core	36.1
	Criticality Attained	50.1
2. Case b	Steam Line Ruptures	0.0
	SIS Low Steamline Pressure Setpoint Reached	0.2
	Steam Line Isolation Occurs	8.2
	Feedwater Isolation Occurs	9.2
	Pressurizer Empties	16.0
	Safety Injection Flow Initiated	28.2
	Criticality Attained	32.1
	Boron Reaches The Core	36.1
3. Case c	Steam line ruptures	0.0
	SIS Low Steamline Pressure Setpoint Reached	0.6
	Steam line isolation occurs	8.6
	Feedwater isolation occurs	9.6
	Pressurizer empties	16.0
	Safety Injection Flow Initiated	58.6
	Criticality Attained	66.1
	Boron Reached the Core	72.1
4. Case d	Steam Line Ruptures	0.0
	SIS Low Steamline Pressure Setpoint Reached	0.2
	Steam Line Isolation Occurs	8.2
	Feedwater Isolation Occurs	9.2
	Pressurizer Empties	18.0
	Criticality Attained	40.1
	Safety Injection Flow Initiated	58.2
	Boron Reaches The Core	70.1

TABLE 15.4.1-9 (Sheet 2)

TIME SEQUENCE OF EVENTS FOR CONDITION IV EVENTS

Accident	Event	Time (Sec)
a. End of Cycle, Zero Power	RCCA ejected	0
	Reactor trip setpoint reached (High Neutron Flux, high setting	0.16
	Rods begin to drop	0.66
	Peak clad average temperature reached	1.42
	Peak fuel center temperature reached	2.79
b. End of Cycle, Full Power	RCCA ejected	0
	Reactor trip setpoint reached (High Neutron Flux, high setting)	0.05
	Rods begin to drop	0.55
	Peak clad average temperature reached	2.36
	Peak fuel center temperature reached	3.99
c. Beginning of Cycle, Full Power	RCCA ejected	0
	Reactor trip setpoint reached (High Neutron Flux, high setting)	0.05
	Rods begin to drop	0.55
	Peak clad average temperature reached	2.29
	Peak fuel center temperature reached	4.36

TABLE 15.4.1-9 (Sheet 3)

TIME SEQUENCE OF EVENTS FOR CONDITION IV EVENTS

Accident	Event	Time (Sec)
Major rupture of a Main Feedwater Pipe with off-site power available	Main feedline rupture occurs	0.0
	Low-Low steam generator level reactor trip	4.9
	Rods begin to drop	7.0*
	Auxiliary feedwater started	65.0
	Low steamline pressure signal	178.7
	Minimum reactor vessel level reached	198.0
	Primary system starts cooling down	>7000
Major Rupture of a Main Feedwater Pipe without offsite power	Main feedline rupture occurs	0.0
	Low-Low steam generator level reactor trip	4.9
	Rods begin to drop	7.0*
	Auxiliary feedwater started	65.0
	Low steamline pressure reached	137.6
	Minimum pressurizer level reached	194.0
	PORV opens	900.0
	Primary system starts cooling down	3680.0

*There are no trip delays imposed by the TTD system at power levels greater than 50%.

Table 15.4.1-12 (Sheet 1)

TIME SEQUENCE OF EVENTS FOR STEAM LINE BREAK

Accident	Event	Time (Sec)
Major Secondary System Pipe Rupture		
1. Case A	Steam line rupture	0.0
	Steam line isolation setpoint reached	2
	Steam line isolation occurs	10
	Feedwater isolation occurs	22
	Safety Injection Flow initiated	30
	Criticality attained	35
	Pressurizer empties	57
	Boron reaches the core	98
2. Case B	Steam line rupture	0.0
	Steam line isolation setpoint reached	2
	Steam line isolation occurs	10
	Feedwater isolation occurs	22
	Pressurizer empties	30
	Safety Injection Flow initiated	30
	Criticality attained	32
	Boron reaches the core	97

Table 15.4.1-12 (Sheet 2)
(continued)

TIME SEQUENCE OF EVENTS FOR STEAM LINE BREAK

Accident	Event	Time (Sec)
Major Secondary System Pipe Rupture		
3. Case C	Steam line rupture	0.0
	Steam line isolation setpoint reached	2
	Steam line isolation occurs	10
	Feedwater isolation occurs	22
	Pressurizer empties	35
	Criticality attained	53
	Safety Injection Flow initiated	60
	Boron reaches the core	125
4. Case D	Steam line rupture	0.0
	Steam line isolation set point reached	2
	Steam line isolation occurs	10
	Feedwater isolation occurs	22
	Pressurizer empties	43
	Criticality attained	48
	Safety Injection Flow initiated	60
	Boron reaches the core	127

Table 15.4.1-12 (Sheet 3)
(continued)

TIME SEQUENCE OF EVENTS FOR STEAM LINE BREAK

Accident	Event	Time (Sec)
Major Secondary System Pipe Rupture		
5. Case B (with RSGs)	Steam Line Ruptures	0.0
	Low Steam Line Pressure Signal	0.04
	Steam Line Isolation Occurs	8.05
	Feedwater Isolation Occurs	22.04
	Safety Injection Flow Initiated	44.30
	Boron Reaches the Core	~123.0
	Peak Power	124.04

Table 15.4.2-1

LIMITING CORE PARAMETERS USED IN STEAM LINE BREAK DNB ANALYSIS

Case	Inside break with power (case B) - Mark-BW Fuel	Inside break with power (case B) - Advanced W17 HTP Fuel
Reactor vessel inlet temperature	399.4 °F (Faulted SG Loop) 492.4 °F (Intact SG Loop)	393.2°F (Faulted SG Loop) 487.0°F (Intact SG Loop)
RCS pressure	742.3 psia	877.38 psia
RCS flow	106% (of nominal HZP)	9,737.24 lbm/sec (Faulted SG Loop) 28,447.92 lbm/sec (Intact SG Loop)
Average Heat flux	16.4% (of nominal)	14.222% (of nominal)

Table 15.4.4-1

Summary of Results for Locked Rotor Transient

Maximum reactor Coolant System Pressure (psia)	2581.4
Maximum Clad Temperature (F)	1104
Maximum Fuel Temperature (F)	3264

TABLE 15.4.6-1

PARAMETERS USED IN THE ANALYSIS OF THE ROD CLUSTER CONTROL ASSEMBLY EJECTION ACCIDENT

Time in Life	Beginning	Beginning	End	End#	End##
Power Level	102 pct	0 pct	102 pct	0 pct	0 pct
Ejected rod worth, %Δk/k	.20	.75	.21	1.01	0.91
Delayed neutron fraction, %	.55	.55	.44	0.45	0.45
Feedback reactivity weighting	1.3	2.4	1.6	3.55	3.55
Trip Reactivity, %Δk/k	4.0	2.0	4.0	2.0	2.0
F_q before rod ejection	2.62	--	2.62	--	--
F_q after rod ejection	7.11	14.05	7.88	22.2	24.8
Number of operational pumps	4	2	4	2	2
Max. fuel pellet average temperature, °F	4121	3156	4056	3760	3493
Max. fuel center temperature, °F	4971	3610	4879	4203	3940
Max. fuel stored energy, cal/gm	181	132	177	162	148.2

- Original
- Reanalysis

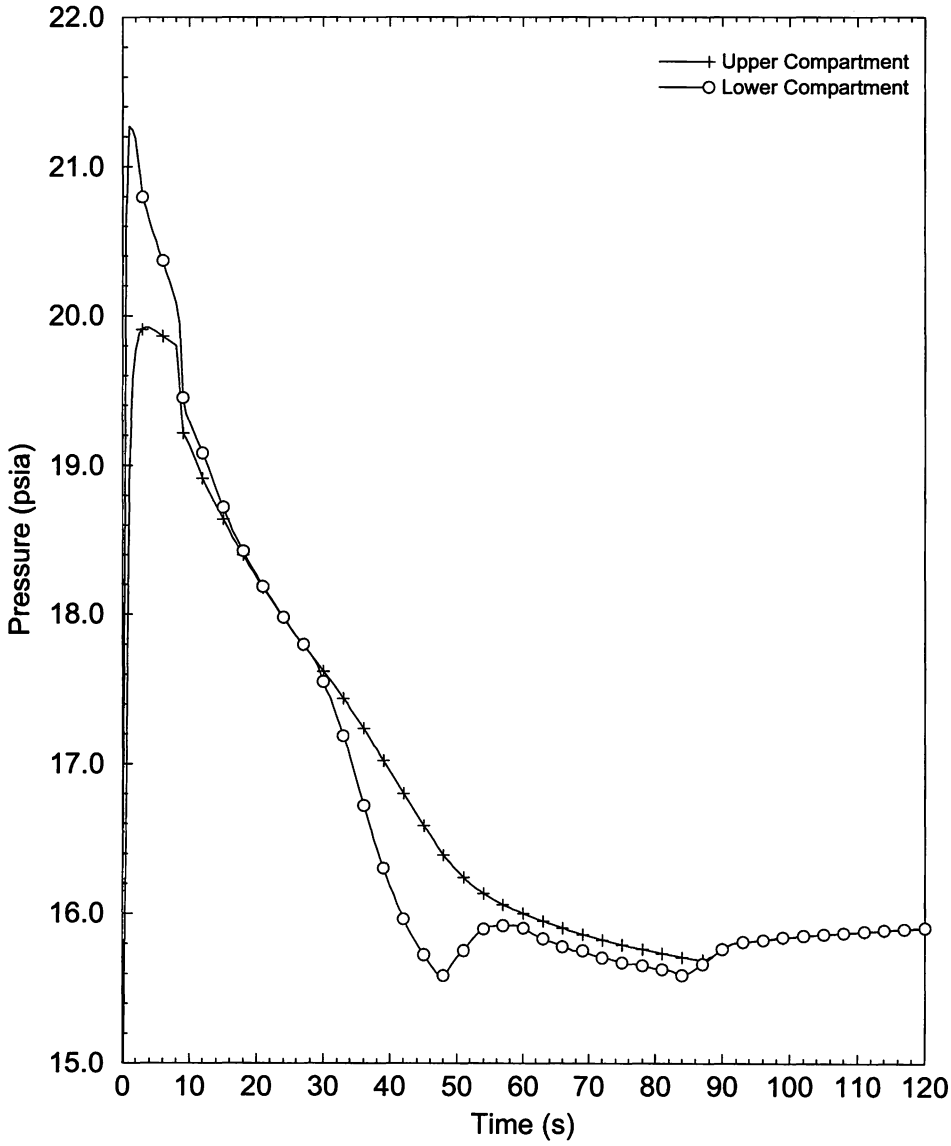

Figure 15.4.1-1
Realistic Large Break LOCA - Containment Compartment Pressure for the Limiting Case

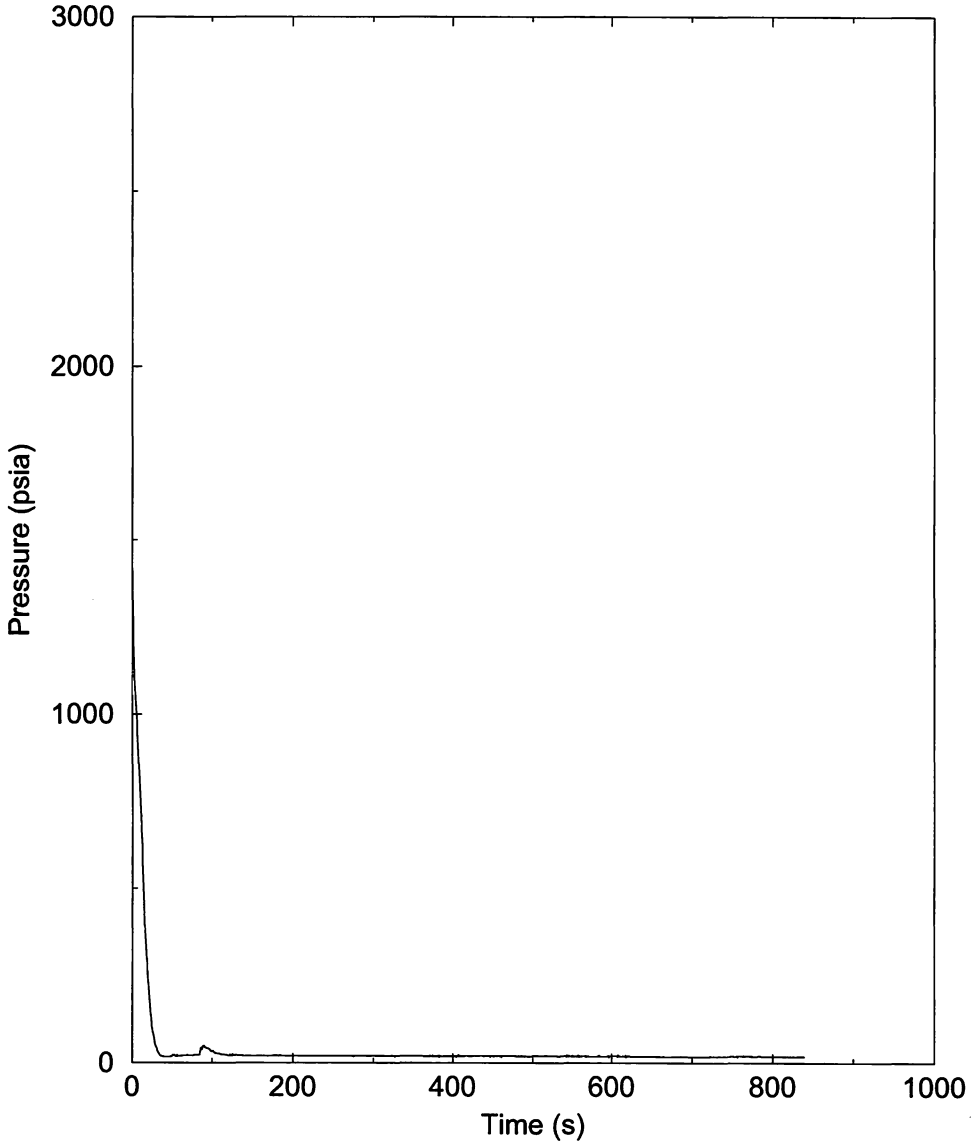

Figure 15.4.1-2
Realistic Large Break LOCA - Reactor Vessel Upper Plenum Pressure for the Limiting Case

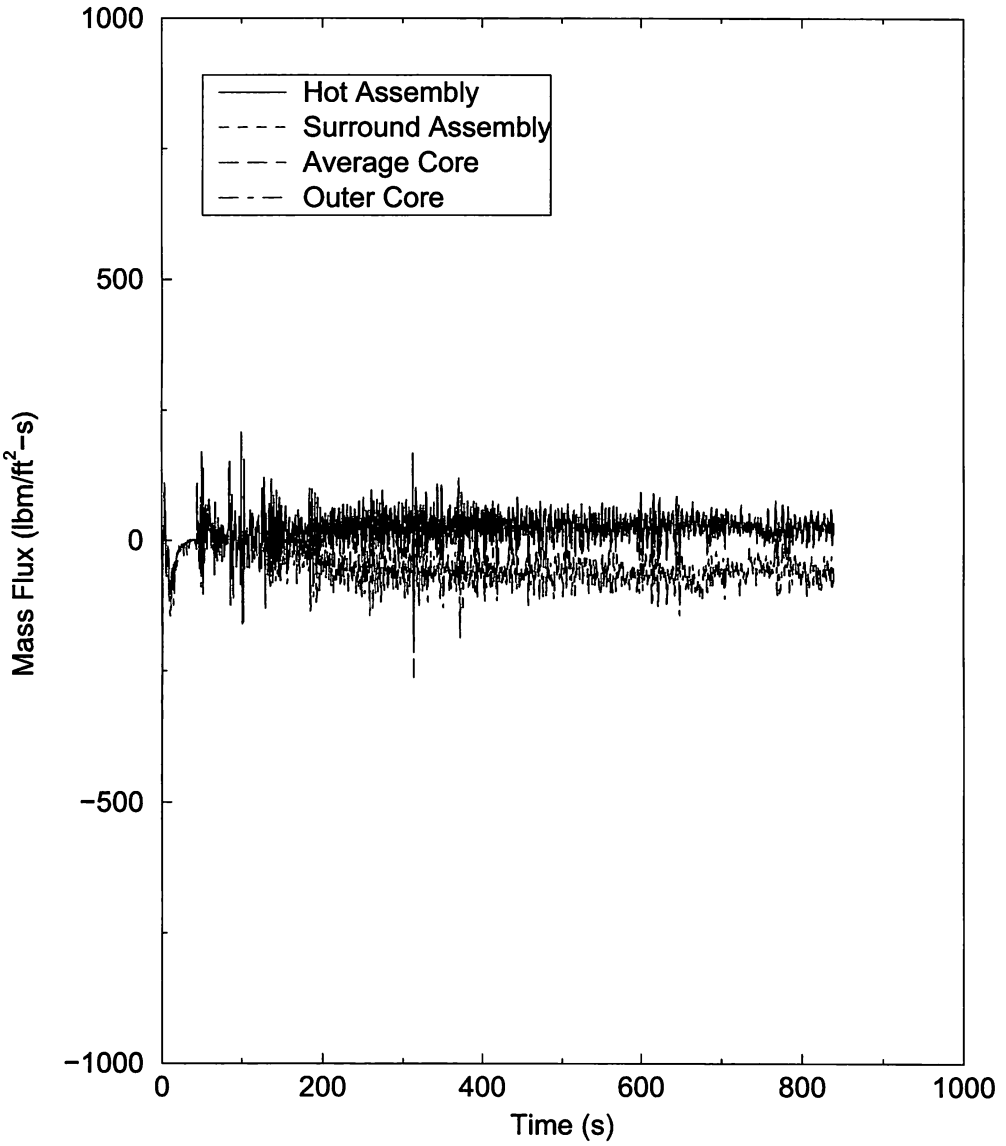

Figure 15.4.1-3
Realistic Large Break LOCA - Core Inlet Mass Flux for the Limiting Case

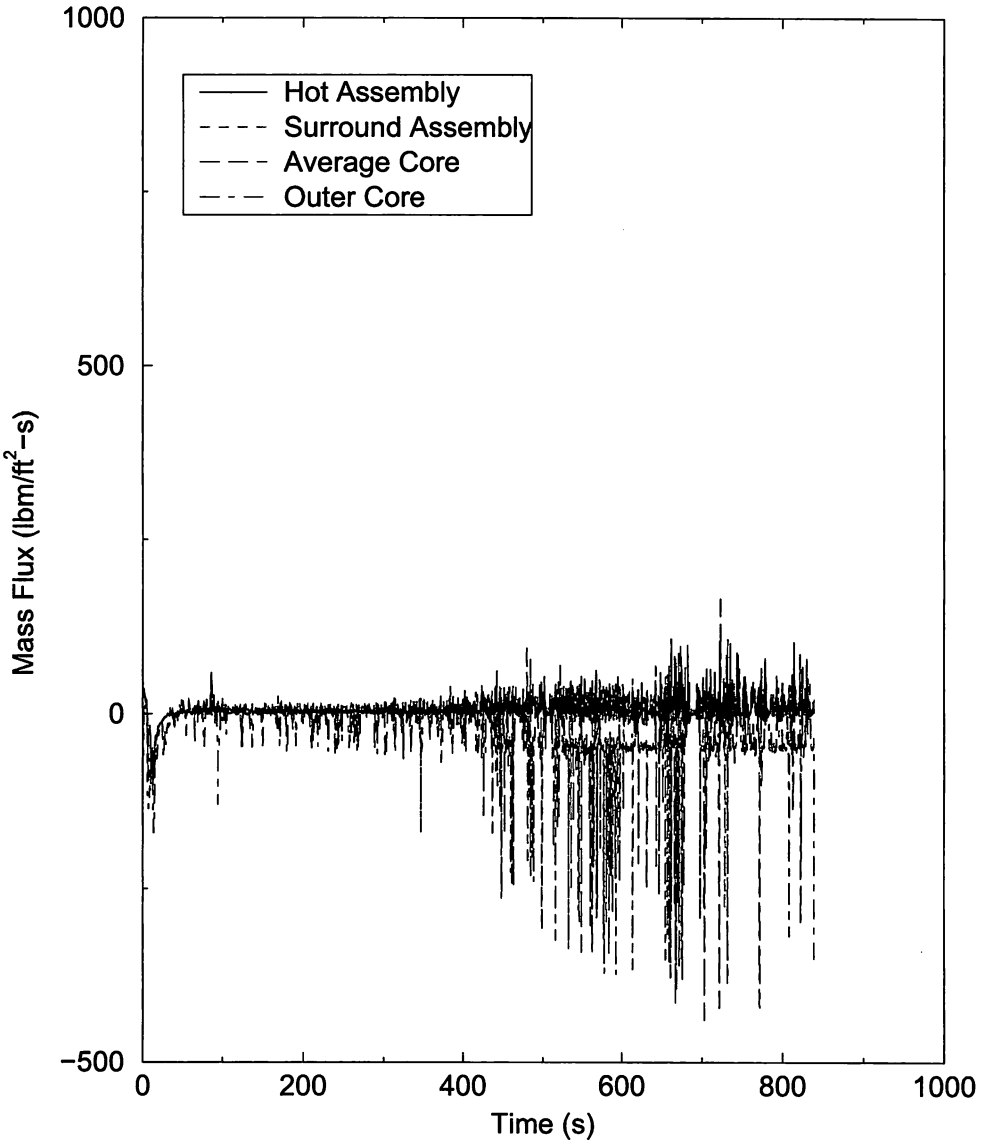

Figure 15.4.1-4
Realistic Large Break LOCA - Core Outlet Mass Flux for the Limiting Case

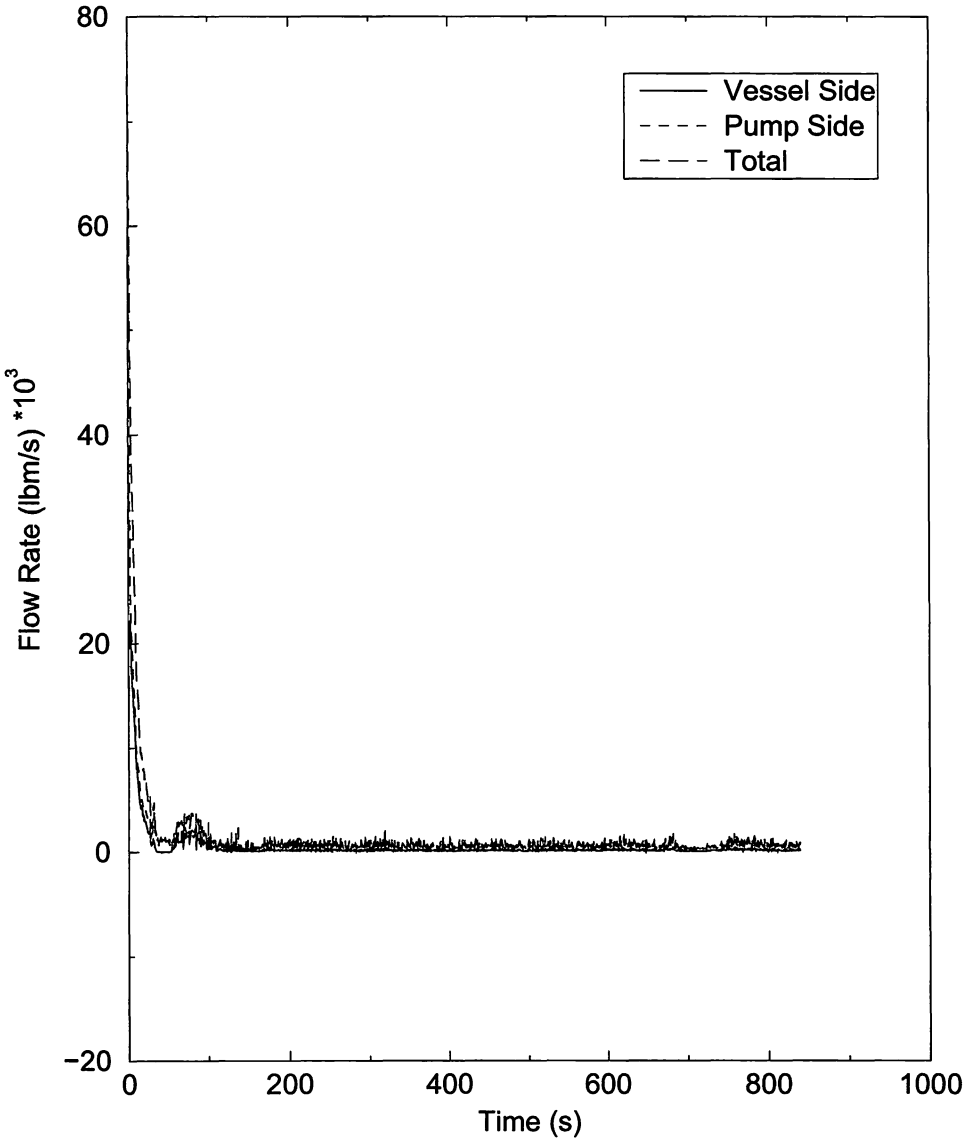

Figure 15.4.1-6
Realistic Large Break LOCA - Break Mass Flowrate for the Limiting Case

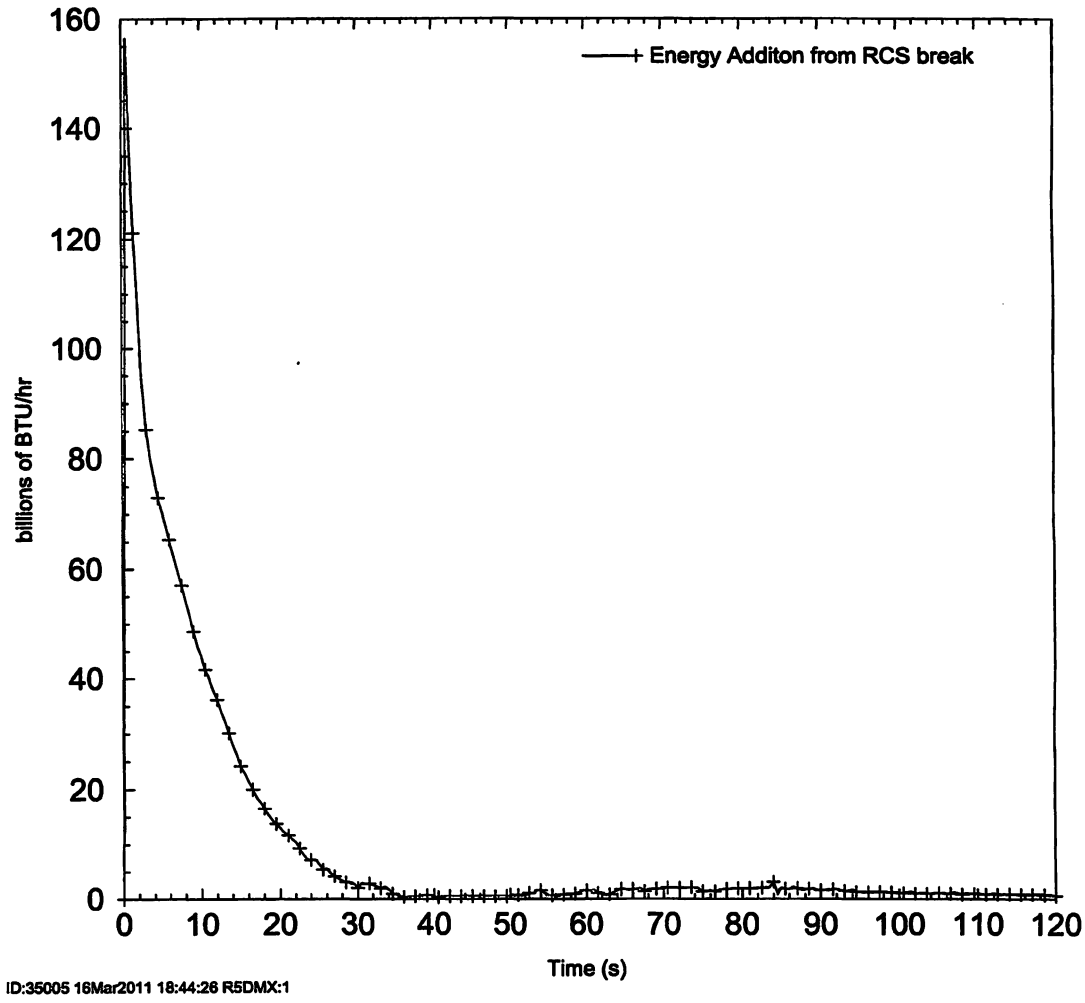

Figure 15.4.1-7

Realistic Large Break LOCA - Break Energy Flowrate
For the Limiting Case

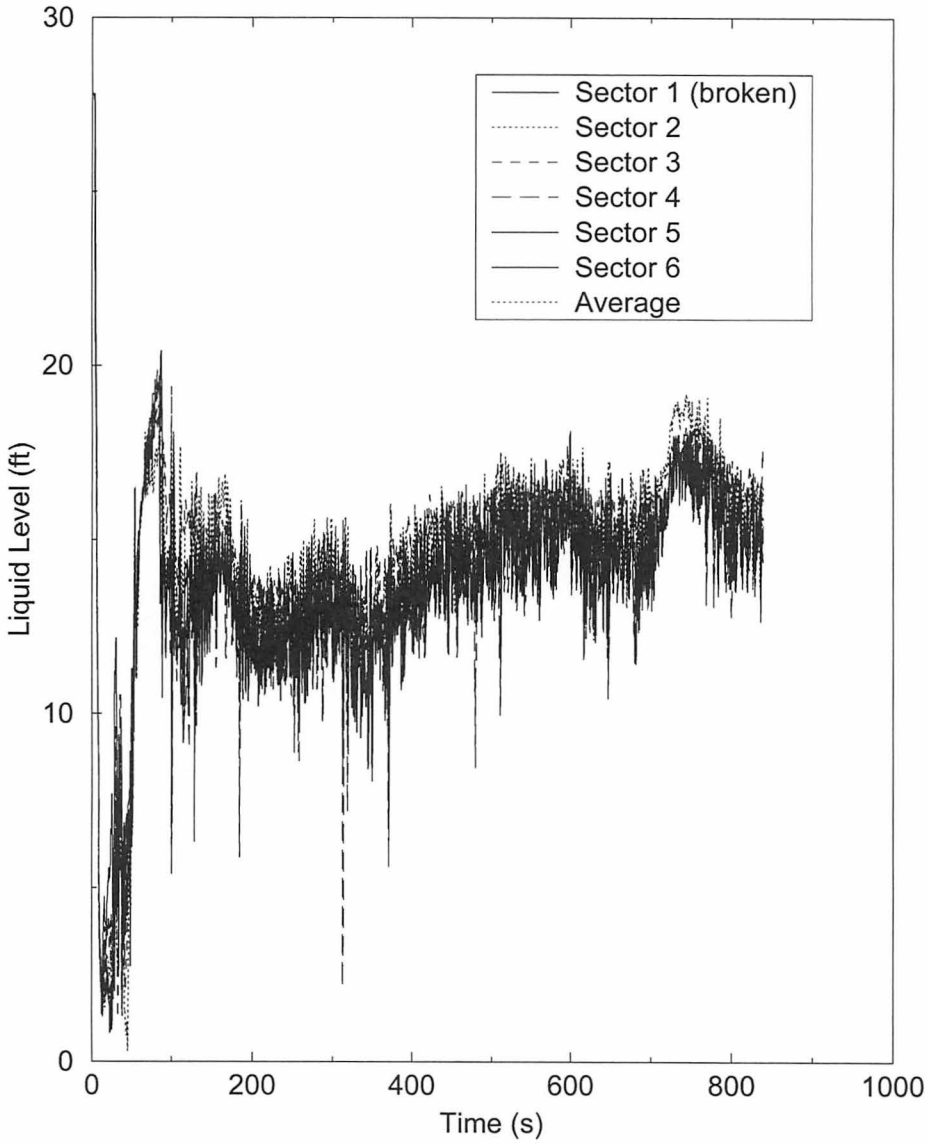

Figure 15.4.1-9
Realistic Large Break LOCA - Downcomer Liquid Level for the Limiting Case

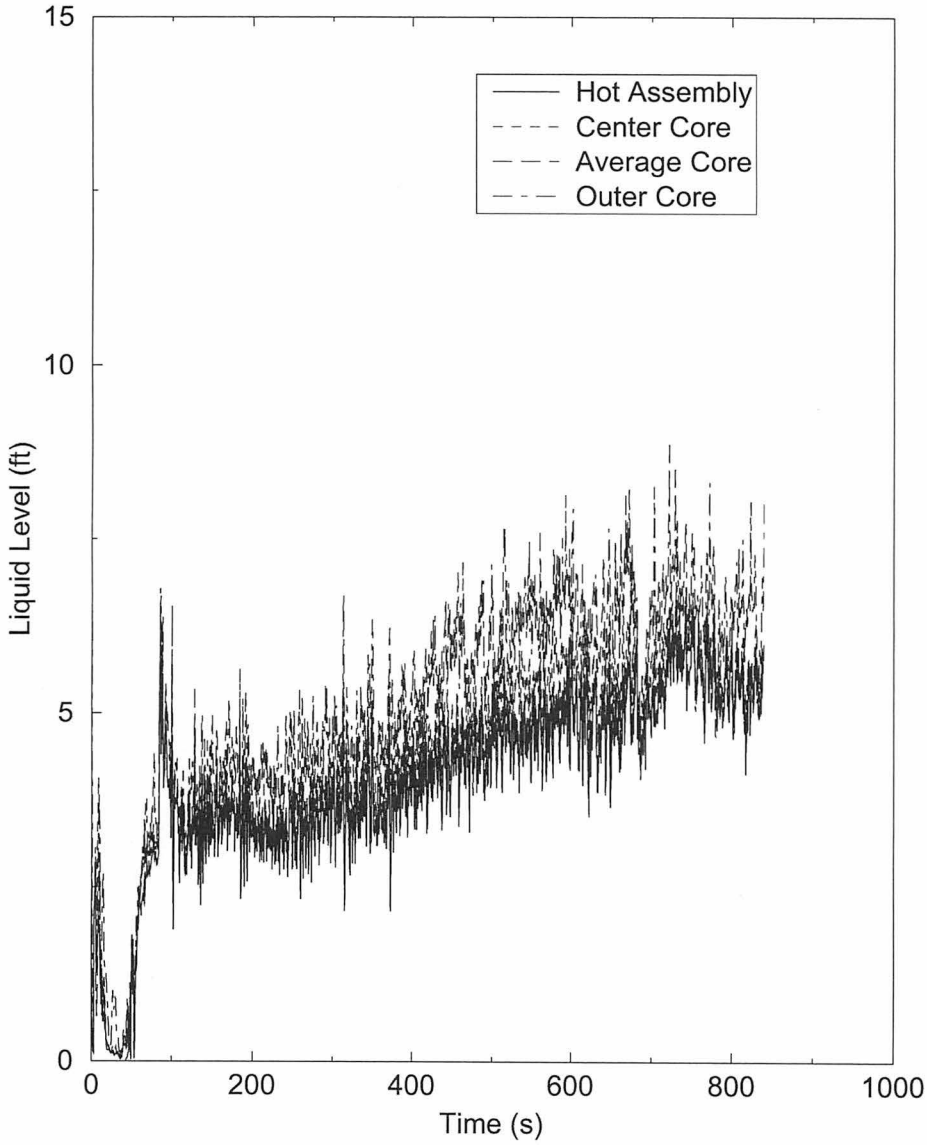

Figure 15.4.1-10
Realistic Large Break LOCA - Core Liquid Level for the Limiting Case

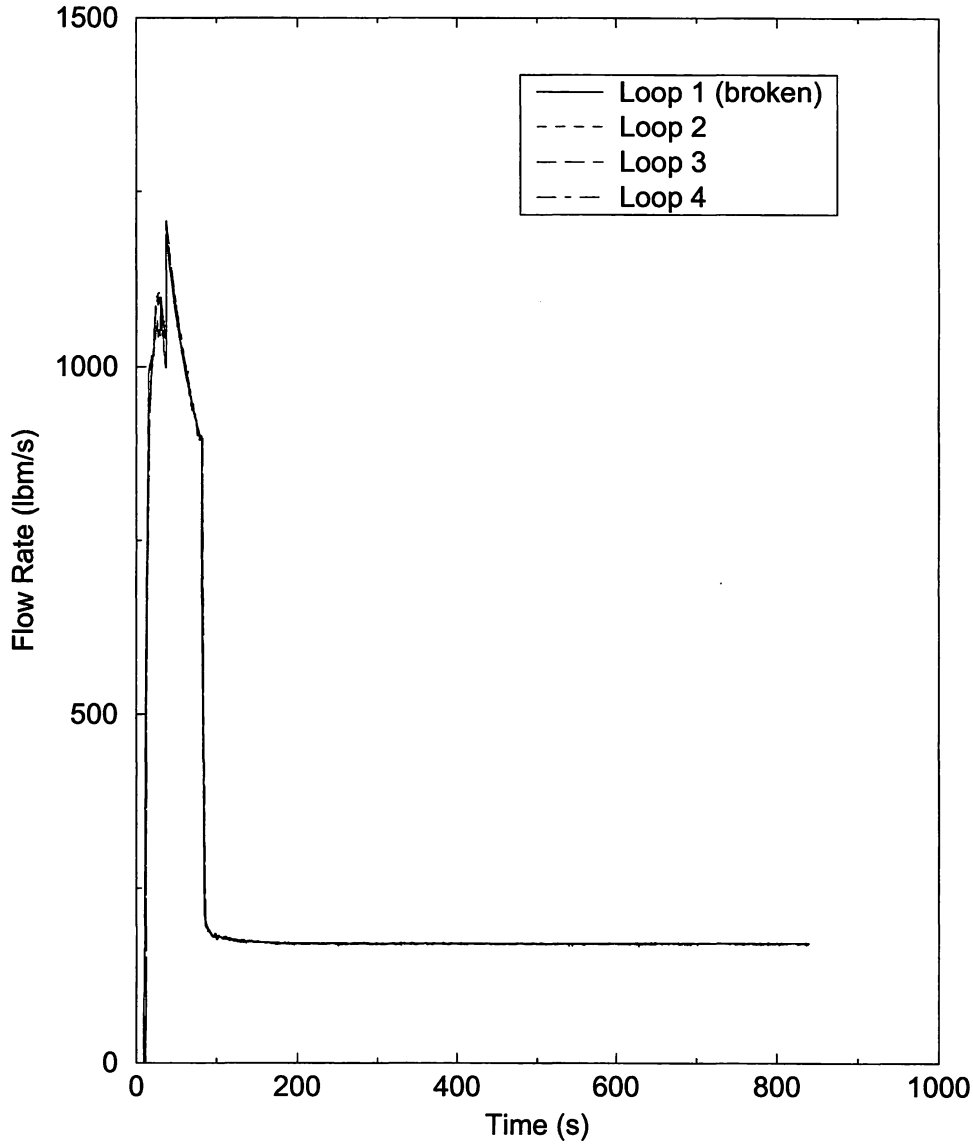

Figure 15.4.1-11
Realistic Large Break LOCA - Accumulator and Pumped SI Flowrate for the Limiting Case

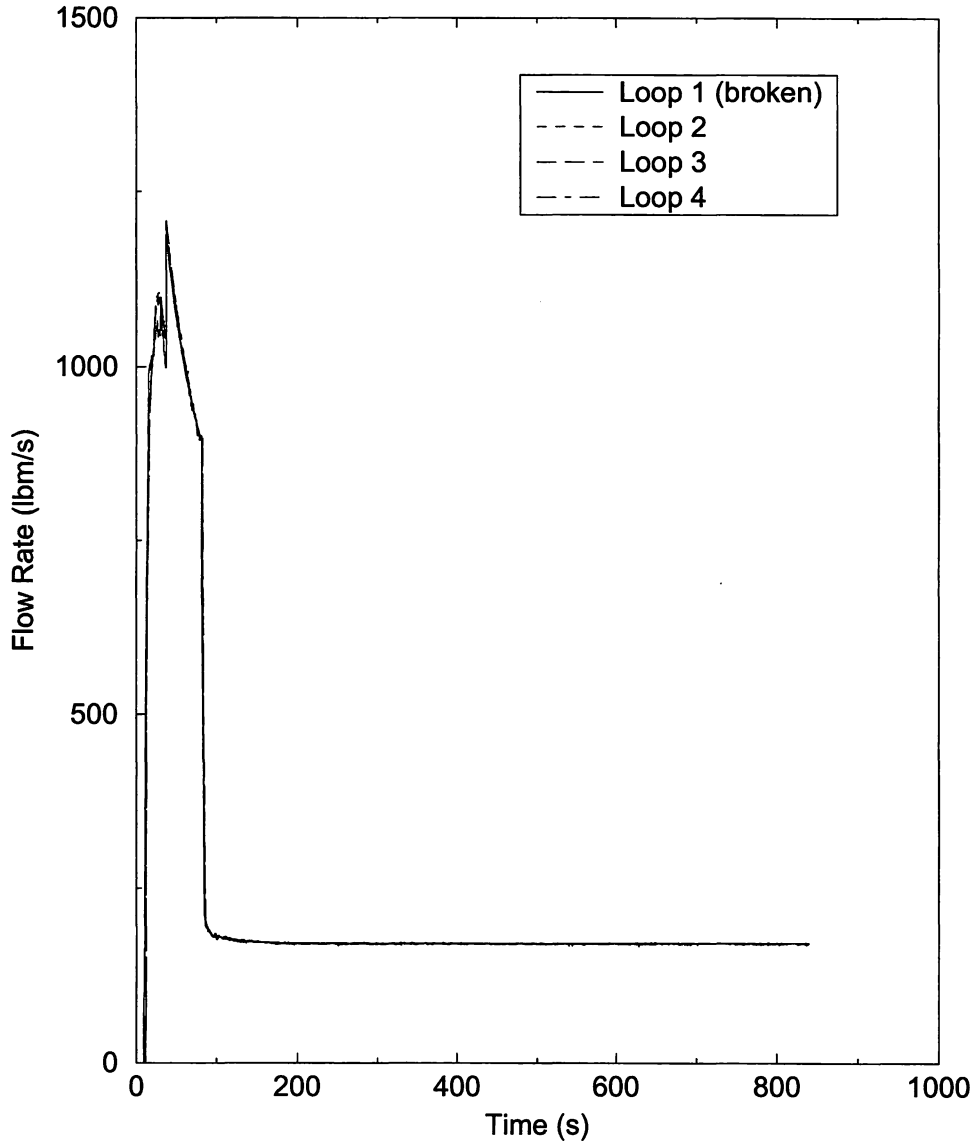

Figure 15.4.1-11
Realistic Large Break LOCA - Accumulator and Pumped SI Flowrate for the Limiting Case

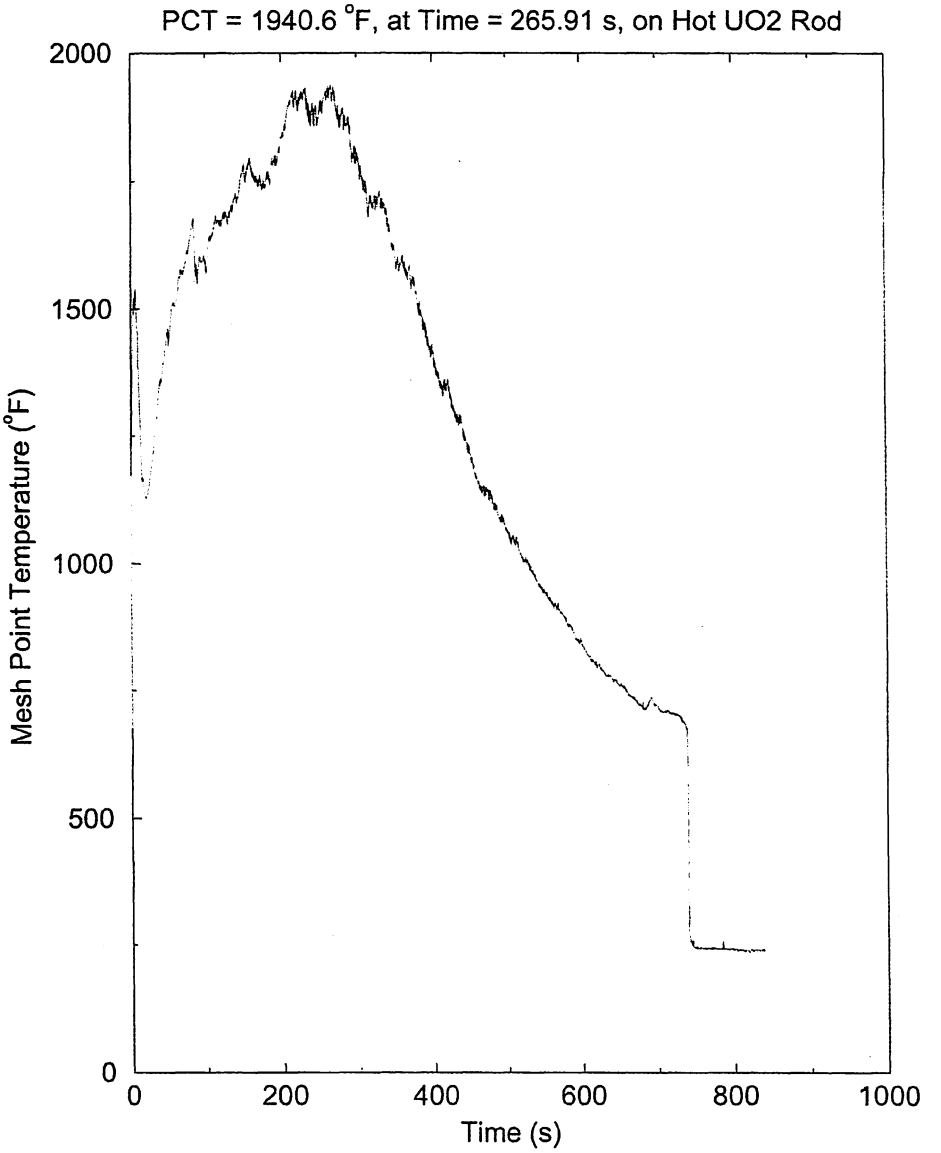

Figure 15.4.1-14
Realistic Large Break LOCA - Peak Clad Temperature for the Limiting Case

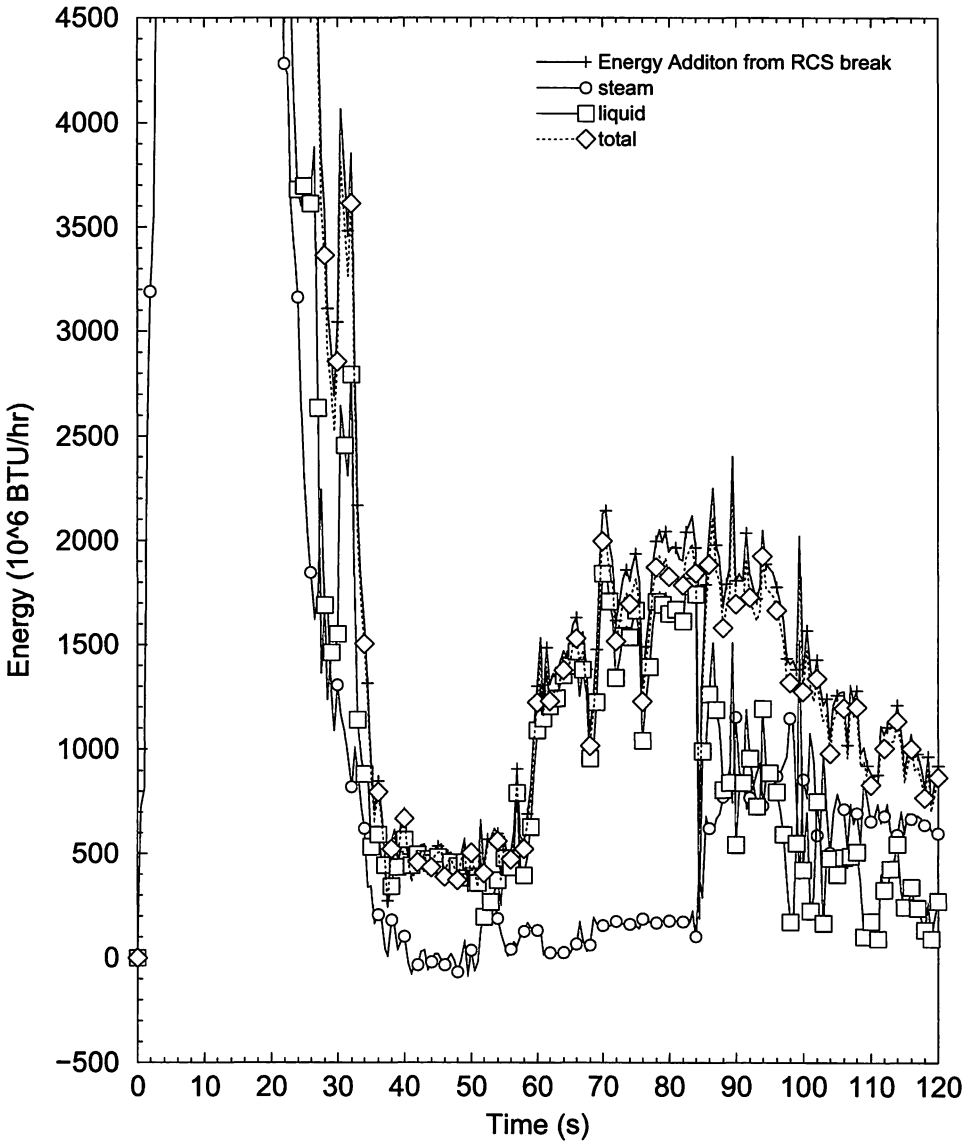

Figure 15.4.1-15
Realistic Large Break LOCA - Energy Addition in Lower Compartment for the Limiting Case

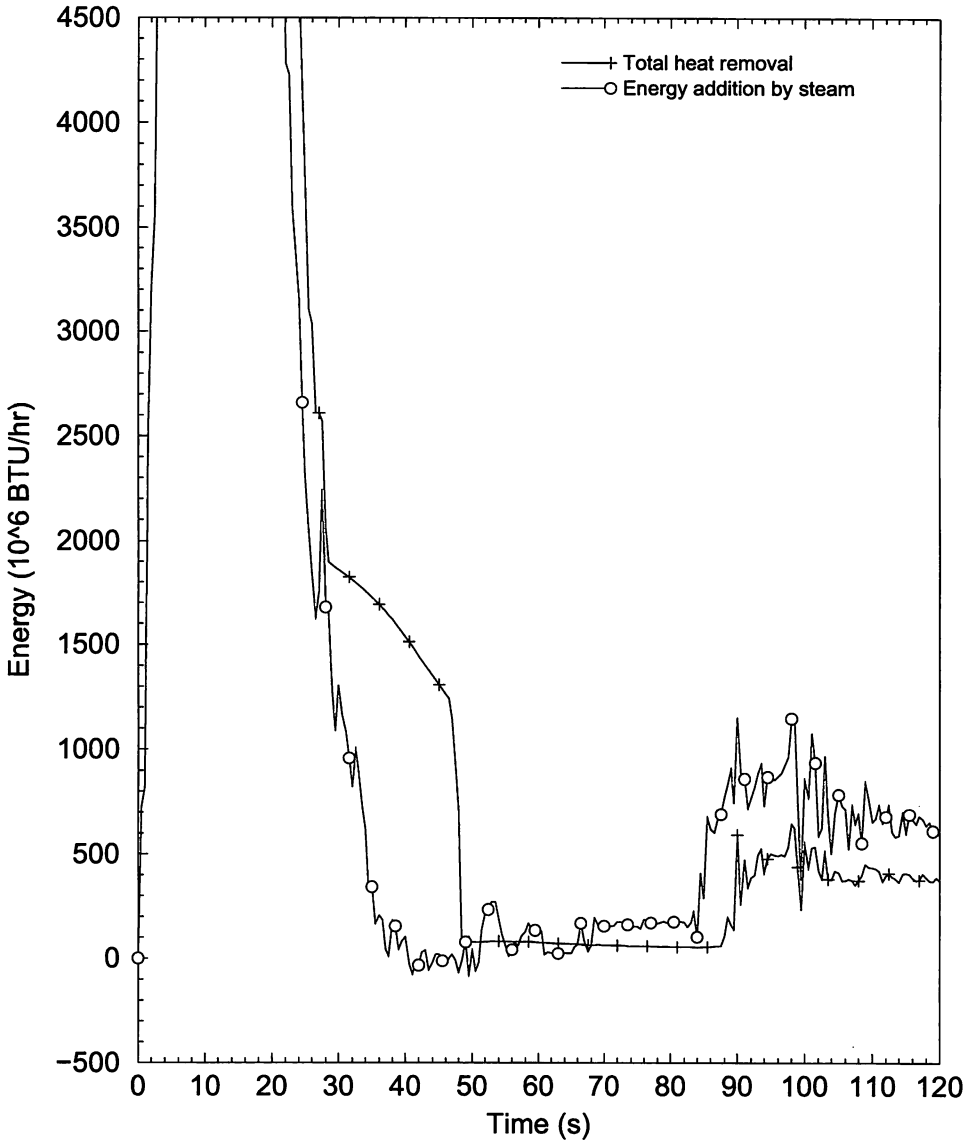

Figure 15.4.1-16
Realistic Large Break LOCA - Energy Rates in Lower Compartment for the Limiting Case

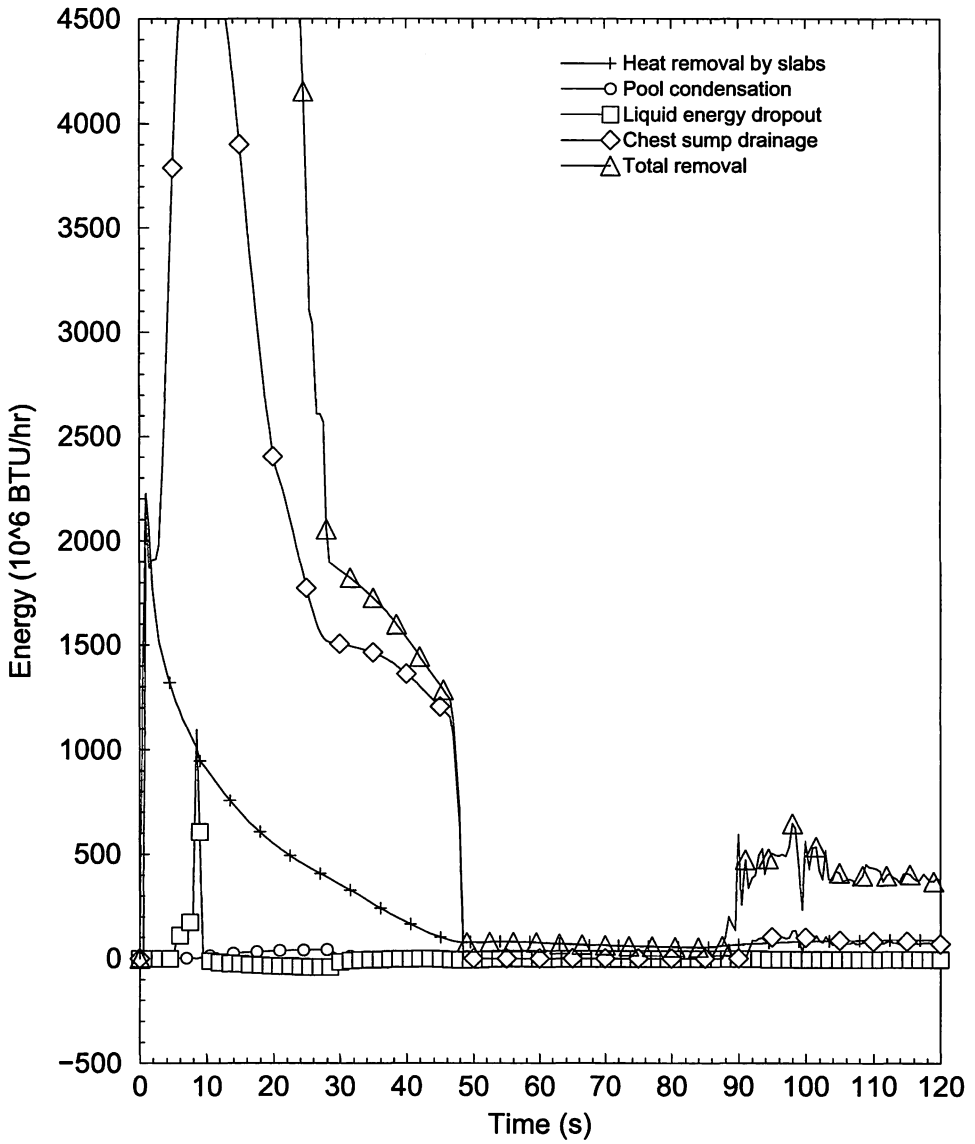

Figure 15.4.1-17
Realistic Large Break LOCA - Energy Removal Rates in Lower Compartment for the Limiting Case

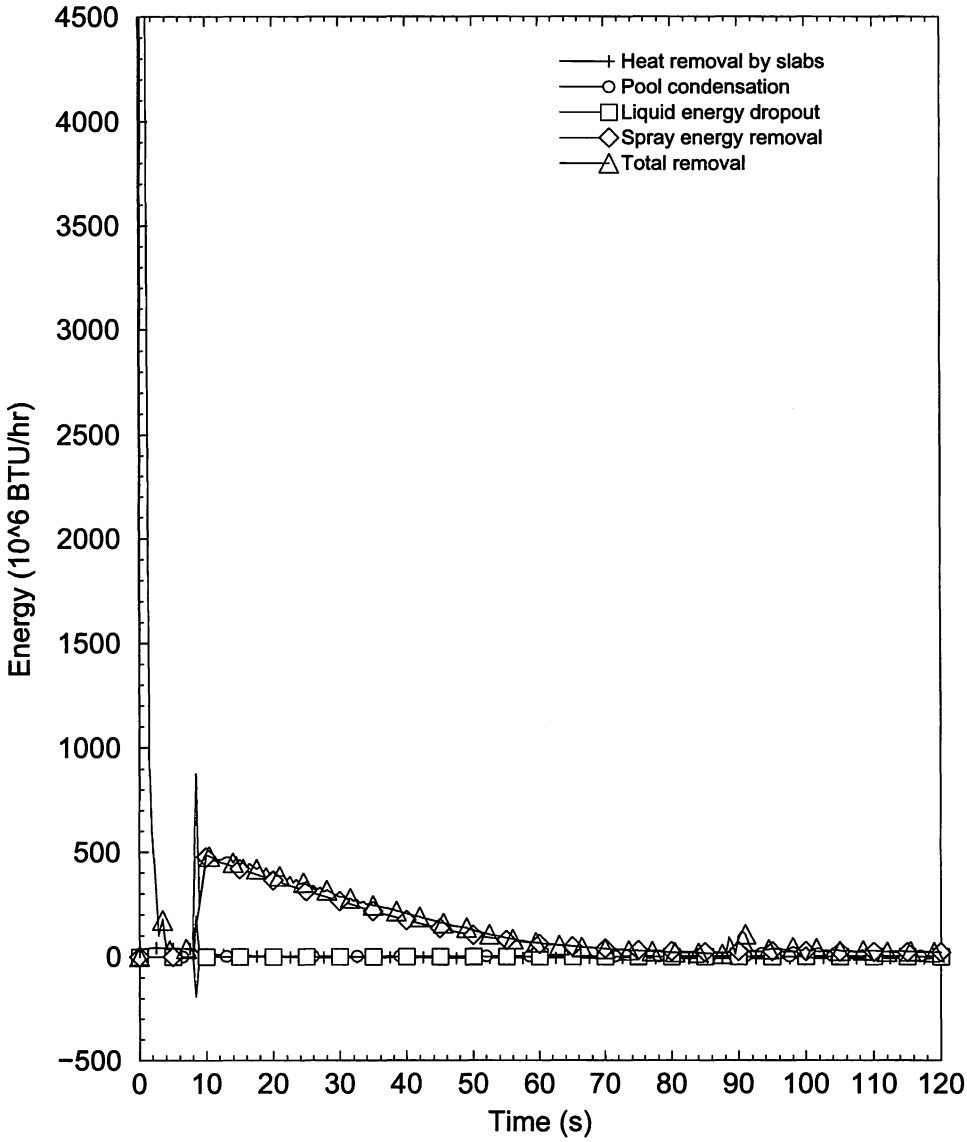

Figure 15.4.1-18
Realistic Large Break LOCA - Energy Removal Rates in Upper Compartment for the Limiting Case

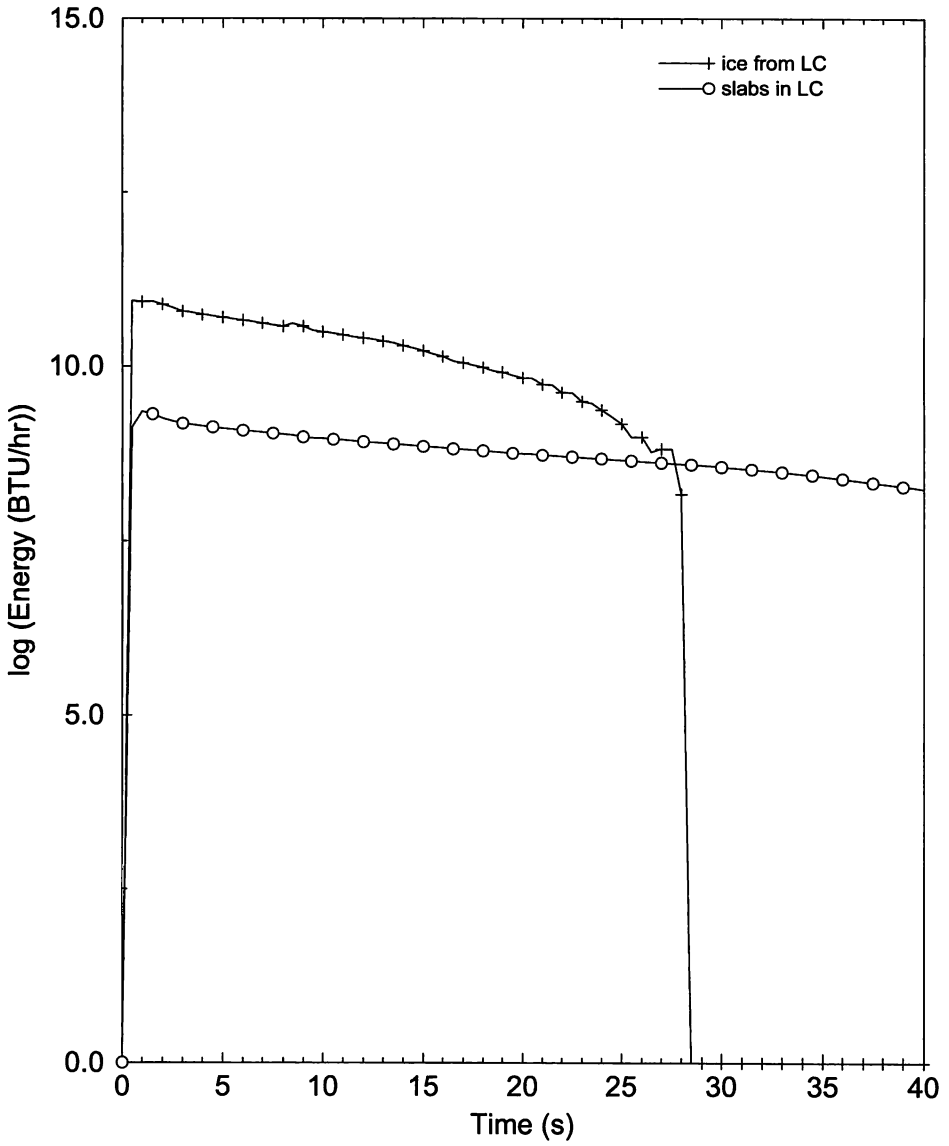

Figure 15.4.1-19
Realistic Large Break LOCA - Heat Removal Rates (log) for the Limiting Case

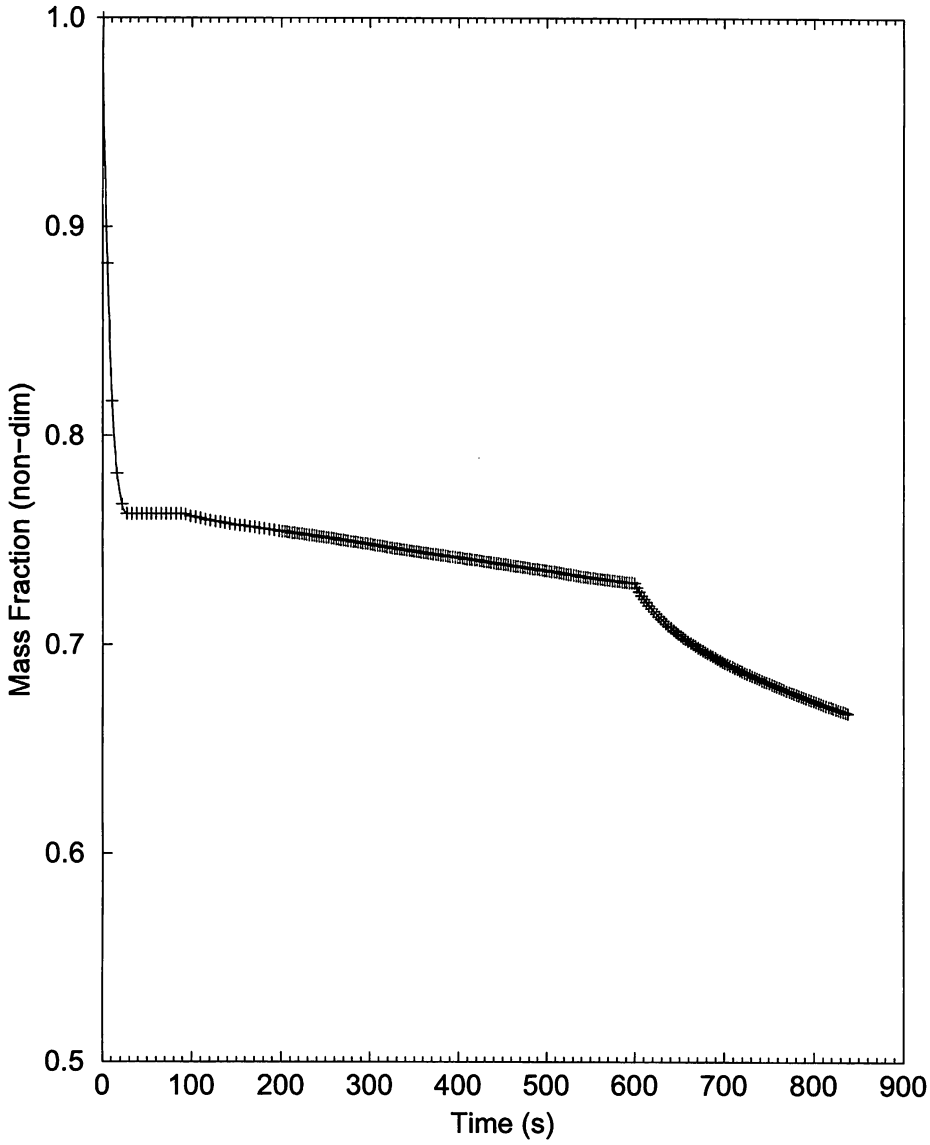

Figure 15.4.1-20
Realistic Large Break LOCA - Fraction of Ice Remaining for the Limiting Case

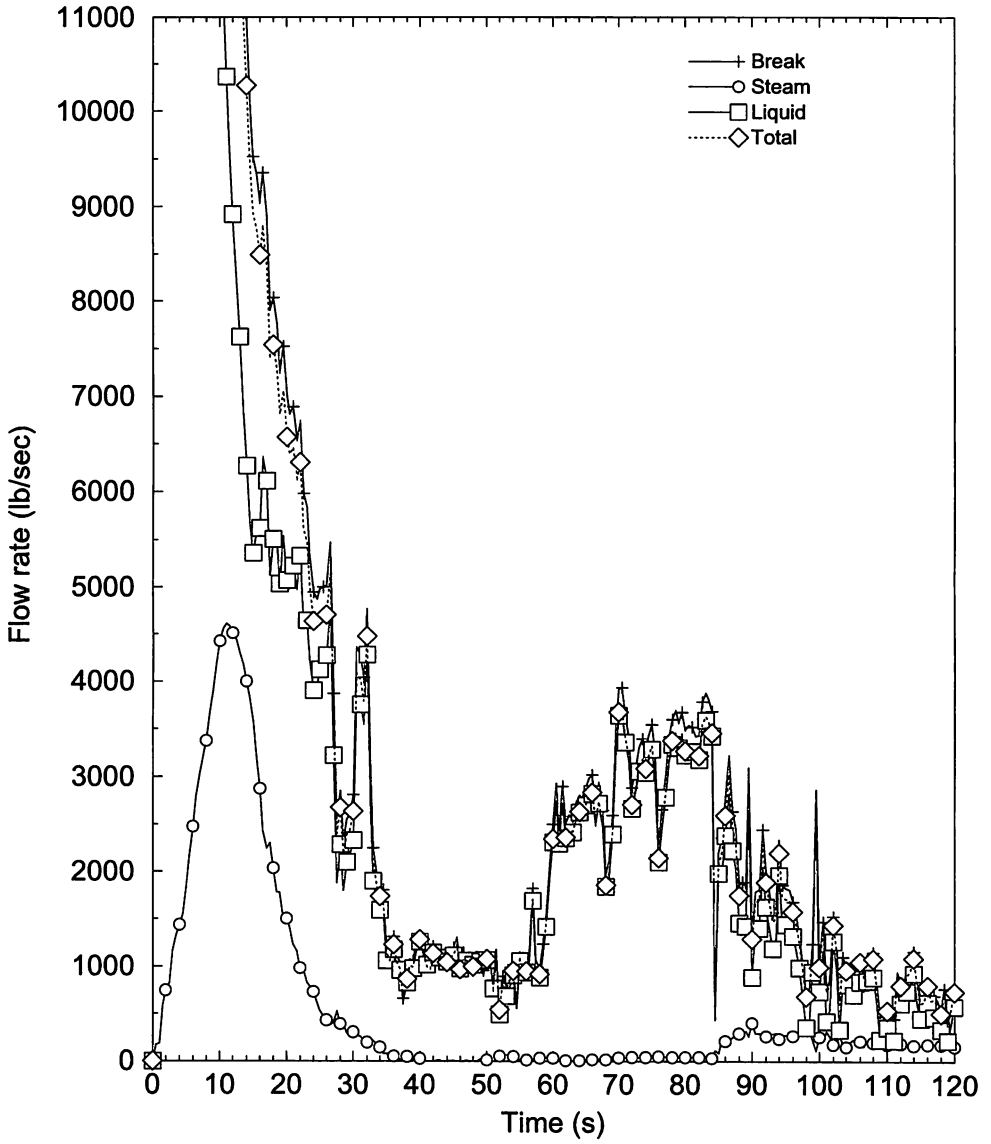

Figure 15.4.1-21
Realistic Large Break LOCA - Mass Addition to Lower Compartment for the Limiting Case

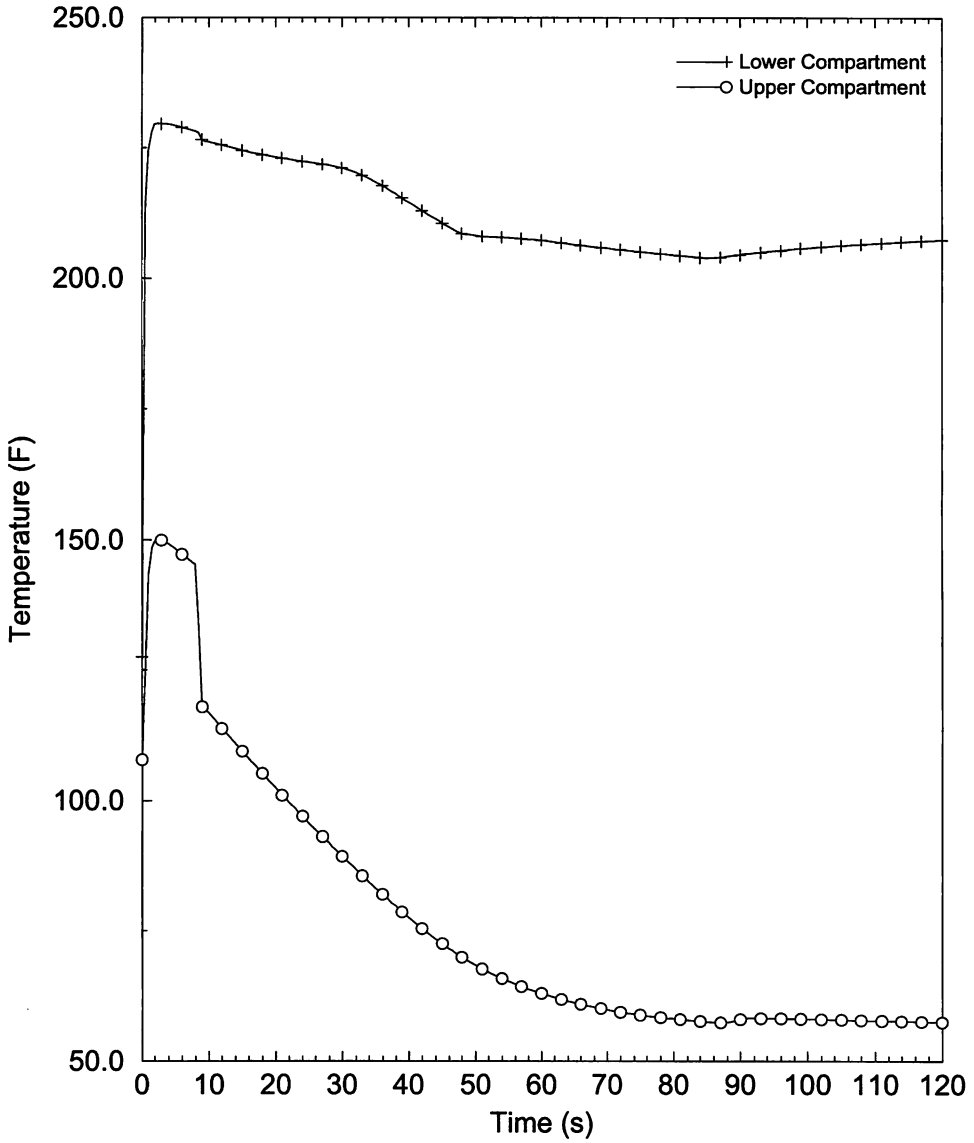

Figure 15.4.1-22
Realistic Large Break LOCA - Compartment Temperature for the Limiting Case

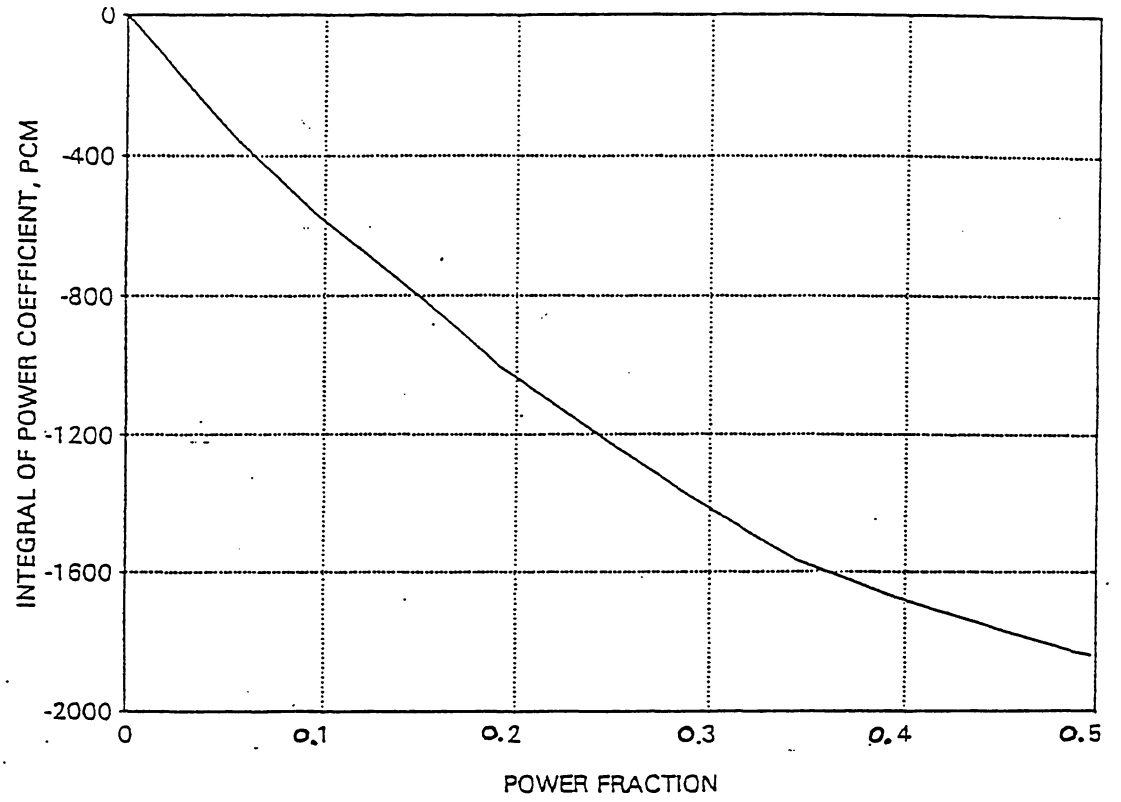

FIGURE 15.4.2-1

Variation of Reactivity with Power at Constant Core Average Temperature
Power Doppler Reactivity

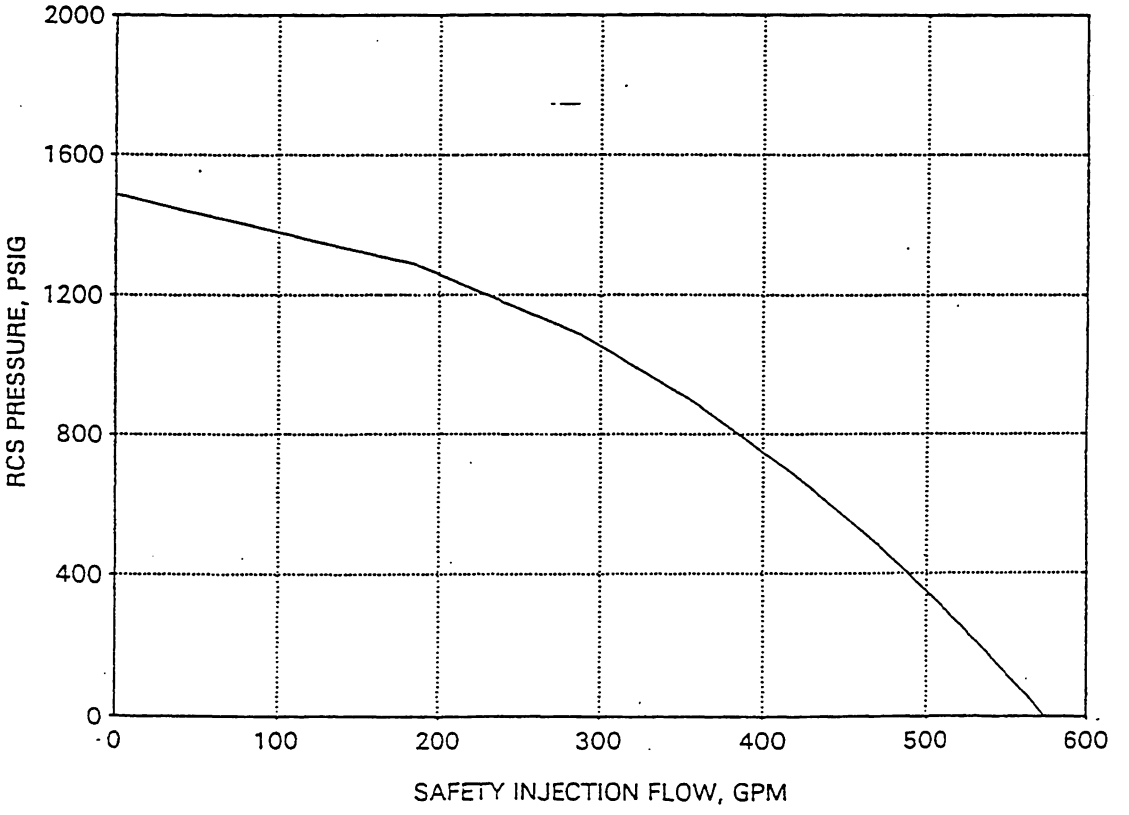

FIGURE 15.4.2-2

Safety Injection Curve
Minimum Safeguards

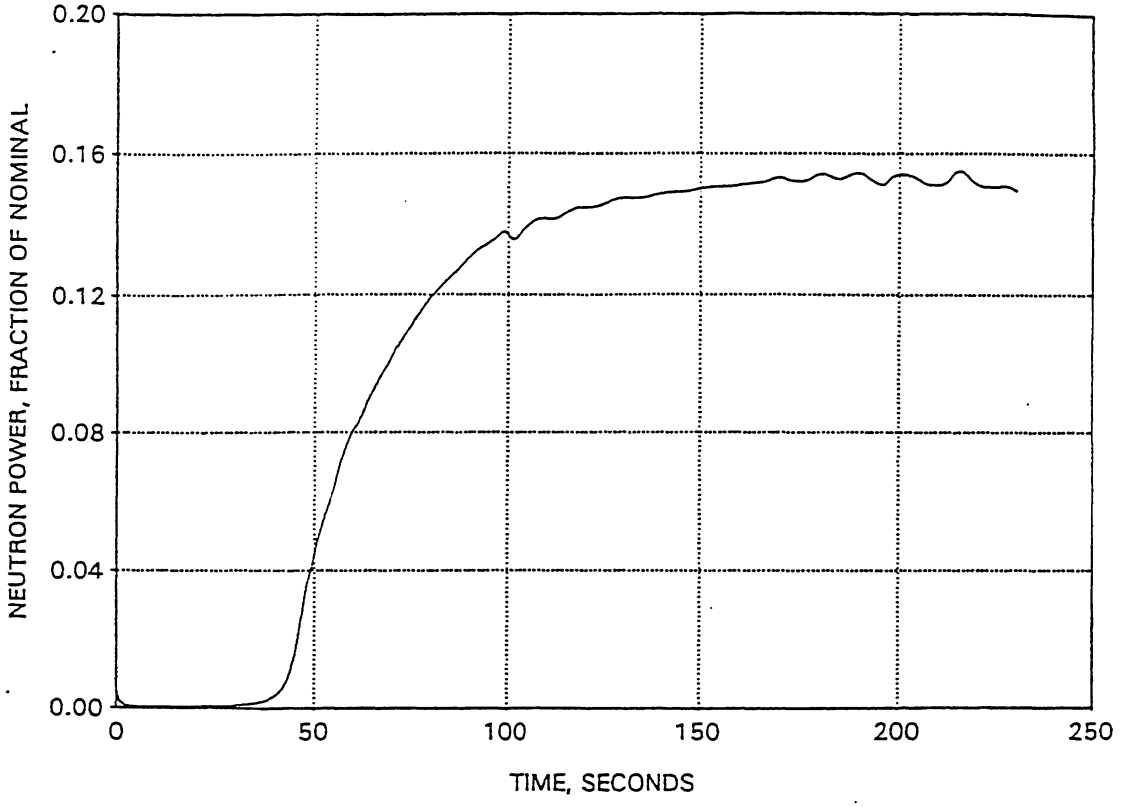

FIGURE 15.4.2-3

Sequoyah Steam Line Break Downstream of Flow Measuring Nozzle
With Off-Site Power (Case A)
Neutron Power

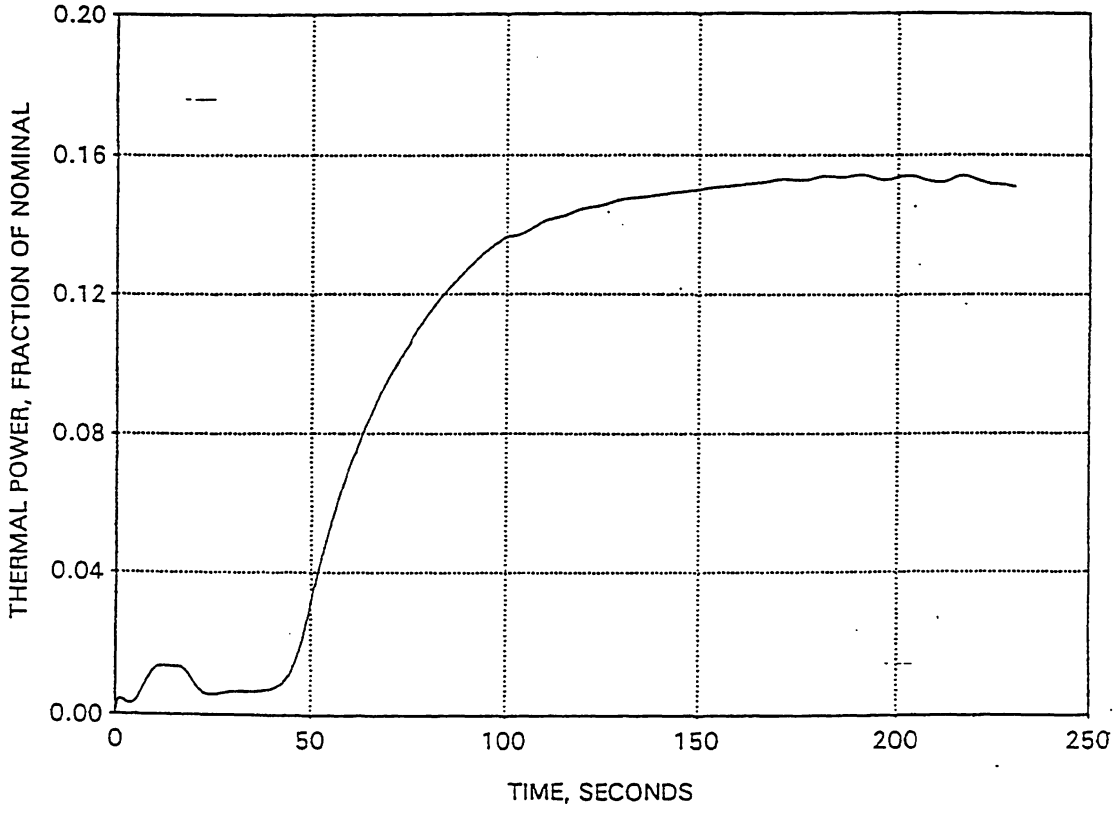

FIGURE 15.4.2-4

Sequoyah Steam Line Break Downstream of Flow Measuring Nozzle
With Off-Site Power (Case A)
Thermal Power

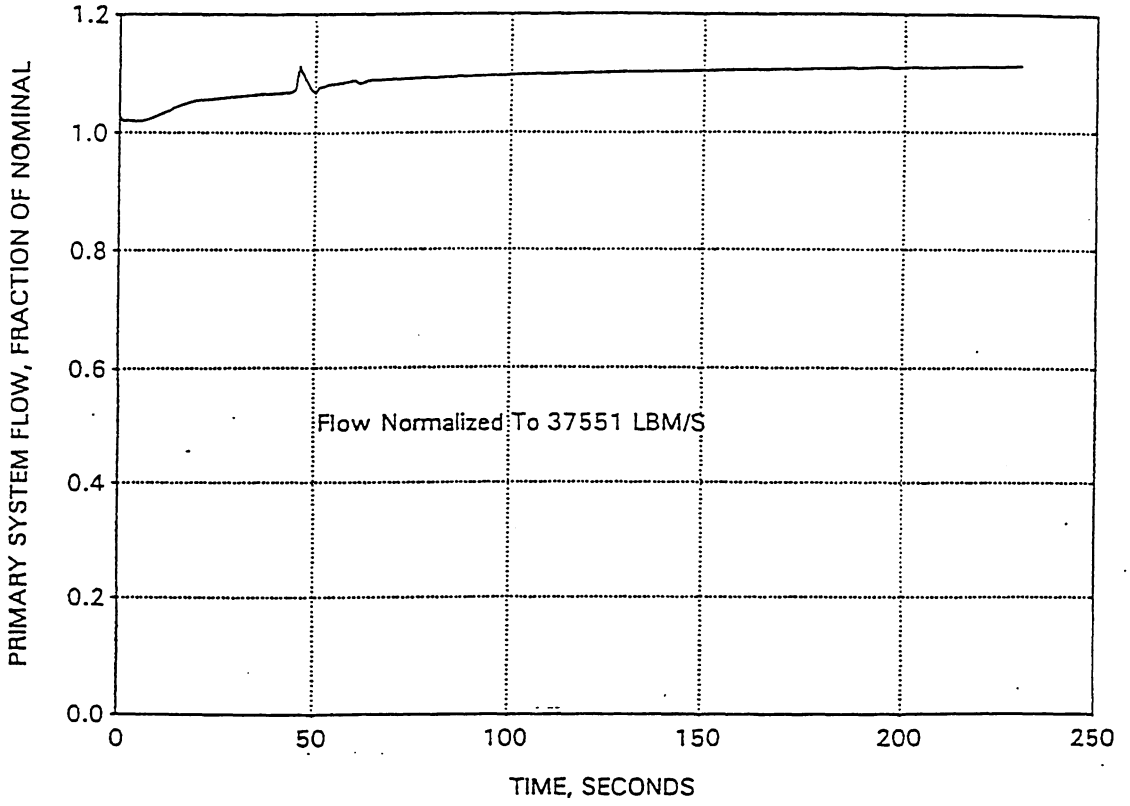

FIGURE 15.4.2-5

Sequoyah Steam Line Break Downstream of Flow Measuring Nozzle
With Off-Site Power (Case A)
RCS Flow

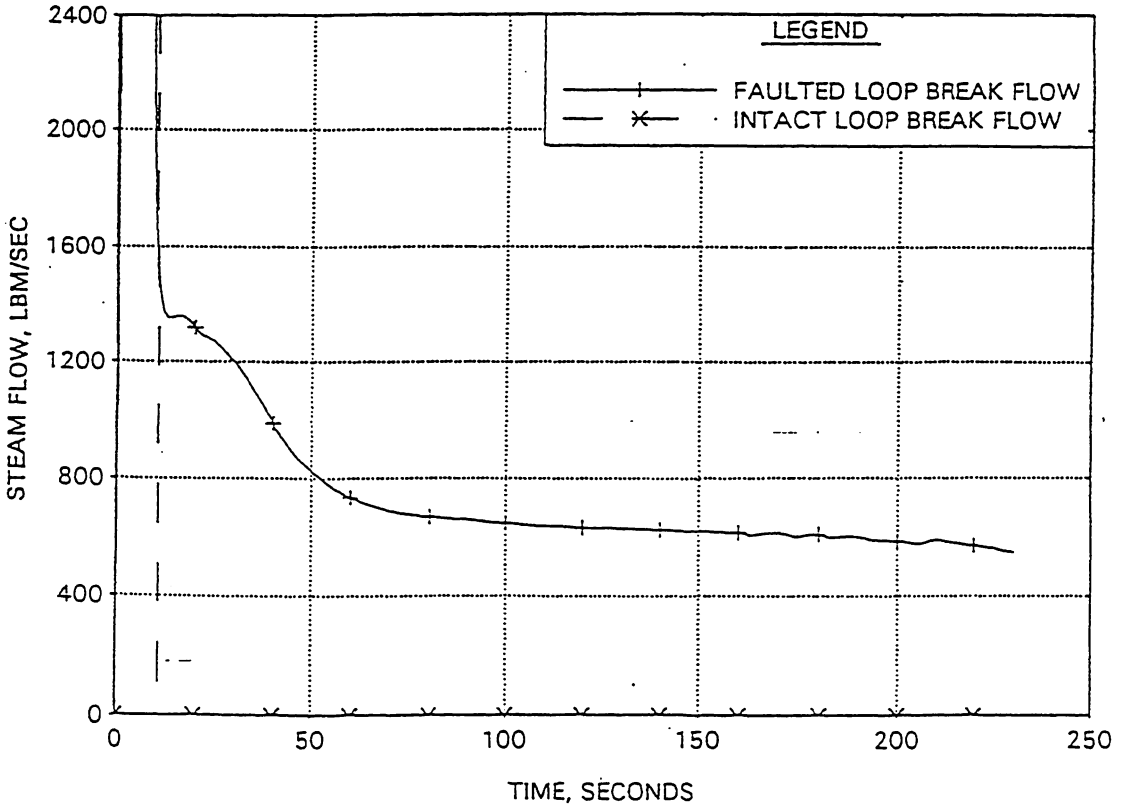

FIGURE 15.4.2-6

Sequoyah Steam Line Break Downstream of Flow Measuring Nozzle With Off-Site Power (Case A) Steam Flow

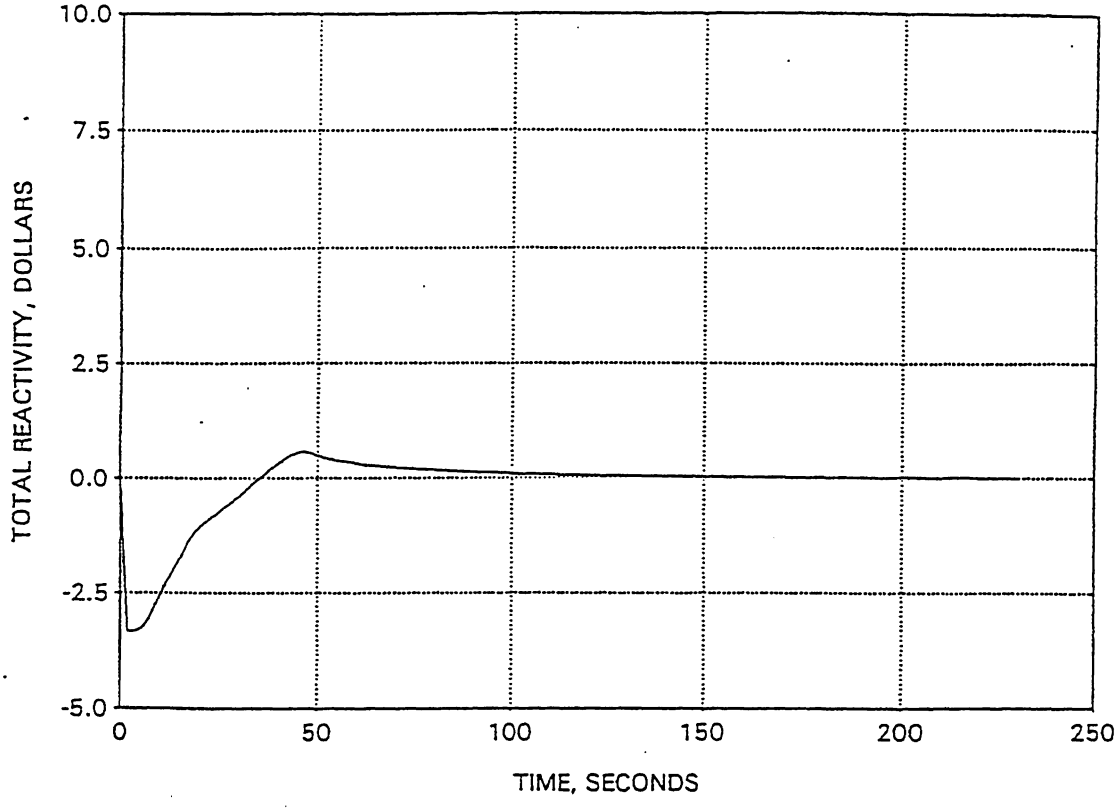

FIGURE 15.4.2-7

Sequoyah Steam Line Break Downstream of Flow Measuring Nozzle With Off-Site Power (Case A) Reactivity

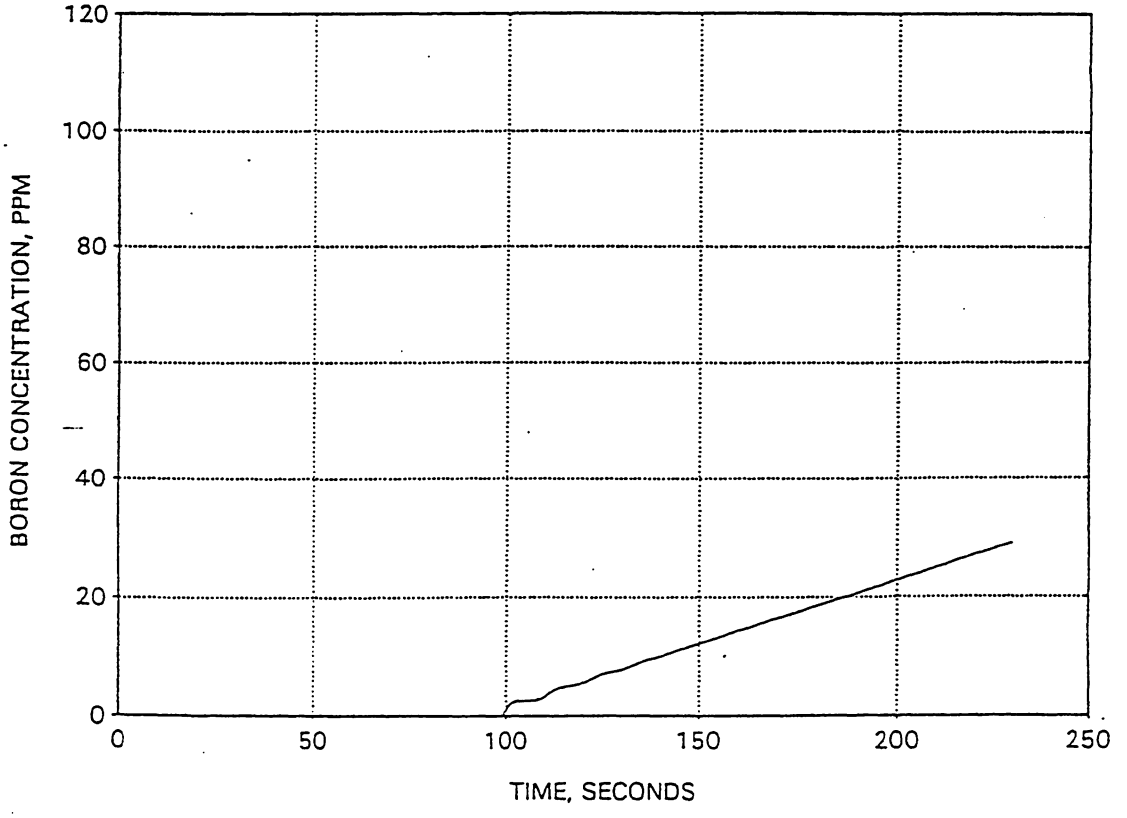

FIGURE 15.4.2-8

Sequoyah Steam Line Break Downstream of Flow Measuring Nozzle
With Off-Site Power (Case A)
Core Boron

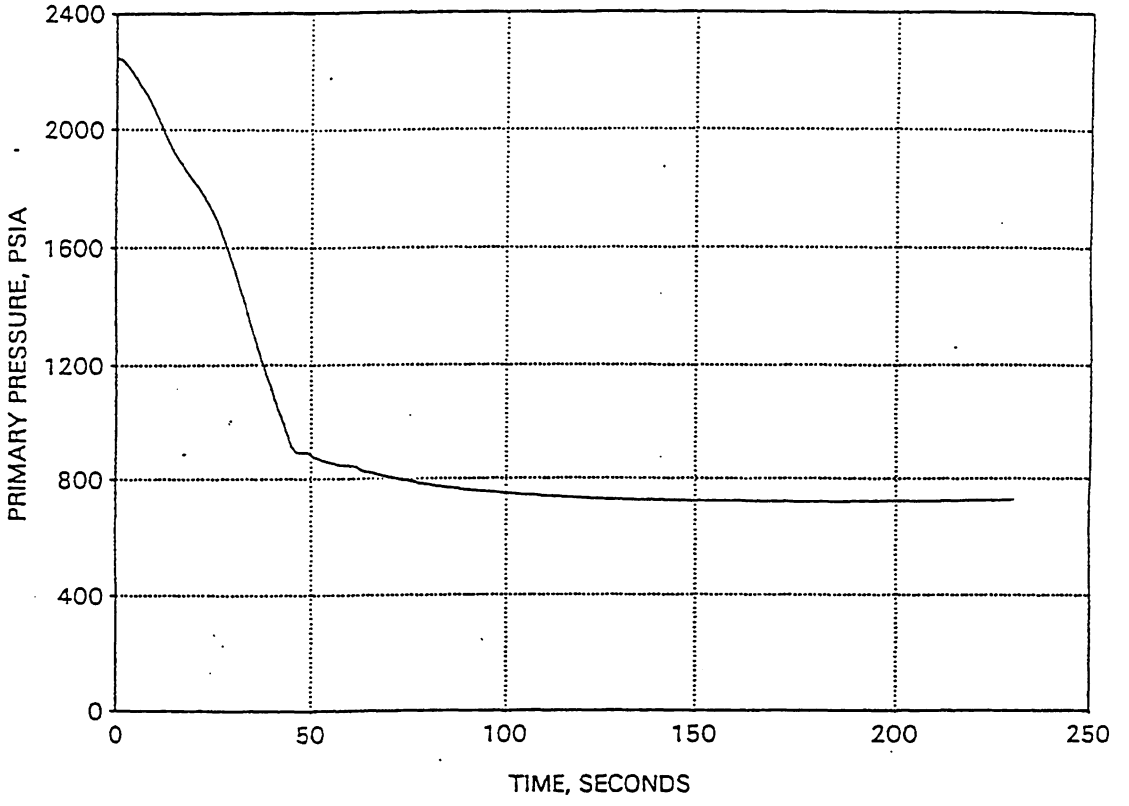

FIGURE 15.4.2-9

Sequoyah Steam Line Break Downstream of Flow Measuring Nozzle With Off-Site Power (Case A) System Pressure

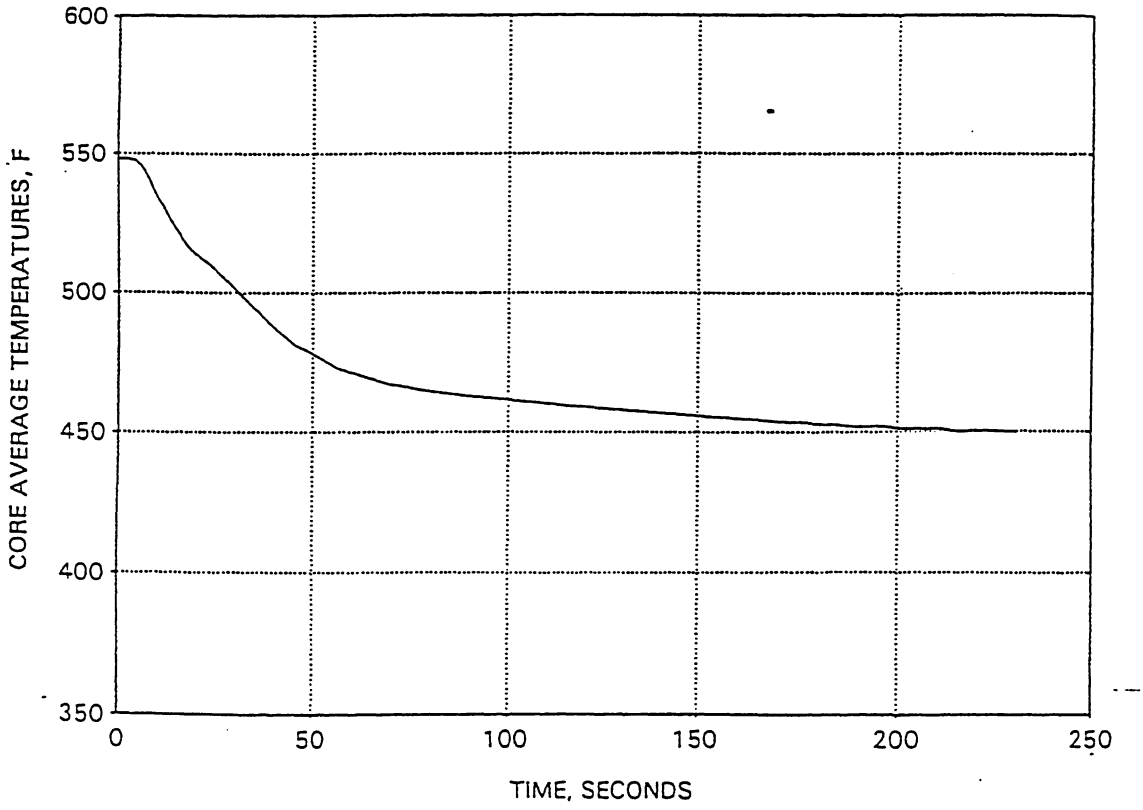

FIGURE 15.4.2-10

Sequoyah Steam Line Break Downstream of Flow Measuring Nozzle
With Off-Site Power (Case A)
Core Average Temperature

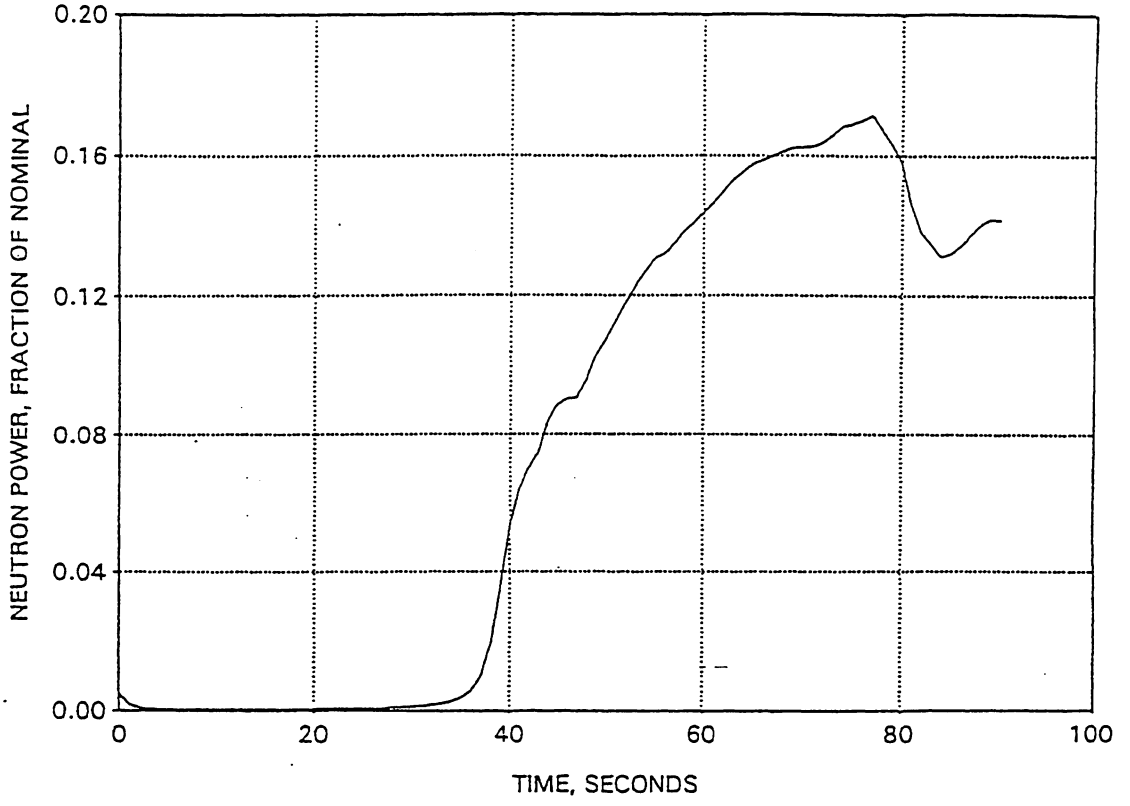

FIGURE 15.4.2-11

Sequoyah Steam Line Break Upstream of Flow Measuring Nozzle
With Off-Site Power (Case B)
Neutron Power

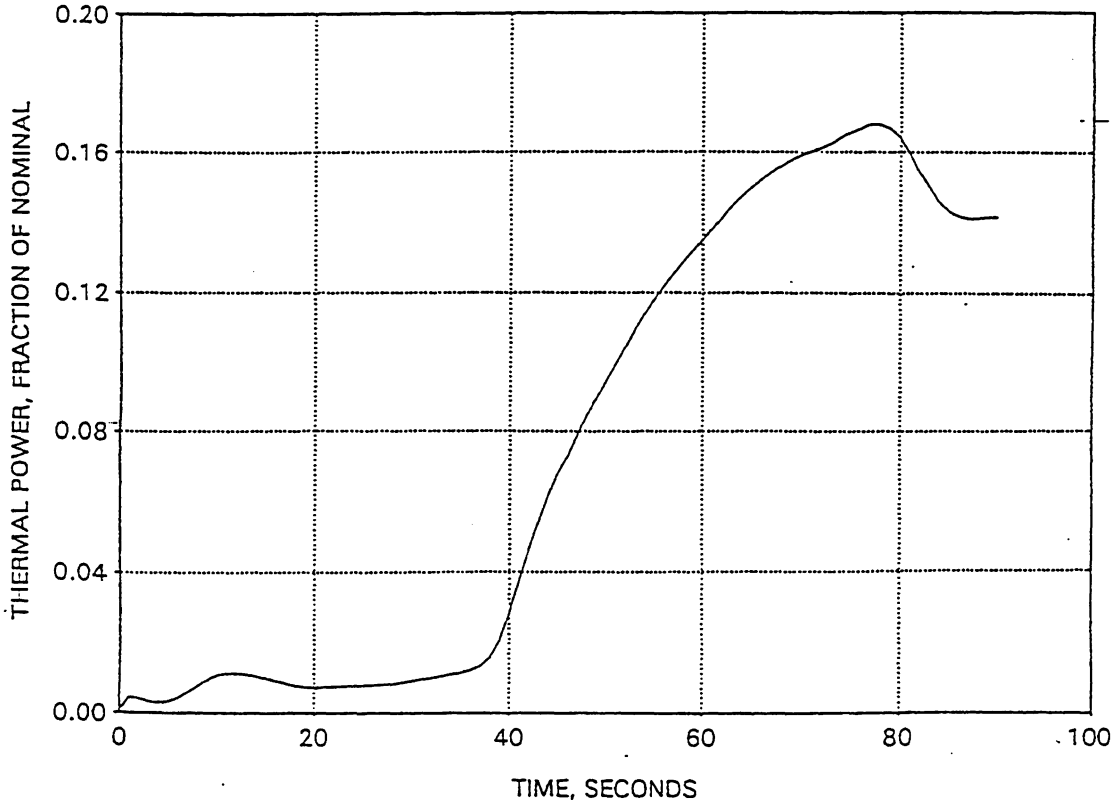

FIGURE 15.4.2-12

Sequoyah Steam Line Break Upstream of Flow Measuring Nozzle With Off-Site Power (Case B) Thermal Power

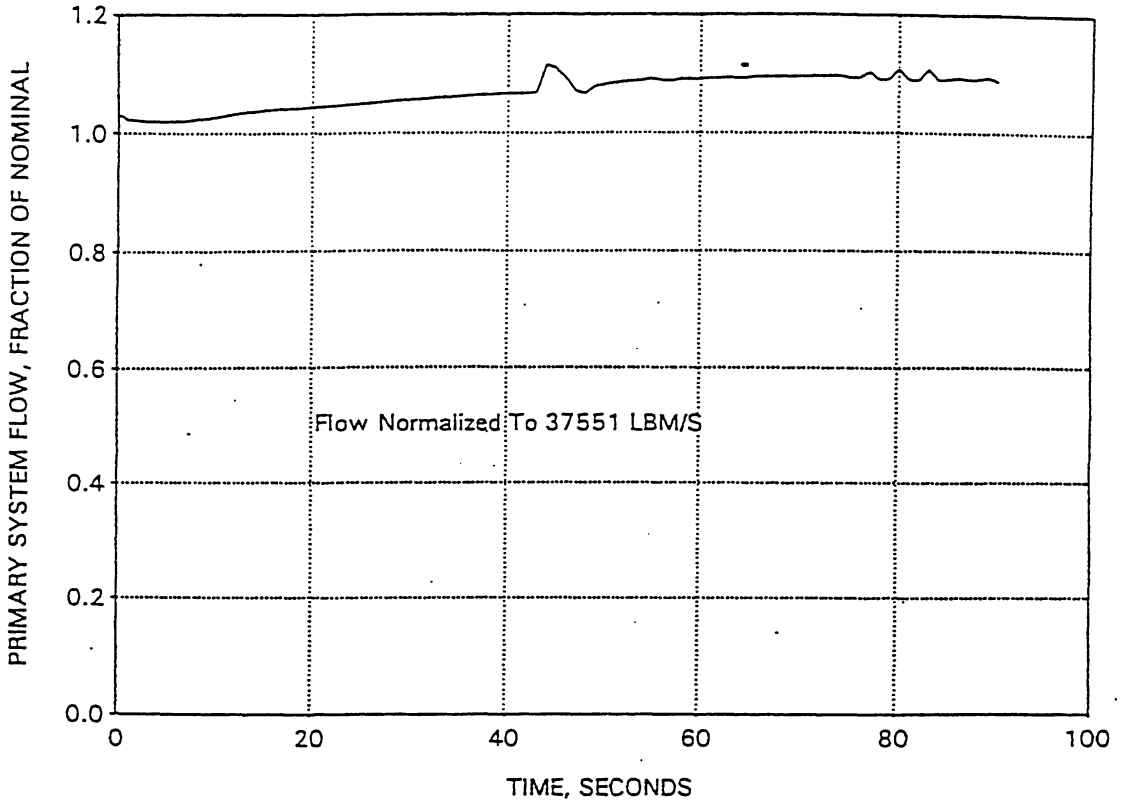

FIGURE 15.4.2-13

Sequoyah Steam Line Break Upstream of Flow Measuring Nozzle With Off-Site Power (Case B) RCS Flow

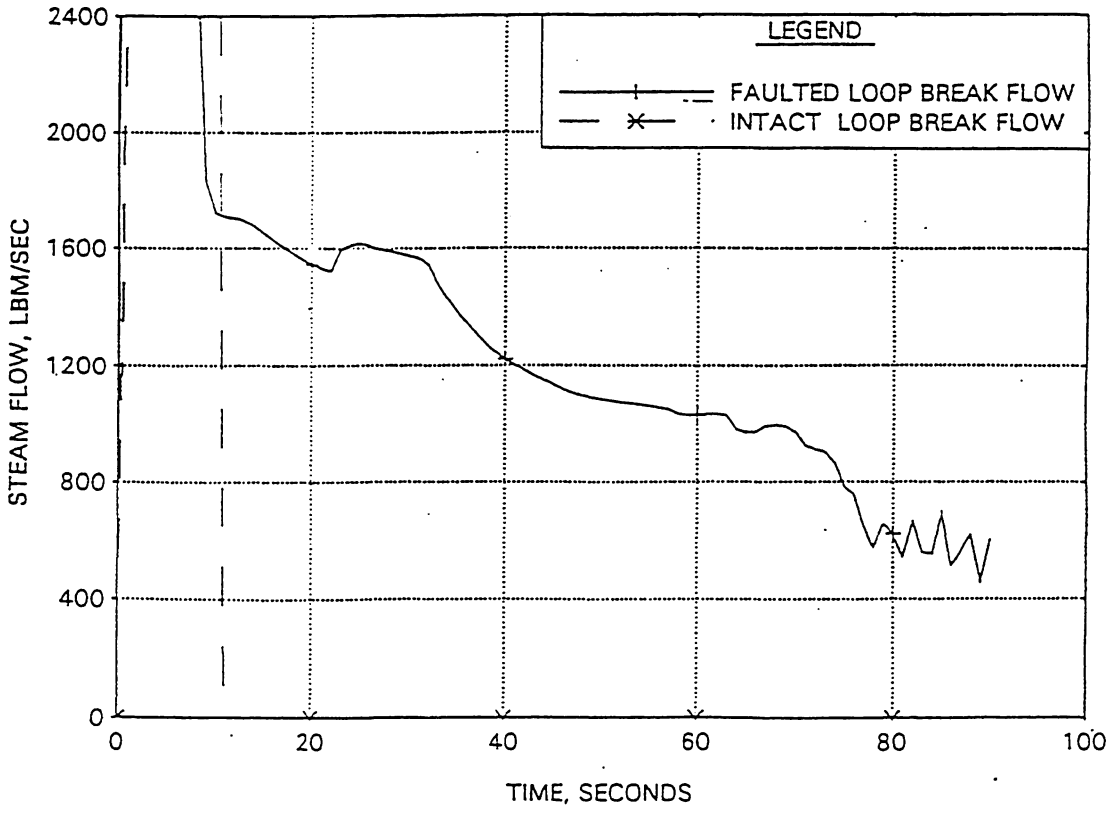

FIGURE 15.4.2-14

Sequoyah Steam Line Break Upstream of Flow Measuring Nozzle
With Off-Site Power (Case B)
Steam Flow

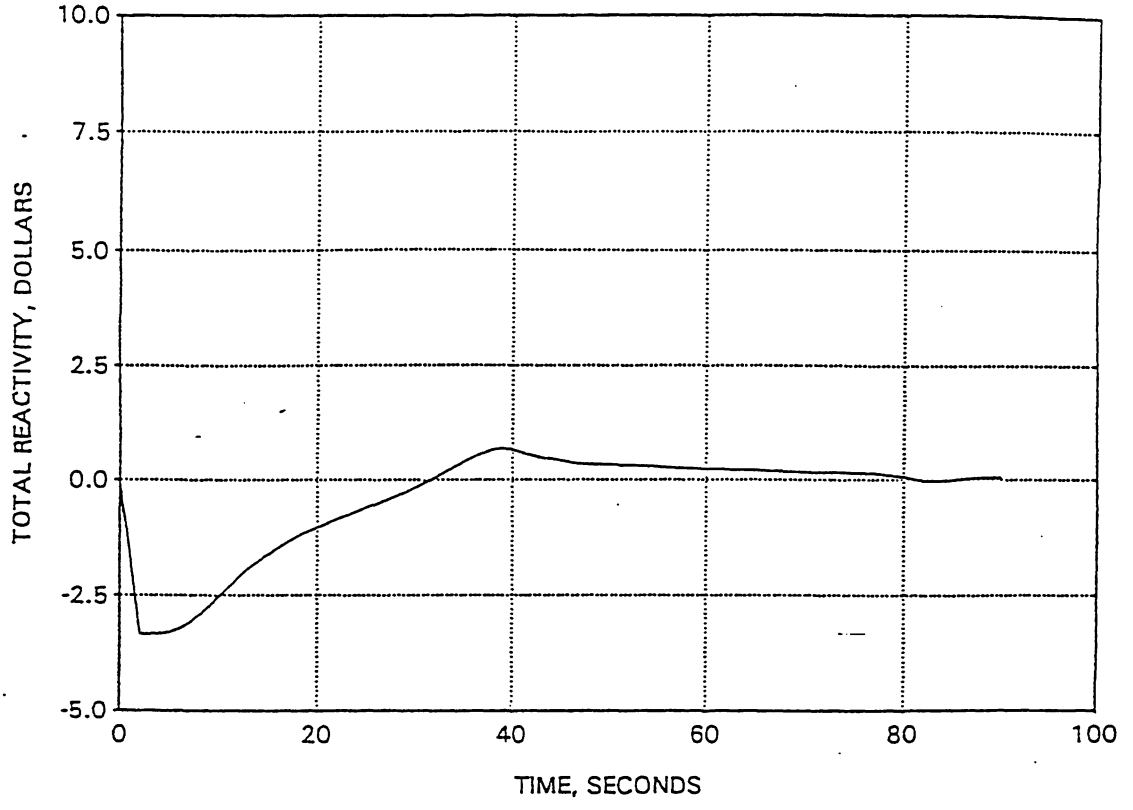

FIGURE 15.4.2-15

Sequoyah Steam Line Break Upstream of Flow Measuring Nozzle With Off-Site Power (Case B) Reactivity

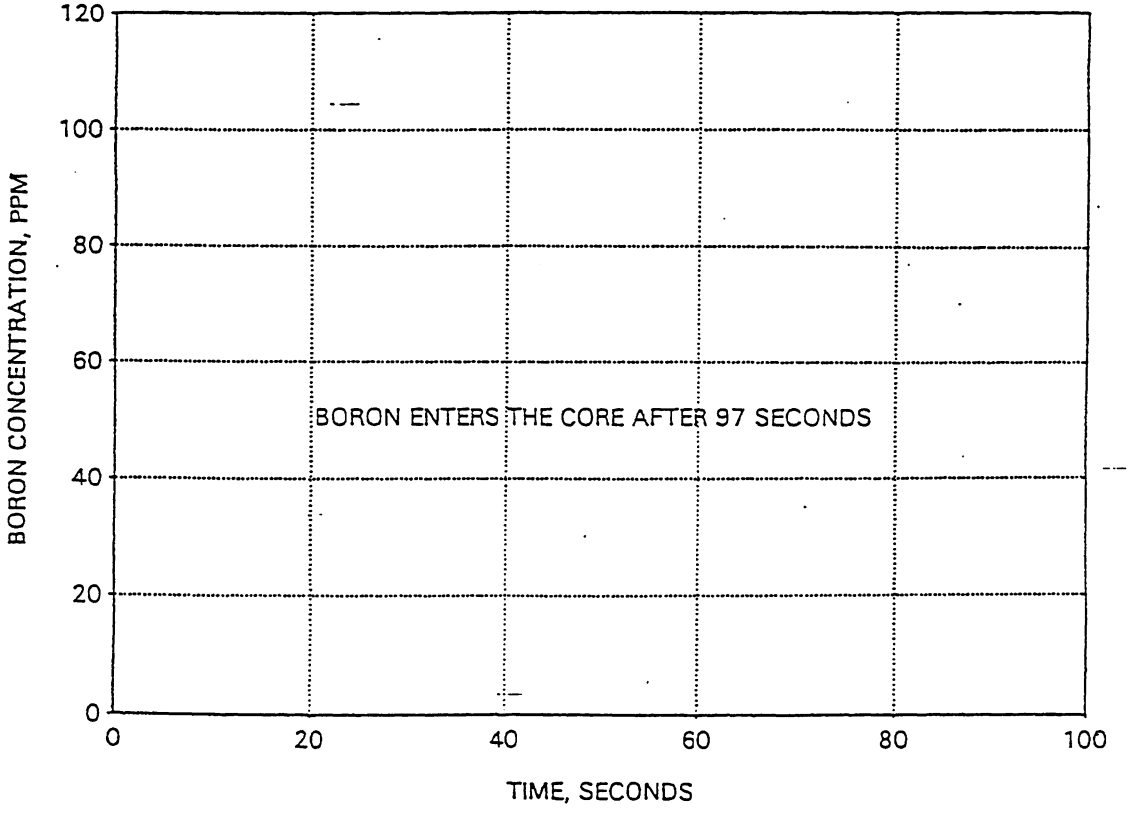

FIGURE 15.4.2-16

Sequoyah Steam Line Break Upstream of Flow Measuring Nozzle
With Off-Site Power (Case B)
Core Boron

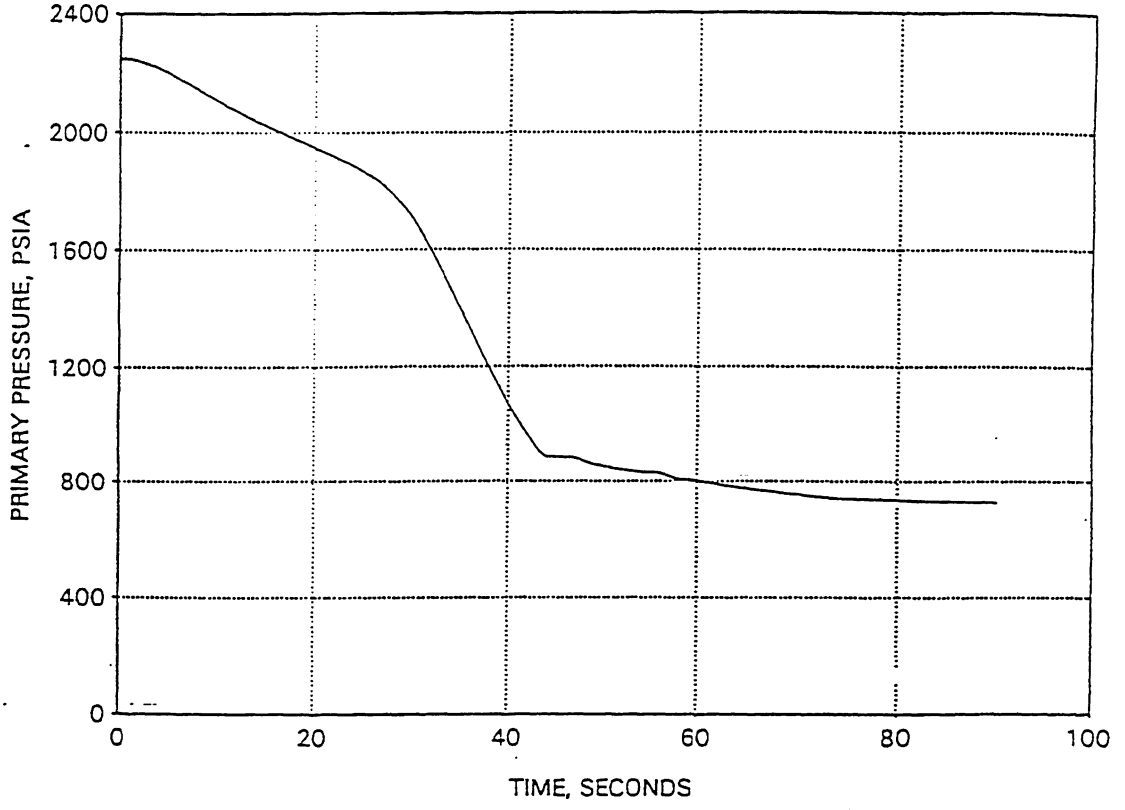

FIGURE 15.4.2-17

Sequoyah Steam Line Break Upstream of Flow Measuring Nozzle With Off-Site Power (Case B) System Pressure

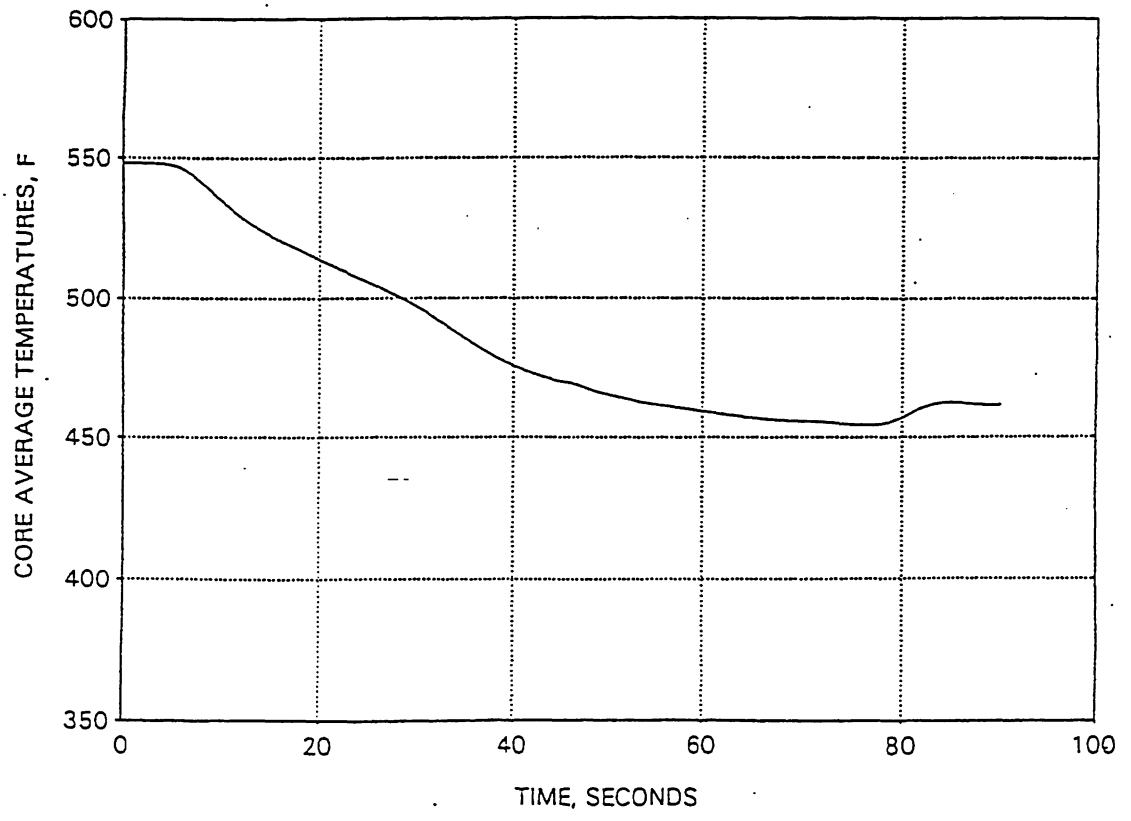

FIGURE 15.4.2-18

Sequoyah Steam Line Break Upstream of Flow Measuring Nozzle
With Off-Site Power (Case B)
Core Average Temperature

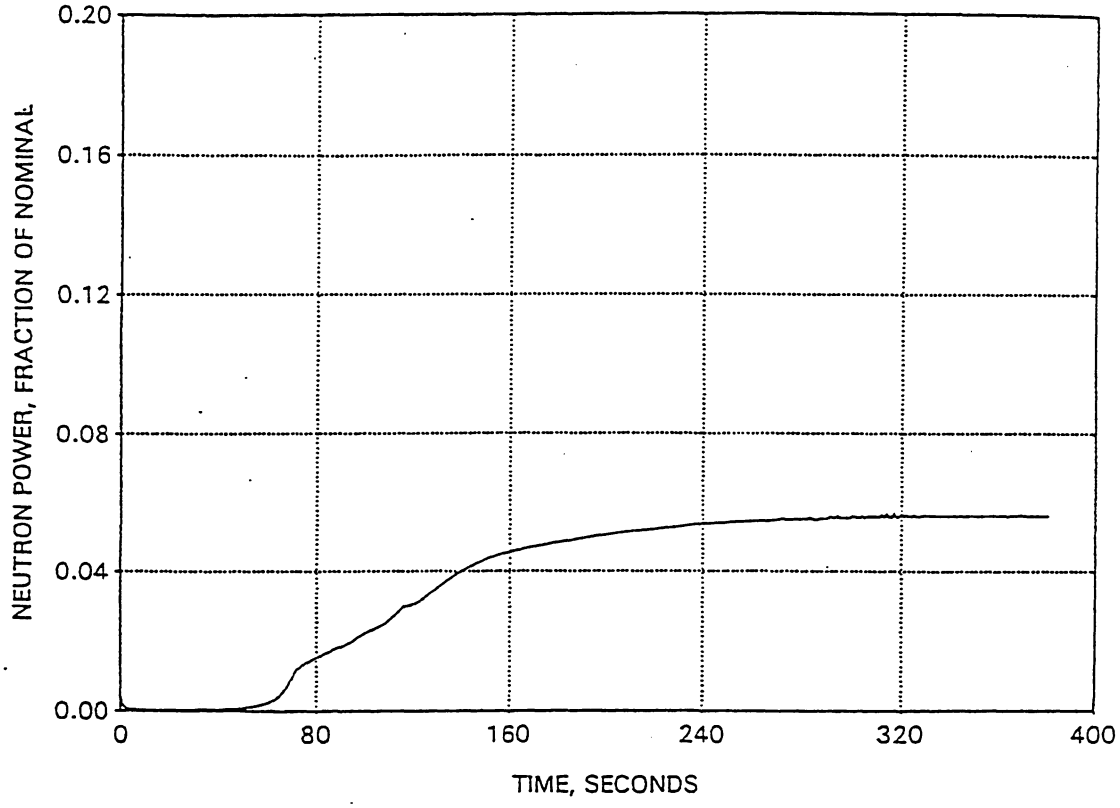

FIGURE 15.4.2-19

Sequoyah Steam Line Break Downstream of Flow Measuring Nozzle Without Off-Site Power (Case C) Neutron Power

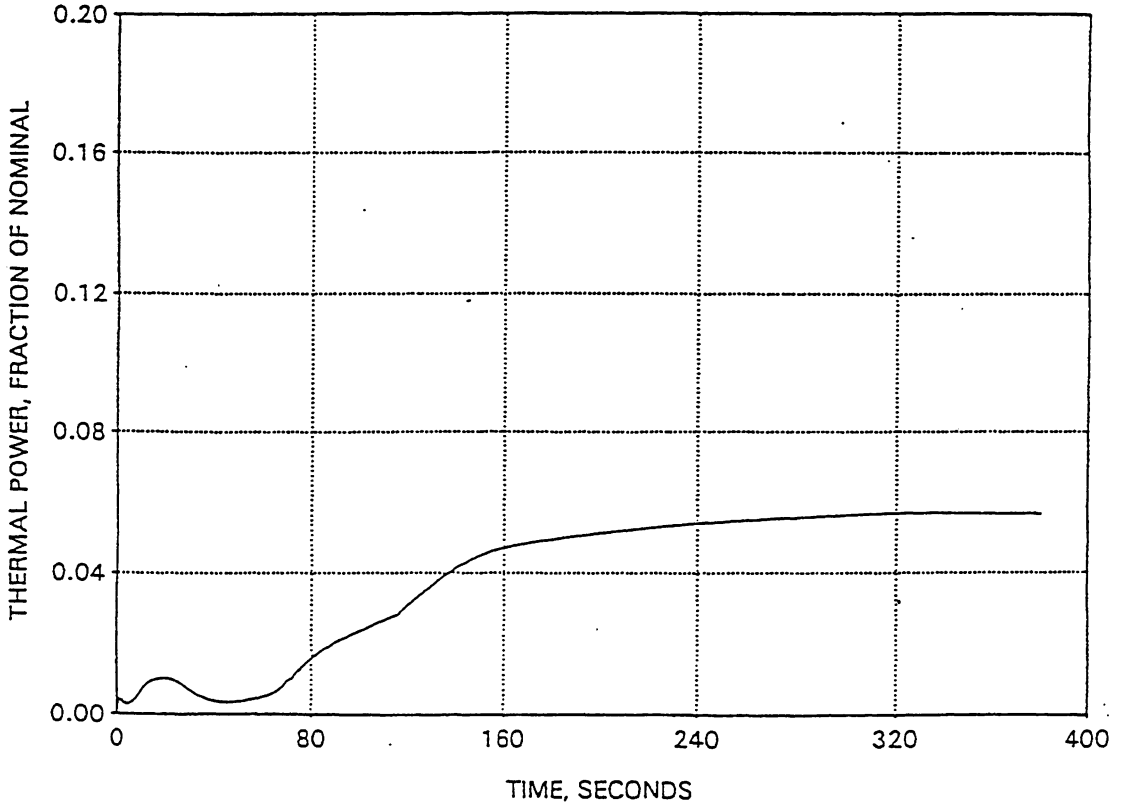

FIGURE 15.4.2-20

Sequoyah Steam Line Break Downstream of Flow Measuring Nozzle Without Off-Site Power (Case C) Thermal Power

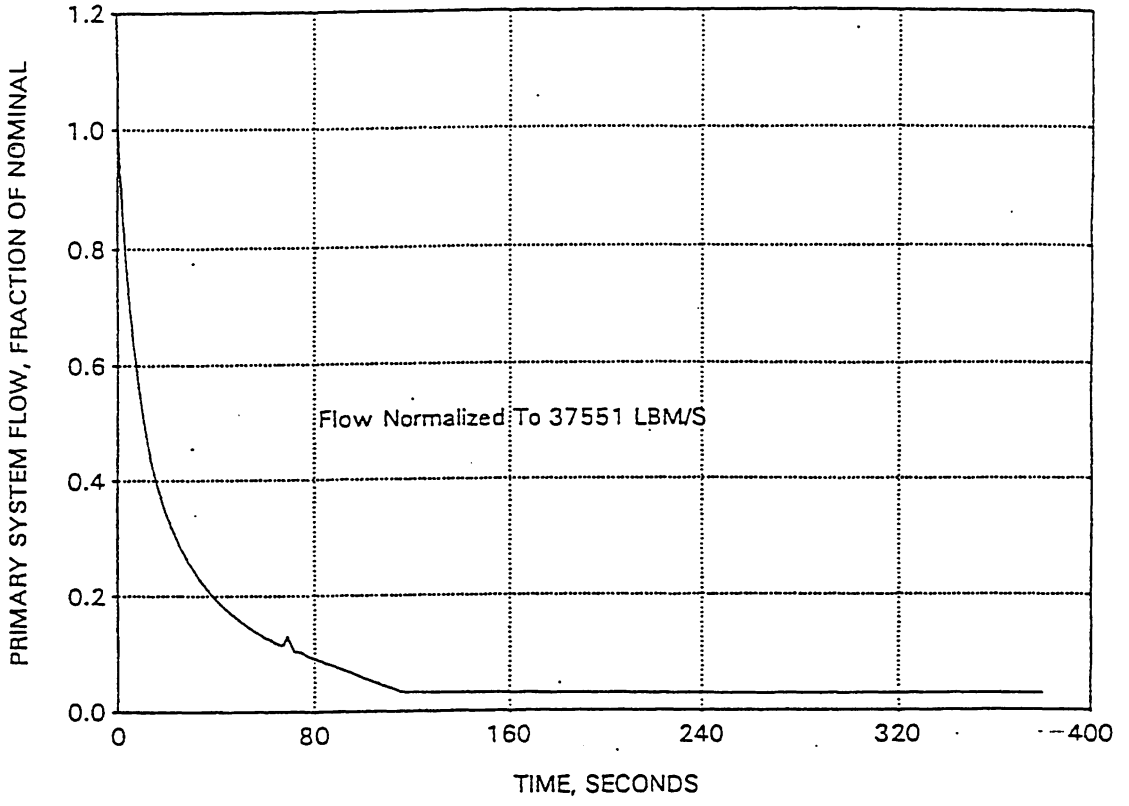

FIGURE 15.4.2-21

Sequoyah Steam Line Break Downstream of Flow Measuring Nozzle
Without Off-Site Power (Case C)
RCS Flow

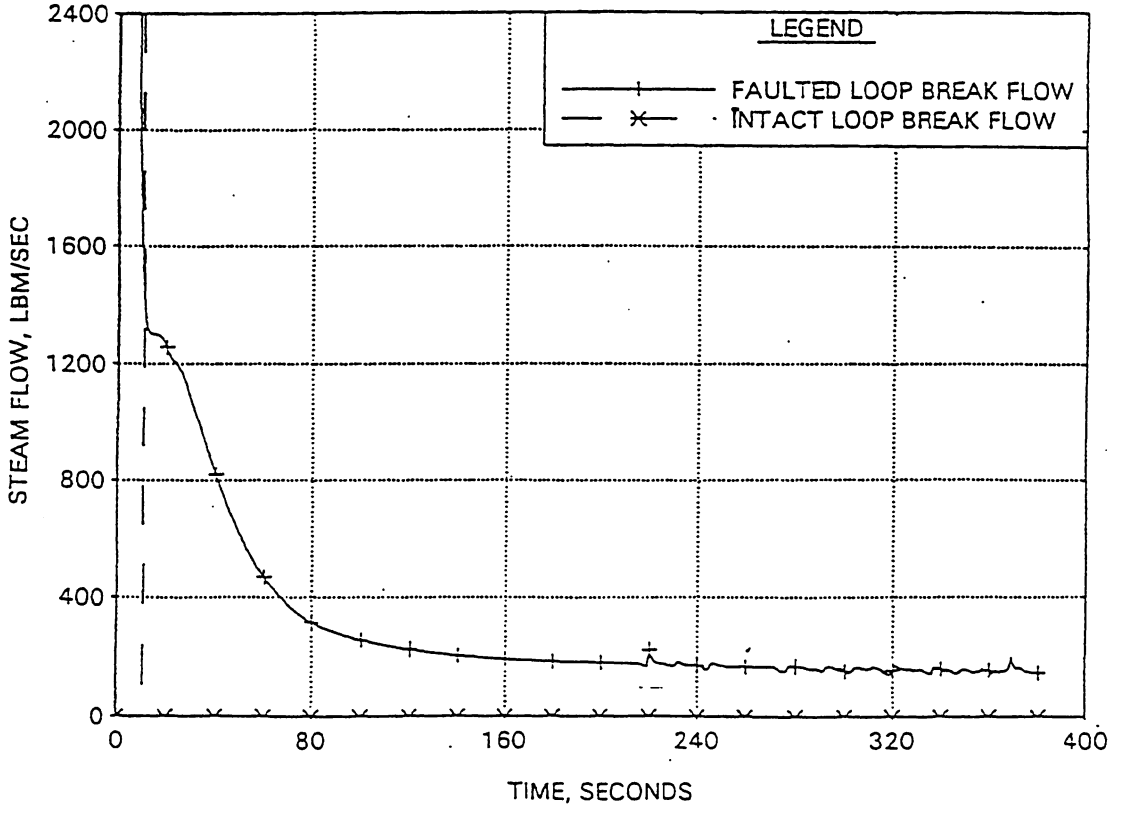

FIGURE 15.4.2-22

Sequoyah Steam Line Break Downstream of Flow Measuring Nozzle Without Off-Site Power (Case C) Steam Flow

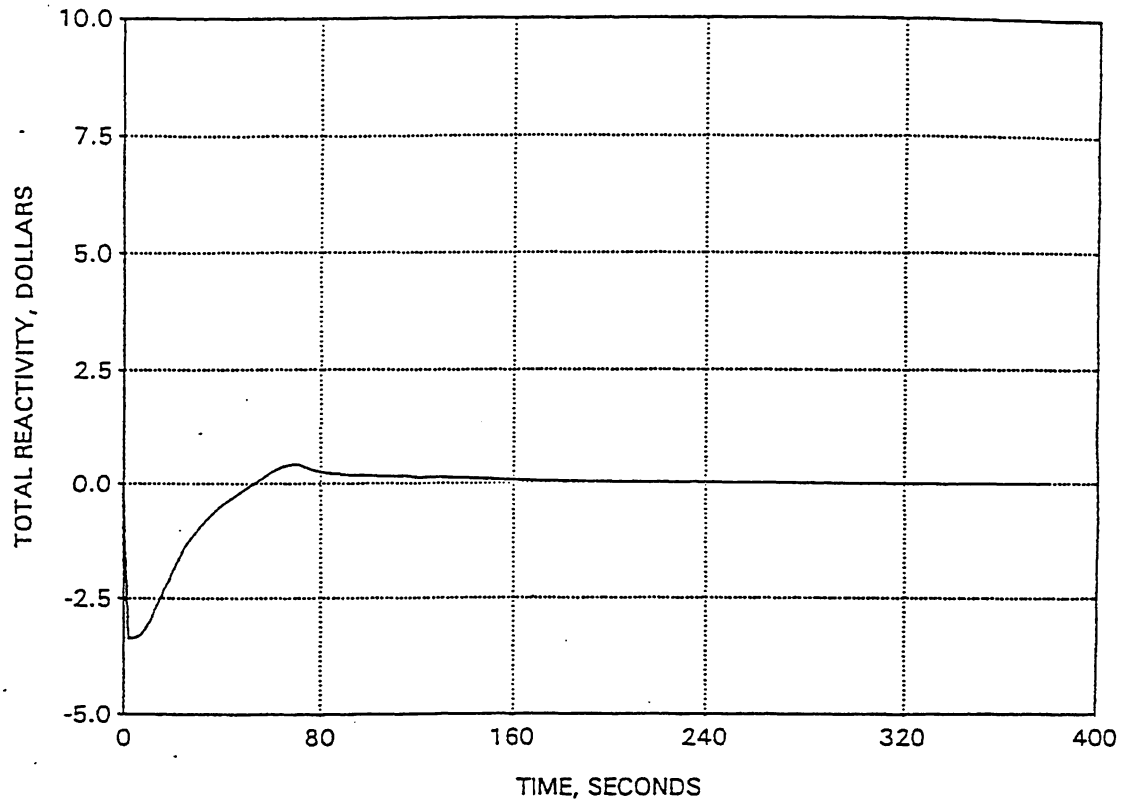

FIGURE 15.4.2-23

Sequoyah Steam Line Break Downstream of Flow Measuring Nozzle Without Off-Site Power (Case C) Reactivity

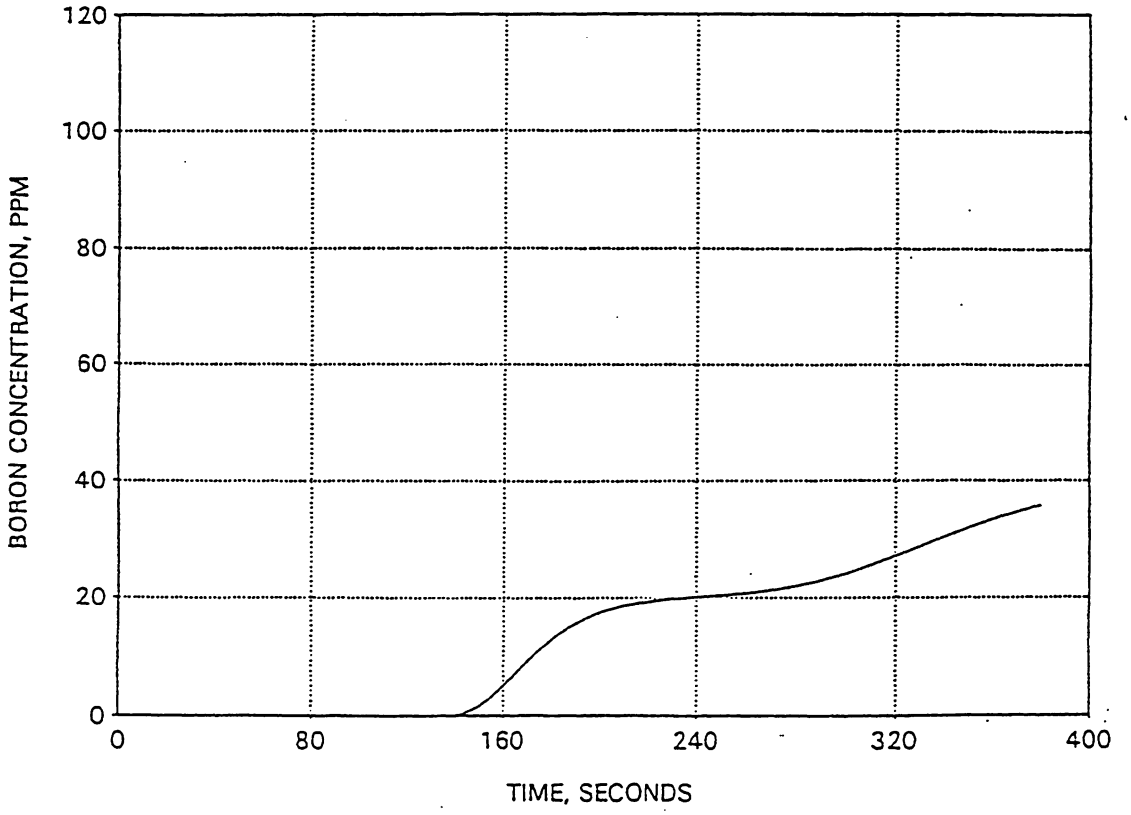

FIGURE 15.4.2-24

Sequoyah Steam Line Break Downstream of Flow Measuring Nozzle Without Off-Site Power (Case C) Core Boron

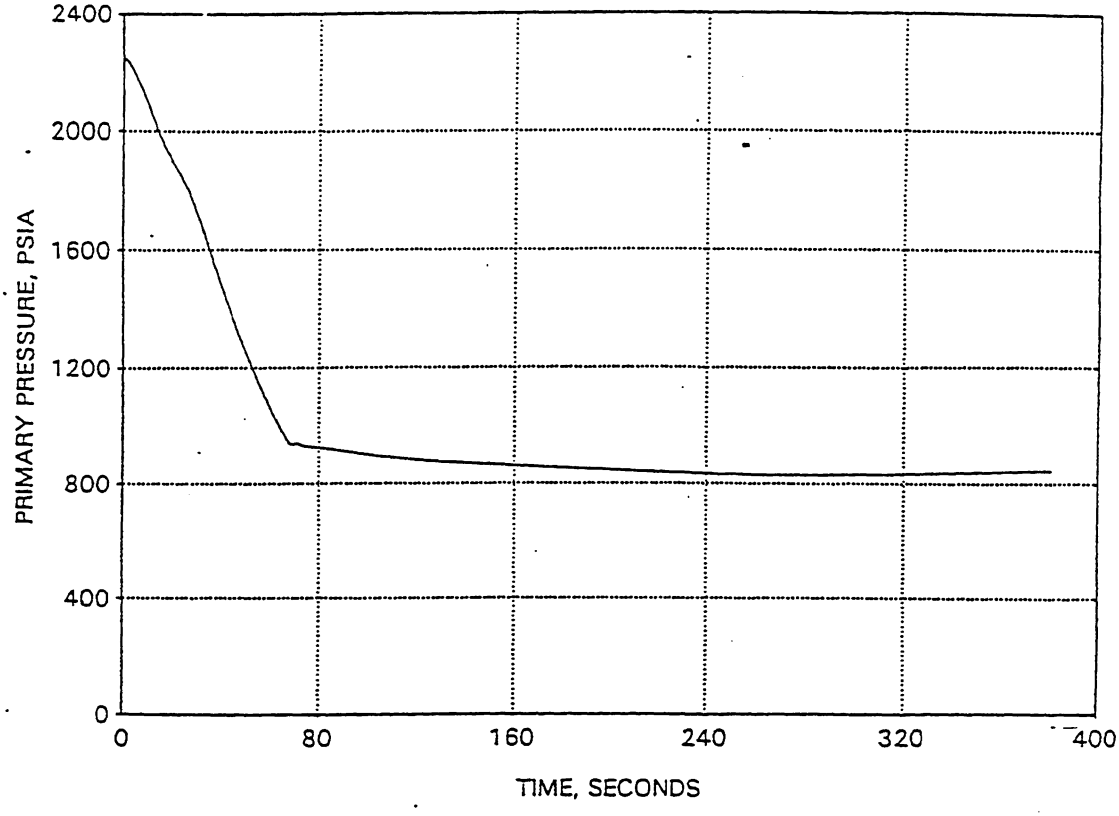

FIGURE 15.4.2-25

Sequoyah Steam Line Break Downstream of Flow Measuring Nozzle Without Off-Site Power (Case C) System Pressure

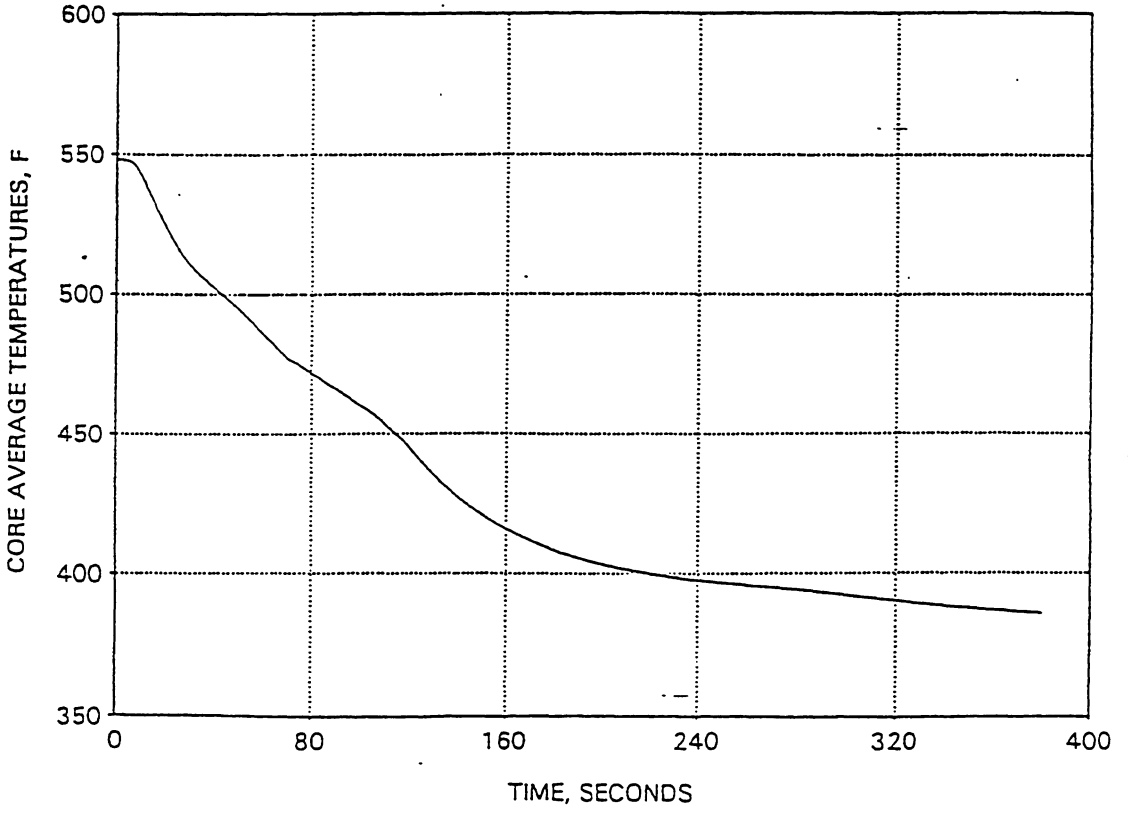

FIGURE 15.4.2-26

Sequoyah Steam Line Break Downstream of Flow Measuring Nozzle Without Off-Site Power (Case C) Core Average Temperature

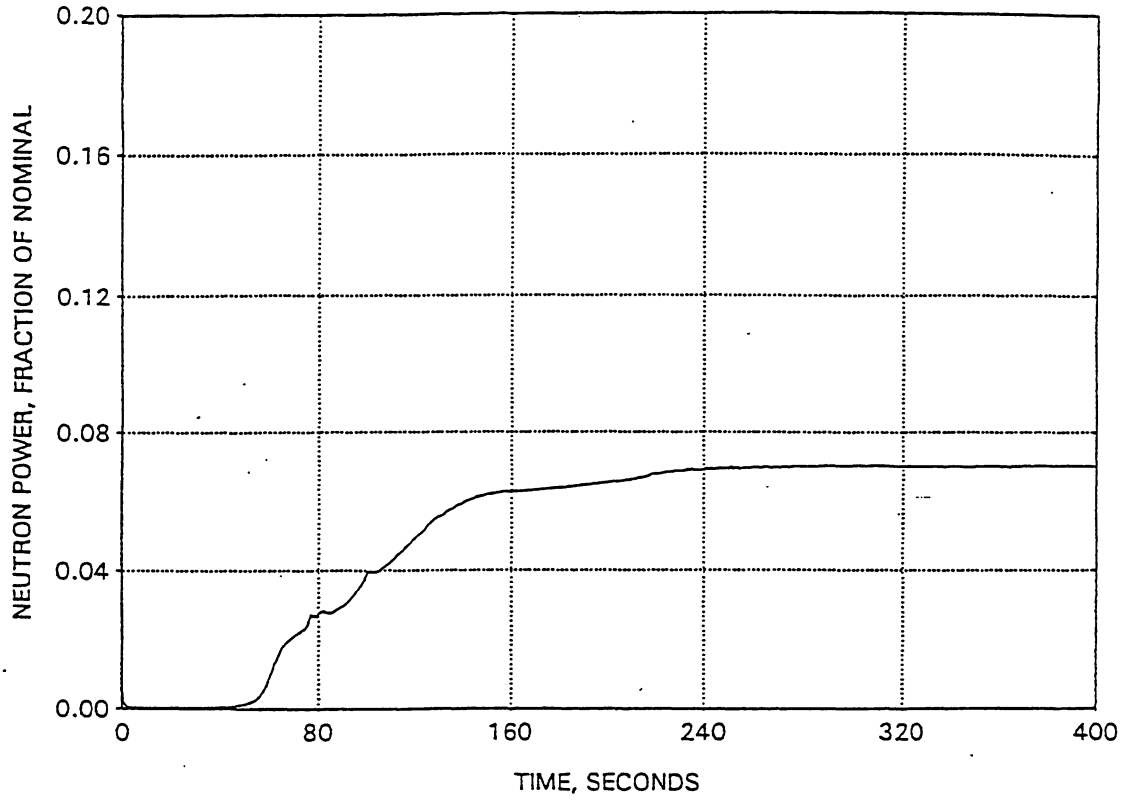

FIGURE 15.4.2-27

Sequoyah Steam Line Break Upstream of Flow Measuring Nozzle Without Off-Site Power (Case D) Neutron Power

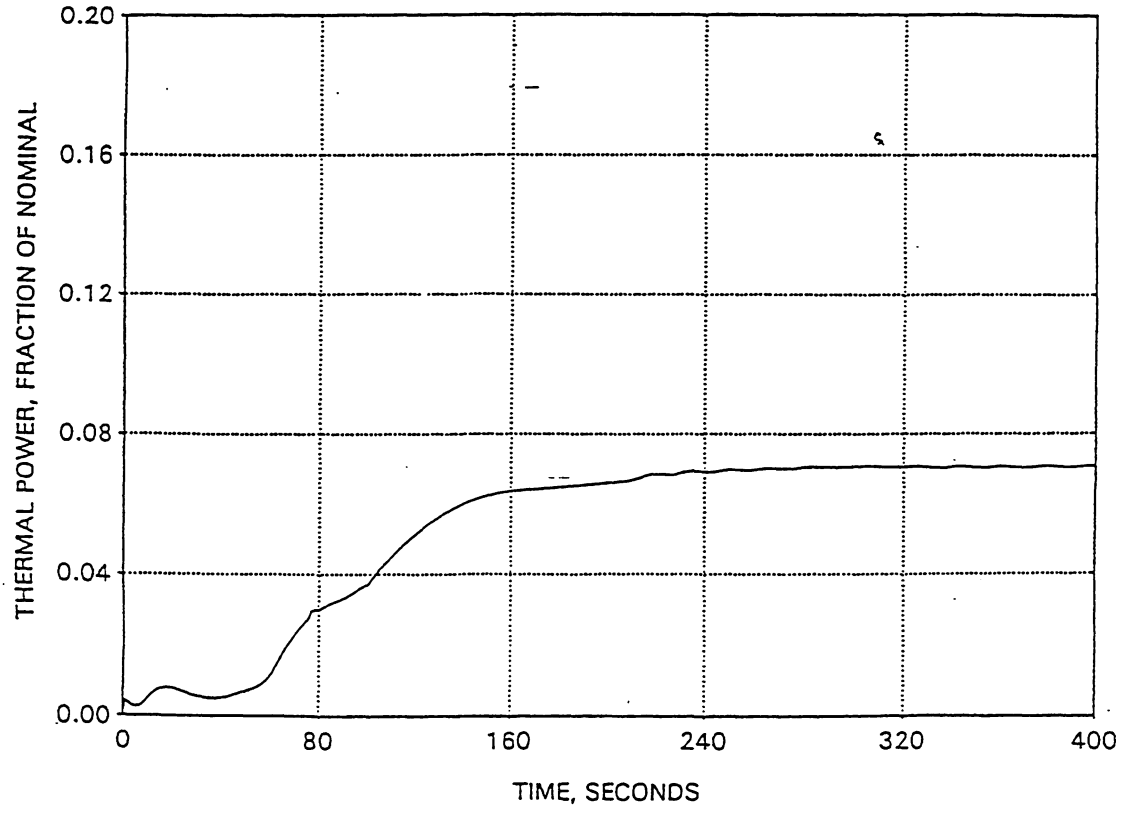

FIGURE 15.4.2-28

Sequoyah Steam Line Break Upstream of Flow Measuring Nozzle Without Off-Site Power (Case D) Thermal Power

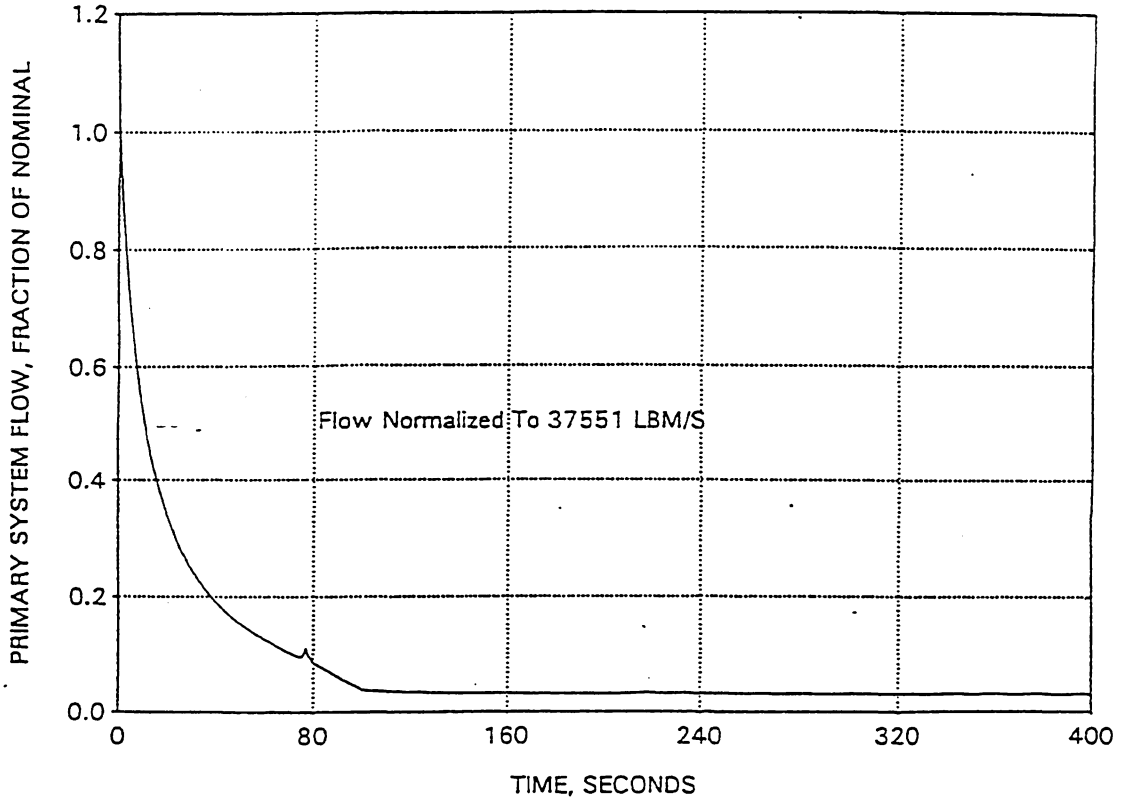

FIGURE 15.4.2-29

Sequoyah Steam Line Break Upstream of Flow Measuring Nozzle Without Off-Site Power (Case D) RCS Flow

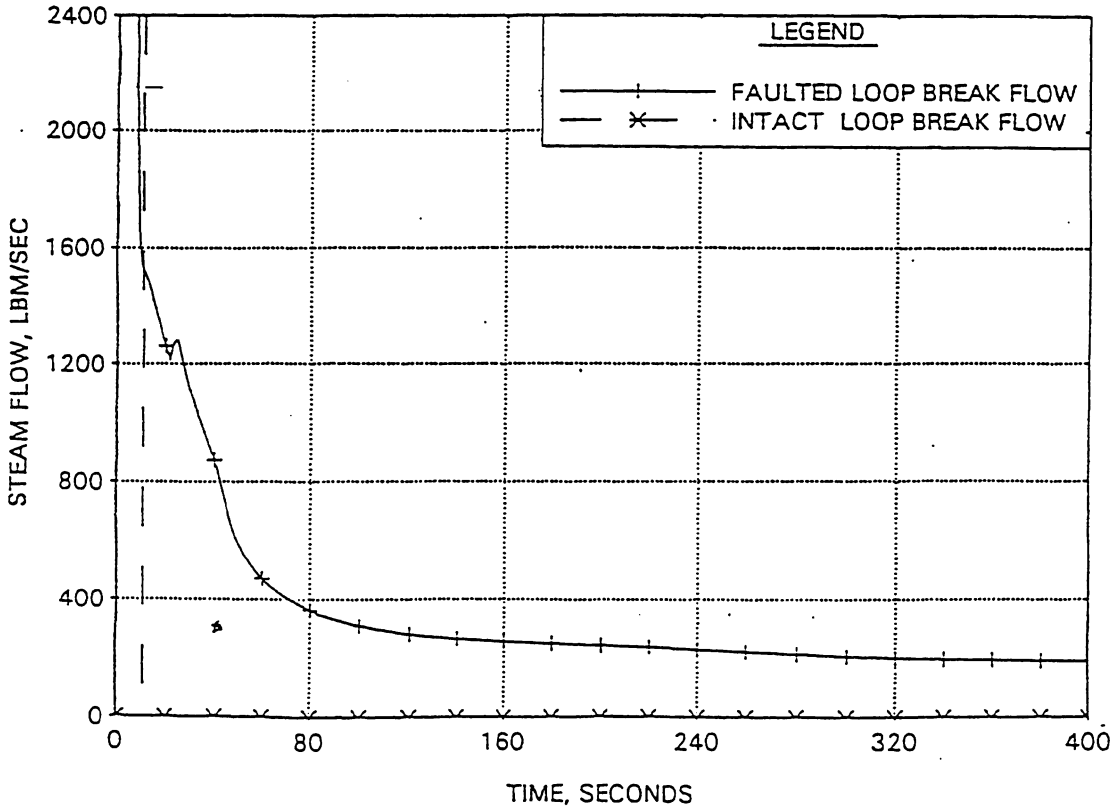

FIGURE 15.4.2-30

Sequoyah Steam Line Break Upstream of Flow Measuring Nozzle Without Off-Site Power (Case D) Steam Flow

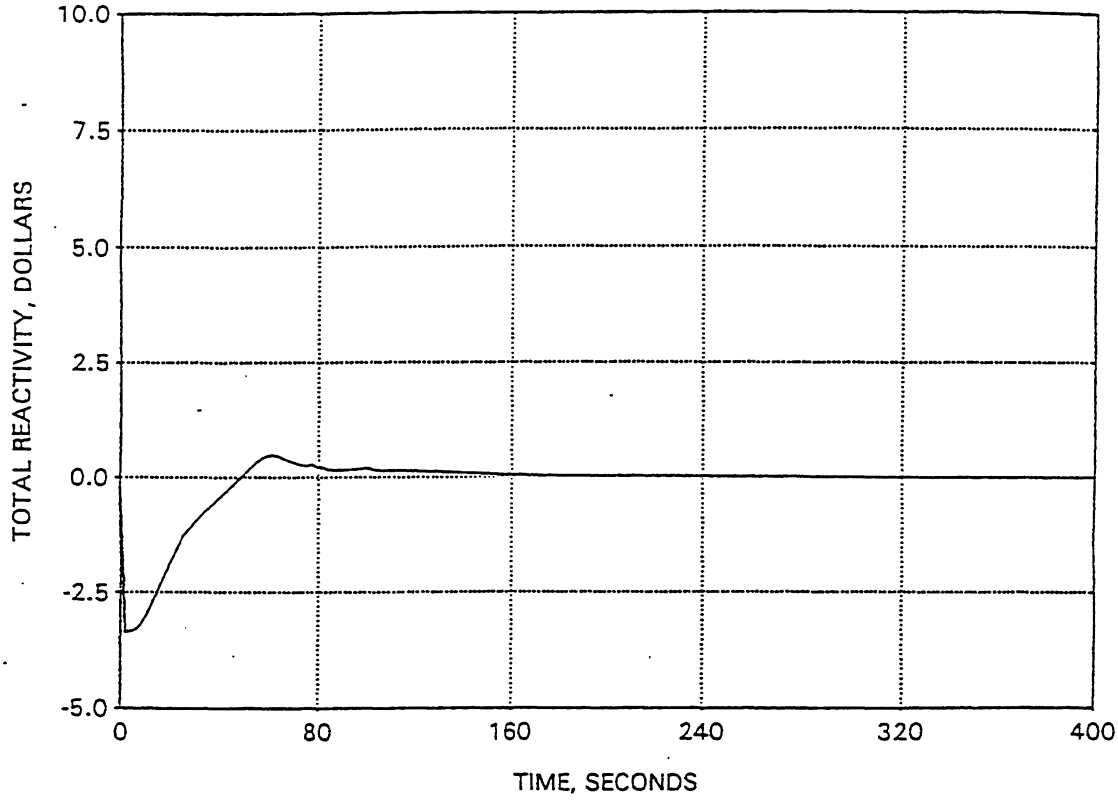

FIGURE 15.4.2-31

Sequoyah Steam Line Break Upstream of Flow Measuring Nozzle Without Off-Site Power (Case D) Reactivity

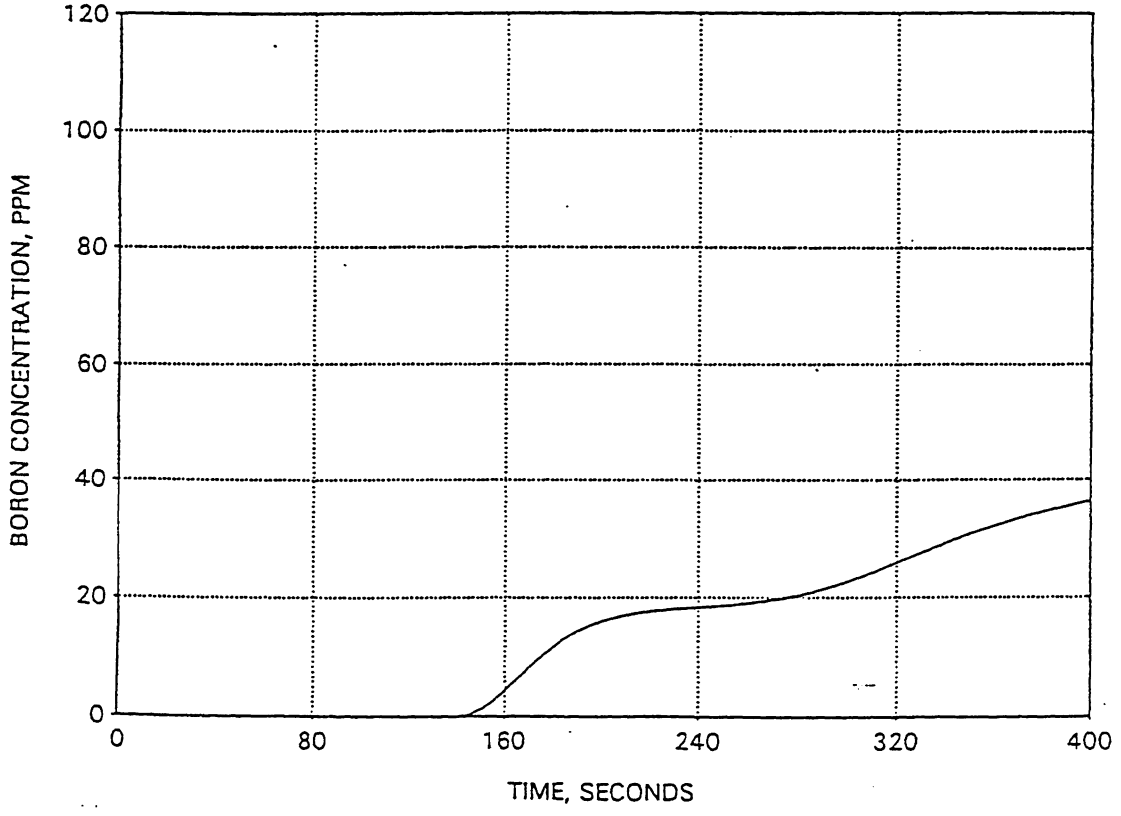

FIGURE 15.4.2-32

Sequoyah Steam Line Break Upstream of Flow Measuring Nozzle Without Off-Site Power (Case D) Core Boron

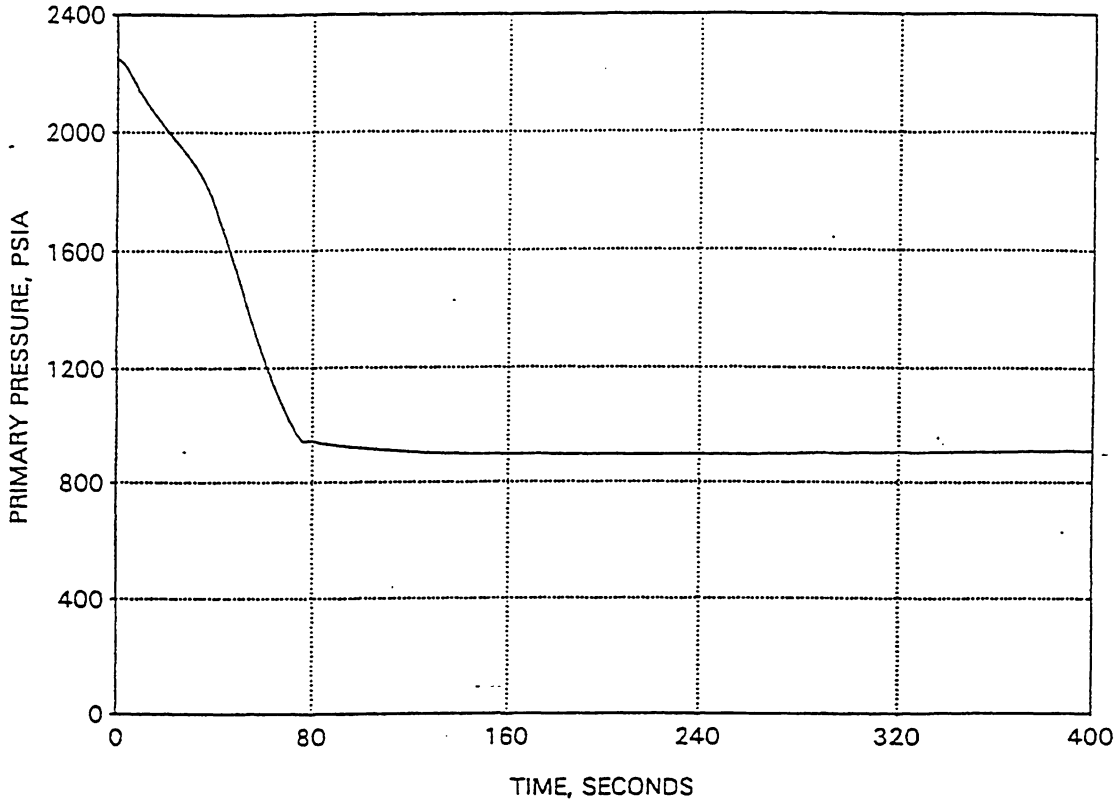

FIGURE 15.4.2-33

Sequoyah Steam Line Break Upstream of Flow Measuring Nozzle Without Off-Site Power (Case D) System Pressure

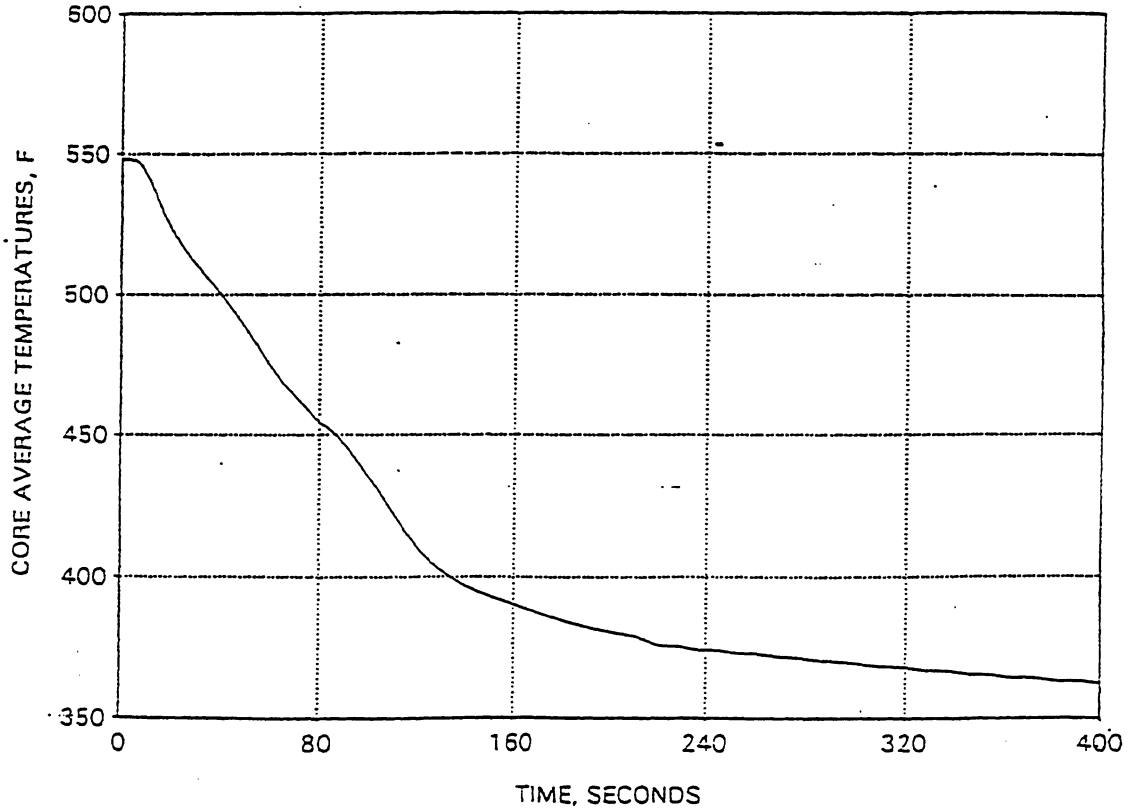

FIGURE 15.4.2-34

Sequoyah Steam Line Break Upstream of Flow Measuring Nozzle
Without Off-Site Power (Case D)
Core Average Temperature

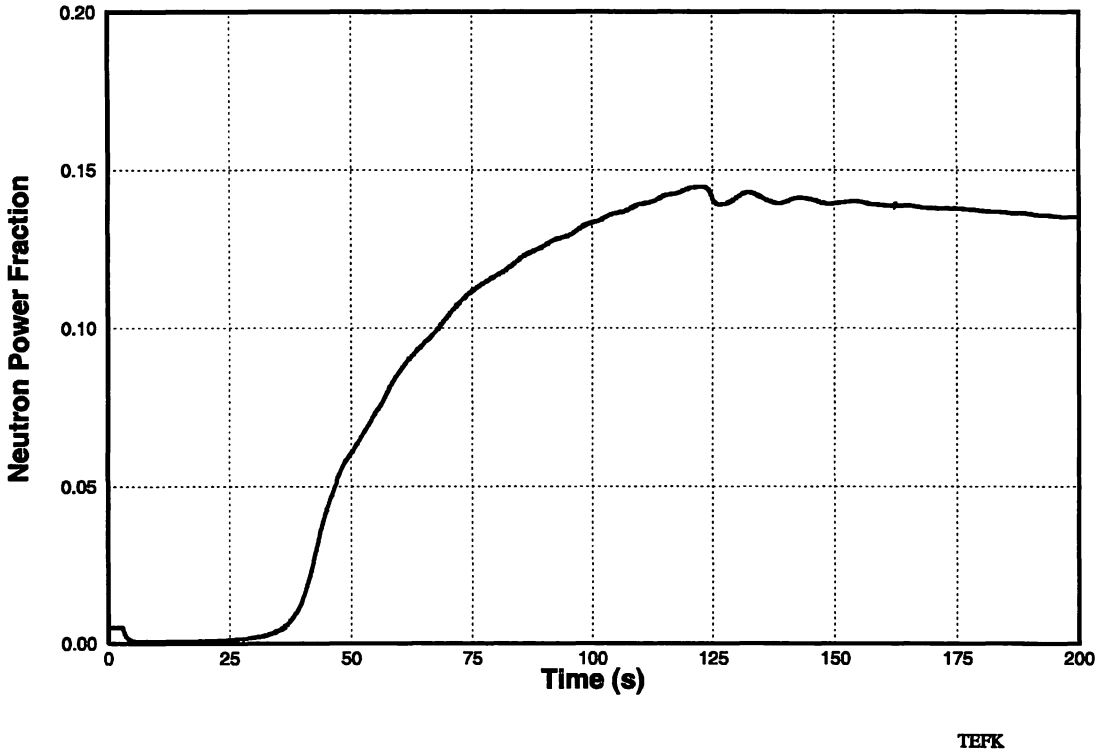

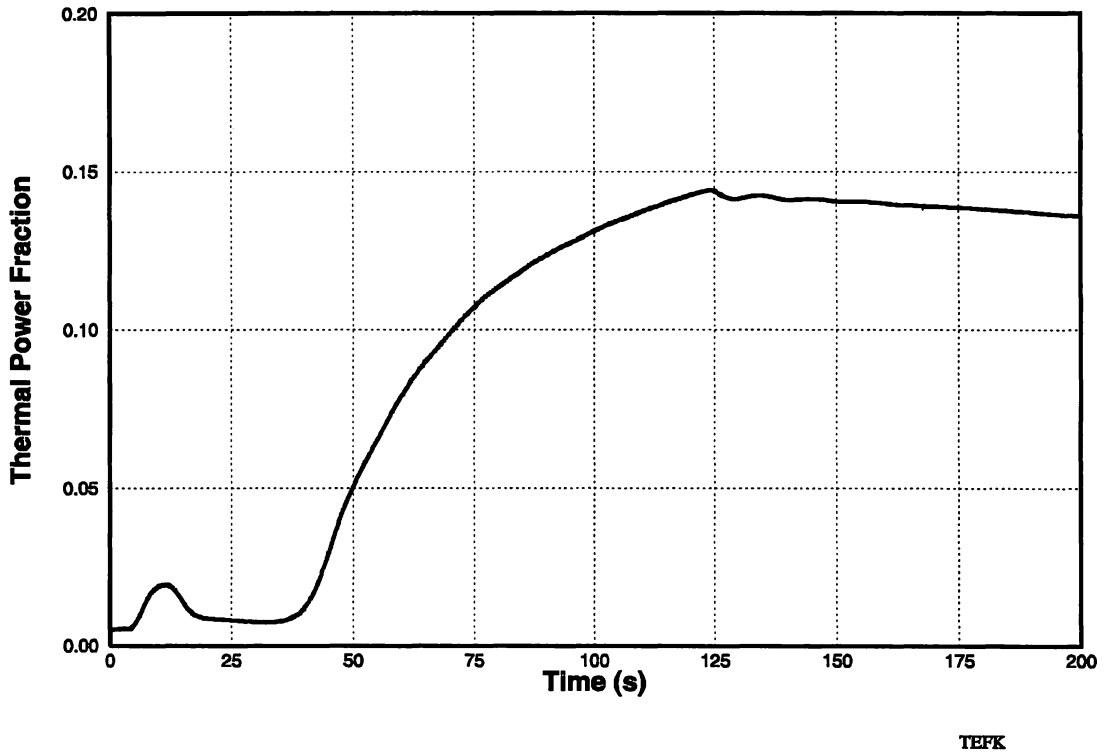

Figure 15.4.2-35
Sequoyah Steam Line Break Downstream of RSG Outlet Nozzle
With Off-Site Power (RSG – Case B)
Neutron Power, Thermal Power vs Time

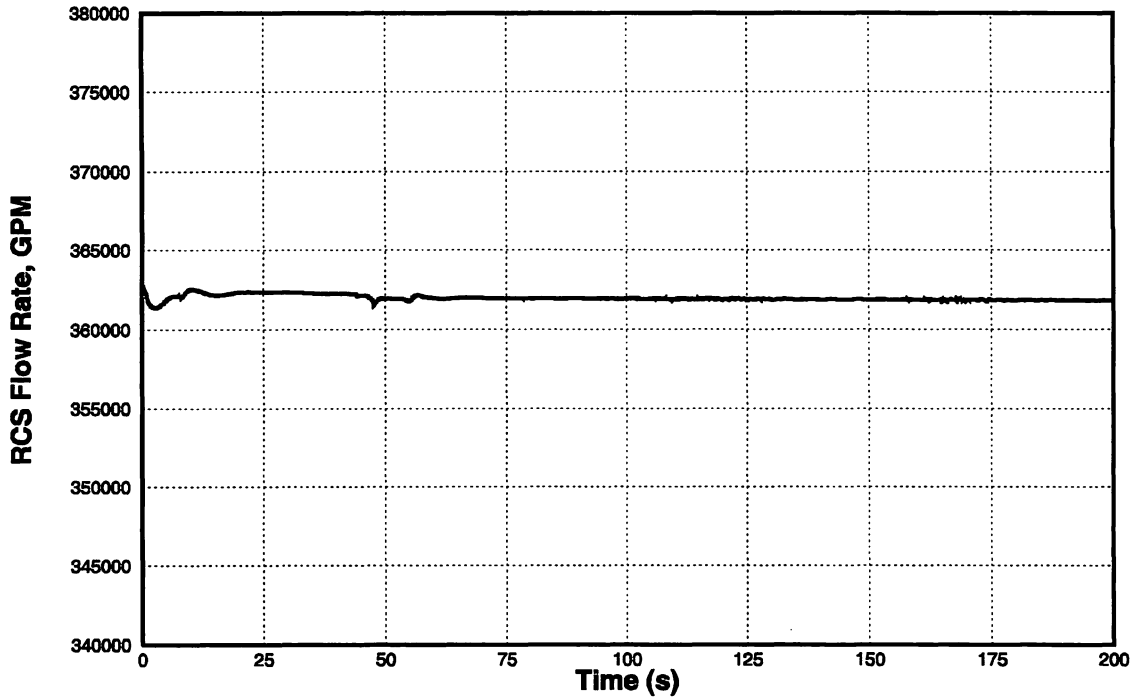

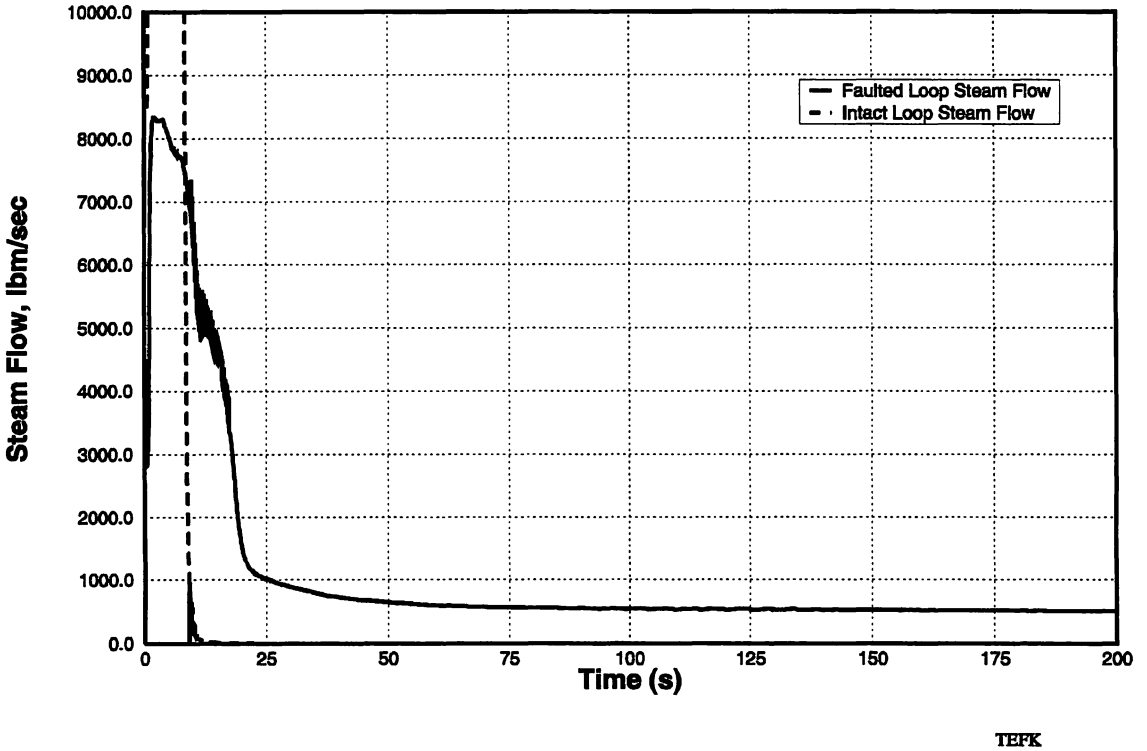

Figure 15.4.2-36
Sequoyah Steam Line Break Downstream of RSG Outlet Nozzle
With Off-Site Power (RSG – Case B)
RCS Flow Rate, Steam Flow vs Time

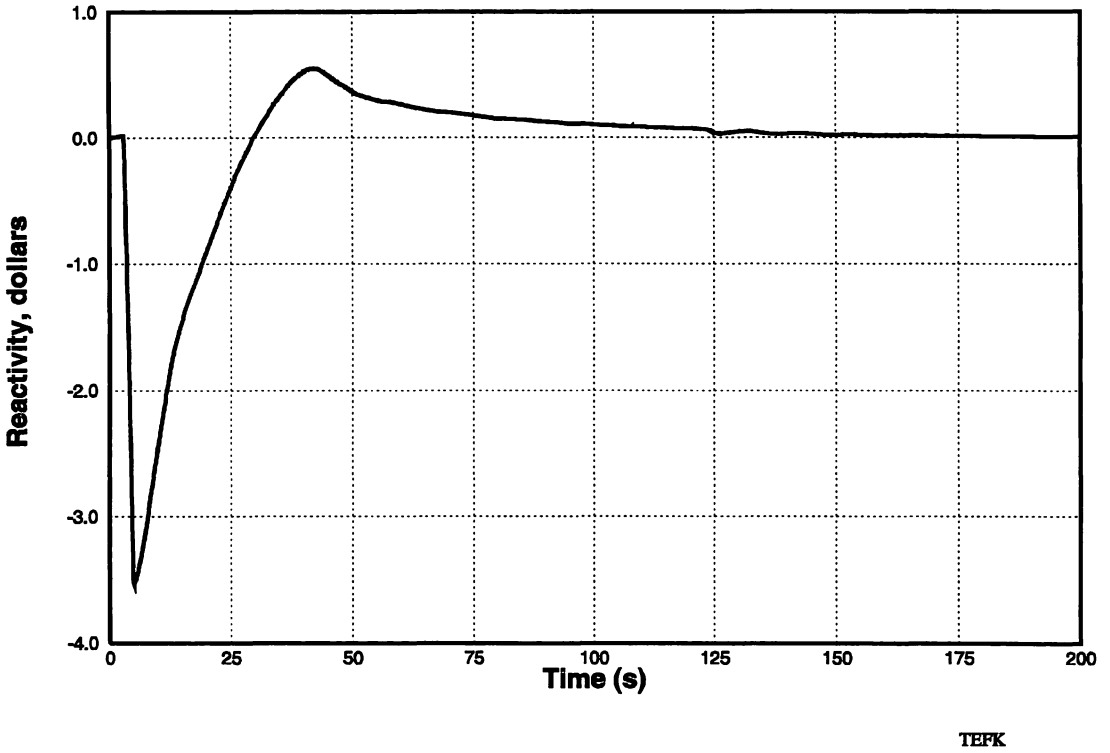

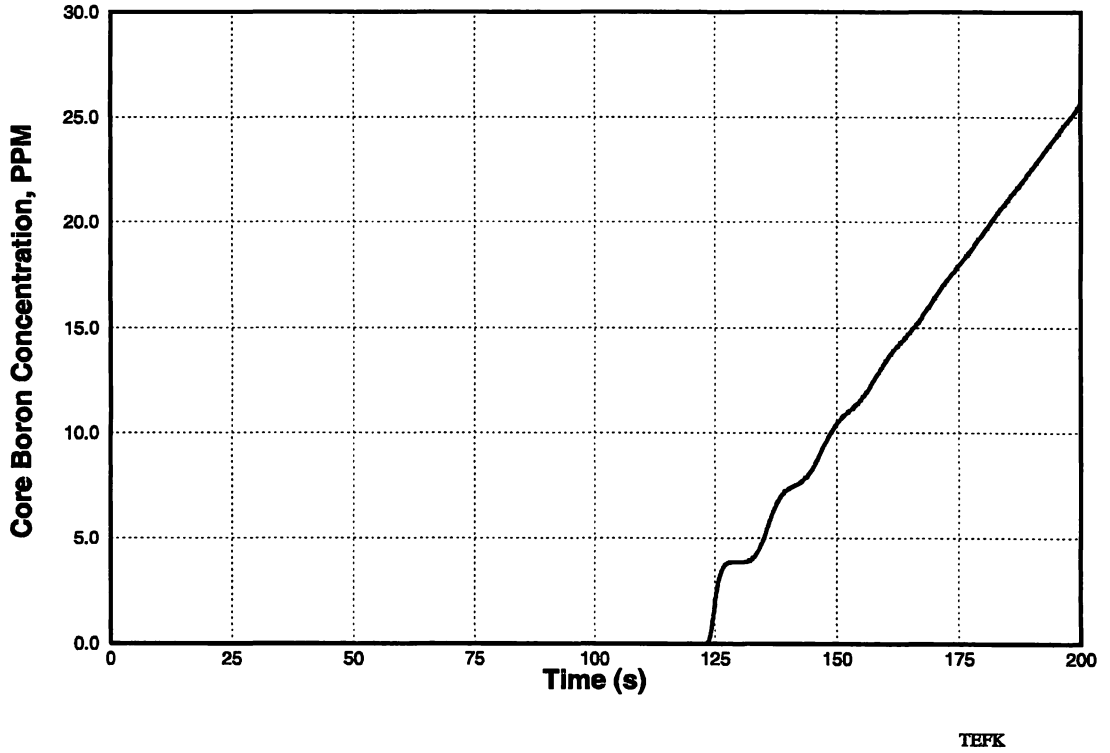

Figure 15.4.2-37
Sequoyah Steam Line Break Downstream of RSG Outlet Nozzle
With Off-Site Power (RSG – Case B)
Reactivity, Core Boron Concentration vs Time

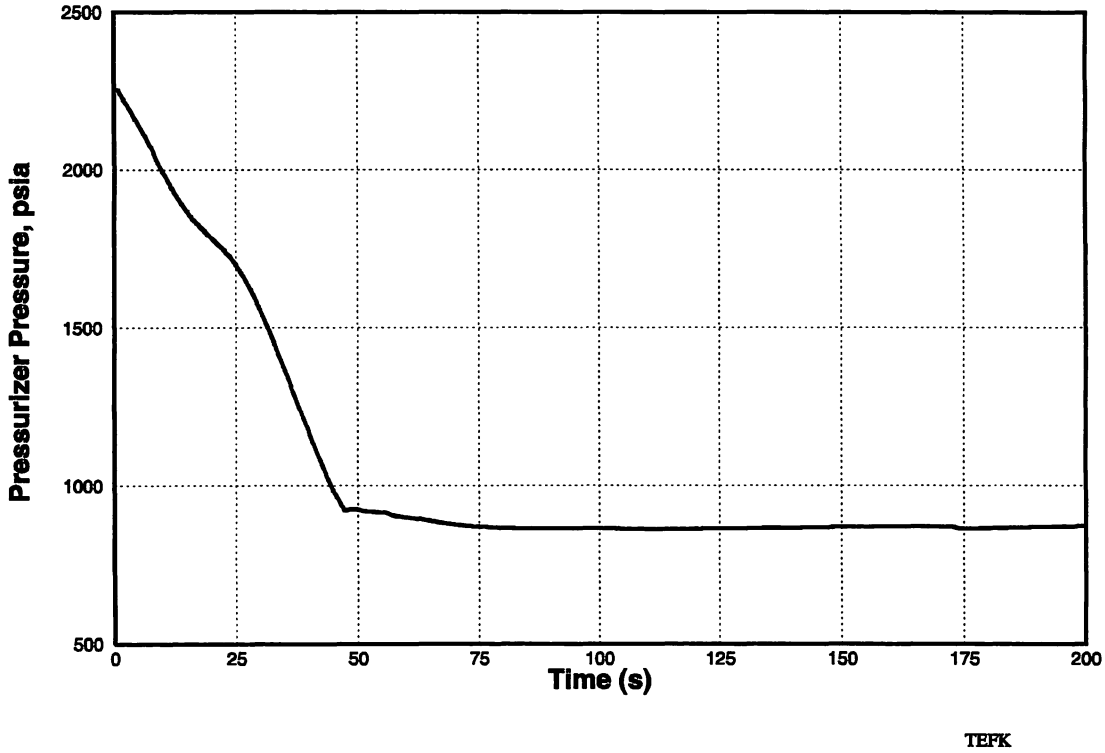

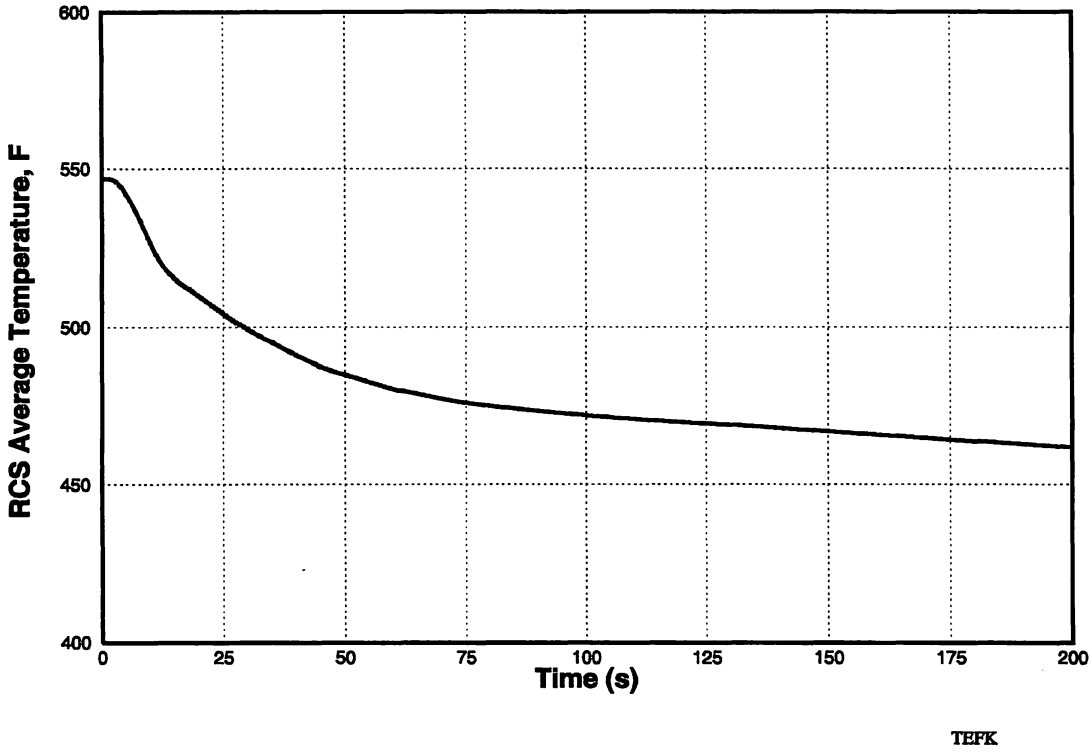

Figure 15.4.2-38
Sequoyah Steam Line Break Downstream of RSG Outlet Nozzle
With Off-Site Power (RSG – Case B)
Pressurizer Pressure, RCS Average Temperature vs Time

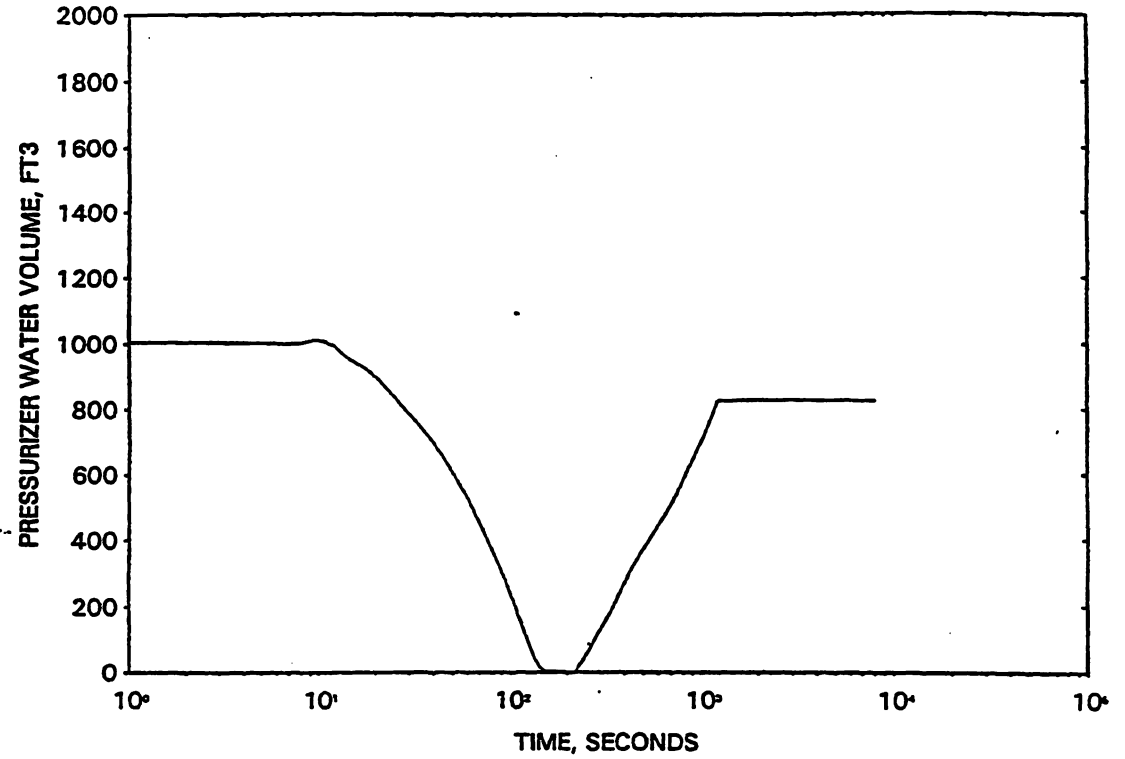

FIGURE 15.4.2-39a MAJOR RUPTURE OF A MFW PIPE - NO LOOP PRESSUREIZER WATER VOLUME

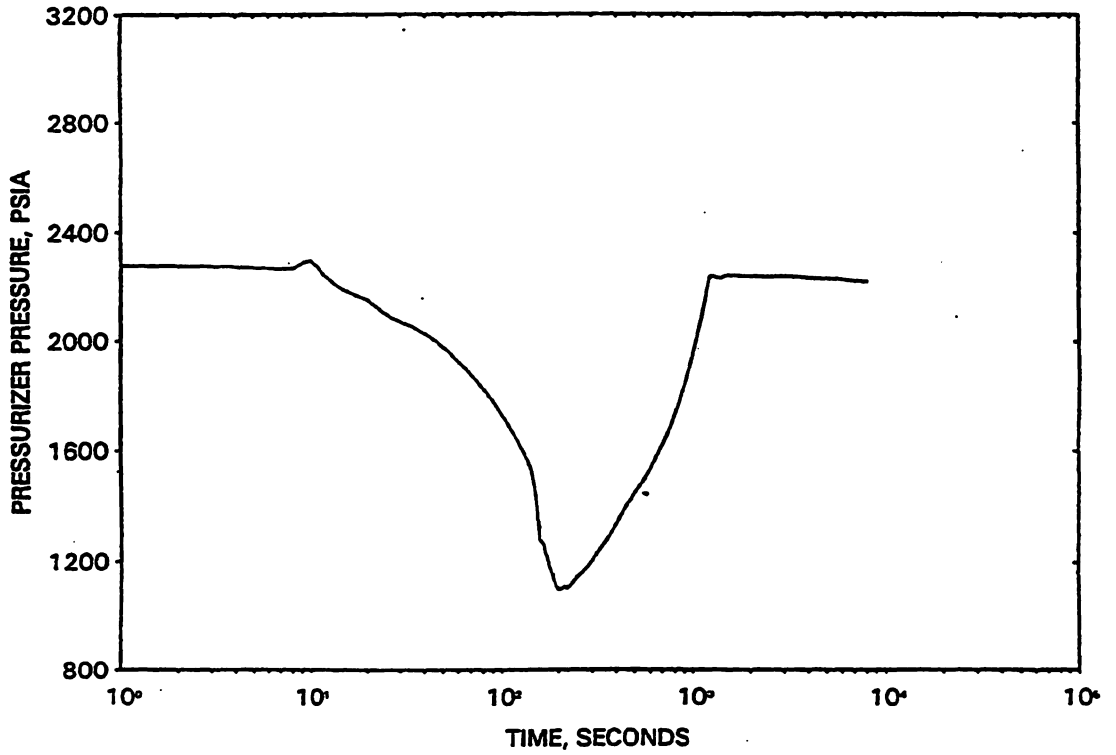

FIGURE 15.4.2-39b MAJOR RUPTURE OF A MFW PIPE - NO LOOP PRESSURIZER PRESSURE

Revised by Amendment 24

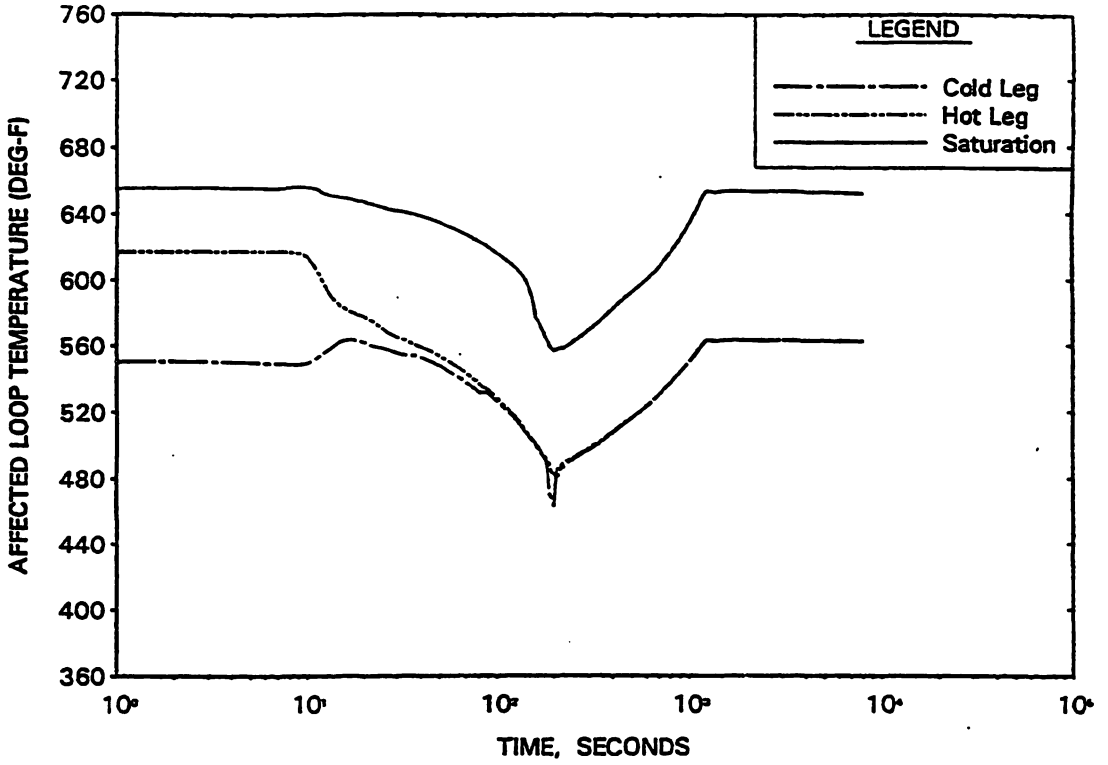

FIGURE 15.4.2-40a MAJOR RUPTURE OF A MFW PIPE - NO LOOP
LOOP 1 COLD LEG, HOT LEG AND SATURATION TEMPERATURES

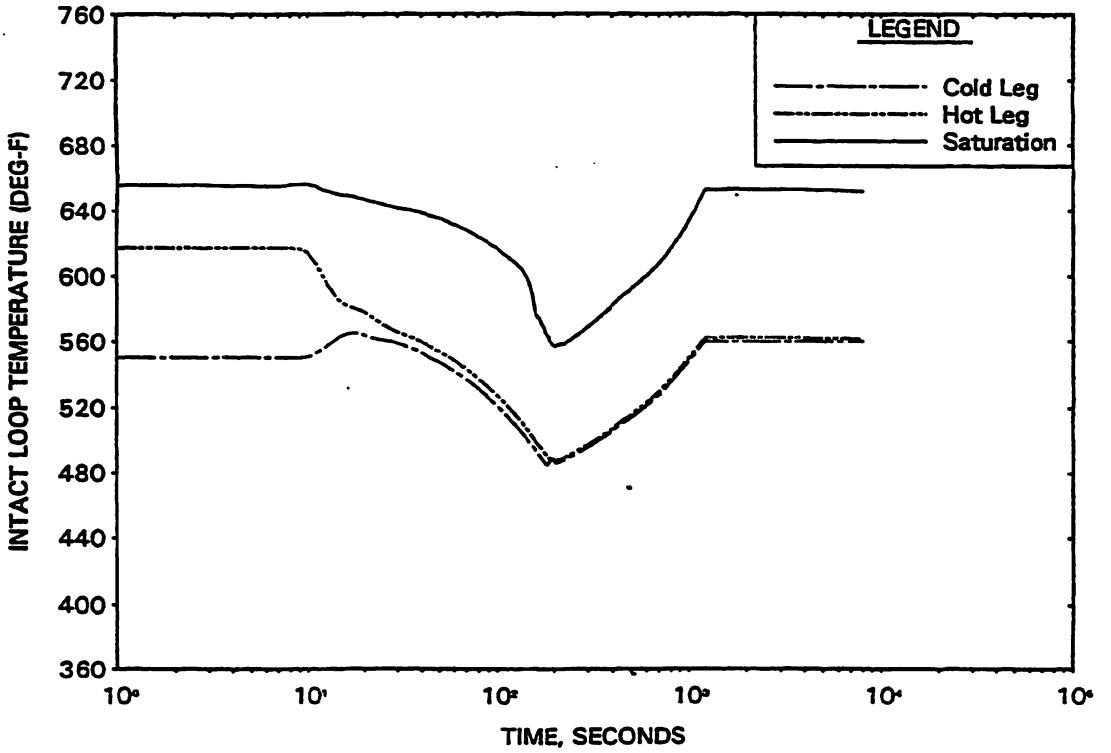

FIGURE 15.4.2-40b MAJOR RUPTURE OF A MFW PIPE - NO LOOP
INTACT LOOP COLD LEG, HOT LEG AND SATURATION TEMPERATURES

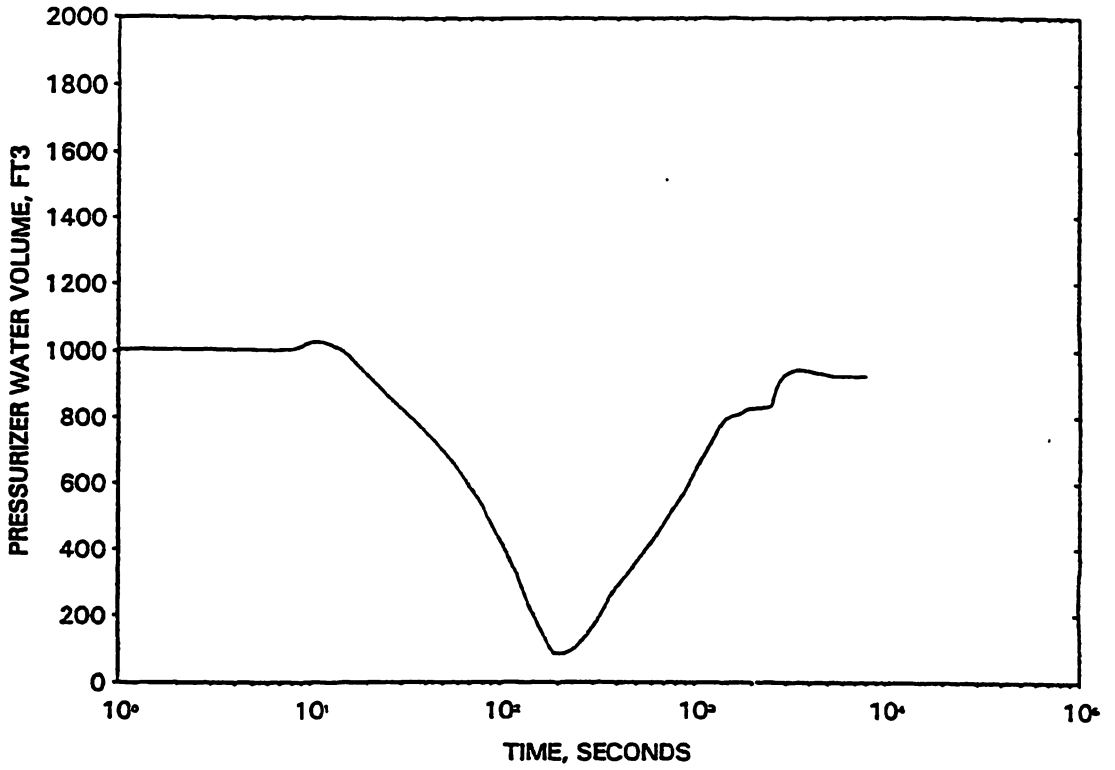

FIGURE 15.4.2-41a MAJOR RUPTURE OF A MFW PIPE - LOOP PRESSURIZER WATER VOLUME

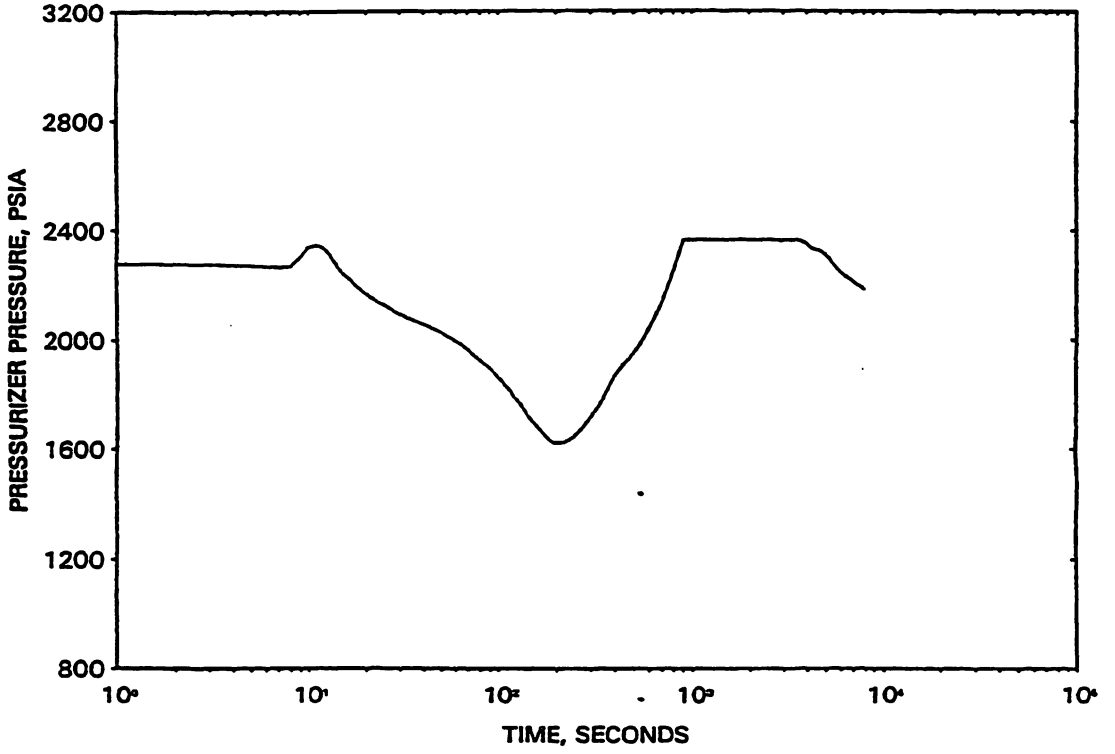

FIGURE 15.4.2-41b MAJOR RUPTURE OF A MFW PIPE - LOOP PRESSURIZER PRESSURE

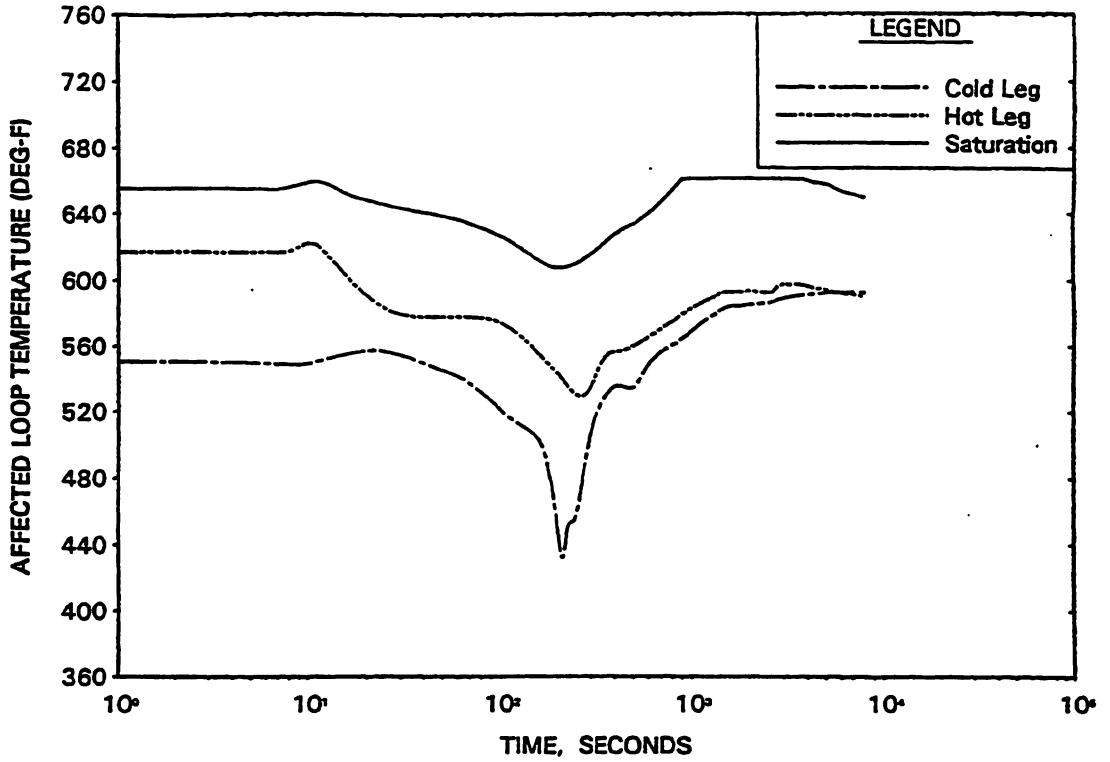

FIGURE 15.4.2-42a MAJOR RUPTURE OF A MFW PIPE - LOOP
AFFECTED LOOP COLD LEG, HOT LEG AND SATURATION TEMPERATURES

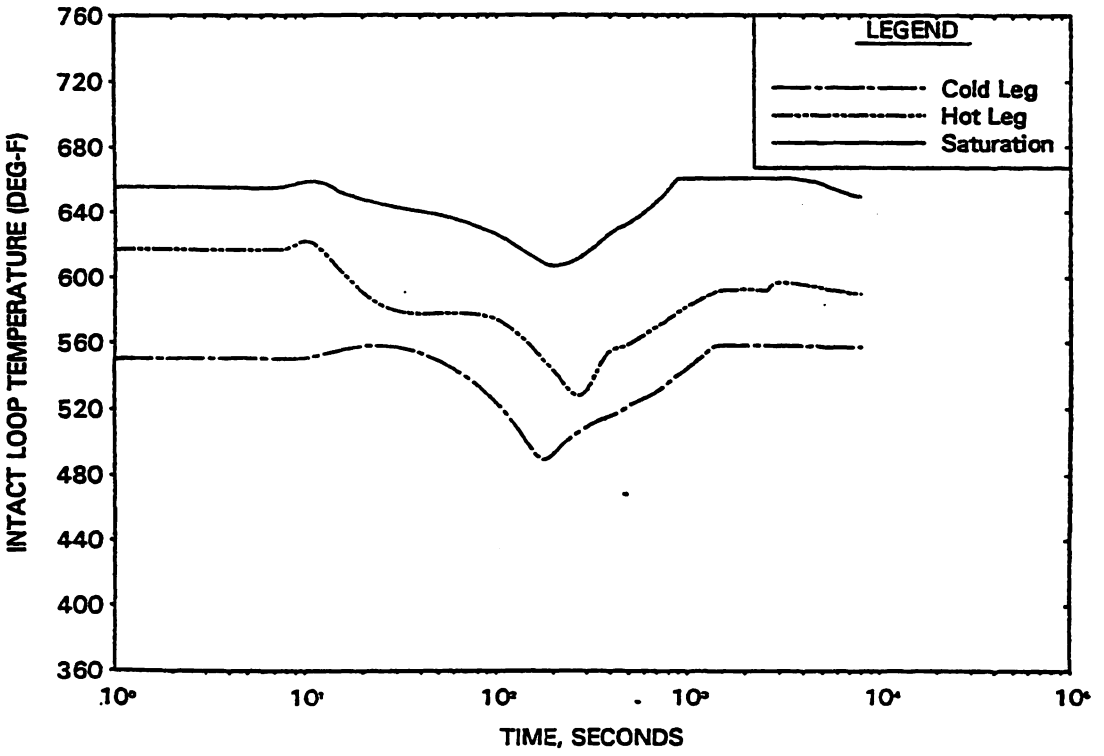

FIGURE 15.4.2-42b MAJOR RUPTURE OF A MFW PIPE - LOOP
INTACT LOOP COLD LEG, HOT LEG AND SATURATION TEMPERATURES

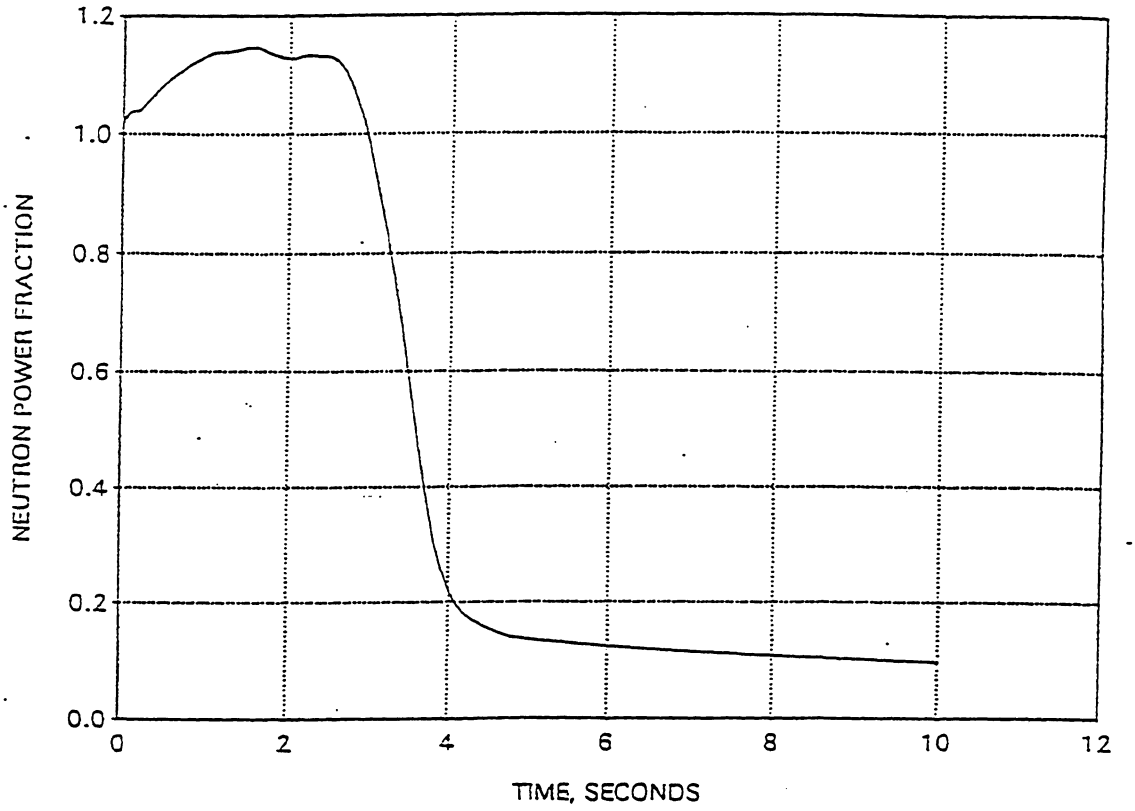

FIGURE 15.4.4-1

Locked Rotor
Neutron Power vs. Time

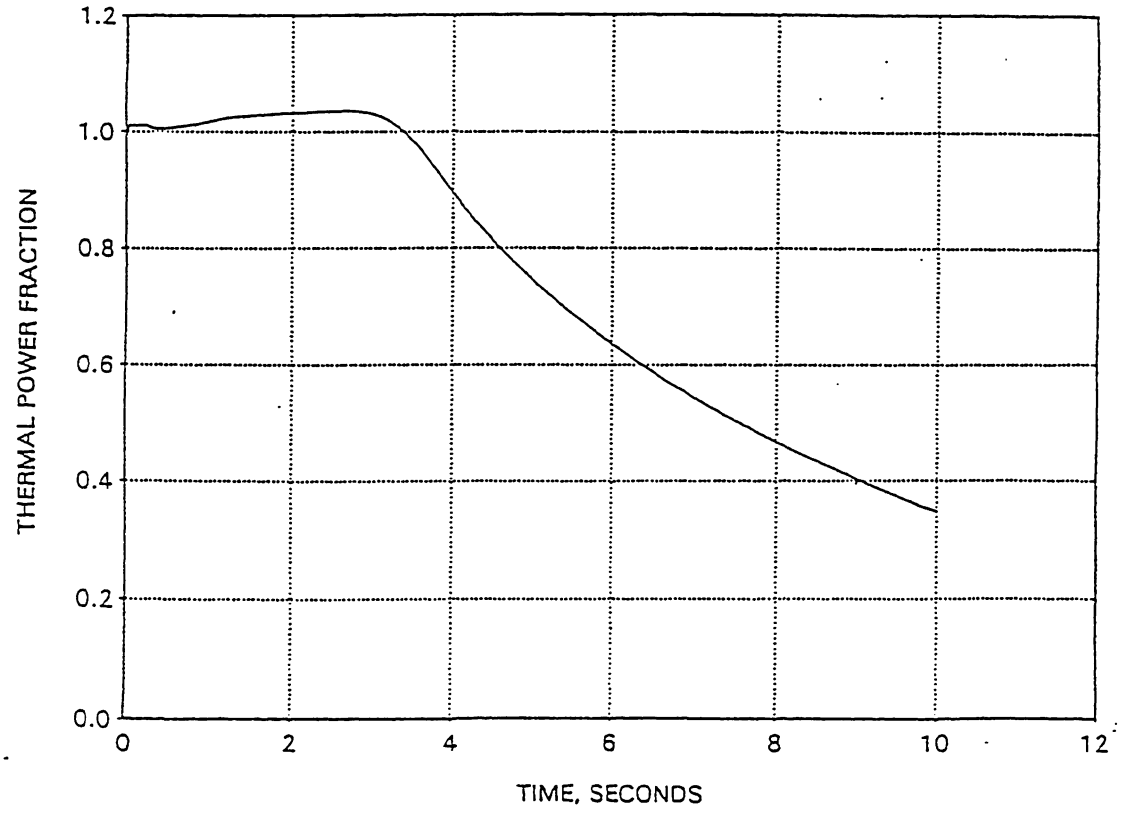

FIGURE 15.4.4-2

Locked Rotor
Thermal Power vs. Time

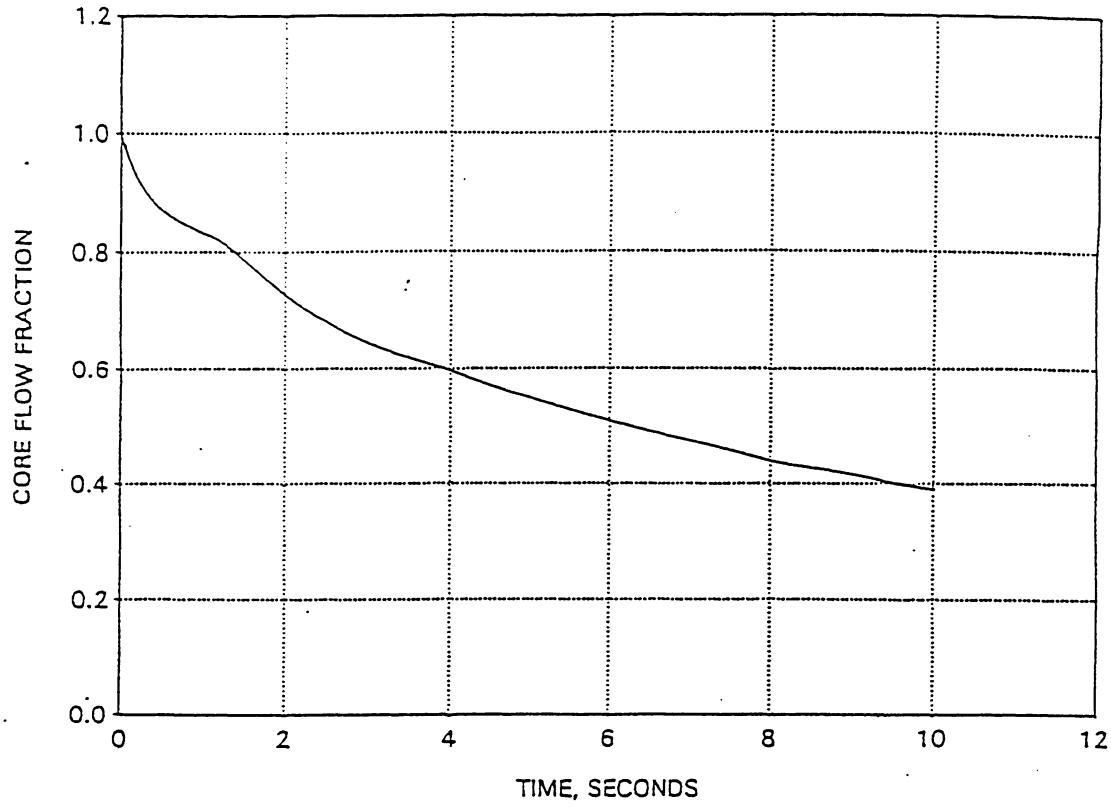

FIGURE 15.4.4-3

Locked Rotor
Core Flow Fraction vs. Time

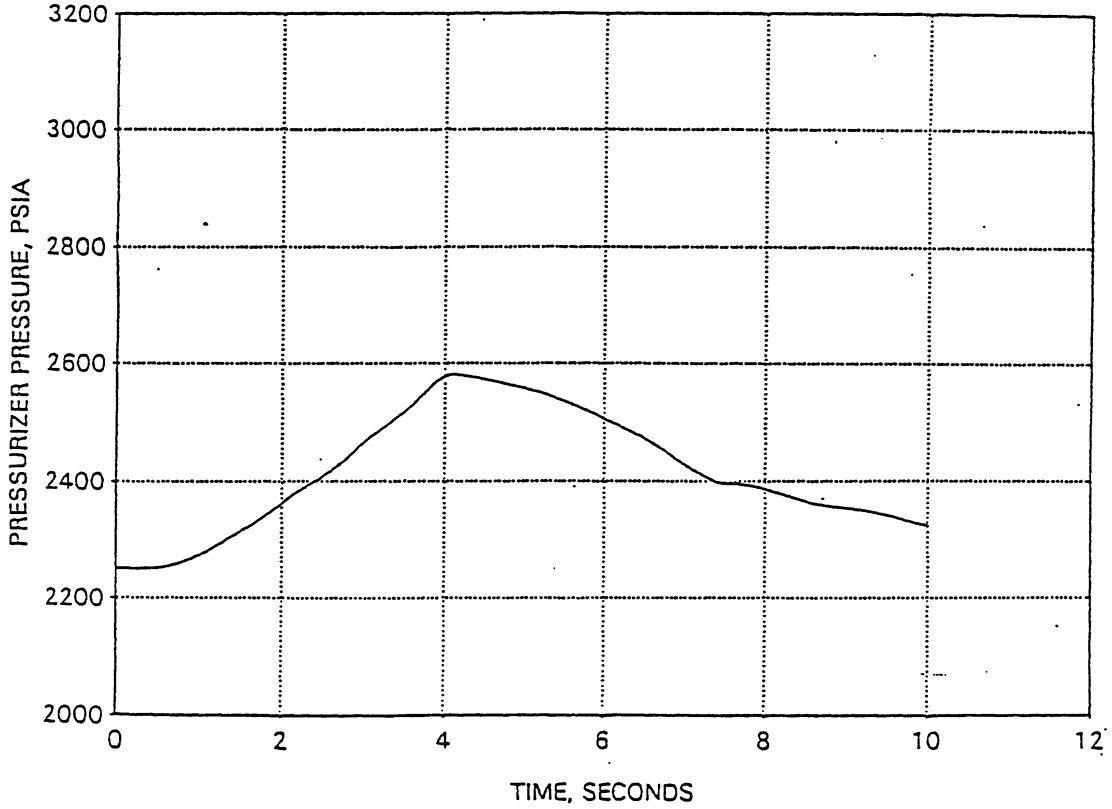

FIGURE 15.4.4-4

Locked Rotor
Pressurizer Pressure vs. Time

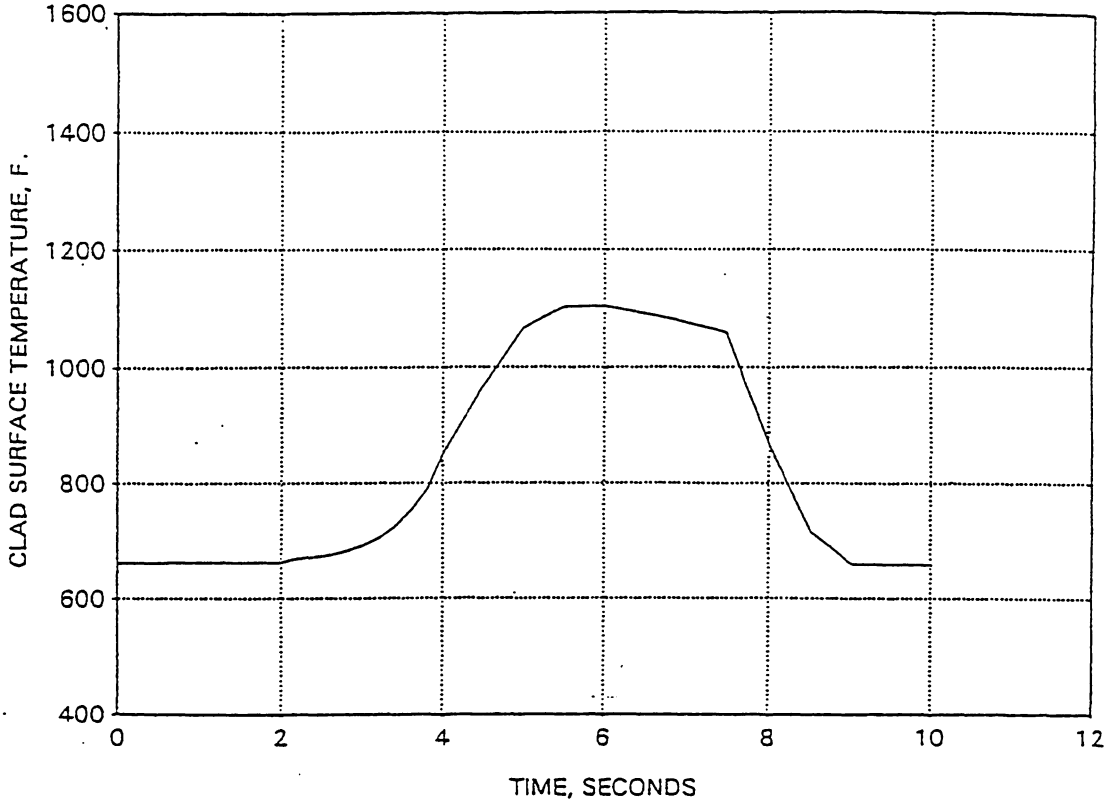

FIGURE 15.4.4-5

Locked Rotor
Clad Surface Temperature vs. Time

Best Available Historical Image

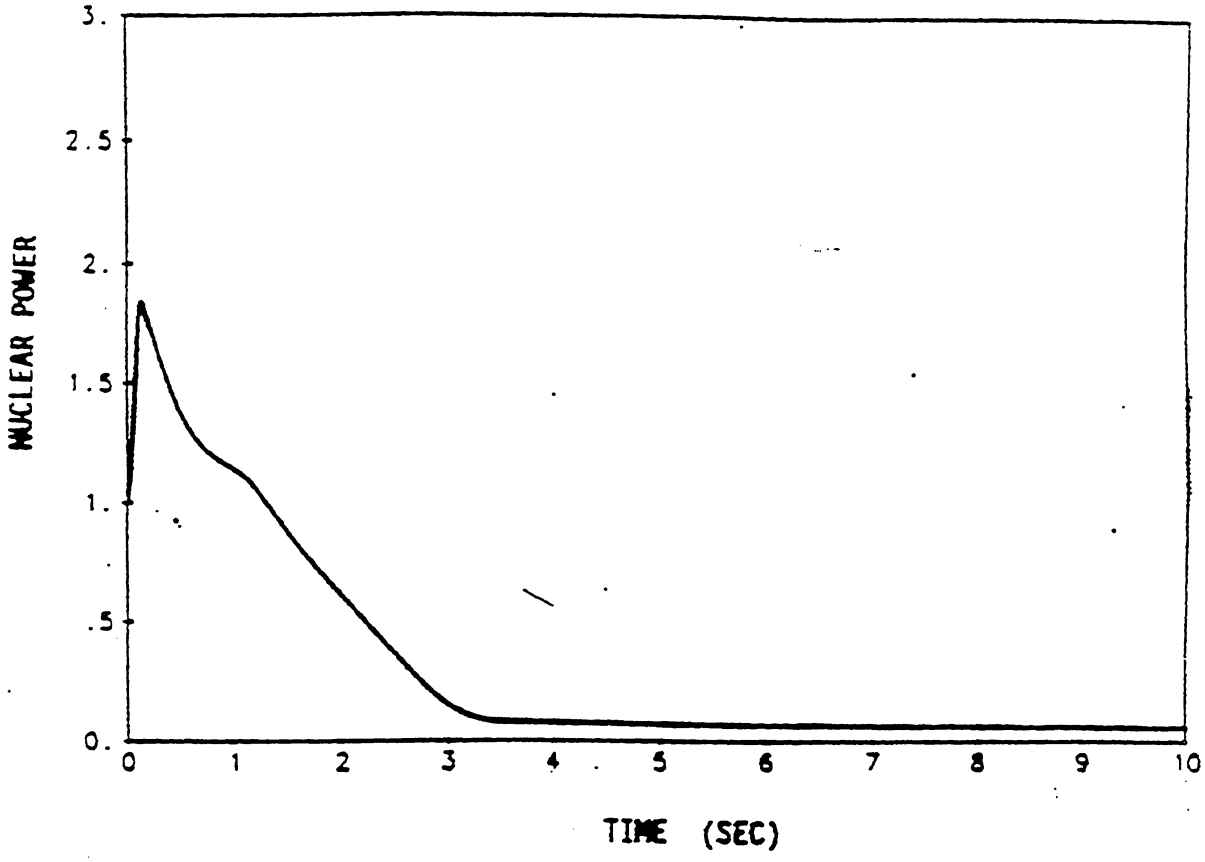

SEQUOYAH
FINAL SAFETY ANALYSIS REPORT
UNITS 1 and 2

Rod Cluster Control Assembly Ejection
Nuclear Power vs. Time (EOL, HFP)

Figure 15.4.6-1

Revised by Amendment 10

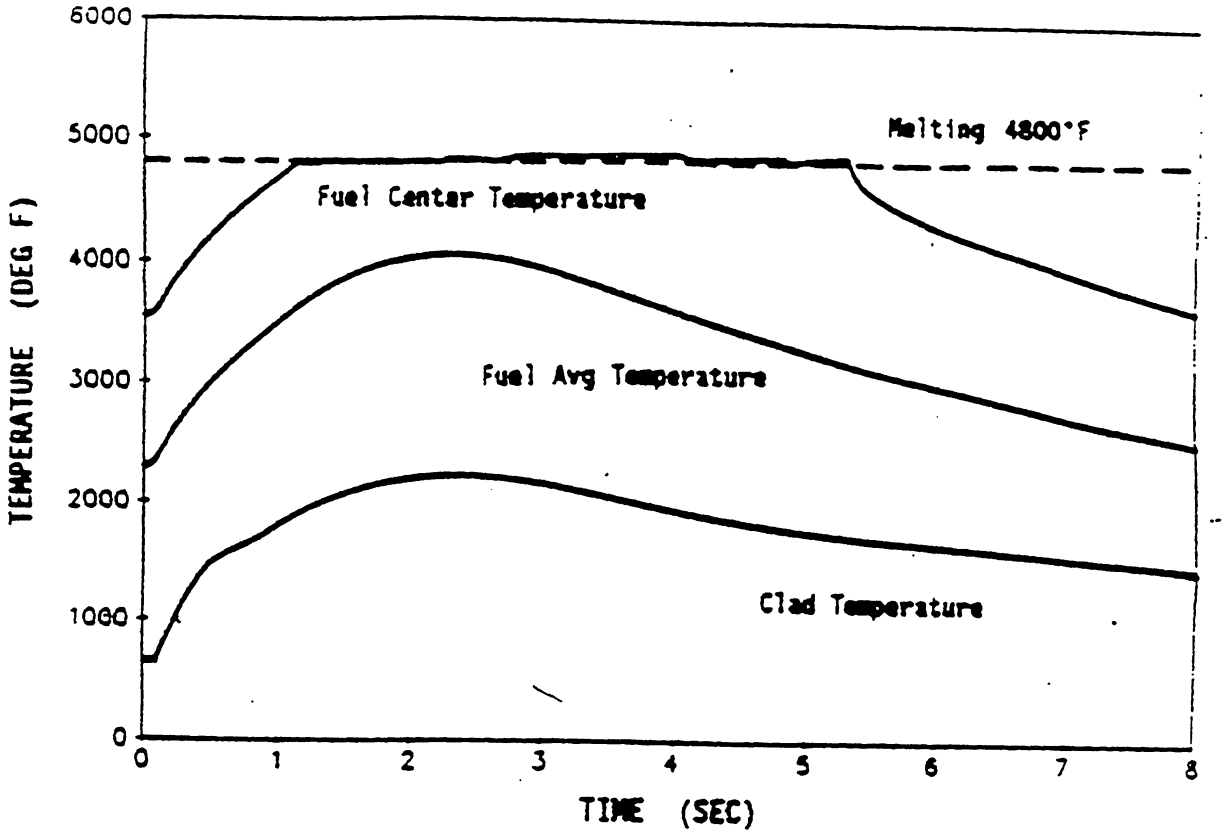

SEQUOYAH FINAL SAFETY ANALYSIS REPORT UNITS 1 and 2
Rod Cluster Control Assembly Ejection Fuel and Clad Temperature vs. Time (EOL, HFP)
Figure 15.4.8-2

Revised by Amendment 10

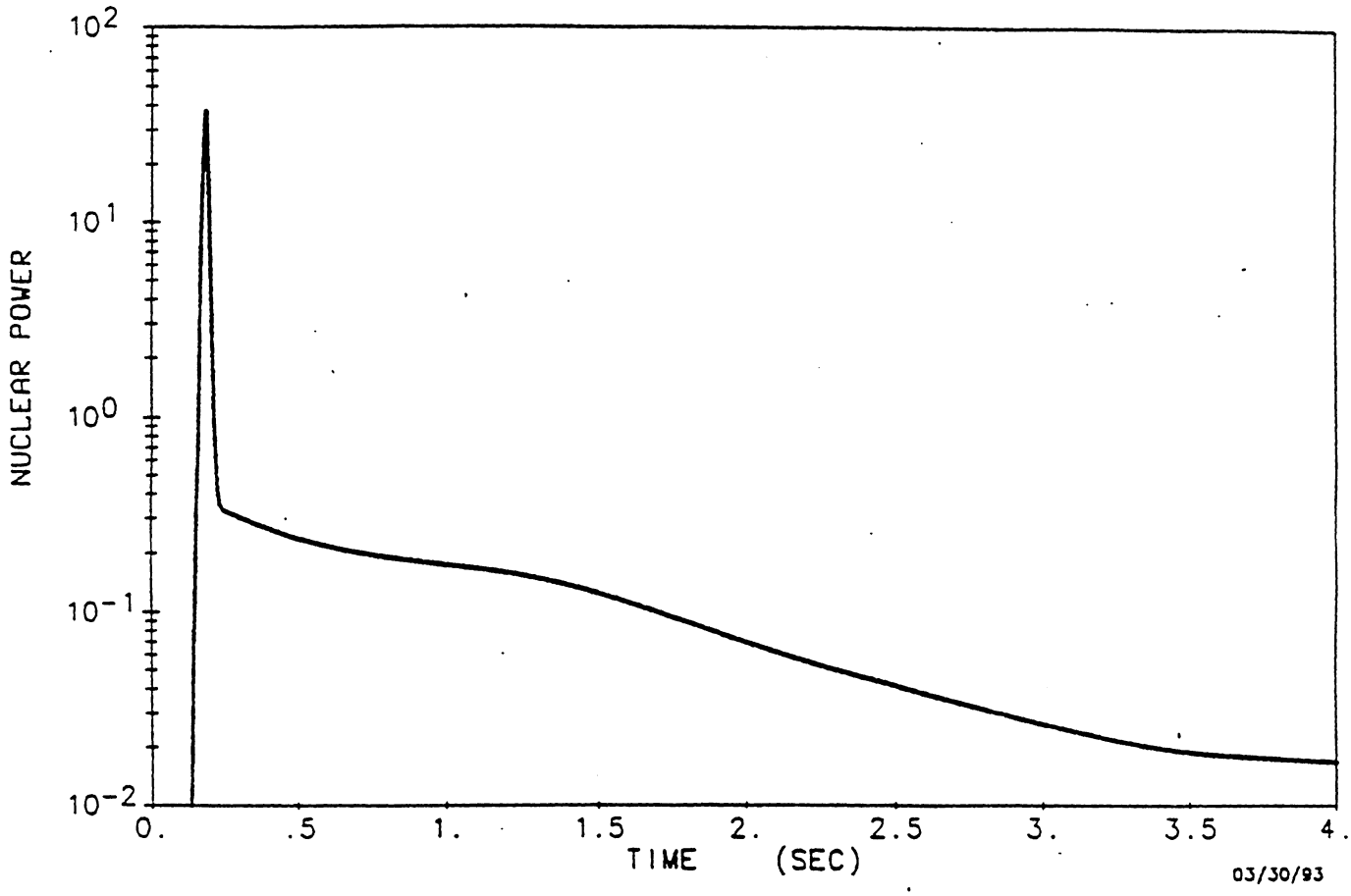

SEQUOYAH FINAL SAFETY ANALYSIS REPORT UNITS 1 and 2
Rod Cluster Control Assembly Ejection Nuclear Power vs. Time (EOL, HZP)
Figure 15.4.6-3

Revised by Amendment 10

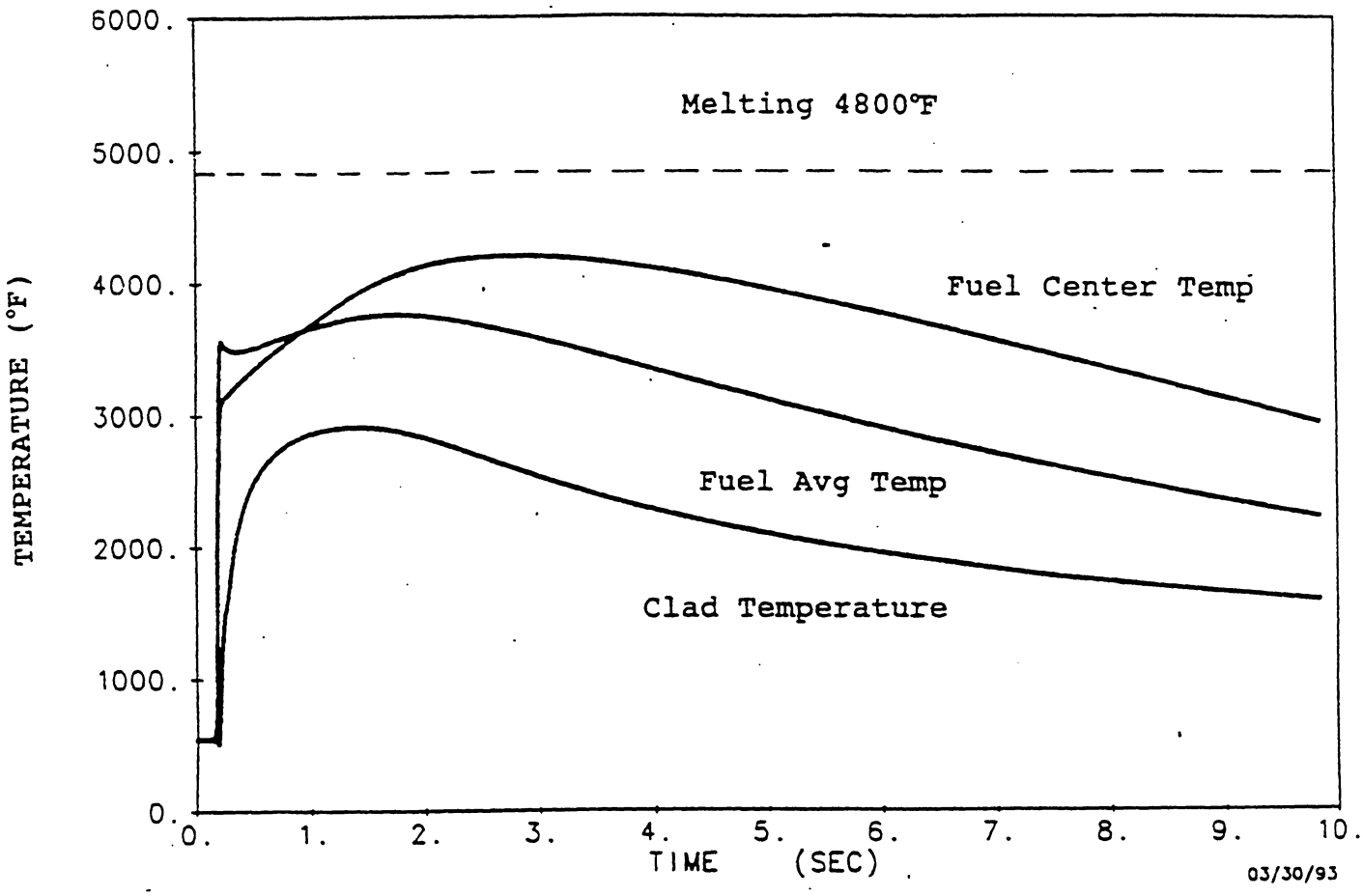

SEQUOYAH FINAL SAFETY ANALYSIS REPORT UNITS 1 and 2
Rod Cluster Control Assembly Ejection Fuel and Clad Temperature vs. Time (EOL, HZP)
Figure 15.4.6-4

Revised by Amendment 10

15.5 ENVIRONMENTAL CONSEQUENCES OF ACCIDENTS

Each unit specific cycle nuclear fuel reload analysis will verify the consequences of an accident previously evaluated in the FSAR have not increased. The reload core design does not have a direct role in mitigating the consequences of any design basis accident and does not affect any of the conclusions for the current 10CFR50 Appendix A, GDC-19 or 100CFR100 analyses described in this section. The reload core design ensures that all applicable design criteria and licensing basis acceptance criteria are met. Adherence to applicable standards and criteria ensures that the fission product barriers maintain an adequate design margin relative to the applicable safety margins.

15.5.1 Environmental Consequences of a Postulated Loss of A.C. Power to the Plant Auxiliaries

The postulated accidents involving release of steam from the secondary system will not result in a release of radioactivity unless there is leakage from the Reactor Coolant System to the secondary system in the steam generator. A conservative analysis of the potential offsite doses resulting from this accident is presented assuming steam generator leakage prior to the postulated accident for a time sufficient to establish equilibrium specific activity levels in the secondary system. Parameters used in the conservative analysis are listed in Table 15.5.1-1.

The following conservative assumptions and parameters are used to calculate the activity releases and offsite doses for the postulated loss of offsite power to the plant auxiliaries:

1. Offsite power is lost and the main steam condensers are not available for steam dump.

2. Eight hours after the accident the residual-heat removal system starts operation to cool down the plant.

3. After eight hours following the accident, no steam and activity are released to the environment.

4. No air ejector release and no steam generator blowdown during the accident.

5. The primary to secondary leakage is evenly distributed in steam generators.

6. Initial primary coolant activity (iodine and noble gas) is consistent with the model discussed in Appendix 15D. This model is consistent with Technical Specification limits on primary coolant activity limits.

7. The analysis assumes an iodine spike with two separate cases considered. For one case there is assumed to be a pre-existing iodine spike. For the second case the initial primary coolant iodine concentration is at the limit set in the Technical Specifications for equilibrium operation and an iodine spike is assumed to be initiated by the reactor trip associated with the event. The iodine spiking models are described in Appendix 15D.

8. Initial secondary coolant activity (iodine) is consistent with the model discussed in Appendix 15D. This model is consistent with Technical Specification limits on primary coolant activity limits. There is no noble gas activity in the secondary coolant.

9. The iodine partition factor is $\frac{\text{amount of iodine/unit mass steam}}{\text{amount of iodine/unit mass liquid}}$ = 0.01 in steam generators.

10. During the postulated accident, iodine transferred to the secondary side in the three good steam generators is uniformly mixed with the water in the steam generators.

11. The steam release for cooling down the plant is equally contributed by all steam generators.

12. The 0-2 and 2-8 hour atmospheric diffusion factors given in Appendix 15A and the 0-8 hour breathing rate of 3.47×10^{-4} m^3/sec are applicable.

The resulting doses for the case with the accident-initiated iodine spike are:

	Thyroid	Whole Body	Skin
Exclusion Area Boundary	0.69 rem	0.085 rem	0.18 rem
Low Population Zone	0.21 rem	0.013 rem	0.026 rem

These doses are well within the limits of 25 rem whole body and 300 rem thyroid defined in 10 CFR 100.

[For information only, the TEDE doses are 0.11 rem at the EAB and 0.02 at the LPZ.]

For the case with the pre-existing iodine spike the doses are:

	Thyroid	Whole Body	Skin
Exclusion Area Boundary	0.73 rem	0.078 rem	0.17 rem
Low Population Zone	0.18 rem	0.012 rem	0.024 rem

These doses are well within the limits of 25 rem whole body and 300 rem thyroid defined in 10 CFR 100.

[For information only, the TEDE doses are 0.10 rem at the EAB and 0.017 at the LPZ.]

Framatome ANP Safety Evaluation With Replacement Steam Generators

The primary-to-secondary leak rate primary coolant activity, iodine activity in the secondary side liquid, and iodine partition factor are set by Technical Specification limits and are not affected by SG design.

The steam release to cool the plant to the RHR cut-in temperature is approximately 5600 lbm less with the RSDs than with the OSGs. Also, the secondary mass at full power and at RHR cut-in is less with the RSGs. Therefore, the mass of secondary steam released to the atmosphere to cool the plant to the RHR cut-in temperature is bounded by the calculation with the OSG.

Since all parameters affecting the Loss of A.C. Power to the Plant Auxiliaries for environmental consequences are not adversely affected by the RSG, the results of the existing analysis are applicable and all acceptance criteria continue to be met with the steam generator replacement.

15.5.2 Environmental Consequences of a Postulated Waste Gas Decay Tank Rupture

The analysis of the postulated waste gas decay tank rupture is performed based on Regulatory Guide 1.24, 1972 (Reference 2).

The parameters used for waste gas decay tank rupture analysis are listed in Table 15.5.2-1. The bases for the analysis are:

1. The reactor has been operating at full power with one percent defective fuel and a shutdown to cold condition has been conducted near the end of an equilibrium core cycle. As soon as possible after shutdown, all noble gases have been removed from the Reactor Coolant System and transferred to the gas decay tank that is assumed to fail.

   The iodine inventory of the tank is based on plant operating procedures (degassing of volume control tank every 3 hours for 21 hours after shutdown). At 21 hours after shutdown the summation of the product of the iodine isotopic inventories in the tank and their respective dose conversion factors is a maximum.

2. The maximum content of the decay tank assumed to fail is used for the purpose of computing the noble gas inventory in the tank. Radiological decay is taken into account in the computation only for the minimum time period required to transfer the gases from the Reactor Coolant System to the decay tank. The noble gas and iodine inventories of the tank are given in Table 15.5.2-2.

3. The tank rupture is assumed to occur immediately upon completion of the waste gas transfer, releasing the entire contents of the tank at ground level to the outside atmosphere. The assumption of the release of the noble gas inventory from only a single tank is based on the fact that all gas decay tanks will be isolated from each other whenever they are in use.

4. The short-term, i.e., 0-2 hour, diffusion factor at the site boundary given in Appendix 15A is used to evaluate the doses from the released activity.

The resulting doses are:

	Thyroid	Whole Body	Skin
Exclusion Area Boundary	0.039 rem	1.8 rem	4.7 rem
Low Population Zone	0.005 rem	0.22 rem	0.56 rem

These doses are well within the limits of 25 rem whole body and 300 rem thyroid defined in 10 CFR 100.

[For information only, the TEDE doses are 1.8 rem at the EAB and 0.22 at the LPZ.]

Framatome ANP Safety Evaluation With Replacement Steam Generators

The tank activity assumed at the event initiation are conservatively determined based on the reactor coolant system volume. The RCS volume is unaffected by SG replacement and the assumed tank activity, based on OSGs, is unchanged.

15.5.3 Environmental Consequences of a Postulated Loss of Coolant Accident

The results of the analysis presented in this section demonstrate that the amounts of radioactivity released to the environment in the event of a Loss-of-Coolant Accident (LOCA) do not result in doses which exceed the guideline values specified in a 10 CFR 100.

An analysis based on Regulatory Guide 1.4, 1973, (Reference 3) was performed. Two cases were considered. The first case with a postulated single failure of one train of EGTS concurrent with the LOCA is applicable to Unit 1 & 2. The second with an alternate single failure of a pressure control operator (PCO) that causes the exhaust damper to remain in the full open position while both trains of EGTS remain in operation is applicable to Unit 2 only. The parameters used for the analysis are listed in Table 15.5.3-1. In addition, an evaluation of the dose to control room operators and an evaluation of the offsite dose resulting from the operation of the Post-Accident Sampling Facility are presented.

Fission Product Release to the Containment

Following a postulated double-ended rupture of a reactor coolant pipe with subsequent blowdown, the Emergency Core Cooling System keeps cladding temperatures well below melting, and limits zirconium-water reactions to an insignificant level, ensuring that the core remains intact and in place.

As a result of the increase in cladding temperature and rapid depressurization of the core, however, some cladding failure may occur in the hottest regions of the core. Thus, a fraction of the fission products accumulated in the pellet-cladding gap may be released to the Reactor Coolant System and thereby to the primary containment.

In order to conservatively evaluate the radiological consequences of a fission product release, the offsite doses were calculated for a core inventory fission product release case.

Core Activity Release (Regulatory Guide 1.4 Analysis)

The offsite doses resulting from a hypothetical accident such as a large LOCA assuming core activity releases have been analyzed. Activity releases of these magnitudes have a considerably lower probability than those associated with a gap release. For the analysis of this hypothetical case, it is assumed that of the entire core-fission product inventory, 100 percent of the noble gases, 50 percent of the halogens, and 1% of the solids in the fission product inventory are released to the containment. Of the fission product iodine released to the containment, 50 percent is considered to be available for leakage, while the remaining 50 percent is assumed to condense on the various structural surfaces in the containment.

Thus, a total of 100 percent of the noble gas core inventory and 25 percent of the core iodine inventory are assumed to be immediately available for leakage from the primary containment. Of the halogen activity available for release, it is further assumed that 91 percent is in elemental form, 4 percent in methyl form, and 5 percent in particulate form.

The fission product inventories used for the core activity release cases are listed in Table 15.5.3-5. Post LOCA radiation doses at the site boundary and low population zone are provided in Table 15.5.3-4.

Modeling of Removal Process

For fission products other than iodine, the only removal process considered is radioactive decay.

The fission product iodine is assumed to be present in the containment atmosphere in elemental, organic, and particulate form. It is assumed that 91 percent of the iodine available for leakage from the containment is in elemental (i.e., iodine vapor) form, 4 percent is assumed to be in the form of organic iodine compounds (e.g., methyl iodine), and 5 percent is assumed to be adsorbed on airborne particulate matter. In this analysis it was conservatively assumed that the organic form of iodine is not subject to any removal processes other than radioactive decay and leakage from the containment.

The effectiveness of the ice condenser for elemental iodine removal is described in Section 6.2.3.3.4. For the calculation of doses, the ice condenser was treated as a removal process proportional to the amount of elemental and particulate iodine airborne in the containment, with time dependent removal constants. The time dependent ice condenser iodine removal efficiencies for the conservative Regulatory Guide 1.4 (1973) analysis are given in Table 15.5.3-2.

Ice Condenser

The ice condenser is designed to limit the leakage of airborne activity from the containment in the event of a LOCA. This is accomplished by the removal of heat released to the containment during the accident to the extent necessary to initially maintain that structure below design pressure and then reduce the pressure to near atmospheric. The addition of an alkaline solution such as sodium tetraborate enhances the iodine removal qualities of the melting ice to a point where credit can be assumed in the radiological analyses.

The operation of the containment deck fans is delayed for 10 minutes following the LOCA. This delay in fan operation yields an initial inlet steam-air mixture into the ice condenser of greater than 90 percent steam by volume which results in more efficient iodine removal by the ice condenser.

As a result of experimental and analytical efforts, the ice condenser system has been proven to be an effective passive system for removing iodine from the containment atmosphere following a LOCA. (Reference 4)

With respect to iodine removal by the ice condenser, the following assumptions were made:

1. The ice condenser is only effective in removing airborne elemental and particulate iodine from the containment atmosphere.

2. The ice condenser is modeled as a time dependent removal process.

3. The effectiveness of the ice condenser in removing iodine is lost after all of the ice has melted using the most conservative assumptions.

Primary Containment Leak Rate

The primary containment leak rate used in the conservative Regulatory Guide 1.4 (1973) analysis is the design basis leak rate guaranteed in the technical specifications regarding containment leakage. For the first 24 hours following the accident, the leak rate was assumed to be 0.25 percent per day and the leak rate was assumed to be 0.125 percent per day for the remainder of the 30-day period.

The leakage from the primary containment can follow either of two paths: (1) leakage into the annulus volume, or (2) through-line leakage to rooms in the Auxiliary Building (see Figure 15.5.3-1). The environmental effects of the core-release source event have been analyzed on the basis that 25 percent of the total primary containment leakage goes to the Auxiliary Building.

Auxiliary Building Release Path

The Auxiliary Building allows holdup and is normally ventilated by the Auxiliary Building ventilation system. However, upon initiation of the SIS signal following a LOCA, the normal ventilation systems to all areas of the Auxiliary Building are shutdown and isolated. Upon Auxiliary Building isolation, the Auxiliary Building Gas Treatment System (ABGTS) is activated to provide ventilation of the area and filtration of the exhaust to the atmosphere. This system is described in Subsection 6.2.3.

Fission products which leak from the primary containment to areas of the Auxiliary Building will be diluted in the room atmosphere and will travel via ducts and other rooms to the fuel handling area or the waste packaging area where the suctions for the (ABGTS) are located. The mean holdup time for airborne activity in the Auxiliary Building areas other than the fuel handling area is greater than one hour with the Auxiliary Building isolated and both trains of the ABGTS operating. For the reference case, it has been conservatively assumed in the estimation of activity releases that activity leaking to the Auxiliary Building is immediately released without filtration to the environment for the first 5 minutes after which it is held up for 0.3 hours and then released through the ABGTS filter system. This assumption is based on an initial delay of 4 minutes to establish the ABSCE and 1 minute to draw down the ABSCE to a negative 1/4-inch water gauge. In the Regulatory Guide 1.4 analysis, the ABGTS filter system is assumed to have a removal efficiency of 99 percent for all forms of iodine.

The Auxiliary Building internal pressure will be maintained at less than atmospheric during normal operation (See Subsection 9.4.2), thereby preventing release to the environment without filtration following a LOCA. The annulus pressure will be maintained less than the Auxiliary Building internal pressure during normal operation, therefore, any leakage between the two volumes following a LOCA will be into the annulus. It has been assumed conservatively that there is no leakage via this route.

Shield Building Releases

The presence of the annulus between the containment vessel and the shield building reduces the probability of direct leakage from the containment vessel to the atmosphere and allows holdup, dilution, mixing, and plate- out of fission products in the shield building. Seventy five percent of the primary containment leakage is assumed to go into the annulus volume in the reference case.

The initial pressure in the annulus is less than atmospheric. After blowdown, the annulus pressure will increase rapidly due to expansion of the containment vessel as a result of primary containment

atmosphere temperature and pressure increases. The annulus pressure will continue to rise due to heating of the annulus atmosphere by conduction through the containment vessel. For the single train EGTS case following a LOCA, the annulus pressure will rise above negative ¼ inch water gauge starting at 46 seconds for approximately 8 seconds. For the PCO failure case, the annulus pressure will rise above negative ¼ inch water gauge starting at 47 seconds for approximately 2 seconds. After a delay of 38 seconds from the start of the accident, the Emergency Gas Treatment System (EGTS) will be operating at full flow to return the annulus pressure to negative 1/2 inch water gauge. See Reference 21.

The EGTS is essentially an annulus recirculation system with pressure activated valves which allow part of the system flow to be exhausted to atmosphere to maintain a "negative" annulus pressure. The system includes absolute and impregnated charcoal filters for removal of halogens. After the initial delay of the ABGTS, the EGTS combined with ABGTS ensures that all primary containment leakage is filtered before release to the atmosphere.

The EGTS suction points in the annulus are located at the top of the containment dome, while nearly all penetrations are located near the bottom of the containment (see Subsection 6.2.3.2.2), thereby minimizing the probability of leakage directly from the primary containment into the EGTS. However, it has been conservatively assumed for the reference case that, after the initial 30 second period, 100 percent of the primary containment leakage to the annulus volume goes directly to the EGTS suction.

The holdup time is a function of the EGTS flow and exhaust rates as well as the annulus volume. The mean holdup time (t_H) before release to the atmosphere is defined as:

$$t_H = \frac{0.5 \times \text{Volume of the Annulus}}{\text{Exhaust Flow from the EGTS to Atmosphere}}$$

It is conservatively assumed that only 50 percent of the annulus free volume is available for mixing of activity.

Nearly all of the leakage is expected to occur in the area of the penetrations near the base of the annulus where it would be diluted by the EGTS flow and slowly travel to the EGTS suction.

Table 15.5.3-3 shows the variation of EGTS exhaust and recirculation flow rates with a single train of the EGTS air cleanup subsystem in operation. Table 15.5.3-3A shows the variation of EGTS exhaust and recirculation flow rates for the PCO failure case. Table 15.5.3-3 and Table 15.5.3-3A show flow rates, with time after the LOCA, which are used for calculation of activity releases for the conservative Regulatory Guide 1.4 analysis. The flow path of fission products which are drawn into the air handling systems is shown schematically in Figure 15.5.3-1.

Effectiveness of Double Containment Design

The analysis has demonstrated clearly the benefits of the double containment concept. As would be expected for a double barrier arrangement, the second barrier acts as an effective holdup tank, resulting in substantial reduction in the two-hour inhalation and whole body immersion doses. The expected offsite doses for the 30-day period at the low population zone are also substantially reduced, since the holdup process is effective for the duration of the accident.

The EGTS exhaust flow rate is dependent on the rate of air inleakage to the annulus. Studies (Reference 5) made of leak rates from typical concrete buildings of this type have resulted in leak

rates from 4 percent to 8 percent per day at a pressure differential of 14 inches of water. Although the pressure differential in this case will be much lower than this value, it has been assumed that a shield building inleakage flow of 500 SCFM for the single failure scenario of one EGTS train and 1637 SCFM for the PCO failure case exists throughout the 30-day period. The inleakage flow for the PCO failure case which results in one pressure control train in full exhaust to the shield building exhaust stack (while the other train remains functional) was conservatively assumed to be greater since the resulting annulus pressure is more negative than the original single failure scenario of one EGTS train. This inleakage flow includes leakage past ventilation system primary containment isolation valves assuming that a single isolation valve fails in the open position.

Emergency Gas Treatment System Filter Efficiencies

The EGTS takes suction from the annulus, and the exhaust gases are drawn through two banks of impregnated charcoal filters in series. Sufficient filter capacity is provided to contain all iodines, inorganic, organic, and particulate available for leakage. Since the air in the annulus is dry, filter efficiencies of greater than 99 percent are attainable. Tests reported in ORNL-NSIC-4 (Reference 6) have demonstrated that inorganic halogen removal efficiencies greater than 99.99 percent can be expected with low relative humidity.

For this analysis, the overall filter system efficiency for the two filter banks of 99 percent was assumed for all forms of iodine. In addition, the analysis assumes a 30 cfm leakage through the decay heat cooldown valves which results in a combined effective filter efficiency of 98.2% for all forms of iodine.

Discussion of Results

The gamma, beta, and thyroid doses for the LOCA at the exclusion area boundary and the low population zone are given in Table 15.5.3-4 for the analyses presented in this section. The dose limits for this accident are defined in 10 CFR 100 (25 rem whole body dose and 300 rem thyroid). Even for this conservative analysis, the doses are well within the 10 CFR 100 guidelines.

The major factor in the effectiveness of the secondary containment is its inherent capability to collect the containment leakage for filtration of the radioactive iodine prior to release to the environment. This effect is greatly enhanced by the recirculation feature of the air handling systems, which forces repeated filtration passes for the major fraction of the primary containment leakage before release to the environment.

Loss of Coolant Accident - Control Room Operator Doses

In accordance with General Design Criterion 19, the control room ventilation system and shielding have been designed to limit whole body dose during an accident period to 5 rem. Thyroid dose is limited to 30 rem and beta skin dose should not exceed 30 rem.

The doses to personnel during a postaccident period originate from several different sources. Exposure within the control room may result from airborne radioactive nuclides entering the control room via the ventilation system. In addition, personnel are exposed to direct gamma radiation penetrating the control room walls, floor, and roof from:

1. Radioactivity within the primary containment atmosphere.

2. Radioactivity released from containment which may have entered adjacent structures.

3. Radioactivity released from containment which passes above the control room roof.

Further exposure of control room personnel to radiation may occur during ingress to the control room from exclusion area boundary and during egress from the control room to site boundary.

In the event of a radioactive release incident, the control room will be isolated automatically by a safety injection system signal and/or by radiation signal from beta detectors located in the air intake stream common to the air intake ports at either end of the Control Building. These redundant signals are routed to redundant controls which actuate air-operated isolation dampers. Operation of the emergency pressurizing fans with inline HEPA filters and charcoal adsorbers is also initiated by these signals. Simultaneously, 4000 cfm of recirculation and makeup air is rerouted automatically through the HEPA filters and charcoal adsorbers. Approximately 200 to 1000 cfm of outside air bypasses the intake isolation dampers through a flow controlled duct routed to the emergency recirculation system upstream of the HEPA filters and charcoal adsorbers. This flow of outside air provides the control room with a slight positive pressure relative to the atmosphere outside and to surrounding structures. Isolation dampers located in each intake line may be selectively closed by control room personnel. The selection between the two would be based on the objective of admitting a minimum of airborne activity to the control room via the makeup airflow. The control room ventilation flow system is shown in Figure 9.4.1-1. The equivalent of 51 cfm of unfiltered outside air enters through the main control room doors as a result of personnel entering or leaving and through leakage from ducts and dampers. To evaluate the ability of the control room to meet the requirements of General Design Criterion 19, a time dependent model of the control room was developed. In this model, the outside air concentration enters the control room via the isolation damper bypass line and the HEPA filters and charcoal adsorbers. The concentration in the room is reduced by decay, leakage out, and by recirculation through the HEPA filters and charcoal adsorbers. Credit for filtration is taken during two passes through the charcoal adsorbers. Using these assumptions the following equations for the rate or change of the control room concentrations are obtained:

$$\frac{dM}{dt} = C_o(1 - K_1)\, L/V - L/V\, M - \frac{R_c}{V} M - \lambda M \qquad (1)$$

$$\frac{dN}{dt} = \frac{R_c}{V}(1 - K_2)\, M - L/V\, N - \lambda N \qquad (2)$$

$$C(t) = M(t) + N(t) \qquad (3)$$

Where

M(t) = Once filtered time dependent concentration

N(t) = Twice filtered time dependent concentration

C(t) = Total time dependent concentration in control room

C_o = Concentration of isotope entering air intake

K_1 = Effective filter efficiency for a particular isotope during first pass (corrected for bypass leakage)

K_2 = Filter efficiency for a particular isotope during second pass

L = Flow rate of outside air into control room and leakage out of control room

R_c = Recirculated air flow rate through filters

λ = Decay constant

V = Control room free volume

These equations are readily solvable if C_o is constant or a simple function of time during a time interval. Since C_o consists of a number of terms involving exponentials, it was assumed to be constant during particular time intervals corresponding to the average concentration during each interval as described below. Solving equations (1), (2), and (3) yields:

$$C(t) = \left[\frac{(1-K_1)(1-K_2)C_o}{W_m V}\right]\left[\frac{L}{(1-K_2)(1-e^{-W_m t})} + \frac{R_c L}{W_n V}(1-e^{-W_n t}) - L(1-e - e^{-W_m t})\right] \quad (4)$$

Where

$$W_m = \frac{(L + R_c + \lambda V)}{V}$$

$$W_n = \frac{(L + \lambda V)}{V}$$

The value of C_o used in equation (4) is determined as follows:

$$C_{oi} = \frac{(X/Q)_i}{t_{(i+1)} - t_i}\int_{t_i}^{t_{(i+1)}} R\,dt \quad (5)$$

Where

C_{oi} = Average concentration of activity outside control room during <u>ith</u> time period (Ci/m^3)

$(X/Q)_i$ = Atmospheric dilution factor (sec/m^3) during the <u>ith</u> time period

R = Time dependent release rate of activity from containment (Ci/sec)

The atmospheric dilution factors were determined using the accumulated meteorological data on wind speed, direction, and duration of occurrence obtained from the Sequoyah plant site applied to a building wake dilution model. The dilution factors are calculated by the ARCON96 methodology (Reference 11). The values used are given in Table 15.5.3-6.

Equation (4) is used to determine the concentration at any time within a time period and upon integrating and dividing by the time interval gives the average concentration during the time interval due to inflow of radioactivity with outside air as shown:

$$\overline{C_i} = \frac{\int_O^T C_i(t)dt}{T - O}$$

Where

T	= $t - t_{i-1}$
t	= Time after accident
t_{i-1}	= Time at end of previous time period

Further contributions to the concentration during time period are due to the concentrations remaining from prior time periods. These contributions are obtained from the following equations:

$$C_{R(i+j)} = M_{R(i+j)} + N_{R(i+j)} \quad (7)$$

$$\frac{dM_{R(i+j)}}{dt} = -(L/V + R_c/V + \lambda)\, M_{R(i+j)} \quad (8)$$

$$\frac{dN_{R(i+j)}}{dt} = R_c/V\,(1-K_2)\, M_{R(i+j)} - (L/V + \lambda)\, N_{R(i+j)} \quad (9)$$

With initial conditions:

$M_{R(i-j)}(O) = M_{R0(i)}$ = (Once filtered concentration at the end of the <u>ith</u> time period.)

$N_{R(i+j)}(O) = N_{R0(i)}$ = (Twice filtered concentration at end of the <u>ith</u> time period.)

Solving equations (8) and (9) and substituting certain initial condition relations equation (7) becomes:

$$C_{R(i+j)} = C_{Ro(i)} e^{-W_n(t-\tau)} - M_{RO(i)}\, K_2\, e^{-W_n(t-\tau_i)} - e^{-W_m(t-\tau_i)} \quad (10)$$

Integrating equation (10) for each of the prior time periods gives the contribution from these time periods to the present time period. The average concentration is determined for these contributions using the method of equation (6).

Filter efficiencies of 95 percent for elemental and particulate iodine and 95 percent for organic iodine were deemed appropriate for the first filter pass. Since the concentration of iodine in the Main Control Room is much reduced as a result of this filtration, the efficiencies were reduced for the second pass to 70 percent for elemental and particulate iodine, and 70 percent for organic iodine.

To account for the unfiltered inleakage, 51 cfm were added to the make-up flow (L in equation 1) of 200 cfm, and the filter factor for the first pass was decreased to an equivalent value of 75.7 percent for elemental and particulate iodine, and 75.7 percent for organic iodine. For a 1000 cfm makeup flow, the filter-factor for the first pass was decreased to equivalent values of 90.4 percent for both species. In both cases, the filter efficiencies for the second pass are not affected by the unfiltered inleakage.

The filter efficiency for noble gases was taken as zero for all cases.

The above equations were incorporated into a computer program together with appropriate equations for computing gamma dose, beta dose, and thyroid dose using these average nuclide concentrations and time periods. The whole body gamma dose calculation consists of an incremental volume summation of a point kernel over the control room volume. The principal gammas of each isotope are used to compute the dose from each isotope. The dose computations for beta activity were based on a semi-infinite cloud model. Doses to thyroid were based on activity to dose conversion factors and the breathing rates presented in Table 15A-1. (The equations and various data are given below.) The doses from these calculations are presented in Table 15.5.3-7. Gamma dose contributions from shine through the control room roof due to the external cloud and from shine through the control room walls from adjacent structures and from containment are computed using an incremental volume summation of a point kernel which includes buildup factors for the concrete shielding. For the calculation of shine through the control room roof, an atmospheric, rectangular volume several thousand feet in height and several control room widths was used. The control room roof is a 2-foot, 3-inch-thick concrete slab and is the only shielding considered in this calculation. The average isotope concentrations at the control bay for each time period were used as the source concentrations. For the shine from adjacent structures the shielding consists of the 3-foot-thick (5-foot in certain areas) control room walls. The doses are calculated similarly to the shine dose through the roof. The average isotope concentrations at the control bay intake for each time period are also used for these calculations.

The shine from the spreading room below the control room is also computed in the same manner as adjacent structures. The shielding for this computation consists of the 8 inch thick concrete floor. The summation of the incremental elements is performed over the volume of each room or structure of interest.

In addition to the dose due to shine from surrounding structures and from the passing cloud, the shine from the Reactor Containment Building also contributes to the deep dose equivalent to personnel. This contribution is computed in the same manner as the methods used above. Due to the location of the Auxiliary Building between the Reactor Buildings and the control room and the thicker control room Auxiliary Building wall near the roof, the minimum ray path through concrete from the containment into the control room below 10 feet above the control floor, is 8 feet. All nuclides released to containment are assumed uniformly distributed and their time dependent concentrations were used to compute dose. The dose computed from this source is negligible and is not included in Table 15.5.3-7.

Several doors penetrate the control room walls, and the dose at these areas would be larger than the doses calculated as described above. The potential shine at these doors and at other penetrations has been evaluated. As a result, hollow steel doors filled with No. 12 lead shot have been incorporated into the design of the shield wall between the control room and the turbine building. These doors will provide shielding comparable to the concrete walls. Shine through other penetrations was found to be negligible.

Another contribution to the total dose of control room personnel is the exposure incurred during ingress from and egress to the exclusion area boundary. The doses to the Control Room personnel were computed based on the following assumptions:

1. Ten minutes are required to leave the control room and arrive at car or vice versa.

2. Five minutes are required to drive along the access road.

3. The radioisotope concentrations at the control room arrival or departure point are those computed for the control bay air intakes.

4. The concentration as a function of distance along the access road was determined from the atmospheric diffusion model.

5. One one-way trip first day, one round-trip/day 2nd through 30th day.

6. Other parameters used in the calculation were taken from Murphy and Campe[10]. They are:

1)	Occupancy Adjustment Factors:	100 percent occupancy 0-24 hours 60 percent occupancy 1-4 days 40 percent occupancy 4-30 days
2)	Wind Speed Factors:	5th percentile wind speed 0-8 hours 10th percentile wind speed 8-24 hours 20th percentile wind speed 1-4 days 40th percentile wind speed 4-30 days

It was also assumed that initially the make-up air intake would be through the vent admitting the highest radioisotope concentration, but that the Main Control Room personnel could switch intake vents 8 hours after the accident in order to admit a minimum of Airborne Activity to the Main Control Room via the make-up airflow.

The whole body and thyroid doses from the radiation sources discussed above are presented in Table 15.5.3-7. The dose to whole body is below the General Design Criterion 19 limit of 5 rem for control room personnel, and the thyroid dose is below the limit of 300 rem. The total calculated doses are within acceptable limits.

Dose Equations, Data, and Assumptions

The dose from gamma radiation originating within the control room is given by:

$$D\gamma = 1.696 \text{ X } 10^4 \sum_{j=1}^{\alpha} [\sum_{i=1}^{\beta} Q_{ij} (\sum_{k=1}^{\gamma} \{E_{ik} f_{ik} \frac{\mu_e}{(\rho)_{ki}} \sum_{m=1}^{\varepsilon} \sum_{n=1}^{\omega} \sum_{q=1}^{\sigma}$$

$$\frac{e^{-\mu ak \sqrt{x_m^2 + y_n^2 + z_q^2}}}{(x_m^2 + y_n^2 + z_q^2)} \bullet \Delta x \Delta y \Delta z\})] \ (t_j - t_{j-1}) \qquad (11)$$

Where

D_γ = Absorbed dose in flesh in mrads

Q_{ij} = Concentration of isotope i during time period j in curies/m^3

E_{ik} = Energy of gamma k isotope i in MeV

f_{ik} = Number of the k gammas of isotope i given off per disintegration

$\frac{\mu_e}{(\rho)_{ki}}$ = Mass attenuation coefficient for flesh determined at the energy of the kth gamma of isotope i in cm^2/gram.

μak = Linear attenuation coefficient for air determined at the energy of the kth gamma of isotope i in inverse meters.

x,y,z = Coordinate distances from the dose point to the source volume element (m,n,q) in meters.

t_{j-1}, t_j = Times at the beginning and end of time period j in hours.

This equation may also be used for shine through concrete shields by the inclusion of two additional factors within the innermost summation.
These factors are:

1. $\exp(-\mu_{ck} t_c \sec \Theta)$

2. $B_c (\mu_{ck} t_c \sec \Theta)$

Where

μ_{ck} = The linear attenuation coefficient of concrete determined at the energy of the kth gamma of isotope i in inverse meters

t_c = Concrete shield thickness

B_c = Buildup factor for concrete

Θ = Angle between a vector normal to the shield and a vector from the dose point to the source point

Terms (1) and (2) are the linear attenuation exponential and the buildup factors for concrete respectively.

The dose from beta radiation is given by the semi-infinite cloud immersion dose:

$$D_B = (0.230)\ (X/Q) \left[\sum_{i=1}^{a} Q_i \left(\sum_{k=1}^{\gamma} E_{ik} f_{ik} \right) \right]$$

Where

D_B = Dose due to beta in rem

X/Q = Atmospheric dispersion factor during time period in sec/m^3

Q_i = Accumulated activity release of isotope i during time period (12)

E_{ik} = Average energy of beta k of isotope i

f_{ik} = Number of k betas of isotope i per disintegration

For beta dose in the control room equation (12) becomes:

$$D_B = (0.230) \sum_{j=1}^{\delta} \sum_{i=1}^{\alpha} \overline{C_{ij}} \sum_{k=1}^{\beta} E_{ik} f_{ik}\ (t_j - t_{j-1})$$

Where

$\overline{C}_{ij}$ = Average concentration of isotope i during time period j.

Inhalation Dose (Thyroid)

The inhalation dose for a given period of time has the general form:

$$D_i = (X/Q)(B)\left[\sum_{i=1}^{n} (Q_{ij})(DCF_i)\right](t_j - t_{(j-i)}) \qquad (13)$$

Where

D_i = Thyroid inhalation dose, rem

X/Q = Site dispersion factor during time period, sec/m^3

B = Breathing rate during time period, m^3/hr

Q_{ij} = Average activity release rate during time period j of iodine isotope i

DCF_i = Dose conversion factor for iodine isotope i, rem/microcurie inhaled

t_j = Total time at end of period j, hours

For inhalation dose within the control room equation (13) becomes:

$$D_i = (B)\left[\sum_{i=1}^{n} \overline{C_{ij}}(DCF_i)\right](t_j - t_{(j-i)}) \qquad (14)$$

In this expression $\overline{C}_{ij}$, the average concentration of isotope i during time period j, has replaced the following factor:

$(X/Q)\ Q_{ij}$

The C_{ij}'s are those determined by equations (4) and (6).

The assumed breathing rates, B, are shown on Table 15A-1.

Environmental Consequences Due to the Operation of the Postaccident Sampling Facility

Section 9.5.10 discusses the Postaccident Sampling Facility (PASF) at Sequoyah Nuclear Plant (SQN). The "worst case" offsite doses resulting from the operation of the PASF are calculated in this section. NUREG-0737 recommends the assumption of a postaccident release of radioactivity equivalent to that described in Regulatory Guide 1.4 (i.e., 50 percent of the core radioiodine, 100 percent of the core noble gas inventory, and 1 percent of the core solids are contained in the primary coolant). For this "worst case" analysis, the primary system remains intact and pressurized; consequently, the noble gases will stay in the reactor coolant and, in addition, there is no dilution by the Emergency Core Cooling System (ECCS) which would occur during a LOCA.

The assumptions used in determining the offsite doses are listed below:

1. The initial reactor coolant sample is drawn one hour postaccident, followed by daily samples for the next seven days. After the first week, one sample a week is taken. The offsite doses are based on the samples taken during the first 30 days after the accident.

2. A core release of 100 percent of the noble gases and 50 percent of the iodines is assumed to be mixed with the reactor coolant (94,350 gallons).

3. The postaccident sample collector drain tank is assumed to accumulate 60 gallons of water during each sampling mission. Twenty of the 60 gallons are reactor coolant and the rest are demineralized flush water.

4. All of the noble gases contained in the reactor coolant that are held in the sample collector drain tank are liberated to the tank's air space and exhausted to the atmosphere.

5. The vapor-water partition coefficients of the iodines in the sample collector drain tank are based on Reference 12.

6. All of the iodine liberated to the tank's air space are exhausted to the atmosphere through charcoal filters.

7. A charcoal filter iodine removal efficiency of 95 percent is used for both the organic and inorganic iodines.

8. Two-hour atmospheric dilution factors from FSAR Table 15A-2 are used for each release since each release occurs over short periods of time.

9. Radioactivity decay of the noble gases and iodines is taken into account for the reactor coolant only; there is no holdup in the sample collector drain tank assumed.

Discussion of Results

The offsite doses at the exclusion area boundary resulting from the operation of PASF for this "worst-case" evaluation are 15 rem deep dose equivalent, 9.4 rem beta, and 16.6 rem thyroid; at the low population zone, they are 1.8 rem deep dose equivalent, 1.2 rem beta, and 2.2 rem thyroid. It should

be noted that doses this large cannot occur simultaneously with the doses calculated for a Regulatory Guide 1.4 LOCA. The post-LOCA operation of the PASF would result in much lower offsite doses since most of the noble gases and other volatile nuclides would be released in the primary containment before they could get into the sample collector drain tank, FSAR 15.5.8, Reference 18. The doses resulting from the operation of the PASF are within the limits prescribed in 10 CFR 100.

Plant Accessibility Post LOCA

The Sequoyah Nuclear Plant was designed so that access is generally not required outside the main control room for 30 days after an accident. Access to areas within the auxiliary building and structures away from the main complex for the performance of specified tasks are examined individually. Approval of such missions is based on control room personnel performing the required task and not exceeding the limit of 10CFR50, Appendix A, General Design Criterion 19. SQN-DC-V-21.0 (Reference 17) addresses the design basis post accident mission regulatory requirements, provides the basis for determining which design basis accidents would require a post accident mission following a design basis event, and establishes the criteria used to determine when a post accident mission dose evaluation is required outside the main control room.

A study was performed to evaluate the Auxiliary Building shielding design to determine accessibility after an accident and to be used to calculate doses to equipment in the Auxiliary Building subsequent to an accident.

The study assumed the design LOCA with subsequent recirculation of contaminated water from the containment sump through the residual heat removal (RHR), containment spray, and safety injection systems. The source terms used for this accident are the Regulatory Guide 1.4 sources diluted by the full volume of injection water available plus the melted ice.

The dose rates through the Reactor Shield Building from activity released into the containment atmosphere were also calculated.

The sources of available water are:

Refueling Water Storage Tank	340,000 gallons
4 SIS Accumulators	27,676 gallons (negligible)
Ice Condenser	357,314 gallons

The reactor coolant volume is 12,612 cubic feet or 94,249 gallons; therefore, the total volume of water is 829,064 gallons.

For source volumes containing contaminated liquid, the activity in the liquid was assumed to consist of:

1. 100 percent of the noble gases.
2. 50 percent of the halogens with noble gas daughter products.
3. One percent of the solid fission products.

Dose rates were calculated using these sets separately as the source term. The results of this analysis are reported as the sum of these separate dose rates. Source terms used in this analysis are provided in FSAR Table 15.5.3-8. For source volume containing gaseous activity, source terms were calculated for 100 percent of the noble gases and 25 percent of the halogens. Post LOCA radiation doses in the Reactor Building are addressed in FSAR 15.5.8., Reference 17.

Flow diagrams, equipment, and field-routed piping layouts were reviewed to determine the flow paths which might be used after an accident and to determine the volume and physical locations of contaminated fluids in the Auxiliary Building. The layout of the shield walls and equipment within the rooms were conservatively modeled and source terms were calculated at various times after an accident. Dose rates were then calculated at several positions in the Auxiliary Building with respect to the contained sources and at various times after an accident. The locations where dose rates were calculated were chosen to conservatively calculate the dose rates in corridors outside equipment cubicles, in adjacent rooms, and within the equipment cubicles. The source volume in each pump room was modeled as a volume of water in a rectangular box equivalent to the volume of water contained in the pump and piping in that room. The smallest wall thickness of the pipes carrying significant volumes of contaminated liquid was used as an iron cladding around the source. Heat exchangers were modeled as equivalent volume rectangular boxes with a square cross-section and with an iron cladding equal to the shell thickness. Tanks are modeled similarly to heat exchangers. All of the piping in a pipe chase or pipe shaft was modeled as a single equivalent volume of water in a rectangular box extending the length of the pipe chase or shaft with the minimum pipe wall thickness as an iron cladding around the source. Post LOCA radiation doses for the Auxiliary Building are addressed in FSAR 15.5.8., Reference 17.

Of the vital areas, none is near an area containing postaccident sources. The discussion of the exposure of control room operators is therefore still valid without modification. The Technical Support Center (TSC) is located in the Control Building on the same floor as the control room, hence within the habitability zone. The exposure in the TSC should therefore be the same as in the control room. Table 15.5.3-7 provides the integrated 30-day operator dose. The continuous occupancy exposure rate in those two areas is less than the 15 mrem per hour limit suggested in NUREG 0578. Note that the calculated dose in the Control Building habitability zone is due almost entirely to airborne contamination of the zone and neighboring spaces due to the introduction of filtered outside air for maintaining a pressurized condition in the habitability zone. The contribution to the operator whole-body dose from the plume released at the containment vent is negligible.

The shutdown board room may require occupancy briefly to accomplish a single control function. Access restriction would be due only to airborne activity. Analyses shows that required access can be obtained with dose consequences within the limits of GDC19. TVA has also determined that it may be necessary to perform certain actions in the auxiliary building following a LOCA. Analyses have shown that required access can be obtained for all missions currently examined with dose consequences within the limits of GDC 19. Future missions will be analyzed as the need to perform such missions are identified. In no event will a mission be approved which exceeds the limits of GDC 19. FSAR Section 15.5.8, Reference 17, addresses the GDC 19 analyses and plant procedures associated with these analyses.

The RSGs have no effect on the assumptions and inputs used in the LOCA environmental consequences analyses. Therefore, the conclusions of the existing analyses are equally applicable to Sequoyah Unit 1 and Unit 2 with the RSGs.

15.5.4 Environmental Consequences of a Postulated Steam Line Break

The postulated accidents involving release of steam from the secondary system will not result in a release of radioactivity unless there is leakage from the Reactor Coolant System to the secondary system in the steam generator. A conservative analysis of the potential offsite doses resulting from this accident is presented assuming steam generator leakage prior to the postulated accident for a time sufficient to establish equilibrium specific activity levels in the secondary system. Parameters used in the analysis are listed in Table 15.5.4-1.

The following conservative assumptions and parameters are used to calculate the activity releases and offsite doses for the postulated steam line break.

1. Prior to the accident, an equilibrium activity of fission products exists in the primary and the secondary systems due to a primary to secondary leakage in steam generators.

2. Offsite power is lost, main steam condensers are not available for steam dump.

3. Eight hours after the accident, the residual heat removal system starts operation to cool down the plant.

4. The primary to secondary leakage is evenly distributed in steam generators.

5. After eight hours following the accident, no steam and activity are released to the environment.

6. No air ejector release and no steam generator blowdown during the accident.

7. Initial primary coolant activity (iodine and noble gas) is consistent with the model discussed in Appendix 15D. This model is consistent with Technical Specification limits on primary coolant activity limits.

8. The analysis assumes an iodine spike with two separate cases considered. For one case there is assumed to be a pre-existing iodine spike. For the second case the initial primary coolant iodine concentration is at the limit set in the Technical Specifications for equilibrium operation and an iodine spike is assumed to be initiated by the reactor trip associated with the event. The iodine spiking models are described in Appendix 15D.

9. Initial secondary coolant activity (iodine) is consistent with the model discussed in Appendix 15D. This model is consistent with Technical Specification limits on primary coolant activity limits. There is no noble gas activity in the secondary coolant.

10. The iodine partition factor is $\frac{\text{amount of iodine/unit mass steam}}{\text{amount of iodine/unit mass liquid}} = 0.01$ in the good steam generators

11. During the postulated accident, iodine transferred to the secondary side in the three good steam generators is uniformly mixed with the water in the steam generators.

12. In the affected steam generator, all the water boils off and releases through the break immediately after the accident. The partition factor for the iodine released is assumed to be 1.0. After this initial release, further iodine is released due to the primary to secondary leakage in the affected steam generator. A partition factor of 1.0 is also assumed for this iodine release.

13. The primary pressure remains constant at 2235 psig for 0-2 hours and decreases linearly to atmospheric from 2235 psig during the period of 2-8 hours.

14. The 0-2 and 2-8 hour atmospheric diffusion factors given in Appendix 15A and the 0-8 hour breathing rate of 3.47×10^{-4} m^3/sec are applicable.

The resulting doses for the case with the accident-initiated iodine spike are:

	Thyroid	Whole Body	Skin
Exclusion Area Boundary	5.4 rem	0.073 rem	0.11 rem
Low Population Zone	0.69 rem	0.01 rem	0.014 rem
Control Room	0.22 rem	.046 rem	0.009 rem

These doses are well within the limits of 25 rem whole body and 300 rem thyroid defined in 10 CFR 100 and the control room dose limits of 5 rem whole body, 30 rem thyroid, and 30 rem skin defined in Section 6.4 of the Standard Review Plan.

[For information only, the TEDE doses are 0.25 rem at the EAB, 0.032 at the LPZ and 0.053 rem in the control room.]

For the case with the pre-existing iodine spike the doses are:

	Thyroid	Whole Body	Skin
Exclusion Area Boundary	5.3 rem	0.061 rem	0.09 rem
Low Population Zone	0.67 rem	0.008 rem	0.011 rem
Control Room	0.20 rem	0.037 rem	0.008 rem

These doses are well within the limits of 25 rem whole body and 300 rem thyroid defined in 10 CFR 100 and the control room dose limits of 5 rem whole body, 30 rem thyroid, and 30 rem skin defined in Section 6.4 of the Standard Review Plan.

[For information only, the TEDE doses are 0.24 rem at the EAB, 0.03 at the LPZ and 0.043 rem in the control room.]

The parameters that effect the environmental consequences of a steam line break are not adversely affected by the steam generator. Therefore, all acceptance criteria continue to be met on Sequoyah Unit 1 and Unit 2 with the RSGs.

15.5.5 Environmental Consequences of a Postulated Steam Generator Tube Rupture

The postulated accidents involving release of steam from the secondary system will not result in a release of radioactivity unless there is leakage from the Reactor Coolant System to the secondary system in the steam generators. A conservative analysis of the postulated steam generator tube rupture assumes the loss of offsite power and hence involves the release of steam from the secondary system. A conservative analysis of the potential offsite doses resulting from this accident is presented assuming steam generator leakage prior to the postulated accident for a time sufficient to establish equilibrium specific activity levels in the secondary system. Parameters used in the analysis are listed in Table 15.5.5-1.

The following conservative assumptions and parameters are used to calculate the activity releases and offsite doses for the postulated steam generator tube rupture:

1. Prior to the accident, an equilibrium activity of fission products exists in the primary and the secondary systems due to primary to secondary leakage in steam generators.

2. Offsite power is lost, main steam condensers are not available for steam dump.

3. Eight hours after the accident, the residual heat removal system starts operation to cool down the plant.

4. The primary to secondary leakage is evenly distributed in the steam generators.

5. After eight hours following the accident, no steam and activity are released to the environment.

6. No air ejector release and no steam generator blowdown during the accident.

7. Initial primary coolant activity (iodine and noble gas) is consistent with the model discussed in Appendix 15D. This model is consistent with Technical Specification limits on primary coolant activity limits.

8. The analysis assumes an iodine spike with two separate cases considered. For one case there is assumed to be a pre-existing iodine spike. For the second case the initial primary coolant iodine concentration is at the limit set in the Technical Specifications for equilibrium operation and an iodine spike is assumed to be initiated by the reactor trip associated with the event. The iodine spiking models are described in Appendix 15D.

9. Initial secondary coolant activity (iodine) is consistent with the model discussed in Appendix 15D. This model is consistent with Technical Specification limits on primary coolant activity limits. There is no noble gas activity in the secondary coolant.

10. The iodine in the flashed portion of the break flow entering the ruptured steam generator is assumed to be released directly to the environment.

11. With the exception of the iodine in the flashed portion of the break flow entering the ruptured steam generator, the iodine entering the secondary side is assumed to uniformly mix in the steam generator water.

12. The iodine partition factor is $\frac{\text{amount of iodine/unit mass steam}}{\text{amount of iodine/unit mass liquid}} = 0.01$ in the steam generators.

13. Steam release to atmosphere and the associated activity release from the nondefective steam generators is terminated at eight hours after the accident when the residual heat removal system takes over in cooling down the plant.

14. Thirty minutes after the accident, the pressure between the defective steam generator and the primary system is equalized. The defective unit is isolated. No steam and fission product activities are released from the defective steam generator thereafter.

15. The 0-2 and 2-8 hour atmospheric diffusion factors given in Appendix 15A and the 0-8 hour breathing rate of 3.47 x 10^{-4} m^3/sec are applicable.

The resulting doses for the case with the accident-initiated iodine spike are:

	Thyroid	Whole Body	Skin
Exclusion Area Boundary	18.5 rem	1.6 rem	2.8 rem
Low Population Zone	2.3 rem	0.19 rem	0.4 rem

These doses are well within the limits of 25 rem whole body and 300 rem thyroid defined in 10 CFR 100.

[For information only, the TEDE doses are 2.2 rem at the EAB, 0.26 at the LPZ.]

For the case with the pre-existing iodine spike the doses are:

	Thyroid	Whole Body	Skin
Exclusion Area Boundary	41.1 rem	1.4 rem	2.6 rem
Low Population Zone	5.0 rem	0.16 rem	0.4 rem

These doses are well within the limits of 25 rem whole body and 300 rem thyroid defined in 10 CFR 100.

[For information only, the TEDE doses are 2.7 rem at the EAB, 0.32 at the LPZ.]

The safety evaluation for the replacement steam generators concludes that parameters important to the consequences of this event are not adversely affected by the RSG.

The doses given above are based on operators stopping the steam release from the ruptured steam generator by 30 minutes. Should operators take 45 minutes to stop the steam release from the ruptured steam generator, then the maximum offsite doses will be 62 rem to the thyroid and 2.4 rem whole body.

15.5.6 Environmental Consequences of a Postulated Fuel Handling Accident

Two analyses of a postulated fuel handling accident are performed: 1) an event occurring in the Auxiliary Building and 2) an event occurring inside the primary containment. The analyses use methodology from Regulatory Guide 1.183 (Reference 13) associated with the use of alternative source term modeling and do not use the dose calculation methodology presented in Appendix 15A. The parameters used for each of these analyses are listed in Table 15.5.6-1.

The basic analysis assumptions for the fuel handling accident in the Auxiliary Building are:

1. The accident occurs 100 hours after plant shutdown. Radioactive decay of the fission product inventory during the interval between shutdown and placement of the first spent fuel assembly into the spent fuel pool is taken into account.

2. All rods in one assembly rupture.

3. The assembly damaged is the highest powered assembly in the core region to be discharged. The values for individual fission product inventories in the damaged assembly are calculated assuming full power operation at the end of core life immediately preceding shutdown. A radial peaking factor of 1.70 is used.

4. The maximum fuel rod pressurization is 1200 psi.

5. The minimum water depth between the top of the damaged fuel rods and the spent fuel pool surface is 23 feet.

6. All of the gap activity in the damaged rods is released to the spent fuel pool and consists of 5 percent of the total noble gases other than Kr-85, 10 percent of the Kr-85, 5 percent of the total radioactive iodine other than I-131, and 8 percent of the I-131, in the rods at the time of the accident.

7. Noble gases released to the spent fuel pool do not experience retention in the water pool.

8. The iodine gap inventory is composed of inorganic species (99.85 percent) and organic species (0.15 percent).

9. The spent fuel pool decontamination factor for iodine is 200.

10. No credit is taken for natural decay either due to holdup in the Auxiliary Building or after the activity has been released to the atmosphere.

11. The activity released from the pool (iodine and noble gas) is all assumed to be released to the environment over a two-hour period.

If a fuel handling accident should occur inside the primary containment, there are several configurations the plant could be in. The Reactor Building Purge Ventilation System (RBPVS) could be operating, which discharges through the shield building vent. Any number of penetrations and hatches could be open, which could result in a number of different release points. A higher atmospheric dispersion factor will result in a higher dose. The Auxiliary Building vent has the highest atmospheric dispersion factor of all other potential release points. This is the same release point assumed in the fuel handling accident outside containment. Therefore the model for the fuel handling accident inside containment does not differ from that given above.

Doses were determined at the exclusion area boundary (EAB) and at the low population zone boundary (LZP) for the two-hour interval over which releases are assumed to take place and in the control room for an extended period of time after termination of releases in order to address the continued presence of activity in the control room atmosphere.

The accident doses were calculated using the dose model consistent with the use of the alternate source term methodology (Regulatory Guide 1.183) and are reported as Total Effective Dose Equivalent (TEDE).

The TEDE dose is the sum of the Committed Effective Dose Equivalent (CEDE) and the Effective Dose Equivalent (EDE) which are calculated using the following equations:

$$D_{CEDE} = (A)(X/Q)(BR)(DCF_{CEDE})$$

$$D_{EDE} = (A)(X/Q)(DCF_{EDE})$$

where: A = Activity of the nuclide released (Ci)
X/Q = atmospheric dispersion factor (sec/m^3)
BR = breathing rate (m^3/sec)
DCF_{CEDE} = CEDE dose conversion factor (rem/Ci inhaled)
DCF_{EDE} = dose conversion factor (rem-m^3/Ci-s)

	FHA in Auxiliary Building	FHA inside Primary Containment
Exclusion Area Boundary	2.8 rem TEDE	2.8 rem TEDE
Low Population Zone Outer Boundary	0.5 rem TEDE	0.5 rem TEDE
Control Room	0.6 rem TEDE	0.6 rem TEDE

These doses are within the dose acceptance limits of 6.3 rem TEDE for offsite doses (Regulatory Guide 1.183) and 5.0 rem TEDE for the control room dose (GDC 19) associated with the use of alternate source term methodology.

15.5.7 Environmental Consequences of a Postulated Rod Ejection Accident

The consequences of a postulated rod ejection accident are bounded by the results of the loss-of-coolant accident analysis evaluated in Section 15.5.3.

15.5.8 References

1. Not used.

2. Regulatory Guides for Water Cooled Nuclear Power Plants, Regulatory Guide 1.24, "Assumptions Used for Evaluating the Potential Radiological Consequences of a Pressurized Water Reactor Gas Storage Tank Failure," Division of Reactor Standards, U.S. Atomic Energy Commission, March 23, 1972.

3. Regulatory Guide 1.4, "Assumptions Used for Evaluating the Potential Radiological Consequences of a Loss-of-Coolant Accident for Pressurized Water Reactors," Directorate of Regulatory Standards, U.S. Atomic Energy Commission, June 1973.

4. D. D. Malinowski, "Iodine Removal in the Ice Condenser System," WCAP-7426, April 1970.

5. NAA-SR-10100, Conventional Buildings for Reactor Containment.

6. ORNL-NSIC-4, Behavior of Iodine in Reactor Containment Systems, February 1965.

7. Regulatory Guides for Water Cooled Nuclear Power Plants, Regulatory Guide 1.25, "Assumptions Used for Evaluating the Potential Radiological Consequences of a Fuel Handling Accident in the Fuel Handling and Storage Facility for Boiling and Pressurized Water Reactors," Division of Reactor Standards, U.S. Atomic Energy Commission, March 23, 1972.

8. Not used.

9. James Halitsky, Jack Golden, Paul Halpern, and Pal Wu "Wind Tunnel Tests of Gas Diffusion from a Leak in the Shell of a Nuclear Power Reactor and from a Nearby Stack," New York University College of Engineering Research Division, Department of Meteorology and Oceanography Geophysical Sciences Laboratory Report No. 63-2, (1963).

10. K. G. Murphy and K. M. Campe "Nuclear Power Plant Control Room Ventilation System Design for Meeting General Criterion 19," (13th NRC Air Cleaning Conference Proceedings, August 1974, Vol 1, pages 401-430).

11. Ramsdell, J.V. and C.A. Simonen, “Atmospheric Relative Concentration in Building Wakes. Prepared by Pacific Northwest Laboratory for the U.S. Nuclear Regulatory Commission, PNL-10521, NUREG/CR-6331, Rev. 1, May, 1997.

12. Y. Nishizawa, et al., "Vapor Water Partition Coefficient of Iodine and Organic Iodines," ORNL-tr-2255, Nippon Genshiryoku Gakkaishi, 1969.

13. Regulatory Guide 1.183, “Alternative Radiological Source Terms for Evaluating Design Basis Accidents at Nuclear Power Reactors,” Office of Nuclear Regulatory Research, U.S. Nuclear Regulatory Commission, July 2000.

14. Safety Assessment/Evaluation (10CFR50.59) [B38 931027 802].

15. Not used.

16. NE Calculation SQN-APS3-067, "Offsite and Control Room Operator Doses Due to a MHA LOCA With Maximum Allowable Annulus Inleakage."

17. SQN-DC-V-21.0, "Environmental Design Criteria."

18. NE Calculation SQN-TI- RPS-158, "Maximum Offsite Doses Due to the Post Accident Sampling Facility."

19. Not used.

20. Not used.

21. NE Calculation SQN-APS2-44, "Annulus Pressure Transient Analysis Following A LOCA."

22. Not used.

23. Document No. 77-5016198, Framatome ANP, Replacement Steam Generator Report for Sequoyah Unit 1.”

24. Document No. 77-9142036, AREVA NP, “Replacement Steam Generator Report for TVA Sequoyah Unit 2.”

TABLE 15.5.1-1

PARAMETERS USED IN LOSS OF A.C. POWER ANALYSIS

Steam generator tube leak rate during accident	150 gpd per SG
Offsite power	Lost
Reactor Coolant Activity	
Noble Gas Activity Prior to Accident	See Appendix 15D
Iodine Activity Prior to Accident (without spike)	See Appendix 15D
Iodine Activity (pre-existing spike)	21 μCi/g D.E. I-131 (see Appendix 15D)
Equilibrium Iodine Appearance Rates	See Appendix 15D
Increase in Iodine Appearance Rate Increase Due to the Accident-Initiated Spike	500 times equilibrium rates
Duration of Accident-Initiated Spike	1 hour
Secondary Coolant Activity	
Iodine Activity Prior to Accident	0.1 μCi/g D.E. I-131 (see Appendix 15D)
Noble Gas Activity	None
Iodine Chemical Form	Elemental
Iodine partition factor in steam generator during accident	0.01
Duration of plant cooldown by Secondary System after accident	8 hr
Steam release from 4 steam generators	487,000 lb (0-2 hr) 1,090,000 lb (2-8 hr)
Meteorology	Accident (see Appendix 15A)

(1) Based on operating experience of Westinghouse PWR's.

TABLE 15.5.2-1

PARAMETERS USED IN WASTE GAS DECAY TANK RUPTURE ANALYSIS

Plant load factor	1.0
Fuel defects	1 percent
Activity released from GWPS	Noble gas inventory of one Reactor Coolant System volume(1)
Stripping fraction in volume control tank	1.0
Iodine partition factor in volume control tank	0.01
Time of accident	Immediately after shutdown at end of equilibrium core cycle
Meteorology	Accident (see Appendix 15A)

(1) Iodine releases are based on plant operating procedures (degassing of volume control tank every 3 hours for 21 hours after shutdown). At 21 hours after shutdown the summation of the product of the iodine isotopic inventories times their respective dose conversion factor is a maximum.

SQN

TABLE 15.5.2-2

WASTE GAS DECAY TANK INVENTORY (one unit)

(Regulatory Guide 1.24 (1972) Analysis)

Isotope	Activity (Curies)
Xe-133	8.46×10^{4}
Xe-133m	9.35×10^{2}
Xe-135	2.13×10^{3}
Xe-135m	4.80×10^{1}
Xe-138	1.70×10^{2}
Kr-85	4.30×10^{3}
Kr-85m	5.83×10^{2}
Kr-87	3.25×10^{2}
Kr-88	1.02×10^{3}
I-131	5.49×10^{-2}
I-132	4.00×10^{-5}
I-133	4.73×10^{-2}
I-134	- -
I-135	7.09×10^{-3}

TABLE 15.5.3-1 (Sheet 1)

PARAMETERS USED IN LOCA ANALYSES

	Regulatory Guide 1.4 Analysis
Core thermal power	3582 MWt
Primary containment free volume	1.241×10^6 ft^3
Upper primary containment free volume	7.16×10^5 ft^3
Lower primary containment free volume	4.0×10^5 ft^3
Ice condenser free volume	1.25×10^5 ft^3
Annulus free volume	3.75×10^5 ft^3
Primary containment deck fan flow rate	40,000 cfm
Number of deck fans assumed operating	1 of 2
Activity released to primary containment and available for release	
noble gases	100 percent of core inventory
iodines	25 percent of core inventory
Plateout of iodine activity released to primary containment	50 percent
Form of iodine activity in primary containment available for release	
elemental iodine	91 percent
methyl iodine	4 percent
particulate iodine	5 percent
Ice condenser removal efficiency for elemental iodine	See Table 15.5.3-2
Primary containment leak rate	0.25 percent per day (0-24 hours)
	0.125 percent per day (1-30 days)

TABLE 15.5.3-1 (Sheet 2)

PARAMETERS USED IN LOCA ANALYSES

	Regulatory Guide 1.4 Analysis
Percent of primary containment leakage to Auxiliary Building	25 percent
ABGTS filter efficiencies	
elemental iodine	99 percent
methyl iodine	99 percent
particulate iodine	99 percent
Delay time of activity in Auxiliary Building	0.3 hour
Time ABGTS filters are bypassed following LOCA	5 minutes
EGTS total intake flow	3600 cfm, Single Train 7200 cfm, PCO Failure Case*
Percent of annulus free volume available for mixing of activity	50 percent
EGTS exhaust flow rate	See Table 15.5.3-3, Table 15.5.3-3A
EGTS filter efficiencies	
elemental iodine	99 percent**
methyl iodine	99 percent**
particulate iodine	99 percent**
Percent of primary containment leakage to the annulus to EGTS air cleanup units suction	100 percent
Meteorology	Accident (see Appendix 15A)

* 2 of 2 EGTS air cleanup units operate resulting in maximum flow in the event of a failed EGTS exhaust controller.

** Modeled as 98.2% efficiency for elemental, methyl and particulate iodine to account for up to 30 cfm of leakage through the EGTS decay heat cooldown valves.

TABLE 15.5.3-2

ICE CONDENSER IODINE REMOVAL EFFICIENCY[1]

Time Interval Post LOCA (Hours)	Fractional Iodine Removal Efficiency
0.0 to 0.106	0.96
0.106 to 0.133	0.84
0.133 to 0.244	0.71
0.244 to 0.383	0.67
0.383 to 0.522	0.64
0.522 to 0.578	0.62
0.578 to 0.606	0.30
0.606 to 720	0.0

[1] The ice condenser removal efficiencies given in the above table are used for the conservative Regulatory Guide 1.4 analyses. The inlet steam-air mixture coming into the ice condenser is greater than 90 percent steam by volume initially due to the delaying of the operation of the deck fans. Without the delay of operation of the deck fans the amount of steam by volume in the inlet mixture initially would be much lower and the ice condenser iodine removal efficiencies would be reduced. The zero value after 0.606 hours results from all of the ice being melted.

TABLE 15.5.3-3

EMERGENCY GAS TREATMENT SYSTEM FLOW RATES: LARGE BREAK LOCA

Time Interval Post LOCA (Hours)	Recirculation Flow Rate (cfm)	Exhaust Flow Rate (cfm)
0 to 0.00833	0	0
0.00833 to 0.0128	3600	0
0.0128 to 0.01306	3525	75
0.01306 to 0.01333	3060	540
0.01333 to 0.01361	2387	1213
0.01361 to 0.01389	1662	1938
0.01389 to 0.01417	967	2633
0.01417 to 0.0144	340	3260
0.0144 to 0.02083	0	3600
0.02083 to 0.025	295	3305
0.025 to 0.0333	266	3334
0.0333 to 0.05	474	3126
0.05 to 0.0667	913	2687
0.0667 to 0.106	1337	2263
0.106 to 0.133	1857	1743
0.133 to 0.16111	2427	1173
0.16111 to 0.244	2647	953
0.244 to 0.3111	3600	0
0.3111 to 0.33889	3455	145
0.33889 to 0.383	3346	254
0.383 to 0.41667	3253	347
0.41667 to 0.522	3213	387
0.522 to 720.0	3100	500

NOTE: The above airflow rates do not take into account 92 cfm leakage from the EGTS ductwork.

Table 15.5.3-3A

EMERGENCY GAS TREATMENT SYSTEM FLOW RATES: LARGE BREAK LOCA, TWO FANS, FAILED DAMPER CONTROLLER

Time Interval Post LOCA (Hours)	Recirculation Flow Rate (cfm)	Exhaust Flow Rate (cfm)
0 to 0.00833	0	0
0.00833 to 0.01278	6755	0
0.01278 to 0.01306	6605	150
0.01306 to 0.01333	5674	1081
0.01333 to 0.01361	4329	2426
0.01361 to 0.01389	2880	3875
0.01389 to 0.01417	1488	5267
0.01417 to 0.01444	234	6521
0.01444 to 0.01472	0	6680
0.01472 to 0.01528	3755	3000
0.01528 to 0.01694	3655	3100
0.01694 to 0.01944	3555	3200
0.01944 to 0.03833	3420	3335
0.03833 to 0.04306	3555	3200
0.04306 to 0.04694	3655	3100
0.04694 to 0.08639	3755	3000
0.08639 to 0.10527	4755	2000
0.10527 to 720	5118	1637

Note: The above airflow rates do not take into account 92 cfm leakage from the EGTS ductwork.

TABLE 15.5.3-4

OFFSITE DOSES FROM LOSS OF COOLANT ACCIDENT, SINGLE TRAIN OF EGTS (Unit 1 & 2)

	Site Boundary (0 – 2 Hours) 509 meters	Low Population Zone (0 – 30 days) 4828 meters	10 CFR 100 Guideline Limits
Gamma Dose (rem)	5.16E+00	1.35E+00	2.50E+01*
Beta Dose (rem)	3.02E+00	1.49E+00	3.00E+02
Thyroid Dose (rem)	4.61E+01	6.88E+00	3.00E+02

OFFSITE DOSES FROM LOSS OF COOLANT ACCIDENT, PCO FAILURE (Unit 2 Only)

	Site Boundary (0 – 2 Hours) 509 meters	Low Population Zone (0 – 30 days) 4828 meters	10 CFR 100 Guideline Limits
Gamma Dose (rem)	6.50E+00	1.63E+00	2.50E+01*
Beta Dose (rem)	3.89E+00	1.67E+00	3.00E+02
Thyroid Dose (rem)	4.56E+01	7.62E+00	3.00E+02

*Whole Body Dose

TABLE 15.5.3-5

LOCA SOURCE TERM ACTIVITIES FOR CONTROL ROOM AND OFFSITE DOSE ANALYSES

(Reference 16)

NUCLIDE			CONTAINMENT SOURCE ACTIVITY
1	Kr	83m (1)	5.960E+04
2	Kr	85m	1.240E+05
3	Kr	85	5.350E+03
4	Kr	87	2.490E+05
5	Kr	88	3.450E+05
6	Kr	89	4.290E+05
7	Xe	131m	5.430E+03
8	Xe	133m	3.190E+04
9	Xe	133	9.920E+05
10	Xe	135m	2.100E+05
11	Xe	135	3.330E+05
12	Xe	138	8.640E+05
13	I	131	4.700E+05
14	I	132	6.890E+05
15	I	133	9.700E+05
16	I	134	1.080E+06
17	I	135	9.260E+05
18	I* (2)	131	1.960E+04
19	I*	132	2.870E+04
20	I*	133	4.040E+04
21	I*	134	4.480E+04
22	I*	135	3.860E+04

The above activities represent 1 of 193 nuclear fuel assemblies within the reactor core at 1000 EFPD and having a U235 enrichment of 5%. These activities are in accordance with Regulatory Guide 1.4 consisting of 100% of the Noble Gases and 25% of the Iodine. The Iodine inventory consist of 96% elemental and 4% methyl.

(1) m denotes metastable state for the given isotope.
(2) I* denotes an organic Iodine.

TABLE 15.5.3-6

ATMOSPHERIC DILUTION FACTORS AT CONTROL BUILDING

Time Period (hour)	Diluting Factor[1] (sec/m^3)
0 - 2	5.63E-04
2 - 8	3.78E-04
8 - 24	1.12E-04
24 - 96	9.38E-05
96 - 720	6.96E-05

[1]Onsite meteorology for April 2, 1971 - March 31, 1972.

TABLE 15.5.3-7

CONTROL ROOM PERSONNEL DOSE FOR DBA POST ACCIDENT PERIOD, SINGLE TRAIN OF EGTS (Unit 1 and 2)

(Reference 16)

Source	Whole Body Gamma Dose (rem)*	Beta Dose (rem)*	Thyroid Dose (rem)*
Control room airborne activity	6.60E-01	5.87E+00	1.76E+00
External cloud shine	4.60E-01	0.00E+00	0.00E+00
Ingress-Egress	4.21E-02	8.99E-02	2.41E-01
ECCS Leakage	4.59E-03	8.77E-03	1.95E-02
Total	1.17E+00	5.96E+00	2.02E+00

CONTROL ROOM PERSONNEL DOSE FOR DBA POST ACCIDENT PERIOD, PCO FAILURE (Unit 2 Only)

(Reference 16)

Source	Whole Body Gamma Dose (rem)*	Beta Dose (rem)*	Thyroid Dose (rem)*
Control room airborne activity	7.56E-01	6.79E+00	1.91E+00
External cloud shine	5.75E-01	0.00E+00	0.00E+00
Ingress-Egress	4.40E-02	9.03E-02	3.07E-01
ECCS Leakage	4.59E-03	8.78E-03	2.00E-02
Total	1.38E+00	6.89E+00	2.24E+00

*Includes occupancy factor: 100 percent occupancy 0-24 hours
60 percent occupancy 1-4 days
40 percent occupancy 4-30 days

TABLE 15.5.3-8
(Sheet 1)

CONTAINMENT ATMOSPHERE AND SUMP
LOCA SOURCE TERM ACTIVITIES

NUCLIDE	CI PER ASSEMBLY	NUCLIDE	CI PER ASSEMBLY	NUCLIDE	CI PER ASSEMBLY
1 KRM 83	5.960E+04	21 I 134	1.080E+06	42 SE 84	1.080E+05
2 KRM 85	1.240E+05	22 I 135	9.260E+05	43 SR 89	4.840E+05
3 KR 85	5.350E+03	23 IM 136	2.070E+05	44 SR 90	4.630E+04
4 KR 87	2.490E+05	24 BR 83	5.960E+04	45 SR 91	6.030E+05
5 KR 88	3.450E+05	25 BRM 84	2.950E+03	46 SR 92	6.410E+05
6 KR 89	4.290E+05	26 BR 84	1.110E+05	47 SR 93	7.240E+05
7 KR 90	4.590E+05	27 BR 85	1.230E+05	48 SR 94	7.220E+05
8 XEM 131	5.430E+03	28 BR 87	1.960E+05	49 Y 90	4.910E+04
9 XEM 133	3.190E+04	29 CS 134	8.610E+04	50 YM 91	3.500E+05
10 XE 133	9.920E+05	30 CS 135	0.0	51 Y 91	6.270E+05
11 XEM 135	2.100E+05	31 CS 136	3.050E+04	52 Y 92	6.460E+05
12 XE 135	3.330E+05	32 CS 137	6.040E+04	53 Y 93	4.910E+05
13 XE 137	9.230E+05	33 CS 138	9.360E+05	54 Y 94	7.800E+05
14 XE 138	8.640E+05	34 CS 139	8.720E+05	55 Y 95	8.110E+05
15 XE 139	6.410E+05	35 CS 140	7.830E+05	56 Y 96	7.830E+05
16 XE 140	4.460E+05	36 CS 141	5.970E+05	57 ZR 95	8.660E+05
17 I 130	9.590E+03	37 RB 88	3.540E+05	58 ZR 97	8.350E+05
18 I 131	4.700E+05	38 RB 89	4.620E+05	59 NB 95	8.740E+05
19 I 132	6.890E+05	39 RBM 90	1.340E+05	60 NBM 97	7.920E+05
20 I 133	9.700E+05	40 RB 90	4.250E+05	61 NB 97	8.400E+05
		41 RB 91	5.620E+05	62 MO 99	9.220E+05

The above activities represent 1 of 193 nuclear fuel assemblies within the reactor core at 1000 EFPD and having a U235 enrichment of 5%. Reference 17.

TABLE 15.5.3-8
(Sheet 2)

CONTAINMENT ATMOSPHERE AND SUMP
LOCA SOURCE TERM ACTIVITIES

NUCLIDE	CI PER ASSEMBLY	NUCLIDE	CI PER ASSEMBLY	NUCLIDE	CI PER ASSEMBLY
63 TCM 99	8.110E+05	84 TEM 129	3.010E+04	105 PR 143	7.460E+05
64 TC 99	0.0	85 TE 129	1.490E+05	106 PR 144	6.730E+05
65 TC 101	8.360E+05	86 TEM 131	9.620E+04	107 PR 145	5.210E+05
66 RU 103	7.660E+05	87 TE 131	4.140E+05	108 NP 239	9.690E+06
67 RU 106	5.200E+05	88 TE 132	7.050E+05	109 I* 130	4.000E+02
68 RU 106	2.590E+05	89 TEM 133	4.520E+05	110 I* 131	1.960E+04
69 RU 107	2.990E+05	90 TE 133	5.490E+05	111 I* 132	2.870E+04
70 REM 103	7.650E+05	91 TE 134	8.950E+05	112 I* 133	4.040E+04
71 RHM 105	1.480E+05	92 BAM 137	5.740E+04	113 I* 134	4.480E+04
72 RH 105	4.950E+05	93 BA 139	8.940E+05	114 I* 135	3.860E+04
73 RH 106	2.7600E+05	94 BA 140	8.980E+05	115 IM* 136	8.640E+03
74 RH 107	2.990E+05	95 BA 141	8.100E+05		
75 SN 130	1.650E+05	96 BA 142	7.710E+05		
76 SB 127	4.170E+04	97 LA 140	9.290E+05		
77 SB 129	1.570E+05	98 LA 141	8.170E+05		
78 SBM 130	2.210E+05	99 LA 142	7.990E+05		
79 SB 130	5.200E+04	100 LA 143	7.590E+05		
80 SB 133	3.200E+05	101 CE 141	8.250E+05		
81 TEM 125	1.000E+02	102 CE 143	7.650E+05		
82 TEM 127	6.870E+03	103 CE 144	6.690E+05		
83 TE 127	4.110E+04	104 CE 145	5.200E+05		

The above activities represent 1 of 193 nuclear fuel assemblies within the reactor core at 1000 EFPD and having a U235 enrichment of 5%. Reference 17.

SQN-18

TABLE 15.5.4-1

PARAMETERS USED IN STEAM LINE BREAK ANALYSIS

Reactor Coolant Activity	
Noble Gas Activity Prior to Accident	See Appendix 15D
Iodine Activity Prior to Accident (without spike)	See Appendix 15D
Iodine Activity (pre-existing spike)	21 μCi/g D.E. I-131 (see Appendix 15D)
Equilibrium Iodine Appearance Rates	See Appendix 15D
Increase in Iodine Appearance Rate Increase Due to the Accident-Initiated Spike	500 times equilibrium rates
Duration of Accident-Initiated Spike	1 hour
Secondary Coolant Activity	
Iodine Activity Prior to Accident	0.1 μCi/g D.E. I-131 (see Appendix 15D)
Noble Gas Activity	None
Iodine Chemical Form	Elemental
Primary to Secondary Leak Rate (per steam generator)	150 gpd
Steam Release from Intact Steam Generators	
0-2 hours	4.79E5 lb
2-8 hours	1.03E6 lb
>8 hours	none
Blowdown of Faulted Steam Generator to Release the Initial Inventory of Activity	1.48E5 lb over 10 minutes
Intact Steam Generator Iodine Partition Factor	0.01
Faulted Steam Generator Iodine Partition Factor	1.0
Offsite Power	Lost
Atmospheric Dispersion Factor	Accident (see Appendix 15A)
Breathing Rate	3.74E-4m^3/sec
Control Room Parameters	
Volume	2.6E5 cubic feet
Filtered intake flow	1000 cfm
Filtered recirculation flow	2600 cfm
Filter efficiency for iodine	95%
Unfiltered inleakage	51 cfm
Atmospheric dispersion factor (X/Q)	
0-2 hours	1.93E-3 sec/m^3
2-8 hours	7.02E-4 sec/m^3
Occupancy factor	1.0
Breathing rate	3.47E-4m^3/sec

TABLE 15.5.5-1 (Sheet 1)

PARAMETERS USED IN STEAM GENERATOR TUBE RUPTURE ANALYSIS

Reactor Coolant Activity	
Noble Gas Activity Prior to Accident	See Appendix 15D
Iodine Activity Prior to Accident (without spike)	See Appendix 15D
Iodine Activity (pre-existing spike)	21 μCi/g D.E. I-131 (see Appendix 15D)
Equilibrium Iodine Appearance Rates	See Appendix 15D
Increase in Iodine Appearance Rate due to the Accident-Initiated Spike	500 times equilibrium rates
Duration of Accident-Initiated Spike	1 hour
Secondary Coolant Activity	
Iodine Activity Prior to Accident	0.1 μCi/g D.E. I-131 (see Appendix 15D)
Noble Gas Activity	None
Iodine Chemical Form	Elemental
Steam generator tube leak rate	150 gpd per SG
Off-site power	Lost on reactor trip
Time of reactor trip	65 sec
Iodine partition factor in non-defective steam generators prior to and during accident	0.01
Iodine partition factor in defective steam generator prior to accident	0.01
Iodine partition factor in condenser prior to reactor trip	0.01
Time to isolate ruptured steam generator (generic assumption for dose analysis)	30 min
Duration of plant cooldown by Secondary System after accident	8 hour
Tube Rupture Break Flow	
0 - 65 seconds	8400 lb
65 - 1800 seconds	164,300 lb
Percentage of Break Flow that Flashes (average over time interval)	
0 - 65 seconds	18.0%
65 - 1800 seconds	4.74%

TABLE 15.5.5-1 (Sheet 2)

PARAMETERS USED IN STEAM GENERATOR TUBE RUPTURE ANALYSIS

Steam Release from Ruptured Steam Generator (not including contribution from flashed break flow)	
0 - 65 seconds	76,588 lb
65 - 1800 seconds	62.312 lb
Steam Release from Intact Steam Generators	
0 - 65 seconds	232,000 lb
65 - 1800 seconds	170,000 lb
0.5 - 2 Hours	360,000 lb
2 - 8 Hours	1,237,000 lb
Meteorology	Accident (See Appendix 15A)

TABLE 15.5.6-1 (Sheet 1)

PARAMETERS USED IN FUEL HANDLING ACCIDENT ANALYSES

Time between plant shutdown and accident	100 hours
Average fuel assembly activity (curies) (No decay)[1]	
I-131	4.90E5 Ci
I-132	7.18E5 Ci
I-133	1.01E6 Ci
I-135	9.65E5 Ci
Kr-85	5.35E3 Ci
Xe-131m	5.43E3 Ci
Xe-133m	3.19E4 Ci
Xe-133	9.92E5 Ci
Xe-135	3.33E5 Ci
Te-131m	9.62E4 Ci
Te-132	7.05E5 Ci
Radial peaking factor	1.7
Fuel rod gap fraction[2]	
I-131	0.08
Kr-85	0.10
Other iodines and noble gases	0. 05
Fuel damage	One assembly
Iodine species split	
Elemental	99.85%
Organic	0.15%
Pool scrubbing factor	
Iodine	200
Noble gases	1
Breathing rate	3.50E-4 m^3/sec

[1] Only the iodines and noble gases having a significant presence after 100 hours are included in the list. The Te-131m and Te-132 are included since they produce I-131 and I-132 respectively as decay products.

[2] These gap fractions are dependent on limiting the high burnup fuel rods (>54,000 MWD/MTU) to a maximum linear heat generation rate of <6.3 kW/ft, peak rod average power.

TABLE 15.5.6-1 (Sheet 2)

PARAMETERS USED IN FUEL HANDLING ACCIDENT ANALYSES

Atmospheric dispersion factor	
EAB	8.59E-4 sec/m^3
LPZ outer boundary	1.39E-4 sec/m^3
FHA Outside Containment	
Release path filter efficiency for iodines	None
Isolation of release path	None
Duration of releases	2 hours
FHA Inside Containment	
Release path filter efficiency for iodines	None
Isolation of purge release path	Immediately
Duration of releases	0 - 2 hr
Control Room Dose Analysis Parameters	
Volume	2.6E5 cubic feet
Normal operation inflow (unfiltered)	3200 cfm
Air intake high radiation setpoint to actuate HVAC emergency mode	400 cpm
Time to switch to emergency mode after signal	5 min
Emergency mode filtered intake flow	1000 cfm
Emergency mode filtered recirculation flow	2600 cfm
Filter efficiency for iodine	95%
Unfiltered inleakage	51 cfm
Atmospheric dispersion factor (X/Q)	
FHA outside containment (0 - 2 hr)	2.56E-3 sec/m^3
FHA inside containment 0 – 2 hr	2.56E-3 sec/m^3
Occupancy factor	
0 -24 hours	1.0
24 - 96 hours	0.6
96 - 720 hours	0.4
Breathing rate	3.50E-4 m^3/sec

TABLE 15.5.6-1 (Sheet 3)

PARAMETERS USED IN FUEL HANDLING ACCIDENT ANALYSES

Nuclide Decay Constants (hr^{-1})	
I-131	3.5833E-3
I-132	3.0401E-1
I-133	3.3320E-2
I-135	1.0486E-1
Kr-85	7.3692E-6
Xe-131m	2.4269E-3
Xe-133m	1.2836E-2
Xe-133	5.4594E-3
Xe-135	7.5755E-2
Te-131m	2.3105E-3
Te-132	8.8638E-3
Committed Effective Dose Equivalent DCF (rem/Ci inhaled)	
I-131	3.29E4
I-132	3.81E2
I-133	5.85E3
I-135	1.23E3
Kr-85	N/A
Xe-131m	N/A
Xe-133m	N/A
Xe-133	N/A
Xe-135	N/A
Effective Dose Equivalent DCF (rem-m^3/Ci-s)	
I-131	6.734E-2
I-132	4.144E-1
I-133	1.088E-1
I-135	2.953E-1
Kr-85	4.403E-4
Xe-131m	1.439E-3
Xe-133m	5.069E-3
Xe-133	5.772E-3
Xe-135	4.403E-2

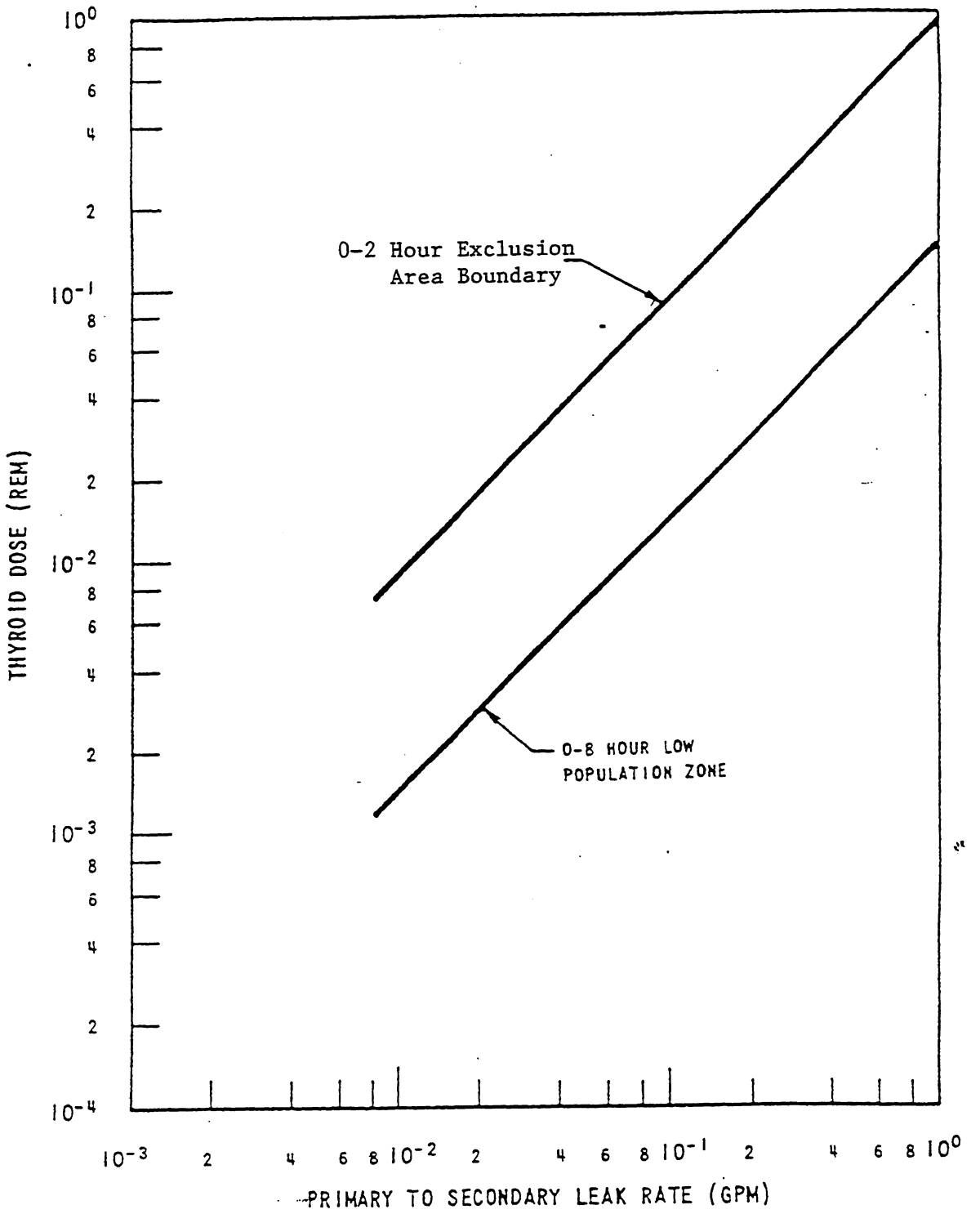

Figure 15.5.1-1 Loss of AC Power - Thyroid Dose

Revised by Amendment 10

Best Available Historical Image

6872-63

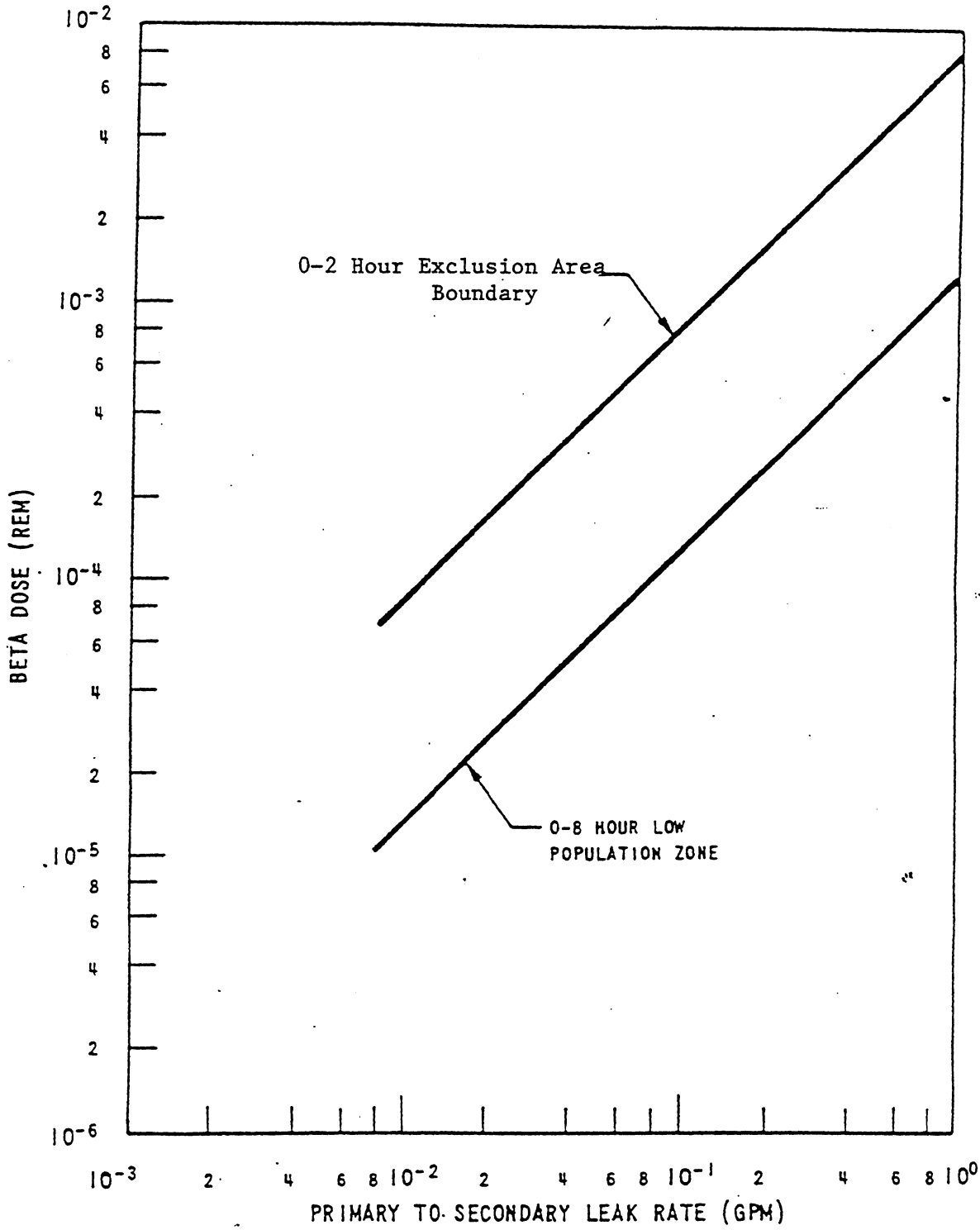

Figure 15.5.1-2 Loss of AC Power - Beta Dose

Revised by Amendment 10

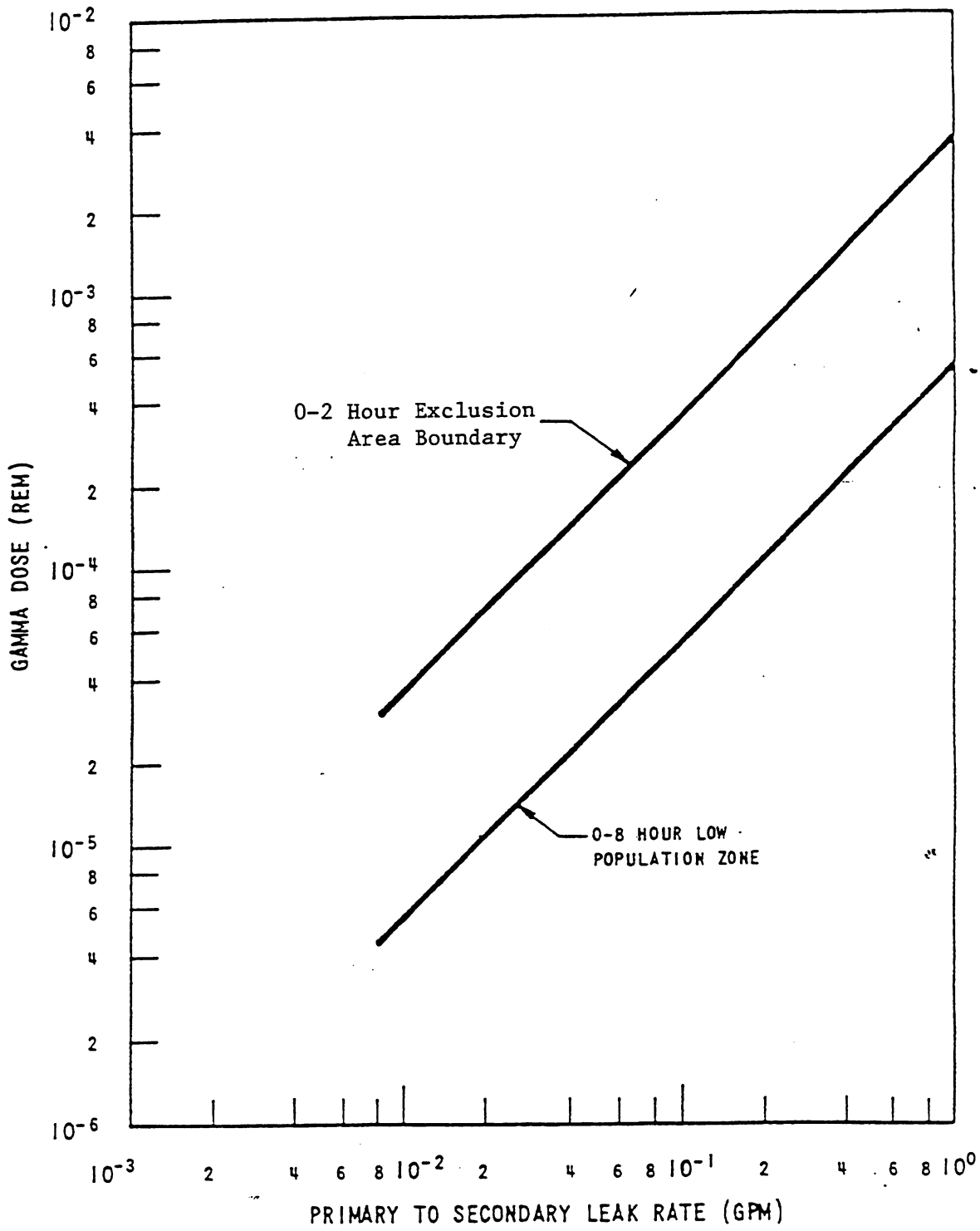

Figure 15.5.1-3 Loss of AC Power - Gamma Dose

Revised by Amendment 10

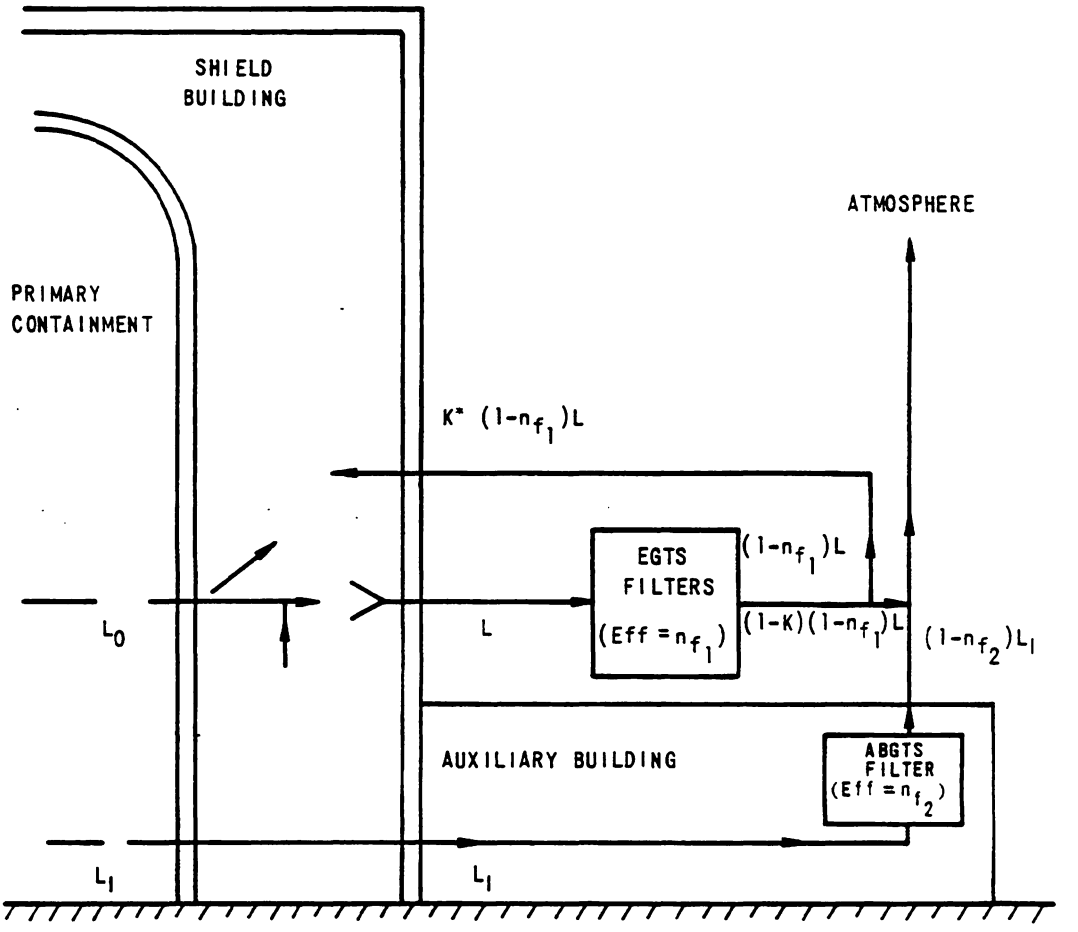

*RECIRCULATION FLOW RATE

Figure 15.5.3-1 Schematic of Leakage Path

APPENDIX 15A

DOSE MODELS USED TO EVALUATE THE ENVIRONMENTAL CONSEQUENCES OF ACCIDENTS

TABLE OF CONTENTS

Section	Title	Page
15A.1	Introduction	15A-2
15A.2	Assumptions	15A-2
15A.3	Whole Body Dose and Skin Dose	15A-2
15A.4	Thyroid Dose	15A-3
15A.5	Total Effective Dose Equivalent	15A-4
15A.6	References	15A-4

LIST OF TABLES

Number	Title
15A-1	Physical Data for Isotopes
15A-2	Accident Atmospheric Dilution Factors

APPENDIX 15A

DOSE MODELS USED TO EVALUATE THE ENVIRONMENTAL CONSEQUENCES OF ACCIDENTS

15A.1 Introduction

This Appendix identifies the models used to calculate the offsite radiological doses that would result from releases of radioactivity due to various postulated accidents. The postulated accidents are:

1. Waste Gas Decay Tank Rupture
2. Steam Generator Tube Rupture
3. Steam Line Break
4. Loss of A.C. Power
5. Rod Ejection Accident
6. Loss-of-Coolant Accident

The radiological consequences analysis for the Fuel Handling Accident does not use the modeling described here but instead uses the modeling associated with the use of alternate source term methodology as discussed in Section 15.5.6.

15A.2 Assumptions

The following assumptions are basic to both the model for the whole body and skin doses due to immersion in a cloud of radioactivity and the model for the thyroid dose due to inhalation of radioactivity.

1. Direct radiation from the source point is negligible compared to gamma and beta radiation due to submersion in the radioactivity leakage cloud.

2. All radioactivity releases are treated as ground level releases regardless of the point of discharge.

3. The dose receptor is a standard man as defined by the International Commission on Radiological Protection (ICRP II) (Reference 1).

4. Radioactive decay from the point of release to the dose receptor is neglected.

5. Isotopic data such as decay constants and dose conversion factors are as provided in Table 15A-1.

15A.3 Whole Body Dose and Skin Dose

The whole body and skin doses delivered to a dose receptor are obtained by considering the dose receptor to be immersed in a radioactive cloud which is infinite in all directions above the ground plane, i.e., an "infinite semispherical cloud." The concentration of radioactive material within this cloud is taken to be uniform and equal to the maximum centerline ground level concentration that would exist in the cloud at the appropriate distance from the point of release. Equations describing an infinite semispherical cloud were used to calculate the doses for a given time period as follows: (Reference 3).

Skin Dose (Rem) = $\left(\frac{X}{Q}\right)_t \sum_1 A_i (DCF_{SDE})_i$

and

Gamma Dose (Rem) = $\left(\frac{X}{Q}\right)_t \sum_1 A_i (DCF_{EDE})_i$

Where:.

A_i is the activity of isotope i released during a given time period t, curies

$\left(\frac{X}{Q}\right)_t$ is the atmospheric dilution factor for a given time period t, sec/m^3

$(DCF_{SDE})_i$ is the shallow dose equivalent Dose Conversion Factor for isotope i, rem-m^3/Ci-sec (Table 15A-1)

$DCF_{EDE})_i$ is the effective dose equivalent Dose Conversion Factor for isotope i, rem-m^3/Ci-sec (Table 15A-1)

15A.4 Thyroid Dose

The thyroid dose for a given time period t, is obtained from the following expression:

$$D = (X/Q)_t B_t \sum_i A_i (DCF_{thy})_i$$

where:

D	= thyroid dose, rem
$(X/Q)_t$	= atmospheric dispersion factor for time interval t, sec/m^3
B_t	= breathing rate for time interval t, m^3/sec (Table 15A-1)
A_i	= total activity of iodine isotope i released in time period t, curies
$(DCF_{thy})_i$	= dose conversion factor for iodine isotope, i, rem/curie inhaled (Table 15A-1)

The breathing rates are consistent with the guidance of Regulatory Guide 1.4 (Reference 2):

0 – 8 hours	3.47E-4 m^3/sec
8 – 24 hours	1.75E-4 m^3/sec
>24 hours	2.32E-4 m^3/sec

15A.5 Total Effective Dose Equivalent

The accident radiological consequences are also calculated in the form of Total Effective Dose Equivalent (TEDE) for information only. The TEDE dose is defined as being the sum of the whole body dose plus the Committed Effective Dose Equivalent (CEDE) dose. The CEDE dose is obtained from the following expression:

$$D_{CEDE} = (X/Q)_t \, B_t \, \Sigma_i \, A_i \, (DCF_{CEDE})_i$$

Where:

	$(X/Q)_t$	= atmospheric dispersion factor for time interval t, sec/m^3
	B_t	= breathing rate for time interval t, m^3/sec
	A_i	= activity of isotope i released during time interval t, Ci
	$(DCF_{CEDE})_i$	= CEDE DCF for isotope i, rem/Ci (Table 15A-1)

15A.6 References

1. "Report of ICRP Committee II on Permissible Dose for Internal Radiation (1959)," Health Physics Vol. 3, pp. 30, 146-153, 1960.

2. Regulatory Guide 1.4 "Assumptions Used for Evaluating the Potential Radiological Consequences of a Loss-of-Coolant Accident for Pressurized Water Reactors," USAEC, June 1973.

3. EPA Federal Guidance Report No. 11, “Limiting Values of Radionuclide Intake and Air Concentration and Dose Conversion Factors for Inhalation, Submersion and Ingestion” EPA-520/1-88-020, September 1988.

4. EPA Federal Guidance Report No. 12, “External Exposure to Radionuclides in Air, Water, and Soil,” EPA 402-R-93-081, September 1993.

TABLE 15A-1

PHYSICAL DATA FOR ISOTOPES

Nuclide	Decay Constant (hr^{-1})	Thyroid DCF(1) (rem/Ci inhaled)	Effective Dose Equivalent DCF(2) ($rem\text{-}m^3/Ci\text{-}s$)	Shallow Dose Equivalent DCF(2) ($rem\text{-}m^3/Ci\text{-}s$)	Committed Effective Dose Equivalent DCF(1) (rem/Ci inhaled)
1-131	3.5833E-3	1.080E6	6.734E-2	1.103E-1	3.29E4
1-132	3.0401E-1	6.438E3	4.144E-1	5.846E-1	3.81E2
1-133	3.3320E-2	1.798E5	1.088E-1	2.157E-1	5.85E3
1-134	7.9067E-1	1.066E3	4.810E-1	6.919E-1	1.31E2
1-135	1.0486E-1	3.130E4	2.953E-1	4.107E-1	1.23E3
Kr-85m	1.5472E-1	N/A	2.768E-2	8.288E-2	N/A
Kr-85	7.3692E-6	N/A	4.403E-4	4.884E-2	N/A
Kr-87	5.4508E-1	N/A	1.524E-1	5.069E-1	N/A
Kr-88	2.4755E-1	N/A	3.774E-1	4.995E-1	N/A
Xe-131m	2.4269E-3	N/A	1.439E-3	1.783E-2	N/A
Xe-133m	1.2836E-2	N/A	5.069E-3	3.848E-2	N/A
Xe-133	5.4594E-3	N/A	5.772E-3	1.839E-2	N/A
Xe-135m	2.6574E0	N/A	7.548E-2	1.099E-1	N/A
Xe-135	7.5755E-2	N/A	4.403E-2	1.154E-1	N/A
Xe-138	2.9350E0	N/A	2.135E-1	3.959E-1	N/A

Note: 1. From EPA Federal Guidance Report No. 11 (Reference 3)

2. From EPA Federal Guidance Report No. 12 (Reference 4)

TABLE 15A-2

ACCIDENT ATMOSPHERIC DILUTION FACTORS[1]
(sec/m^3)

SEQUOYAH NUCLEAR PLANT

Time Period (hours)	Exclusion Area Boundary 556 Meters	Low Population Zone 4828 Meters
0 - 2	1.64×10^{-3}	1.96×10^{-4}
2 - 8		2.46×10^{-5}
8 - 24		2.02×10^{-5}
24 - 96		1.03×10^{-5}
96 - 720		4.77×10^{-6}

[1] Based on onsite meteorology for April 2, 1971 - March 31, 1972. The method used in calculating the values is presented in Section 2.3.4.

APPENDIX 15B

SENSITIVITY ANALYSIS OF LOCA DOSE CALCULATIONS

HISTORICAL INFORMATION)

TABLE OF CONTENTS

Section	Title	Page
15B.1	Introduction	15B-3
15B.2	Parameteric Study	15B-3
15B.3	The Effect of Ice Condenser Iodine Removal	15B-3
15B.4	Sensitivity of Releases to Holdup in the Auxiliary Building	15B-3
15B.5	Sensitivity of Releases to the Assumed Fraction Entering the EGTS Suction Directly	15B-4
15B.6	Sensitivity of Releases to Annulus Holdup Effectiveness	15B-5
15B.7	Dose Models	15B-5
15B.8	Conclusions	15B-6

LIST OF TABLES

Number	Title
15B-1	Parametric Study of LOCA
15B-2	Ice Condenser Iodine Removal Effects - 2 Hour Thyroid Doses (REM)
15B-3	Ice Condenser Iodine Removal Effects - 30 Day Thyroid Doses (REM)

APPENDIX 15B

SENSITIVITY ANALYSIS OF LOCA DOSE CALCULATIONS

(HISTORICAL INFORMATION)

LIST OF FIGURES

Number	Title
15B-1	Effect of Delay in the Auxiliary Building Release on 2 Hour Doses at the Exclusion Area Boundary
15B-2	Effect of Delay in the Auxiliary Building Release on 30 Day Doses at the Low Population Zone
15B-3	Effect of Leakage Directly Into the EGTS Suction Header on 2 Hour Doses at the Exclusion Area Boundary
15B-4	Effect of Leakage Directly Into the EGTS Suction Header on 30 Day Doses at the Low Population Zone
15B-5	Effect of Assumed Annulus Volume on 2 Hour Dose at Exclusion Area Boundary
15B-6	Effect of Decay During Downwind Transport on 2 Hour Doses at Exclusion Area Boundary
15B-7	Effect of Decay During Downwind Transport for Various Wind Speeds on 2 Hour Doses at Exclusion Area Boundary
15B-8	Effect of Decay During Downwind Transport for Various Wind Speeds on 2 Hour Doses at Exclusion Area Boundary
15B-9	Effect of Exposure Time on Exclusion Area Boundary Doses
15B-10	Effect of Decay During Downwind Transport for Various Wind Speeds on Doses at the Exclusion Area Boundary in the First 2 Hours of Exposure
15B-11	Effect of Decay During Downwind Transport for Various Wind Speeds on Doses at the Exclusion Area Boundary in the First 2 Hours of Exposure

APPENDIX 15B

SENSITIVITY ANALYSIS OF LOCA DOSE CALCULATIONS

(HISTORICAL INFORMATION)

15B.1 Introduction

The critical parameters which affect offsite doses from the postulated LOCA were investigated to determine the sensitivity of the doses to these parameters. The effect of the ice condenser iodine removal is given as well as an analysis of the key conservatisms in the dose model.

15B.2 Parametric Study

Table 15B-1 gives the results of 9 cases and the assumptions used. Assumptions not listed in Table 15B-1 are identical to those used in Subsection 15.5.3 for the core release source. Case 1 is the base case which is discussed in Subsection 15.5.3 and is used as the reference case when relative doses are presented. The cases given in Table 15B-1 along with other calculations are the basis for the discussion of sensitivity.

15B.3 The Effect of Ice Condenser Iodine Removal

The removal of elemental iodines by the ice bed following blowdown is discussed in Subparagraph 6.2.3.3.4. The effect of the ice condenser, (along with the charcoal filters) using the efficiencies given in Table 15.5.3-2 is to reduce the offsite doses due to elemental iodines to the same magnitude as that due to organic iodines, at times in excess of about 0.2 hours. Therefore, increased ice condenser removal of elemental iodines (or any other removal system for elemental iodines) will not significantly reduce thyroid doses.

Table 15B-2 shows the two hour thyroid exclusion area boundary doses calculated for several cases with and without ice condenser iodine removal credit using the TID-14844 source term. Dose reduction factors (DRFs) are given for total thyroid doses as well as for the release components (via the annulus and via the Auxiliary Building). All DRFs are in the neighborhood of 3.75. The DRFs for the releases via the annulus are lowest and reflect the importance of the high initial EGTS exhaust rate on these releases. Over the period when the exhaust flow is high the ice condenser has not yet had time to fully reduce the elemental iodine inventory.

Table 15B-3 gives similar information for the 30-day doses at the LPZ distance. The DRFs are in the neighborhood of 4.25 for the 30-day doses. The DRFs for the annulus releases would be expected to be lower than those for the Auxiliary Building releases due to the importance of the first half hour on annulus releases and because multiple passes through the EGTS charcoal filters reduce the relative importance of elemental iodines slightly.

15B.4 Sensitivity of Releases to Holdup in the Auxiliary Building

The model used to describe transport of radioactivity through the Auxiliary Building to the Auxiliary Building Gas Treatment System (ABGTS) is based on a constant delay time between leakage and exhaust. This delay time is used to calculate the reduction in activity release due to decay, but is neglected when considering the time of exposure to the release, i.e., the 2-hour dose is calculated on the basis of the release from the EGTS for the first two hours plus the release from the primary containment to the Auxiliary Building for the first two hours reduced by decay.

APPENDIX 15B

SENSITIVITY ANALYSIS OF LOCA DOSE CALCULATIONS

(HISTORICAL INFORMATION)

The decay time was determined by investigating probable leakage and transport paths to and through the Auxiliary Building. The Auxiliary Building free volume is approximately 3.5 million cubic feet. The ABGTS design flow rate is 9,000 cfm per train. Each train is capable of maintaining the Auxiliary Building at negative pressure, since inleakage is expected to be less than 8,000 cfm. However, even with both systems operating at capacity, the exhaust rate is about 0.3 volumes per hour, providing a mean holdup time of more than 3 hours. For conservatism no delay time was used for the base case.

The ABGTS will reduce the pressure in the Auxiliary Building in less than 10 minutes to the point where no outleakage is assured. Case 9 of Table 15B-1 shows the doses to be expected at the exclusion area boundary and the LPZ distance under the assumptions of ice condenser removal credit, 90 percent containment leakage directly to the EGTS suction, with the remaining 10 percent going directly to the environment for the first 10 minutes following the LOCA and to the Auxiliary Building thereafter where the activity will experience a 0.3 hour average delay.

Figure 15B-1 shows the relative dose for the first two hours at the exclusion area boundary as a function of decay time in the Auxiliary Building. Figure 15B-2 gives similar information for the 30-day doses at the LPZ distance. Note that delay has little effect on the thyroid dose. This is to be expected since about 90 percent of the thyroid dose is due to the long lived isotopes I-131 and I-133. The ß and γ doses are principally due to relatively short-lived noble gases and therefore, show a significant reduction with delay in the Auxiliary Building.

15B.5 Sensitivity of Releases to the Assumed Fraction Entering the EGTS Suction Directly

No significant amount of primary containment leakage is expected to enter the EGTS suction at the top of the dome directly. However, the conservative assumption was made for the base case that 10 percent of the leakage to the annulus would enter the suction directly. Dose calculations for the exclusion area boundary were performed for EGTS direct leakage fraction from 0.0 up to 100 percent and the results are shown in Figure 15B-3. Even if the very conservative assumption is made that all primary containment leakage into the annulus enters the EGTS suction directly, the resulting two-hour thyroid dose is only 10 percent of the 10 CFR 100 guideline value, the beta dose is less than 12 percent of the 10 CFR 100 guideline value, and the gamma dose is less than 27 percent of the 10 CFR 100 guideline value.

Figure 15B-4 gives similar information for the 30-day doses at the LPZ distance.

The case analyzed in which none of the primary containment leakage enters the EGTS suction directly is the complete mixing model. In this model, the secondary containment acts similar to a large hold-up tank which collects the primary containment leakage. All fission products escaping from the primary containment to the secondary containment are assumed to mix with the air in the secondary containment. Ninety percent of the primary containment leakage is assumed to go into the secondary containment while the remaining 10 percent goes to the Auxiliary Building. The Auxiliary Building release path is discussed in Subsection 15.5.3.

APPENDIX 15B

SENSITIVITY ANALYSIS OF LOCA DOSE CALCULATIONS

(HISTORICAL INFORMATION)

The initial pressure in the annulus is less than atmospheric. After blowdown, the annulus pressure will increase rapidly due to expansion of the containment vessel as a result of primary containment atmosphere temperature and pressure increases. The annulus pressure will continue to rise due to heating of the annulus atmosphere by conduction through the containment vessel. After a delay of 38 seconds, the Emergency Gas Treatment System (EGTS) will be operating at full flow to maintain the annulus pressure to below atmospheric pressure.

During the initial 30 second period following the LOCA, primary containment leakage is assumed to mix uniformly with the secondary containment air. No activity is released to the environment during this period.

After the initial 30 second period following the LOCA, the EGTS draws air and fission products at uniform concentration from the secondary containment volume, passes it through HEPA-charcoal filters and exhausts a portion to the atmosphere. The remainder is exhausted back into the secondary containment where it is assumed to mix uniformly with the secondary containment air; it is then available for reentry into the EGTS in a similar manner to the primary containment leakage. The EGTS exhaust and recirculation flow rates as a function of time are given in Table 15.5.3-3.

The case analyzed in which all of the primary containment leakage enters the EGTS directly is the no mixing model. During the initial 30 second period following the LOCA, the no mixing model is similar to that used for the complete mixing case, discussed above in that no activity is released to the environment during this period.

After the initial 30 second period following the LOCA, all of the primary containment leakage to the secondary containment is drawn immediately into the EGTS where it is filtered. A portion is then exhausted to the atmosphere (see Table 15.5.3-3) while the remainder is returned to the secondary containment where it is assumed to mix uniformly in that volume.

15B.6 Sensitivity of Releases to Annulus Holdup Effectiveness

The holdup time in the annulus is a function of both the exhaust rate and the active annulus volume. The geometry of the annulus volume, as well as the locations of the EGTS suctions and recirculation exhausts, should provide uniform and complete circulation over essentially all the annulus volume. To demonstrate the capabilities of the containment design, doses were calculated assuming that large regions of the annulus (50 percent or more of the annulus free volume) do not contribute to fission product holdup. The results of this analysis are shown in Figure 15B-5, and demonstrate that offsite doses are still within 10 CFR 100 guidelines even for the unrealistic assumption of large reductions in the active annulus volume.

15B.7 Dose Models

The dose model discussed in Appendix 15A and used in the analyses in this appendix is conservative in three principle areas as conventionally applied. First, the decay of fission products downwind is neglected; second, the actual transport time (time to reach the receptor)

is neglected; and third, the dose is based on a uniform cloud which may, in fact, be quite nonuniform. All three factors have only a small effect when wind speeds are greater than 1 meter per second, however, for wind speeds less than 1 meter per second the first considerations tend to result in the "two-hour" doses being over estimated, while the third consideration overestimates the long term doses.

Figure 15B-6 shows the relative effect of decay of the activity releases during downwind transport on the two hour LOCA doses given in case 1. Due to the importance of long lived isotopes, the thyroid doses are not significantly affected. However, the beta and gamma doses show a stronger decrease with increasing transport time since the short lived kryptons contribute significantly to the doses.

Figures 15B-7 and 15B-8 show the total effect of the wind speed on the doses given in case 1 for Pasquill G and Pasquill F meteorological conditions. The curves take into account the effect of changing wind speed on the atmospheric dilution factor and the activity reduction due to decay during transport to the receptor. Four curves are presented in each figure. One curve shows the relative dose as a function of wind speed taking into account only the variance in the x/Q. The other three curves show the combined effect of the wind speed on the relative doses taking into account decay during transport and a variance in the x/Q.

Figure 15B-9 shows the effect of the receptor exposure time on the relative dose. The intent of the figure is to show the relative dose a receptor at the exclusion area boundary would receive under very low wind speed conditions during the first two hours following the initiation of a postulated LOCA. If the wind speed were such that it would take 1-1/2 hours for the radioactive cloud to reach the exclusion area boundary, the receptor would only be exposed to the cloud for 1/2 hours during the initial two hours following a postulated LOCA. Therefore, in the initial 2 hours he would only be exposed to that portion of the radioactivity that was released from the plant during the first 1/2 hour.

The information in Figures 15B-6 through 15B-9 is used to construct Figures 15B-10 and 15B-11. Figures 15B-10 and 15B-11 show the relative dose at the minimum exclusion distance during the first two hours of the accident for various wind speeds. The curves include (1) the effect of decay during transport, (2) the dependence of the dispersion factor on wind speed, and (3) the transport time required to reach the exclusion area boundary. This analysis demonstrates that the dose models used in Appendix 15A for the two-hour thyroid dose are conservative by a factor of 1.11 for Class G stability conditions and 1.33 for Class F stability conditions.

The conclusion to be drawn on beta and gamma doses is complicated by the assumption of a semi-infinite cloud, which ignores doses before the arrival of the plume at the receptor location. A detailed calculation of doses due to travel of the nonhomogenous plume would be required to determine the level of conservatism of the semi-infinite cloud model and to determine the effect of wind speed on doses.

The dispersion factor used for the initial two-hour period following the LOCA corresponds to Pasquill Class F and a wind speed of 0.25 meters/ second. At this low wind speed considerable

APPENDIX 15B

SENSITIVITY ANALYSIS OF LOCA DOSE CALCULATIONS

(HISTORICAL INFORMATION)

meandering of the wind can be expected; thus increasing the dispersion at the receptor location, thereby reducing doses. Actual measurements of dispersion factors at other sites have shown that the equation used in this analysis for the dispersion factor is quite conservative for low wind speeds.*

15B.8 Conclusions

Three conclusions can be drawn from the analyses in this appendix.

1. The effectiveness of the double containment concept utilizing the Shield Building augmented by treatment of the Auxiliary Building exhaust is relatively independent of a wide range of conservative assumptions which might be postulated. The major factor in the effectiveness of the secondary containment is its inherent capability to collect the containment leakage for filtration of the radioactive iodine prior to release to the environment. This effect is greatly enhanced by the recirculation feature of the air handling systems, which forces repeated filtration passes for the major fraction of the primary containment leakage before release to the environment.

2. The offsite doses for the hypothetical LOCA with the TID-14844 activity release will be less than those presented for the Regulatory Guide 1.4 (1973) (TID-14844 activity release) evaluation presented in Subsection 15.5.3 and considerably below the guideline values of 10 CFR 100.

3. The containment concept used in the Sequoyah design is highly effective in minimizing the release of radioactivity to the environment as a result of a loss-of-coolant.

---

*Atmospheric Diffusion Experiments with SF_6 Tracer Gas at Three Mile Island Nuclear Station Under Low Wind Speed Inversion Conditions, Pickard, Lowe, and Associates, Inc., The Research Corporation of New England General Public Utilities Service Corporation, January 1972.

TABLE 15B-1

PARAMETRIC STUDY OF LOCA

(HISTORICAL INFORMATION)

Case	Ice Condenser Iodine Removal Credit	Containment Leakage Directly To EGTS Suction(%)	Auxiliary Building Delay Time (Hr)	Thyroid Dose (Rem) SB	Thyroid Dose (Rem) LPZ	Beta Dose (Rem) SB	Beta Dose (Rem) LPZ	GammaDose (Rem) SB	GammaDose (Rem) LPZ
1	yes	10	0.0	2.32×10^{1}	5.69	1.89	7.81×10^{-1}	4.26	7.33×10^{-1}
2	yes	10	0.3	2.30×10^{1}	5.65	1.68	7.55×10^{-1}	3.57	6.51×10^{-1}
3	yes	10	1.0	2.26×10^{1}	5.58	1.43	7.08×10^{-1}	2.87	5.56×10^{-1}
4	no	10	0.0	8.75×10^{1}	2.41×10^{1}	1.93	7.88×10^{-1}	4.42	7.59×10^{-1}
5	no	10	0.3	8.64×10^{1}	2.40×10^{1}	1.75	7.46×10^{-1}	3.78	6.76×10^{-1}
6	no	10	1.0	8.47×10^{1}	2.36×10^{1}	1.46	7.14×10^{-1}	2.98	5.79×10^{-1}
7	yes	100	0.0	2.88×10^{1}	6.51	2.82	8.92×10^{-1}	6.69	1.03
8	yes	0	0.0	2.23×10^{1}	5.61	1.77	7.61×10^{-1}	3.94	6.94×10^{-1}
9	yes	100	0.3*	9.70×10^{1}	183×10^{1}	3.20	9.6×10^{-1}	6.49	1.01

*Auxiliary Building by-passed for first 10 min. following LOCA.

TABLE 15B-2

ICE CONDENSER IODINE REMOVAL EFFECTS

2 HOUR THYROID DOSES (REM)

(HISTORICAL INFORMATION)

WITH REMOVAL CREDIT		WITHOUT REMOVAL CREDIT		
Case	Total Tyroid Dose	Case	Total Thyroid Dose	Dose Reduction Factor
1	23.2	4	87.5	3.77
2	23.0	5	86.4	3.76
3	22.6	6	84.7	3.75
Case	Annulus Release Tyroid Dose	Case	Annulus Release Thyroid Dose	Dose Reduction Factor
1,2,3	3.05	4,5,6	9.53	3.12
Case	Aux. Build. Release Tyroid Dose	Case	Aux. Building Release Thyroid Dose	Dose Reduction Factor
1	20.1	4	78.0	3.88
2	19.9	5	76.9	3.86
3	19.5	6	75.2	3.86

TABLE 15B-3

ICE CONDENSER IODINE REMOVAL EFFECTS

30 DAY THYROID DOSES (REM)

(HISTORICAL INFORMATION)

WITH REMOVAL CREDIT		WITHOUT REMOVAL CREDIT		
Case	Total Thyroid Dose	Case	Total Thyroid Dose	Dose Reduction Factor
1	5.69	4	24.1	4.24
2	5.65	5	24.0	4.25
3	5.58	6	23.6	4.23

Case	Annulus Release Thyroid Dose	Case	Annulus Release Thyroid Dose	Dose Reduction Factor
1,2,3	0.599	4,5,6	2.40	4.01

Case	Aux. Build. Release Thyroid Dose	Case	Aux. Building Release Thyroid Dose	Dose Reduction Factor
1	5.09	4	21.7	4.26
2	5.05	5	21.6	4.28
3	4.98	6	21.2	4.26

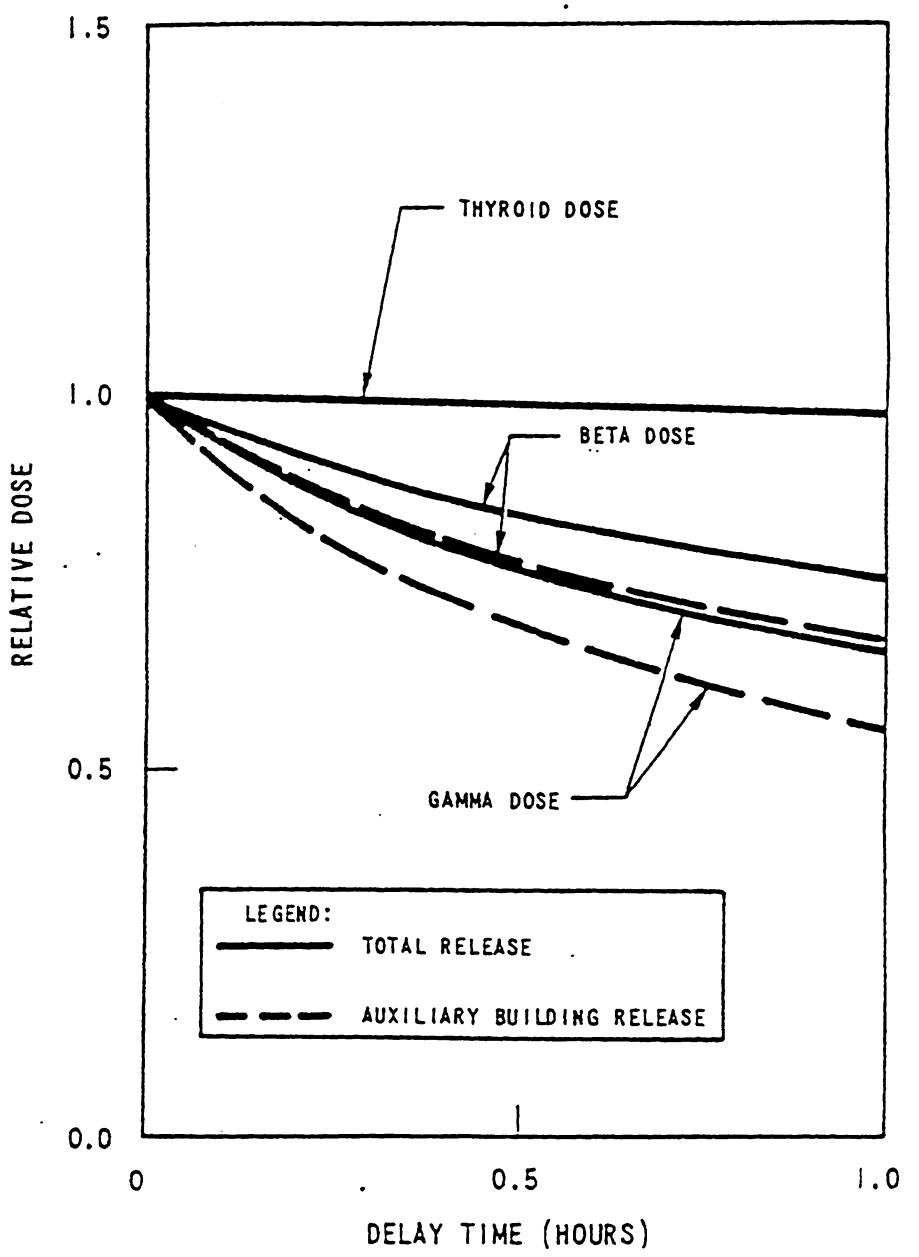

Figure 15B-1 Effect of Delay in the Auxiliary Building Release On 2 Hour Doses at the Exclusion Area Boundary

Revised by Amendment 10

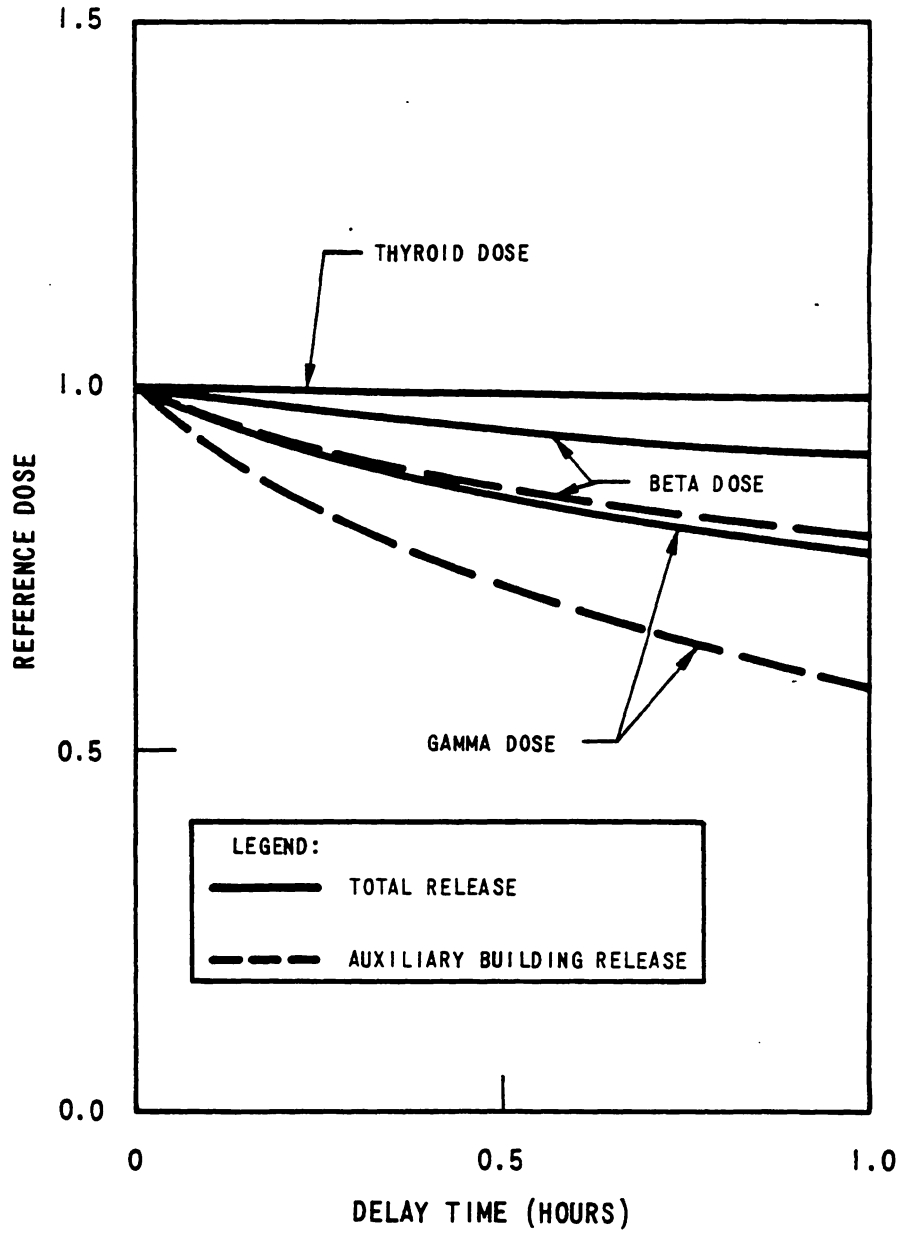

Figure 15B-2 Effect of Delay in the Auxiliary Building Release On 30 Day Doses at the Low Population Zone

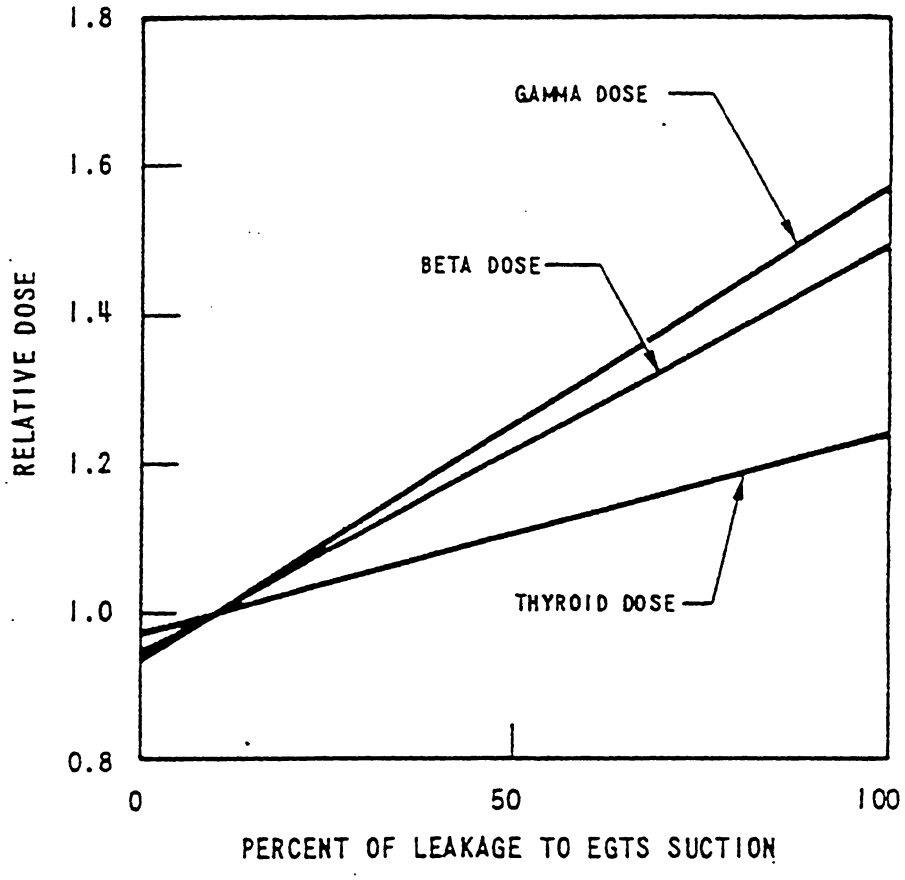

Figure 15B-3 Effect of Leakage Directly Into the EGTS Suction Header on 2 Hour Doses at the Exclusion Area Boundary

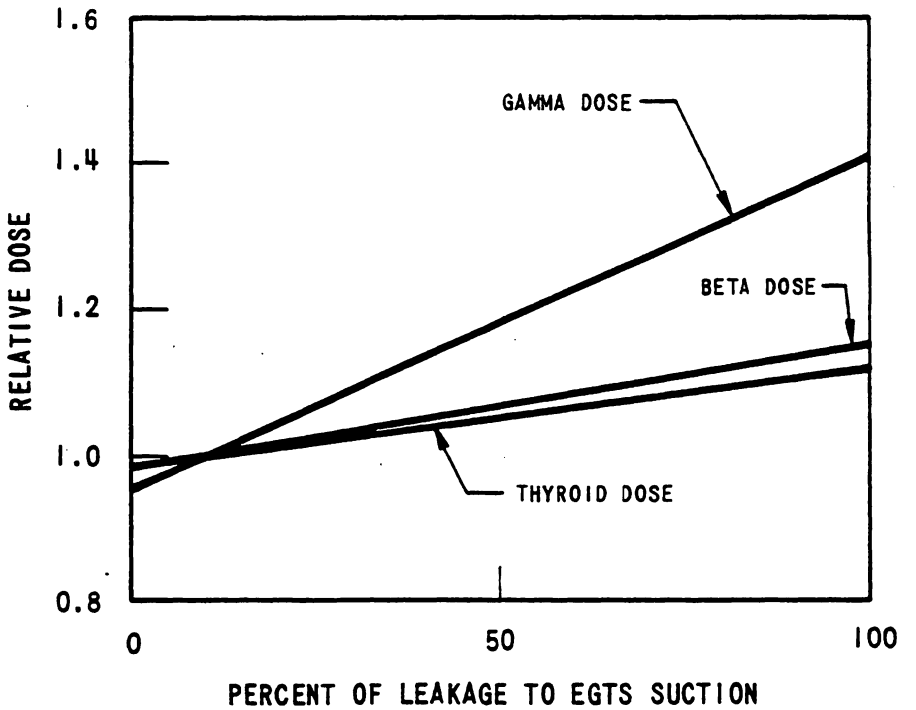

Figure 15B-4 Effect of Leakage Directly Into the EGTS Suction Header On 30 Day Doses at the Low Population Zone

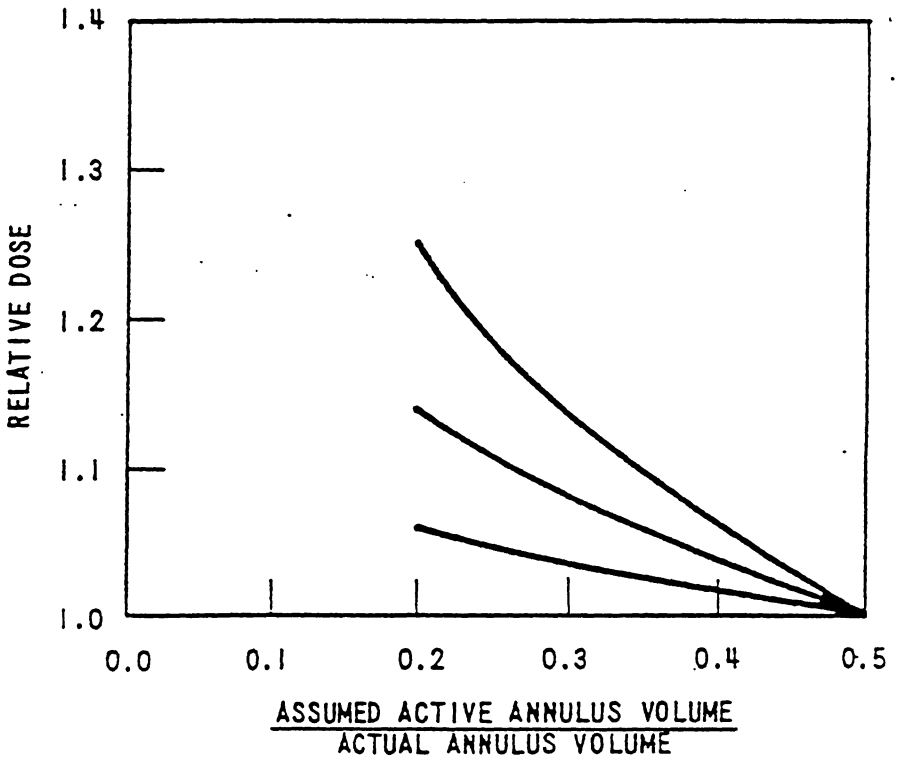

Figure 15B-5 Effect of Assumed Annulus Volume on 2 Hour Dose at Exclusion Area Boundary

Revised by Amendment 10

Best Available Historical Image

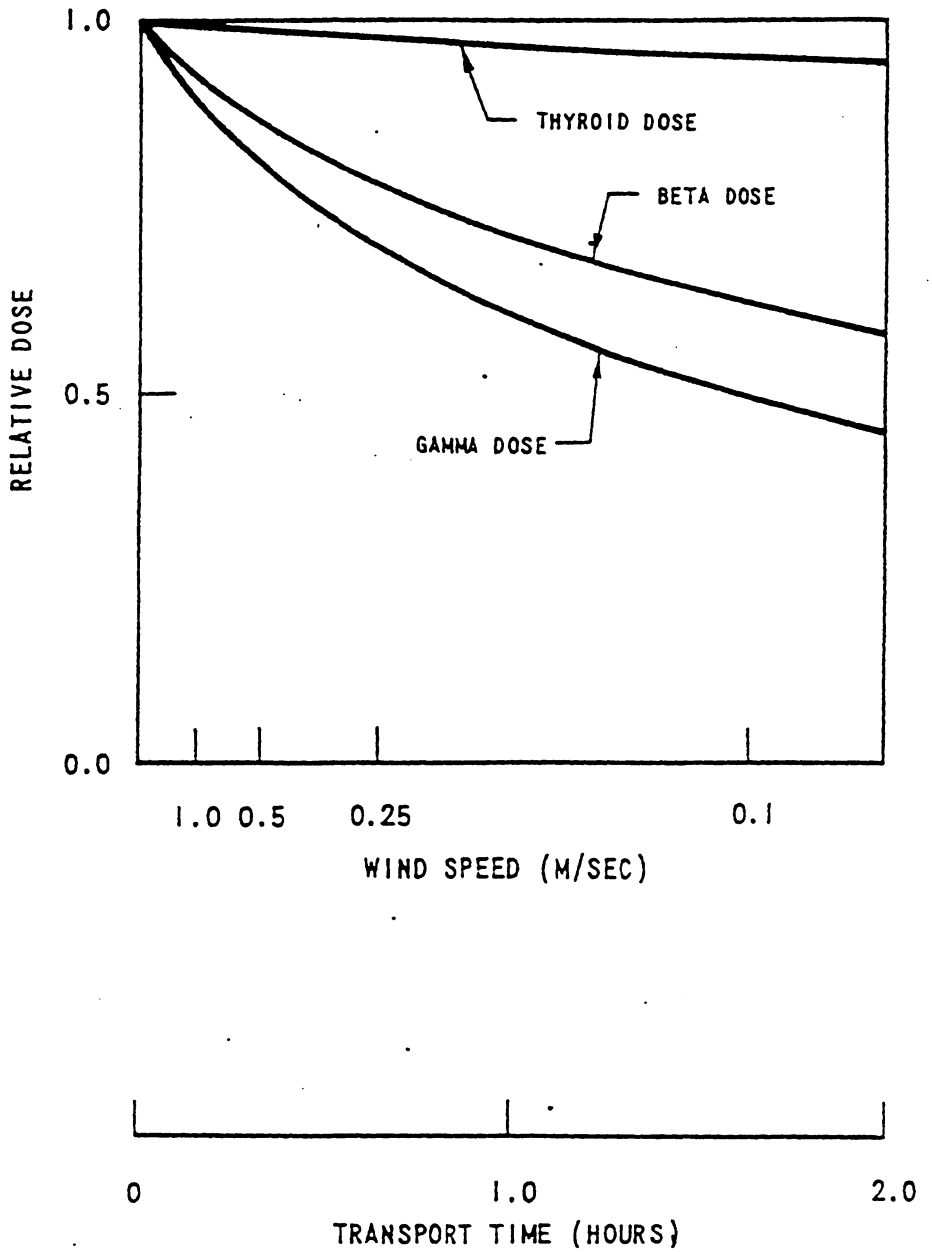

Figure 15B-6 Effect of Decay During Downwind Transport on 2 Hour Doses at Exclusion Area Boundary

Revised by Amendment 10

Best Available Historical Image

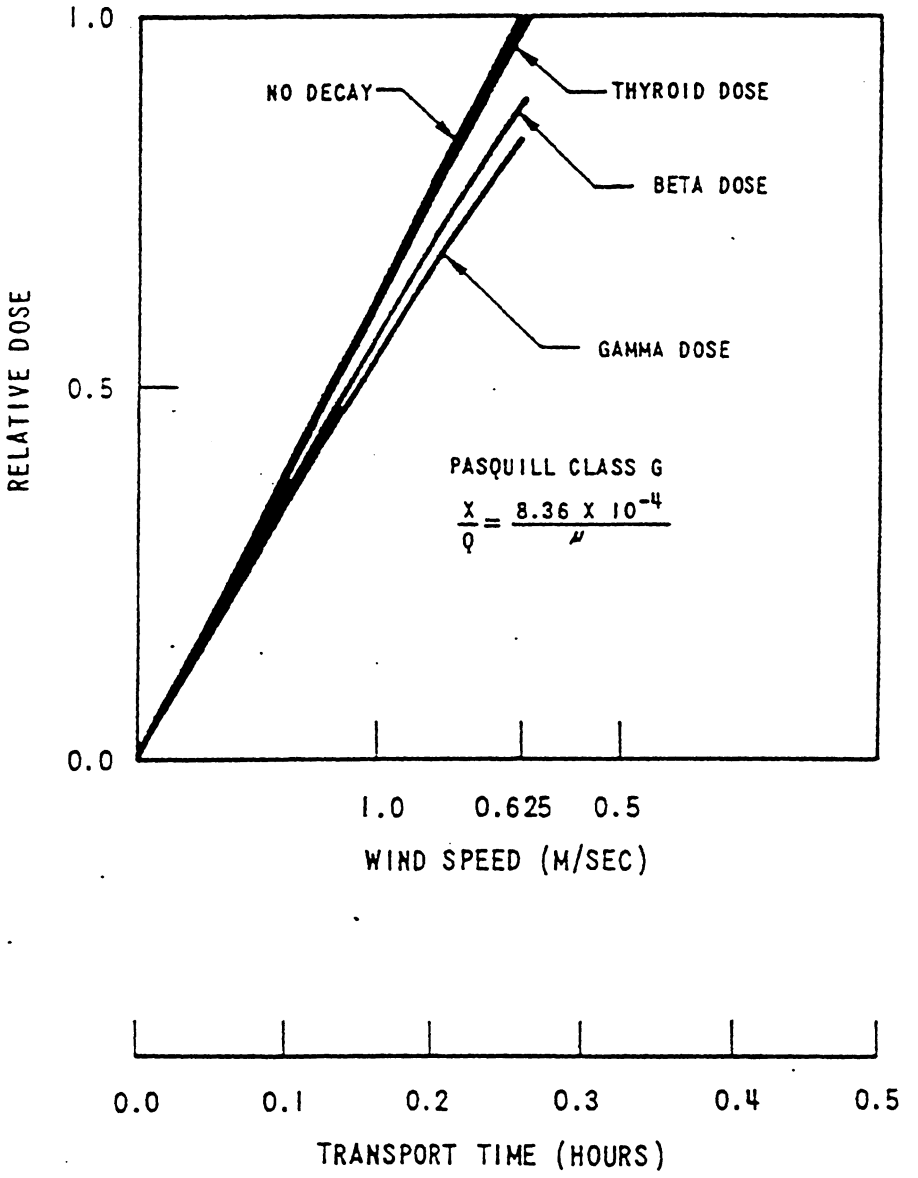

Figure 15B-7 Effect of Decay During Downwind Transport for Various Wind Speeds on 2 Hour Doses at Exclusion Area Boundary

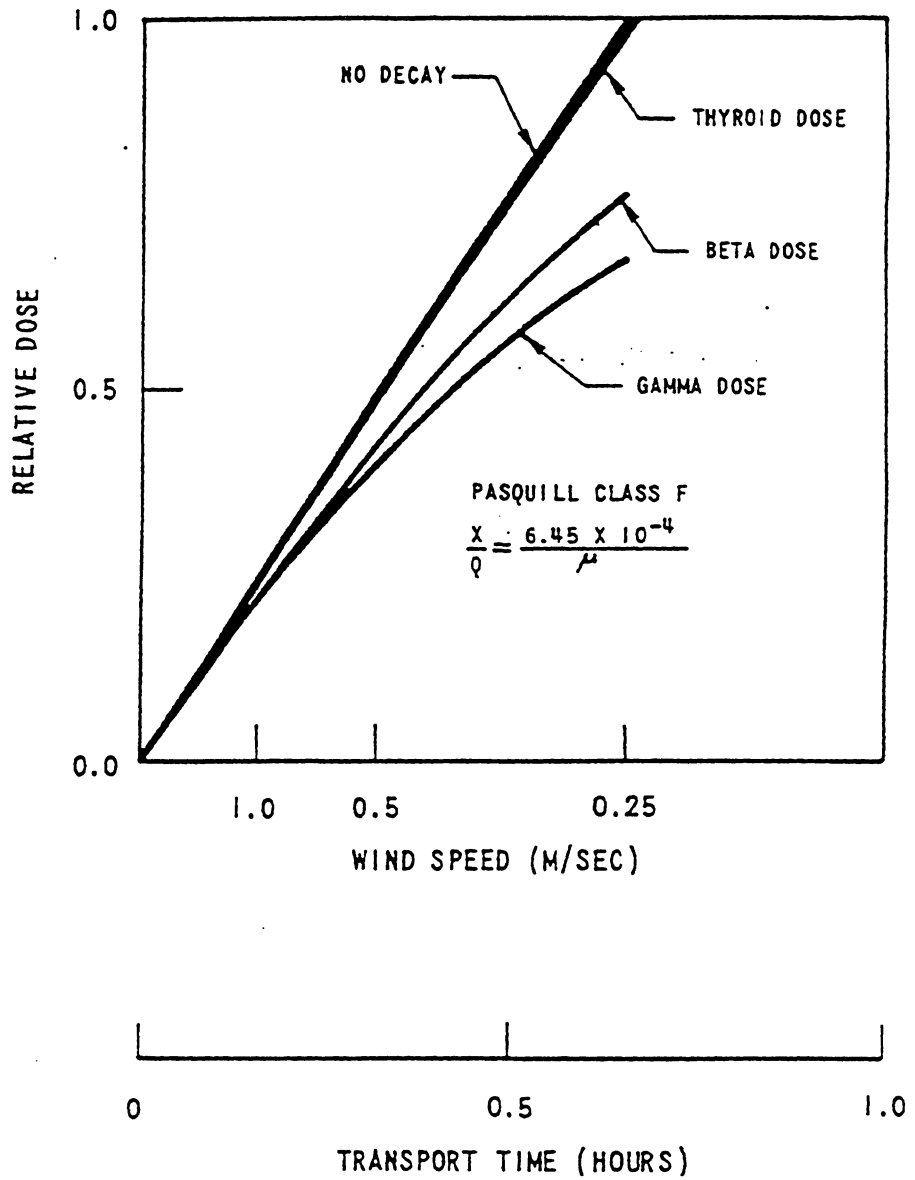

Figure 15B-8 Effect of Decay During Downwind Transport for Various Wind Speeds on 2 Hour Doses at Exclusion Area Boundary

Revised by Amendment 10

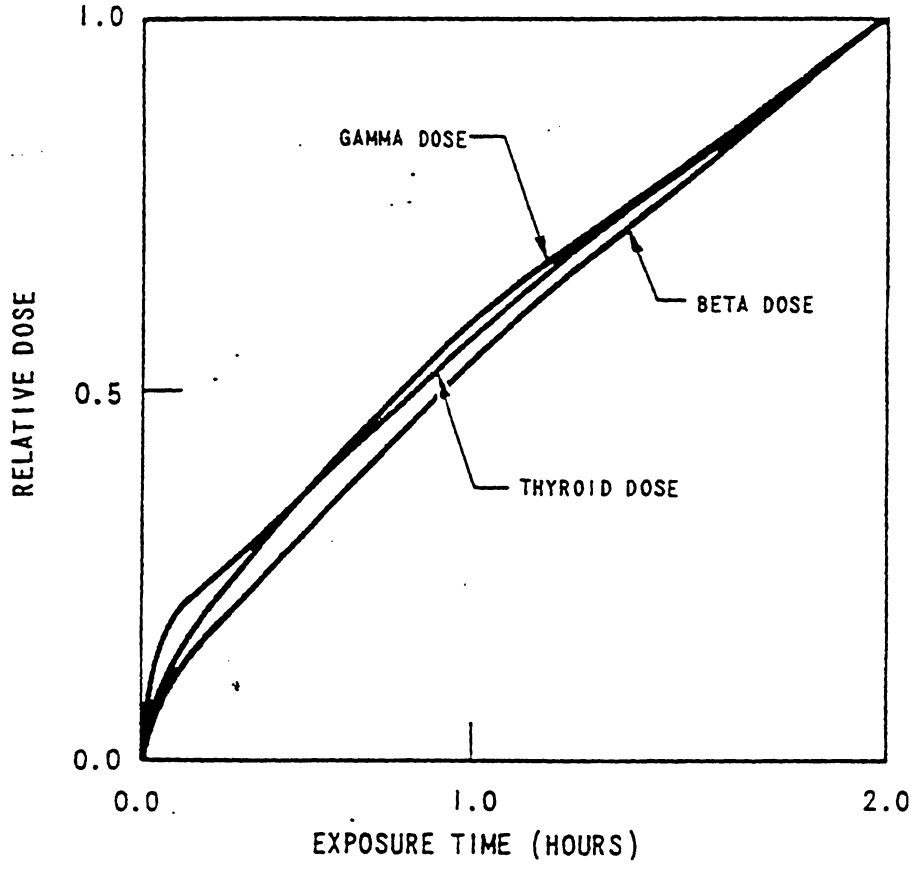

Figure 15B-9 Effect of Exposure Time on Exclusion Area Boundary Doses

Revised by Amendment 10

Best Available Historical Image

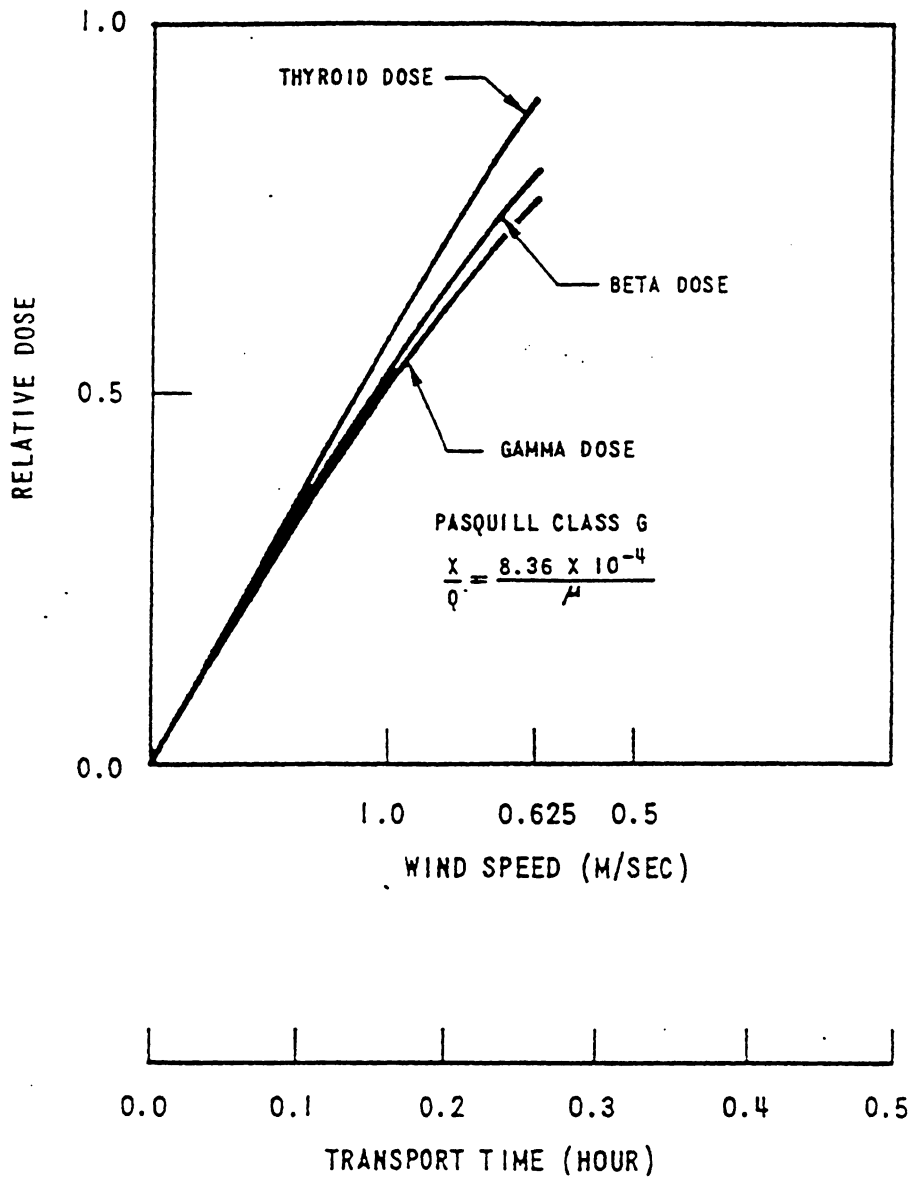

Figure 15B-10 Effect of Decay During Downwind Transport for Various Wind Speeds on Doses at the Exclusion Area Boundary in the First Two Hours of Exposure

Revised by Amendment 10

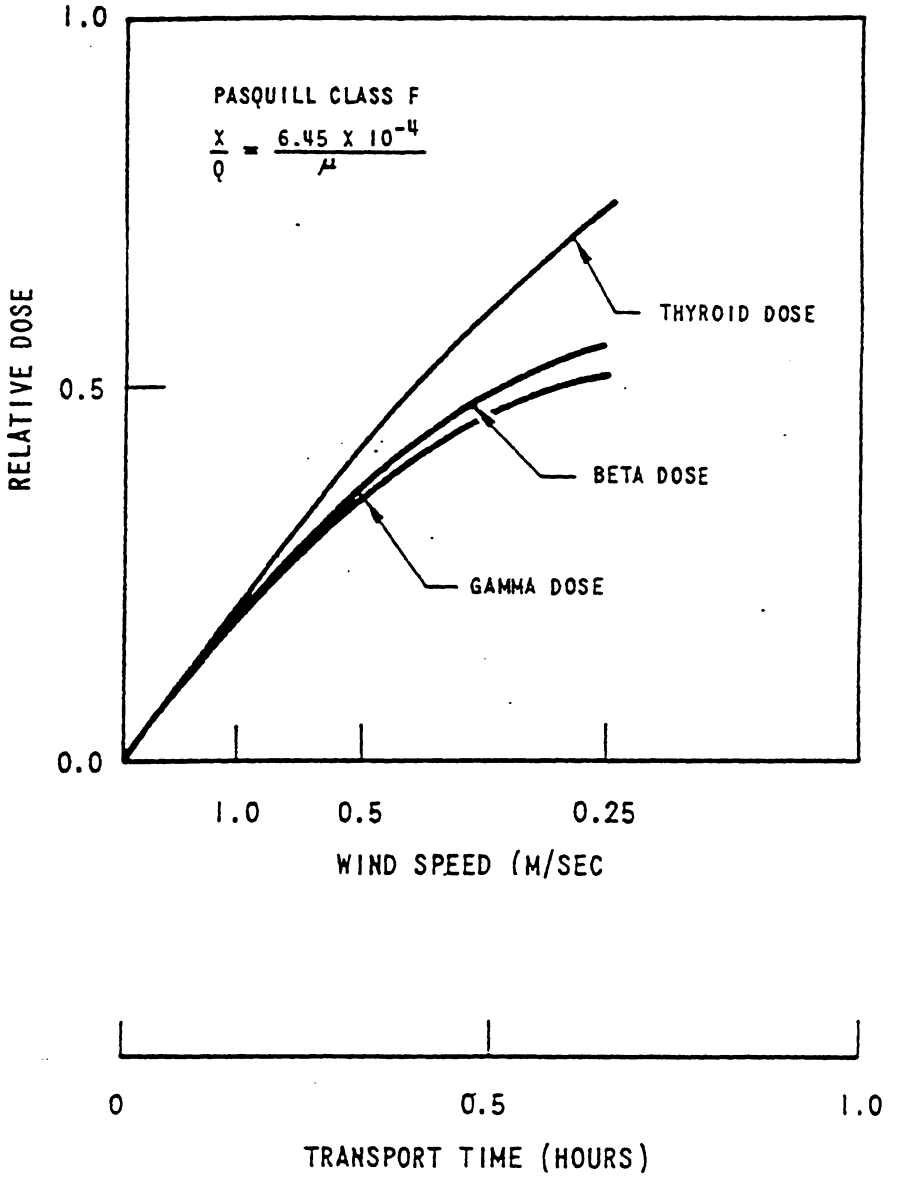

Figure 15B-11 Effect of Decay During Downwind Transport for Various Wind Speeds on Doses at the Exclusion Area Boundary in the First Two Hours of Exposure

Revised by Amendment 10

APPENDIX 15C

FUEL ROD MODEL DISCUSSION

(HISTORICAL INFORMATION)

LIST OF FIGURES

Number	Title
15C-1	Engineering Hoop Stress (KPSI)

APPENDIX 15C

FUEL ROD MODEL DISCUSSION

(HISTORICAL INFORMATION)

The U.S. Nuclear Regulatory Commission (NRC) issued a letter dated November 9, 1979 [1] to operators of light water reactors regarding fuel rod models used in Loss of Coolant Accident (LOCA) ECCS evaluation models. This letter describes a meeting called by the NRC on November 1, 1979 to present draft report NUREG-0630, "Cladding Swelling and Rupture Models for LOCA Analysis" [2]. At the meeting, representatives of NSSS vendors and fuel suppliers were asked to show how plants licensed using their LOCA/ECCS evaluation model continued to conform to 10 CFR Part 50.46 in view of the new fuel rod models presented in reference 2. Westinghouse representatives presented information on the fuel rod models used in analyses for plants licensed with the Westinghouse ECCS evaluation model and discussed the potential impact of fuel rod model changes on results of those analyses. That information was formally documented in letter NS-TMA-2147, dated November 2, 1979 [3], and formed the basis for the Westinghouse conclusion that the information presented in Reference 2 did not constitute a safety problem for Westinghouse plants and that all plants conformed with NRC regulations. The NRC requested [1] that operators of light water reactors provide, within sixty (60) days, information which would enable the staff to determine, in light of the fuel rod model concerns, whether or not further action was necessary.

This Appendix provides information on the LOCA analysis of Sequoyah Nuclear Plant unit 1 required to respond to such a request. Note, however, that a significant amount of discussion and information exchange between Westinghouse and the NRC has transpired since Reference 3 was prepared and the basis for demonstrating compliance with 10 CRF Part 50 has been modified. The following is an outline of the significant events that have occurred since November 2, 1979 and provides an update on this situation.

As a result of compiling information for Reference 3, Westinghouse recognized a potential discrepancy in the calculation of fuel rod burst for cases having clad heatup rates (prior to rupture) significantly lower than 25°F per second. This issue was reported to the NRC staff, by telephone, on November 9, 1979, and although independent of the NRC fuel rod model concern, the combined effect of this issue and the effect of the NRC fuel rod models had to be studied. Details of the work done on this issue were presented to the NRC on November 13, 1979 and documented in letter NS-TMA-2163 dated November 16, 1979 [4]. That work included development of a procedure to determine the clad heatup rate prior to burst and re-evaluation of operating Westinghouse plants with consideration of a modified Westinghouse fuel rod burst model. As part of this re-evaluation, the Westinghouse position on NUREG-0630 was reviewed and it was still concluded that the information presented in Reference 1 did not constitute a safety problem for plants licensed with the Westinghouse ECCS evaluation model.

On December 6, 1979, NRC and Westinghouse personnel discussed the information thus far presented. At the conclusion of that discussion, the NRC staff requested Westinghouse to provide further detail on the potential impact of modifications to each of the fuel rod models used in the LOCA analysis and to outline analytical model improvements in other parts of the

analysis and the potential benefit associated with those improvements. This additional information was compiled from various LOCA analysis results and documented in letter NS-TMA-2174 dated December 7, 1979 [5].

Another meeting was held in Bethesda on December 20, 1979 where NRC and Westinghouse personnel established:

1. The currently accepted procedure for assessing the potential impact on LOCA analysis results of using the fuel rod models presented in Reference 1 and

2. Acceptable benefits resulting from analytical model improvements that would justify continued plant operation for the interim until differences between the fuel rod models of concern are resolved.

The information following on pages 15C-3 through 15C-6 is expected to satisfy the NRC request for information on SQN which will enable the NRC to determine whether or not further action is necessary.

Part of the Westinghouse effort provided to assist in the resolution of these LOCA fuel rod model differences is documented in letter NS-TMA-2175, dated December 10, 1979 [6], which contains Westinghouse comments on draft NUREG-0630. As stated in that letter, Westinghouse believes the current Westinghouse models to be conservative and to be in compliance with Appendix K.

A. Evaluation of the potential impact of using fuel rod models presented in draft NUREG-0630 on the Loss of Coolant Accident (LOCA) analysis for Sequoyah.

This evaluation is based on the limiting break LOCA analysis identified as follows:

BREAK TYPE - DOUBLE ENDED COLD LEG GUILLOTINE

BREAK DISCHARGE COEFFICIENT - 0.6 IMP MIXING

WESTINGHOUSE ECCS EVALUATION MODEL VERSION - FEB '78

CORE PEAKING FACTOR - 2.25

HOT ROD MAXIMUM TEMPERATURE CALCULATED FOR THE BURST REGION OF THE CLAD - 1705°F = PCT_B

ELEVATION - 6.5 Feet

HOT ROD MAXIMUM TEMPERATURE CALCULATED FOR A NON-RUPTURED REGION OF THE CLAD - 2143°F = PCT_N

ELEVATION - 7.5 Feet

CLAD STRAIN DURING BLOWDOWN AT THIS ELEVATION	10	Percent
MAXIMUM CLAD STRAIN AT THIS ELEVATION	10	Percent

Maximum temperature for this non-burst node occurs when the core reflood rate is less than 1.0 inch per second and reflood heat transfer is based on the (STEAM COOLING) calculation.

AVERAGE HOT ASSEMBLY ROD BURST ELEVATION - 7.25 Feet

HOT ASSEMBLY BLOCKAGE CALCULATED - 34.9 Percent

1. BURST NODE

The maximum potential impact on the ruptured clad node is expressed in letter NS-TMA-2174 in terms of the change in the peaking factor limit (FQ) required to maintain a peak clad temperature (PCT) of 2200°F and in terms of a change in PCT at a constant FQ. Since the clad-water reaction rate increases significantly at temperatures above 2200°F, individual effects (such as WPCT due to changes in several fuel rod models) indicated here may not accurately apply over large ranges, but a simultaneous change in FQ which causes the PCT to remain in the neighborhood of 2200°F justifies use of this evaluation procedure.

From NS-TMA-2174:

For the Burst Node of the clad:

- 0.01 ΔFQ 150°F BURST NODE ΔPCT
- Use of the NRC burst model and the revised Westinghouse burst model could require an FQ reduction of 0.027
- The maximum estimated impact of using the NRC strain model is a required FQ reduction of 0.03.

Therefore, the maximum penalty for the Hot Rod burst node is:

$$\Delta PCT_1 = (0.027 + .03)\,(150°F/.01) = 855°F$$

Margin to the 2200°F limit is:

$$\Delta PCT_2 = 2200°F - 1705\ PCT_B = 495\ °F$$

The FQ reduction required to maintain the 2200°F clad temperature limit is:

$$\Delta FQ_B = (\Delta PCT_1 - \Delta PCT_2)\left(\frac{.01\ \Delta FQ}{150°F}\right)$$

$$= \left(\frac{855 - 495}{}\right)\left(\frac{.01}{150}\right)$$

$$= .024 \text{ (but not less than zero)}$$

2. NON-BURST NODE

The maximum temperature calculated for a non-burst section of clad typically occurs at an elevation above the core mid-plane during the core reflood phase of the LOCA transient. The potential impact on that maximum clad temperature of using the NRC fuel rod models can be estimated by examining two aspect of the analyses. The first aspect is the change in pellet-clad gap conductance resulting from a difference in clad strain at the non-burst maximum clad temperature node elevation. Note that clad strain all along the fuel rod stops after clad burst occurs and use of a different clad burst model can change the time at which burst is calculated.

The effect of the change in pellet-clad gap conductance in the non-burst node was determined by performing a sensitivity study using various rate dependent burst curves. The results of these studies are presented in Table I. It is seen that the most representative case, as defined by the relationship between the actual clad heatup rate and the heatup rate used in the burst mode, is the 8.4°F/sec ramp rate. The increase in calculated peak clad temperature, ΔPCTs, for this case was 19°F. It is also noted that hot rod burst occurs 6.9 seconds earlier and the blockage increases by 9.7% over the base case results.

The sensitivity study included the effect of blockage as well as the effect of the change in gap conductance on the peak clad temperature. The value of ΔPCT_3 includes an increased blockage penalty. Thus in the evaluation of the increase in PCT, ΔPCT_4, due to blockage, the 45% blockage value from the sensitivity rather than the 34.9% value from the limiting break LOCA analysis identified at the beginning of section A will be used in order to prevent a double accounting of the 9.7% blockage increase noted in the sensitivity study.

A comparison of the ramp dependent burst curves used in this study with the NUREG-0630 is shown in Figure 15C-1. It can be seen that the burst temperatures predicted by the Westinghouse rate dependent models predict higher burst temperatures than the ORNL correlations.

Detailed discussion of these differences are provided in the December 10 letter (NS-TMA-2175), including an explanation of the conservatism of the model and demonstration of compliance with Appendix K.

The second aspect of the analysis that can increase PCT is the flow blockage calculated. Since the greatest value of blockage indicated by the NRC blockage model is 75 percent, the maximum PCT increase can be estimated by assuming that the current level of blockage in the analysis (see above discussion) is raised to 75 percent and then applying an appropriate sensitivity formula shown in NS-TMA-2174.

Therefore,

$$\Delta PCT_4 = 1.25°F\ (50 - \text{PERCENT CURRENT BLOCKAGE})$$

$$+ 2.36°F\ (75\text{-}50)$$

$$= 1.25\ (50 - 45) + 2.36\ (75\text{-}50)$$

$$= 65.25°F$$

If PCT_N occurs when the core reflood rate is greater than 1.0 inch per second $\Delta PCT_4 = 0$. The total potential PCT increase for the non-burst node is then

$$\Delta PCT_5 = \Delta PCT_3 + \Delta PCT_4 = 19.0 + 65.25 = 84.25°F$$

Margin to the 2200°F limit is

$$\Delta PCT_6 = 2200°F - PCT_N = 2200 - 2143 = 57°F$$

The FQ reduction required to maintain this 2200°F clad temperature limit is (from NS-TMA-2174)

$$\Delta FQ_N = (\Delta PCT_5 - \Delta PCT_6)\left(\frac{.01\Delta FQ}{10°F\Delta PCT}\right) = (84.25 - 57)\left(\frac{.01}{10}\right) = .027$$

$\Delta FQ_N = .027$ but not less than zero.

The peaking factor reduction required to maintain the 2000°F clad temperature limit is therefore the greater of ΔFQ_B and ΔFQ_N.

B. The NRC has recently approved the removal of the 65°F uncertainty on hot rod fuel pellet temperature for ECCS analysis. The effect of removing this uncertainty on the calculated PCT has been determined based on previously established sensitivities performed to quantify this effect (WCAP-9180). From these, it is estimated that this reduction in applied model uncertainty would result in a decrease in calculated PCT of 15°F for UHI plants. Applying the same sensitivity used in calculating ΔFQ_N.

$$\Delta FQ_{CREDIT} = 15°F\left(\frac{.01\Delta FQ}{10°F\ \Delta PCT}\right) = .015$$

C. The peaking factor limit adjustment required to justify plant operation for this interim period is determined as the appropriate WFQ credit identified in Section B above, minus the WFQ[PENALTY] calculated in Section A above (but not greater than zero).

FQ ADJUSTMENT = .015 - .027 = .012

D. The revised peaking factor is then FQ FSAR minus the FQ adjustment, or:

FQ = 2.25 - .012 = 2.237

References

1. U.S. Nuclear Regulatory Commission letter, D. G. Eisenhut to Utilities with Operating Light Water Reactors, November 9, 1979.

2. NUREG-0630, (Draft) Powers, D. A., Meyer, R. O., November 8, 1979, Cladding Swelling and Rupture Models for LOCA Analysis.

3. Letter from T. M. Anderson of Westinghouse Electric Corporation to D. G. Eisenhut of the Nuclear Regulatory Commission, Letter Number NS-TMA-2147, November 2, 1979.

4. Corporation to D. G. Eisenhut of the Nuclear Regulatory Commission, Letter Number NS-TMA-2163, November 16, 1979.

5. Letter from T. M. Anderson of Westinghouse Electric Corporation to D. G. Eisenhut of the Nuclear Regulatory Commission, Letter Number NS-TMA-2174, December 7, 1979.

6. Corporation to D. Denise of the Nuclear Regulatory Commission, Letter Number NS-TMA-2175, December 10, 1979.

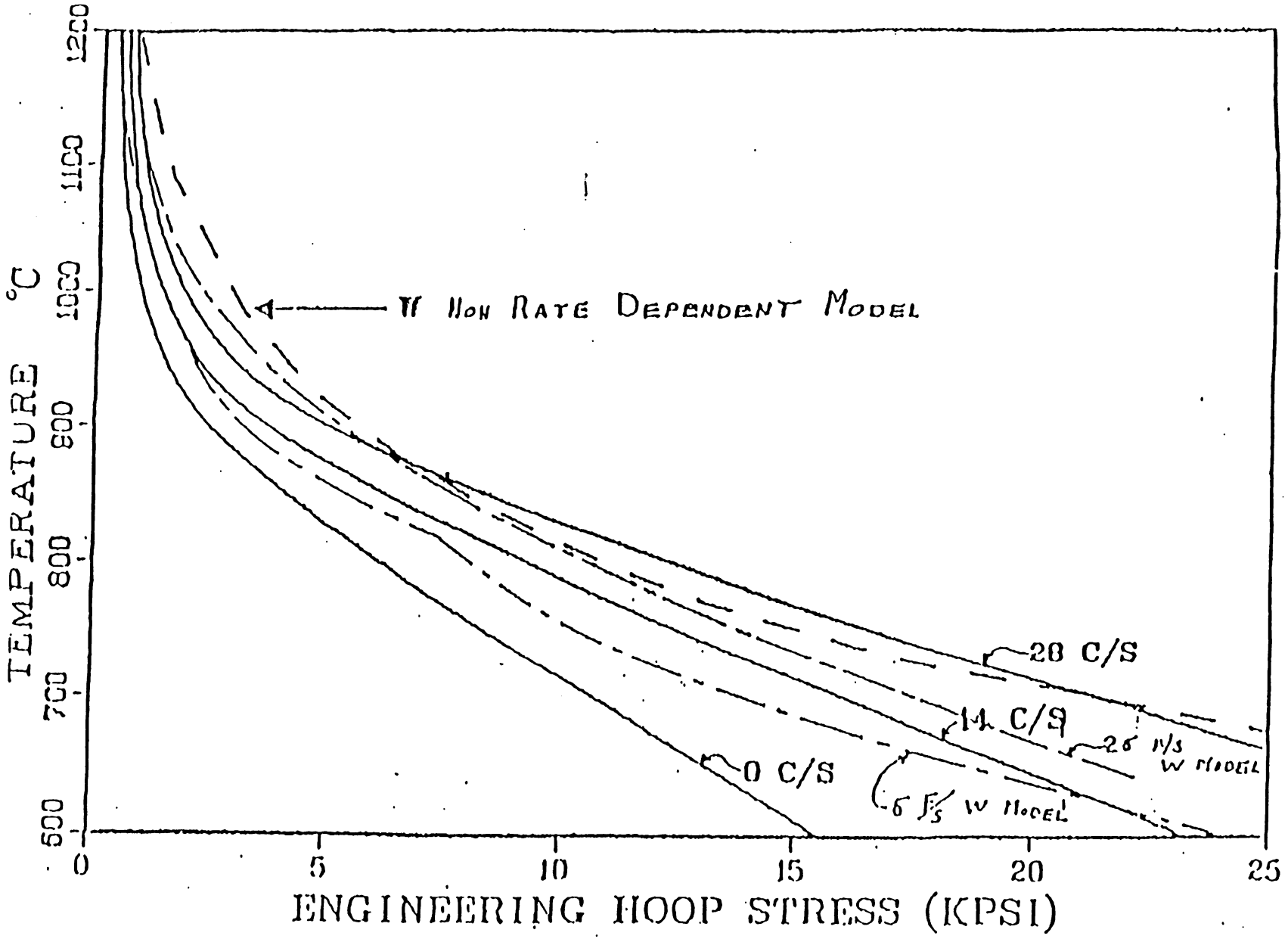

FIGURE 15C-1 H large-break model and ORNL correlation of rupture temperature as a function of engineering hoop stress and ramp rate. (Historical Information)

APPENDIX 15D
PRIMARY COOLANT ACTIVITY MODEL USED TO EVALUATE THE RADIOLOGICAL CONSEQUENCES OF ACCIDENTS

TABLE OF CONTENTS

Section	Title	Page
15D.1	Introduction	15D-2
15D.2	Primary Coolant Equilibrium Activity	15D-2
15D.3	Iodine Spike Modeling	15D-2
15D.4	Secondary Coolant Activity	15D-3

LIST OF TABLES

Number	Title
15D-1	Primary Coolant Activity (micro-curies/gram)
15D-2	Iodine Appearance Rates at Equilibrium Primary Coolant Concentration of 0.35 (micro-curies/gram) D.E. I-131 (Ci/min)
15D-3	Secondary Coolant Activity (micro-curies/gram)

APPENDIX 15D

PRIMARY COOLANT ACTIVITY MODEL USED TO EVALUATE THE RADIOLOGICAL CONSEQUENCES OF ACCIDENTS

15D.1 Introduction

This appendix describes the model used to define the primary and secondary coolant fission product concentrations that are used in the design basis accident radiological consequences analyses. The accidents incorporating this modeling are:

1. Loss of A.C. Power
2. Steam Line Break
3. Steam Generator Tube Rupture

15D.2 Primary Coolant Equilibrium Activity

The Technical Specification limit for noble gas specific activity is assumed to be1612.6 μCi/gm DOSE EQUIVALENT XE-133. The Technical Specification definition for DOSE EQUIVALENT XE-133 states: DOSE EQUIVALENT XE-133 shall be that concentration of Xe-133 (microcuries per gram) that alone would produce the same acute dose to the whole body as the combined activities of noble gas nuclides Kr-85m, Kr-85, Kr-87, Kr-88, Xe-131m, Xe-133m, Xe-133, Xe-135m, Xe-135, and Xe-138 actually present. Table 15.D-1 lists the primary coolant noble gas concentrations when operating at the Technical Specification limit.

For the primary coolant iodines, the Technical Specification limit is 0.35 μCi/gm of Dose Equivalent I-131 for equilibrium operation. Table 15D-1 lists the iodine concentrations associated with operation at the Technical Specification limit. The individual isotope concentrations were determined based on the isotopic distribution that is expected during normal operation and using the thyroid dose conversion factors listed in Appendix 15A.

15D.3 Iodine Spike Modeling

Iodine spikes (periods of time during which the iodine appearance rate in the primary coolant is elevated) are part of the accident analysis modeling for the steam line break, the steam generator tube rupture, and the loss of A.C. power events. These accidents are analyzed considering both the situation of a pre-existing iodine spike and the situation in which the event initiates an iodine spike (accident-initiated spike).

For these accident analyses the pre-existing iodine spike is assumed to be the maximum iodine concentration allowed by Technical Specifications (21 µCi/gm Dose Equivalent I-131). This is the limit applied for a transient duration of <48 hours. The pre-existing spike coolant concentrations are a factor of 60 greater than the concentrations reported in Table 15D-1 for equilibrium operation at 0.35 µCi/gm Dose Equivalent I-131.

For analysis modeling the accident-initiated spike it is assumed that the initial iodine concentration in the primary coolant is at the Technical Specification value of 0.35 µCi/gm Dose Equivalent I-131 and that the equilibrium iodine appearance rates are those which support this coolant concentration. As a result of the accident, an iodine spike is initiated which increases the iodine appearance rate by a factor of 500 resulting in an increasing primary coolant iodine concentration. The iodine appearance rates associated with maintaining the primary coolant concentration of 0.35 µCi/gm are provided in Table 15D-2.

15D.4 Secondary Coolant Activity

There is no noble gas activity retained in the secondary coolant.

The iodine activity concentration of the secondary coolant at the time an accident occurs is assumed to be at the Technical Specification limit of 0.1 µCi/gm Dose Equivalent I-131 (see Table 15D-3). Iodine spiking phenomena are assumed.

TABLE 15D-1

PRIMARY COOLANT ACTIVITY (μCi/gm)

Noble gas (D.E. Xe-133)	
Kr-85m	6.74E0
Kr-85	1.05E1
Kr-87	6.35E0
Kr-88	1.18E1
Xe-131m	2.58E1
Xe-133m	2.83E0
Xe-133	9.98E1
Xe-135m	5.48E0
Xe-135	3.56E1
Xe-138	5.09E0
Iodines (Equilibrium concentration of 0.35 μCi/gm D.E. I-131, no spike)	
I-131	2.03E-1
I-132	9.57E-1
I-133	6.34E-1
I-134	1.55E0
I-135	1.18E0

SQN-18

TABLE 15D-2

IODINE APPEARANCE RATES AT EQUILIBRIUM PRIMARY COOLANT CONCENTRATION OF 0.35 (μCi/gm) D.E. I-131 (Ci/min)

I-131	1.127E-1
I-132	1.646E0
I-133	4.248E-1
I-134	5.583E0
I-135	1.121E0

TABLE 15D-3

SECONDARY COOLANT ACTIVITY (μCi/gm)

Noble gas	none
Iodine (0.1 μCi/gm D.E. I-131)	
I-131	0.058
I-132	0.274
I-133	0.181
I-134	0.443
I-135	0.338

TABLE OF CONTENTS

Section	Title	Page
17.0	QUALITY ASSURANCE	
17.1A	QUALITY ASSURANCE DURING DESIGN AND CONSTRUCTION	17.1-1
17.1B	WESTINGHOUSE QUALITY ASSURANCE PROGRAM	17.1-1
17.1B.1	References	17.1-1
17.2	QUALITY ASSURANCE PROGRAM FOR STATION OPERATION	17.2-1
17.2.1	Compliance	17.2-1
17.2.2	Quality (Q)-List	17.2-1
17.2.3	References	17.2-1

17.0 QUALITY ASSURANCE

17.1A QUALITY ASSURANCE DURING DESIGN AND CONSTRUCTION

The original QA program for design and construction was described in Appendix B of the Preliminary Safety Analysis Report. The program has been revised and upgraded several times to reflect both organizational changes and changes in requirements. The program was included as Chapter 17.1A of the Final Safety Analysis Report which was subsequently revised and is now included in the latest revision to the TVA Nuclear Quality Assurance Plan, TVA-NQA-PLN89-A. Design and construction activities after licensing shall be in accordance with the latest approved revision of TVA-NQA-PLN89-A.

17.1B WESTINGHOUSE QUALITY ASSURANCE PROGRAM

The original Quality Assurance Program implemented by Westinghouse for the Sequoyah Nuclear Plant was described in Appendix A of the Preliminary Safety Analysis Report. Over the course of performing the design and initial procurement activities for the Sequoyah Nuclear Plant, the Westinghouse Quality Assurance Program was upgraded several times to reflect changes in requirements and industry standards. These changes were described and included in the various revisions to Chapter 17.1B of the Final Safety Analysis Report. The present quality assurance program is included in the Westinghouse Electric Company, Quality Management System (QMS) document.

17.1B.1 References

1. Westinghouse Electric Company, Quality Management Systems (QMS).

17.2 QUALITY ASSURANCE PROGRAM FOR STATION OPERATION

17.2.1 Compliance

The information presented in the Tennessee Valley Authority Nuclear Quality Assurance Plan, TVA-NQA-PLN89-A, Reference [1], presents an accurate and complete description of the quality assurance program for operation of Sequoyah Nuclear Plant.

17.2.2 Quality (Q) - List

TVA has prepared a Q-List for the Sequoyah Nuclear Plant (SQN). Items designated on this list are handled in accordance with the requirements of the nuclear quality assurance program as set forth in Reference [1]. At SQN, the Site Engineering organization is responsible for the establishment and maintenance of the Q-List. The Q-List will be issued and controlled similar to design output. Site procedures control the issue, revision process, and maintenance of the Q-List.

The requirements of inclusion of items on the Q-List is that they be safety related or a TVA identified Quality Related feature.

1. For the purposes of the Q-List, "safety-related items" have been defined as those that meet the following criteria:

   a. Those items that are necessary to ensure:

      (1) The integrity of the reactor coolant pressure boundary.

      (2) The capability to shutdown the reactor and maintain it in a safe condition.

      (3) The capability to prevent or mitigate the consequences of an incident which could result in potential offsite exposure comparable to those specified in 10 CFR 100.

2. TVA identified quality-related features are defined by Reference [1].

To ensure uniform application of these criteria, TVA has developed a set of general notes for the Q-List which is part of the site administrative procedure for Q-List use and control.

17.2.3 References

1. Nuclear Quality Assurance Plan,TVA-NQA-PLN89-A