Wolf Creek
Nuclear Operating Corporation

Michael T. Boyce
Vice President Engineering

April 6, 2022
ET 22-0003

U. S. Nuclear Regulatory Commission
ATTN: Document Control Desk
Washington, DC 20555-0001

Subject: Docket No. 50-482: 10 CFR 50.55a Request I4R-09 for the Fourth Inservice Inspection Program Interval, Relief from Examination of Reactor Vessel Flange Threads

Commissioners and Staff:

Pursuant to 10 CFR 50.55a(z)(1), Wolf Creek Nuclear Operating Corporation (WCNOC) hereby requests Nuclear Regulatory Commission (NRC) approval of 10 CFR 50.55a Request Number I4R-09 for the fourth ten-year interval of WCNOC's Inservice Inspection (ISI) Program. Specifically, WCNOC is requesting an alternative to the requirement to perform ultrasonic examinations of threads in reactor pressure vessel closure flange connections on the basis that the proposed alternative provides an acceptable level of quality and safety. The Attachment provides the basis for the request.

WCNOC requests approval by March 1, 2023, to allow for planning upcoming refueling outages.

This letter contains no commitments. If you have any questions concerning this matter, please contact me at (620) 364-8831 x8687, or Ron Benham at (620) 364-4204.

Sincerely,

Michael T. Boyce

MTB/rlt

Attachment: 10 CFR 50.55a Request I4R-09

cc: S. S. Lee (NRC), w/a
S. A. Morris, (NRC), w/a
G. Werner (NRC), w/a
Senior Resident Inspector (NRC), w/a

Wolf Creek Nuclear Operating Corporation

10 CFR 50.55a Request I4R-09

Request for Relief from Examination of Reactor Vessel Flange Threads in Accordance with 10 CFR 50.55a(z)(1)

10 CFR 50.55a Request Number I4R-09

Relief Requested
In Accordance with 10 CFR 50.55a(z)(1)

Proposed Alternative to ASME Section XI for Elimination of Examination of Reactor Vessel Threads in Flange

1. ASME Code Component(s) Affected

Code Class:	Class 1
Examination Category:	B-G-1, "Pressure Retaining Bolting Greater than 2 in. (50mm) in Diameter"
Code Item Number:	B6.40
Description:	Reactor Vessel Threads in Flange

2. Applicable Code Edition and Addenda

American Society of Mechanical Engineers (ASME) Boiler and Pressure Vessel Code, Section XI, "Rules for Inservice Inspection and Testing of Components of Light-Water Cooled Plants," 2007 Edition with the 2008 Addenda. Wolf Creek Nuclear Operating Corporation (WCNOC) fourth 10-Year Inservice (ISI) Interval began on September 3, 2015, and is scheduled to end on September 2, 2025.

3. Applicable Code Requirement

The Reactor Pressure Vessel (RPV) threads in flange, Examination Category B-G-1, Item Number B6.40 are examined using a volumetric examination technique with 100% of the flange threaded stud holes examined every ISI interval. The examination area is the one-inch area around each RPV stud hold, as shown on Figure IWB-2500-12.

4. Reason for the Request

In accordance with 10 CFR 50.55a(z)(1), Wolf Creek Nuclear Operating Corporation (WCNOC) is requesting a proposed alternative from the requirement to perform inservice ultrasonic examinations of Examination Category B-G-1, Item Number B6.40, Threads in Flange. The proposed 10 CFR 50.55a(z)(1) alternative is to eliminate this inspection requirement. The basis for elimination of these examinations is Electric Power Research Institute (EPRI) Technical Report (TR) No. 3002010354, entitled, "Reactor Pressure Vessel (RPV) Threads in Flange Examination Requirements" (Reference 1). Approval of this proposed alternative eliminates performance of unnecessary volumetric inspections of the RPV flange threads at WCNOC.

Licensees in the U.S. and internationally have worked with EPRI and in 2017 produced the above referenced final report (TR No. 3002010354). The final report includes a survey of inspection results from 168 nuclear units that responded (including domestic and international units), a review of operating experience related to RPV flange/bolting, and a flaw tolerance

evaluation. The conclusion from this evaluation was that these ASME Code Section XI examinations had not been identifying any service-induced degradation and the associated impact on worker exposure, personnel safety, critical path time, and additional time at reduced Reactor Coolant System water inventory was not commensurate with the benefit of performance of this examination.

Potential Degradation Mechanisms

An evaluation of potential degradation mechanisms that could impact flange/threads reliability is described in the 2017 EPRI report. Potential types of degradation evaluated included pitting, intergranular attack, corrosion fatigue, stress corrosion cracking, crevice corrosion, velocity phenomena, dealloying corrosion, general corrosion, stress relaxation, creep, mechanical wear, and mechanical/thermal fatigue. Other than the potential for mechanical/thermal fatigue, there are no active degradation mechanisms identified for the threads in flange component.

The final EPRI report also notes a general conclusion from ASME's “Risk-Based Inspection: Development of Guidelines,” (Reference 2) that when a component item has no active degradation mechanism present and a preservice inspection has confirmed that the inspection volume is in good condition (i.e., contains no flaws/indications), then subsequent in-service inspections do not provide additional value going forward. As explained in the final EPRI report, the RPV flange ligaments have not only received the required pre-service examinations, but more than 10,000 ISIs have been carried out with no relevant findings.

To address the potential for mechanical/thermal fatigue, the EPRI report documents a stress analysis and flaw tolerance evaluation of the flange thread area to assess mechanical/thermal fatigue potential. The evaluation consists of two parts. In the first part, a stress analysis is performed considering all applicable loads on the threads in flange component. In the second part, the stresses at the critical locations of the component are used in a fracture mechanics evaluation to determine the allowable flaw size for the component as well as how much time it will take for a postulated initial flaw to grow to the allowable flaw size using guidelines in the ASME Code, Section XI, IWB-3600, “Analytical Evaluation of Flaws.” The Pressurized Water Reactor (PWR) design was selected because of its higher design pressure and temperature.

Stress Analysis

As discussed in the EPRI report (Reference 1), a stress analysis was performed to determine the stresses at critical regions of the threads in flange component as input to a flaw tolerance evaluation. Sixteen nuclear plants (ten PWRs and six boiling water reactors (BWRs)) were considered in the stress analysis of the EPRI report. The evaluation was performed using a geometric configuration that is representative of the sixteen units identified in Tables 2-1 and 2-2 of the EPRI report.

The details of the RPV parameters for WCNOC as compared to the bounding values used in the evaluation, are shown in Table 1. As shown in Table 1 below, the inside diameter of the RPV in the analysis is smaller than that at WCNOC, the diameter of the stud used in the analysis is also smaller than that at WCNOC. The number of studs installed is the same. The larger RPV inside diameter results in higher pressure and thermal stresses but the larger stud diameter results in lower preload stresses per bolt. The flange thickness is greater than the bounding value, but it is relatively less important since it is not an input into the preload stress calculation. Therefore, the stresses from the analyzed configuration would be conservative in application to WCNOC. The dimensions of the analyzed geometry are shown in Figure 1 at

the end of this Attachment.

Table 1: Comparison of WCNOC Plant Parameters to Bounding Values Used in Analysis

Plant	No. of Studs Installed	Stud Nominal Diameter (inches)	RPV Inside Diameter at Stud Hole (inches)	Flange Thickness at Stud Hole (inches)	Design Pressure (psia)
WCNOC	54	7.0	184.875	17.812	2500
Range for 16 Units Considered	54-76	6.0-7.0	155-250	12.9-16	1250-2500
Bounding Values Used in Analysis	54	6.0	173	16	2500

The analytical model is shown in Figure 2 and 3 at the end of this Attachment. The loads considered in the analysis consisted of:

- A design pressure of 2500 pounds per square inch, absolute (psia) at a temperature of 600° Fahrenheit (F) was applied to the internal surfaces exposed to internal pressure.
- Bolt/stud preload – The preload on the bounding geometry is calculated as:

$$P_{preload} = \frac{C * P * ID^2}{S * D^2} = \frac{1.1 * 2500 * 173^2}{54 * 6^2} = 42{,}338 \text{ psi}$$

Where:

$P_{preload}$ = Preload pressure to be applied on modeled bolt
P = Internal pressure (psi)
ID = Largest inside diameter of RPV
C = Bolt-up contingencies (+10%)
S = Least number of studs
D = Smallest stud diameter (inch)

- Thermal stresses - The only significant transient affecting the bolting flange is heat-up/cooldown. This transient typically consists of a steady 100°F/hour ramp up to the operating temperature with a corresponding pressure ramp up to the operating pressure.

The ANSYS finite element analysis program was used to determine the stresses in the threads in flange component for the three loads described above.

Flaw Tolerance Evaluation

A flaw tolerance evaluation was performed using the results of the stress analysis described in the EPRI report (Reference 1) to determine how long it would take an initial postulated flaw to reach the ASME Code, Section XI allowable flaw size. A linear elastic fracture mechanics (LEFM) evaluation consistent with ASME Code, Section XI, IWB-3600

was performed.
Stress intensity factors (Ks) at four flaw depths of 360° inside-surface-connected, partial-through-wall circumferential flaws are calculated using finite element analysis techniques with the model described above. The maximum stress intensity factor (K) values around the bolt hole circumference for each flaw depth (a) are extracted and used to perform the crack growth calculations. The circumferential flaw is modeled to start between the 10th and 11th flange threads from the top end of the flange where the largest tensile axial stress occurs. The modeled flaw depth-to-wall thickness ratios (a/t) are 0.02, 0.29, 0.55 and 0.77 as measured in any direction from the stud hole. This creates an ellipsoidal flaw shape around the circumference of the flange, as shown in Figure 4 of this Attachment, for the flaw model with a/t = 0.77 crack model. The crack tip mesh for the other flaw depths follows the same pattern. When preload is not being applied, the stud, stud threads, and flange threads are not modeled. The model is otherwise unchanged between load cases.

The maximum K results are summarized in Table 2 for four crack depths. Because the crack tip varies in depth around the circumference, the maximum K from all locations at each crack size is conservatively used for the K vs. -a profile.

Table 2: Maximum K vs. a/t

Load	K at Crack Depth (ksi√in)			
	0.02 a/t	**0.29 a/t**	**0.55 a/t**	**0.77 a/t**
Preload	11.2	17.4	15.5	13.9
Preload + Heatup + Pressure	13.0	19.8	16.1	16.3

Because a postulated flaw is considered in this evaluation, a conservative LEFM approach consistent with Appendix G of EPRI Report (Reference 1) is used to determine the allowable flaw size. Appendix G of Reference 1 applies a structural factor of 2 to the membrane stress and a structural factor of 1 to the thermal stress. In this evaluation, the conservative factor of 2 will be applied to all stresses. The acceptance criterion based on allowable stress intensity factor is:

$K_I < K_{Ic}/2$ for normal operating condition

Where:
K_I = applied stress intensity factor (ksi√in.)
K_{Ic} = lower bound fracture toughness at operating temperature

The fracture toughness K_{Ic} is obtained from Figure G-2210-1 of Appendix G of ASME Code Section XI for a material operating in the upper shelf region (normal operating temperature). The flaw tolerance evaluation in the EPRI report (Reference 1) used the value of K_{Ic} = 220 ksi√in, which is the maximum value allowed for the applicable conditions. Therefore, K_{Ic} /2 results in an allowable K value of 110 ksi√in. As can be seen from Table 2 above, the allowable K is not exceeded for all crack depths up to the deepest analyzed flaw of a/t = 0.77. Accordingly, the allowable flaw depth of the 360° circumferential flaw is at least 77% of the thickness of the flange during normal operation.

However, because most of the applied K in Table 2 above is due to preload that occurs at

a lower temperature, the allowable K at preload temperature must also be checked. The fracture toughness K_{Ic} during preload is based on the reference temperature for nil ductility transition (RT_{ndt}) of the vessel flange materials and the assumed flange temperature at the time of preload. Appendix B of EPRI report (Reference 1) contains information from 28 nuclear plants, including flange temperature during bolt preload (T) and RT_{ndt} ($T – RT_{ndt}$ = 0°F), and the equations in Figure G-2210-1 of Appendix G of ASME Code Section XI, the corresponding value of K_{Ic} is 53.9 ksi√in. For the postulated flaw considered in the analysis, using the structural factor of 2 brings the allowable K to 27 ksi√in. Therefore, the allowable flaw depth of the 360° circumferential flaw is at least 77% of the thickness of the flange, even during bolt-up.

The RT_{ndt} of the vessel flange region at WCNOC is a maximum of +40°F. The flange temperature during bolt preload is assumed as the procedural minimum of 60°F. Therefore, flange $T – RT_{ndt}$ for WCNOC is a minimum of 20°F, which is bounded by the value of 0°F used in EPRI report (Reference 1)

For the crack growth evaluation, an initial postulated flaw size of 0.2 inch (5.08 mm) is chosen consistent with the ASME Code, Section XI IWB-3500, “Acceptance Standards,” for flaws. The deepest flaw analyzed is a/t = 0.77 because of the inherent limits of the model. Two load cases are considered for fatigue crack growth: heatup/cooldown and bolt preload. The heat-up/cooldown load case includes the stresses due to thermal and internal pressure loads and is conservatively assumed to occur 50 times per year. The bolt preload is assumed to be present and constant during the load cycling of the heat- up/cooldown load case. The bolt preload load case is conservatively assumed to occur five times per year, and these cycles do not include thermal or internal pressure. The resulting crack growth was determined to be negligible (0.005 inches over 80 years of operation) due to the small delta K and the relatively low number of cycles associated with the transients evaluated. Because the crack growth is insignificant, the allowable flaw size will not be reached, and the integrity of the component is not challenged for at least 80 years (original 40-year design life plus additional 40 years of plant life extension).

The stress analysis and flaw tolerance evaluation presented above show that the threads in flange component at WCNOC is very flaw tolerant and can operate for 80 years without exceeding ASME Code, Section XI safety margins. This clearly demonstrates that the threads in flange component examinations can be eliminated without affecting the safety of the RPV.

Operating Experience Review Summary

As discussed above, the results of the survey discussed in the EPRI report (Reference 1) confirmed that the RPV threads in flange examinations are adversely impacting outage activities, such as worker exposure, personnel safety, and critical path time while not identifying any service induced degradation. Specifically, for the U.S. fleet, a total of 94 nuclear units have responded and none of these units have identified any type of degradation. As shown in Table 3 below (reproduced from Table 3-1 of Reference 1), not a single unit has reported detecting a reportable indication in more than 10,000 examination conducted. The 94 units identified in Table 3 represent data from 61 PWRs and 33 BWRs. No service-induced degradation was identified in 6,869 PWR and 3,793 BWR examinations. The response data includes information from all of the plant designs in operation in the U.S., including BWR -2, -3, -4, -5 and -6 designs as well as PWR 2-loop, 3-loop, and 4-loop designs (i.e., Babcock & Wilcox, Combustion Engineering, and

Westinghouse).

Table 3: Summary of Survey Results – U.S. Fleet

Plant Type	Number of Units	Number of Examinations	Number of Reportable Indications
BWR	33	3,793	0
PWR	61	6,869	0
Total	94	10,662	0

Related RPV Assessments

In addition to the examination history and flaw tolerance discussed above, the EPRI report (Reference 1) discusses studies conducted in response to the issuance of the Anticipated Transient Without Scram (ATWS) Rule (Reference 3) by the NRC. This rule was issued to require design changes to reduce expected ATWS frequency and consequences. Many studies have been conducted to understand the ATWS phenomena and key contributors to successful response to an ATWS event. Reference 1 indicates that the reactor coolant system (RCS) and its individual components were reviewed to determine weak links. As an example, even though significant structural margin was identified in NRC SECY-83-293, "Amendments to 10CFR50 Related to Anticipated Transients Without Scram (ATWS) Events," dated July 19, 1983," for PWRs, the ASME Service Level C pressure of 3200 psig was assumed to be an unacceptable plant condition. While a higher ASME service level might be defensible for major RCS components, other portions of the RCS could deform to the point of inoperability. Additionally, there was the concern that steam generator tubes might fail before other RCS components with a resultant bypass of containment. The key take-away for these studies is that the RPV flange ligament was not identified as a "weak link" and other RCS components were significantly more limiting. Thus, there is substantial structural margin associated with the RPV flange.

In summary, EPRI Report (Reference 1) concludes that the RPV threads in flange examination can be eliminated without increasing plant risk or posing any safety concerns for the RPV.

5. Proposed Alternative and Basis for Use

Pursuant to 10 CFR 50.55a, "Codes and standards," paragraph (z)(1), "Alternatives to codes and standards requirements," WCNOC is requesting an alternative to the requirement under Section XI of the ASME Code, Examination Category B-G-1, Item Number B6.40, "Threads in Flange," to perform in-service ultrasonic examinations of the RPV flange threads every interval. The proposed alternative is to eliminate this inspection requirement.

The EPRI report TR No. 3002010354, "Reactor Pressure Vessel (RPV) Threads in Flange Examination Requirements," provides the technical basis for the elimination of the RPV threads in flange examination. This report was developed because evidence

had suggested that there have been no occurrences of service-induced degradation and there are negative impacts on worker dose, personnel safety, radwaste, refueling outage critical path for these examinations, and additional time at reduced RCS water inventory. Approval of this proposed alternative will eliminate performance of unnecessary volumetric inspections of the RPV flange threads at the WCNOC.

6. Duration of Proposed Alternative

This alternative is requested for remainder of the fourth 10-year ISI interval, which is scheduled to end on September 2, 2025.

7. Precedent

The NRC has authorized use of an alternate to examination of the RPV threads in flange for several utilities whose plants include both BWRs and PWRs based on the current EPRI Report 3002010354 and an earlier version of that report, EPRI report 3002007626 (Reference 4). It should be noted that the WCNOC is a PWR 4 loop design like DC Cook for which alternate examinations have been authorized by the NRC.

8. References

1. Electric Power Research Institute (EPRI) Technical Report (TR) No. 3002010354, “Reactor Pressure Vessel (RPV) Threads in Flange Examination Requirements,” Final Report, dated December 2017

2. American Society of Mechanical Engineers, “Risk-Based Inspection: Development of Guidelines, “Volume 2-Part 1 and Volume 2-Part 2, Light Water Reactor (LWR) Nuclear Power Plant Components. CRTD-Vols. 20-2 and 20-4 ASME Research Task Force on Risk-Based Inspection Guidelines, Washington, D.C., 1992 and 1998

3. 10 CFR 50.62, Requirements for reduction of risk from anticipated transients without scram (ATWS) events for light-water-cooled nuclear power plants. Federal Register, Vol. 49, No. 124, June 26, 1984

4. EPRI TR No. 3002007626, “Nondestructive Evaluation: Reactor Pressure Vessel Threads in Flange Examination Requirements,” dated March 2016 (ADAMS Accession No. ML16221A068)

5. SECY-83-293, “Amendments to 10CFR50 Related to Anticipated Transients Without Scram (ATWS) Events”, U.S. Nuclear Regulatory Commission, Washington, D.C., July 19, 1983

6. Letter from N. L. Salgado (NRC) to T. A. Conboy (Northern States Power Company – Minnesota), Monticello Nuclear Generating Plant – Proposed Alternative Request for Examination of Reactor Pressure Vessel Threads in Flange (EPID L-2020-LLR-0013), dated December 21, 2020, (ADAMS Accession No. ML20031E432)

7. Letter from M. T. Markley (NRC) to D. G. Stoddard (Dominion), “North Anna Power Station, Units 1 and 2 – Proposed Inservice Inspection Alternatives N1-14-NDE-009 and N2-14-NDE-004 (CAC Nos. MF9298 and MF9299; EPID L-2016-LLR-0018),” dated December 6, 2017 (ADAMS Accession No. ML17132A663)

8. Letter from D. J. Wrona (NRC) to B. C. Hanson (Exelon Generating Company, LLC), “Braidwood Station, Units 1 and 2; Byron Station, Unit Nos. 1 and 2; Calvert Cliffs Nuclear Power Plant, Units 1 and 2; Clinton Power Station, Unit No. 1; Dresden Nuclear Power Station, Units 2 and 3; Limerick Generation Station, Units 1 and 2; Nine Mile Point Nuclear Station, Units 1 and 2; Peach Bottom Atomic Power Station, Units 2 and 3; Quad Cities Nuclear Power Station, Units 1 and 2; R. E. Ginna Nuclear Power Plant; and Three Mile Island Nuclear Station, Unit 1 – Proposed Alternative to Eliminate Examination of Threads in Reactor Pressure Vessel Flange (CAC Nos. MF8712-MF8729 and MF9548), dated June 26, 2017 (ADAMS Accession No. ML17170A013)

9. Letter from D. J. Wrona (NRC) to J. P. Gebbie (Indiana Michigan Power Company), Donald C. Cook Nuclear Plant, Units 1 and 2 – Proposed Alternative Request for Elimination of the Reactor Pressure Vessel Threads in Flange Examination EPID L-2018-LLR-0084),” dated December 11, 2018,” (ADAMS Accession No. ML 18337A394)

Appendix to 10 CFR 50.55a Request I4R-09

Figures 1-4

Figure 1: Modeled Dimensions

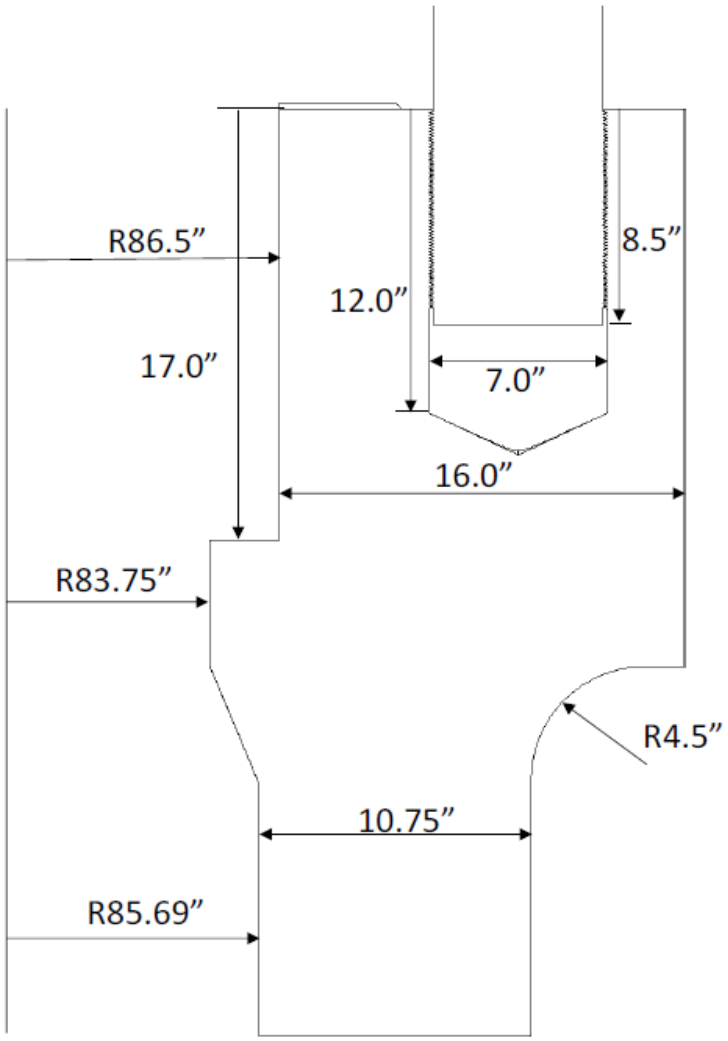

1 in. = 25.4 mm

Figure 2: Finite Element Model Showing Bolt and Flange Connection

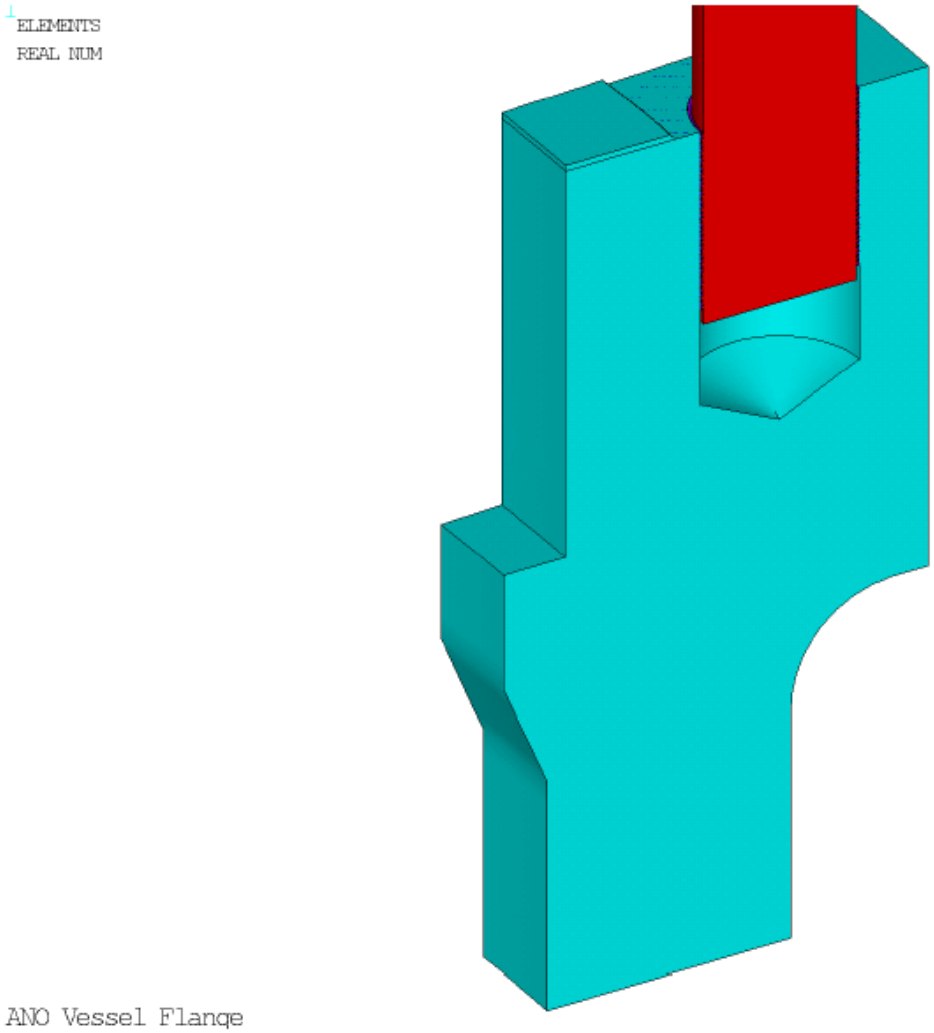

Figure 3: Finite Element Model Mesh with Detail at Thread Location

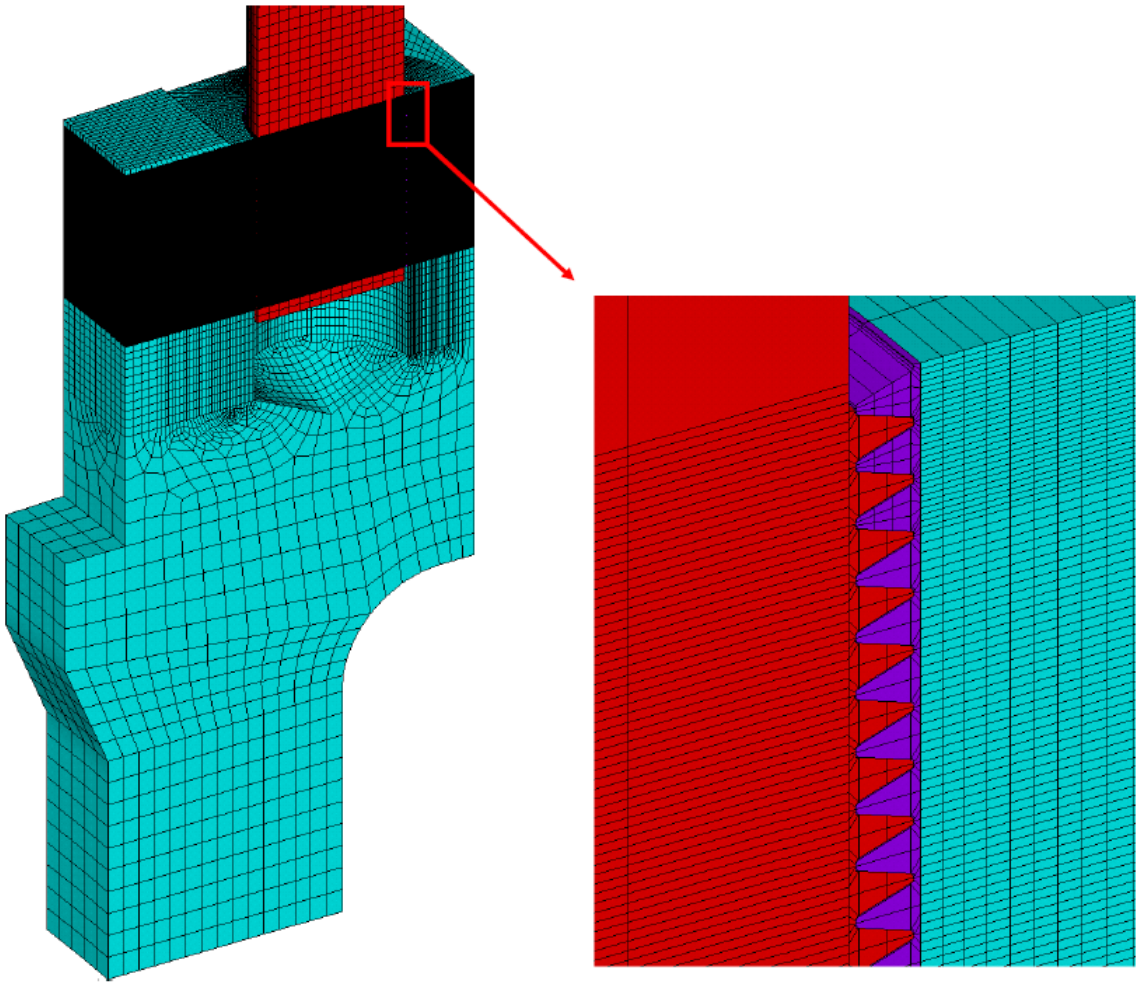

Figure 4: Cross Section of Circumferential Flaw with Crack Tip Element Inserted After 10th Thread from Top of Flange