CHAPTER 2 PROPOSED ACTION

2.1 PROPOSED ACTION

The Proposed Federal Action is issuance of a Construction Permit (CP) and subsequent Operating License (OL) for a non-power reactor facility (Hermes) to test and demonstrate the key technologies, design features, and safety functions of the Kairos Power Fluoride Salt-Cooled High Temperature Reactor (KP-FHR) technology. The facility would also provide data that may be used for the validation of safety analysis tools and computational methodologies used for the designing and licensing future KP-FHR reactors.

The applicant for this CP and the OL and owner of the facility is Kairos Power LLC, (Kairos Power). Information about Kairos Power is provided with the Preliminary Safety Analysis Report (PSAR). As the owner and licensee, Kairos Power has the necessary authority and control related to the construction and operation of the facility once the CP and the OL are approved.

Kairos Power is requesting NRC review and approval of the CP application to support construction of safety-related structures, systems, and components anticipated to begin as early as mid-2023. Kairos Power is a recipient of a U.S. Department of Energy (DOE) Advanced Reactor Demonstration Program (ARDP) award for Risk Reduction funding for the KP-FHR technology with initial operations proposed to begin by mid-2026. To support this objective, the earliest start date for construction is expected to be April 2023 and the earliest projected date for completion of construction is mid-2025. The latest projected date for completion of construction is anticipated to be December 2026. The facility is expected to have a 10-year operational license. Therefore, decommissioning activities would be expected to be initiated after the operational phase ends and is anticipated to begin in 2036.

The construction phase of this project is estimated to require an estimated average of 212 onsite workers (425 at peak times) and a monthly average of 213 truck deliveries and four offsite shipments of construction debris. Table 2.1-1 shows estimates for materials that would be consumed. Additionally, approximately 31,800 gallons of diesel fuel (as a bounding assumption, fuel is assumed to be diesel) is assumed to be consumed on an average monthly basis. Table 2.1-2 shows the different types of construction equipment that would be used during the construction phase. These construction activities are estimated to affect an estimated 138 acres of land, of which an estimated 30 acres would be permanently disturbed for operation of the facility.

~~A low-pressure, molten salt coolant, i.e., Li2BeF4 (Flibe) and the intermediate coolant (nitrate salt) would be shipped to the site prior to startup. Flibe is estimated to be delivered in 20 shipments of 1 ton each. Nitrate salt is estimated to be delivered in 28 shipments of approximately 7 tons each.~~

During operations, an estimated average of 38 workers per weekday (68 full-time positions) are required for staffing. An estimated monthly average of 15 truck deliveries and four offsite waste shipments. An additional 20 shipments of Flibe (approximately one ton each) is estimated to be delivered to the facility before the end of the first two years of operation~~ and 28 shipments per year of nitrate salt (7 tons each) for the duration of operations~~. Hazardous materials that would be stored onsite in small quantities include new Flibe ~~and nitrate salt~~ lubricating oil for rotating equipment and cleaning materials and consumables used for cleaning and maintenance. A bounding value of approximately 21,555 gallons of diesel fuel for the standby diesel generator would be contained in an onsite storage tank.

Once the facility reaches the end of its licensed life, the Operating License would be amended by the NRC and decommissioning activities would be commenced. Radioactive equipment and materials will be disposed according to local and federal laws and regulations. It is estimated that post-operational

2.3 NON-POWER REACTOR

The facility would house one Hermes reactor. The Hermes reactor is a KP-FHR with the core configuration made up of a pebble bed core, graphite moderator/reflector, and Flibe molten salt coolant. This will be a non-power test reactor with approximate dimensions of the reactor vessel being 3.4 meters in diameter and 4.7 meters in height. The facility will contain only one unit with a maximum thermal power of 35 megawatts (MW) thermal (MWth). The purpose of the reactor will be to demonstrate and test the design features and safety functions of the technology. It will be a non-power test reactor, whereby the heat generated in the core will not be used for the production of electric power. Instead, heat will be transported out of the core via the primary heat transport system (PHTS) and then dissipated into the atmosphere via the ~~primary heat rejection system (PHRS)~~heat rejection radiator. Figure 2.3-1 shows the process flow diagram for the reactor and heat dissipation~~-~~.

The reactor vessel and internal structures will be constructed of stainless steel that conforms to the 2019 composition specification requirements of American Society of Mechanical Engineers Section III, Division 5, with a targeted service life of 10 years. The moderator/reflector will be constructed of a nuclear grade graphite selected for its compatibility with the chemistry environment of the reactor core and would also have a targeted service life of 10 years.

The reactor core will use 4-centimeter (cm)-diameter graphite pebbles with embedded coated TRI-structural ISOtropic (TRISO) particle fuel. The particles will be comprised of a uranium fuel kernel and three layers of carbon and ceramic based materials that prevent the release of radioactive fission products. The maximum enrichment of the uranium fuel will be 19.55 weight percent, and the required start-up fissile inventory is estimated to be no greater than 25 kilograms (kg) ^{235}U. A fraction of the pebbles in the core are moderator (graphite-only) pebbles. Fuel pebbles are extracted from the reactor while online using the pebble extraction machine, the burnup is measured, and the fuel is either returned to the reactor or removed to storage. The estimated residence time for pebbles in Hermes is about 315 days.

Figure 2.3-1: Hermes Reactor Process Flow Diagram

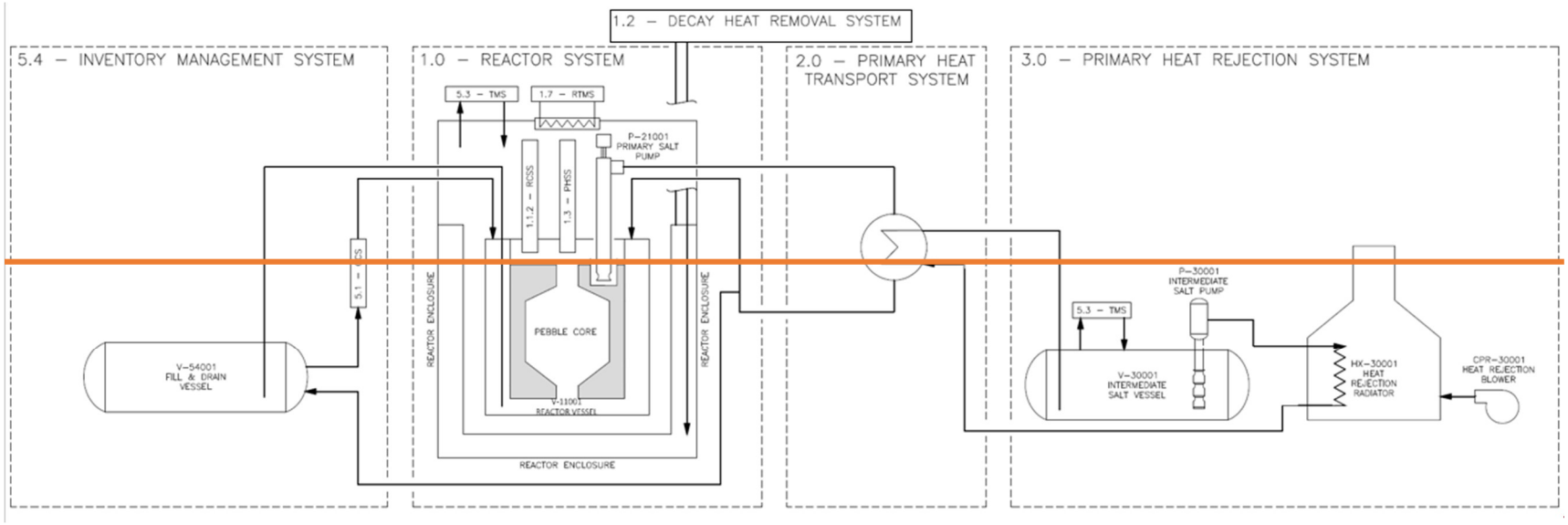

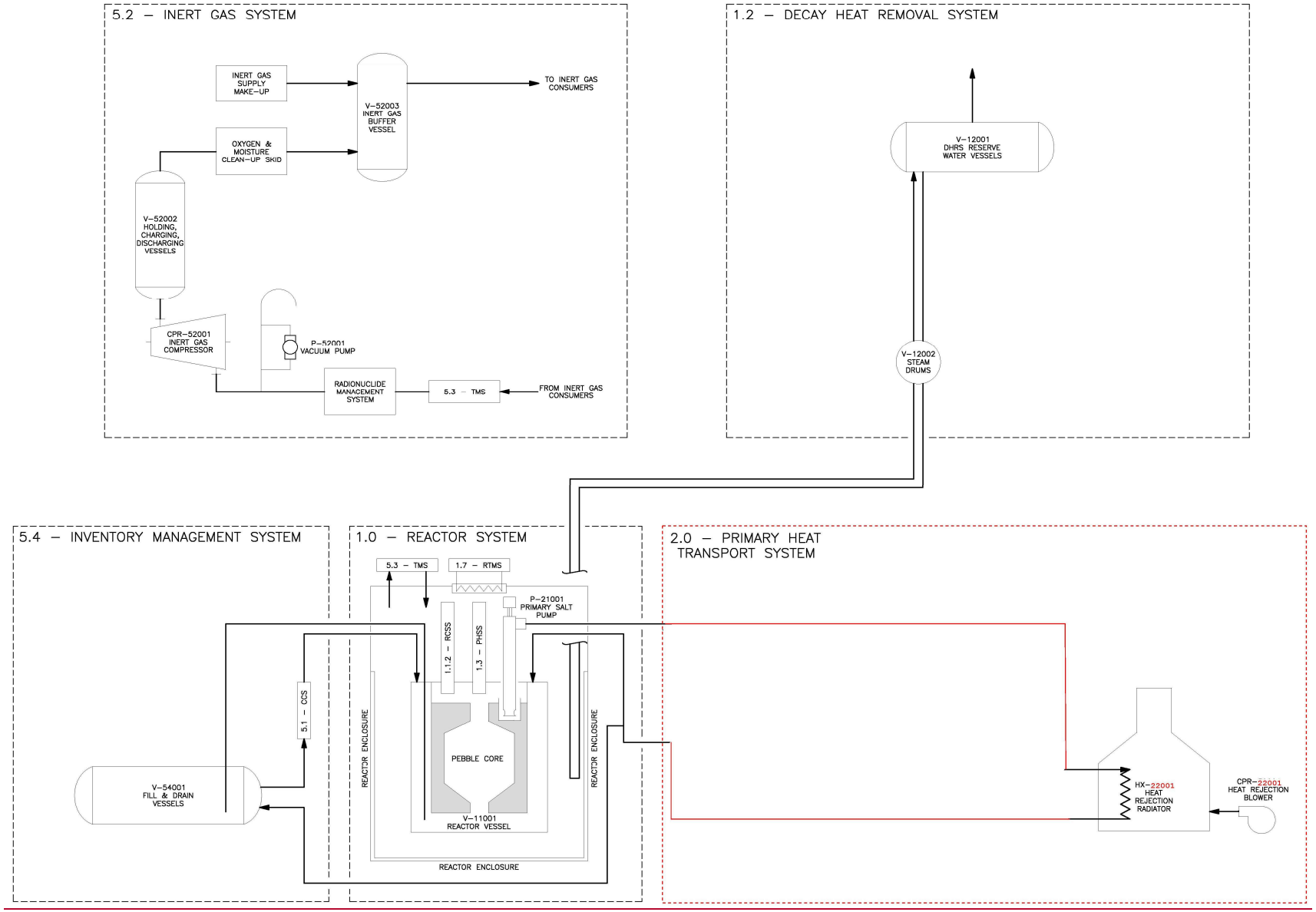
5.2 – INERT GAS SYSTEM
INERT GAS SUPPLY MAKE–UP
V–52003 INERT GAS BUFFER VESSEL
TO INERT GAS CONSUMERS
OXYGEN & MOISTURE CLEAN–UP SKID
V–52002 HOLDING, CHARGING, DISCHARGING VESSELS
CPR–52001 INERT GAS COMPRESSOR
P–52001 VACUUM PUMP
RADIONUCLIDE MANAGEMENT SYSTEM
5.3 – TMS
FROM INERT GAS CONSUMERS
1.2 – DECAY HEAT REMOVAL SYSTEM
V–12001 DHRS RESERVE WATER VESSELS
V–12002 STEAM DRUMS
5.4 – INVENTORY MANAGEMENT SYSTEM
V–54001 FILL & DRAIN VESSELS
5.1 – CCS
1.0 – REACTOR SYSTEM
5.3 – TMS
1.7 – RTMS
P–21001 PRIMARY SALT PUMP
1.1.2 – RCSS
1.3 – PHSS
REACTOR ENCLOSURE
PEBBLE CORE
V–11001 REACTOR VESSEL
REACTOR ENCLOSURE
REACTOR ENCLOSURE
2.0 – PRIMARY HEAT TRANSPORT SYSTEM
HX–22001 HEAT REJECTION RADIATOR
CPR–22001 HEAT REJECTION BLOWER

2.5 COOLING AND HEAT REMOVAL SYSTEMS

2.5.1 Raw Cooling Water System

No raw water usage is planned for the facility. Water is not planned to be pumped directly from the Clinch River, Poplar Creek, or groundwater.

2.5.2 Decay Heat Removal System

Decay heat would be removed from the fuel by the in-vessel natural circulation of Flibe. The natural circulation would transfer the heat to the reactor vessel shell. The DHRS would remove decay heat from the reactor vessel shell using a passive water-based, ex-vessel system via thermal-radiation and convection (Figure 2.5-1). The DHRS is a safety-related system that will be capable of heat removal via passive operation and will be always active above a threshold power. The DHRS will maintain adequate decay heat removal during postulated events above the threshold power, even if the ~~PHRS~~heat rejection subsystem is unavailable.

The DHRS will consist of four parallel, independent cooling trains, each designed to remove heat from the reactor vessel shell. Water would be supplied to the DHRS as described in Section 2.4. During normal operations, supply cooling water would be supplied to the four DHRS water storage tanks. If the supply water is unavailable, the DHRS water storage tanks will have sufficient inventory for the DHRS to perform its heat removal function for at least 72 hours. Each water storage tank would provide water to a set of thimbles that act as thermosyphons located circumferentially around the outside of the reactor vessel shell. The thimbles would remove heat from the reactor vessel through continuous boil off of the feedwater supply. Steam separators would provide an interface between the water storage tanks and the individual thimbles that the tanks supply. The steam separator would achieve this function by controlling the water level inside its volume through the use of a passive float valve located on the feedwater line. Fluid would be fed from the steam separator to the guide tube and back up the evaporator tube through buoyancy-driven flow. The density differential associated with this flow would be developed in the evaporator region, where heat would be absorbed in the fluid via convective heat transfer, causing nucleation and flow boiling. The two-phase mixture would be ejected into the steam separator, which would return liquid to the static level and allow steam to flow freely out the steam return line. The DHRS would operate with a continuous direct boil-off for reactor power greater than 10 MWth.

During normal operation, filtered and treated water would be used to continuously replenish the inventory of the DHRS. The DHRS water storage tanks would hold approximately 1,700 gallons each. This water inventory would be sufficient for the DHRS to perform its heat removal function for at least 72 hours of continuous cooling operation without operator action or electrical power. The DHRS will not directly interact with the primary coolant and heat is removed by passive means during any postulated event. The DHRS will also have a dual-walled design for leak prevention and detection.

2.5.3 ~~Primary~~ Heat Rejection Subsystem~~System~~

The PHTS would be responsible for transferring the required, normal operating, heat load from the reactor through ~~the primary heat exchanger (PHX) to the PHRS heat rejection radiator (HRR) and~~heat rejection subsystem to the surrounding atmosphere, which would be the ultimate heat sink. This heat load would include all normal steady operating loads (up to 35 MWth) along with any residual heat removal that may be required during normal reactor shutdown conditions. If the ~~PHRS~~heat rejection subsystem were to be unavailable when residual heat removal is required, the DHRS will be utilized instead. The ~~PHRS heat rejection~~heat rejection radiator stack is expected to be located just north of the Reactor Building in the Auxiliary Systems Building.

2.6 WASTE SYSTEMS

Waste generated at the facility during the phases of construction, operation, and decommissioning would include radioactive, nonradioactive, and hazardous wastes. Waste management systems would provide mechanisms for the collection and disposition of the waste in accordance with applicable State, NRC, and other Federal environmental regulations. The disposal of the waste would occur in permitted nonradioactive, nonhazardous, and hazardous waste disposal facilities and licensed radioactive disposal facilities.

2.6.1 Radioactive Liquid, Solid, and Gaseous Waste Systems

Radioactive waste generation will occur during the operations phase and decommissioning phase. The following subsections describe the waste systems implemented during the operations phase of the facility. These systems would be designed to limit discharges of radioactive materials in accordance with 10 CFR 20. The methods employed for the controlled release of those contaminants would be dependent primarily upon the state of the radioactive material (i.e., liquid, solid, or gaseous). Estimated quantities of the radioactive waste described in the following section are provided in Table 2.6-1.

2.6.1.1 Liquid Radioactive Waste Systems

Liquid radioactive waste systems would collect, store, monitor, process, and dispose of potentially radioactive liquid waste produced from normal reactor operations and maintenance. Liquid radioactive waste sources handled during operations and maintenance include those from vent condensates, drains, and decontamination. A portion of liquid radioactive waste would be expected to be recycled or packaged and shipped offsite for treatment and disposal. Small amounts of waste may be released to the wastewater treatment plant; this waste would be monitored and disposed of within the limits of 10 CFR 20, Appendix B, Table 3 (limits for releases to sewers).

Liquid (i.e., molten) salt wastes would be managed by separate systems to remove and containerize the salt waste. After removal of the salt from its circulating system, they would be collected in storage containers and allowed to cool and solidify during storage. ~~Both~~ Flibe ~~and nitrate salt~~ would then be disposed in solid form. ~~Approximately 200 tons of nitrate salt would be disposed annually during operation.~~ Used solidified Flibe would be stored onsite until decommissioning and then disposed as solid radioactive waste.

2.6.1.2 Solid Radioactive Waste Systems

Solid radioactive waste systems would provide for the collection, processing, packaging, and storage of wet and dry solid radioactive waste produced from normal reactor operations and maintenance. Since there would be no solid waste disposal at the site, low-level radioactive waste (LLRW) would be shipped offsite periodically during operations while other solid wastes would be stored onsite until the decommissioning phase and then would be disposed of in accordance with state and federal regulations.

2.6.1.2.1 Dry Solid Wastes

Dry solid wastes would include used personal protective equipment, contaminated rags, paper towels, paper, plastic containers, laboratory apparatus, small parts and equipment, air filters, and tools. Items of dry solid waste would be collected in suitable containers and LLRW would be stored onsite in approved storage areas. After a period of storage, the containers would be removed from the designated storage areas and prepared for disposal. A solid waste compactor would be considered to reduce the volume size of some solid waste for ultimate disposal. Shielded containers would be utilized in the event offsite shipment of high-activity waste if required.

2.6.1.2.2 Wet Solid Wastes

Wet solid wastes would include filters and or sieves from the inert gas system (IGS), chemistry control system, and IGS oxygen and moisture absorbers. Like dry solid wastes, wet solid wastes would be packaged and prepared for onsite storage and then eventual shipment offsite.

2.6.1.2.3 Tritium Management System

The tritium management system (TMS) would provide capture of tritium (H-3) from gas streams in various plant locations to reduce environmental releases. ~~Figure 2.6-1 identifies the tritium management system components and indicates the approximate distribution of tritium throughout the reactor system.~~ H-3 is produced primarily by neutron irradiation of lithium in the salt coolant, such as from lithium-7 (Li-7), lithium-6 (Li-6) remaining after initial enrichment, and Li-6 produced from transmutation of beryllium-9 (Be-9). The primary system functions of the TMS include:

- H-3 separation from argon in the IGS
- ~~H-3 separation from dry air in the PHRS cover gas~~
- H-3 separation from dry air in Reactor Building cells
- Final collection and disposition of H-3

The TMS would produce ~~three~~ two solid radioactive waste streams:

- High specific activity H-3 stored as metal hydride
- ~~High specific activity H-3 on molecular sieve~~
- Low specific activity tritium on molecular sieve

2.6.1.2.4 Fuel Pebble Handling and Storage System

Operation of the facility is estimated to be 10 years and would generate approximately 38,800 spent pebbles per year. Therefore, over this duration, it is estimated that 388,000 used pebbles would be produced. The Hermes reactor fuel and moderator pebbles are continually cycled through the pebble handling and storage system (PHSS) which removes pebbles from the reactor for inspection. A fuel pebble is removed permanently from circulation and placed in a storage canister if it meets pre-set standards for burnup and integrity. Fuel and moderator pebbles that are removed are replaced with new pebbles. This system requires a constant supply of new fuel pebbles. The storage canisters would be transferred to an onsite canister storage system with an estimated conservative storage capacity of 192 canisters. Section 2.7.1 provides a description of spent fuel storage.

2.6.1.3 Gaseous Radioactive Waste System

The facility is not expected to need a gaseous radioactive waste system. Gaseous radioactive wastes generated would be primarily discharged to the Reactor Building exhaust system, in which they pass through a high efficiency particulate air filter. Releases to the atmosphere would be controlled such that the total radiation exposure to persons outside the controlled area is as low as reasonably achievable and does not exceed applicable regulations.

2.6.2 Nonradioactive and Hazardous Waste Systems

The facility would generate general types and quantities of nonradioactive and nonhazardous solid waste. No specific systems are planned other than waste management plans and policies that would control nonradioactive and nonhazardous solid wastes. Solid waste management and control measures for the facility would include waste reduction, recycling, and waste minimization practices that would be employed during all project phases (construction, operation, decommissioning). Such wastes would be managed in accordance with applicable federal and state regulations.

Table 2.6-1: Estimated Type and Quantity of Radioactive Wastes

Description	Matrix	10 CFR 61.55 Waste Class	Contents	Volume/year	No. of Shipments/year	Destination
IGS Capture Materials	Solid	B	Zr-Based Getter Alloy, H-3	10 ft^3	1	Waste Control Specialists
~~PHRS Capture Materials~~	~~Solid~~	~~B~~	~~Molecular Sieve, H-3~~	~~10 ft^3~~	~~1~~	~~Waste Control Specialists~~
Reactor Cell Capture Materials	Solid	B	Molecular Sieve, H-3	660 ft^3	8	Waste Control Specialists
Flibe	Solid	B or C	Be, H-3, C-14, Activation, Fission, and Transmutation Products	-	Only shipped at decommissioning (3 shipments)	Waste Control Specialists
~~Nitrate Salt~~	~~Solid~~	~~A or B~~	~~H-3~~	~~200 tons 2,870 ft^3~~	~~10~~	~~Energy*Solutions* or Waste Control Specialists~~
Dry Active Waste (DAW)	Solid	A	PPE, filters etc.	< 8,800 ft^3 [(a)]	< 26 [(b)]	Energy*Solutions* or Waste Control Specialists
Liquid Waste	Liquid	A	Activated water or maintenance liquids (i.e., cleaners)	This value is not expected to be significant.	This value is not expected to be significant.	Energy*Solutions*
Spent Fuel	Solid	-	-	38,800 fuel pebbles in approximately 18 canisters	Shipped at decommissioning or for fuel qualification testing	Federal Facility

[(a)] Based on 46 55-gallon drums per shipment.
[(b)] The total LLRW waste shipments would be bounded by 46 annual shipments, the number of shipments from an 880 MWe reference reactor (Reference 1, Reference 2).

Figure 2.6-1: ~~Approximate Tritium Distribution throughout the Reactor System~~Not Used

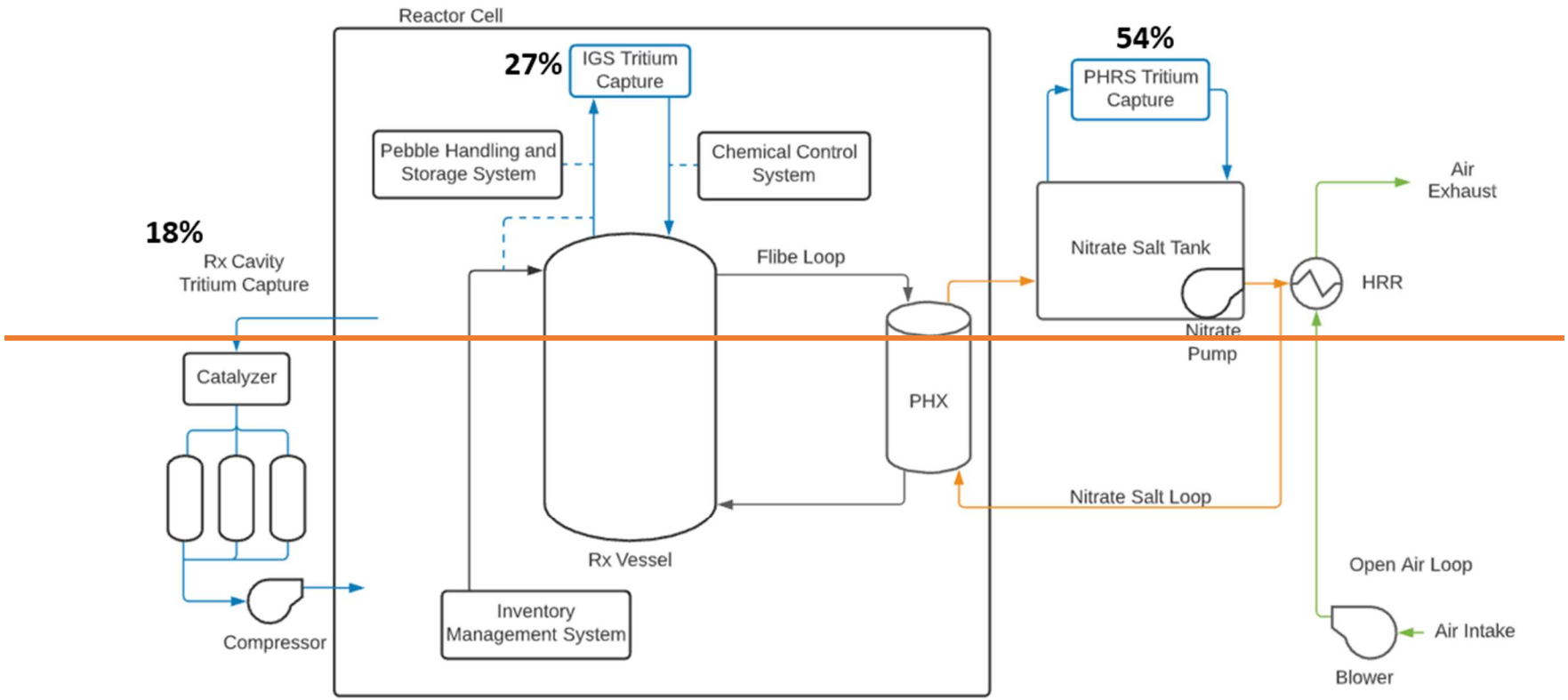

Flibe is utilized in the IMS, the PHTS, and the reactor, all of which are located in the Reactor Building. Used radioactive Flibe that is removed from the IMS in liquid form during normal operations would be filled into containers where it would be allowed to cool and solidify. It is estimated that the Flibe's specific activity in curies per ton (Ci/ton) after a cooling period of 1 year would be 380 Ci/ton. No other treatment would be required. The solid Flibe is anticipated to be stored onsite until decommissioning when it would be shipped to Waste Control Specialists for Class B or C LLRW disposal. Storage areas for solidified Flibe waste would require additional radiation shielding to keep occupation radiation doses below regulatory limits an as low as reasonably achievable.

An estimated 120 drums of Flibe waste would be generated over the assumed 10 year licensed life of the facility. The waste would require a Type B shipping cask. The capacity of a Type B cask is dependent on the shielding necessary. Assuming a minimum of six drums per cask, 120 drums would require 20 cask shipments. Alternatively, Type B drums could be used likely resulting in more drums per shipment and fewer shipments.

~~During operations, nitrate salts used to transfer heat from the reactor to the heat dissipation system would be pumped through the PHRS. The nitrate salts would be approximately 60 percent sodium nitrate and 40 percent potassium nitrate by weight. Used radioactive nitrate salt would be pumped into storage containers and allowed to cool prior to being shipped to Waste Control Specialists for Class B LLRW disposal or to Energy*Solutions* for Class A LLRW disposal. No other treatment would be required. Based on an estimated 200 tons of nitrate salt shipped to the site annually, an average of 10 truck shipments per year would be required to ship an equivalent amount of salt waste. Waste containers would not require radiation shielding.~~

The IGS would transport radioactive materials (fission products, tritium, and other radionuclides) for downstream treatment. The TMS would capture tritium from gas streams in various plant location in order to reduce environmental releases. The TMS would separate tritium from argon in the IGS~~, from dry air in the PHRS cover gas,~~ and from dry air in the Reactor Building cells and collect the tritium in solid materials for final disposition as a solid LLRW. These wastes are expected to be Class B LLRW that would be stored on site in approved shipping containers until transported to Waste Control Specialist for disposal.

Tritium would not ultimately be stored in a liquid or gaseous form in the TMS. A modest amount of water may be used for analytical purposes such as tritium trapping in water bubblers and liquid scintillation counting (estimated 1 ft^3/year with dissolved tritium activity of 10 Ci [10 Ci/year total liquid water waste]). There would be a small amount of tritium ingress into other water systems, but it is not expected that water from these systems would be released as effluent from the Reactor Building.

The total number of LLRW shipments has not been calculated. ~~However, including the number of waste nitrate slat shipments, the~~The total number of LLRW shipments would be expected to be bounded by the 46 annual shipments of LLRW provided for an 880 MWe reference reactor described in NRC guidance (Reference 1).

2.7.3 Nonradioactive Materials

Nonradioactive Flibe is anticipated to be shipped to the site in approximately 20 initial 1-ton shipments with an additional 20 tons estimated to be shipped before the end of the first two years of operation. The Flibe would be stored in the Reactor Building. ~~Nitrate salt would be shipped to the facility at an estimated rate of 200 tons per year in approximately 28 shipments (7 tons per shipment) and stored in the intermediate salt vessel located in the Reactor Building.~~ As discussed in Section 2.4, the facility would also receive twelve 4,000-gallon shipments of demineralized water each month.

below 25 tpy for all HAPs combined. As a result, the project is subject to non-Title V requirements. No air quality modeling is required for non-Title V permitting.

4.2.1.2.1 Gaseous Effluents

Air emissions of nonradiological gaseous criteria pollutants and HAPs would be emitted during the operations phase from: (1) intermittent use of diesel-powered or natural gas powered standby power generation sources such as generators or combustion gas turbines, ~~(2) intermittent use of propane-fired heaters for the intermediate coolant located in the primary heat rejection system (PHRS) during maintenance activities,~~ (~~3~~2) diesel-powered trucks that deliver material and haul off wastes, and (~~4~~3) worker commuter vehicles. Radiological air emissions would be produced in the operations phase from the ~~primary heat rejection~~heat rejection radiator stack, decay heat removal system vents, Reactor Building ventilation stack, and spent fuel cooling stack.

4.2.1.2.2 Evaluation of Emission Impacts on Air Quality

Vehicle and Other Emissions

During the operations phase, vehicular air emissions occur from the commuting workforce and from routine deliveries to/from the facility. The volume of traffic generated during operations is considerably lower than that expected during construction. Additionally, the lands on the developed site are either developed surfaces (buildings, paved parking/access road) or have been landscaped. Limitation of routine vehicle usage to paved areas reduces the emissions of fugitive dust. Impacts from vehicular air emissions and fugitive dust are far less than during the construction phase. Therefore, impacts during the operations phase would be SMALL.

Release Point Characteristics

There would also be intermittent emissions from standby power generation sources such as generators or combustion gas turbines. These generators would operate less than 500 hours per year. If used exclusively for replacement or standby service and at or less than 500 hours per year, these generator units would not require a construction or operating permit, as outlined in Chapter 1200-3-9-04 (Construction and Operating Permits) of the Tennessee Air Pollution Control Regulations. In addition, the potential to emit for the generator units based on 500 hours of operation would produce insignificant emissions (less than 5 tons per year for criteria pollutants and less than 1,000 pounds per year for an individual hazardous air pollutant [HAP]), as defined in Chapter 1200-03-09 of the Tennessee Air Pollution Control Regulations; therefore, impacts would be SMALL.

Uranium Fuel Cycle

Hermes will use significantly less uranium over its lifetime than a light-water power reactor. Approximately 2.33 MTU would be needed over the 10-year licensed operating life compared to an average of 20 to 33 MTU per year for light-water power reactors. Therefore, the environmental impacts from air emissions generated during mining, enrichment, and fuel fabrication activities would be SMALL and bounded by impacts described in Table S-3 of 10 CFR 51.51 which considers the impacts from a generic LWR requiring an average of 33 MTU per year.

4.2.1.2.3 Greenhouse Gas (GHG) Emissions

Greenhouse gases trap heat in the atmosphere, absorbing and emitting radiation in the thermal infrared range. The most important of these gases are carbon dioxide (CO_2), methane, nitrous oxide, and

interest are present either on the site or in immediately adjacent offsite areas. Habitats of the site and adjacent lands are not considered to be high value or important ecological systems.

The principal air emissions from the facility during normal reactor operating conditions would be waste heat from the ~~PHRS~~heat rejection subsystem, decay heat removal system (DHRS), and spent fuel cooling stacks. The heat rejection stack~~s~~ would be approximately 100 feet above site grade, and heat emissions are not expected to impact on-site or offsite communities and habitats of special interest. Additionally, the facility does not utilize cooling towers. Consequently, there would be no operational impacts associated with wind drift (i.e., gaseous or particulate emissions to the air from cooling towers). Herbicide application for lawn maintenance would be minimal and only used on the site, and operational impacts to offsite areas identified as places and entities of special interest would be minimized. Thus, operation impacts to the offsite areas identified as places and entities of special interest would be SMALL. Mitigation measures and management controls are not needed.

4.5.2.2 Aquatic Communities and Wetlands

Aquatic resources and wetlands near the site are described in Sections 3.5.5 and 3.5.6, respectively. Aquatic resources near the site include wetlands associated with Poplar Creek and the Clinch River arm of Watts Bar Reservoir offsite include wetlands and endangered resources (see Section 3.5.11) identified by the TDEC in Roane County. Poplar Creek is adjacent to the site and the Clinch River arm of Watts Bar Reservoir is within 0.4 miles of the site (see Table 2.2-2). Other waterbodies within 5 miles of the site are the East Fork Poplar Creek and Bear Creek, which are tributaries to Poplar Creek upstream of the site, and the Emory River. Wetlands associated with Poplar Creek and the Clinch River arm of Watts Bar Reservoir, as well as various holding ponds in the ETTP near the site, would be outside the limits of disturbance (see Figures 2.2-1 and 3.5-2).

The facility will not withdraw water from surface waterbodies or from groundwater; rather, water would be provided by the City of Oak Ridge Public Works. Thus, there would be no operational impacts associated with impingement or entrainment of aquatic biota. Furthermore, the facility would not discharge directly into any nearby waterbody and waste heat is discharged to the atmosphere thus avoiding any pollutant or thermal effects on aquatic resources. Facility stormwater systems would be designed to meet NPDES permit requirements. In addition, a SWPPP for the facility would be prepared and implemented. An onsite stormwater pond would be used to control stormwater runoff which, when combined with the distance to the nearest offsite waterbodies, minimizes runoff and siltation to offsite receiving streams. Thus, operational impacts on aquatic communities and wetlands would be SMALL.

4.5.2.3 Terrestrial Communities

Terrestrial plant communities are characterized in Section 3.5.7.1 for the site and areas in proximity to the site. The terrestrial communities of the site and areas in close proximity to the site are mainly developed for other uses. Herbicide application is occasionally used around buildings and driveways as part of lawn maintenance activities to control weedy species. Operational impacts to plant communities would be SMALL.

Plant and animal communities of the site and nearby areas are described in Section 3.5.7. With the dominance of herbaceous/grassland vegetation established on the majority of the site following building demolition, the quality of wildlife habitat is low, and wildlife use of the site is minimal. With the dominance of grassland/herbaceous vegetation and former developed areas on the site and lack of wildlife habitat, wildlife use on the site would be minimal. Mobile wildlife species generally would avoid the area due to operational activity. Additionally, there are no known occurrences of threatened or endangered species on the site. Thus, operational impacts to wildlife would be SMALL.

4.8.1.5 Physical Occupational Hazards

Physical occupational hazards would exist during all phases of the project, particularly during the construction and decommissioning phases. Because occupational hazards occur onsite and during construction, operation, and decommissioning of the facility, they are considered direct impacts. No indirect impacts (offsite) are identified. Table 4.8-2 lists the general types of occupational physical hazards (physical, electrical, and chemical) that may be present at the facility during the phases of the project. Occupational physical hazards would be reduced or eliminated through implementation of safety practices, training, and physical control measures. Operations would adhere to the regulations and standards established by the U.S. Occupational Safety and Health Administration and the National Institute of Occupational Safety and Health regulations. Therefore, the impacts from occupational hazards would be SMALL.

4.8.1.6 Chemical Exposure to the Workforce

As planned, the facility would not store or use highly hazardous chemicals in quantities above the Threshold Quantities in Appendix A to 29 CFR 1910.119 during construction. During operation, quantities of Flibe ~~and nitrate salt~~ above the Threshold Quantity would be present onsite and therefore, the requirements of 29 CFR 1910.119 Process Safety Management of Highly Hazardous Chemicals apply to the facility. The majority of process chemicals would be used in liquid form and contained in tanks and pipes, limiting workforce exposure. Because potential chemical exposure to the workforce during operation would occur onsite, they are considered direct impacts. No indirect impacts (offsite) are identified. The facility design and practices would ensure compliance with storage requirements and limit exposures. Therefore, impacts from chemical occupational hazards would be SMALL.

4.8.1.7 Environmental Monitoring Programs

State regulations prescribe nonradiological monitoring requirements and may include those associated with emergency management, environmental health, drinking water, water and sewage, pollution discharge, air pollution, and hazardous waste management. The facility would generate gaseous effluents resulting from operations and the ventilation of operating areas. Specific monitoring requirements in support of required air permits would be determined through the permitting process.

4.8.1.8 Mitigation Measures

Mitigative measures such as administrative procedures and protective measures would be used to ensure protection of human health and the environment. BMPs during construction, operation, and decommissioning will be employed to minimize pollutant releases to onsite and offsite areas, to ensure delivery of wastewater to the Rarity Ridge wastewater treatment facility, and to control air emission, as appropriate. The facility is expected to be designed to have minimal liquid discharge from the Reactor Building. Required permits would be obtained for applicable effluents and emissions. Furthermore, waste reduction practices, including recycling and waste minimization, would be employed.

4.8.2 Radiological Impacts

This section describes the public and the occupational health impacts from the management of radioactive materials at the facility. During the construction phase, radioactive material present on site would be present for construction-related activities such as compaction testing and radiography. These radioactive materials would be present as sealed sources covered by contractor radioactive materials licenses. The impacts from the use of these radioactive materials on both occupational health and public health would be SMALL when the devises containing the radioactive materials are operated according to standard operating procedures. The radiological impacts addressed in the following subsections would result from reactor-related source during the operation and decommission phases of the facility.

4.8.2.1 Layout and Location of Radioactive Material

Figure 2.2-3 depicts the physical layout of the site indicating site features, structures, and designated areas. Radioactive materials would be within the Reactor Building and the Auxiliary Systems Building with the high radiation materials limited to the Reactor Building. The Reactor Building would contain spent fuel storage facilities with a capacity sufficient for 10 years of reactor operation. Access to the Reactor Building and the Auxiliary Systems Building would be strictly controlled and personnel entering these buildings would be participants in the occupational dose monitoring program.

4.8.2.2 Characteristics of Radiation Sources and Expected Radioactive Effluents

4.8.2.2.1 Gaseous Sources of Radiation

Gaseous radioactive effluents would be discharged primarily through the heat rejection subsystem, as well as the Reactor Building exhaust system. However, as stated in Subsection 2.6.1.3, there is no anticipated need for a gaseous radioactive waste system. Discharges from heat rejection subsystem would be monitored prior to release. Discharges from the Reactor Building exhaust system would pass through a HEPA filter and would be monitored prior to release. Tritium is expected to be the dominant routine gaseous radionuclide. No significant gaseous radioactive effluents are expected to be discharged through the spent fuel cooling system (SFCS)~~,~~ or the DHRS~~, or the PHRS~~. All releases would be within the limits of 10 CFR 20 with consideration of the guidance provided in Regulatory Guide 4.20; therefore, the impacts from gaseous sources of radiation would be SMALL.

4.8.2.2.2 Liquid Sources of Radiation

The major liquid sources of radiation during operations would include the Flibe reactor coolant~~ and the liquid nitrate salt intermediate coolant~~. However, when ~~these~~ this material~~s~~ have reached the end of ~~their~~ its useful life, ~~they are~~it is allowed to cool and solidify. Therefore, ~~they~~ it would be managed as solid low-level radioactive waste (LLRW) during operations and decommissioning. Shielding materials, such as thick concrete walls, would be used to shield staff from large radiation exposures. Where necessary, piping used to circulate radioactive liquids would also be shielded to reduce radiation exposure rates. Exposures to these materials would be controlled to limit occupational doses with below regulatory limits provided in 10 CFR 20, Subpart C, *Occupational Dose Limits*. There would be small volumes of liquid wastes containing primarily tritium. These wastes would only be disposed of within the limits of 10 CFR 20 Table 3 (limits for releases to sewers); therefore, the impacts from liquid sources of radiation would be SMALL.

4.8.2.2.3 Fixed Sources of Radiation

During operations, solid sources of radiation that contribute to the direct dose would include fresh, circulating, and spent nuclear fuel, radioactive solid Flibe~~ and nitrate salts~~, and other LLRWs, such as used moderator pebbles. During decommissioning, sources of radiation would also include the Hermes reactor and activated reactor system components and structural materials surrounding the reactor. These sources would be within the Reactor Building until they are removed for routine waste shipments or as part of facility decommissioning. Shielding materials, such as thick concrete walls, would be used to shield staff from large radiation exposures and control radiation doses to below the occupational limits provided in 10 CFR 20, Subpart C; therefore, the impacts from solid sources of radiation would be SMALL.

4.8.2.3 Baseline Radiation Levels

Background radiation levels and radiation levels in the vicinity of the site is discussed in Section 3.8. The site was once home the DOE's K-31 and K-33 gaseous diffusion plants and supporting facilities. Prior to

transferring the properties for industrial development, the DOE conducted environmental baseline studies for the properties (Reference 1 and Reference 2). The baseline studies note that remedial actions at the site's cleanup radiological and nonradiological contamination met the conditions for unrestricted industrial use as the areas did not pose an unacceptable cumulative excess lifetime cancer risk of more than 1E-04 or a hazard index of more than 1 (Reference 1 and Reference 3). However, remediation was not conducted with a goal of cleaning up the sites to background levels. Therefore, there could be residual radioactive and nonradioactive contaminants at the site and in the site groundwater that are detectable above background but below the risk-based standards.

Ongoing environmental monitoring is conducted across ORR by DOE. The facility would be in the northwest quadrant of the ORR, so a useful resource and indicator of the baseline radiation levels would be based on DOE's ORR environmental surveillance program. Radiological dose measurements such as measured radiation dose rates, airborne radioactivity concentrations, and waterborne radioactivity concentrations at specified DOE locations on ORR where environmental radiological monitoring data already exist can be extracted from the most recent DOE ORR Annual Site Environmental Report and used as a baseline. DOE has estimated that the maximum radiation dose a hypothetical offsite individual could have received from DOE activities on ORR was estimated to be 0.4 mrem from air pathways, 2 mrem from water pathways, and 0.07 mrem from consumption of wildlife harvested on ORR (Reference 3). Cumulatively, this 3 mrem/yr dose is significantly less than the 310 mrem annual average dose to people in the U.S. from natural or background radiation.

4.8.2.4 Calculated Annual Total Effective Dose Equivalent, Annual Average Airborne Radioactivity Concentration, and Annual Average Waterborne Radioactivity Concentration

This section discusses the calculated annual total effective dose equivalent (TEDE)~~, annual average airborne radioactivity concentration, and annual average waterborne radioactivity concentration at the dose receptor corresponding~~ at the site boundary, to the maximally exposed individual (MEI) in the unrestricted area, and to an analytical nearest full-time resident. Tritium is expected to be the dominant routine radionuclide release. The gaseous effluent release was modeled under normal operations from the heat rejection stack including a bounding tritium emissions rate conservatively modeled equal to the tritium generation rate of 62,500 Curies per year. This bounding tritium emissions rate does not evaluate the anticipated retention of tritium from the reactor and engineered systems.

The MEI is located at the location with the greatest modeled dispersion and deposition from airborne emissions which is 0.5 miles SSE within the boundary of the ETTP. The dose to the analytical nearest resident is estimated using the distance from the air emission point to the actual nearest resident (1.1 miles NNW) but at the location of the greatest modeled dispersion and deposition (in the eastern direction). The calculated dose at the site boundary and the MEI do not include contributions from the ingestion of milk, meat, or vegetables as there are no residential or agricultural properties at these locations. The analytical nearest resident dose, however, does include dose contributions from ingestion of meat and vegetables that are impacted by airborne radionuclides. A milk ingestion dose was not included as no dairy production in the area was identified (see Table 2.2-2). The ingestion pathway for meats and vegetables was included for the analytical nearest resident at that location regardless of the actual ingestion rates of the residents that are located near the site.~~where the doses due to normal operations are expected to be maximized. The distance to the nearest resident (0.7 miles, 1,127 meters) has been conservatively modeled for all sectors. Additionally, TEDE, annual average airborne radioactivity concentration, and annual average waterborne radioactivity concentration to the nearest full-time resident is discussed.~~ The calculated doses ~~to the public~~ are summarized in Table 4.8-3 with dose models and assumptions described in the following subsections.

The radiation dose to the public due to transportation of radioactive waste is discussed in Section 4.10. The dose to the public due to the transportation of radioactive waste is considered an indirect effect of facility operation.

4.8.2.4.1 Gaseous Effluents

Sources of radioactive gaseous effluents are discussed in Section 4.8.2.2.1. The effluents, which consist of the noble gases krypton and xenon, in addition to iodine and tritium, would be released to the environment primarily through the heat rejection stack as well as the Reactor Building ventilation system exhaust. Prior to release to the environment, gaseous effluents from the heat rejection stack would be monitored, and gaseous effluents from the Reactor Building ventilation system exhaust would be monitored and passed through a HEPA filter. There is no anticipated need for holding time to allow for decay. No significant gaseous radioactive effluents are expected to be discharged through the SFCS~~,~~ or the DHRS~~, or the PHRS~~.

The TMS would capture tritium from gas streams in the facility. Molecular sieve desiccants would capture tritium ~~from the intermediate loop cover gas and~~ from the reactor cell atmosphere. A zirconium-alloy metal hydride would capture tritium, separating it from argon in the reactor inert cover gas. Collection and disposition of tritium by the TMS would reduce the quantity of tritium released to the environment.

Long-Term (Routine) Diffusion Estimates

For routine releases to the atmosphere, the concentration of radioactive material in the surrounding region depends on the amount of effluent released, the height of the release, the momentum and buoyancy of the emitted plume, the wind speed and direction, atmospheric stability, airflow patterns around the site, and various effluent removal mechanisms. This subsection describes the development of the long-term diffusion and deposition estimates for the facility.

To facilitate modeling of the long-term gaseous effluent concentrations and their subsequent health impacts, the NRCDose modeling package from the Radiation Protection Computer Code Analysis and Maintenance Program (RAMP) was utilized. As stated on RAMP's website:

> *NRCDose is a user-friendly graphical user interface (GUI) for the LADTAP II, GASPAR II, and XOQDOQ programs which operate under all Microsoft Windows™ platforms. These Fortran codes implement NRC's current requirements for As Low As Reasonably Achievable (ALARA) for radioactive effluents from nuclear power plants.*

The NRCDose package consists of three distinct programs: XOQDOQ, GASPAR II and LADTAP. XOQDOQ is the atmospheric dispersion model addressing Regulatory Guide 1.111. XOQDOQ is designed to calculate the annual relative effluent concentrations ~~(X/Q)~~ and deposition ~~(D/Q)~~ due to routine releases ~~from nuclear power plants~~. XOQDOQ evaluates the impacts at radial downwind distances as well as at sensitive locations specified by the user. GASPAR II is an air release radiation dose code that models the gaseous effluent pathway using the release model described in Regulatory Guide 1.109. GASPAR II requires input of released source terms (curies per year), atmospheric dispersion from the XOQDOQ model and surrounding demographics. The code was developed to analyze airborne effluents from light-water-cooled reactors during routine operations. GASPAR II considers such pathways as inhalation, plume-immersion, ground-shine, and ingestion of various contaminated media (meat, milk, vegetation, etc.). Dose calculations can be applied to a defined population or an individual using dose conversion factors from the International Commission on Radiological Protection (ICRP). Each calculation considers multiple organs (including but not limited to bone, G.I. tract, kidney, liver, lung, skin, and thyroid) as well as the whole-body dose. ~~Dose calculations can be applied to a defined population or an individual who~~

~~are evaluated for four age groups: infants (0-1 years), children (1-11 years), teens (12-18 years), and adults (over 18 years). Each calculation considers seven organs (bone, G.I. tract, kidney, liver, lung, skin, and thyroid) as well as the whole-body dose.~~ The third model included in NRCDose, LADTAP, addresses radiation doses associated with liquid pathway is not applicable to the facility as the liquid effluents (as discussed in Section 4.8.2.4.2) are expected to be negligible.

Estimates of atmospheric relative concentrations, X/Q, and relative deposition values, D/Q, were calculated for routine releases from the facility for long-term (annual) time intervals. The XOQDOQ modeling uses joint frequency distributions (JFDs) of wind speed, wind direction, and atmospheric stability class, the XOQDOQ program provides annual average X/Q and D/Q values at the required distances and sectors. Radioactive decay and dry deposition are considered, and a straight-line Gaussian trajectory is modeled between the point of release and receptors at distances for which X/Q and D/Q values are calculated.

Calculation Methodology and Assumptions

Site-specific, validated meteorological data covering a 5-year period of record from January 1, 2016 through December 31, 2020 from Tower L was used to quantitatively evaluate routine-releases at the facility. The meteorological data needed for the X/Q and D/Q calculations in XOQDOQ included wind speed, wind direction, and atmospheric stability as JFDs.

Validated data from ORR Tower L, which is located approximately 1 mile south-southeast of the site, was used to prepare JFDs for the XOQDOQ modeling. Wind speed and wind direction data at 30 meters were used. Temperature difference data between the 10- or 15-meter and the 30-meter heights were used to calculate the atmospheric stability classes based on Table 2.2 in Regulatory Guide 1.23 (Table 4.8-4). The anemometer on Tower L was located at the 10-meter level from January 2016 through October 2017 and was moved in November 2017 to the 15-meter level, where it remained through May 2021. Data was prepared for January 1, 2016 through December 31, 2020. Of the 43,848 hours of possible data, all 43,848 hours had valid data combinations of wind speed, wind direction, and stability class. This data capture was possible due to use of collocated backup data levels available for Tower L. The resulting data recovery was 100 percent, well above the 90 percent data recovery indicated in Regulatory Guide 1.23. Although this regulatory guide is applicable to power reactors, this data recovery guidance is considered reasonable for non-power reactors.

Six wind speed classes were defined and used in the modeling. The first class consists of calm winds. The wind speed classes used are shown in the JFD tables. Tables for each stability class that was present during the 2016-2020 data period are shown in Tables 4.8-5 through 4.8-10. The largest hourly wind speed in the 5-year dataset is 24.4 miles per hour. The percent occurrence of hours for each wind direction is shown in Table 4.8-11, and the percent occurrence of hours for each stability class is shown in Table 4.8-12.

Facility-specific data to be considered in the XOQDOQ model include building minimum cross-sectional area, building height, and meteorological tower height at which wind speed was measured (Table 4.8-13). The building height and cross-sectional area are used in the calculation of building wake effects. Regulatory Guide 1.111 identifies the tallest adjacent building as appropriate for use. Building area is defined as the smallest vertical-plane, cross-sectional area of the affected building, in square meters. Other inputs to the model included a release height (100 feet for the stacks releasing tritium) and a representative wind height (30 meters).

Using the JFDs, XOQDOQ provides the X/Q values as a function of wind direction for various time periods at the exclusion area boundary (EAB), at points of maximum individual exposure, and at points within a radial grid of sixteen 22-1/2 degree sectors extending to a distance of 50 miles. As discussed

above, a circular, analytical EAB was defined at a fixed distance from an effluent release boundary (ERB) release zone. Additionally, receptors were set at the low population zone (LPZ) distance at each of the 16 wind direction sectors. Finally, both *X/Q* and *D/Q* estimates were calculated for the nearest residence and the site boundary across each sector.

Consistent with NRC Regulatory Guide 1.111, *Methods for Estimating Atmospheric Transport and Dispersion of Gaseous Effluents in Routine Releases from Light-Water-Cooled Reactors*, regarding the radiological impact evaluations, radioactive decay and deposition was calculated. While not directly applicable to non-power reactors, the methods in Regulatory Guide 1.111 were considered reasonable for the smaller-scale Hermes non-power reactor. For conservative estimates of radioactive decay, a half-life of 2.26 days for short-lived noble gases, a half-life of 101 days for long-lived noble gases, and a half-life of 8 days for iodines are acceptable for releases to the atmosphere. At sites where there is not a well-defined rainy season associated with a local grazing season, wet deposition does not have a significant impact. In addition, the dry deposition rate of noble gases, including tritium, is such that depletion is negligible within 50 miles (Regulatory Guide 1.111). Therefore, in this analysis, ~~only the effects of~~ dry deposition of ~~iodines~~ radionuclides other than tritium, carbon-14, and noble gases were considered. The calculations considering “dry deposition” and “no deposition” were identified in the output as "depleted" and "undepleted.”

The facility is surrounded by complex terrain, with alternating ridges and valleys oriented along a southwest to northeast axis. Terrain heights were provided for each of the 16 wind directions for 22 annular distances for which XOQDOQ by default calculates impacts. These heights were generated using the EPA terrain pre-processor, AERMAP. The local wind patterns are influenced by the complex terrain, with up-valley (southwest to west southwest) and down-valley flow (northeast to east northeast) patterns common, and stable conditions with light winds frequently observed, especially during the summer and fall seasons. These terrain features, along with light, variable winds can produce nonlinear flows as the trajectory of a plume changes in speed and direction with distance from its release point. These nonlinear flow patterns can influence the dispersion around the facility.

For complex terrain sites where these nonlinear dispersion effects are apparent, adjustments to a straight-line model (as XOQDOQ) are possibly warranted. Specifically, adjustment factors for terrain confinement and recirculation effects on annual average dispersion concentrations at boundary locations must be considered. In the XOQDOQ model (NUREG/CR-2919), the computed ground-level concentrations can be adjusted to account for nonlinear trajectories (plume recirculation or stagnation). As outlined in NUREG/CR-2919, the adjustments can be accomplished in two ways. First, a standard default correction factor that is a function of distance can be applied to the X/Q and D/Q values for each of the directional sectors. Second, adjustments can be made by a comparison of results with a variable trajectory model. If the variable trajectory model produces higher concentrations than the straight-line model, the concentration ratio, or adjustment factor, is used in the straight-line model to correct for non-linear dispersion effects.

The 2019 Environmental Report conducted for the Clinch River Nuclear (CRN) site Early Site Permit application (Reference 4) examined these complex terrain considerations using the second approach comparing results from the XOQDOQ model with the CALPUFF trajectory model. The CALPUFF Version 6.42 dispersion modeling system is an advanced, non-steady-state, meteorological and air quality modeling system listed by the EPA in its Guideline on Air Quality Models that can be applied in near-field applications involving complex meteorological conditions.

The CRN site is located approximately 3 miles to south-southeast and is situated in similar surrounding terrain as the facility. Given its proximity and similar surroundings, the Clinch River analysis can serve as a sufficiently representative surrogate for the facility. The 2019 CRN site ER (Reference 4) details the

setup and subsequent analysis with one key point stating that CALPUFF was run without wet and dry deposition refinement options with the intent of yielding more conservative (i.e., higher) predicted ground concentrations. For Clinch River, comparison of both model results across all wind directions, for both the EAB and LPZ, XOQDOQ produced multi-year concentration averages that were consistently higher by at least an order of magnitude over those produced using CALPUFF. Therefore, it was concluded for Clinch River that the XOQDOQ model provided adequately conservative annual average X/Q values, thus requiring no nonlinear adjustment factors to the XOQDOQ annual average X/Q and D/Q values. For the facility, similar conservative impacts from XOQDOQ are anticipated.

The multiple-year average X/Q values for the undepleted case, the 2-day decay case, and the 8-day decay case at the LPZ and analytical EAB are summarized in Tables 4.8-14 and 4.8-15, respectively. The X/Q values at both distances demonstrated that the highest X/Q values were estimated by the XOQDOQ model for the 16 wind direction sectors.

Estimates of X/Q (undecayed and undepleted; depleted for radioiodines) and D/Q are provided at various distances from a quarter mile to 50 miles from the facility are presented in Table 4.8-16 through Table 4.8-19. Finally, the maximum X/Q and D/Q impacts at the special location receptors of the site boundary, ~~and~~ the nearest residence, and the MEI overall peak (i.e., the maximum X/Q) are reported in Table 4.8-20.

Radiation Dose Modeling

This subsection describes the methodology, data, and results of the evaluation of radiation doses to members of the public. GASPAR II is the computer model used to evaluate doses to members of the public from gaseous effluents released from normal operations at the facility. The annual consumption and usage rates for the average individual and the MEI were taken from Regulatory Guide 1.109 Tables E-4 and E-5, respectively. While not directly applicable to non-power reactors, Regulatory Guide 1.109 provides receptor parameters that would be applicable to non-power reactors. GASPAR II uses the maximum rates in calculating individual doses and the average rates in calculating population doses.

NUREG-1537, Part 1 outlines the following for establishing the radioactive dose:

- Physical layout of the site, describing or showing the location of radioactive materials that are expected to be present.
- Characteristics of radiation sources and expected radioactive effluents (i.e., radioactive liquid, gaseous, and solid wastes).
- Baseline radiation levels at the site. Measured radiation dose rates, airborne radioactivity concentrations, and waterborne radioactivity concentrations at specific current locations where environmental radiological monitoring data exist.
- Calculated radiation dose rates, annual averaged airborne radioactivity concentrations, and annual averaged waterborne radioactivity concentrations at the site boundary, including a description of the methodology and assumptions.
- Calculated annual total effective dose equivalent to a maximally exposed member of the public in the unrestricted area, including a description of the methodology and assumptions.
- Calculated annual dose to the maximally exposed worker, including a description of the methodology and assumption.
- Description of mitigation measures that reduce or minimize public and occupational exposures to radioactive material.

External radiation doses were not estimated using site-specific dose models as measures would be in place to limit occupational dose to below regulatory limits. The distance from the reactor and waste

operations will be such that external doses to the public would be very low and likely not detectable above background. However, for estimates of the total dose at the site boundary, to the MEI, and the nearest resident, a 1 mrem/yr external dose was conservatively assumed. Additionally, there are not anticipated radioactive liquid effluents from the facility. Therefore, only the inhalation pathway was included in calculating the radiation dose from the routine emissions from the facility. Inputs to the GASPAR II model are presented in Table 4.8-21.

The GASPAR II computer program was used to calculate doses from gaseous pathways to offsite receptors from normal operations at the facility. This program, described in NUREG-4653, GASPAR II – Technical Reference and User Guide, implements the radiological exposure models described in Regulatory Guide 1.109 for radioactivity releases in gaseous effluents. Routine dilution and deposition estimates were calculated using the XOQDOQ modeling program, which is the dispersion model for evaluating routine releases recommended by NRC in NUREG-2919, XOQDOQ: Computer Program for the Meteorological Evaluation of Routine Effluent Releases at Nuclear Power Stations. Site-specific, validated meteorological data for calendar years 2016—2020 were used as input to the model. The site-specific dilution and deposition estimates were used by the GASPAR II computer program to calculate radiation doses.

Impacts to Members of the Public

This subsection summarizes the impacts to individuals from radioactive effluents released in the course of normal operations. Impacts to the public are evaluated by comparing estimated dose to regulatory acceptance criteria.

Calculated doses at the site boundary (maximum dose location), at the MEI location, and at the nearest resident ~~(the MEI)~~ from gaseous effluent are shown in Table 4.8-22. In accordance with the guidance provided in Regulatory Guide 4.20, *Constraints on Releases of Airborne Radioactive Materials to the Environment for Licensees other than Power Reactors*, the total effective dose rates at these points are compared to the 10 mrem/yr constraint on airborne emissions of radioactive material to the environment as described in 10 CFR 20.1101(d). As the maximum estimated dose rate to the MEI of ~~0.19~~1.4 mrem/yr is less than 10 mrem/yr, the criterion is met.

As noted previously, the external dose rate to the MEI from reactor operations is assumed to be 1 mrem/yr. Combining the assumed external dose rate with the total estimated dose from gaseous emissions of ~~0.19~~1.4 mrem/yr for the MEI, the total dose would be approximately ~~1.2~~2.4 mrem/yr. For comparison, the average background dose in ~~the United States~~Tennessee from natural sources is approximately ~~311~~ 564 mrem/yr.

Because the doses to members of the public from normal operations are calculated to be within the regulatory limits for protection of the MEI, the radiological impacts to members of the public from normal operations at the facility would be SMALL.

4.8.2.4.2 Liquid Effluents

As described in Section 4.8.2.2.2, the facility is not expected to generate radioactive liquid waste for effluent release. As a result, there are no expected liquid effluent pathways that contribute to waterborne radioactivity concentrations. Because there are no discharges of radioactive liquid effluent at the site, the annual averaged waterborne radioactivity concentration is not expected to be greater than the baseline concentration. Therefore, the public dose impacts from liquid effluents would be SMALL.

4.8.2.4.3 Direct Dose

From Section 4.8.2.2.3, sources of radiation inside the facility include the operating reactor, waste staging/shipping, and spent fuel storage. The areas identified to have fixed sources of radiation would be designed with appropriate shielding to meet the 10 percent of 10 CFR 20.1301 limits at the outer wall of the facility. However, due to current uncertainty in source terms, the direct dose from site-specific sources have not been modeled.

The direct dose to a member of the public at the EAB would be due to gamma radiation penetrating the walls of the facility or radiation reflecting in the air, known as "shine." While not specifically modeled, due to site shielding design, the direct dose outside of the buildings would be small and the dose would substantially decrease with increasing distance from the sources. Because the nearest site boundary is located at an appreciable distance from the discussed fixed sources, the direct dose is negligible at the site boundary. Therefore, the public dose impacts from direct exposure sources would be SMALL.

4.8.2.5 Annual Dose to Maximally Exposed Worker

Occupational radiation exposures to workers from all sources at the facility would not result in a dose greater than the occupational dose limits provided in 10 CFR Part 20 limits, Subpart C~~ and provided in Table 4.8-27~~. Therefore, the dose impacts to workers from direct exposure sources would be SMALL.

4.8.2.6 Radiation Exposure Mitigation Measures

Occupational and public exposures due to operations at the site would be maintained ALARA by limiting exposure times, maximizing distances to sources, and/or utilizing shielding when appropriate. This exposure minimization goal is met through both engineered and administrative controls. The following subsections discuss each individually.

4.8.2.6.1 Engineered Controls

The facility is expected to utilize the following engineered controls to minimize radiation exposure to the public and workers:

- Radiation source identification and controls
- Shielding around radiation sources
- Ventilation control
- Access control to radiation areas
- Remote operation
- Physically separated systems that prevent cross-contamination

4.8.2.6.2 Administrative Controls

To minimize radiation exposure to the public and workers, the facility would utilize administrative controls, which consist of written procedures, policies, and employee training in the following subject areas:

- Radiation safety
- Dose monitoring
- Contamination controls
- Radioactive waste minimization
- Responsibilities for radiological environmental stewardship
- Employee recognition for efforts to improve radiological conditions

4.8.3 Radiological Monitoring

Radiological monitoring includes effluent monitoring and environmental monitoring. Impacts to public health from implementing monitoring described in the following sections would be SMALL. The information gained from monitoring helps to control radiological impacts and ensures they also remain SMALL.

4.8.3.1 Radiological Effluent Monitoring

The NRC requires that operators of nuclear plants and fuel-cycle facilities monitor and report on releases of radioactive effluents. For nuclear plants, the monitoring and reporting system is specified in the Radiological Effluent Technical Specifications. Radiological Effluent Technical Specifications requires the licensee to monitor effluent releases at every significant release point at the facility. Effluent monitoring consists of continuous measurements of some effluent streams; periodic measurement of radioactive particles trapped on filters, and measurement of samples from effluents released in batches. Regulatory Guide 4.1, *Radiological Environmental Monitoring for Nuclear Power Plants*, addresses the environmental monitoring program. This regulatory guide discusses principles and concepts important to environmental monitoring at nuclear power plants. The guide addresses the need for preoperational and background characterization of radioactivity. It also addresses offsite monitoring, including those exposure pathways that are important to a site. The guide defines exposure pathways, the program scope of sampling media and sampling frequency, and the methods of comparing environmental measurements to effluent releases in the annual environmental report. Regulatory Guide 4.1 refers to NUREG-1301, "Offsite Dose Calculation Manual Guidance: Standard Radiological Effluent Controls for Pressurized Water Reactors" for additional guidance on the effluent and environmental monitoring. Both Regulatory Guide 4.1 and NUREG-1301 are written for nuclear power plants rather than test reactors.

There are similarities in airborne releases of radioactivity such that the guidance in Regulatory Guide 4.1 and NUREG-1301 are considered generally relevant for developing the operational radiological environmental monitoring program (REMP) for the Hermes reactor with the exception of the need for preoperational monitoring (See PSAR Section 11.1.7) and the location of monitors (See Section 4.8.3.2.2). A REMP would be established to identify and quantify principal radionuclides in effluents (Regulatory Guide 4.1). This can be used to verify that the facility is performing as expected and within its design parameters, so that doses to individual members of the public remain within the limits established in 10 CFR 20.1301 and dose due to airborne emissions meet the ALARA requirements of 10 CFR 20.1101(d) as indicated in Regulatory Guide 4.20, *Constraint on Releases of Airborne Radioactive Materials to the Environment for Licensees other than Power Reactors*.

Significant release pathways for radioactive material from the facility would be included in the REMP. Gaseous effluent monitoring would be conducted at locations both on site and at locations around the site boundary during operations and final decommissioning and dispositioning of the Hermes reactor. As discussed in PSAR Section 11.1.7, a description of the environmental monitoring program for the facility will be provided with the application for an Operating License consistent with 10 CFR 50.34(b)(3).

4.8.3.1.1 Gaseous Effluent Monitoring

Gaseous effluents released from the facility would be released primarily through the heat rejection stack as well as the Reactor Building ventilation system exhaust. Gaseous effluents from the heat rejection stack are monitored prior to release. Gaseous effluents from the Reactor Building ventilation system exhaust ~~where they would~~ pass through a HEPA filter and are monitored prior to release. There would be sampling provisions to routinely collect grab samples and analyze gas, particulate, iodine, and tritium samples from the exhaust in the vent stack in order to identify radionuclides, identify relative

concentrations of radionuclides in the airborne effluent, and quantify radionuclide release. The airborne effluent exhaust from the ventilation system exhaust is not expected to contain significant quantities of radioactive noble gases. No significant gaseous radioactive effluents are expected to be discharged through the SFCS~~,~~ or the DHRS~~, or the PHRS~~.

The TMS would capture tritium from gas streams in the facility. Molecular sieve desiccants would capture tritium from the ~~intermediate loop cover gas and from the~~ reactor cell atmosphere. Zirconium-alloy metal hydride would capture tritium; separating it from argon in the reactor inert cover gas. Collection and disposition of tritium by the TMS would reduce the amount of tritium released to the environment ensuring it is below the limits established in 10 CFR 20.

4.8.3.1.2 Liquid Effluent Monitoring

The facility would release no radioactive liquid effluent. As such, there are no defined liquid effluent pathways from the facility and no requirement for radiation monitoring of liquid effluent release pathways.

4.8.3.2 Radiological Environmental Monitoring

The requirement to have a radiological environmental monitoring program is documented in 10 CFR 20.1302. As provided in PSAR Section 11.1.7, the Hermes site is located on a former DOE nuclear facility site and the radiological conditions in the area are well characterized and establish a baseline for the site. The baseline would later be used to ensure that the facilities impact on the environment remains minimal. The NRC requires nuclear plants to submit a report each year on the results of their monitoring programs.

The environmental monitoring system is covered under the REMP. The REMP would require sample airs be taken at various locations in the vicinity of the facility to determine if releases are detectable in the environment off site. The environmental monitoring system is covered under the REMP. As provided in NUREG 1301, air monitoring measurements are typically made at five stations: three near the plant boundary in the direction of most likely wind transport; one in the vicinity of a community likely to have the greatest chance of exposure; and one at a control location 9.3 to 18.6 miles in the upwind direction of prevailing winds. Radioiodine is measured weekly and gross beta activity of particulates captured on filters is measured quarterly. Analyses to identify gamma-emitting radionuclides are done on composite samples weekly (Reference 5).

Although Regulatory Guide 4.1 and NUREG 1301 are written for conventional LWR nuclear power plants, due to the similarities between airborne releases of radioactivity from those nuclear power plants and those potentially released from the facility, the guidance provided in Regulatory Guide 4.1 and NUREG 1301 will be considered when developing radiological environmental monitoring specifications for the facility as described in PSAR Chapter 11. Specifically, guidance provided in Figure 1 of Regulatory Guide 4.1 and Table 3.12-1 of NUREG 1301 will be considered when determining which exposure pathways to sample, sample locations, types of samples, and sample frequencies for the facility. Considering this guidance, the following radiation exposure pathways would be considered for monitoring under the facility REMP:

- Direct radiation exposure pathway monitored using passive dosimeters [e.g., thermoluminescent dosimeters (TLDs)]
- Airborne exposure pathway monitored using continuous air samples
- Ingestion exposure pathway (monitored only if triggered)
- Waterborne exposure pathway (if radioactive effluent needs are later identified or if triggered as a result of an unplanned release)

Table 4.8-1: Summary of Major Chemical Inventory and Quantity

Chemical	Approximate Bounding Inventory (pounds)	Chemical Group	Storage Location
Flibe	40,000	Group 9 - Solids	In-process - Reactor Building
~~Nitrate salts (NaNO3, KNO3)~~	~~1,200,000~~	~~Group 9 - Solids~~	~~In-process - Reactor Building Storage - Auxiliary Systems Building or Maintenance and Storage Building~~

Table 4.8-2: Potential Occupational Hazards

Construction and Decommissioning		
Physical	**Electrical**	**Chemical**
Heavy construction equipment Working from heights Excavation and trenching Heavy lifts Demolition Slips and falls Hot work	Power connects/disconnects Generators General wiring Power tools Underground wiring	Oil and fuels Decontamination fluids Cleaners Paints/solvents Natural gas
Operations		
Physical	**Electrical**	**Chemical**
Ergonomics Slips and falls Lifting Loading and unloading Cranes and hoists Elevated work surfaces Stairs	General electrical Wiring Electronics	Flibe ~~Nitrate salts~~ Cleaners Oils and fuels

Table 4.8-3: Annual Total Effective Dose Equivalent to the Public at Bounding Dose Receptors

Dose Receptor	Annual TEDE	Annual TEDE Dose Constraint
Gaseous Effluents		
Site Boundary	0.57 ~~0.28~~ mrem	10 mrem[a] (0.1 mSv)
MEI in an unrestricted area	1.4 mrem	
~~MEI/~~Nearest Full-Time Resident[c][d]	1.2 ~~0.19~~ mrem	
Total Dose (Combined External Dose[e] and Gaseous Effluent)		
Site Boundary	1.6 ~~1.3~~ mrem	100 mrem[b~~a~~] (1.0 mSv)
MEI in an unrestricted area	2.4 mrem	
~~MEI/~~Nearest Full-Time Resident[c][d]	2.2 ~~1.2~~ mrem	

[a] Dose constraint based on 10 CFR 20.1101(d) for airborne emissions
[b] Dose constraint based on 10 CFR 20.1301(a)(1) for licensed operations
[c] Includes ingestion of meat and vegetable produced at the analytical nearest resident location
[d] Dose is modeled at the distance of the analytical nearest resident but in the direction of the maximum deposition
[e] The external dose was not modeled and is conservatively assumed to be 1 mrem/yr (Section 4.8.2.4.1)
~~Note: Table values do not include contributions from tritium~~

Table 4.8-4: Classification of Atmospheric Stability

Stability Classification	Pasquill Stability Category	Ambient Temperature Change with Height (°C/100m)
Extremely unstable	A	$\Delta T \leq -1.9$
Moderately unstable	B	$-1.9 < \Delta T \leq -1.7$
Slightly unstable	C	$-1.7 < \Delta T \leq -1.5$
Neutral	D	$-1.5 < \Delta T \leq -0.5$
Slightly stable	E	$-0.5 < \Delta T \leq 1.5$
Moderately stable	F	$1.5 < \Delta T \leq 4.0$
Extremely stable	G	$\Delta T > 4.0$
Note: Based on Table 2.2 in Regulatory Guide 1.23.		

Table 4.8-13: List of Inputs Used in the XOQDOQ Modeling

XODOQ Input Variables	Value
Wind Sensor Height (PLEV)	30 m
Conversion Correction Factor (UCOR)	-100 [1]
Lower-T Sensor Height	15 m
Upper-T sensor Height	30 m
Type of Release	Elevated
Vent Average Velocity (EXIT)	~~70.9~~10.6 m/s
Vent Inside Diameter (DIAMTR)	~~0.96~~ m
Vent Release Height (HSTACK)	30.5 m
Containment Building Height (HBLDG)	27 m
Building Min. Cross Sectional Area (CRSEC)	862 m^2
Wind Height (SLEV)	30 m
Vent Heat Emission Rate (HEATR)[2]	99,999 cal/s

[1] UCOR set to -100 which triggers no correction to wind speed classes
[2] HEATR was calculated from the buoyancy equation solving for net heat release, q_s (cal/s)

$$q_s = \frac{(g\,\frac{v_s\,d^2}{4})}{3.7 \times 10^{-5}}\left[\frac{T - T_a}{T}\right]$$

where g is gravity, T stack temperature (323.2 K), v_s exit velocity (70.9 m/s), d stack diameter (0.91 m) and Ta ambient temperature (287.8 K). This resulted in a value 4.29E+05 cal/s. However, HEATR was coded to only accept a value with a maximum of 5 integers, hence the use of 99,999 cal/s.

Table 4.8-14: Long-Term Average X/Q Values Estimated from XOQDOQ at the EAB

EAB Sector	Undepleted	2-Day Decay	8-Day Decay	Deposition
S	4.28E-07	4.28E-07	4.27E-07	~~2.62~~2.79E-09
SSW	4.97E-07	4.97E-07	4.97E-07	3.29E-09
SW	8.67E-07	8.66E-07	8.65E-07	6.47E-09
WSW	1.23E-06	1.23E-06	1.22E-06	7.67E-09
W	4.13E-07	4.13E-07	4.13E-07	2.00E-09
WNW	2.79E-07	2.79E-07	2.79E-07	1.28E-09
NW	1.95E-07	1.95E-07	1.95E-07	1.11E-09
NNW	2.49E-07	2.49E-07	2.49E-07	1.47E-09
N	4.84E-07	4.83E-07	4.83E-07	3.70E-09
NNE	1.34E-06	1.34E-06	1.34E-06	1.04E-08
NE	2.22E-06	2.22E-06	2.22E-06	1.39E-08
ENE	1.27E-06	1.27E-06	1.27E-06	7.35E-09
E	1.24E-06	1.24E-06	1.24E-06	6.80E-09
ESE	1.26E-06	1.26E-06	1.26E-06	1.06E-08
SE	1.29E-06	1.29E-06	1.28E-06	1.62E-08
SSE	6.47E-07	6.46E-07	6.44E-07	3.92E-09
Note: EAB was set at 0.16 miles (250 meters)				

Table 4.8-15: Long-Term Average X/Q Values Estimated from XOQDOQ at the LPZ

LPZ Sector	Undepleted	2-Day Decay	8-Day Decay	Deposition
S	3.47E-07	3.46E-07	3.44E-07	3.16E-09
SSW	3.79E-07	3.77E-07	3.73E-07	3.99E-09
SW	4.52E-07	4.50E-07	4.46E-07	7.20E-09
WSW	6.63E-07	6.62E-07	6.55E-07	8.45E-09
W	2.40E-07	2.39E-07	2.37E-07	2.79E-09
WNW	1.97E-07	1.96E-07	1.95E-07	1.80E-09
NW	1.57E-07	1.56E-07	1.55E-07	1.55E-09
NNW	2.04E-07	2.03E-07	2.02E-07	2.02E-09
N	4.07E-07	4.06E-07	4.02E-07	4.76E-09
NNE	8.27E-07	8.24E-07	8.16E-07	1.24E-08
NE	1.16E-06	1.16E-06	1.14E-06	1.62E-08
ENE	5.90E-07	5.89E-07	5.82E-07	9.09E-09
E	7.30E-07	7.29E-07	7.19E-07	~~8.23~~8.66E-09
ESE	6.41E-07	6.40E-07	6.30E-07	9.75E-09
SE	2.74E-06	2.73E-06	2.73E-06	1.34E-08
SSE	6.71E-06	6.68E-06	6.68E-06	9.04E-09

Table 4.8-18: Annual Average X/Q for 8 Day Decay, Depleted for Specified Distances at Each Sector (Page 1 of 3)

	~~Distance (miles)~~										
~~Sector~~	~~0.25~~	~~0.5~~	~~0.75~~	~~1~~	~~1.5~~	~~2~~	~~2.5~~	~~3~~	~~3.5~~	~~4~~	~~4.5~~
~~S~~	~~6.84E-07~~	~~3.76E-07~~	~~2.35E-07~~	~~1.57E-07~~	~~9.84E-08~~	~~1.17E-07~~	~~1.27E-07~~	~~1.32E-07~~	~~4.33E-07~~	~~3.61E-07~~	~~2.88E-07~~
~~SSW~~	~~8.97E-07~~	~~4.22E-07~~	~~4.28E-07~~	~~6.18E-07~~	~~1.27E-06~~	~~5.38E-07~~	~~2.79E-07~~	~~1.63E-07~~	~~1.79E-07~~	~~1.93E-07~~	~~2.06E-07~~
~~SW~~	~~1.22E-06~~	~~5.05E-07~~	~~3.74E-07~~	~~2.94E-07~~	~~2.58E-07~~	~~2.74E-07~~	~~2.79E-07~~	~~2.76E-07~~	~~3.01E-07~~	~~3.26E-07~~	~~3.48E-07~~
~~WSW~~	~~1.46E-06~~	~~7.16E-07~~	~~1.06E-06~~	~~1.51E-06~~	~~3.41E-06~~	~~1.31E-06~~	~~6.00E-07~~	~~3.18E-07~~	~~3.62E-07~~	~~4.03E-07~~	~~4.21E-07~~
~~W~~	~~5.95E-07~~	~~2.64E-07~~	~~2.41E-07~~	~~2.32E-07~~	~~2.78E-07~~	~~3.25E-07~~	~~3.59E-07~~	~~3.85E-07~~	~~3.74E-07~~	~~3.56E-07~~	~~3.28E-07~~
~~WNW~~	~~4.55E-07~~	~~2.16E-07~~	~~1.71E-07~~	~~1.53E-07~~	~~1.48E-07~~	~~2.35E-07~~	~~3.24E-07~~	~~4.20E-07~~	~~2.26E-07~~	~~1.35E-07~~	~~8.53E-08~~
~~NW~~	~~3.62E-07~~	~~1.73E-07~~	~~1.62E-07~~	~~1.92E-07~~	~~2.98E-07~~	~~1.73E-07~~	~~1.10E-07~~	~~7.41E-08~~	~~7.04E-08~~	~~6.66E-08~~	~~6.30E-08~~
~~NNW~~	~~5.27E-07~~	~~2.31E-07~~	~~1.86E-07~~	~~2.16E-07~~	~~3.17E-07~~	~~2.93E-07~~	~~2.60E-07~~	~~2.30E-07~~	~~1.79E-07~~	~~1.42E-07~~	~~1.16E-07~~
~~N~~	~~1.01E-06~~	~~4.58E-07~~	~~2.91E-07~~	~~2.16E-07~~	~~1.87E-07~~	~~3.02E-07~~	~~4.33E-07~~	~~5.77E-07~~	~~5.49E-07~~	~~5.13E-07~~	~~4.71E-07~~
~~NNE~~	~~2.18E-06~~	~~9.25E-07~~	~~6.41E-07~~	~~4.82E-07~~	~~4.05E-07~~	~~4.48E-07~~	~~4.80E-07~~	~~5.01E-07~~	~~4.36E-07~~	~~3.83E-07~~	~~3.40E-07~~
~~NE~~	~~2.83E-06~~	~~1.26E-06~~	~~1.04E-06~~	~~8.01E-07~~	~~6.36E-07~~	~~4.09E-07~~	~~2.84E-07~~	~~2.09E-07~~	~~1.88E-07~~	~~1.71E-07~~	~~1.57E-07~~
~~ENE~~	~~1.68E-06~~	~~6.51E-07~~	~~6.27E-07~~	~~6.01E-07~~	~~6.84E-07~~	~~4.52E-07~~	~~3.23E-07~~	~~2.44E-07~~	~~2.42E-07~~	~~2.38E-07~~	~~2.32E-07~~
~~E~~	~~1.40E-06~~	~~7.69E-07~~	~~1.40E-06~~	~~2.18E-06~~	~~2.12E-06~~	~~9.01E-07~~	~~3.10E-07~~	~~1.25E-07~~	~~1.05E-07~~	~~9.00E-08~~	~~7.85E-08~~
~~ESE~~	~~1.28E-06~~	~~6.75E-07~~	~~6.94E-07~~	~~6.02E-07~~	~~5.35E-07~~	~~6.22E-07~~	~~5.84E-07~~	~~4.30E-07~~	~~3.02E-07~~	~~1.97E-07~~	~~1.20E-07~~
~~SE~~	~~1.96E-06~~	~~2.78E-06~~	~~2.11E-06~~	~~1.40E-06~~	~~7.69E-07~~	~~6.43E-07~~	~~5.06E-07~~	~~3.74E-07~~	~~2.75E-07~~	~~2.11E-07~~	~~1.68E-07~~
~~SSE~~	~~1.46E-06~~	~~6.91E-06~~	~~2.21E-06~~	~~7.78E-07~~	~~1.80E-07~~	~~4.19E-07~~	~~5.29E-07~~	~~3.79E-07~~	~~2.74E-07~~	~~2.09E-07~~	~~1.52E-07~~

Sector	Distance (miles)										
	0.25	0.5	0.75	1	1.5	2	2.5	3	3.5	4	4.5
S	6.84E-07	3.76E-07	2.35E-07	1.57E-07	9.84E-08	1.17E-07	1.27E-07	1.32E-07	4.33E-07	3.61E-07	2.88E-07
SSW	8.97E-07	4.22E-07	4.28E-07	6.18E-07	1.27E-06	5.38E-07	2.79E-07	1.63E-07	1.79E-07	1.93E-07	2.06E-07
SW	1.22E-06	5.05E-07	3.74E-07	2.94E-07	2.58E-07	2.74E-07	2.79E-07	2.76E-07	3.01E-07	3.26E-07	3.48E-07
WSW	1.46E-06	7.16E-07	1.06E-06	1.51E-06	3.41E-06	1.31E-06	6.00E-07	3.18E-07	3.62E-07	4.03E-07	4.21E-07
W	5.95E-07	2.64E-07	2.41E-07	2.32E-07	2.78E-07	3.25E-07	3.59E-07	3.85E-07	3.74E-07	3.56E-07	3.28E-07
WNW	4.55E-07	2.16E-07	1.71E-07	1.53E-07	1.48E-07	2.35E-07	3.24E-07	4.20E-07	2.26E-07	1.35E-07	8.53E-08
NW	3.62E-07	1.73E-07	1.62E-07	1.92E-07	2.98E-07	1.73E-07	1.10E-07	7.41E-08	7.04E-08	6.66E-08	6.30E-08
NNW	5.27E-07	2.31E-07	1.86E-07	2.16E-07	3.17E-07	2.93E-07	2.60E-07	2.30E-07	1.79E-07	1.42E-07	1.16E-07
N	1.01E-06	4.58E-07	2.91E-07	2.16E-07	1.87E-07	3.02E-07	4.33E-07	5.77E-07	5.49E-07	5.13E-07	4.71E-07
NNE	2.18E-06	9.25E-07	6.41E-07	4.82E-07	4.05E-07	4.48E-07	4.80E-07	5.01E-07	4.34E-07	3.81E-07	3.39E-07
NE	2.83E-06	1.26E-06	1.04E-06	8.01E-07	6.36E-07	4.09E-07	2.84E-07	2.09E-07	1.88E-07	1.71E-07	1.57E-07
ENE	1.68E-06	6.51E-07	6.27E-07	6.01E-07	6.84E-07	4.52E-07	3.23E-07	2.44E-07	2.42E-07	2.38E-07	2.31E-07
E	1.40E-06	7.69E-07	1.40E-06	2.18E-06	2.12E-06	9.01E-07	3.10E-07	1.25E-07	1.05E-07	9.00E-08	7.85E-08
ESE	1.28E-06	6.75E-07	6.94E-07	6.02E-07	5.35E-07	6.22E-07	5.84E-07	4.30E-07	3.02E-07	1.97E-07	1.20E-07
SE	1.96E-06	2.78E-06	2.11E-06	1.40E-06	7.69E-07	6.43E-07	5.05E-07	3.74E-07	2.75E-07	2.11E-07	1.68E-07
SSE	1.46E-06	6.91E-06	2.21E-06	7.78E-07	1.80E-07	4.19E-07	5.29E-07	3.79E-07	2.74E-07	2.09E-07	1.52E-07

Table 4.8-18: Annual Average X/Q for 8 Day Decay, Depleted for Specified Distances at Each Sector (Page 2 of 3)

	~~Distance (miles)~~										
~~Sector~~	~~5~~	~~7.5~~	~~10~~	~~15~~	~~20~~	~~25~~	~~30~~	~~35~~	~~40~~	~~45~~	~~50~~
~~S~~	~~2.35E-07~~	~~1.16E-07~~	~~7.24E-08~~	~~3.91E-08~~	~~2.52E-08~~	~~1.78E-08~~	~~1.34E-08~~	~~1.05E-08~~	~~8.45E-09~~	~~6.98E-09~~	~~5.86E-09~~
~~SSW~~	~~2.21E-07~~	~~1.31E-07~~	~~9.11E-08~~	~~6.55E-08~~	~~4.23E-08~~	~~3.00E-08~~	~~2.26E-08~~	~~1.77E-08~~	~~1.43E-08~~	~~1.19E-08~~	~~9.98E-09~~
~~SW~~	~~3.62E-07~~	~~1.65E-07~~	~~9.71E-08~~	~~8.95E-08~~	~~5.78E-08~~	~~4.10E-08~~	~~3.09E-08~~	~~2.43E-08~~	~~1.96E-08~~	~~1.61E-08~~	~~1.36E-08~~
~~WSW~~	~~4.09E-07~~	~~2.20E-07~~	~~1.39E-07~~	~~7.55E-08~~	~~4.81E-08~~	~~3.47E-08~~	~~2.61E-08~~	~~2.05E-08~~	~~1.60E-08~~	~~1.37E-08~~	~~1.15E-08~~
~~W~~	~~2.97E-07~~	~~1.27E-07~~	~~6.60E-08~~	~~5.46E-08~~	~~3.48E-08~~	~~2.43E-08~~	~~1.74E-08~~	~~1.46E-08~~	~~1.21E-08~~	~~1.00E-08~~	~~8.11E-09~~
~~WNW~~	~~5.70E-08~~	~~5.48E-08~~	~~5.19E-08~~	~~2.76E-08~~	~~2.52E-08~~	~~1.77E-08~~	~~1.34E-08~~	~~1.07E-08~~	~~8.62E-09~~	~~7.11E-09~~	~~5.97E-09~~
~~NW~~	~~5.98E-08~~	~~6.63E-08~~	~~6.66E-08~~	~~2.19E-08~~	~~2.40E-08~~	~~1.80E-08~~	~~1.17E-08~~	~~1.02E-08~~	~~8.24E-09~~	~~6.80E-09~~	~~5.72E-09~~
~~NNW~~	~~9.66E-08~~	~~1.32E-07~~	~~9.66E-08~~	~~2.25E-08~~	~~2.64E-08~~	~~1.81E-08~~	~~1.48E-08~~	~~1.44E-08~~	~~1.17E-08~~	~~9.66E-09~~	~~8.14E-09~~
~~N~~	~~4.03E-07~~	~~1.68E-07~~	~~8.15E-08~~	~~5.81E-08~~	~~4.28E-08~~	~~3.04E-08~~	~~2.28E-08~~	~~1.68E-08~~	~~1.47E-08~~	~~1.19E-08~~	~~9.92E-09~~
~~NNE~~	~~3.07E-07~~	~~1.42E-07~~	~~8.22E-08~~	~~5.83E-08~~	~~7.86E-08~~	~~5.60E-08~~	~~4.23E-08~~	~~3.25E-08~~	~~2.38E-08~~	~~1.86E-08~~	~~1.16E-08~~
~~NE~~	~~1.45E-07~~	~~8.46E-08~~	~~5.75E-08~~	~~7.39E-08~~	~~4.75E-08~~	~~2.88E-08~~	~~1.72E-08~~	~~1.49E-08~~	~~1.31E-08~~	~~1.33E-08~~	~~1.07E-08~~
~~ENE~~	~~2.19E-07~~	~~1.23E-07~~	~~7.73E-08~~	~~3.29E-08~~	~~2.65E-08~~	~~1.88E-08~~	~~1.41E-08~~	~~1.11E-08~~	~~7.16E-09~~	~~7.37E-09~~	~~6.21E-09~~
~~E~~	~~6.94E-08~~	~~7.62E-08~~	~~5.11E-08~~	~~2.71E-08~~	~~1.73E-08~~	~~1.22E-08~~	~~9.11E-09~~	~~7.10E-09~~	~~5.71E-09~~	~~4.70E-09~~	~~3.94E-09~~
~~ESE~~	~~7.40E-08~~	~~5.96E-08~~	~~4.68E-08~~	~~2.51E-08~~	~~1.60E-08~~	~~1.13E-08~~	~~8.46E-09~~	~~6.60E-09~~	~~5.31E-09~~	~~4.38E-09~~	~~3.60E-09~~
~~SE~~	~~1.38E-07~~	~~6.85E-08~~	~~4.23E-08~~	~~2.27E-08~~	~~1.45E-08~~	~~1.03E-08~~	~~7.69E-09~~	~~6.01E-09~~	~~4.84E-09~~	~~3.99E-09~~	~~3.35E-09~~
~~SSE~~	~~1.06E-07~~	~~6.75E-08~~	~~4.20E-08~~	~~2.25E-08~~	~~1.44E-08~~	~~1.01E-08~~	~~7.56E-09~~	~~5.89E-09~~	~~4.74E-09~~	~~3.90E-09~~	~~3.27E-09~~

Sector	Distance (miles)										
	5	7.5	10	15	20	25	30	35	40	45	50
S	2.35E-07	1.16E-07	7.24E-08	3.91E-08	2.52E-08	1.78E-08	1.34E-08	1.05E-08	8.45E-09	6.98E-09	5.86E-09
SSW	2.21E-07	1.31E-07	9.11E-08	6.55E-08	4.23E-08	3.00E-08	2.26E-08	1.77E-08	1.43E-08	1.19E-08	9.98E-09
SW	3.62E-07	1.65E-07	9.71E-08	8.95E-08	5.79E-08	4.10E-08	3.09E-08	2.43E-08	1.96E-08	1.61E-08	1.36E-08
WSW	4.09E-07	2.20E-07	1.39E-07	7.55E-08	4.81E-08	3.47E-08	2.61E-08	2.05E-08	1.60E-08	1.37E-08	1.15E-08
W	2.97E-07	1.27E-07	6.60E-08	5.46E-08	3.48E-08	2.43E-08	1.74E-08	1.46E-08	1.21E-08	1.00E-08	8.11E-09
WNW	5.70E-08	5.48E-08	5.19E-08	2.76E-08	2.52E-08	1.77E-08	1.34E-08	1.07E-08	8.62E-09	7.11E-09	5.97E-09
NW	5.98E-08	6.65E-08	6.66E-08	2.19E-08	2.40E-08	1.60E-08	1.17E-08	1.02E-08	8.24E-09	6.80E-09	5.72E-09
NNW	9.66E-08	1.32E-07	9.65E-08	2.25E-08	2.64E-08	1.81E-08	1.48E-08	1.44E-08	1.17E-08	9.66E-09	8.14E-09
N	4.03E-07	1.68E-07	8.15E-08	5.81E-08	4.28E-08	3.04E-08	2.28E-08	1.68E-08	1.47E-08	1.19E-08	9.92E-09
NNE	3.05E-07	1.42E-07	8.22E-08	5.82E-08	7.83E-08	5.58E-08	4.22E-08	3.23E-08	2.37E-08	1.85E-08	1.16E-08
NE	1.45E-07	8.46E-08	5.75E-08	7.38E-08	4.75E-08	2.88E-08	1.72E-08	1.49E-08	1.31E-08	1.33E-08	1.07E-08
ENE	2.19E-07	1.23E-07	7.73E-08	3.29E-08	2.65E-08	1.88E-08	1.41E-08	1.10E-08	7.15E-09	7.37E-09	6.21E-09
E	6.94E-08	7.62E-08	5.11E-08	2.71E-08	1.73E-08	1.22E-08	9.11E-09	7.10E-09	5.71E-09	4.70E-09	3.94E-09
ESE	7.40E-08	5.96E-08	4.68E-08	2.51E-08	1.60E-08	1.13E-08	8.45E-09	6.60E-09	5.31E-09	4.38E-09	3.60E-09
SE	1.38E-07	6.85E-08	4.23E-08	2.27E-08	1.45E-08	1.03E-08	7.69E-09	6.01E-09	4.84E-09	3.99E-09	3.35E-09
SSE	1.06E-07	6.75E-08	4.20E-08	2.25E-08	1.44E-08	1.01E-08	7.56E-09	5.89E-09	4.74E-09	3.90E-09	3.26E-09

Table 4.8-18: Annual Average X/Q for 8 Day Decay, Depleted for Specified Distances at Each Sector (Page 3 of 3)

	~~Distance (miles)~~									
~~Sector~~	~~0.5-1~~	~~1-2~~	~~2-3~~	~~3-4~~	~~4-5~~	~~5-10~~	~~10-20~~	~~20-30~~	~~30-40~~	~~40-50~~
~~S~~	~~2.32E-07~~	~~1.20E-07~~	~~1.26E-07~~	~~3.19E-07~~	~~2.90E-07~~	~~1.23E-07~~	~~4.03E-08~~	~~1.80E-08~~	~~1.05E-08~~	~~7.00E-09~~
~~SSW~~	~~5.11E-07~~	~~8.00E-07~~	~~3.01E-07~~	~~1.80E-07~~	~~2.08E-07~~	~~1.33E-07~~	~~6.09E-08~~	~~3.03E-08~~	~~1.78E-08~~	~~1.19E-08~~
~~SW~~	~~3.67E-07~~	~~2.73E-07~~	~~2.77E-07~~	~~3.03E-07~~	~~3.47E-07~~	~~1.79E-07~~	~~7.71E-08~~	~~4.15E-08~~	~~2.44E-08~~	~~1.62E-08~~
~~WSW~~	~~1.18E-06~~	~~2.06E-06~~	~~6.77E-07~~	~~3.65E-07~~	~~4.11E-07~~	~~2.26E-07~~	~~7.75E-08~~	~~3.48E-08~~	~~2.04E-08~~	~~1.36E-08~~
~~W~~	~~2.42E-07~~	~~2.89E-07~~	~~3.60E-07~~	~~3.70E-07~~	~~3.25E-07~~	~~1.38E-07~~	~~4.83E-08~~	~~2.43E-08~~	~~1.44E-08~~	~~9.92E-09~~
~~WNW~~	~~1.73E-07~~	~~1.88E-07~~	~~3.38E-07~~	~~2.47E-07~~	~~8.95E-08~~	~~5.40E-08~~	~~3.19E-08~~	~~1.80E-08~~	~~1.07E-08~~	~~7.14E-09~~
~~NW~~	~~1.78E-07~~	~~2.19E-07~~	~~1.13E-07~~	~~7.00E-08~~	~~6.29E-08~~	~~6.50E-08~~	~~3.28E-08~~	~~1.64E-08~~	~~9.87E-09~~	~~6.83E-09~~
~~NNW~~	~~2.09E-07~~	~~2.84E-07~~	~~2.57E-07~~	~~1.80E-07~~	~~1.17E-07~~	~~1.08E-07~~	~~4.07E-08~~	~~1.90E-08~~	~~1.35E-08~~	~~9.70E-09~~
~~N~~	~~2.95E-07~~	~~2.45E-07~~	~~4.56E-07~~	~~5.43E-07~~	~~4.58E-07~~	~~1.82E-07~~	~~5.65E-08~~	~~3.07E-08~~	~~1.77E-08~~	~~1.20E-08~~
~~NNE~~	~~6.33E-07~~	~~4.41E-07~~	~~4.80E-07~~	~~4.34E-07~~	~~3.40E-07~~	~~1.52E-07~~	~~7.26E-08~~	~~5.66E-08~~	~~3.20E-08~~	~~1.75E-08~~
~~NE~~	~~9.81E-07~~	~~5.72E-07~~	~~2.87E-07~~	~~1.88E-07~~	~~1.57E-07~~	~~8.61E-08~~	~~5.85E-08~~	~~2.92E-08~~	~~1.49E-08~~	~~1.23E-08~~
~~ENE~~	~~6.21E-07~~	~~5.63E-07~~	~~3.26E-07~~	~~2.41E-07~~	~~2.29E-07~~	~~1.24E-07~~	~~3.99E-08~~	~~1.90E-08~~	~~1.04E-08~~	~~6.88E-09~~
~~E~~	~~1.60E-06~~	~~1.59E-06~~	~~3.93E-07~~	~~1.05E-07~~	~~7.86E-08~~	~~6.36E-08~~	~~2.81E-08~~	~~1.23E-08~~	~~7.15E-09~~	~~4.72E-09~~
~~ESE~~	~~6.49E-07~~	~~5.89E-07~~	~~5.33E-07~~	~~2.98E-07~~	~~1.26E-07~~	~~5.71E-08~~	~~2.59E-08~~	~~1.14E-08~~	~~6.64E-09~~	~~4.37E-09~~
~~SE~~	~~1.94E-06~~	~~8.52E-07~~	~~4.90E-07~~	~~2.79E-07~~	~~1.70E-07~~	~~7.23E-08~~	~~2.34E-08~~	~~1.04E-08~~	~~6.04E-09~~	~~4.01E-09~~
~~SSE~~	~~2.62E-06~~	~~4.19E-07~~	~~4.39E-07~~	~~2.79E-07~~	~~1.52E-07~~	~~6.46E-08~~	~~2.32E-08~~	~~1.02E-08~~	~~5.93E-09~~	~~3.91E-09~~

Sector	Distance (miles)									
	0.5-1	1-2	2-3	3-4	4-5	5-10	10-20	20-30	30-40	40-50
S	2.32E-07	1.20E-07	1.26E-07	3.19E-07	2.90E-07	1.23E-07	4.03E-08	1.80E-08	1.05E-08	7.00E-09
SSW	5.11E-07	8.00E-07	3.01E-07	1.80E-07	2.08E-07	1.33E-07	6.09E-08	3.03E-08	1.78E-08	1.19E-08
SW	3.67E-07	2.73E-07	2.77E-07	3.03E-07	3.47E-07	1.79E-07	7.71E-08	4.15E-08	2.44E-08	1.62E-08
WSW	1.18E-06	2.06E-06	6.77E-07	3.65E-07	4.11E-07	2.26E-07	7.75E-08	3.48E-08	2.04E-08	1.36E-08
W	2.42E-07	2.89E-07	3.60E-07	3.70E-07	3.25E-07	1.38E-07	4.83E-08	2.43E-08	1.44E-08	9.92E-09
WNW	1.73E-07	1.88E-07	3.38E-07	2.46E-07	8.95E-08	5.40E-08	3.19E-08	1.80E-08	1.07E-08	7.14E-09
NW	1.78E-07	2.19E-07	1.13E-07	7.00E-08	6.29E-08	6.50E-08	3.27E-08	1.64E-08	9.87E-09	6.82E-09
NNW	2.09E-07	2.84E-07	2.57E-07	1.80E-07	1.17E-07	1.08E-07	4.07E-08	1.90E-08	1.35E-08	9.69E-09
N	2.95E-07	2.45E-07	4.56E-07	5.43E-07	4.58E-07	1.82E-07	5.65E-08	3.07E-08	1.77E-08	1.20E-08
NNE	6.33E-07	4.41E-07	4.80E-07	4.33E-07	3.39E-07	1.52E-07	7.25E-08	5.64E-08	3.18E-08	1.75E-08
NE	9.81E-07	5.72E-07	2.87E-07	1.88E-07	1.57E-07	8.61E-08	5.85E-08	2.92E-08	1.49E-08	1.23E-08
ENE	6.21E-07	5.63E-07	3.26E-07	2.41E-07	2.29E-07	1.24E-07	3.99E-08	1.90E-08	1.04E-08	6.88E-09
E	1.60E-06	1.59E-06	3.93E-07	1.05E-07	7.86E-08	6.36E-08	2.81E-08	1.23E-08	7.15E-09	4.72E-09
ESE	6.49E-07	5.89E-07	5.33E-07	2.98E-07	1.26E-07	5.71E-08	2.59E-08	1.14E-08	6.64E-09	4.37E-09
SE	1.94E-06	8.52E-07	4.90E-07	2.79E-07	1.70E-07	7.23E-08	2.34E-08	1.04E-08	6.04E-09	4.00E-09
SSE	2.62E-06	4.19E-07	4.39E-07	2.79E-07	1.52E-07	6.46E-08	2.32E-08	1.02E-08	5.93E-09	3.91E-09

Table 4.8-19: Annual Average D/Q for Specified Distances at Each Sector (Page 1 of 3)

	~~Distance (miles)~~										
~~Sector~~	~~0.25~~	~~0.5~~	~~0.75~~	~~1~~	~~1.5~~	~~2~~	~~2.5~~	~~3~~	~~3.5~~	~~4~~	~~4.5~~
~~S~~	~~4.59E-09~~	~~3.14E-09~~	~~2.13E-09~~	~~1.20E-09~~	~~4.99E-10~~	~~2.83E-10~~	~~1.83E-10~~	~~1.30E-10~~	~~1.70E-10~~	~~2.69E-10~~	~~2.15E-10~~
~~SSW~~	~~5.48E-09~~	~~3.97E-09~~	~~2.94E-09~~	~~1.72E-09~~	~~7.81E-10~~	~~4.20E-10~~	~~2.69E-10~~	~~1.87E-10~~	~~1.40E-10~~	~~1.09E-10~~	~~9.14E-11~~
~~SW~~	~~1.00E-08~~	~~7.16E-09~~	~~5.07E-09~~	~~2.99E-09~~	~~1.28E-09~~	~~7.29E-10~~	~~4.72E-10~~	~~3.41E-10~~	~~2.54E-10~~	~~2.09E-10~~	~~1.84E-10~~
~~WSW~~	~~1.19E-08~~	~~8.41E-09~~	~~6.47E-09~~	~~3.93E-09~~	~~3.27E-09~~	~~1.01E-09~~	~~6.09E-10~~	~~3.87E-10~~	~~3.01E-10~~	~~2.62E-10~~	~~2.79E-10~~
~~W~~	~~3.68E-09~~	~~2.78E-09~~	~~2.04E-09~~	~~1.25E-09~~	~~5.29E-10~~	~~3.03E-10~~	~~2.13E-10~~	~~1.51E-10~~	~~1.27E-10~~	~~1.20E-10~~	~~1.25E-10~~
~~WNW~~	~~2.36E-09~~	~~1.79E-09~~	~~1.30E-09~~	~~7.70E-10~~	~~3.23E-10~~	~~1.85E-10~~	~~1.25E-10~~	~~9.83E-11~~	~~6.77E-11~~	~~5.05E-11~~	~~3.79E-11~~
~~NW~~	~~2.85E-09~~	~~1.55E-09~~	~~1.15E-09~~	~~6.86E-10~~	~~2.93E-10~~	~~1.69E-10~~	~~1.10E-10~~	~~7.76E-11~~	~~5.75E-11~~	~~4.43E-11~~	~~3.51E-11~~
~~NNW~~	~~2.70E-09~~	~~2.01E-09~~	~~1.46E-09~~	~~8.49E-10~~	~~3.51E-10~~	~~1.99E-10~~	~~1.29E-10~~	~~9.16E-11~~	~~6.82E-11~~	~~5.20E-11~~	~~4.08E-11~~
~~N~~	~~6.41E-09~~	~~4.74E-09~~	~~3.39E-09~~	~~1.98E-09~~	~~8.29E-10~~	~~4.77E-10~~	~~3.11E-10~~	~~2.30E-10~~	~~1.99E-10~~	~~2.04E-10~~	~~2.01E-10~~
~~NNE~~	~~1.70E-08~~	~~1.24E-08~~	~~8.68E-09~~	~~4.99E-09~~	~~2.06E-09~~	~~1.15E-09~~	~~7.61E-10~~	~~5.31E-10~~	~~3.96E-10~~	~~3.08E-10~~	~~2.59E-10~~
~~NE~~	~~2.24E-08~~	~~1.61E-08~~	~~1.12E-08~~	~~6.36E-09~~	~~2.73E-09~~	~~1.45E-09~~	~~9.23E-10~~	~~6.42E-10~~	~~4.72E-10~~	~~3.62E-10~~	~~2.86E-10~~
~~ENE~~	~~1.24E-08~~	~~9.05E-09~~	~~6.34E-09~~	~~3.80E-09~~	~~1.56E-09~~	~~8.68E-10~~	~~5.54E-10~~	~~3.86E-10~~	~~3.07E-10~~	~~2.46E-10~~	~~2.24E-10~~
~~E~~	~~1.06E-08~~	~~8.19E-09~~	~~6.36E-09~~	~~4.74E-09~~	~~3.90E-09~~	~~1.32E-09~~	~~4.98E-10~~	~~3.11E-10~~	~~2.29E-10~~	~~1.75E-10~~	~~1.39E-10~~
~~ESE~~	~~1.44E-08~~	~~9.70E-09~~	~~7.01E-09~~	~~4.01E-09~~	~~1.64E-09~~	~~1.12E-09~~	~~1.18E-09~~	~~9.60E-10~~	~~5.60E-10~~	~~3.15E-10~~	~~1.99E-10~~
~~SE~~	~~1.56E-08~~	~~1.33E-08~~	~~7.49E-09~~	~~3.77E-09~~	~~1.57E-09~~	~~1.25E-09~~	~~8.67E-10~~	~~6.49E-10~~	~~4.62E-10~~	~~3.46E-10~~	~~2.70E-10~~
~~SSE~~	~~6.73E-09~~	~~8.97E-09~~	~~3.14E-09~~	~~1.30E-09~~	~~5.05E-10~~	~~3.05E-10~~	~~4.34E-10~~	~~3.88E-10~~	~~2.71E-10~~	~~1.61E-10~~	~~9.87E-11~~

Sector	Distance (miles)										
	0.25	0.5	0.75	1	1.5	2	2.5	3	3.5	4	4.5
S	4.65E-09	3.14E-09	2.13E-09	1.20E-09	4.99E-10	2.83E-10	1.83E-10	1.30E-10	1.70E-10	2.69E-10	2.15E-10
SSW	5.48E-09	3.97E-09	2.94E-09	1.72E-09	7.84E-10	4.20E-10	2.69E-10	1.87E-10	1.40E-10	1.09E-10	9.14E-11
SW	1.00E-08	7.16E-09	5.07E-09	2.99E-09	1.28E-09	7.29E-10	4.72E-10	3.42E-10	2.54E-10	2.09E-10	1.86E-10
WSW	1.19E-08	8.41E-09	6.47E-09	3.93E-09	3.27E-09	1.01E-09	6.09E-10	3.88E-10	3.13E-10	2.63E-10	2.79E-10
W	3.68E-09	2.78E-09	2.04E-09	1.25E-09	5.29E-10	3.03E-10	2.13E-10	1.51E-10	1.27E-10	1.20E-10	1.25E-10
WNW	2.36E-09	1.79E-09	1.30E-09	7.70E-10	3.23E-10	1.85E-10	1.25E-10	9.83E-11	6.77E-11	5.05E-11	3.79E-11
NW	2.05E-09	1.55E-09	1.15E-09	6.86E-10	2.93E-10	1.69E-10	1.10E-10	7.76E-11	5.75E-11	4.43E-11	3.51E-11
NNW	2.70E-09	2.01E-09	1.46E-09	8.49E-10	3.51E-10	1.99E-10	1.29E-10	9.16E-11	6.82E-11	5.20E-11	4.08E-11
N	6.41E-09	4.74E-09	3.39E-09	1.98E-09	8.29E-10	4.79E-10	3.11E-10	2.39E-10	1.99E-10	2.04E-10	2.01E-10
NNE	1.70E-08	1.24E-08	8.68E-09	4.99E-09	2.06E-09	1.15E-09	7.61E-10	5.31E-10	3.96E-10	3.08E-10	2.59E-10
NE	2.24E-08	1.61E-08	1.12E-08	6.36E-09	2.75E-09	1.45E-09	9.23E-10	6.42E-10	4.72E-10	3.62E-10	2.86E-10
ENE	1.24E-08	9.05E-09	6.34E-09	3.82E-09	1.56E-09	8.68E-10	5.54E-10	3.86E-10	3.07E-10	2.48E-10	2.24E-10
E	1.06E-08	8.62E-09	6.34E-09	4.73E-09	3.90E-09	1.31E-09	4.98E-10	3.11E-10	2.29E-10	1.76E-10	1.39E-10
ESE	1.44E-08	9.70E-09	7.38E-09	4.00E-09	1.64E-09	1.12E-09	1.18E-09	9.60E-10	5.60E-10	3.15E-10	1.99E-10
SE	1.56E-08	1.33E-08	7.49E-09	3.99E-09	1.56E-09	1.25E-09	8.67E-10	6.49E-10	4.62E-10	3.46E-10	2.70E-10
SSE	6.73E-09	8.97E-09	3.14E-09	1.32E-09	5.05E-10	3.10E-10	4.34E-10	3.88E-10	2.71E-10	1.61E-10	9.87E-11

Table 4.8-19: Annual Average D/Q for Specified Distances at Each Sector (Page 2 of 3)

	~~Distance (miles)~~										
~~Sector~~	~~5~~	~~7.5~~	~~10~~	~~15~~	~~20~~	~~25~~	~~30~~	~~35~~	~~40~~	~~45~~	~~50~~
~~S~~	~~1.71E-10~~	~~7.75E-11~~	~~4.93E-11~~	~~2.37E-11~~	~~1.44E-11~~	~~9.77E-12~~	~~7.07E-12~~	~~5.35E-12~~	~~4.19E-12~~	~~3.37E-12~~	~~2.76E-12~~
~~SSW~~	~~8.32E-11~~	~~4.71E-11~~	~~4.02E-11~~	~~4.21E-11~~	~~2.43E-11~~	~~1.65E-11~~	~~1.17E-11~~	~~9.01E-12~~	~~7.05E-12~~	~~5.66E-12~~	~~4.64E-12~~
~~SW~~	~~1.89E-10~~	~~9.14E-11~~	~~5.15E-11~~	~~6.25E-11~~	~~3.83E-11~~	~~2.65E-11~~	~~1.92E-11~~	~~1.46E-11~~	~~1.14E-11~~	~~9.28E-12~~	~~7.60E-12~~
~~WSW~~	~~3.06E-10~~	~~1.81E-10~~	~~1.16E-10~~	~~5.88E-11~~	~~3.81E-11~~	~~2.47E-11~~	~~1.84E-11~~	~~1.37E-11~~	~~1.16E-11~~	~~8.73E-12~~	~~7.20E-12~~
~~W~~	~~1.24E-10~~	~~7.06E-11~~	~~2.55E-11~~	~~2.90E-11~~	~~2.01E-11~~	~~1.43E-11~~	~~1.02E-11~~	~~7.12E-12~~	~~5.34E-12~~	~~4.47E-12~~	~~3.81E-12~~
~~WNW~~	~~3.06E-11~~	~~1.55E-11~~	~~1.53E-11~~	~~5.36E-12~~	~~1.72E-11~~	~~1.13E-11~~	~~8.03E-12~~	~~4.97E-12~~	~~3.88E-12~~	~~3.17E-12~~	~~2.59E-12~~
~~NW~~	~~2.84E-11~~	~~1.94E-11~~	~~3.76E-11~~	~~4.53E-12~~	~~1.52E-11~~	~~1.06E-11~~	~~4.03E-12~~	~~4.48E-12~~	~~3.60E-12~~	~~2.88E-12~~	~~2.35E-12~~
~~NNW~~	~~3.30E-11~~	~~6.04E-11~~	~~4.88E-11~~	~~5.24E-12~~	~~9.62E-12~~	~~4.41E-12~~	~~3.38E-12~~	~~5.79E-12~~	~~4.58E-12~~	~~3.70E-12~~	~~3.02E-12~~
~~N~~	~~1.91E-10~~	~~7.06E-11~~	~~2.83E-11~~	~~2.32E-11~~	~~2.61E-11~~	~~1.78E-11~~	~~1.29E-11~~	~~6.30E-12~~	~~4.68E-12~~	~~6.79E-12~~	~~5.26E-12~~
~~NNE~~	~~2.18E-10~~	~~9.18E-11~~	~~5.43E-11~~	~~2.91E-11~~	~~5.81E-11~~	~~3.97E-11~~	~~2.90E-11~~	~~2.46E-11~~	~~1.94E-11~~	~~8.27E-12~~	~~5.10E-12~~
~~NE~~	~~2.31E-10~~	~~1.10E-10~~	~~6.81E-11~~	~~9.61E-11~~	~~5.62E-11~~	~~2.03E-11~~	~~1.36E-11~~	~~1.11E-11~~	~~9.29E-12~~	~~8.98E-12~~	~~1.01E-11~~
~~ENE~~	~~2.42E-10~~	~~1.43E-10~~	~~9.57E-11~~	~~3.39E-11~~	~~3.14E-11~~	~~2.12E-11~~	~~1.53E-11~~	~~1.15E-11~~	~~8.95E-12~~	~~7.22E-12~~	~~5.92E-12~~
~~E~~	~~1.12E-10~~	~~9.90E-11~~	~~6.83E-11~~	~~3.86E-11~~	~~2.35E-11~~	~~1.58E-11~~	~~1.14E-11~~	~~8.58E-12~~	~~6.68E-12~~	~~5.35E-12~~	~~4.39E-12~~
~~ESE~~	~~1.36E-10~~	~~9.70E-11~~	~~8.21E-11~~	~~4.53E-11~~	~~2.75E-11~~	~~1.85E-11~~	~~1.33E-11~~	~~1.00E-11~~	~~7.83E-12~~	~~6.27E-12~~	~~5.41E-12~~
~~SE~~	~~2.17E-10~~	~~1.08E-10~~	~~6.52E-11~~	~~3.40E-11~~	~~2.06E-11~~	~~1.39E-11~~	~~1.00E-11~~	~~7.57E-12~~	~~5.91E-12~~	~~4.74E-12~~	~~3.88E-12~~
~~SSE~~	~~6.35E-11~~	~~5.72E-11~~	~~3.61E-11~~	~~1.96E-11~~	~~1.12E-11~~	~~7.62E-12~~	~~5.52E-12~~	~~4.19E-12~~	~~3.28E-12~~	~~2.64E-12~~	~~2.17E-12~~

Sector	Distance (miles)										
	5	7.5	10	15	20	25	30	35	40	45	50
S	1.71E-10	7.75E-11	4.93E-11	2.49E-11	1.44E-11	9.77E-12	7.07E-12	5.35E-12	4.19E-12	3.37E-12	2.76E-12
SSW	8.33E-11	4.71E-11	4.02E-11	4.21E-11	2.43E-11	1.65E-11	1.17E-11	9.00E-12	7.05E-12	5.66E-12	4.64E-12
SW	1.90E-10	9.14E-11	5.15E-11	6.25E-11	3.83E-11	2.65E-11	1.92E-11	1.46E-11	1.14E-11	9.27E-12	7.59E-12
WSW	3.06E-10	1.81E-10	1.15E-10	5.88E-11	3.81E-11	2.46E-11	1.84E-11	1.37E-11	1.14E-11	8.73E-12	7.20E-12
W	1.24E-10	7.06E-11	2.55E-11	2.90E-11	2.01E-11	1.43E-11	1.02E-11	7.13E-12	5.35E-12	4.48E-12	3.82E-12
WNW	3.06E-11	1.55E-11	1.53E-11	5.36E-12	1.72E-11	1.13E-11	8.02E-12	4.96E-12	3.88E-12	3.17E-12	2.59E-12
NW	2.84E-11	1.94E-11	3.75E-11	4.53E-12	1.52E-11	1.06E-11	4.03E-12	4.48E-12	3.60E-12	2.88E-12	2.35E-12
NNW	3.30E-11	6.04E-11	4.88E-11	5.24E-12	9.62E-12	4.41E-12	3.38E-12	5.79E-12	4.58E-12	3.70E-12	3.02E-12
N	1.91E-10	8.59E-11	2.83E-11	2.32E-11	2.61E-11	1.78E-11	1.29E-11	6.28E-12	4.68E-12	6.78E-12	5.26E-12
NNE	2.23E-10	9.18E-11	5.43E-11	2.91E-11	5.78E-11	3.95E-11	2.89E-11	2.45E-11	1.93E-11	8.27E-12	5.10E-12
NE	2.31E-10	1.10E-10	6.81E-11	9.60E-11	5.61E-11	2.03E-11	1.36E-11	1.11E-11	9.29E-12	8.97E-12	1.01E-11
ENE	2.42E-10	1.43E-10	9.56E-11	3.39E-11	3.14E-11	2.12E-11	1.53E-11	1.15E-11	8.95E-12	7.22E-12	5.91E-12
E	1.14E-10	9.92E-11	6.83E-11	3.86E-11	2.35E-11	1.58E-11	1.14E-11	8.58E-12	6.68E-12	5.35E-12	4.38E-12
ESE	1.36E-10	9.71E-11	8.20E-11	4.53E-11	2.75E-11	1.85E-11	1.33E-11	1.00E-11	7.82E-12	6.27E-12	5.41E-12
SE	2.17E-10	1.08E-10	6.52E-11	3.40E-11	2.06E-11	1.39E-11	1.00E-11	7.57E-12	5.91E-12	4.73E-12	3.87E-12
SSE	6.35E-11	5.72E-11	3.61E-11	1.96E-11	1.12E-11	7.62E-12	5.52E-12	4.19E-12	3.28E-12	2.64E-12	2.17E-12

Table 4.8-19: Annual Average D/Q for Specified Distances at Each Sector (Page 3 of 3)

	~~Distance (miles)~~									
~~Sector~~	~~0.5-1~~	~~1-2~~	~~2-3~~	~~3-4~~	~~4-5~~	~~5-10~~	~~10-20~~	~~20-30~~	~~30-40~~	~~40-50~~
~~S~~	~~1.94E-09~~	~~5.58E-10~~	~~1.88E-10~~	~~1.96E-10~~	~~2.15E-10~~	~~8.57E-11~~	~~2.53E-11~~	~~9.93E-12~~	~~5.40E-12~~	~~3.39E-12~~
~~SSW~~	~~2.63E-09~~	~~8.29E-10~~	~~2.76E-10~~	~~1.42E-10~~	~~9.37E-11~~	~~5.20E-11~~	~~3.38E-11~~	~~1.67E-11~~	~~9.04E-12~~	~~5.70E-12~~
~~SW~~	~~4.61E-09~~	~~1.41E-09~~	~~4.88E-10~~	~~2.62E-10~~	~~1.93E-10~~	~~9.54E-11~~	~~4.93E-11~~	~~2.67E-11~~	~~1.47E-11~~	~~9.28E-12~~
~~WSW~~	~~5.77E-09~~	~~2.41E-09~~	~~6.28E-10~~	~~3.11E-10~~	~~2.84E-10~~	~~1.80E-10~~	~~6.22E-11~~	~~2.57E-11~~	~~1.42E-11~~	~~9.02E-12~~
~~W~~	~~1.85E-09~~	~~5.88E-10~~	~~2.12E-10~~	~~1.31E-10~~	~~1.23E-10~~	~~6.23E-11~~	~~2.43E-11~~	~~1.42E-11~~	~~7.34E-12~~	~~4.48E-12~~
~~WNW~~	~~1.18E-09~~	~~3.61E-10~~	~~1.30E-10~~	~~6.99E-11~~	~~3.89E-11~~	~~1.88E-11~~	~~1.28E-11~~	~~1.16E-11~~	~~5.43E-12~~	~~3.16E-12~~
~~NW~~	~~1.03E-09~~	~~3.25E-10~~	~~1.13E-10~~	~~5.82E-11~~	~~3.53E-11~~	~~2.95E-11~~	~~1.66E-11~~	~~9.18E-12~~	~~4.02E-12~~	~~2.90E-12~~
~~NNW~~	~~1.31E-09~~	~~3.94E-10~~	~~1.33E-10~~	~~6.87E-11~~	~~4.12E-11~~	~~4.92E-11~~	~~1.69E-11~~	~~5.39E-12~~	~~4.64E-12~~	~~3.71E-12~~
~~N~~	~~3.06E-09~~	~~9.29E-10~~	~~3.23E-10~~	~~2.10E-10~~	~~1.98E-10~~	~~7.85E-11~~	~~2.56E-11~~	~~1.80E-11~~	~~7.56E-12~~	~~5.60E-12~~
~~NNE~~	~~7.86E-09~~	~~2.31E-09~~	~~7.73E-10~~	~~4.01E-10~~	~~2.58E-10~~	~~1.03E-10~~	~~4.76E-11~~	~~4.03E-11~~	~~2.39E-11~~	~~1.04E-11~~
~~NE~~	~~1.01E-08~~	~~2.97E-09~~	~~9.50E-10~~	~~4.78E-10~~	~~2.88E-10~~	~~1.18E-10~~	~~7.21E-11~~	~~2.72E-11~~	~~1.11E-11~~	~~9.50E-12~~
~~ENE~~	~~5.81E-09~~	~~1.75E-09~~	~~5.71E-10~~	~~3.06E-10~~	~~2.37E-10~~	~~1.44E-10~~	~~4.65E-11~~	~~2.15E-11~~	~~1.16E-11~~	~~7.25E-12~~
~~E~~	~~6.04E-09~~	~~2.94E-09~~	~~6.41E-10~~	~~2.32E-10~~	~~1.40E-10~~	~~8.83E-11~~	~~3.85E-11~~	~~1.61E-11~~	~~8.66E-12~~	~~5.39E-12~~
~~ESE~~	~~6.27E-09~~	~~1.94E-09~~	~~1.08E-09~~	~~5.81E-10~~	~~2.10E-10~~	~~9.91E-11~~	~~4.56E-11~~	~~1.88E-11~~	~~1.01E-11~~	~~6.41E-12~~
~~SE~~	~~7.12E-09~~	~~1.91E-09~~	~~8.81E-10~~	~~4.71E-10~~	~~2.73E-10~~	~~1.13E-10~~	~~3.50E-11~~	~~1.42E-11~~	~~7.64E-12~~	~~4.77E-12~~
~~SSE~~	~~3.62E-09~~	~~5.94E-10~~	~~3.81E-10~~	~~2.63E-10~~	~~1.04E-10~~	~~4.92E-11~~	~~1.95E-11~~	~~7.75E-12~~	~~4.22E-12~~	~~2.65E-12~~

Sector	Distance (miles)									
	0.5-1	1-2	2-3	3-4	4-5	5-10	10-20	20-30	30-40	40-50
S	1.94E-09	5.58E-10	1.88E-10	1.96E-10	2.15E-10	8.57E-11	2.57E-11	9.93E-12	5.40E-12	3.39E-12
SSW	2.63E-09	8.30E-10	2.76E-10	1.42E-10	9.37E-11	5.21E-11	3.38E-11	1.67E-11	9.04E-12	5.69E-12
SW	4.61E-09	1.41E-09	4.88E-10	2.62E-10	1.94E-10	9.56E-11	4.93E-11	2.67E-11	1.47E-11	9.28E-12
WSW	5.77E-09	2.41E-09	6.28E-10	3.16E-10	2.84E-10	1.80E-10	6.22E-11	2.57E-11	1.42E-11	8.95E-12
W	1.85E-09	5.88E-10	2.12E-10	1.31E-10	1.23E-10	6.24E-11	2.43E-11	1.42E-11	7.34E-12	4.49E-12
WNW	1.18E-09	3.61E-10	1.30E-10	6.99E-11	3.89E-11	1.88E-11	1.28E-11	1.16E-11	5.42E-12	3.16E-12
NW	1.03E-09	3.25E-10	1.13E-10	5.82E-11	3.53E-11	2.95E-11	1.66E-11	9.18E-12	4.02E-12	2.89E-12
NNW	1.31E-09	3.94E-10	1.33E-10	6.87E-11	4.12E-11	4.92E-11	1.69E-11	5.39E-12	4.64E-12	3.71E-12
N	3.06E-09	9.30E-10	3.27E-10	2.12E-10	1.98E-10	8.36E-11	2.56E-11	1.80E-11	7.55E-12	5.60E-12
NNE	7.86E-09	2.31E-09	7.73E-10	4.01E-10	2.60E-10	1.04E-10	4.74E-11	4.01E-11	2.38E-11	1.04E-11
NE	1.01E-08	2.97E-09	9.50E-10	4.78E-10	2.88E-10	1.18E-10	7.21E-11	2.72E-11	1.11E-11	9.49E-12
ENE	5.82E-09	1.76E-09	5.71E-10	3.07E-10	2.38E-10	1.44E-10	4.65E-11	2.15E-11	1.16E-11	7.25E-12
E	6.13E-09	2.93E-09	6.40E-10	2.32E-10	1.41E-10	8.88E-11	3.85E-11	1.61E-11	8.65E-12	5.38E-12
ESE	6.39E-09	1.93E-09	1.08E-09	5.81E-10	2.10E-10	9.91E-11	4.55E-11	1.88E-11	1.01E-11	6.41E-12
SE	7.22E-09	1.96E-09	8.81E-10	4.71E-10	2.73E-10	1.13E-10	3.50E-11	1.42E-11	7.64E-12	4.76E-12
SSE	3.62E-09	6.00E-10	3.83E-10	2.63E-10	1.04E-10	4.92E-11	1.95E-11	7.75E-12	4.22E-12	2.65E-12

Table 4.8-20: X/Q and D/Q Values for No Decay, Decay, and Undepleted at Each Receptor Location (Page 1 of ~~2~~3)

Receptor	Sector	Distance (miles)	Distance (meters)	X/Q Values (sec/m³) No Decay Undepleted	X/Q Values (sec/m³) 2.26 Decay Undepleted	X/Q Values (sec/m³) 8 Day Delay Depleted	D/Q (m⁻²)
Site Boundary	S	0.29	466	5.17E-07	5.16E-07	5.15E-07	~~4.39~~4.43E-09
	SSW	0.31	495	6.49E-07	6.47E-07	6.44E-07	5.21E-09
	SW	0.34	549	7.38E-07	7.36E-07	7.32E-07	9.09E-09
	WSW	0.33	531	9.22E-07	9.20E-07	9.13E-07	1.09E-08
	W	0.2	315	4.74E-07	4.73E-07	4.71E-07	2.72E-09
	WNW	0.27	428	3.46E-07	3.46E-07	3.44E-07	2.35E-09
	NW	0.31	506	2.53E-07	2.52E-07	2.51E-07	1.96E-09
	NNW	0.38	608	2.95E-07	2.94E-07	2.93E-07	2.39E-09
	N	0.37	596	6.10E-07	6.08E-07	6.05E-07	5.69E-09
	N	0.47	757	4.38E-07	4.37E-07	4.33E-07	4.95E-09
	N	0.5	804	4.04E-07	4.03E-07	3.99E-07	4.74E-09
	NNE	0.25	408	1.70E-06	1.70E-06	1.69E-06	1.69E-08
	NE	0.2	321	2.40E-06	2.39E-06	2.38E-06	1.80E-08
	ENE	0.2	315	1.42E-06	1.42E-06	1.41E-06	9.59E-09
	E	0.22	350	1.21E-06	1.21E-06	1.20E-06	9.27E-09
	ESE	0.28	449	9.42E-07	9.41E-07	9.32E-07	1.39E-08
	SE	0.34	549	2.06E-06	2.06E-06	2.05E-06	1.78E-08
	SSE	0.38	613	2.54E-06	2.53E-06	2.49E-06	7.17E-09

Table 4.8-20: X/Q and D/Q Values for No Decay, Decay, and Undepleted at Each Receptor Location (Page 2 of ~~2~~3)

~~Receptor~~	~~Sector~~	~~Distance (miles)~~	~~Distance (meters)~~	~~X/Q Values (sec/m³) No Decay Undepleted~~	~~X/Q Values (sec/m³) 2.26 Decay Undepleted~~	~~X/Q Values (sec/m³) 8 Day Delay Depleted~~	~~D/Q (m⁻²)~~
~~Residence~~	~~S~~	~~0.7~~	~~1127~~	~~2.42E-07~~	~~2.41E-07~~	~~2.39E-07~~	~~2.28E-09~~
	~~SSW~~	~~0.7~~	~~1127~~	~~3.87E-07~~	~~3.85E-07~~	~~3.83E-07~~	~~3.13E-09~~
	~~SW~~	~~0.7~~	~~1127~~	~~3.70E-07~~	~~3.68E-07~~	~~3.64E-07~~	~~5.38E-09~~
	~~WSW~~	~~0.7~~	~~1127~~	~~9.41E-07~~	~~9.39E-07~~	~~9.38E-07~~	~~6.94E-09~~
	~~W~~	~~0.7~~	~~1127~~	~~2.32E-07~~	~~2.31E-07~~	~~2.29E-07~~	~~2.15E-09~~
	~~WNW~~	~~0.7~~	~~1127~~	~~1.67E-07~~	~~1.66E-07~~	~~1.65E-07~~	~~1.38E-09~~
	~~NW~~	~~0.7~~	~~1127~~	~~1.52E-07~~	~~1.51E-07~~	~~1.49E-07~~	~~1.21E-09~~
	~~NNW~~	~~0.7~~	~~1127~~	~~1.74E-07~~	~~1.73E-07~~	~~1.72E-07~~	~~1.55E-09~~
	~~N~~	~~0.7~~	~~1127~~	~~2.92E-07~~	~~2.91E-07~~	~~2.87E-07~~	~~3.60E-09~~
	~~NNE~~	~~0.7~~	~~1127~~	~~6.40E-07~~	~~6.38E-07~~	~~6.29E-07~~	~~9.26E-09~~
	~~NE~~	~~0.7~~	~~1127~~	~~1.03E-06~~	~~1.03E-06~~	~~1.02E-06~~	~~1.19E-08~~
	~~ENE~~	~~0.7~~	~~1127~~	~~5.97E-07~~	~~5.96E-07~~	~~5.90E-07~~	~~6.77E-09~~
	~~E~~	~~0.7~~	~~1127~~	~~1.22E-06~~	~~1.22E-06~~	~~1.21E-06~~	~~6.19E-09~~
	~~ESE~~	~~0.7~~	~~1127~~	~~6.80E-07~~	~~6.79E-07~~	~~6.69E-07~~	~~6.94E-09~~
	~~SE~~	~~0.7~~	~~1127~~	~~2.21E-06~~	~~2.20E-06~~	~~2.19E-06~~	~~8.29E-09~~
	~~SSE~~	~~0.7~~	~~1127~~	~~2.73E-06~~	~~2.71E-06~~	~~2.66E-06~~	~~4.16E-09~~
~~Note: The nearest resident distance of 0.7 miles was used for all sectors.~~							

Receptor	Sector	Distance (miles)	Distance (meters)	X/Q Values (sec/m^3) No Decay Undepleted	X/Q Values (sec/m^3) 2.26 Decay Undepleted	X/Q Values (sec/m^3) 8 Day Delay Depleted	D/Q (m^{-2})
Residence	S	1.1	1770	1.43E-07	1.42E-07	1.40E-07	9.77E-10
	SSW	1.1	1770	7.42E-07	7.35E-07	7.36E-07	1.41E-09
	SW	1.1	1770	2.84E-07	2.83E-07	2.79E-07	2.45E-09
	WSW	1.1	1770	1.86E-06	1.85E-06	1.84E-06	3.52E-09
	W	1.1	1770	2.43E-07	2.41E-07	2.39E-07	1.02E-09
	WNW	1.1	1770	1.54E-07	1.53E-07	1.52E-07	6.31E-10
	NW	1.1	1770	2.15E-07	2.13E-07	2.12E-07	5.64E-10
	NNW	1.1	1770	2.39E-07	2.37E-07	2.37E-07	6.93E-10
	N	1.1	1770	2.08E-07	2.07E-07	2.03E-07	1.62E-09
	NNE	1.1	1770	4.61E-07	4.59E-07	4.51E-07	4.07E-09
	NE	1.1	1770	7.62E-07	7.59E-07	7.48E-07	5.18E-09
	ENE	1.1	1770	6.16E-07	6.13E-07	6.08E-07	3.11E-09
	E	1.1	1770	2.57E-06	2.55E-06	2.56E-06	5.00E-09
	ESE	1.1	1770	5.91E-07	5.89E-07	5.80E-07	3.25E-09
	SE	1.1	1770	1.23E-06	1.22E-06	1.22E-06	3.16E-09
	SSE	1.1	1770	5.60E-07	5.56E-07	5.48E-07	1.06E-09
Note: Nearest resident distance was set at 1.1 miles (1770 m)							

Table 4.8-20: X/Q and D/Q Values for No Decay, Decay, and Undepleted at Each Receptor Location (Page 3 of 3)

Receptor	Sector	Distance (miles)	Distance (meters)	X/Q Values (sec/m³) No Decay Undepleted	X/Q Values (sec/m³) 2.26 Decay Undepleted	X/Q Values (sec/m³) 8 Day Delay Depleted	D/Q (m⁻²)
Maximum X/Q (MEI)	S	0.25	402	5.40E-07	5.39E-07	5.36E-07	4.65E-09
	SSW	1.5	2414	1.25E-06	1.24E-06	1.27E-06	7.84E-10
	SW	0.25	402	9.48E-07	9.47E-07	9.42E-07	1.00E-08
	WSW	1.5	2414	3.44E-06	3.40E-06	3.41E-06	3.27E-09
	W	0.25	402	4.63E-07	4.63E-07	4.60E-07	3.68E-09
	WNW	0.25	402	3.54E-07	3.54E-07	3.52E-07	2.36E-09
	NW	0.25	402	2.82E-07	2.82E-07	2.81E-07	2.05E-09
	NNW	0.25	402	4.07E-07	4.07E-07	4.05E-07	2.70E-09
	N	0.25	402	7.86E-07	7.85E-07	7.82E-07	6.41E-09
	NNE	0.25	402	1.70E-06	1.70E-06	1.69E-06	1.70E-08
	NE	0.25	402	2.23E-06	2.23E-06	2.21E-06	2.24E-08
	ENE	0.25	402	1.31E-06	1.31E-06	1.30E-06	1.24E-08
	E	1	1609	2.18E-06	2.17E-06	2.17E-06	4.73E-09
	ESE	0.25	402	1.02E-06	1.02E-06	1.01E-06	1.44E-08
	SE	0.5	804	2.75E-06	2.75E-06	2.75E-06	1.33E-08
	SSE	0.5	804	6.90E-06	6.87E-06	6.88E-06	8.97E-09

Table 4.8-21: Gaseous Pathway Parameters – GASPAR II Information

Parameter	Values
Long-term average X/Q values~~Release source terms~~	See Table 4.8-14.
Population	664,124
Meteorology	See Tables 4.8-6 to 4.8-13.
Midpoint of Plant Life	6.31E+07 seconds (2 years)

Table 4.8-22: Gaseous Effluent Doses ~~to MEI~~

~~Location~~	~~Pathway~~		~~Dose per Unit (mrem/yr)~~							
			~~Total Body~~	~~GI Tract~~	~~Bone~~	~~Liver~~	~~Kidney~~	~~Thyroid~~	~~Lung~~	~~Skin~~
~~Maximum Dose Site Boundary Location (0.38 miles, SSE)~~	~~External~~	~~Plume~~	~~7.2E-02~~	~~7.2E-02~~	~~7.2E-02~~	~~7.2E-02~~	~~7.2E-02~~	~~7.2E-02~~	~~7.4E-02~~	~~1.7E-01~~
		~~Ground~~	~~1.9E-01~~	~~1.9E-01~~	~~1.9E-01~~	~~1.9E-01~~	~~1.9E-01~~	~~1.9E-01~~	~~1.9E-01~~	~~2.3E-01~~
		~~Total~~	~~2.6E-01~~	~~2.6E-01~~	~~2.6E-01~~	~~2.6E-01~~	~~2.6E-01~~	~~2.6E-01~~	~~2.6E-01~~	~~3.9E-01~~
	~~Inhalation~~	~~Adult~~	~~2.1E-02~~	~~2.1E-02~~	~~1.4E-02~~	~~2.1E-02~~	~~2.2E-02~~	~~1.6E-01~~	~~2.8E-02~~	~~1.8E-02~~
		~~Teen~~	~~2.2E-02~~	~~2.2E-02~~	~~2.0E-02~~	~~2.3E-02~~	~~2.3E-02~~	~~1.9E-01~~	~~3.4E-02~~	~~1.8E-02~~
		~~Child~~	~~2.1E-02~~	~~2.1E-02~~	~~2.7E-02~~	~~2.2E-02~~	~~2.2E-02~~	~~2.3E-01~~	~~3.0E-02~~	~~1.6E-02~~
		~~Infant~~	~~1.3E-02~~	~~1.3E-02~~	~~1.8E-02~~	~~1.4E-02~~	~~1.4E-02~~	~~2.0E-01~~	~~2.0E-02~~	~~9.2E-03~~
	~~All~~	~~Adult~~	~~2.8E-01~~	~~2.8E-01~~	~~2.8E-01~~	~~2.8E-01~~	~~2.8E-01~~	~~4.1E-01~~	~~2.9E-01~~	~~4.0E-01~~
		~~Teen~~	~~2.8E-01~~	~~2.8E-01~~	~~2.8E-01~~	~~2.8E-01~~	~~2.8E-01~~	~~4.5E-01~~	~~3.0E-01~~	~~4.0E-01~~
		~~Child~~	~~2.8E-01~~	~~2.8E-01~~	~~2.9E-01~~	~~2.8E-01~~	~~2.8E-01~~	~~4.8E-01~~	~~2.9E-01~~	~~4.0E-01~~
		~~Infant~~	~~2.7E-01~~	~~2.7E-01~~	~~2.8E-01~~	~~2.8E-01~~	~~2.8E-01~~	~~4.6E-01~~	~~2.8E-01~~	~~3.9E-01~~
~~Residence (0.7 miles, SSE)~~	~~External~~	~~Plume~~	~~7.3E-02~~	~~7.3E-02~~	~~7.3E-02~~	~~7.3E-02~~	~~7.3E-02~~	~~7.3E-02~~	~~7.4E-02~~	~~5.5E+00~~
		~~Ground~~	~~1.3E-01~~	~~1.3E-01~~	~~1.3E-01~~	~~1.3E-01~~	~~1.3E-01~~	~~1.3E-01~~	~~1.3E-01~~	~~1.5E-01~~
		~~Total~~	~~1.7E-01~~	~~1.7E-01~~	~~1.7E-01~~	~~1.7E-01~~	~~1.7E-01~~	~~1.7E-01~~	~~1.7E-01~~	~~5.6E+00~~
	~~Inhalation~~	~~Adult~~	~~2.2E-02~~	~~2.3E-02~~	~~1.5E-02~~	~~2.3E-02~~	~~2.3E-02~~	~~1.6E-01~~	~~3.0E-02~~	~~1.9E-02~~
		~~Teen~~	~~2.3E-02~~	~~2.4E-02~~	~~2.1E-02~~	~~2.5E-02~~	~~2.5E-02~~	~~2.1E-01~~	~~3.6E-02~~	~~1.9E-02~~
		~~Child~~	~~2.2E-02~~	~~2.2E-02~~	~~2.9E-02~~	~~2.3E-02~~	~~2.4E-02~~	~~2.4E-01~~	~~3.3E-02~~	~~1.7E-02~~
		~~Infant~~	~~1.4E-02~~	~~1.4E-02~~	~~2.0E-02~~	~~1.5E-02~~	~~1.5E-02~~	~~2.2E-01~~	~~2.1E-02~~	~~9.9E-03~~
~~MEI~~	~~All~~	~~Adult~~	~~1.9E-01~~	~~1.9E-01~~	~~1.9E-01~~	~~1.9E-01~~	~~1.9E-01~~	~~3.4E-01~~	~~2.0E-01~~	~~5.6E+00~~
		~~Teen~~	~~1.9E-01~~	~~2.0E-01~~	~~1.9E-01~~	~~2.0E-01~~	~~2.0E-01~~	~~3.8E-01~~	~~2.1E-01~~	~~5.6E+00~~
		~~Child~~	~~1.9E-01~~	~~1.9E-01~~	~~2.0E-01~~	~~1.9E-01~~	~~1.9E-01~~	~~4.1E-01~~	~~2.0E-01~~	~~5.6E+00~~
		~~Infant~~	~~1.8E-01~~	~~1.8E-01~~	~~1.9E-01~~	~~1.9E-01~~	~~1.9E-01~~	~~3.9E-01~~	~~1.9E-01~~	~~5.6E+00~~
	~~Max~~		~~1.9E-01~~	~~2.0E-01~~	~~2.0E-01~~	~~2.0E-01~~	~~2.0E-01~~	~~4.1E-01~~	~~2.1E-01~~	~~5.6E+00~~
	~~Group~~		~~Teen~~	~~Teen~~	~~Child~~	~~Teen~~	~~Teen~~	~~Child~~	~~Teen~~	~~Teen~~

~~Note: In the first four rows for the MEI, MEI doses are obtained by conservatively summing the residence total external dose with the residence inhalation even though they are not all at the same location.~~

Location	Pathway		Annual Dose Rate (mrem/yr)			
			Total Body	Thyroid	Maximum Organ	Maximum Organ
Site Boundary (0.2 miles, NE)	External	Plume	5.7E-02	5.7E-02	1.8E-01	Skin
		Ground	8.0E-02	8.0E-02	1.4E-01	
		Subtotal	*1.4E-01*	*1.4E-01*	*3.2E-01*	
	Inhalation	*Subtotal*	*4.3E-01*	*5.1E-01*	*5.2E-01*	Thyroid
	Ingestion	*Subtotal*	*N/A[a]*			
		TOTAL	**5.7E-01**	**6.5E-01**	**5.2E-01**	Thyroid
Maximum Exposed Individual (0.5 miles, SSE)	External	Plume	1.5E-01	1.5E-01	4.9E-01	Skin
		Ground	4.0E-02	4.0E-02	6.8E-02	
		Subtotal	*1.9E-01*	*1.9E-01*	*5.6E-01*	
	Inhalation	*Subtotal*	*1.2E+00*	*1.5E+00*	*1.5E+00*	Thyroid
	Ingestion	*Subtotal*	*N/A[b]*			
		TOTAL	**1.4E+00**	**1.7E+00**	**1.5E+00**	Thyroid
Analytical Nearest Resident (1.1 miles, E)[c]	External	Plume	5.2E-02	5.2E-02	1.7E-01	Skin
		Ground	2.2E-02	2.2E-02	3.8E-02	
		Subtotal	*7.4E-02*	*7.4E-02*	*2.1E-01*	
	Inhalation	*Subtotal*	*4.6E-01*	*5.5E-01*	*5.5E-01*	Thyroid
	Ingestion	*Subtotal*	*6.5E-01[d]*	*8.2E-01[d]*	*8.5E-01[d]*	Thyroid
		TOTAL	**1.2E+00**	**1.4E+00**	**1.6E+00**	Thyroid

[a] The ingestion pathway at the site boundary is not applicable; there is no production of food products at the site boundary.
[b] The MEI location is within the boundary of the ETTP; the ingestion pathway at the MEI location is not applicable; there is no production of food products inside the boundary of the ETTP.
[c] The nearest residence is NNW at 1.1 miles from the reactor; dose is calculated at 1.1 miles from the reactor in the direction of maximum X/Q without decay (see Table 4.8-20) which was also the direction of maximum deposition.
[d] The ingestion pathway at the site boundary does not include dairy production; there is no identified production of dairy products in the area of the site. The cultivation of vegetables and livestock for the ingestion pathways considered are assumed to occur at the location of the analytical nearest resident.

4.9 WASTE MANAGEMENT

4.9.1 Sources and Types of Waste Created

The following sections discuss nonradioactive, nonhazardous hazardous, and radioactive wastes associated with the facility during construction, operation, and decommissioning.

4.9.1.1 Construction

During the construction phase, the majority of waste generated would be construction and demolition (C&D) waste. Local solid waste haulers would be contracted to dispose of C&D waste in permitted local landfills. Such waste would include material produced directly or incidentally by C&D. Examples of which would include scrap lumber, bricks, sandblast grit, glass, wiring, non-asbestos insulation, roofing materials, building siding, scrap metal, concrete with reinforcing steel, nails, wood, electrical wiring, rebar, concrete, excavated dirt, tree stumps, rubble, and similar construction and demolition wastes. Kairos Power would secure the necessary contracts for proper disposal of C&D wastes.

Soils excavated for the purpose of construction would be stockpiled on site and managed to limit water and wind erosion as well as impacts from runoff. Sanitary wastes would be picked up on a routine schedule and transported to a local sanitary waste landfill. Only small amounts of hazardous waste would be generated during construction. These could include waste oils, degreasers, etc. No radioactive waste would be generated during construction. However, as the site was previously the site of a gaseous diffusion plant and it has undergone a radiological remediation and release, there is a potential for encountering radioactive materials that are not related to the construction and operation of the Hermes reactor. As the facility is a relatively small industrial facility, the impacts of waste management from construction activities would be SMALL.

4.9.1.2 Operation

Facility operations would generate municipal solid waste commonly known as “trash” or “garbage” which would consists of food waste, plastic film, paper waste, and food product packaging waste. General office and industrial supplies waste would also be generated at the facility. Solid wastes generated in conjunction with operation of the facility would be managed in accordance with applicable state and federal environmental regulations and disposed in approved and licensed disposal facilities. Solid wastes (e.g., office waste, recyclables) would be collected and stored temporarily onsite and disposed of or recycled locally. The waste would be transported from the site by a local sanitary waste entity without being treated or packaged. These activities would be typical for a general commercial facility within the Oak Ridge area.

While the facility would be registered as a Small Quantity Generator, there would be no significant sources of hazardous waste during facility operations. However, all hazardous wastes, including universal wastes, would be managed in accordance with a written waste management plan that conforms to all State and Federal regulations regarding the storage and disposal of hazardous waste.

Radioactive waste that would be generated by the operation of the facility, include but are not limited to:

- Spent fuel pebbles
- Flibe
- ~~Nitrate salt~~
- Filters and cold traps
- Routine waste from maintenance activities

4.10 TRANSPORTATION

Transportation of nuclear and nonnuclear materials would be required during construction, operation, and decommissioning of the facility. These materials would include construction materials, construction and demolition wastes, new nuclear fuel, ~~nitrate salts and~~ Flibe ~~salts~~salt, radioactive waste, and routine nonradioactive waste. The following subsections describe the environmental consequences of transportation of these materials within the context of the requirements of Section 19.4.10, *Transportation*, of the ISG for NUREG-1537. The guidance states that the following should be presented in the ER:

- Transportation mode (i.e., truck, plane, rail, or barge) and projected destinations of the radioactive waste and nonradioactive waste
- Estimated transportation distance from the originating site to the projected destinations of the radioactive waste and nonradioactive waste
- Treatment and packaging for radioactive and nonradioactive wastes
- Calculated radiological dose to members of the public and workers from incident-free transportation scenarios

The NRC has generically evaluated the environmental impacts of the transportation of fuel and radioactive waste in Table S-4 of 10 CFR 51.52 for light water reactor (LWR) fuel that meet certain entry conditions specified in 10 CFR 51.52(a). Section 10 CFR 51.52 discusses LWRs but does not provide direction on evaluating transportation of nuclear fuel and waste to and from non-LWRs in an ER. However, the applicant and the NRC must still evaluate transportation. As such, to provide additional guidance to non-LWR license applications, the NRC, through Pacific Northwest National Laboratory, prepared *Environmental Impacts from Transportation of Fuel and Wastes to and from Non-LWRs* (PNNL-29365) (Reference 1).

While considering the information requested for non-power reactors in Section 19.4.10 of the ISG for NUREG-1537 and the additional guidance provided in PNNL-29365 for non-LWR license applications, transportation impacts are assessed in the following sections broken down by the phase of the reactor's life:

- Construction
  - Nonradioactive material and waste shipments
- Operation
  - Nonradioactive material and waste shipments
  - New unirradiated fuel shipments
  - LLRW shipments
- Decommissioning
  - Nonradioactive waste shipments
  - Spent fuel shipments
  - LLRW shipment

4.10.1 Impacts from Construction

Construction materials are expected to be transported to the facility primarily via truck; however, rail lines are accessible in close proximity to the site. The impacts from the increased traffic from the construction phase of the project on other resources such as air quality, noise, etc. are described in

other sections of this ER and the direct and indirect impacts from the construction-related traffic would be SMALL.

4.10.2 Impacts from Operation

During the operation period, which includes startup activities, the facility would receive shipments of new nuclear fuel and coolant salt~~s~~. When shipped to the site, the coolant salt~~s~~ would be nonradioactive; however, ~~both~~ the ~~primary~~ salt coolant Flibe ~~and the intermediate (for heat transfer) nitrate salt coolant~~ would become radioactive. There is sufficient storage capacity onsite for storage of the radioactive Flibe wastes, which would be allowed to cool, solidify, and likely held until decommissioning. As such, transportation of Flibe waste is described in Section 4.10.3. If Flibe wastes were shipped prior to decommissioning, impacts would be bound by those described in Section 4.10.2.3. Similarly, there would be sufficient onsite storage capacity for spent TRISO fuel and spent fuel transportation is also discussed in Section 4.10.3.

The following sections describe the impacts from transportation of materials to and from the facility during operations. Collectively, these impacts would be SMALL.

4.10.2.1 Transportation of Unirradiated Fuel

In the United States, low-enriched nuclear fuel for commercial light-water nuclear power plants is manufactured at either one of three facilities located in South Carolina, North Carolina, and Richland, Washington. A decision on the sourcing of fuel has not been made at this time. Fuel may be provided from either existing manufacturers or manufactured by Kairos Power at a nearby facility. For evaluation purposes it is assumed new TRISO fuel would be shipped by truck from Richland, WA. Richland, WA is the location of the furthest nuclear fuel manufacturer in the U.S. from the Kairos site.

Before startup, the facility would receive an initial shipment of fuel and then periodic shipments thereafter of fuel over the reactor's estimated 10-year licensed operating life. The fuel loading for each 4.0 centimeter-diameter fuel pebble is estimated at 6 grams of uranium (6gU/pebble). For Hermes, at 35 MW_{th} and 6 percent fissions per initial (heavy) metal atom (FIMA), 38,800 pebbles will be consumed by the Hermes Reactor each year. Since the life of the Hermes Reactor is estimated to be 10 years, a total of 388,000 pebbles would be consumed.

Fresh fuel would likely be shipped from the manufacturer in appropriately certified containers such as Versa-Pac (VP) containers manufactured by DAHER Group, Transport Logistics International, Inc. (Reference 2). There are two VP sizes available which are certified by the DOT and configured for shipment of uranium oxides, uranium metal, uranyl nitrate crystals, and other uranium compounds such as TRISO fuel, which is specifically mentioned in the certification (Reference 3). The VP-110 is a 110-gallon drum-like package and the VP-55 is a smaller 55-gallon drum-like package. Both packages meet the specifications provided in 49 CFR 173.417 for fissile material package. If the VP-55 is used, each would contain approximately 350 fuel pebbles (Reference 2). The VP-55 has an outer diameter for approximately 23.2 inches and a height of 34.8 inches and has maximum gross weight limit of 750 pounds (Reference 3).

Fuel would be transported to the facility either periodically or once per year given the relatively small quantity involved. Approximately 111 containers of new fuel would be shipped each year consisting of 350 fuel pebbles per VP-55 (Reference 2). A standard highway shipping weight limit of 80,000 pounds gross weight and approximately 40,000 pounds cargo weight for a 40-foot container is maintained. Therefore, at 750 pounds per fuel container containing 350 fuel pebbles, approximately three trucks would be needed to transport a year's supply of fuel when operating at 35 MWth.

Class B waste would be shipped approximately 1,200 miles to Waste Control Specialists' LLRW disposal site located west of Andrews, Texas. Class A waste would be shipped to Waste Control Specialists or approximately 1,800 miles to Energy*Solutions*' LLRW disposal site located near Clive, Utah.

Prior to shipment, radioactive material would be packaged to meet the DOT and NRC requirements for the transportation of radioactive materials. Class A and Class B waste from routine operations would be packaged and in a solid form. LLRW packaging for transportation would conform with the requirements of 49 CFR 173, Subpart I, *Class 7 (Radioactive) Materials*, and 10 CFR Part 71, *Packaging and Transportation of Radioactive Material*. Class A waste would likely be transported as Low Specific Activity waste and packaged in an industrial package (IP) Type IP-1. IP-1 strong, tight containers would likely include waste boxes (e.g., B-12 or B-25 boxes) and 55-gallon waste drums. Type A and Type B packages would likely be necessary to transport higher activity Class B waste. These packages have been demonstrated to withstand a series of tests, when subjected to normal conditions of transport and hypothetical accident conditions, without releasing the contents.

In accordance with 49 CFR 173.427(a)(1), the external dose rate on a package of Low Specific Activity waste may not exceed an external radiation dose rate of 1 rem/hr at 10 feet from the unshielded material in the package. The dose on contact with the package would not exceed 0.2 rem/hr unless the conveyance is transported by exclusive use shipment. For exclusive use shipments, the dose on contact with the package would not exceed 1 rem/hr provided the conditions in 49 CFR 173.441(b)(1) are met.

LLRW generated from the facility would meet the conditions of 10 CFR 51.52(a)(4) and the number of trucks of radioactive waste would be less than 1 per day (spent fuel is not expected to be shipped during normal operations). Therefore, the environmental impacts under normal conditions of transport, and possible accidents, would not be greater than the impacts set forth in Table S-4 of 10 CFR 51.52. Given that the majority of LLRW shipped from the facility would be in solid form and packaged according to DOT regulations, and the number of radioactive waste shipments and the volumes and activities of the waste is bounded by what is provided in WASH-1238, the impacts from the transportation of LLRW would be SMALL.

4.10.2.4 Transportation of Nonradioactive Materials and Hazardous Waste

General office supplies and industrial supplies supporting the maintenance and day-to-day operations of the facility would be transported to the site. Office waste is generated at the site and transported from the site to a local sanitary waste facility without being treated or packaged. These activities would be typical for a general commercial facility within the Oak Ridge area. The associated incident-free transportation activities do not have an adverse impact on the environment, workers, or the members of the public. There would be no significant shipments of hazardous waste from the facility.

The Flibe reactor coolant ~~and the nitrate salt coolant used to transfer heat from the reactor system to the heat rejection system~~ would be shipped to the facility prior as a solid to startup and during routine operations. Approximately 20 tons of Flibe would be transported via truck in 20 initial 1-ton shipments. Twenty additional 1-ton shipments are expected to be necessary before the end of the first 2 years of operation. ~~Approximately 200 tons of nitrate salt would be needed for reactor startup. This nitrate salt would be transported in 28 shipments, approximately 7 tons each. An additional 200 tons of nitrate salt would be needed annually.~~ The Flibe ~~and nitrate salts are~~ is radioactive at the end of ~~their~~ its useful life. The Flibe is expected to be stored onsite until decommissioning. ~~Some nitrate salt is expected to be disposed during operations (see Section 2.6.1.1).~~

The Flibe would be shipped in accordance with DOT regulations for transportation of hazardous materials with the following designations (Reference 9):

- Hazard Class: 6.1, Poison
- Identification Number: UN1566
- Packaging Group: II
- Marine Pollutant

~~The nitrate salt, a combination of potassium nitrate and sodium nitrate, would be shipped in accordance with DOT regulations for transportation of hazardous materials with the following designations (Reference 10, Reference 11):~~

- ~~Hazard Class: 5.1, Oxidizer~~
- ~~Identification Number: UN1486 (potassium nitrate) and UN1498 (sodium nitrate)~~
- ~~Packaging Group: III~~

Transportation of the salt~~s~~ to the facility and transportation of nonradioactive materials, nonradioactive waste, and hazardous waste from the facility would be conducted in accordance with applicable Federal and State DOT transportation requirements. As such, the transportation of nonradioactive materials, nonradioactive waste, and hazardous waste associated with the operation of the facility would be SMALL.

4.10.2.5 Incident-Free Radiological Doses

The ISG for NUREG-1537 requests that the applicant assess the radiological impacts of incident-free transportation. The incident-free radiological doses are determined for members of the public and the workers that are involved with the transportation of the radioactive wastes (transportation workers and handling workers). As noted previously, the NRC has determined during its analysis of nuclear power early site permit and construction and operation permit applications that the impacts from transportation accidents involving radioactive waste would be SMALL (Reference 5, Reference 6, Reference 7).

During incident-free transportation of radioactive materials, a radiological dose results from exposure to the external radiation field that surrounds the transportation vehicle. The population dose is a function of the number of people exposed, their proximity to transportation vehicle, their length of time of exposure, and the intensity of the radiation field surrounding the containers. As such, it is independent of the specific radionuclide makeup of the material being transported. For long routes, the average population densities are also similar meaning the primary factor in dose from transportation is distance traveled.

The Tennessee Valley Authority (TVA) recently prepared an ER for the CRN Site Early Site Permit Application. This ER evaluated the dose impacts from incident free transportation for the following 3 transportation scenarios which are considered to be bounding for Hermes reactor project:

- New fuel shipped from Richland, Washington to Oak Ridge, Tennessee
- Spent nuclear fuel shipped from Oak Ridge, Tennessee to Yucca Mountain, Nevada
- LLRW shipped from Oak Ridge, Tennessee to WCS in Texas

Given that dose impacts from incident-free transportation are based on the external dose rate of the conveyance and the distance of the shipment and the TVA shipments were modeled using RADTRAN Version 6.5 at the DOT dose rate limits for exclusive use shipments provided in 49 CFR 173.411(b)(3), the TVA analyses for a single shipment of spent nuclear fuel and LLRW from the CRN site are directly applicable to shipments from the facility and are also assumed to have the same external dose rates. Table 4.10-1 provides the single shipment dose impact from these shipments. Route distances in Table 4.10-1 are approximated from the closest routes provided by Google.com.

- Changes in the mix of types of waste categories shipped

Considering the above factors, the facility decommissioning would be considered bounded by the NRC evaluation as the facility's decommissioning approach would not increase the magnitude of the factors evaluated.

- Due to the small size of the facility, its reactor, and support systems, the amount of waste shipped offsite would be less than the amount of waste generated from large PWRs and BWRs evaluated by the NRC.
- It is expected that radioactive waste, with the exception of spent fuel, would be transported by truck from its facility in the eastern United States to a waste disposal site in the western United States consistent with the analysis conducted by the NRC.
- Most decommissioning waste would be consistent with the waste and waste categories evaluated by the NRC. However, the decommissioning of the facility would include the transportation of radioactive Flibe~~ and nitrate salts~~ which ~~were~~ was not considered in the NRC analysis. ~~These wastes~~This waste would be solid at the time of transportation and would be classified as Class C waste or lower with currently available certified waste transportation packaging and an available disposal site.

Due to the small size of the facility, its reactor, and support systems, the facility decommissioning is considered to be bounded by the NRC assessment in NUREG-0586 of large Pressurized Water Reactors and Boiling Water Reactors. The NRC also concluded decommissioning of non-LWRs (i.e., fast breeder reactor and high-temperature gas reactor) would be bounded by their analysis. Therefore, the impacts from the transportation of radioactive waste from decommissioning the facility would be SMALL.

4.10.3.3 Transportation of Nonradioactive Materials and Waste

The NRC conclusion that transportation of decommissioning wastes would be SMALL included additional nonradiological impacts on public health and safety from transportation accidents associated with transportation of uncontaminated material. The NRC also concluded that the number of shipments into the decommissioning facility would be much smaller than the number of shipments from the facility. As such, the overall impact from the transportation of nonradioactive materials and waste would be SMALL.

4.10.4 References

1. Pacific Northwest National Laboratory. "Environmental Impacts from Transportation of Fuel and wastes to and from Non-LWRs," PNNL-29365. September 2020.
2. Oak Ridge National Laboratory. "Advanced Reactor Safeguards: Nuclear Material Control and Accounting for Pebble Bed Reactors." ORNL/SPR=2020/1849. January 2021.
3. U.S. Department of Transportation. Competent Authority Certification for a Type Fissile Radioactive Materials Package Design Certificate USA/9342/AF-96, Revision 5. September 24, 2021.
4. Atomic Energy Commission. "Environmental Survey of Transportation of Radioactive Material to and from Nuclear Power Reactors." WASH-1238. December 1972.
5. U.S. Nuclear Regulatory Commission. "Final Environmental Impact Statement for Combined Licenses for Virgil C. Summer Nuclear Station, Units 2 and 3." NUREG 1939, Volume 1. April 2011.

6. U.S. Nuclear Regulatory Commission. "Final Supplemental Environmental Impact Statement for Combined License (COLs) for Vogtle Electric Generating Plant Unit 3 and 4." NUREG 1947. March 2011.

7. U.S. Nuclear Regulatory Commission. "Environmental Impact Statement for an Early Site Permit (ESP) at the Clinch River Nuclear Site." NUREG-2226, Volume 1. April 2019.

8. U.S. Department of Defense. "Construction and Demonstration of a Prototype Mobile Microreactor, Environmental Impact Statement." Draft. September 2021.

9. Kairos Power LLC, 2021. Flibe Safety Data Sheet. Issued April 2, 2021.

10. ~~SQM, 2014. Sodium Nitrate Safety Data Sheet. Issued January 2014.~~Not Used

11. ~~SQM, 2015. Potassium Nitrate Safety Data Sheet. Issued March 2015~~Not Used

12. Tennessee Valley Authority. "Clinch River Nuclear Site Early Site Permit, Part 3, Environmental Report." Rev. 2. March 16, 2019.

13. U.S. Department of Energy. "Estimating Radiation Risk from Total Effective Dose Equivalent (TEDEs)." ISCORS Technical Report No. 1. August 9, 2002.

4.11 POSTULATED EVENTS

This section describes the postulated events that are within the design basis of the facility and a maximum hypothetical accident (MHA) that bounds the radiological consequences of the postulated events.

4.11.1 Event Categories

The events are grouped according to type and characteristics of the events. The event categories are:

- MHA
- Insertion of Excess Reactivity
- Salt Spills
- Loss of Forced Circulation (includes a loss of normal electric power)
- Mishandling or Malfunction of Pebble Handling and Storage System
- Radioactive Release from a Subsystem or Component
- ~~Primary Heat Exchanger Tube Break~~
- General Challenges to Normal Operation
- Internal and External Hazard Events

For postulated events, figures of merit for each event category provide surrogate metrics which demonstrate that the resulting dose is bounded by the dose consequences of the MHA analysis as described in KP-TR-018-P, "Transient Methodology Technical Report" (Reference 1). Acceptance criteria for these figures of merit represent design limits that ensure the MHA is bounding. The MHA dose consequences are evaluated in PSAR Section 13.2.

4.11.2 Event Descriptions

4.11.2.1 Maximum Hypothetical Accident

The MHA is a heat up event where hypothesized conditions result in a conservatively analyzed release of radionuclides. The radioactive material that would be at risk for release in the MHA includes radionuclides contained in the fuel, the radionuclides circulating in the Flibe, and the radioactive material at risk for release distributed within the primary system (i.e., steel structures and graphite). Hypothetical temperature histories are applied to the system, along with the non-physical assumptions described in PSAR Section 13.2, to drive radionuclide movement and bound the system response to other postulated events. The MHA analysis is consistent with the fission product release accident analysis required for the 10 CFR 100.11 determination of exclusion area, low population zone, and population center distances. The MHA is a bounding event with conservative radionuclide transport assumptions that challenge the important radioactive retention features of the functional containment.

4.11.2.2 Insertion of Excess Reactivity

The insertion of reactivity event described in PSAR Section 13.1 is initiated by a control system error or an operator error that causes a continuous withdrawal of the highest worth control element at maximum control element drive speed. The reactivity insertion is detected by the Reactor Protection System due to a high flux or a high coolant temperature, initiating control and shutdown elements insertion, fulfilling the reactivity control function. The decay heat removal system limits reactor temperature and fulfills the heat removal function.

The insertion of excess reactivity category consists of other insertion of reactivity events, including:

- Reactivity insertion events caused by fuel loading error (e.g., errors in rate of fresh fuel injection, incorrect order of fuel insertion)

- Reactivity insertion events with concurrent pump trip
- Reactivity insertion events with normal heat rejection available
- Local phenomena leading to ramp insertion of reactivity
- Change in reactivity due to shifting of graphite reflector blocks
- Venting of gas bubbles accumulated in the active core
- Local phenomena leading to step insertion of reactivity
- Local negative reactivity anomaly (e.g., inadvertent single element insertion, cover gas injection)
- Reactivity insertion events during startup
- Increase in heat removal events (e.g., ~~primary salt pump overspeed, intermediate pump overspeed~~heat rejection blower overspeed)

The methods to ensure that this event category is bounded by the MHA are provided in Reference 1.

4.11.2.3 Salt Spills

The salt spill postulated event described in PSAR Section 13.1 initiates when a hypothetical double-ended guillotine break in the primary heat transport system piping during normal operation causes a Flibe spill. The salt spill would be detected by the reactor protection system due to low reactor coolant level, which initiates control and shutdown elements insertion, fulfilling the reactivity control function. The decay heat removal system limits reactor temperature and fulfills the heat removal function. The primary salt pump trips to limit the amount of spilled Flibe. ~~The intermediate salt pump would be tripped concurrently to ensure a positive pressure differential between the primary and intermediate loops.~~The RPS trips the heat rejection blower to limit the amount of air ingress following postulated heat rejection radiator (HRR) tube breaks. Radionuclides from the coolant circulating activity in the broken pipe are released into the facility air when aerosols are generated from the coolant that exits the pipe. The spilled Flibe forms a Flibe pool, and radionuclides would be released through evaporation until the top surface of the Flibe pool is solidified.

The salt spill category consists of other salt spill events, including:

- Spurious draining and smaller leaks from the primary heat transport system
- Leaks from other Flibe containing systems and components (e.g., inventory management system fill/drain tank, inventory management system piping, chemistry control system piping)
- Leaks up to the hypothetical double-ended guillotine primary salt piping break size
- Mechanical impact or collision events involving Flibe containing structures, systems, and components (except the vessel)
- Single or multiple HRR tube(s) break
- ~~Leaks from the primary heat rejection system that contains a non-Flibe coolant, which may contain non-zero amount of Flibe from heat exchanger leaks~~

The methods to ensure that this event category is bounded by the MHA are provided in Reference 1.

4.11.2.4 Loss of Forced Circulation

The postulated loss of forced circulation event described in PSAR Section 13.1 initiates with the seizure of the primary salt pump. The reduced flow would be detected by the reactor protection system, which initiates control and shutdown elements insertion, fulfilling the reactivity control function. The decay heat removal limits reactor temperature and fulfills the heat removal function.

The loss of forced circulation category includes other loss of circulation events, including:

- Blockage of flow path external to the reactor vessel in the primary heat transport system
- Spurious pump trip signal

- Shaft fracture
- Bearing failure
- Pump control system errors
- Supply breaker spurious opening
- Loss of net-positive suction head (e.g., pump overspeed, low level)
- Loss of normal electrical power
- Flibe freezing inside HRR
- Loss of normal heat sink

The methods to ensure that this event category is bounded by the MHA are provided in Reference 1.

4.11.2.5 Mishandling or Malfunction of Pebble Handling and Storage System

The postulated PHSS malfunction described in PSAR Section 13.1 is a break in a transfer line when pebbles are removed from the core, resulting in a spill of pebbles within the transfer line to the room. This condition would be detected by the reactor protection system, which trips the pebble handling and storage system to stop pebble movement. The design of the pebbles, the pebble handling and storage system, and the surrounding room ensure there would be no inadvertent criticalities, structural damage to pebbles, or overheating. The heat-up of the pebbles in the pebble handling and storage system mobilizes the Flibe accumulated on the piping.

The pebble handling and storage malfunction category consists of other pebble handling and storage malfunctions, including:

- Transfer line break when pebbles are inserted into empty core
- Transfer line break when pebbles are inserted into the core at power
- Transfer line break when pebbles are transferred to storage canisters
- Mishandling of fuel outside the reactor (e.g., containment box, at the material balance areas and key measure points)

The methods to ensure that this event category is bounded by the MHA are provided in Reference 1.

4.11.2.6 Radioactive Release from a Subsystem or Component

A radioactive release from a subsystem or component could result from the failure of a system or component containing radioactive material. However, the limiting event for this category is assumed to be a seismic event that results in the failure of systems containing radioactive material that are not qualified to maintain structural integrity in a safe shutdown earthquake. The only figure of merit for this event is the amount of radioactive material contained in subsystems and components. To ensure that this event group is bounded by the MHA, there is a design requirement on the amount of radioactive material at risk for release in subsystems and components to remain below the amount of radioactive material at risk for release assumed in the MHA. The systems expected to accumulate radionuclides as a function of operation include:

- Tritium management system
- Inert gas system
- Chemistry control system (including filters)
- Inventory management system
- ~~Primary heat rejection system~~

4.11.2.7 ~~Primary Heat Exchanger Tube Break~~Not Used

~~The complete break of a primary heat exchanger tube event is described in PSAR Section 13.1. The positive pressure difference maintained between the primary loop and intermediate loop forces the primary Flibe coolant into the intermediate coolant loop and mixes with the secondary nitrate coolant. The tube break would be detected by the reactor protection system due to a drop in the reactor coolant level, which initiates control and shutdown elements insertion, fulfilling the reactivity control function. The reactor protection system also initiates an intermediate salt pump trip and a primary salt pump trip to limit nitrate ingress into the reactor vessel. The reactor decay heat removal system performs its function to limit reactor temperature and fulfill the heat removal function. This event category also includes a smaller leak in a primary heat exchanger tube.~~

~~The methods to ensure that this event category is bounded by the MHA are provided in Reference 1.~~

4.11.2.8 Internal and External Hazards

The portions of the design relied upon to perform safety functions are protected from the internal and external hazard levels defined in PSAR Chapter 2. Events in this category are bounded by or considered as initiators in other event categories. The internal hazard events in the design basis include:

- Internal fire
- Internal water flood

The external hazard events in the design basis include:

- Seismic event
- High wind event
- Toxic release
- Mechanical impact or collision with structures, systems, and components (SSCs)
- External flood

Engineered safety features contained within areas protected from or able to withstand the intensity of the hazard loading, for hazard events initiated outside those areas (e.g., fire) maintain their capability to bring the plant to a safe state following a postulated event. The SSCs within those areas would be designed to withstand an upper bound hazard loading intensity associated with the area (e.g., SSCs can withstand an upper bound heat load and the associated area is equipped with fire detection and suppression systems to limit the heat load).

For SSCs not protected with such an area, the effects are considered in the event category described in Section 4.11.2.6.

4.11.2.9 General Challenges to Normal Operation

This category of events includes challenges to normal operation not covered by another event category that result in an automatic or manual shutdown of the plant. Disturbances, including an inadvertent operator action, are detected directly or indirectly by the reactor protection system, which initiates control and shutdown elements insertion, fulfilling the reactivity control function. The decay heat removal system would perform its function to limit reactor temperature and fulfill the heat removal function.

Grouped events include spurious trips due to control system anomalies, operator errors, and equipment failures. This event group also includes scenarios where operators choose to manually shut down the plant. Also included are faults in the reactivity control and shutdown system, electrical system, primary heat rejection subsystem, and other plant systems that would challenge normal operations.

4.13.8 Human Health

The geographic area of analysis for evaluation of cumulative effects on human health is the same as that used in Section 4.8 and includes the 185 acres within the site boundary and the 5-mile region surrounding the site. As discussed in Sections 4.8.1 and 4.8.2, impacts from operation of the facility would have a SMALL impact on human health.

Table 4.13-1 identifies recent past, present, and reasonably foreseeable future actions within the geographic extent of analysis that can be assessed to determine cumulative effects on human health. Relevant "other actions" that are considered in this cumulative impacts analysis are limited to the ORR actions including operations and/or new construction of the Environmental Management Waste Management Facility, the Sludge Processing Mock Facility, Uranium Processing Facility, Mercury Treatment Facility, the Spallation Neutron Source, and the High Flux Isotope Reactor; and future construction and operation at the CRN site, the Coqui Pharma site, and the Kairos Power Nuclear Fuel Fabrication Facility.

4.13.8.1 Nonradiological Impacts

Construction of any facility includes potential hazards to workers typical of any construction site. Normal construction safety practices would be employed to promote worker safety and reduce the likelihood of worker injury during construction. Therefore, because controls are in place to limit injuries and illnesses and occupational impacts rarely reach beyond the construction site, cumulative occupational hazards from construction would be SMALL.

Potential nonradiological public health hazards pertaining to the construction and operation of facilities the 5-mile region surrounding the site are associated with routine emissions and discharges as well as accidental spills/releases.

To minimize potential exposure to the public, control systems are in place to limit emissions in accordance with federal, state, and local requirements. These controls include conveyance of wastewater to appropriate approved wastewater treatment facilities, discharges to Waters of the United States in accordance with NPDES permits, implementation of Spill Prevention Control and Countermeasure Plans, and air emission controls Although, environmental contamination contributions to water resource and air from past operations at ORR contribute to a MODERATE cumulative impact to human health; however, the incremental contribution to cumulative impacts from the Proposed Action would be SMALL

4.13.8.2 Radiological Impacts

As described in Section 4.8.2, the radiological impacts from construction and operation of the Hermes reactor would be SMALL. Specifically, the estimated total body dose to the ~~hypothetical~~ analytical ~~MEI~~ nearest resident from gaseous effluents and direct radiation during operation combined would be ~~1.27.8~~2.2 mrem/yr (2.4 for the MEI in an unrestricted area). For analysis of cumulative impacts, the geographic area of interest considered was 5 miles beyond the site boundary. Table 4.13-1 summarizes past, present, and future projects and actions that could contribute to cumulative effects. Those listed that have a potential to contribute to cumulative radiation exposures include the past operations at ORR, the existing and proposed ORR facilities (Y-12, ORNL, and disposal sites); the existing Energy*Solutions* Bear Creek Facility, and proposed operations at the CRN site, the Coqui Pharma site, and the Kairos Power Nuclear Fuel Fabrication Facility.

As noted in Section 3.8.4, operations on the ORR release small quantities of radionuclides to the environment. In the 2020 ORR Annual Site Environmental Report, detailed analysis of the effective dose received by the MEI from air pathways was determined to be 0.4 mrem/yr. The effective dose to the

MEI from water, including drinking, bathing, irrigating, recreating, and fish consumption, was determined to be 2 mrem/yr. The effective dose from consumption of wildlife harvested on the ORR, including turkeys, geese, and deer, was determined to be 0.07 mrem/yr. Combined, the annual dose to the ~~hypothetical~~ analytical ~~MEI~~ nearest resident from normal operations at ORR is ~~3~~ ~~10.3~~4.7 mrem/yr (4.9 for the MEI in an unrestricted area) (Reference 44). For the hypothetical nearest resident, this dose~~This~~ is approximately ~~1~~ 0.83 percent of the average background radiation dose in ~~the United States~~Tennessee (0.87 percent for the MEI in an unrestricted area).

There are several non-DOE facilities on or near the ORR that could also contribute to radiation doses to the public. In 2017, DOE requested information from these facilities regarding their potential radiation doses to members of the public, and fifteen facilities responded with information about their dose contributions (Reference 45). Ten facilities had no radiological emissions. Three facilities reported annual doses from airborne releases with annual doses of 0.4 mrem, 0.21 mrem, and < 10 mrem. Doses from direct radiation ranged from none to 2 mrem based measurements at the facility and immediate surrounding. Therefore, DOE estimated that annual doses to members of the public from air and water emissions and external radiation from both non-DOE and DOE sources on and near the ORR were less than 100 mrem/yr. It is assumed Energy*Solutions* Bear Creek Facility was one of the responding facilities and its contribution to the cumulative dose would be a fraction of the less than 100 mrem estimated by DOE.

The proposed nuclear power generation at the CRN site and the radiopharmaceutical production would contribute additional radiation to the surrounding area. The CRN site ER estimates that the MEI receiving dose from up to four operating small modular reactors at the site would be 11 mrem/yr (Reference 46). The annual dose to the MEI from the SHINE Medical Technologies medical isotopes production facility located in Wisconsin, considered a reasonable surrogate for the proposed Coqui Pharma medical isotopes production facility, was estimated at 9 mrem/yr (Reference 47). Even if it is conservatively assumed that an individual could be exposed to a total dose based on adding the ORR's total dose estimate of 3 mrem/yr, the CRN site estimate of 11 mrem/yr, the anticipated Coqui Pharma dose of 9 mrem/yr, and the other non-DOE sources evaluated by the DOE, the cumulative would be less than 100 mrem/yr. Accordingly, cumulative radiological impacts to members of the public during operation would be SMALL and the incremental contribution to cumulative impacts from the Proposed Action would also be SMALL.

4.13.9 Waste Management

All regional construction, operation, and decommissioning projects will have an impact on cumulative waste management and the region of influence is dependent on the type of waste and the available disposal locations. Due to its relatively small size and operating staff, the contribution of the Hermes reactor project on the local (multi-county) nonradioactive and nonhazardous C&D waste and general sanitary waste (i.e., "garbage") management resources and disposal capacity would be SMALL and the percentage of the contributed when considering other current and proposed projects would also be SMALL. With respect to hazardous waste, construction, operation, and decommissioning of the Hermes reactor will have a negligible effect on the cumulative impact on regional (multi-state) hazardous waste management and disposal resources from regional projects. For radioactive waste generated during operation and decommission, such disposals are only available at a few existing facilities that are located well outside the local region. Given the volumes of LLRW received at these facilities from industries such as the nuclear power industry (93 operating commercial reactors in 2021), medical industry, research and development, the operation and future decommissioning of a single non-power reactor will not contribute significantly to LLRW management and disposal resources. Likewise, each of the other proposed projects and existing non-DOE facilities that generate LLRW within 5 miles of the site will have

only a small effect on the nation-wide LLRW management and disposal infrastructure. Most hazardous and radioactive waste generated at ORR is managed at ORR treatment and disposal facilities and does not contribute to the cumulative waste impacts. Therefore, the cumulative impact of the proposed project on all waste management resources would be SMALL.

4.13.10 Transportation

Section 4.10 describes the radiological impacts of incident-free transportation assuming all shipments of radioactive materials and waste to and from the Hermes reactor facility are by truck. Shipments include irradiated (spent) fuel, unirradiated fuel, and radioactive waste. Probable transportation routes were bounded by shipping unirradiated fuel more than 2,000 miles from Washington, shipping irradiated fuel more than 2,000 miles to Nevada, and shipping radioactive waste approximately 1,200 miles to Texas. An estimated 3 shipments of new fuel to the facility would occur each year with approximately ~~46~~ 35 shipments of LLRW each year to Texas or Utah. All spent fuel would be shipped after reactor shutdown. As shown in Section 4.10, impacts from incident-free transportation associated with the transport of fuel and waste for the proposed project would be SMALL.

This cumulative analysis considers radiological impacts from incident-free transportation associated with the transportation of fuel and waste for the proposed project along with impacts from past, present, and reasonably foreseeable actions that may contribute to cumulative impacts within the geographic area of interest. The geographic area of interest for radiological impacts of transportation is nationwide. Geographically, the Kairos Power site is near two main transportation corridors, the East-West I-40 and the North-South I-75, which historically channel most of the transport in the region. Although the potential cumulative impact along major traffic routes is SMALL, local roads in the immediate vicinity of the site would experience an increase in radioactive material shipments. Radiological cumulative impacts associated with transportation of radioactive materials and waste to and from the site includes impacts from radioactive material shipments to and from ORR facilities, the Energy*Solutions* Bear Creek facility, the proposed Coqui Pharma facility, proposed nuclear power reactors at the CRN site, and the proposed Kairos Power fuel fabrication facility. For example, the future Y-12 Uranium Processing Facility will receive shipments of uranium from other DOE facilities and the U.S. Navy and distribute uranium to other locations. Outside the 5-mile area around the site, the Watts Bar and Sequoyah nuclear power plants ship LLRW along I-75 and I-40. Like the shipments associated with the Kairos site, the impacts from each individual shipment would be minimal and, when combined with the impacts associated with the site, the total impact would also be minimal. While the region would have a significant number of radioactive material and radioactive waste shipments when compared to other regions of the country, the dose impact from each shipment is very small when compared to natural background radiation. Therefore, the cumulative radiological impacts of incident-free transportation of unirradiated fuel to, along with irradiated fuel and radioactive waste would be SMALL and the incremental contribution to cumulative impacts from the Proposed Action would also be SMALL.

4.13.11 Environmental Justice

The geographic area of analysis for evaluation of cumulative effects on environmental justice includes the 185 acres within the site boundary and the 5-mile region surrounding the site. No environmental justice communities have been identified within area analyzed; therefore, disproportionate impacts on low-income or minority populations from other actions are not expected. Disturbance to nearby residents related to temporary and minor traffic, air quality and noise impacts during construction, operations and decommissioning would affect the general population, and are not expected to disproportionately other populations.

affected by ongoing operations. Floral resources at the site are limited to vegetated areas which were formerly developed with industrial structures. Losses of fauna due to operations would be primarily attributable to bird collisions with stacks at the facility as wildlife occurrence on the site is low and relatively infrequent.

Water for the facility would be provided by the City of Oak Ridge and demineralized water would be trucked to the facility; therefore, water supply intake or cooling water intake structures would be not needed. Thus, there would be no operational impacts associated with impingement or entrainment of aquatic biota. Furthermore, the facility would not discharge process water directly into Poplar Creek or any other nearby water body, avoiding any impacts associated with pollutant or thermal discharges to aquatic resources. There would be no irreversible impacts to aquatic flora or fauna.

6.3.5 Socioeconomic Resources

No irreversible commitments will be made to socioeconomic resources because they would be reallocated for other purposes once the facility is decommissioned.

6.3.6 Historic and Cultural Resources

No known historic or cultural resources would be irreversibly altered due to the facility.

6.3.7 Air Quality

Construction and decommissioning activities would create dust and other emissions, such as vehicle exhaust. Implementation of controls and limits at the source of emissions on the construction site would result in reduction of impacts offsite. The dust control program would reduce dust due to construction activities and minimize dust reaching site boundaries. Specific mitigation measures are discussed in Subsection 4.2.1.1. Contractors, vendors, and subcontractors would be required to adhere to appropriate federal and state occupational health and safety regulations to protect workers from adverse conditions, including air emissions.

During operations, emissions would be a product of vehicle exhaust, ventilation system exhaust, and fuel combustion resulting in very low levels of gaseous pollutants and particulates released from the facility into the air. Emissions during operations would be in compliance with applicable Federal and State regulations, minimizing their impact on public health and the environment. No irreversible impacts to air quality are anticipated.

6.3.8 Irretrievable Commitments of Resources

Irretrievable commitments of resources during new plant construction would be similar to that of any small-scale industrial facility construction project. Unlike previous industrial construction, asbestos and other materials considered hazardous would not be used or would be used sparingly and in accordance with safety regulations and practices. Materials consumed during the construction phase are shown in Table 2.1-1. These materials would be irretrievable unless they are recycled at decommissioning. Additionally, approximately 31,800 gallons of diesel fuel (as a bounding assumption all fuel is assumed to be diesel) is expected to be used on an average monthly basis during construction (Section 2.1). Use of construction materials in the quantities associated with the facility would have a SMALL impact with respect to the commitment of such resources.

During operations, the main resources that would be irretrievably committed are the nuclear fuel~~,~~ and the Flibe liquid salt ~~primary~~ coolant~~, and the intermediate nitrite salt coolant~~. The spent nuclear fuel would not be recycled, and the coolant ~~salts~~ salt would be disposed as low-level radioactive waste. Materials used in the construction of the reactor, spent fuel canisters, and other waste containers and