Enclosure 5

LAR Supplement to Address Audit Discussion Points Summarized in NRC Letter Dated September 14, 2021 (ML21238A138)

(Redacted)

Summary of Discussions and Ameren Missouri Responses

As part of the NRC's review of Ameren Missouri's license amendment request (LAR) for adopting a risk-informed approach to resolve GSI-191 and respond to GL 04-02 for the Callaway plant, as submitted per Ameren Missouri letter ULNRC-06526, "Request for License Amendment and Regulatory Exemptions for a Risk-Informed Approach to Address GSI-191 and Respond to GL 2004-02 (LDCN 19-0014)," dated March 31, 2021 (ADAMS Accession No. ML21090A184), an audit was conducted by NRC audit team members in August 2021. To support the audit, an audit plan was transmitted via the NRC's letter to Ameren Missouri, "Callaway Plant, Unit No. 1 – Audit Plan and Setup of Online Reference Portal for License Amendment Request Regarding Risk-Informed Approach for Generic Safety Issue-191 (EPID L-2021-LLA-0059)," dated July 23, 2021 (ADAMS Accession No. ML21197A063) in advance of the audit. The plan contained a list of questions, requests and concerns (i.e., audit items) to be addressed and discussed during the audit. Following the audit (virtually conducted in accordance with the plan), an audit summary was transmitted via the NRC's letter, "Callaway Plant, Unit No. 1– Audit Summary for License Amendment Request and Regulatory Exemptions for a Risk-Informed Approach to Address Generic Safety Issue-191 and Respond to Generic Letter 2004-02 (EPID L-2021 LLA 0059 and EPID L-2021-LLE-0021)," dated September 14, 2021 (ADAMS Accession No. ML21238A138).

The audit summary described how the technical discussions conducted during the audit were focused on various areas or topics, including: General Information and Licensing Bases; Debris Generation/Zone of Influence; Transport, Head Loss and Vortexing; Net Positive Suction Head (NPSH); Coatings; In-Vessel Evaluation; Chemical Effects; Risk-Informed Basis; Defense in Depth and Safety Margin; and License Amendment Request, Exemption Request, and Performance Monitoring Program. Detailed summaries of the discussions of the various audit items identified in the audit plan (as organized under the noted areas/topics) were provided in an appendix to the audit summary. For most (but not all) of the items, the need for a follow-up response to each applicable item was identified or made evident, based on the NRC discussion addressing each audit item, as contained in the appendix. The overall expectation stated in the appendix was that the responses are to be provided in a supplement to the LAR. The responses have since been developed, and accordingly, responses for all applicable audit items are hereby provided in this enclosure (Enclosure 5 to ULNRC-06690), as follows.

The required responses below are organized (by topic) and numbered (based on audit item number) in accordance with the audit plan/summary. Page numbers referenced in the NRC staff questions/discussion for some of the audit items are based on the PDF page numbers from the March 31, 2021 LAR.

General Information and Licensing Basis

(1) Technical specification (TS) and technical bases issues identified:

a. In the TS bases markup under Surveillance Requirement 3.6.8.1, the word “program” is missing at the end of the last sentence. It should be Surveillance Frequency Control Program (see Enclosure 2 of the license amendment request (LAR) dated March 31, 2021 (ADAMS Accession No. ML21090A184, page 58 of 109).
b. The TS markups and final typed pages do not include an updated index entry for TS 3.6.8.
c. The TS final typed pages do not include footers on the final pages starting on page 60 of 109 of LAR Enclosure 2.

The licensee stated that similar issues were addressed in a previous supplement to the LAR, but these related items were identified that require resolution. The licensee stated that items described above in this issue will be addressed in a supplement to the LAR.

Ameren Missouri Response:

To address item 1 a., corrected markups to the current TS Bases revision are provided in Enclosure 2, Attachment 2-3 to this LAR supplement. To address items 1 b. and 1 c., corrected TS markups and TS final retyped pages are provided in Enclosure 2, Attachments 2-2 and 2-4, respectively, to this LAR supplement.

(2) Discuss the need for exemptions to General Design Criteria 35, 38, and 41 of Appendix A to Title 10 of the *Code of Federal Regulations* (10 CFR) Part 50.

A discussion between the NRC staff and the licensee clarified the licensee's intent for the requested exemptions.

Ameren Missouri Response:

Ameren Missouri concurs; no further response is needed.

(3) In the Final Safety Analysis Report (FSAR) markup in Section 6.3A.1.4, the last sentence should include that the Completion Time is also based on the low probability of an initiating event. This language for justification is from Technical Specifications Task Force (TSTF) Traveler TSTF-567. Also, in the same paragraph for Condition A, the number of sumps is irrelevant (see LAR Enclosure 2, page 100 of 109).

The licensee stated that it will revise the FSAR to include the basis for the Completion Time and consider how to address the comment regarding the irrelevance of the number of sumps.

Ameren Missouri Response:

The last sentence of first paragraph of proposed FSAR Section 6.3A.1.4, "Technical Specifications," as provided in Enclosure 2, Attachment 2-5 to this LAR supplement, has been revised to read, "The Completion Time is based on the low probability of an initiating event and the very low risk from the effects of debris, as demonstrated in the RoverD evaluation." The wording of third sentence within the same paragraph, which reads, "Condition A under the LCO is entered when one or more containment sumps is declared inoperable due to containment accident generated and transported debris exceeding the analyzed limits," has been retained, as it is consistent with the wording of TSTF-567, as implemented in the proposed TS 3.6.8 Condition A that is provided in Enclosure 2, Attachments 2-2 and 2-4 to this LAR supplement. However, for clarity, a new (fourth) sentence is added to the paragraph, which reads, "The two sumps are considered part of a single support system because containment accident generated and transported debris issues that could render one sump inoperable could render all of the sumps inoperable." The new sentence is consistent with the proposed Bases for TS 3.6.8 Actions A.1, A.2, and A.3 that are provided in Enclosure 2, Attachment 2-3 to this LAR supplement.

(4) In the FSAR markup of key methods – Programs or method other than

CASA Grande for calculation of debris generation, transport, or sub-model calculations may be used as long as they are performed per the approved guidance or other U.S. Nuclear Regulatory Commission (NRC) approval in its safety evaluation. However, integrated calculations for changes in risk may need to be performed using this program. The NRC staff has invested significant resources to validate the CASA Grande methodology. Other methods have not been reviewed by the NRC staff. The FSAR markup is not clear on this point. The FSAR should identify CASA Grande as the method used to perform the overall risk evaluation. Alternately, other methods should be identified along with any necessary limitations (see LAR Enclosure 2, page 102 of 109). This is related to a question in the LAR, Exemption Request, and Performance Monitoring Section.

The licensee stated that it would add CASA Grande to the list of key methods in the FSAR. The identification of CASA Grande as a key method applies to integrated calculations. Less complex calculations may be accomplished using other methods.

Ameren Missouri Response:

The list of key methods of evaluation in proposed FSAR Section 6.3A.2.1, "Change Control for Methods of Evaluation," as provided in Enclosure 2, Attachment 2-5 to this LAR supplement, has been revised to include a new entry at the top of the list that reads, "1. The methodology for performing integrated calculations for overall risk evaluation or to identify changes in overall risk (CASA Grande)." The other entries in the list have been renumbered to accommodate the additional key method of evaluation.

(5) It was not apparent that the key methods in the FSAR markup include the following important methods (refer to LAR Enclosure. 2, page 102 of 109):

a. transport methodology
b. methods to estimate generation of debris types other than fiber (e.g., chemical precipitates, coatings, or other potential debris sources).
c. limits on other debris types
d. methods for performing in-vessel downstream effects evaluations
e. methods for performing ex-vessel downstream effects evaluations

The licensee stated that it will update the list of key methods in the FSAR to include the items identified above. Some of the items may be included in guidance that is already referenced and may not need to be part of the updated list.

Ameren Missouri Response:

The "assumptions and methods in the WCAP-17788 in-vessel effects analyses" are included as item 4 in the renumbered list of key methods of evaluation in proposed FSAR Section 6.3A.2.1, as provided in Enclosure 2, Attachment 2-5 to this LAR supplement. In addition, the following key methods of evaluation have been appended to the list:

6. The assumptions and methods for performing ex-vessel downstream effects evaluations.

7. The assumptions and methodology for debris transport in containment, as described in Section 6.3A.1.2.2.

8. The methods to estimate generation of debris types other than fiber (e.g., chemical precipitates, coatings, or other potential debris sources).

9. Limits on other debris types, as specified in Table 6.3A-2.

(6) In Table 6.3A-2 on page 108 of 109 of LAR Enclosure 2, should the note for the low-density fiber glass (LDFG) fines that states that the 300 pound mass (lbm) includes 30 lbm of latent fiber, also state that it includes 50 lbm of fine fiber margin? In the same table, the particulate debris amounts are provided as volumes, but the total is provided as a mass. Can the consistency within the table be increased by using a volume for the total and for the available margin, especially considering that Note 3 states that it is the volume of debris on the strainer that is related to headloss?

The licensee stated that it will consider updating the table to provide clarity for plant staff.

Ameren Missouri Response:

Proposed FSAR Table 6.3A-2 in LAR Enclosure 2 specifically documents material quantities that were used in Callaway 2016 strainer testing. The 300-pound mass (lbm) fiber test load includes 30 lbm of latent fiber and up to 270 lbm of other fibrous debris. Citation of the 30-lbm latent fiber quantity affirms that this debris type was examined and was bounded by the fiber test quantity. Successful testing of the quantities listed in Table 6.3A-2 establishes the maximum validated capacity of a single strainer for accommodating LOCA-generated debris, regardless of where or how the debris constituents are generated in containment.

Some analyzed LOCA scenarios generate and transport more than 300 lbm of fiber, and the cumulative frequency of scenarios exceeding the test limit defines the RoverD risk estimate. Fifty pounds mass (50 lbm) of fine fiber was added to the debris load calculated for every LOCA analyzed, regardless of LOCA size, which causes more scenarios to exceed the fiber test load and increases the estimated risk. In this way, the extra 50 lbm of fine fiber provides an analytic margin in the Baseline risk calculation that is not related to specific test loads, so Table 6.3A-2 was not revised to reference the 50-lbm fiber margin.

Table 6.3A-2 was revised to delete the test volumes of each coating type (e.g., acrylic, epoxy, IOZ), while noting the specific types that were represented in the total tested particulate. All debris quantities are provided in units of pounds mass for consistency, but the explanatory note regarding debris volume remains to remind a reader that additional information regarding debris densities is required if plant configuration changes are made.

An additional entry for Miscellaneous Debris is now included in Table 6.3A-2 for completeness, along with several other minor clarifications.

Debris Generation/Zone of Influence (Excluding Coatings)

(7) Discuss the methodology for the hemispherical break zones of influence (ZOIs) mapping. Are the ZOIs centered at the edge or center of the pipe where the break is assumed to occur? Refer to page 96 of 109 in LAR Enclosure 2 for the FSAR description.

The licensee clarified that ZOIs are centered at the center of the pipe for partial breaks.

Ameren Missouri Response:

Ameren Missouri concurs; no further response is needed.

(8) The NRC staff notes that besides the potential for pipe weld failures, there are other potential failures from non-pipe components in the reactor coolant system (RCS) pressure boundary such as steam generator manways, pressurizer nozzles (e.g., heater sleeves, safety and relief valves), pump bodies, and mechanical joints. Clarify whether the non- pipe components mentioned above were selected as a break location and evaluated for debris generation. If not, provide justification.

The licensee stated that the failure locations identified by this item are considered to be secondary risk contributors. The NRC stated, that for completeness, these potential break locations should be identified and evaluated to ensure that they do not contribute significantly to risk. The licensee stated that it will review the submittal to make sure that break locations of this type are identified and quantitatively or qualitatively screened to show that the risk contribution is insignificant to the overall risk quantification.

Ameren Missouri Response:

The response to audit question 34 provided in this supplement provides a survey of component failures that are identified in the PRA as having a potential to lead to sump recirculation, including bolted manways on the steam generator and pressurizer, pressurizer safety and relief valves, and bolted flange connections (mechanical joints). Reactor coolant pump (RCP) seal failures are also addressed in the response to question 34. All event scenarios listed in this question #8 (and many other scenarios listed in the question 34 response, such as control rod drive ejection) are screened from further consideration in the risk analysis because they have limited potential for debris generation (comparable to a 2-in. LOCA) and/or have much lower recirculation flow rate requirements than the large break LOCA (LBLOCA) conditions tested to establish a 300-lbm transported fiber limit. The response to audit question 35 explains the importance of reduced flow rate during recirculation.

Pressurizer heater nozzles (sleeves) are not included in the list of Class 1 welds that are quantified as primary risk contributors because each weld is small and they are located under the steel pressurizer support skirt that is credited as a robust barrier to limit ZOI size. (See Figure Q8.1.) RCP body failures were not considered explicitly because seal failures are considered a more likely location for pressure boundary breach related to pumps. RCP Seal LOCAs are assumed to have debris generation potential smaller or comparable to a 2-in pipe break and do not contribute to risk of ECCS failure.

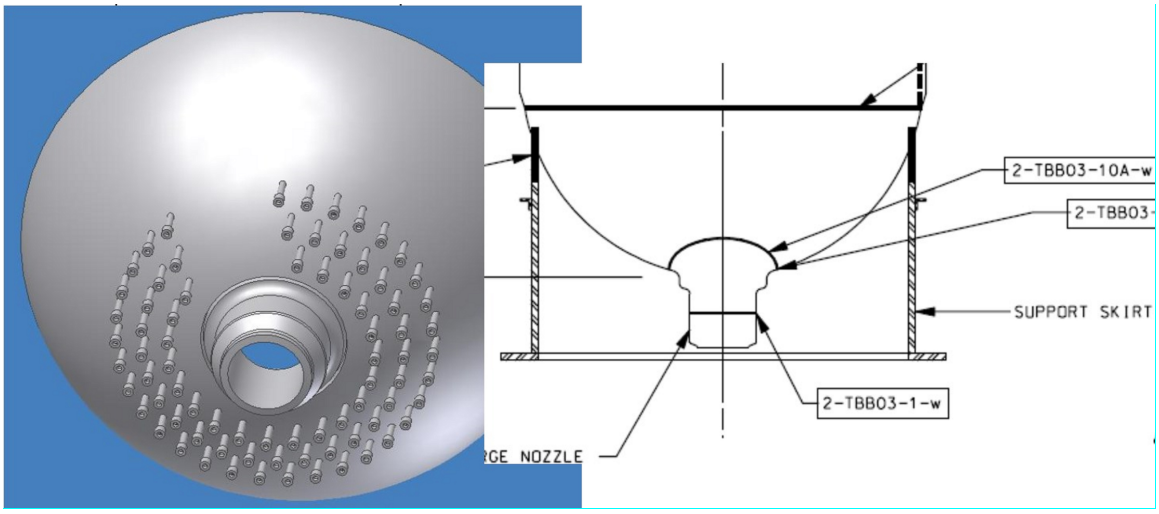

Figure Q8.1. Generic schematic of heater nozzle (sleeve) installation at the bottom of the pressurizer.

Potential failures from non-pipe components in the reactor coolant system (RCS) pressure boundary were not selected for specific debris generation analysis because they are screened from having any significant contribution to the overall risk quantification. It is important to note that the prevalence of large Class 1 welds near all non-pipe components ensures that all combinations of debris have been examined in the analysis. There are no special or problematic insulation applications specific to non-pipe component break locations that have not been included as targets in pipe-weld break simulations.

(9) Discuss whether the break selection process considered non-weld locations where there is an elevated potential for failure, for example highly stressed locations, branch connections, and elbows. Refer to page 9 of LAR Enclosure 3.

The licensee stated that it will evaluate these potential break locations to determine whether previously evaluated locations bound their potential for debris generation. The licensee further stated that the results of the evaluation will be provided in a supplement to the LAR.

Ameren Missouri Response:

NUREG-1829 [56] states that, “Welds are almost universally recognized as likely failure locations because they can have relatively high residual stress, are preferentially attacked by many degradation mechanisms, and are most likely to have preexisting fabrication defects.” The report also states that thermal fatigue, stress corrosion cracking, and mechanical fatigue were deemed to be important in PWR plants, but that flow accelerated corrosion was not as great a concern in PWR as in BWR. Preliminary studies performed by the panel on through-wall cracking frequencies and piping LOCA frequencies specifically examined high-stress areas and cyclic phenomena. From the depth of this knowledge base and the fact that no specific exclusions of non-weld break locations are mentioned in the study, it is concluded that either NUREG-1829 [56] LOCA frequencies include implicit consideration of highly stressed locations, branch connections, and elbows or the break frequency contributions from these locations were judged to be small compared to other locations and failure mechanisms.

In addition to proper assignment of total break frequency, the location of candidate breaks relative to potential debris generation targets is also important. 411 non-isolable welds on pipes greater than one inch in diameter are included in the Callaway risk analysis, and many of these welds are associated with branch connections and elbows. Because of close proximity between the bend of an elbow and its attachment welds, breaks at the welds are deemed to be suitable representative locations for postulating LOCA and their subsequent ZOI that generate debris. As a practical matter, adding additional break locations between the welds reduces the per location break frequency. If the midpoint of an elbow and its attachment welds are all found to be "critical" locations capable of exceeding fiber test limits, their individual (smaller) frequencies would simply be added back together to compute their total risk contribution.

Callaway complies with all industry standards governing inspection and maintenance practices, as presumed by the NUREG-1829 [56] elicitation panel. There are no identified reasons why high-stress locations, branch connections, and elbows pose a plant-specific concern that would increase break frequency or the risk of core damage.

(10) In LAR Enclosure 3, on pages 12 and 17, the licensee states that FOAMGLAS® is treated as fiber and that this results in an overprediction of risk due to the additional LDFG being transported to the strainer. Considering the relatively low particulate debris margins for some cases, how was this evaluated? The NRC staff would be able to perform confirmatory calculations for this issue if a database of debris generation and transport for each break scenario, including FOAMGLAS®, is made available to the staff. This is related to a question in the Risk-Informed Bases section and the request for the spreadsheet of debris generation and transport.

The licensee stated that the material was initially modeled as Nukon but was later identified to be FOAMGLAS®. The licensee explained that a supplement will provide additional details on how the debris source is treated in the risk analysis. The information will include results of testing conducted to assess the transport properties of the material, assumptions regarding its contribution to chemical effects, the acceptability of the amount of fiber assumed to be generated (based on the material density vs. Nukon density), and will address the consequences that could occur if the material was transported to the strainer and behaved as particulate. This item is related to Item 33 of this Appendix. The issue is also related to Item 20 of this Appendix as the resolution for Item 20 may result in additional margin in the particulate debris source term.

Ameren Missouri Response:

Pipes discovered to be insulated with FOAMGLAS® were modeled as NUKON® fiberglass in all debris generation and transport calculations. This means that these pipes were affected by the 17D ZOI applied for NUKON® and that the corresponding debris quantities and sizes were included in all RoverD comparisons to the 300-lbm fiber test limit. The additional fiberglass applied to these pipes represents a 350-lbm safety margin of excess fiber assumed to be present in containment. Not all of this material can be damaged by every break, but the fiber debris generated by some breaks may have exceeded the 300-lbm fiber test limit and contributed to ΔCDF because it impacted pipes actually insulated with FOAMGLAS®. Equivalent quantities of the two insulation types are based on insulation thickness applied to specific lines in the CAD model. FOAMGLAS® is assumed to have a midrange

density of 8 lbm/ft^3 and NUKON® is assumed to have a density of 2.4 lbm/ft^3. Figure Q10.1 illustrates the location of FOAMGLAS®-insulated pipes in containment.

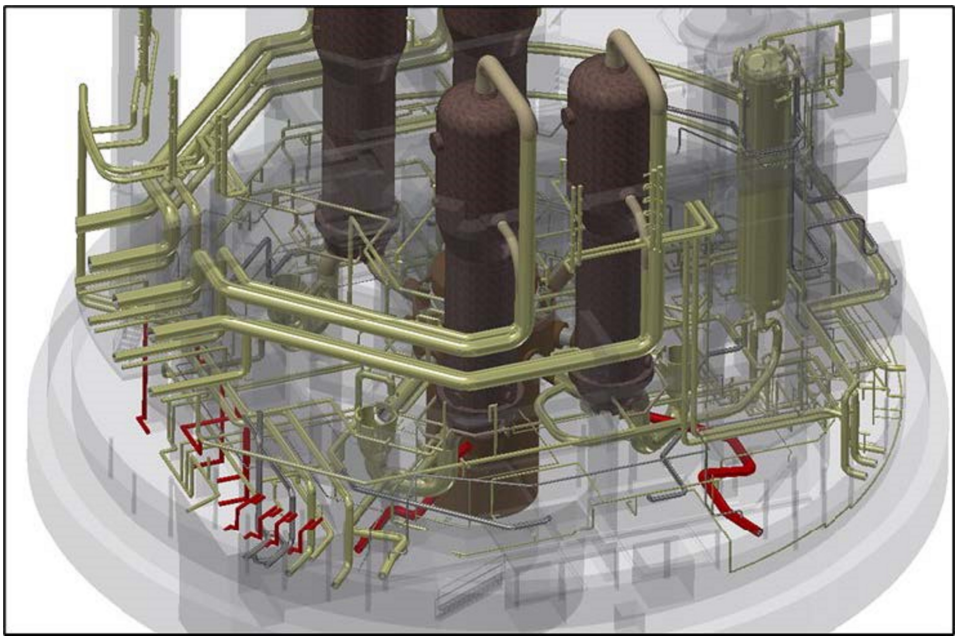

Figure Q10.1. FOAMGLAS® insulated lines in Callaway containment (red).

Evaluation of FOAMGLAS® as LDFG instead of particulate is judged to be conservative based on the following argument. The total amount of FOAMGLAS® in containment is 1167 lbm. Twenty-five breaks that do not contribute to ΔCDF have less particulate margin than 1167 lbm. The minimum particulate margin for the 25 breaks that do not contribute to ΔCDF is 1081 lbm. If less than 8% (i.e., (1167 – 1081) / 1167 x 100%) of the total FOAMGLAS® mass does not reach the strainers in a form that causes head loss, treatment of FOAMGLAS® as transportable particulate would not induce an additional contribution to ΔCDF. FOAMGLAS® physical characteristics and the geometry of ZOI debris generation make it very unlikely that more than 92% of the total FOAMGLAS® mass can be degraded into problematic particulates.

Physical characterization of FOAMGLAS® shows that the glass material is not degraded to fine particulates by wetting or immersion [42]. The manufactured material and relatively small pieces (1/2-in and larger) remain floating in hot water for more than 24 hours with no signs of degradation. Floating is caused by air trapped in the open-cell expanded glass lattice. Mechanical crushing, or ablation of bulk stationary insulation, would be required to generate a significant particulate quantity. Particulates released from the damaged glass structure have minimum dimensions typical of the characteristic expanded glass wall thickness and are not anticipated to cause the same degree of head loss observed for the silicate surrogates used in strainer testing to approximate failed coatings.

Two-phase jet test data are not available to determine a ZOI specific to FOAMGLAS®, but it is expected that shadowing by concrete would protect some FOAMGLAS® from some postulated breaks. In the plant, FOAMGLAS® is covered by non-banded stainless-steel jacketing similar to that commonly applied to NUKON® insulation. The 17D ZOI applied for fiberglass includes internal zones for debris size fractions, including intact blankets. Being a rigid lightweight material, it is expected that FOAMGLAS® not held firmly in the

path of a jet would suffer similar damage ranging from small granules to dislodged sections of intact product.

Potential changes in chemical product loads caused by FOAMGLAS® were examined by replacing fiberglass used in the WCAP-16530 calculations by 100% of the identified FOAMGLAS® and treating it as E-Glass specified in the calculator [43]. Total chemical product mass increased by factors ranging from 2% to 22% over the four conditions examined. The highest increase was observed for a case where fiber debris was limited to the 300-lbm RoverD test limit. However, chemical product test loads exceeded the RoverD fiber contribution by a significant margin. Any actual increases in chemical product load caused by FOAMGLAS® are likely to be less than the test load because 100% FOAMGLAS® damage is unlikely and because test loads attempted to bound chemical contributions from the maximum DEGB fiber debris. It is important to note that the final batch of chemical products added to strainer testing caused negligible head loss increase.

(11) In LAR Enclosure 3, on pages 15 and 21, the submittal states that the assumption for miscellaneous debris is 200 square feet. It is not clear whether the containment was inspected for signs, tags, labels, or other similar items that could transport to the strainers to validate this value. The submittal discusses that these items are generally not used but does not state that any inspection was done to ensure that the actual amount of miscellaneous debris is bounded by the assumption. Discuss any actions taken to verify the assumption.

The licensee discussed actions that have been taken to reduce and control the amount of miscellaneous debris in containment. The licensee stated that these actions will be described in a supplement to the LAR.

Ameren Missouri Response:

The presence of miscellaneous unqualified tags and labels used for identification of equipment in containment, which are assumed to result in transportable debris to the containment sumps, has been identified and evaluated under the Callaway corrective action program. To resolve the issue, it was determined that any unqualified sign, tag, or label with a surface area of less than 60 square inches that was present in containment at the time of discovery was allowed to remain in containment. Each unqualified sign, tag or label that had a surface area greater than 60 square inches was removed from containment prior to the end of Refuel 10. As described in the response to question 41 in this enclosure, plant procedures require that new or replacement equipment identification tags and labels installed in containment be qualified for use in containment, and walkdowns are performed prior to entering Mode 4 from Mode 5 each refuel outage to verify that unqualified temporary signs are removed. These provisions preclude any increase in the total surface area of unqualified tags and labels in containment.

The total surface area of signs / placards, tags, labels and other permanently-installed miscellaneous debris items in containment was established by review of the Callaway equipment list and specification drawings for the structures, systems, and components installed in containment, and has been confirmed by walkdown. The response to item 3.b.5 that is provided in Enclosure 3, Attachment 3-2 to this supplement has been revised to describe miscellaneous debris that remains permanently installed in containment. A listing of the types and quantity of the miscellaneous debris, identified in Enclosure 3,

Attachment 3-2 to this supplement as Table 3.b-3, shows that the total miscellaneous debris quantity is 330.2 ft^2. This figure includes 246.1 ft^2 of metal identification tags within break location ZOIs, which are qualified for use in containment per plant procedures and have been demonstrated by testing and plant geometry to be non-transportable to the strainer in recirculation flow. A limited quantity of metal tags (used to mark Electric Power Research Institute (EPRI) radiological survey locations) which are not included in the total, have likewise been demonstrated to be non-transportable. The remaining 84.1 ft^2 of transportable miscellaneous debris is bounded by the NEI 04-07 assumption of 200 ft^2, which was used to establish parameters for strainer testing. Specifically, since 25% overlap is assumed for miscellaneous debris, the available surface area of the strainers as tested was reduced by 150 ft^2.

While the assumed quantity of transportable miscellaneous debris was 200 ft^2, significantly more debris could be accommodated under tested flow conditions before the plant strainer would experience excessive face velocities.

The following argument defines the maximum surface area of miscellaneous debris that can be accommodated on a single strainer, as supported by 2016 strainer test flow rates. One principal test specification preserves strainer face velocity ($V = Q/A$) between the plant condition and the scaled strainer test article:

$$\frac{Q_{test}}{A_{test}} = \frac{Q_{plant}}{A_{plant}} \qquad \text{Eq.(Q11.1)}$$

where

Q_{test}	is the test strainer volumetric flow rate (gpm),
Q_{plant}	is the plant single-strainer maximum flow rate (gpm)
A_{test}	is the test strainer flow area (ft^2), and
A_{plant}	is the plant strainer open flow area (ft^2).

The plant strainer open flow area is determined by subtracting 75% of the transported miscellaneous debris area (A_{debris}) from the plant clean strainer area (A_{strain}) to credit allowed 25% overlap of debris items. Substituting $A_{plant} = A_{strain} - (0.75)A_{debris}$ in Eq.(Q11.1) and solving for A_{debris} gives the formula

$$\frac{Q_{test}}{A_{test}} = \frac{Q_{plant}}{A_{strain} - (0.75)A_{debris}}$$

$$A_{strain} - (0.75)A_{debris} = \frac{Q_{plant}}{Q_{test}} A_{test}$$

$$A_{debris} = \frac{1}{0.75}\left(A_{strain} - \frac{Q_{plant}}{Q_{test}} A_{test}\right) \qquad \text{Eq.(Q11.2)}$$

The strainer test report [44] gives all necessary test specifications to evaluate Eq.(Q11.2), yielding an upper bound on miscellaneous debris area of

$$A_{debris} = \frac{1}{0.75}\left(3311.5\ ft^2 - \frac{8750\ gpm}{1102\ gpm} 348.3\ ft^2\right) = 728\ ft^2.$$

The calculated bounding miscellaneous debris loading of 728 ft^2 applies to single-train ECCS response. If a dual-train ECCS response occurs as designed, each strainer can accommodate the same amount of area lost to miscellaneous debris for a total of up to 1456 ft^2.

(12) Page 18 of LAR Enclosure 3 discusses reflective metal insulation (RMI) debris. The NRC staff agrees that RMI in a typical debris bed will

generally result in lower headloss. Discuss the potential that RMI could fill the voids in the sump between the strainer stacks and be covered with a debris bed that has an area similar to the sump opening in the floor.

The licensee discussed the reasons that RMI is not expected to transport to the strainers. The licensee stated that a supplement will include a description and basis for the assumption that significant RMI debris will not transport into the sump pits.

Ameren Missouri Response:

Two arguments support the conclusion that the Callaway sump pits cannot be filled with RMI debris and subsequently covered by fiber:

1. Pool Transport:

- The bulk of RMI insulation is applied on steam generators and on the reactor vessel head above grated mezzanines that would collect damaged RMI foils and limit arrival in the sump. RMI installed below gratings is limited to the RCS piping connections to steam generators, some segments on the hot leg (HL) and cold leg (CL) RCS piping (mostly in primary shield wall penetrations), and on the reactor vessel where it is protected from most breaks except RPV nozzle breaks and debris would have a tortuous transport path to out of the reactor cavity. Washdown fractions commonly applied for fiberglass debris account for degradation under containment spray that would not apply to RMI debris, so RMI washdown fractions are small.
- RMI debris is less transportable in the pool than small fiber. Small fiber was calculated to have recirculation transport fractions between 70 and 90 percent, depending on location in the annulus or in the steam generator compartments. (100% of small fiber in the pool was assumed to transport). If 60% of the generated RMI-foil debris transported to the strainer, the equivalent manufactured insulation volume might be comparable to the void space in the strainer pit, but the RMI debris density might be as little as 30% of the manufactured density, further reducing effective load in the sump pits. Callaway sump pits have a 6-inch curb around all sides that prevent direct ingress of debris sliding on the floor. The required lift velocity of 1 ft/s [45] is not observed near the Callaway strainer cavities, so RMI foils moving on the floor are most likely to loosely aggregate in shallow piles along the sump-pit curb and throughout containment anywhere velocity zones fall below the transport threshold.
- Crumpled RMI foils that do transport to the strainer would arrive concurrently with fiber debris and coatings particulate. A scenario of sequential debris arrival where very large quantities of RMI arrive in advance of significant quantities of fiber is not possible. Comingled RMI and fiber inside the sump cavity is likely to beneficially increase effective bed porosity as described below, and for this reason, RMI debris was specifically excluded from deterministic strainer testing.
- Formation of a fiber bed on top of RMI foils would be very unlikely unless

intact blankets or large flocks of fiber debris arrive to cover larger areas of the top surface that span many shards of foil. The bounding transport factor for large fiber is 66%, and intact blankets do not transport at all, leaving only small and fine fiber debris available to form the postulated debris mat. It is worth noting that even large fiber flocks retain significant porosity from the original manufactured condition and were converted to small/fine fiber for testing because the presence of large fiber debris limits maximum headloss.

2. Disrupted Bed Formation:

- Perforated stainless steel plate used to construct the strainer assemblies behaves as a smooth flat surface, from the perspective of arriving debris. In practical test configurations, it is difficult to establish and maintain a contiguous (unbroken) fiber bed with minimum porosity that is able to maximize head loss. Any disruptions in the surface coverage caused by pump vibration, dropped tools, or careless debris introduction can expose small sections of the strainer plate and allow significantly more flow and reduced head loss. In many circumstances, RMI foils have been observed to disrupt fiber debris beds and limit measured head loss [46]
- In the proposed scenario where RMI foils fill the sump cavity to a level that can physically support a layer of fiber that sustains large head loss, any RMI foils that touch the strainer surface will act to disrupt the formation of a contiguous, high-porosity debris layer, allowing enhanced flow compared to the absence of the physically rigid foil. Also, the top of an RMI-only debris bed is not capable of forming a thin-bed condition similar to flat perforated plate because the geometry is convoluted on a scale much larger than the size of individual fibers and small flocks.
- When full-load strainer testing is performed, care is taken to maximize compact debris bed formation, and the final result is a strainer assembly with gaps between plates fully loaded and all available flow surfaces covered with debris. Even after limiting debris loads are applied to the strainer, significant empty volume exists in the strainer cavity. In a realistic scenario with commingled fiber and RMI, the entire available strainer cavity would be available as a volumetric filter medium capable of accommodating more than the tested fiber limit.
- In some respects, a large volume of crumpled RMI foil would act as an effective volumetric prefilter for fiber. The manufactured density of fiberglass insulation is not sufficiently compact to limit significant strainer flow, and careful steps are taken during testing to avoid introduction of “small” and “large” fiber flocks and pieces that retain original characteristics of the insulation that allow enhanced flow. By comparison, a large volume of crumpled RMI foil would have an effective density many times lower than manufactured fiber. A large volume of RMI foils would act as an effective volumetric prefilter that captures individual fibers on sharp edges and disperses the debris through a much larger volume than the familiar compact arrangements that are carefully established during maximum load testing. While allowing individual fibers to migrate inward through relatively large openings, the RMI would also tend to capture any larger pieces at the surface of the pit, establishing a disorganized pile that cannot induce maximum head loss.

Transport

(13) Discuss the calculation of the erosion fractions for small and large fiber pieces. The NRC staff understands that the effect is small, and margin is included in the analysis, but would like to understand the methodology. Refer to page 139 of LAR Enclosure 3.

The NRC staff reviewed the transport calculation that was made available for review on the audit portal.

Ameren Missouri Response:

Ameren Missouri concurs; no further response is needed.

(14) The response to 3.h.2 on page 54 of LAR Enclosure 3 states that the transport phase applied to qualified coatings is the recirculation phase. Explain this assumption.

The licensee stated that it would review the statement and correct the description as necessary to accurately reflect the assumptions used in the qualified coatings transport calculation.

Ameren Missouri Response:

The response to 3.h.2, as provided in Enclosure 3, Attachment 3-2 to this supplement, has been revised to provide clarification that for damaged coatings, holdup is not credited during blowdown, washdown, or recirculation. The transport fraction for these stages is 100%. During pool fill, a portion of qualified coatings debris is expected to be pushed by sheet flow to inactive cavities and the emergency sump strainers. One percent of destroyed qualified coatings is estimated to transport to inactive cavities. The overall transport fraction accounts for all transport stages, but it is finally equivalent to the pool-fill transport fraction, 1 x 1 x 1 x 0.99 = 0.99.

Head Loss and Vortexing (Attachment 3-2, Item 3f)

(15) Describe how the lower submergence for the small break loss-of-coolant accident (LOCA) (and potentially medium break LOCA) is considered in the flashing and degasification evaluations? Does the submergence increase significantly after sump switchover? Is reduced debris headloss considered for the smaller break cases? Refer to page 29 of LAR Enclosure 3.

This entry covers Items 15, 18, and 19 since they cover issues related to testing and evaluation of the small break LOCA and large break LOCA conditions. The licensee stated that it will clarify the small break and large break LOCA cases for headloss testing and net positive suction head (NPSH) margin. The licensee further stated that a supplement will clarify the treatment of the small break and large break LOCA cases for NPSH, flashing, and deaeration. The licensee stated that there are three cases considered. Small break LOCA, large break LOCA with residual heat removal (RHR) only, and large break LOCA with RHR and containment spray.

The licensee explained that the information in the supplement will include a summary of the relevant assumptions and parameters from the headloss calculation for strainer headloss, sump level (strainer submergence), credited containment pressure, and flowrates for each case. The licensee stated that it may include information on margins that are provided by the assumptions used in the headloss and NPSH calculations. For example, bubble collapse and re-absorption of gasses were not credited, maximum voiding is assumed in all NPSH cases, some test cases included significant flow margin compared to plant flow rates, and the debris headloss was not scaled to higher temperatures for any of the cases.

Ameren Missouri Response:

The small break LOCA (SBLOCA) core analysis does not credit recirculation to achieve successful core cooling. However, recirculation, flashing and degasification evaluations were performed for SBLOCAs to verify strainer performance under all conditions. Because sprays are not actuated for a SBLOCA, the ECCS recirculation mode would only be entered late in the accident sequence after the RWST reaches the low-low level with auto swapover of the RHR pumps to recirculation while the Operators swapover the SI pumps and CCPs when the normal sump level indicator reaches the minimum pool level. The SBLOCA minimum pool height is 1.3 ft [47], corresponding to a submergence of approximately 2 in. [48] at emergency core cooling system (ECCS) switchover. The pool height of 1.3 ft and submergence of 2 in. assume a maximum error of minus 3 in. for the normal sump level indicator [49] that initiates ECCS switchover for SBLOCA. In other words, if the normal sump level indicator performs nominally, the recirculation pool will be 3 in. deeper, resulting in actual SBLOCA submergence of 5 in.

Minimum submergence for SBLOCA is ensured by a recent emergency operating procedure (EOP) change to have the Operators verify normal sump minimum pool level prior to swapping over the SI pumps and CCPs to recirculation. The change was made to maintain successful recirculation as a defense-in-depth contingency for SBLOCA, which has the highest LOCA frequency.

Since containment spray (CS) pumps are not initiated for a SBLOCA, if recirculation were required for SBLOCA, containment pool height would not be expected to change significantly after ECCS switchover because fluid is not delivered from the RWST into the containment pool by the CS pumps and no spray flow would be drawn from the pool after switchover. Head losses applied for SBLOCA flashing and degasification analyses considered a condition of minimal debris by assuming the thin bed head-loss test represents all SBLOCA debris loads, even though most small breaks cannot generate enough debris to form a contiguous fiber layer. Thin-bed tests combined LBLOCA flow rates with the minimum fiber needed to induce particulate filtration. Actual SBLOCA strainer flow rates would be lower, reducing debris-bed compaction and flow velocity experienced during the test and leading to lower head loss. Medium break LOCAs (MBLOCAs) have approximately the same submergence as LBLOCAs, because required water inventories are the same. In addition, because MBLOCAs generate less debris, strainer performance analyses for LBLOCAs, in combination with thin-bed test results, are considered bounding for MBLOCAs.

Table Q15.1 itemizes strainer test results for three plant operating conditions and provides corresponding temperature and flow test conditions and the degree of conservatism inherent to the tested flow rates. These results and conditions are documented in the referenced calculation [48]. Note that test flow rates exceeding plant operating conditions

cause additional bed compaction and higher head loss that cannot be removed from the measurement by temperature or velocity scaling. However, for the SBLOCA case in Table Q15.1, measured head loss was reduced to scale the direct effect of velocity down to the expected maximum operating conditions for flashing analysis. For SBLOCA degasification analysis, the head loss displayed in Table Q15.1 is conservatively applied with no scaling.

Results in Table Q15.1 were applied to evaluate the strainer performance metrics of flashing, air ingestion (vortexing), air evolution, and mechanical buckling. Adequate NPSH margin was also calculated and confirmed for the two LBLOCA conditions. NPSH was not directly calculated for SBLOCA conditions because recirculation is not required for SBLOCA and because thin-bed and full debris load tests bound the head-loss expected for SBLOCA.

Table Q15.1 Strainer Test Results for Three Operating Conditions.

Scenario	Debris Bed Pressure Loss (psi)	Debris Bed Head Loss (ft)	Test Temperature (°F)	Test Flow Rate (gpm)	Test Flow Rate Conservatism (%)
LBLOCA ECCS Operation (4,800 gpm)	0.4	0.9	119	532	0
LBLOCA ECCS and CS Operation (8,750 gpm)	1.5	3.5	120	1,102	15
SBLOCA Operation (1,500 gpm)	0.2 (thin-bed test)	0.5	119	505	300

The Callaway maximum containment pool temperature is approximately 265°F. The pool temperature after 12 days is approximately 145°F. Based on these extrema, bounding temperatures of 270°F and 140°F were assumed for all analyses. Table Q15.2 itemizes strainer submergence and equivalent pressure at the maximum temperature of 270°F.

Table Q15.2. Strainer Submergence and Equivalent Pressure at Four Operating Flow Conditions.

Scenario	**Distance and Pressure at 270°F from Top of Pool to Top of Strainer**
SBLOCA	0.1 ft (0.04 psi)
LBLOCA RHR Switchover	0.6 ft (0.2 psi)
LBLOCA CS Switchover	1.1 ft (0.4 psi)
LBLOCA Long-Term Recirculation	1.1 ft (0.4 psi)

Key assumptions inherent to the sump performance evaluation summarized in Table Q15.2 include the following:

1. Limiting conditions of temperature, submergence, and flow rate are assumed <u>for each pump case</u> regardless of any event timing inconsistencies between the assumed conditions and the actual accident sequence.
2. No credit for LBLOCA reduced spray flow rate was applied, even though reduced or terminated spray flow is permitted by emergency operating procedures.

3. A common high temperature is used for air evolution assessment for all cases
4. Containment pressure is assumed to be equal to vapor pressure at temperatures ≥ 212°F and equal to atmospheric pressure below 212°F except when over-pressure is credited as described below.
5. Head losses measured at the test temperature of 120°F were not scaled to higher expected pool temperatures that would reduce predicted head loss.

A minimum necessary overpressure credit is applied to suppress flashing at the top of the strainer assembly. For LBLOCA, 1.7 psi of credit is needed for temperatures above 212°F (approximately 10% of available containment pressure). For SBLOCA, 0.07 psi of credit is needed for temperatures above 212°F (less than 1% of available containment pressure). If nominal performance of the normal sump level indicator is assumed (no assumed penalty for a spurious low-level reading), overpressure credit is not required.

(16) The title for Figure 3.f-4 is incorrect. It states that it is a containment spray system (CSS) process flow diagram, but actually depicts the coatings surrogate size distribution.

The licensee stated that it would correct the title of the figure in a supplement.

Ameren Missouri Response:

The title of Figure 3.f-4, as provided in Enclosure 3, Attachment 3-2 to this LAR supplement, has been corrected to read "Coatings Debris Surrogate Particulate Size Distribution."

(17) Explain and justify the method used to determine and justify the amount of pressure credited to suppress flashing across the strainer (LAR Enclosure 3, Attachment 3-2, page 42.). The NRC staff had difficulty understanding the method described in the response to 3.f.14. Provide the containment pressure(s) and sump temperature(s) used for this analysis. What are the potential ranges for these parameters that could occur for a similar scenario depending on the assumptions used? For example, what are the assumptions for containment air cooler and CSS operation? How does service water temperature affect the response? Is any containment pressure credit needed to suppress flashing at temperatures lower than 212 degrees Fahrenheit (°F) (e.g. 211 °F)? Why was 212 °F chosen as the lowest temperature? NRC staff guidance is to use assumptions that minimize containment pressure and maximize sump temperature. However, a demonstration of large margin using a design basis calculation is also acceptable. The NRC staff agrees that sump pool temperature and containment pressure are related, but one parameter can lag the other.

The NRC staff reviewed the headloss calculation and assumptions used to determine the amount of margin available above the pressure credited to suppress flashing and reduce deaeration for both the small break and large break LOCA cases. The licensee stated that they are crediting only the amount of pressure needed to prevent flashing,

and that amount is small compared to the available pressure. The licensee stated that they will provide a summary of the relevant information from the calculation on the docket that will enable the NRC staff to reach a regulatory conclusion on this issue.

Ameren Missouri Response:

The response to audit question 15 provided in this enclosure documents assumptions and conditions applied to credit the minimum containment overpressure necessary to suppress boiling at the top of the strainers for SBLOCA and LBLOCA conditions. Of principal note is the fact that the need for a small overpressure credit is driven by the assumed 3-in. penalty assigned to the normal sump level indicator. If the sump level indicator performs nominally, the pool will be 3 inches deeper than the flashing calculation assumes, and no overpressure credit is required. This perspective emphasizes that only the top face edges of the strainer plates would be subject to boiling in the event that containment pressure is entirely lost and only standard atmospheric pressure is available to suppress boiling at a temperature of 212°F.

As emphasized in the response to audit question 15, limiting conditions of temperature, pressure, and flow rate are assumed for each case analyzed, regardless of the time points at which these conditions may separately occur, in order to minimize the use of time-dependent accident scenario analyses that may be sensitive to assumed input conditions.

Overpressure credits for temperatures above 212°F of 1.7 psi for LBLOCA (approximately 10% of available containment pressure) and 0.07 psi for SBLOCA (less than 1% of available containment pressure) are applied only to suppress the unlikely occurrence of boiling at the top of the strainers and are not needed for NPSH or deaeration. Design basis plant calculations ZZ-525 [50] and ZZ-443 [51] demonstrate availability of large containment overpressure margins for LBLOCA and SBLOCA, respectively. The Ameren response to question 15 documents the small proportion of available containment pressure that is credited to suppress boiling at the top edge of the strainers.

Net Positive Suction Head (NPSH)

(18) Are the NPSH calculations for a small break LOCA modified to account for a lower pool level that could result from lack of injection from the accumulators and reduced inventory from the RCS? The NPSH margin results are shown on page 52 of Enclosure 3 of the LAR. The sump pool mass inputs are on page 51, and the discussion of Section 3.g.2 on page 44 states that the static head is constant and is based on a minimum large-break LOCA. This issue is related to the issue regarding submergence assumptions for flashing and degasification in the head loss and vortexing section.

See the entry for Item 15 of this Appendix.

Ameren Missouri Response:

Because the SBLOCA core analysis does not credit recirculation to achieve successful core cooling, a NPSH evaluation for SBLOCA was not performed. However, flashing and degasification calculations were performed for SBLOCA as described in responses to Items 15 and 19. A lower pool level established by EOPs was applied for SBLOCA strainer performance evaluations. Because sump recirculation does not begin until the normal sump level indicator measures 73 in., lack of accumulator injection and reduced

inventory from the RCS do not affect the minimum pool depth at sump swap over (SSO) for SBLOCA. For SBLOCA, the minimum pool depth is independent of accumulator injection and inventory from the RCS because sump swap-over (SSO) is completed at a given containment pool level instead of a RWST level. (Note that for LBLOCA, SSO is initiated and completed at a given RWST level.)

See the response to audit question 15 provided in this supplement for additional discussion of assumed SBLOCA pool level.

(19) On page 46 of LAR Enclosure 3, the submittal states that the CSS is not expected to start for a small break LOCA. Explain whether this has any effect on the headloss or NPSH calculations for small break LOCA scenarios.

See the entry for Item 15 of this Appendix.

Ameren Missouri Response:

Because the SBLOCA core analysis does not credit recirculation to achieve successful core cooling, a NPSH evaluation for SBLOCA was not performed. However, SBLOCA degasification evaluations used the thin bed head loss measured during a flow sweep performed at a plant flow rate of approximately 4600 gpm and a temperature of approximately 120 °F. Application of this head loss is conservative because: (1) a flow rate of 4600 gpm is approximately 3 times greater than the SBLOCA plant flow rate of 1500 gpm (full injection flow without containment spray), and (2) actual pool temperatures in the analysis where this head loss is applied are significantly greater than the 120 °F test condition. SBLOCA flashing evaluations only scale the measured head loss by a reduced operational flow rate, which is conservative and does not require perturbations to the debris bed characteristics, and it still conservatively applies test head losses measured at 120 °F to higher temperature accident conditions without correcting water properties.

See further discussion in the response to audit question 15 provided in this supplement.

Coatings

(20) Discuss the credit for previously unqualified coating system Carboline 193LF primer with 191HB topcoat as remaining adhered on page 77 of LAR Enclosure 3.

The licensee stated that there was a large amount of unqualified coatings predicted to transport to the strainer. The maximum mass predicted to deposit on the strainer resulted in negative margins in the code acceptable stress values for the strainer structural strength calculation. The licensee chose to reduce the stress by decreasing the mass load of unqualified coatings that can transfer to the strainer by reconsidering the potential for this unqualified coating system to remain in place following a LOCA. The licensee stated that the coating was initially applied as a qualified system but was later determined to be unqualified by the vendor because of potential issues with the preparation of the substrate to which the coating is applied. There were no issues identified with the qualification of the materials in the Carboline 193LF primer or 191HB topcoat. The licensee stated that they performed pull tests

during the 2018 refueling outage and found that the coating adhered at forces greater than those required by the American National Standards Institute standard. The NRC staff requested the licensee to provide the adhesion values. The licensee stated that the values were significantly higher than the acceptance limit. The licensee explained that the coating system will not be reclassified as qualified but will be evaluated to show that it is unlikely to contribute to strainer debris loading.

Coating adhesion was credited only for the structural calculation. However, the licensee may also consider the adhesion of this coating system to evaluate the particulate debris load that may result from FOAMGLAS® as discussed in items 10 and 33 of this Appendix, to support the assertion that strainer tests bound possible particulate loads. The licensee stated that they will provide the information in a supplement so that the NRC staff can come to a regulatory conclusion regarding the adhesion of the coating system following a LOCA and its potential effect on relevant calculations.

Ameren Missouri Response:

The adhesion testing was performed per ASTM D4541 Test Method E with a Defelsko PosiTest AT-M manual tester. The test sites were lightly sanded with fine sandpaper. Three 20mm dollies were then glued to each test site using Scotch Weld 420 epoxy. The epoxy cured for 18 hours. The dollies were then pulled, and the results are provided in Table Q20.1 below.

The Carboline 193LF/191HB coating system, applied over SP-3 prepared steel surfaces, was evaluated for adhesion performance using ASTM D4541 Test Method E. Thirty-six individual pull-adhesion tests were performed representing twelve locations with three replicates each. All test locations exhibited average adhesion strength in excess of 200 psi, which is the original design requirement stated in ANSI N5.12-1974, Protective Coatings (paints) for the Nuclear Industry. Coating system adhesion strength of greater than 200 psi has, in the past, been correlated to acceptable visual inspection by industry experts as documented in EPRI TR-1019157. This past EPRI research provides the basis for NRC accepted visual coatings inspection of safety-related coatings systems in lieu of containment wide physical testing.

The coatings pull tests described here were not performed until after strainer testing was completed, so particulate loads used in strainer testing assumed failure of all unqualified coatings systems. The coatings pull tests demonstrate that the strainer test results include a large inherent particulate margin with respect to particulate-induced head loss.

The unqualified coatings systems that were tested as described here are still identified as “unqualified” coatings in the Coatings Quality Inspection Program that is described in the response to question 41 that is provided in this supplement, and they continue to receive regular inspections as unqualified coatings, despite the favorable pull-test results.

Table Q20.1. Carboline 193LF/191HB coating system pull test results

Test Location	Azimuth	Line Number	Pull #1 (psi)	Pull #2 (psi)	Pull #3 (psi)	Average (psi)	Comments
1	272	KC-548-KBF-4"	246	729	604	526	Coating adhesion failure
2	273	KC-548-KBF-4"	916	604	918	813	Coating adhesion failure
3	305	KC-548-KBF-4"	1284	1373	1120	1259	Epoxy failure
4	310	KC-548-KBF-4"	1494	1177	1040	1237	Epoxy failure
5	315	KC-548-KBF-4"	1206	915	1171	1097	Epoxy failure
6	317	KC-548-KBF-4"	1020	883	762	888	Epoxy failure
7	15	KC-548-KBF-4"	789	449	480	573	Visual signs of cracking in the area prior to gluing dollies. Coating adhesion failure.
8	18	KC-548-KBF-4"	378	508	317	401	Coating adhesion failure
9	50	KC-548-KBF-4"	1364	897	1039	1100	On #3 pull, tester was a little cocked due to flange encroachment. Epoxy failure.
10	80	KC-548-KBF-4"	1124	940	954	1006	Epoxy failure
11	140	EG-145-HBC-4"	580	623	800	668	Coating adhesion failure
12	137	EG-148-HBC-4"	556	380	485	474	Coating adhesion failure

(21) Provide examples of how the scaling of surrogate debris volumes (silica sand and ground silica) to represent plant conditions was performed. Refer to the response to 3.h.3 on page 55 of LAR Enclosure 3.

The licensee stated that the LAR contains the particle size distributions and provided examples of how the coatings amounts were calculated to reflect the volume of coatings debris that could be generated in the plant. The licensee also provided examples of how the coatings were scaled to the test surrogates based on the surrogate density.

Ameren Missouri Response:

Ameren Missouri concurs; no further response is needed.

In-Vessel

(22) Provide clarification on the scenarios evaluated for the in-vessel evaluation, and the assumptions used in the evaluations. Refer to the description starting on page 102 of Enclosure 3 of the LAR. The information provided in the supplemental response dated May 27, 2021 (ADAMS Accession No. ML21147A222), did not provide the assumptions used to develop the fiber penetration and transport model used to calculate accumulation of fiber at the core inlet. Provide a list of

the scenarios considered for the in-vessel fiber transport evaluations. For each scenario, provide the equipment that is considered to be operating and the resulting assumptions for the scenario. It appears that at least two scenarios were modeled. One scenario is that two trains of the emergency core cooling system (ECCS) and CSS are operating while another is that two ECCS trains are operating along with one CSS train. The submittal states that it is assumed that 300 lbm of fiber is transported to two operating ECCS strainers. Provide the assumptions for transport to, and penetration through each strainer. Is debris transport proportional to flow? What are the flow rate assumptions for each strainer for each scenario? What are the flow rates through the in-vessel and bypass paths? How is sump switchover timing affected by the number of pumps running and how does this affect the results? Provide the assumptions for depletion rates of fiber in the pool. Describe the strainer filtration and shedding functions as function of debris loads.

The licensee provided a more detailed description of the cases that were evaluated for in-vessel debris effects. The following is a summary of the licensee's description. The cases evaluated were minimum possible sump switchover time with maximum safeguards, full dual train, and one CSS train failed. Cases were analyzed that considered recirculation via CSS back to the pool and no recirculation back to the pool. The cases were also analyzed using both the minimum and maximum plant-specific values of K_{split} from WCAP-17788-NP, "Comprehensive Analysis and Test Program for GSI-191 Closure (PA-SEE-1090)," Volume 1, Revision 0. Westinghouse, July 2015 (ADAMS Accession No. ML15210A669). Minimum sump volume was assumed in the evaluation. The calculations also assume that all fiber that transported to the core is retained there. CSS flow rates were minimized to reduce the amount of fiber recirculated through the system. CSS starts 7.75 minutes after RHR swapover in the plant, and that this timing is modeled in the fiber mass balance calculation. Any fiber that recirculates to the sump pool via containment spray is immediately assumed to be mixed in the pool. The full flow rate was maintained through the strainer during the penetration test to ensure some margin in the test results. Based on the discussions during the audit, the NRC staff understands the test conditions, the scenarios considered and modeled in the evaluation, and how the strainer fiber penetration test and evaluation relate to each other.

Ameren Missouri Response:

Ameren Missouri concurs; no further response is needed.

(23) Provide fiber penetration test results and penetration model assumptions that are based on the testing to the extent that the NRC staff can perform confirmatory calculations to validate the in-vessel fiber values used in the analysis.

The NRC staff reviewed the fiber penetration test report. The licensee performed three preliminary tests and a final quality assured test (Test 2) to quantify penetration. The NRC staff was unable to confirm that the model used to calculate the amount of penetration at various strainer loads was realistic or conservative compared to the test results. Specifically, the NRC staff identified that Equation A-50 in the strainer penetration test report (ALION-CAL-CEC-9345-003, Rev. 0) underpredicted the amount of fiber penetration when compared to strainer fiber penetration Test 2 data. The licensee stated that equation A-50 was not directly used to calculate the fiber amounts in the core for the submittal, but that the issue would be investigated because Equation A-50 was pertinent

for conditions in the tests. Differences between Equation A-50 and Test 2 results may indicate artifacts in estimates of parameters of empirical fiber penetration functions. The licensee will provide information in a supplement that includes details on the method used to calculate the fiber penetration as the strainer fiber loading changes so that the staff can confirm that the values are realistic when compared to the test results.

Ameren Missouri Response:

Details regarding the method used to calculate the fiber penetration as the strainer fiber loading changes will be provided in a forthcoming LAR supplement.

(24) The in-vessel evaluation did not provide any results or evaluation of cases where CSS does not run. Provide the basis for the assumption that CSS will start and continue to run for the duration of the strainer penetration analysis period. The NRC staff understands that the submittal states that once CSS is started it will not be secured until the containment pressure reaches 4.5 pounds per square inch gauge per emergency operating procedures.

The licensee stated that CSS will not be secured by any operating procedure until pressure is reduced below the threshold. The system might be turned off relatively early for smaller breaks that do not challenge debris limits. For the case questioned in this issue, redundancy and single failure considerations would ensure that one train of CSS is running. There is no design basis case where there would be no CSS running following a large break LOCA for at least the time until hot-leg switchover.

Ameren Missouri Response:

Ameren Missouri concurs; no further response is needed.

(25) On page 104 of LAR Enclosure 3, the licensee states that “full dual-train spray and dual-train ECCS was assumed and tested for the purpose of recirculation strainer performance characterization.” Explain what is meant by this statement. State whether it relates only to the in-vessel analysis or if it applies to other aspects of the submittal.

The licensee stated that it would clarify this statement in a supplement.

Ameren Missouri Response:

The paragraph where the citation is found explains the conservatism of assuming single spray-train operation from the perspective of in-vessel fiber accumulation; namely, less ingested fiber is diverted through sprays back to the pool when only one spray train operates. The last sentence is intended to offer a reminder that dual-train spray and full dual-train ECCS is conversely assumed in the in-vessel analysis to balance the fiber load on each strainer and maximize fiber penetration. No credit is applied for the unequal debris beds that would form with one spray system inoperable. Debris transport analyses and test velocities applied maximum flow rates where appropriate to maximize debris loads and head loss for any single LOCA scenario. In all strainer performance calculations, single-train operation is imposed to maximize debris loads on a single strainer. The cited sentence can be deleted without loss of content.

(26) On page 102 of LAR Enclosure 3, the submittal provides an evaluation of the decay heat for the WCAP-17788 reference plant as compared to the decay heat estimated using the American National Standards Institute/American Nuclear Society (ANSI/ANS)-5.1-1979 decay heat standard. The 1979 standard notes that a maximum positive uncertainty between 0- and 1,000-seconds post-shutdown is 20 percent, while the uncertainty from 1,000 seconds to a period significantly onward is 10 percent. Clarify whether the estimated value at 11.7 minutes (83.2 megawatt thermal (MWt)) includes any allowance for uncertainty, and if so, explain how much.

The licensee stated that the value for decay heat applies a 1 sigma uncertainty, which equates to 2 percent at the calculated value. The licensee stated that this information will be provided in a supplement.

Ameren Missouri Response:

The ANSI/ANS-5.1-1979 decay heat standard does not use a fixed uncertainty value such as applied in the 1973 standard or in the 10CFR 50 Appendix K methodology. Rather, it uses a statistical uncertainty of one standard deviation (1-σ) in each direction. The Callaway specific value of 83.2 MW_t at 11.87 minutes of subcritical decay time includes this 1-σ of uncertainty. For this specific decay time, the calculated decay heat value without uncertainty applied is 81.6 MW_t. Expressed as a percentage, the uncertainty is calculated to be, (83.2 MW_t – 81.6 MW_t) / (81.6 MW_t) x (100%) = 2%. The decay heat value and associated uncertainty were extracted from the Callaway decay heat calculation for Cycle 24, EC-44 Revision 0 [52].

Chemical Effects

(27) On page 102 of LAR Enclosure 3, the licensee states that testing demonstrated that chemicals will not form prior to 6 hours. In the supplement dated May 27, 2021, it is stated that chemical effects will not occur until at least. 24 hours. Clarify which of these statements reflects the earliest time at which chemicals may form with respect to the in-vessel evaluation.

The licensee stated that 24 hours is the earliest time that precipitation may occur based on the WCAP-17788-P test group that was used to represent Callaway. The licensee statement that chemicals will not form prior to 6 hours was related to the 6-hour sample time from the WCAP-17788-P autoclave tests where no precipitation was seen for any of the autoclave samples for Callaway. The licensee will clarify in a supplement that chemical precipitates are not expected before either 6 or 24 hours.

Additionally, the NRC staff noted that the licensee stated that the plant is represented by Test Group 36 from WCAP-17788-P. The maximum pH for Callaway was reported to be 7.6 and the post-LOCA pool is buffered with trisodium phosphate. The FSAR retains a bounding value of 9 when sodium hydroxide spray was the chemical used for post-LOCA sump buffering. Table 4-1 in WCAP-17788-P states that the maximum pH for Test Group 36 was 9.2. The NRC staff questioned the applicability of Test Group 36 to Callaway since the current plant specific pH value (7.6) is significantly lower than the maximum value for that test group. When considering precipitation for the in-vessel analysis there are competing effects due to increased aluminum corrosion and increased aluminum solubility at higher pH levels. The licensee stated that

additional trisodium phosphate test group data from WCAP-17788-P at lower pH levels for plants with similar aluminum amounts will be reviewed to verify that the assumption of 24 hours as the earliest precipitation time remains valid. The licensee stated that the results of the comparison will be included in a supplement.

Ameren Missouri Response:

Callaway is represented by WCAP-17788-P Test Group [___][1] that simulated post LOCA chemical conditions in an autoclave microenvironment representing Callaway containment structure and debris materials, metal-surface-area to liquid-volume ratios, pH buffer type and level, and temperature conditions. Neither the 6-hour samples nor the 24-hour samples indicated the presence of chemical products; therefore, chemical precipitates are not expected to form before either 6 or 24 hours. Because no additional samples were taken beyond 24 hours, 24 hours is the earliest time at which chemicals may conservatively be assumed to form with respect to the in-vessel evaluation.

The Callaway FSAR describes a pH range of 7 to 9, and Callaway presently uses baskets of dry Tri-Sodium Phosphate (TSP) buffering agent to achieve a post-LOCA well-mixed pH of between 7.0 and 7.6. Although pH as high as 9.0 would only be experienced at Callaway near the dissolving TSP buffer prior to recirculation, Test Group [___][1] was run near pH [____][1] to anticipate possibly higher metal corrosion at higher pH. WCAP-17788-P observed that:

[_____
_____
_____
_____
_____
_____][1]

These findings support the Test Group [___][1] bounding pH value of [___][1] and suggest that even potentially higher inventories of aluminum in solution under Callaway test conditions do not lead to evidence of chemical product formation within 24 hours. It is recognized that higher inventories of aluminum in solution may precipitate at later times as the recirculation pool cools.

Other TSP test groups in the WCAP-17788-P study, having similar metal-to-liquid ratios and pH similar to the Callaway operating range of 7 to 7.6, corroborate Ameren Missouri's conclusion that no significant chemical products are formed at either 6 hours or 24 hours. For example, Test Group [___][1] used a pH of [____][1], about the same zinc surface-to-volume ratio as Callaway, [_____][1] higher aluminum ratio, had about the same aluminum precipitant collected at 24 hours, and showed insignificant product formation with a sample drain time approximately 2 times longer than Callaway at 24 hours. Similarly, Test Group [___][1] used a pH of [___][1], [_____][1] higher zinc and [_____][1] higher aluminum surface-to-volume ratios as Callaway, had [_____][1] more aluminum precipitant collected at 24 hours, and showed insignificant product formation with a sample drain time somewhat lower than Callaway. These results support the conclusion that Callaway will not experience chemical product formation prior to 24 hours while operating in a nominal well-mixed pH range of 7 to 7.6.

[1] Proprietary information taken from WCAP-17788-P, "Comprehensive Analysis and Test Program for GSI-191 Closure (PA-SEE-1090)," Rev. 0, July 2015, that is used in the response to question (27) has been replaced with underline characters and is enclosed in square brackets in this enclosure, which may be disclosed to the public. As identified and justified in the letters that transmitted WCAP-17788-P (along with accompanying affidavits) to the NRC per References [60], [61], [62] and [63] to this enclosure, this information is proprietary to Westinghouse and should be withheld from public disclosure, in accordance with 10 CFR 2.390. A copy of the response that contains the proprietary information is provided in non-public Enclosure 6 to this LAR supplement.

(28) Figure 3.o-1, “Chemical Effects Evaluation Process Flow Chart,” indicates that near field settlement was credited in the chemical effects evaluation. Based on other discussions in the submittal, the NRC staff believes that the flow chart is in error. Confirm this or provide additional information that clarifies the treatment of near-field settlement for chemical effects (see page 112 of LAR Enclosure 3).

The licensee stated that the flow chart contained an error, and that the flow chart should have progressed through path 15 for no settlement instead of path 14 since settlement was not credited in the plant specific analysis. The licensee stated that headloss testing was performed such that full transport of chemical effects was ensured. The licensee stated that the flow chart will be corrected in a supplement.

Ameren Missouri Response:

The flowchart in Figure 3.o-1, as provided in Enclosure 3, Attachment 3-2 to this LAR supplement, has been corrected to show that the path for no near-field settlement credit (i.e., path 15) was taken in the chemical effects evaluation process.

Risk-Informed Basis

(29) Confirm that the technical acceptability of the licensee’s probabilistic risk assessments (PRAs), including, dispositions of the open peer review finding level facts and observations and key assumptions and sources of uncertainty, provided in the licensee’s 10 CFR 50.69 and National Fire Protection Association (NFPA)-805 LARs is applicable in its entirety to this request.

The licensee stated that information in the NFPA-805 and 10 CFR 50.69 applications is applicable to the PRA used in the risk-informed evaluation. The licensee stated that they recently had an updated 10 CFR 50.69 submittal, and that all associated facts & observations have been closed. The licensee will include this information in a supplement and confirm that it remains applicable to the risk-informed LAR.

Ameren Missouri Response:

Technical Adequacy Overview

The following information is provided on the technical acceptability of the Callaway Plant, Unit 1 (Callaway) Probabilistic Risk Assessment (PRA) for Internal Events, Internal Flooding, High Winds, Fire, and Seismic hazards in support of the requested licensing actions for approval of a risk-informed approach to address Generic Safety Issue (GSI)-191, "Assessment of Debris Accumulation on Pressurized-Water Reactor Sump and Performance," and support final resolution (as described in Ameren Missouri Letter ULNRC-06526 [1]), of Generic Letter (GL) 2004-02 [2] for Callaway Plant, Unit 1.

The Callaway Internal Events, Internal Flooding, High Winds, Fire, and Seismic PRA models described within this LAR are the same as those described within Ameren Missouri submittals regarding adoption of 10 CFR 50.69, “Risk-Informed Categorization and Treatment of Structures, Systems and Components for Nuclear Power Reactors” (Ameren Missouri Letter, ULNRC-06550 [3] and for adoption of TSTF-505-A, Rev. 2, “Technical Specifications Task Force Improved Standard Technical Specifications

Change Traveler" [4] (Ameren Missouri Letter, ULNRC-06688 [5]. These submittals include the Fire PRA, as updated through the PRA maintenance process, submitted to support adoption of National Fire Protection Association (NFPA) 805, "Performance-Based Standard for Fire Protection for Light Water Reactor Electric Generating Plants, 2001 Edition" (NFPA 805 [6]) (per Ameren Missouri Letter, ULNRC-05781 [7]). Each hazard model has the Internal Events model as the base with hazard specific initiators added and fault tree modifications and additions made as necessary. A screening assessment was performed for Other External Hazards.

The processes described in Ameren Missouri Letter ULNRC-06526 [1] for final resolution of GL 2004-02 [2], supplemented by the PRA models supporting the above applications, show the Callaway approach for final resolution of GL 2004-02 satisfies Regulatory Guide (RG) 1.174, "An Approach for Determining the Technical Adequacy of Probabilistic Risk Assessment Results for Risk-Informed Activities", Revision 3 [8], requirements for risk-informed plant-specific changes to a plant's licensing basis.

Ameren Missouri employs a multi-faceted approach to establishing and maintaining the technical adequacy and fidelity of PRA models for Callaway. This approach includes both a PRA maintenance and update process procedure and the use of self-assessments and independent peer reviews.

The Callaway PRA models are at-power models consisting of four hazard models – Internal Flooding, Fire, Seismic, and High Wind. Each hazard model has the Internal Events model as the base with hazard specific initiators added and fault tree modifications and additions made, as necessary. The models provide both core damage frequency (CDF) and large early release frequency (LERF). All five of these PRA models were developed using processes that continue to comply with RG 1.200 Revision 3 [9].

The following topics are addressed with respect to Callaway Unit 1 PRA technical adequacy:

- Requirements related to the scope of the Callaway PRA models.
- Peer review findings closure process.
- Technical adequacy of the Callaway PRA Internal Events and Internal Flooding model for this application.
- Technical adequacy of the Callaway PRA High Winds model for this application.
- Technical adequacy of the Callaway PRA Seismic model for this application.
- Technical adequacy of the Callaway PRA Fire model for this application.

Peer Review Findings Closure Process

All of the PRA models have been peer reviewed and assessed against RG 1.200 Revision 2 [10] endorsed guidance, including the clarifications provided therein, consistent with NRC RIS 2007-06, except that the Seismic PRA was assessed against American Society of Mechanical Engineers (ASME) / American Nuclear Society (ANS) RA-S CASE 1, "Case for ASME/ANS RA-Sb-2013" [11], as amended by the Nuclear

Regulatory Commission on March 12, 2018 [12] and approved in RG 1.200, Revision 3 [9].

The review and closure of finding-level F&Os was performed by an independent assessment team using the process documented in Appendix X to NEI 05-04, NEI 07-12 and NEI 12-13, "Close-out of Facts and Observations" (F&Os) [13] as accepted by NRC in the letter dated May 3, 2017 (ML17079A427) [14]. All of the reviews also met the requirements of NEI 17-07 Revision 2 [15].

The assessment team determined whether each F&O was closed through application of a PRA maintenance or upgrade activity, as defined by the ASME/ANS PRA Standard, or through application of a new method. Note that, per APC 17-13, Subject: “NRC Acceptance of Industry Guidance on Closure of PRA Peer Review Findings,” dated May 8, 2017 with attached Appendix X, a new method represents a fundamentally new approach in addressing a technical aspect of PRA. The results of the peer reviews and independent assessments have been documented and are available for NRC audit.

The PRA scope and technical adequacy is met for this application as the ASME/ANS PRA Standard requirements for all models are met at Capability Category II (CCII) or higher. There are no open Finding F&Os against any of the models discussed in this application, and all Finding F&Os have been independently assessed and closed using the processes discussed above. The resolved findings and the basis for resolution are documented in the Callaway PRA documentation and the F&O Closure Review reports.

In addition, all of the reviews described below comport with the requirements approved under NEI 17-07 Revision 2 and, while the individual reviews were conducted considering the requirements of RG 1.200 Revision 2, the conduct of these reviews remains consistent with the requirements and considerations in RG 1.200 Revision 3, with the exception that the more restrictive definition of PRA Upgrade from Revision 2 was used for characterizing PRA changes during F&O closure assessments.

There are no unreviewed Upgrades or Newly Developed Methods in the PRA models described in this application.

Scope of the Callaway PRA Models

The Internal Events, Internal Flooding, Fire, High Winds, and Seismic PRA models are at-power models (i.e., they directly address plant configurations during plant Modes 1, 2 and 3 of reactor operation). The models provide both core damage frequency (CDF) and large early release frequency (LERF). The PRA models described within this LAR are the same as those described within Ameren Missouri submittals regarding adoption of 10 CFR 50.69, “Risk-Informed Categorization and Treatment of Structures, Systems and Components for Nuclear Power Reactors” and for adoption of TSTF-505-A, Rev. 2, “Technical Specifications Task Force Improved Standard Technical Specifications Change Traveler”. These submittals include the Fire PRA, as updated through the PRA maintenance process, submitted to support adoption of National Fire Protection Association (NFPA) 805, "Performance-Based Standard for Fire Protection for Light Water Reactor Electric Generating Plants, 2001 Edition".

Note that the Callaway PRA models do not incorporate the risk impacts of other external events except for High Winds and Seismic. The treatment of non-modeled external risk hazards are discussed in Callaway Other External Hazards Screening notebook [16] which shows that all non-modeled external risk hazards screen based on approved

guidance. Non-mandatory Appendix 6-A of the ASME/ANS RA-Sa-2009 PRA Standard provides a guide for identification of most of the possible external events for a plant site. Additionally, NUREG-1855, “Guidance on the Treatment of Uncertainties Associated with PRAs in Risk-Informed Decision Making,” Revision 1, also provides a discussion of hazards that should be evaluated to assess uncertainties in plant PRAs and support the risk-informed decision-making process. Table D-1 of Regulatory Guide 1.200 Revision 3 (Ref [9]) provides a list of external hazards to be considered in risk-informed applications. All external hazards identified in these references were reviewed for Callaway, along with a review of information pertaining to the site region and plant design to identify the set of external events to be considered and evaluated. The information from the Callaway Final Safety Analysis Report (FSAR) and the Callaway PRA-OEH-ANALYSIS, "Other External Hazards: Screening Assessment Notebook," [16] were reviewed. No new site-specific or plant-unique external hazards were identified through this review. The list of hazards from NUREG-1855 and Table D-1 of Regulatory Guide 1.200 Revision 3 that were considered for Callaway are summarized in PRA-OEH-ANALYSIS.

Technical Adequacy of the Callaway Internal Events and Internal Flooding PRA Model

Contemporary risk-informed applications generally require that the PRA be reviewed to the guidance of RG 1.200 [10] for a PRA that meets Capability Category II (CCII) for the supporting requirements of the Internal Events at power ASME/ANS PRA Standard [17].

The information provided in this section demonstrates that the Callaway Internal Events PRA model (including Internal Flooding) meets the expectations for PRA scope and technical adequacy as presented in ASME/ANS RA-Sa-2009 and RG 1.200 to fully support the risk-informed approach to address GSI-191, "Assessment of Debris Accumulation on Pressurized-Water Reactor Sump and Performance," and final resolution of GL 2004-02 for Callaway Plant, Unit 1. The Ameren Missouri risk management process ensures that the PRA model used in this application reflects the as-built and as-operated plant for Callaway.

The Callaway Internal Events and Flooding hazard models used to supplement the assessment of GSI-191 impacts will use the peer reviewed plant-specific PRA models.

<u>Peer Review Summary</u>

The Internal Events/ Internal Flooding PRA was peer reviewed in April 2019. This peer review was a full-scope review of the technical elements of the Internal Events and Internal Flooding at-power PRA as documented in PWROG-19012-P [18]. As a full scope review, it included those supporting requirements (SRs) specified in PWROG-19020-NP [19] for implementation of the methodology for loss of room cooling modeling provided in PWROG-18027-NP [20].

An Independent Assessment of F&Os was conducted in November 2019 and documented in PWROG-19034-P [21]. The scope of the assessment included all Facts and Observations (F&Os) generated in the April 2019 peer review. All F&Os except for one were closed. Following, but unrelated to, incorporation of the method provided in PWROG-18027-NP into the Callaway PRA, this method was chosen by the PWROG and NEI to pilot the Newly Developed Methods (NDM) peer review process established in NEI 17-07 Revision 2. The remaining F&O from the April 2019 review was related to implementation of the methodology provided in PWROG-18027-NP which was in the NDM review process. Also, during the November 2019 independent assessment, two

F&O resolutions were determined to be upgrades to the Internal Events/ Internal Flooding PRA. Thus, a focused-scope peer review was required and performed during the same review week. Based on this focused scope peer review, one new Internal Events F&O was generated.

During February and March 2020, a new peer review, following the guidance in NEI 17-07 Revision 2, was conducted on the method provided in PWROG-18027-NP and documented in PWROG-19020-NP. Based on the results of this review, all applicable NDM attributes are met at CC I/II and there are no open peer review Findings against the method in PWROG-18027-NP.

In June 2020, an independent assessment of F&O resolution and a focused scope peer review, completing the review of PWROG-18027-NP implementation, were conducted on the Callaway Internal Events and Fire PRA models. The focused scope peer review determined that all of the SRs that were examined, including the SR associated with the F&O related to implementation of the method in PWROG-18027-NP, satisfy CCII or higher requirements as documented in AMN#PES00031-REPT-001 [22]. The independent assessment of F&Os included an assessment of all remaining open F&O Findings. The results of this review are documented in AMN#PES00031-REPT-002 [23].

There are no open peer review Findings for the Internal Events/ Internal Flooding PRA model.

Technical Adequacy of Callaway High Winds PRA Model

The information provided in this section demonstrates that the Callaway High Wind PRA model as well as the screening of Other External Hazards meets the expectations for PRA scope and technical adequacy as presented in ASME/ANS RA-Sa-2009 and RG 1.200 to fully support the risk-informed approach to address GSI-191, "Assessment of Debris Accumulation on Pressurized-Water Reactor Sump and Performance," and final resolution of GL 2004-02 for Callaway Plant, Unit 1. The Ameren Missouri risk management process ensures that the PRA model used in this application reflects the as-built and as-operated plant for Callaway.

<u>Peer Review Summary</u>

The High Winds PRA was peer reviewed in April 2019 and documented in PWROG-19022-P [24]. The scope of this work was to review the Callaway External Hazards Screening Assessment and High Winds PRA against the technical elements in Sections 6 and 7 of the ASME/ANS RA-Sa-2009 Standard and in RG 1.200.

An Independent Assessment of F&O resolution was conducted in November 2019 and documented in PWROG-19034-P [21]. The scope of the assessment included all F&Os generated in the April 2019 peer review. All F&Os were closed.

There are no open peer review Findings for the Other External Hazards Screening or the High Winds PRA model.

Technical Adequacy of Callaway Seismic PRA Model

The information provided in this section demonstrates that the Callaway Seismic PRA model meets the expectations for PRA scope and technical adequacy as presented in ASME/ANS RA-S CASE 1, Case for ASME/ANS RA-Sb-2013 [11] and RG 1.200 to fully

support the risk-informed approach to address GSI-191, "Assessment of Debris Accumulation on Pressurized-Water Reactor Sump and Performance," and final resolution of GL 2004-02 for Callaway Plant, Unit 1. The Ameren Missouri risk management process ensures that the PRA model used in this application reflects the as-built and as-operated plant for Callaway.

Peer Review Summary

The Seismic PRA was peer reviewed in June 2018 and documented in PWROG-18044-P [25]. This peer review was conducted against the requirements of the Code Case for ASME/ANS RA-Sb-2013, as amended by the Nuclear Regulatory Commission (NRC) on March 12, 2018 [12]. The Code Case is an approved alternative to Part 5 of ASME/ANS RA-Sb-2013 Addendum B, the ASME/ANS Probabilistic Risk Assessment (PRA) Standard.

An Independent Assessment of F&Os was conducted in March 2019. The scope of the assessment included all but two of the F&Os generated in the June 2018 peer review. All in-scope F&Os were closed as documented in PWROG-19011-P [26]. Also, in the March 2019 review documented in PWROG-19011-P, three SRs were the subject of a focused-scope peer review based on the closures of associated F&Os being assessed as upgrades. As a result of that peer review, the three SRs were determined to be met at CCII.

Subsequently, another Independent Assessment of F&Os was conducted in June 2020 and documented in AMN#PES00031-REPT-002 [23]. The scope of the assessment included all remaining F&Os generated in the June 2018 peer review. All F&Os were closed.

There are no open peer review Findings for the Seismic PRA model.

Technical Adequacy of Callaway Fire PRA Model

The information provided in this section demonstrates that the Callaway Fire PRA meets the expectations for PRA scope and technical adequacy as presented in ASME/ANS RA-Sa-2009 and RG 1.200 to fully support the risk-informed approach to address GSI-191, "Assessment of Debris Accumulation on Pressurized-Water Reactor Sump and Performance," and final resolution of GL 2004-02 for Callaway Plant, Unit 1. The Ameren Missouri risk management process ensures that the PRA model used in this application reflects the as-built and as-operated plant for Callaway.

The Internal Fire PRA model was developed consistent with NUREG/CR-6850, "Fire PRA Methodology for Nuclear Power Facilities," [27] to support a transition to National Fire Protection Association (NFPA) Standard 805, "Performance Based Standard for Fire Protection for Light Water Reactor Electric Generating Plants." and only utilizes methods previously accepted by the NRC. Callaway was approved to implement NFPA-805 in January 2014, and since that time, there have been numerous updates to the approved methods through the issuance of Fire PRA frequently asked questions and new or revised guidance documents. New or revised guidance is specifically addressed through the Callaway PRA maintenance and update process. The Ameren Missouri risk management process ensures that the PRA model used in this application reflects the as-built and as-operated plant for Callaway.

It should also be noted that, as part of transition to NFPA-805, there were several committed modifications and implementation items as documented in NFPA-805 LAR Attachment S, "Plant Modifications and Items to be Completed during Implementation," which described the Callaway plant modifications necessary to implement the NFPA 805 licensing basis. All NFPA-805 LAR Attachment S items have been implemented; therefore, there are no NFPA-805 open items impacting this application.

Peer Review Summary

The Fire PRA was prepared using the methodology defined in NUREG/CR-6850 and peer reviewed to ASME/ANS RA-Sa-2009 and RG 1.200 Revision 2 in October 2009. The review is documented in LTR-RAM-11-10-019 [28].

An Independent Assessment of F&Os was conducted in June 2019 and documented in AMN#PES00021-REPT-001 [29].

In June 2020, an independent assessment of F&Os and a focused scope peer review were conducted for the Callaway Internal Events and Fire PRA models. The focused scope peer review generated additional Fire PRA related F&Os as documented in AMN#PES00031-REPT-001 [22]. The independent assessment of F&Os included an assessment of all remaining open F&O Findings. As documented in AMN#PES00031-REPT-002 [23], all Finding F&Os were closed, including the Fire PRA Findings identified in the Focused Scope peer review.

In fulfillment of Commitment 50437 in Enclosure 4 to ULNRC-06550 (ML20304A456) and associated with closure of NFPA 805 LAR Table S-3 Implementation Item 13-805-001, a focused scope peer review was conducted in November 2020, as documented in AMN#PES00031-REPT-003 [30], for the resolution of Fire PRA Suggestion F&O FSS-B1-03, which a July 2019 F&O closure review had determined to be an upgrade, as documented in AMN#PES00021-REPT-001 [29].

As documented in AMN#PES00042-REPT-002 [31], the F&Os from this focused scope peer review were closed during an F&O closure review in February 2021. The results of this review formally closed Commitment 50437.

There are no open peer review Findings for the Fire PRA model.

Technical Acceptability Summary

The PRA scope and technical acceptability is met for this application, as the ASME/ANS PRA Standard requirements for all models are met at CCII or higher. There are no open Finding F&Os against any of the Callaway PRA models, and all Finding F&Os have been independently assessed and closed using NRC-approved processes as described above.

In addition, the reviews described above comport with the requirements approved under NEI 17-07 Revision 2, and while the individual reviews were conducted considering the requirements of RG 1.200 Revision 2, the conduct of these reviews remains consistent with the requirements and considerations in RG 1.200 Revision 3, with the exception that the more restrictive definition of PRA Upgrade from Revision 2 was used for characterizing PRA changes during F&O closure assessments.

There are no unreviewed Upgrades or Newly Developed Methods in the PRA models described in this application.

RG 1.174 Total Risk Considerations

Contemporary risk-informed applications generally require that the license amendment request (LAR) provides the plant-specific total core damage frequency and large early release frequency to confirm applicability of the limits of RG 1.174, Revision 1 [32]. (Note that RG 1.174, Revision 2 [33], issued by the NRC in May 2011, and RG 1.174, Revision 3 [8], issued by the NRC in January of 2018, did not revise these limits.)

The purpose of the following discussion is to demonstrate that the Callaway total CDF and total LERF are below the guidelines established in RG 1.174. RG 1.174 does not establish firm limits for total CDF and LERF but recommends that risk informed applications be implemented only when the total plant risk is no more than about 1E-4/ year for CDF and 1E-5/year for LERF. Demonstrating that these limits are met confirms that the Callaway analysis results support the licensing actions for approval of a risk-informed approach to address GSI-191, "Assessment of Debris Accumulation on Pressurized-Water Reactor Sump and Performance," and support final resolution of GL 2004-02 for Callaway Plant, Unit 1.

Technical Approach

The Callaway PRA model maintenance and update process includes “model of record” updates which are full scope model updates that include all documentation required by the ASME/ANS RA-Sa-2009 PRA Standard. As documented in Section 3.2.1 of Enclosure 2 to this supplement, the current models of record are Internal Events PRA Revision 9.01, Internal Flooding Revision 9.01, High Winds Revision 9.01, Fire Revision 9.01, and Seismic Events Revision 9.01. These models are used to determine the total baseline CDF and LERF results used to support this application.

Uncertainty associated with sump plugging probabilities contained in the PRA model is addressed in the assessment of Internal Events (including Internal Flooding) PRA Uncertainty notebook. Table Q29.1 provides the disposition contained in this notebook for the sump plugging modeling contained in the current models of record.

Table Q29.1. Sensitivity for Sump Plugging Assumptions in the Baseline PRA

Sources of Uncertainty and Assumptions	RICT Program Impact	Model Sensitivity and Disposition
Containment Sump/Strainer Performance		
All PWRs are improving ECCS sump management practices, including installation of new sump strainers at most plants.	Containment sump plugging is a concern with LOCAs of all sizes. The method employed to account for sump plugging is simplified in that it includes a single sump plugging probability per train (and includes CCF). An alternative method would be to define LOCA size-based probabilities for sump plugging, using WCAP-16882-NP, which provides event-dependent values.	A sensitivity was performed on the Callaway model where probabilities without limiting breaks were used in all cases (which minimizes the impact), all non-LOCAs were given the same value, and both trains were modeled to fail by single events. No change was seen, which indicates that the existing method does not introduce undue optimism or conservatism relative to other methods.

This assessment is intended to provide context to the uncertainty of sump blockage for the baseline model and is not related to the detailed, site-specific evaluation developed using the methodology described in this license amendment request. The uncertainty analysis associated with the method presented in this amendment request is addressed within the methodology and discussed elsewhere in this submittal. Since the methodology is not contained or modeled by the PRA models of record, the assessment of uncertainties associated with the method do not impact PRA models of record.

Table Q29.2 lists the Callaway CDF and LERF values that resulted from a quantification of the baseline Internal Events, Internal Flooding, High Winds, Fire and Seismic PRA models [34], [35], [36], [37], and [38], respectively). Other External Hazards are below accepted screening criteria and therefore do not contribute significantly to the totals [16].

Table Q29.2. Callaway PRA Model Baseline CDF and LERF Values		
PRA Hazard Model	**Baseline CDF (Events/Year)**	**Baseline LERF (Events/Year)**
Internal Events	4.46E-06	6.23E-08
Internal Flooding	6.52E-06	1.51E-08
High Winds	5.40E-06	2.50E-07
Fire	1.09E-05	4.63E-08
Seismic Events	4.01E-05	4.43E-06
Other External Events	No significant contribution	No significant contribution
TOTAL	6.74E-05	4.80E-06

The uncertainties in the results presented in Table Q29.2 are evaluated using standard aleatory uncertainty analysis by propagating the parameter distributions through the solution using an iterative sampling process. It is noted that the best estimate mean point-estimate values presented in Table Q29.2 are calculated using optimized ACUBE capabilities. The point estimate values in Table Q29.3 are generated using the EPRI UNCERT utility with varying levels of ACUBE processing. The mean values in Table Q29.3 below are generated using the Monte Carlo sampling process used by UNCERT, using varying levels of ACUBE processing, representing a sampled mean which addresses the State of Knowledge Correlation (SOKC). Due to the inability to fully post-process with ACUBE, these mean value estimates are conservative.

Table Q29.3. PRA Model Update 9.01 Parametric Uncertainty Analysis Results				
HAZARD	CDF (/yr)[1]		LERF (/yr)[1]	
	Point Estimate	Mean	Point Estimate	Mean
PRA-IE-UNCERT (Non-Flooding Internal Events)	4.47E-06	4.52E-06	6.23E-08	6.44E-08
PRA-IE-UNCERT_APP1, "Internal Flooding Uncertainty Analysis and Sensitivities"	6.50E-06	6.54E-06	1.51E-08	1.53E-08
PRA-IE-UNCERT_APP2, "Fire Uncertainty Analysis and Sensitivities"	1.21E-05	1.21E-05	5.55E-08	5.75E-08
PRA-IE-UNCERT_APP3, "Seismic Uncertainty Analysis and Sensitivities"	4.01E-05	5.34E-05	4.43E-06	5.93E-06
PRA-IE-UNCERT_APP4, "High Wind Uncertainty Analysis and Sensitivities"	5.97E-06	6.68E-06	2.55E-07	5.29E-07
Aggregate Risk[2]	6.91E-05	8.32E-05	4.82E-06	6.60E-06

Note 1: These values may vary slightly, depending on the selection of cutsets for ACUBE.
Note 2: Including uncertainties and State of Knowledge Correlation.

For PRA model update 9.01, the SOKC was addressed by the performance of a parametric uncertainty analysis for each hazard using the UNCERT code with a typical sample size in the tens of thousands. The SOKC becomes a concern for parameters that are represented by multiple basic events, with probabilities from the same data set, occurring in the same cutset and was addressed by linking such basic events to the same type code in the CAFTA database. The analyses compared the resulting mean value of the risk metric, as determined by UNCERT, to the corresponding point estimate to conclude that the point estimate is an acceptable representation of the mean value.

In relation to the information provided in Table Q29.3, above, the same information was provided in response to NRC Audit Question APLA-06 – Total Risk Consideration, in Attachment 8 of Enclosure 1 to ULNRC-06678 [39] related to the submittal for adoption of 10 CFR 50.69. Subsequently, the NRC Staff issued RAI 01, Use of Mean Core Damage

Frequency and Large Early Release Frequency Values and Consideration of the State of Knowledge Correlation [40]. It should be noted that the clarifications provided in the response to RAI 01, found in the Enclosure to ULNRC-06689 [41] are also applicable to this application request.

As demonstrated in Tables Q29.2 and Q29.3, the total CDF and total LERF are within the guidelines set forth in RG 1.174 and support small changes in risk that may occur under approval of a risk-informed approach to address GSI-191 and GL 2004-02 (Ref [2]) for Callaway Plant, Unit 1.

(30) LAR Enclosure 2, page 23, a note states, in part, "The PRA model risk metrics provided herein have not been adjusted to account for an open modeling issue recently identified in the Callaway PRA." Discuss this open modeling issue providing details and demonstrating the impact, or lack of impact, on this application.

The licensee stated that an update was made to the PRA that will allow removal of this note. The modeling issue has been corrected. The licensee also stated that the risk does not change significantly when using the updated model. An updated table and a description of the issue and how it was corrected will be provided in a supplement.

Ameren Missouri Response:

The note to the table of Baseline CDF and LERF metrics provided on page 23 in Section 3.2.1 of Enclosure 2 to this supplement has been removed consistent with resolution of the associated modeling issue and issuance of the current PRA model of record 9.01.

The modeling issue was related to capabilities of the three 4160-Vac electrical busses that support the non-safety related Service Water system. The electrical system has auto-transfer capabilities that allow for continued operation of Service Water components in the event of the loss of a given electrical buss. However, the auto-transfer capabilities do not support transfers in both directions between all three busses. One of the auto-transfers only works in one direction. Due to a misinterpretation in reading the electrical drawings, the unidirectional auto-transfer was originally modeled in the wrong direction. To resolve this issue, the fault tree modeling was corrected to represent the auto-transfer in the correct direction.

(31) It is unclear how first isolation valves are defined and what the required pre-scenario positions or post-initiating event requirements for these valves would be. The LAR states that valves beyond the first isolation valve are considered secondary risk contributors. To take credit for a valve isolating a break[,] it would have to be normally closed and isolated from RCS pressure or close rapidly upon a LOCA. In that case, significant debris generation could occur prior to the valve closing. If debris generation occurs, but the leak can be isolated, recirculation may not be required. Provide a more detailed definition of "first isolation valves" and how these scenarios were evaluated. Provide additional information on the assumption that the isolation valve failure rate is conservatively estimated to be 1.11E-03. Refer to Enclosure 3, Attachment 3-3, page 146.

The license stated that the failure rate comes from NUREG/CR-6928, "Industry-Average Performance for Components and Initiating Events at U.S. Commercial Nuclear Power Plants." The licensee stated that it will determine the impact of the use of plant-specific failure rates. The licensee stated that in all ECCS injection lines, the first valve is a check valve that is normally closed at power. No local manual valves are credited to move as the first isolation valve in the risk-informed analysis and all manual valves defined as first Class 1 isolation valves are normally closed at power. The licensee will add a definition of first isolation valve, and indicate that these valves are normally closed, via a supplement.

Ameren Missouri Response:

The first isolation valve is the first of the two ASME Class 1 boundary valves, as defined in 10CFR50.55a(c). Risk contributions from weld breaks that occur between the first and second ASME Class 1 boundary valves are discussed in ULNRC-06526 [1], Enclosure 3, Attachment 3-3, Section 8.1, "Failure of Isolation Valves." That section of the LAR discusses a subset of ASME Class 1 welds inside containment that reside on and between the first and second boundary valves, as suggested by the solid dots in Figure Q31.1. Core damage attributed to breaks at these locations is quantified as a secondary risk contributor. Nonisolable weld breaks included in the Baseline risk evaluation are denoted in Figure Q31.1 as open dots. Note that many of the isolation valves and the welds that connect them to Class 1 piping are located inside or near the bioshield wall. CASA Grande calculates debris quantities for all welds included in a calculation input list, so debris quantities generated separately for nonisolable and isolable welds already account for pipe size and spatial location.

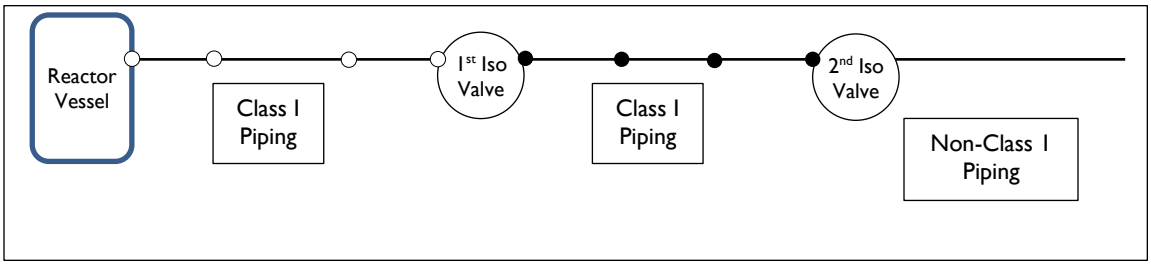

Figure Q31.1. Location of isolable weld locations (solid dots) and nonisolable weld locations (open dots) with respect to first and second isolation valves.

Two primary conservatisms are inherent to the treatment of isolable weld breaks:

1. Duplication of the entire NUREG/CR-1829 LOCA frequency to a much smaller weld population, and
2. Assignment of a common industry valve failure probability (1.11E-03) to all first isolation valves that protect isolable weld breaks, regardless of whether the valves are normally closed during operation.

As noted in the LAR, NUREG/CR-1829 break frequencies do not strictly apply to isolable welds. However, the approach of duplicating the full pipe-break LOCA frequency was applied for simplicity and consistency with analysis methods applied to non-isolable weld breaks.

In the final tabulation of risk contributions from isolable breaks, an on-demand fail-to-close failure probability of 1.11E-03 is applied to all first isolation valves. The valve failure probability of 1.11E-03 is the highest fail-to-open/close rate, per NUREG/CR-6928, "Industry-Average Performance for Components and Initiating Events at U.S. Commercial Nuclear Power Plants," February 2007, of the ASME Class 1 boundary valves listed in Table Q31.1. Failure rates for valves that are normally closed during operation are even lower than the assumed rates for failure during remote valve actuation, so failure of a normally closed valve is not considered further. Implicit to the analysis of isolable weld-break scenarios is the expectation that a properly closed valve limits loss of primary coolant inventory to the containment floor and precludes the need for sump recirculation as a result of a weld break LOCA.

Ameren Missouri takes plant and industry operating experience and periodically Bayesian updates the failure probabilities used in the PRA. These values increase or decrease with each update, and the current fail-to-close failure probabilities for the four valve types used as ASME Class 1 boundary valves shown in Table Q31.1 are: Air-Operated Valve (AOV) 1.62E-03, Check Valve (CKV) 3.01E-04, Motor-Operated Valve (MOV) 2.63E-04, and Solenoid-Operated Valve (SOV) 1.29E-03. If the single highest failure probability (AOV 1.62E-03) is applied to all valves regardless of type using the same conservative logic as the Baseline risk quantification, the isolable-weld-break risk contribution would increase by (1.62E-03 – 1.11E-03) / 1.11E-03 x 100 = 46%. However, if the more applicable failure probability for Check Valves is applied (CHK 3.01E-04), the isolable-weld-break risk contribution would decrease by (1.11E-03 – 3.01E-04) / 1.11E-03 x 100 = 73%. The failure probability of valves already closed during operation to maintain isolation during an isolable-weld break is generally less than 1E-04, so additional credit could be applied to individual valves to further reduce estimated risk contributions. In some cases, closure of isolation valves during operation precludes or greatly reduces break frequency in welds beyond those valves because those welds are not subject to RCS pressures. These additional credits are not applied in the Baseline risk evaluation.

Table Q31.1 lists all ASME Class 1 valves that either remain closed during normal operation or are capable of automatic closure, consistent with the requirements for Class 1 boundary valves. Not listed in Table Q31.1 are vent, drain, or sample valves whose piping is restricted by a 3/8-inch orifice. In these cases, the Class 1 boundary is the orifice and not the valve. Small 3/8-inch openings cannot generate a significant amount of debris and do not require recirculation to mitigate. Therefore, they are not included in the analysis so that the total conserved break frequency assigned to larger isolable weld breaks is not artificially minimized. Table Q31.1 indicates the status of each serial valve

pair during full-power operation. Row entry numbers are used for convenient reference to Table Q31.1 but have no formal significance with respect to valve identification.

Table Q31.1 clarifies that in most ECCS injection lines, the first valve is a check valve that is either normally closed at power or has no flow at power and is capable of automatic actuation. First isolation manual valves are already closed during normal operation. No manual valves are credited to change state as the first isolation valve in the risk-informed analysis of isolable breaks. Only one isolation valve, a 3-inch, air-operated globe valve on the regenerative heat exchanger (row 37) is normally open during operation, but it is capable of automatic actuation.

The location specific debris generation potential of welds protected by this valve has not been examined, but debris from all 3-in breaks is within the deterministic strainer test limit.

The full-power status of check valves (CKV) listed in Table Q31.1 denotes the condition of fluid flow that can either be “No Flow” or “With Flow.” All check valves are capable of automatic closure actuated by the flow/pressure conditions without any other signal. The presence of fluid flow during operation does not affect the reliability of check valves. The air operated valves (AOV) shown "Open With Flow" in Table Q31.1 are capable of automatic closure and have a normal closure time of 4.6 to 13.9 seconds with a maximum allowed time of 15.0 seconds. As noted in the table, only valves of 3-in. and smaller are open with flow during operation, and their debris generation potential is limited by both the line size and by relatively rapid, reliable valve closure.

Table Q31.1. ASME Class-1 Isolation Valves.							
	1st Off	**2nd Off**	**Valve Type**	**Size**	**Full Power Status**	**Description**	**Actuation**
	RHR Suction						
1	BBPV8702A	EJHV8701A	MOV	12"	Closed	Loop 4 RHR Suction	Interlocks to prevent opening with RCS pressure greater than 360 psig
2	BBPV8702B	EJHV8701B	MOV	12"	Closed	Loop 1 RHR Suction	Interlocks to prevent opening with RCS pressure greater than 360 psig
	Hot Leg						
3	BB8949E	EMV0003	CKV	2"	No Flow	Loop 1 Safety Injection	Capable of auto closure
4	BB8949B	EMV0001	CKV	6"	No Flow	Loop 2 Safety Injection and RHR	Capable of auto closure
5	BB8949C	EMV0002	CKV	6"	No Flow	Loop 3 Safety Injection and RHR	Capable of auto closure
6	BB8949D	EMV0004	CKV	6"	No Flow	Loop 4 Safety Injection	Capable of auto closure
7	BB8949B	EJ8841A	CKV	6"	No Flow	Loop 2 Safety Injection and RHR	Capable of auto closure
8	BB8949C	EJ8841B	CKV	6"	No Flow	Loop 3 Safety Injection and RHR	Capable of auto closure
	Cold Leg						
9	BB8948A	EP8956A	CKV	10"	No Flow	Loop 1 Safety Injection and Accumulators	Capable of auto closure
10	BB8948B	EP8956B	CKV	10"	No Flow	Loop 2 Safety Injection and Accumulators	Capable of auto closure

Table Q31.1. ASME Class-1 Isolation Valves.							
	1st Off	2nd Off	Valve Type	Size	Full Power Status	Description	Actuation
11	BB8948C	EP8956C	CKV	10"	No Flow	Loop 3 Safety Injection and Accumulators	Capable of auto closure
12	BB8948D	EP8956D	CKV	10"	No Flow	Loop 4 Safety Injection and Accumulators	Capable of auto closure
13	BB8948A	EPV0010	CKV	10"	No Flow	Loop 1 Safety Injection and Accumulators	Capable of auto closure
14	BB8948B	EPV0020	CKV	10"	No Flow	Loop 2 Safety Injection and Accumulators	Capable of auto closure
15	BB8948C	EPV0030	CKV	10"	No Flow	Loop 3 Safety Injection and Accumulators	Capable of auto closure
16	BB8948D	EPV0040	CKV	10"	No Flow	Loop 4 Safety Injection and Accumulators	Capable of auto closure
17	BB8948A	EP8818A	CKV	10"	No Flow	Loop 1 Safety Injection and Accumulators	Capable of auto closure
18	BB8948B	EP8818B	CKV	10"	No Flow	Loop 2 Safety Injection and Accumulators	Capable of auto closure
19	BB8948C	EP8818C	CKV	10"	No Flow	Loop 3 Safety Injection and Accumulators	Capable of auto closure
20	BB8948D	EP8818D	CKV	10"	No Flow	Loop 4 Safety Injection and Accumulators	Capable of auto closure
	Charging						
21	BB8378A	BB8378B	CKV	3"	Open With Flow	Loop 1 CVCS Normal Charging	Capable of auto closure
22	BB8379A	BB8379B	CKV	3"	Open With Flow	Loop 4 CVCS alternate Charging line	Capable of auto closure
	Boron Injection						
23	BBV0001	EM8815	CKV	1.5"	No Flow	Loop 1 SIS Boron Injection	Capable of auto closure
24	BBV0022	EM8815	CKV	1.5"	No Flow	Loop 2 SIS Boron Injection	Capable of auto closure

Table Q31.1. ASME Class-1 Isolation Valves.							
	1st Off	**2nd Off**	**Valve Type**	**Size**	**Full Power Status**	**Description**	**Actuation**
25	BBV0040	EM8815	CKV	1.5"	No Flow	Loop 3 SIS Boron Injection	Capable of auto closure
26	BBV0059	EM8815	CKV	1.5"	No Flow	Loop 4 SIS Boron Injection	Capable of auto closure
	Additional Isolation Valves						
27	BBV0121	BBV0120	CKV	2"	With Flow	RCP A Seal Injection	Capable of auto closure
28	BBV0151	BBV0150	CKV	2"	With Flow	RCP B Seal Injection	Capable of auto closure
29	BBV0181	BBV0180	CKV	2"	With Flow	RCP C Seal Injection	Capable of auto closure
30	BBV0211	BBV0210	CKV	2"	With Flow	RCP D Seal Injection	Capable of auto closure
31	BBV0008	BBV0009	Manual Globe Valve	2"	Closed	Crossover leg A drain	Manual valve, requires local operation
32	BBV0028	BBV0029	Manual Globe Valve	2"	Closed	Crossover leg B drain	Manual valve, requires local operation
33	BBV0047	BBV0048	Manual Globe Valve	2"	Closed	Drain off CVCS letdown	Manual valve, requires local operation
34	BBV0066	BBV0067	Manual Globe Valve	2"	Closed	Crossover leg D drain	Manual valve, requires local operation
35	BGHV8154A	BGHV8153A	Solenoid Globe Valve	1"	Closed	Excess Letdown	Fails closed
36	BGHV8154B	BGHV8153B	Solenoid Globe Valve	1"	Closed	Excess Letdown	Fails closed
37	BGLCV0460	BGLCV0459	AOV Globe Valve	3"	Open With Flow	CVCS Letdown to Regen HX	Closes on low pressurizer level / Fails closed

Table Q31.1. ASME Class-1 Isolation Valves.							
	1st Off	**2nd Off**	**Valve Type**	**Size**	**Full Power Status**	**Description**	**Actuation**
38	BBV0084	BGHV8145	CKV/AOV Globe Valve	2"	CKV No Flow/AOV Closed	PZR Auxiliary Spray	CKV capable of automatic closure/AOV Fails Closed
39	BB8949B	EJ8841A	CKV	6"	No Flow	RHR Injection	Capable of auto closure
40	BB8949C	EJ8841B	CKV	6"	No Flow	RHR Injection	Capable of auto closure
41	BBV0233	Blind Flange	Manual Globe Valve	1"	Closed	Reactor Head Vent	Manual valve, requires local operation

(32) Explain the rationale behind performing the sensitivity study to add insulation at valves? Is there uncertainty about the amount of insulation on valves? How many valves are modeled? For which breaks are the valves within the ZOI? Explain why a sensitivity study was not developed for fiber amount that could be evaluated in a more straightforward manner. For example, simply adding and subtracting some percentage of fiber with respect to the baseline could provide a better generic understanding of sensitivity to fiber amount. Refer to page 152 of LAR Enclosure 3.

The licensee stated that the valves are insulated. The licensee stated that CASA Grande assumes that there is additional insulation included at the valves because of the physical layout of the insulation system. The initial insulation amounts at valve locations were developed for South Texas Project (STP), and the Callaway values could be different. Therefore, the licensee considered it appropriate to perform a sensitivity study for the valve insulation amounts. The licensee stated that they performed a sensitivity study for the insulation at valves and pipe hangers and noted that the changes are small. The licensee also noted that there is 50 lbm fiber margin included for every break. Item 38 is related to this issue. The licensee will provide a description of the logic for performing this sensitivity study and how it was performed in a supplement.

Ameren Missouri Response:

Valve locations and sizes are identified during CAD model development, so debris contributions from damaged insulation on valve bodies can be treated as a break-specific plant-specific phenomenon without any need for global fiber insulation inflation factors. Variabilities do arise in field applications of insulation to oddly shaped valve bodies that range from wrapping with strips of insulation material to manufacturer-designed housings and cassettes containing body-fitted fiberglass. An insulated valve appears as a local “node” having a maximum dimension larger than the adjacent pipe that is covered with insulation of similar thickness as found on the adjacent pipe. The sensitivity case (referred to in the NRC question) was performed to confirm that high-fidelity spatial descriptions of valve-body insulation are not required in the Baseline analysis.

CASA Grande allows a user to account for additional insulation applied on valve bodies to better conform to valve geometry. There are no embedded default quantities or factors in the debris generation simulation. Rules for adding valve insulation as a function of valve size initially developed for South Texas Project (STP) were not applied to Callaway because insulation installation practices at the sites may have been different.

In the Baseline debris generation analysis, all valve locations are insulated with the same type and thickness of insulation applied to the surrounding straight pipe, as if the valve was not present. The sensitivity study added, at every valve location, cylindrical annular insulation collars having the same thickness and type as the pipe insulation, an internal diameter equal to the outside pipe diameter, and a length that was scaled by pipe size to recognize that larger pipes require larger valves. The added insulation, centered at the valve location, effectively doubles the amount of insulation present along the length of every valve body. This treatment is judged to be reasonable and conservative because no insulation exists through the valve body centerline as assumed in the baseline and because the added insulation compensates for the valve-body surface area that is larger than the pipe segment surface area. The Baseline valve insulation (assumed to be on the pipe) and the duplicated insulation added in the sensitivity (also assumed to be on

the pipe) can each be visualized as an amount of insulation sufficient to cover each side of a symmetric valve body.

An increase in the quantity of insulation above what was assumed in the Baseline debris generation analysis may cause non-critical welds to become critical welds or reduce critical break sizes for critical welds already identified. Both effects can increase ΔCDF. Repetition of the full risk quantification process with added valve insulation in place using the continuum break model, 50-lbm of operational fiber margin, and 25-yr geometric break frequency aggregation consistent with the Baseline shows that the mean ΔCDF increases to 5.4E-07 per year above the baseline mean of 5.37E-07 per year, i.e., a change of approximately (5.4E-07 – 5.37E-07) / 5.37E-07 x 100 = 0.56%. This sensitivity case demonstrates that a negligible risk increase would be incurred by adding additional valve insulation beyond the Baseline assumption of fully insulated piping at all valve locations.

The 50-lbm operational fiber margin explained in the response to audit question 38 was not introduced for the purpose of compensating for additional valve insulation or other debris-target uncertainties, but the magnitude of risk increase caused by the operational margin (approximately a factor of 2) clearly exceeds the very small risk increase associated with this sensitivity case. The operational fiber margin does provide a generic understanding of risk sensitivity to fiber amount, as suggested in the audit question.

(33) LAR Enclosure 3, page 12, the licensee states, in part,

> FOAMGLAS® is located on the steam generator blowdown system and Residual Heat Removal (RHR) system. FOAMGLAS® was discovered in containment in the summer of 2019 and is not evaluated for debris generation. Approximately 146 ft^3 or 1167 lbm of FOAMGLAS® are in containment. In the analysis documented in this LAR, low density fiber glass (LDFG) is modeled at the location of FOAMGLAS®. This results in an over prediction of destroyed LDFG and risk, but an under prediction of destroyed particulate at break locations that have the potential to destroy FOAMGLAS®

In a supplement the licensee will explain if the “under prediction of destroyed particulates at break locations that have the potential to destroy FOAMGLAS®” has an effect on change in risk estimates presented in the application. See Item 10 for a discussion of this issue.

<u>Ameren Missouri Response</u>:

Refer to the response to Question 10 regarding particulate margin. There is adequate particulate margin in the strainer test results and Baseline risk quantification to accommodate up to 92% total degradation of FOAMGLAS® into very fine particulates. Physical characteristics and debris generation geometry suggest that FOAMGLAS® will not experience this high damage fraction. Therefore, there is no quantitative increase in Baseline ΔCDF caused by the presence of FOAMGLAS® in containment.

Probabilistic Risk Assessment (PRA)

(34) Discuss how the following potential initiating events were examined and accounted for, or excluded with respect to the risk-informed analysis: (1) Internal fire LOCAs, (2) Internal flood LOCAs, (3) Non-piping LOCAs (e.g., manway covers, valves, control element drive assemblies, and instrument lines), (4) water hammer-induced LOCAs.

The licensee stated that the debris generation from the initiating events discussed in this issue are either bounded or approximated by results from previously evaluated welds or are too small to have a significant effect on risk. The licensee also stated that water hammer is not postulated to result in a LOCA and that internal fires and floods do not create consequential piping LOCAs inside containment. Non-piping LOCAs inside containment are limited to locations where debris generation is insufficient to challenge recirculation sump functionality. The licensee also noted that it takes a very large break to exceed the maximum analyzed fiber load. The NRC staff stated that the risk analysis should have screening arguments for all potential initiating events, including those listed in this question, to assure that all potential failure modes were assessed. A thorough initiating event screening ensures that the analysis is complete. The licensee will provide a description of how these initiating events were screened out in a supplement.

Ameren Missouri Response:

Callaway recirculation strainers were tested under LBLOCA flow rates using mixed debris compositions including particulates, chemical products, and up to 300-lbm of fiber. The 300-lbm fiber limit is applied as the RoverD criterion separating deterministic strainer performance and residual risk. The volume inside a spherical DEGB ZOI is $V = (4\pi/3)R^3$. NUKON® fiber glass has a potential damage radius of $R = 17D$, where D is the inside diameter of the broken pipe. If the ZOI were completely filled with fiberglass insulation and the limiting volume is $V_{max} = 300lbm/(2.4lbm/ft^3) = 125ft^3$, the corresponding break diameter would be

$$V_{max} = (4\pi/3)(17D_{max})^3$$
$$D_{max} = \left[\frac{3V_{max}}{4\pi}\right]^{1/3} \times \frac{12\,in/ft}{17}$$

or, $D_{max} = 2.19$ in., which is larger than the SBLOCA maximum size of 2-inches. Of course, containment is not completely filled with fiberglass insulation and not all of the damaged fiberglass is transportable, so the first critical breaks in the Callaway containment that begin to exceed the 300-lbm test limit are approximately 9 inches in diameter. This example demonstrates that energy release comparable to a 2-in RCS pipe break cannot generate enough debris to exceed the tested strainer capacity. Also, some non-piping LOCA events are postulated to occur in very specific locations that may not contain significant fiber insulation.

The 300-lbm fiber limit also includes conservatism inherent to tested LBLOCA flow rates (approximately 8,750 gpm) because recirculation flow rates required to respond to many of the postulated non-piping LOCA do not include containment spray and require relatively small recirculation rates to maintain cooling after the RWST inventory is depleted. Lower recirculation flow reduces debris transport and reduces debris bed head loss for a fixed quantity of debris. See the response to audit question #35 for a discussion of how low-flow recirculation requirements for all non-piping LOCA events that

are handled by a SBLOCA safety system response compensate for uncertainty in debris generation for non-pipe LOCA with effective sizes greater than 2-in. diameter. Additional consideration is warranted for non-piping LOCA events that initiate sprays because the required recirculation flow for a single sump strainer can approach one half of the LBLOCA strainer test flow rates.

The following accident scenarios have some potential to require sump recirculation after the RWST is depleted. The time required for SSO for non-piping LOCA events varies by coolant loss rate, operator actions, and recirculation flow requirements. The two attributes of limited debris generation potential and low recirculation flow rate are used to screen many of these events from further consideration in the risk-informed analysis.

Internal Events

Reactor Pressure Vessel Rupture

This event is assumed to be beyond design and mitigation capabilities, and therefore results directly in core damage as part of the existing baseline CDF. Because this event is already assumed to result directly in core damage, the availability of the containment sumps is irrelevant, and RPV rupture cannot contribute to ΔCDF or ΔLERF for GSI-191.

LOCA – Piping

Inside Containment: Pipe break LOCAs inside containment are the subject of this license amendment application and are addressed by the methodology presented in this application.

ISLOCA: Interfacing System LOCA (ISLOCA) events occur at high-low pressure system interfaces. The weak locations in the low pressure system (pump seals, gaskets, access ports, etc.), where the LOCA is assumed to occur in the low pressure system, are located outside containment or are located within a closed portion of the system (e.g., RCP thermal barrier tubes). The possibility of a consequential, low pressure system pipe break inside containment (versus at the assumed weak points), in conjunction with the break being in the correct location and of a size necessary to generate sufficient debris to impact sump performance, is negligible. Therefore, ISLOCA events are screened from consideration.

LOCA – Non-Piping (e.g., manway covers, valves, control element drive assemblies, and instrument lines)

Non-piping LOCAs associated with RCP seal LOCA, failed-open pressurizer PORVs or pressurizer safety valves, or pressurizer PORVs being open to establish feed-and-bleed core cooling were evaluated based on the location of the LOCA and low required recirculation rates.

- RCP seal LOCAs are located at the RCPs, and mitigation is handled as SBLOCA by the safety system response. RCP seal LOCAs have limited capability to generate problematic debris, comparable to a 2-in. line rupture, and have lower recirculation flow rate requirements than the LBLOCA test conditions. The combination of reduced debris transport and reduced head loss afforded by low recirculation flow rates eliminates sump performance failures for this event.

- Pressurizer PORVs and safety valves relieve to the pressurizer relief tank (PRT). The PRT can be vented to the normal containment sump or through the blowout discs designed to relieve (at the location of the tank) between 86 to 100 psig (FSAR Table 5.4-13 [53]). PRT vent actuation is handled as a SBLOCA by the safety system response due to flow limitations from the size and number of valves. PRT pressure relief events have limited capability to generate problematic debris because of the PRT location in containment and have lower recirculation flow rate requirements than the LBLOCA test conditions. The PRT is located outside of the bioshield along the containment wall at a location that is relatively isolated from insulated piping. CAD model analysis shows that a 4-in, 17D ZOI does not impact any insulated pipes near the PRT and a 12-in, 17D ZOI (shown in Figure Q34.1) damages only 33 ft^3 (79 lbm) of fiber. While the damage potential of PRT venting to containment through the rupture disks is uncertain, it is much less than the damage potential of a 12-in LBLOCA.

  The combination of reduced debris transport and reduced head loss afforded by low recirculation flow rates eliminates sump performance failures for non-piping LOCA events.

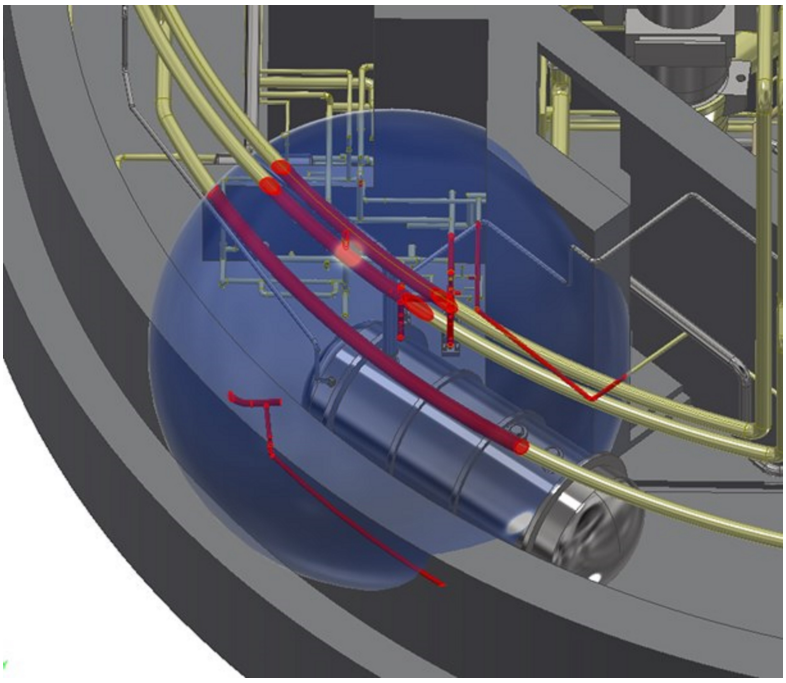

Figure Q34.1. Limited fiberglass insulation damage caused by 12-in. 17D ZOI at the Pressurizer Relief Tank.

- Reactor head vent valves relieve to the reactor coolant drain tank through small bore piping reducing to tubing prior to entering the tank. The relief path from the reactor head vents is too small to generate debris quantities that exceed the tested strainer capacity. This rationale also applies to all other instrument/tubing connected to the RCS.

- Rod ejection is a SBLOCA condition that could occur at the RV head, which is located inside the cavity and surrounded by, but isolated from the bioshield. Debris generation (RMI and welded steel-encapsulated fibrous insulation coupons only) would be confined to the cavity and would not readily transport to the

recirculation sump. SBLOCAs have limited capability to generate problematic debris, regardless of their location in containment, and have lower recirculation flow rate requirements than the LBLOCA test conditions. The combination of reduced debris transport and reduced head loss afforded by low recirculation flow rates eliminates sump performance failures for this event.

- Valve packing failures are assumed to be partial failures that result in SBLOCAs. Valve packing failures have limited capability to generate problematic debris because of the small orifice and choke flow conditions limiting flow passing around the valve stem, regardless of their location in containment, and have lower recirculation flow rate requirements than the LBLOCA test conditions. The combination of reduced debris transport and reduced head loss afforded by low recirculation flow rates eliminates sump performance failures for this event.

- The remaining non-piping LOCA locations (valve body-to-bonnet connections, bolted flange connections gaskets, primary manways, access ports, etc.) are bolted connections where an individual bolt failure would not result in a catastrophic failure of the entire cover. Such failures are assumed to result in SBLOCAs having limited capability to generate problematic debris, regardless of their location in containment, and lower recirculation flow rate requirements than the LBLOCA test conditions. The combination of reduced debris transport and reduced head loss afforded by low recirculation flow rates eliminates sump performance failures for this event.

LOCA – Water Hammer

Normal, upset (moderate frequency), emergency (infrequent), faulted (limiting fault), and testing conditions that could result in transient stresses (e.g., water hammer) have been considered in the design of the RCS, RCS component supports, and reactor internals, as described in FSAR 3.9(N).1.1, "Design Transients," [54] and in the design of other ASME Class 1 piping systems, as described in FSAR 3.9(B).1.1, "Design Transients" [55]. Therefore, the LOCAs that may be postulated to result from transient stress conditions are within the scope of the evaluations for piping and non-piping LOCAs that are described above.

Because water hammer has been considered in design of ASME Class 1 piping systems that form the RCS pressure boundary, NUREG-1829 [56] break frequencies applied in the risk-informed analysis include the likelihood of this LOCA initiator by virtue of the historical data examined in the study. Rare event occurrences of severe water hammer specifically excluded from the NUREG-1829 [56] frequencies do not contribute significant risk because these rare events generally have negligible frequencies relative to the nominal estimated LOCA frequencies.

Secondary Line Breaks – Outside Containment

Secondary line breaks outside containment do not contribute directly to containment sump debris loading and are screened from direct impact on containment sump availability. Secondary line breaks may result in failed-open pressurizer PORVs or pressurizer safety valves, RCP seal LOCAs, or the need to implement feed-and-bleed core cooling, which can require recirculation. Failed-open pressurizer PORVs or pressurizer safety valves, RCP seal LOCAs, and feed-and-bleed paths have been screened from further consideration because the combination of reduced debris transport

and reduced head loss afforded by low recirculation flow rates eliminates sump performance failures for these events.

Secondary Line Breaks – Inside Containment

Secondary line breaks inside containment have the potential to generate debris impacting containment sump performance. They can also result in failed open pressurizer safety valves, RCP seal LOCA or the need to implement feed-and-bleed core cooling, which can require recirculation. The analysis of these events is provided in Audit Item 35 below, demonstrating that weld breaks in the MSL and FWL cannot generate enough debris to fail the strainers given reduced transport and reduced head loss effects of lower recirculation flow rates in comparison to the LBLOCA strainer test conditions. MSL and FWL breaks that result in recirculation with no containment spray ranges from approximately 5% to 12% of the total flow rate tested for LBLOCA.

The combination of reduced debris transport and reduced head loss afforded by low recirculation flow rates eliminates sump performance failures for Secondary Line Breaks Inside Containment.

All Other Internal Initiators

All other internal events initiators do not result in RCS pipe failures, but they may result in non-piping LOCAs associated with RCP seal LOCA, failed-open pressurizer PORVs or pressurizer safety valves, or pressurizer PORVs being open to establish feed-and-bleed core cooling. The combination of reduced debris transport and reduced head loss afforded by low recirculation flow rates eliminates sump performance failures for these events.

Internal Flooding

Inside CTMT

Containment is designed for flooding impacts as part of the design basis LOCA analysis. Therefore, internal flooding PRA models do not quantitatively address flooding in containment. The high energy line breaks inside containment resulting in flooding are the subject of this application and are addressed as the main topic in this LAR. Non-high-energy flooding scenarios are screened based on mitigating design features, the fact that minimal thermal insulation debris is generated, and the need for recirculation being limited to non-piping LOCAs associated with RCP seal LOCA, failed-open pressurizer PORVs or pressurizer safety valves, or pressurizer PORVs being open to establish feed-and-bleed core cooling. The combination of reduced debris transport and reduced head loss afforded by low recirculation flow rates eliminates sump performance failures for Internal Flooding events inside containment.

Outside CTMT

Flooding events outside containment do not contribute directly to containment sump debris loading and are screened from direct impact on containment sump availability. Flooding events outside containment may also result in RCP seal LOCA or the need to implement feed-and-bleed core cooling, both of which can require recirculation. The combination of reduced debris transport and reduced head loss afforded by low recirculation flow rates eliminates sump performance failures for Internal Flooding events outside of containment.

Fire

All Fire Initiators

Fires do not result in consequential pipe failure LOCA. However, non-piping LOCAs associated with RCP seal LOCA, failed-open pressurizer PORVs, pressurizer safety valves or pressurizer PORVs being open to establish feed-and-bleed cooling can result from fire initiators. The combination of reduced debris transport and reduced head loss afforded by low recirculation flow rates eliminates sump performance failures for Fire Initiated events.

Seismic

Induced RCS Pipe Failures

There are several seismically-induced RCS pipe failures and all but one result in direct to core damage events that are already included in the Baseline CDF. For the seismic events that are assumed to result directly in core damage, the availability of the containment sumps is irrelevant and does not contribute to sump performance issues addressed in this LAR.

The remaining seismic RCS piping failure occurs on the pressurizer surge line. Breaks on this line were specifically analyzed by the method described in this application and shown not to impact containment sump performance (no pressurizer surge line welds appear in the critical weld list). Therefore, seismically-induced LOCAs do not contribute to the containment sump reliability issue addressed in this license amendment application.

All Other Induced Pipe Failures

All other PRA seismically-induced pipe failures (secondary pipe failures, non-seismic pipe failures, etc.) result in transients that are bounded by sequences that result in very small, small, or valve LOCAs, which do not generate enough debris to adversely impact the ECCS strainers during recirculation. The combination of reduced debris transport and reduced head loss afforded by low recirculation flow rates eliminates sump performance failures for these events.

All Other Seismic Sequences

All remaining seismic (non-piping failure) events result in seismic sequences bounded by internal events or fire sequences, i.e., RCP seal LOCA, failed-open pressurizer PORVs or pressurizer safety valves, or pressurizer PORVs being open to establish feed-and-bleed core cooling, which do not generate enough debris to adversely impact the ECCS strainers during recirculation. The combination of reduced debris transport and reduced head loss afforded by low recirculation flow rates eliminates sump performance failures for these events.

High Winds

High Wind-Induced Pipe Failures

High Winds induced pipe failures occur outside containment and are therefore similar to ISLOCA events, RCP seal LOCA, failed-open pressurizer PORVs or pressurizer safety

valves, or pressurizer PORVs being open to establish feed-and-bleed core cooling, which do not generate enough debris to adversely impact the ECCS strainers during recirculation. The combination of reduced debris transport and reduced head loss afforded by low recirculation flow rates eliminates sump performance failures for these events.

All Other High Winds Sequences

Non-pipe break sequences may result in RCP seal LOCA, failed-open pressurizer PORVs or pressurizer safety valves, or pressurizer PORVs being open to establish feed-and-bleed core cooling, which do not generate enough debris to adversely impact the ECCS strainers during recirculation. The combination of reduced debris transport and reduced head loss afforded by low recirculation flow rates eliminates sump performance failures for these events.

Other External Hazards

All Other External Hazards

In general, the entire Other External Hazard (OEH) category screens as insignificant regardless of containment sump performance. Most OEH events screen as being too far away to impact the plant site or are evaluated using a bounding analysis that includes direct to core damage assumptions not relying on containment sump performance. The remaining OEH events are bounded by modeled events that may result in RCP seal LOCA, failed-open pressurizer PORVs or pressurizer safety valves, or pressurizer PORVs being open to establish feed-and-bleed core cooling, which do not generate enough debris to adversely impact the ECCS strainers during recirculation. The combination of reduced debris transport and reduced head loss afforded by low recirculation flow rates eliminates sump performance failures for these events.

(35) Describe how the secondary line breaks (main steam and feedwater) that result in recirculation were evaluated in the PRA. The NRC staff understands that a conditional sump failure probability was computed using CASA Grande. This conditional probability was input into the PRA, and then delta core damage frequency (ΔCDF) contributions were calculated. Discuss whether CASA Grande was executed with breaks only on the main steam line and main feedwater lines (to compute the sump failure probability conditional on the line break and conditional on a break size). Provide the magnitudes of the conditional sump failure probabilities. Provide the source and basis for the initiating event (secondary line break) frequency used for the estimate of change in risk from such breaks. Discuss, which justification, whether different frequencies were used for different secondary line break sizes.

The licensee stated that they performed limited studies for the main steam (MS)/feedwater (FW) breaks using typical 17D ZOI and a smaller ZOI based on lower steam pressure (vs. RCS pressure). Some studies also considered a smaller ZOI based on flow restrictors in the steam lines. The results of the studies were used to quantify the amount of fiber that could reach the strainers for one and two train operation. The licensee stated that the MS line break frequency comes from the PRA and is not location based. Generic values were used for the MS/FW line break frequency and are based on the linear feet of pipe (ratio inside to outside containment). Double-ended guillotine breaks were assumed for all breaks. The licensee stated that the

increase in risk from these breaks is negligible (two orders of magnitude lower than the base risk). The licensee will discuss how these breaks screened out in a supplement. A statement that the breaks were screened out from consideration in the risk-informed analysis will be included.

Ameren Missouri Response:

The higher-level discussion of secondary contributors in the original LAR resulted in a LAR statement and audit discussions around the use of the PRA to perform sensitivity studies to substantiate the conclusion that risk contributions from MSL/FWL breaks are negligible. Based on the more detailed discussion of secondary risk contributors presented here and in the response to audit Question 34, these PRA sensitivities are no longer relevant and references to these sensitivities in Enclosure 3 "Response to 3.a.2" and Enclosure 3, Section 8.2 have been removed. The two arguments developed below to demonstrate negligible conditional strainer failure probability for MSL/FWL breaks are that: 1) low-flow recirculation required for MSL/FWL breaks allows a larger strainer load than tested LBLOCA flow conditions, and 2) weld-specific debris generation calculations for MSL/FWL breaks illustrate that the additional credit needed for two different ZOI conditions is well within the increased low-flow strainer load.

CASA Grande was run to calculate debris volumes generated and transported to the recirculation sump from double-ended guillotine breaks (DEGBs) on Main Steam Line (MSL) and Feedwater Line (FWL) welds. Eighty-two (82) welds are present on the MSL, and ninety (90) welds are present on the FWL. Evaluations were performed for two separate ZOI conditions including: Case 1 - internally restricted 16-in MSL diameter with a 10.4D fiber ZOI typically applied for BWR steam break conditions, and Case 2 - internally restricted 16-in MSL diameter with a 17D fiber ZOI typically applied for PWR RCS break conditions. Case 1 is considered the most representative condition for secondary line breaks because of the similarity in thermodynamic state point and because each steam generator implements a steam flow restrictor system consisting of seven venturi nozzles having a total flow-area-equivalent diameter of 16 inches. The flow restrictors do not impede steam flow under normal operating conditions but do prevent rapid SG depressurization should a steam-line break occur by reaching choke flow conditions in the venturi nozzles. No flow restrictions are present on the 14-in diameter FWL, but the same two ZOI sizes are examined to bound thermodynamic state point differences. During operation, the FWL contains condensed liquid (lower choke flow at a given break size) at lower temps and comparable pressures as the MSL side, so again, the Case 1 10.4D ZOI is considered most representative of FWL conditions. Case 2 is presented as an upper bound on debris generation potential.

Fiber debris transported from all break cases was compared to the single-train 300-lbm fiber test limit and conditional strainer failure probabilities were generated for MSL weld breaks, FWL weld breaks upstream of the check valve inside containment, and FWL weld breaks downstream of the check valve. Failure probabilities were estimated to equal the count ratio of breaks that exceed the LBLOCA test fiber limits divided by the number of welds in the subpopulation of interest. Table Q35.1 presents the range of conditional strainer failure probabilities generated for the single-train operating condition.

Table Q35.1. Single-Train Conditional Strainer Failure Probabilities for MSL/FWL Break Analysis.

Name	MSL Pipe Dia. (in)	ZOI Radius	No. of Failed MSL Welds	Conditional Probability (MSL)	No. of Failed MFL Welds Upst.	Conditional Probability (MFL Up)	No. of Failed MFL Welds Downst.	Conditional Probability (MFL Down)
Case 1	16	10.4D	30	0.37	0	0.00	0	0.00
Case 2	16	17D	43	0.52	24	0.52	15	0.34

Given that the 16-in internal flow restriction in the MSL is a design feature that protects all breaks regardless of location and that the MSL and FWL thermodynamic state points are significantly different than in the RCS, Case 1 is considered most representative of actual debris generation potential. For Case 1, no FWL DEGB breaks are found that exceed 300-lbm of transported fiber.

Significant conservatism is embedded in the comparison of secondary line breaks to the LBLOCA 300-lbm fiber test limit because strainer velocities used in the test are typical of maximum LBLOCA injection with containment spray (approximately 8,750 gpm). Recirculation conditions (not including containment spray) required for secondary line breaks (MSL and FWL) and other non-primary system initiated LOCAs require significantly less flows of approximately 480 gpm for feed-and-bleed, approximately 1000 gpm for failed open Pressurizer Safety valves, and approximately 660 gpm for the maximum postulated Reactor Coolant Pump Seal LOCA. The postulated bounding case for these events is the case of 3 pressurizer safety valves failed open which shows maximum single-sump flow rates of between approximately 878 gpm and 1,021 gpm without spray, and a maximum single-sump flow rate of approximately 4,186 gpm when sprays come on at about 5 hours into the event. All LOCAs (piping and non-piping) can result in containment spray actuation depending on size, operator actions and other factors, but the 3 pressurizer safety valves open case bounds the non-piping LOCA cases described above. Pressurizer Safety Valves discharge to the PRT, as described in the response to audit question 34.

Reduced flow improves recirculation strainer reliability in two ways. First, pool transport fractions will be lower; therefore, fewer break cases will transport more than the 300-lbm test limit, reducing estimated conditional strainer failure probability. Reduced transport fractions are difficult to quantify without generating spatial pool velocity maps, no-spray strainer velocities of only 12% of the LBLOCA test condition (1021 / 8,750 x 100 = 12%), 50% reductions in fiber transport are possible. The flow ratio for MSL/FWL breaks under feed-and-bleed recirculation would be only 6% of the test flow rate. Given that the largest amount of fiber debris transported in Case 2 (17D ZOI) is 525 lbm for MSL breaks and 400 lbm for FWL breaks, a transport reduction of (525 – 300)/525 x 100 = 43% would eliminate all strainer failures caused by secondary line breaks. In cases where containment spray is required, the flow reduction compared to test conditions would be (4186 / 8750) x 100 = 48%, or about one half of the test condition. Again, transport reductions could be significant.

Second, strainer head loss induced by the same debris bed will be less at the lower recirculation flow velocities, implying that more debris can be loaded on the strainer before exceeding NPSH and other strainer performance criteria. Figure Q35.1 presents the single-train conditional strainer failure probability caused by Case 1 DEGB MSL

breaks as a function of the strainer fiber load assumed as the new failure criterion to account for lower flow rate. An increase of 50 lbm from 300 lbm to 350 lbm would drop the conditional failure probability of occurrence from a secondary line break by a factor of 3 and an increase of 70 lbm from 300 lbm to 370 lbm (less than 25% increase above the LBLOCA debris loading NPSH limit) would eliminate all DEGB secondary line break induced low-flow recirculation failures for Case 1 break conditions.

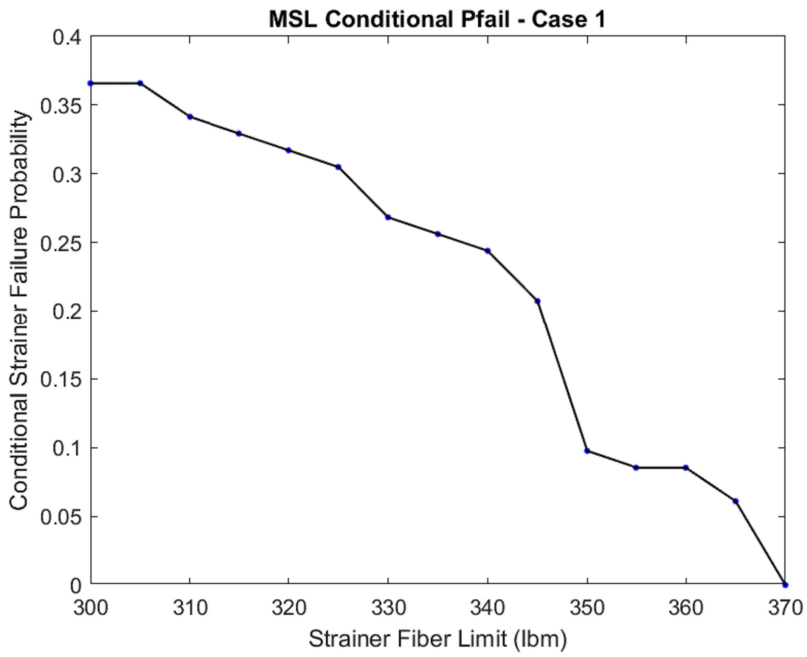

Figure Q35.1. Single-Train Conditional Strainer Failure Probability for Case 1 MSL Breaks with Increasing Fiber-Load Failure Criterion

Similar plots are shown in Figures Q35.2 and Q35.3 for MSL and FWL breaks, respectively, for Case 2 conditions having a 17D ZOI. Because more debris is generated and transported in Case 2, a larger increase in the strainer failure load limit is needed to eliminate all DEGB secondary line break induced low-flow recirculation failures. Elimination of all secondary-line break strainer failures under low-flow recirculation could be attained by increasing the allowable fiber limit by 225 lbm, or (525 – 300)/300 x 100 = 75%.

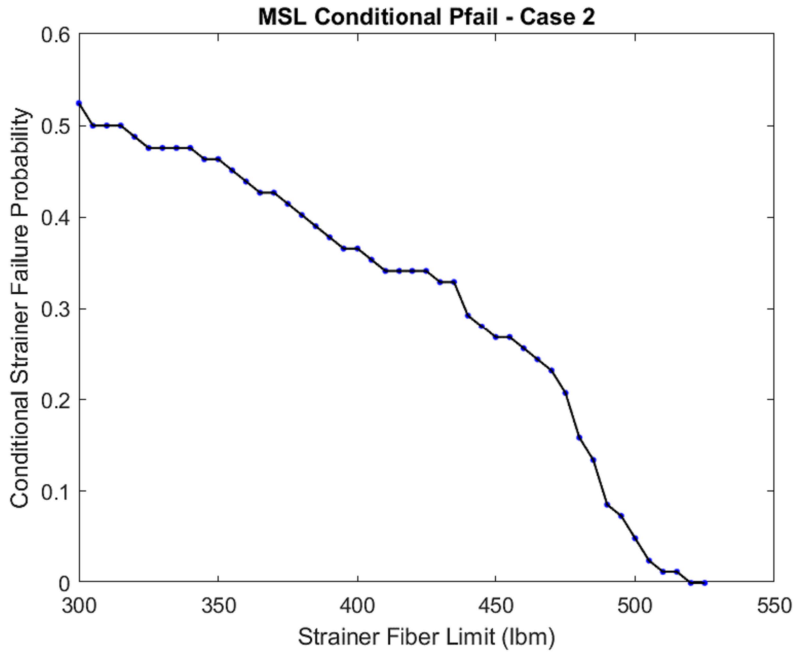

Figure Q35.2. Single-Train Conditional Strainer Failure Probability for Case 2 MSL Breaks with Increasing Fiber-Load Failure Criterion

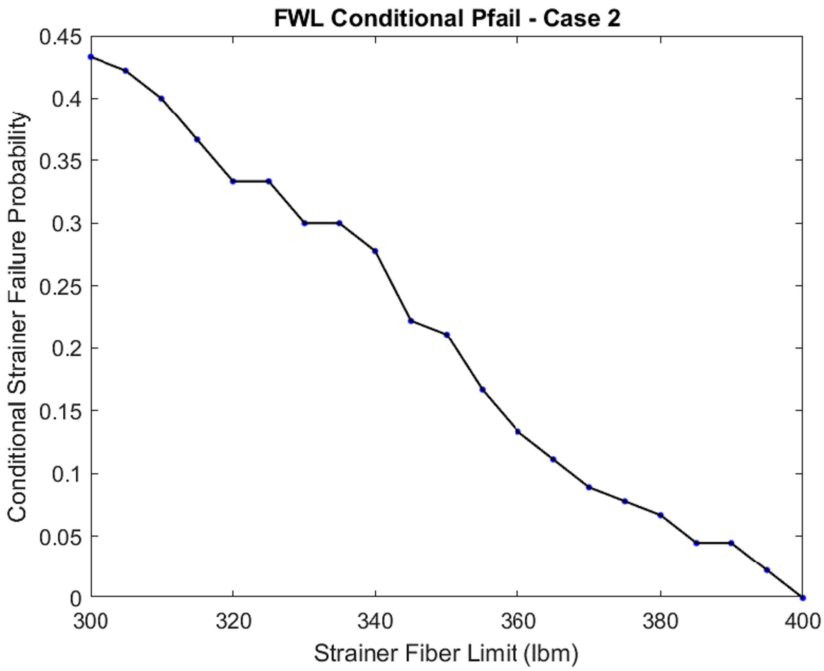

Figure Q35.3. Single-Train Conditional Strainer Failure Probability for Case 2 FWL Breaks with Increasing Fiber-Load Failure Criterion

The following argument illustrates the scale of additional debris that might be acceptable at a lower flow velocity, given that pool temperatures and debris composition do not change and bed compression can be ignored for this example. Assume that head loss

per unit of bed thickness is generically represented by a quadratic function of velocity such that

$$\Delta P/\Delta L = A'V + B'V^2 \qquad \text{Eq.(Q35.1)}$$

where

ΔP	= total debris-induced head loss,
ΔL	= debris bed thickness,
V	= strainer approach velocity, and
A', B'	= coefficients representing debris characteristics and water properties.

Because velocity equals volumetric flow rate divided by strainer area $(V = Q/A_S)$, Eq.(Q35.1) can be expressed in terms of volumetric flow rate using alternate coefficients A and B that subsume the strainer area and all unit conversion factors, yielding

$$\Delta P/\Delta L = AQ + BQ^2, \qquad \text{Eq.(Q35.2)}$$

If the lower recirculation flow rate of interest is a fraction of the higher recirculation rate such that $Q_{low} = fQ_{hi}$, then equal head loss between the two conditions occurs when

$$\Delta P_{hi} = \Delta P_{lo}$$

$$\Delta L_{low}\left(AQ_{low} + BQ_{low}^2\right) = \Delta L_{hi}\left(AQ_{hi} + BQ_{hi}^2\right)$$

$$\Delta L_{low}\left(fAQ_{hi} + Bf^2Q_{hi}^2\right) = \Delta L_{hi}\left(AQ_{hi} + BQ_{hi}^2\right)$$

$$\Delta L_{low}\left(fA + Bf^2Q_{hi}\right) = \Delta L_{hi}\left(A + BQ_{hi}\right)$$

$$\frac{\Delta L_{low}}{\Delta L_{hi}} = \frac{A + BQ_{hi}}{fA + Bf^2Q_{hi}}$$

Thickness (ΔL_{low}) times strainer area (A_s) times fiber density (ρ_f) approximates the fiber mass, so

$$\frac{M_{low}}{M_{hi}} = \frac{(\Delta L_{low})\rho_f A_s}{(\Delta L_{hi})\rho_f A_s} = \frac{A + BQ_{hi}}{f\left(A + fBQ_{hi}\right)}. \qquad \text{Eq.(Q35.3)}$$

Equation Q35.2 can be arranged in the form

$$\Delta P = (A\Delta L)Q + (B\Delta L)Q^2 = CQ + DQ^2 \qquad \text{Eq.(Q35.4)}$$

where $A = C/\Delta L$ and $B = D/\Delta L$. Substitution of these definitions in Eq.(Q35.3) confirms that the equal-head-loss mass ratio between two recirculation flow rates can also be expressed as

$$\frac{M_{low}}{M_{hi}} = \frac{(\Delta L_{low})\rho_f A_s}{(\Delta L_{hi})\rho_f A_s} = \frac{C + DQ_{hi}}{f\left(C + fDQ_{hi}\right)}. \qquad \text{Eq.(Q35.5)}$$

The coefficients C and D can be derived from velocity sweep test data on a single full-load debris bed where temperature is held constant. Test measurements are presented directly in the form of Eq.(Q35.4). The desired recirculation flow rates are known, so the ratio of debris masses that yield equivalent head loss can be evaluated. Note that the debris mass under lower flow conditions (M_{low}) is guaranteed to be larger than the mass at high flow conditions (M_{hi}) because $f < 1$.

Flow sweeps performed during full-load Callaway strainer testing [44] give the debris-bed pressure loss (total drop corrected for clean strainer effect) and scaled test flow rate for three operations scenarios of interest shown in Table Q35.2.

Table Q35.2. Head Loss Data from Callaway Full Debris Load Testing

Scenario	Debris Bed Pressure Loss (ft)	Scaled Test Flow Rate (gpm)
LBLOCA RHR Operation (4,800 gpm)	0.9	532
LBLOCA RHR and CS Operation (8,750 gpm)	3.5	1,102
SBLOCA Operation (1,500 gpm)	0.5	505

A least-squares fit to the test data using Eq.(Q35.4) yields a negative coefficient C for the linear flow rate contribution, which is nonphysical and indicates a dominant quadratic flow rate term. Dropping the linear term by setting $C = 0$ in Eq.(Q35.5) gives the simple result that

$$\frac{M_{low}}{M_{hi}} = \frac{1}{f^2}. \qquad \text{Eq.(Q35.6)}$$

Without the linear flow rate term in Eq.(Q35.4), the correlation to test data shown in Figure Q35.4 is obtained.

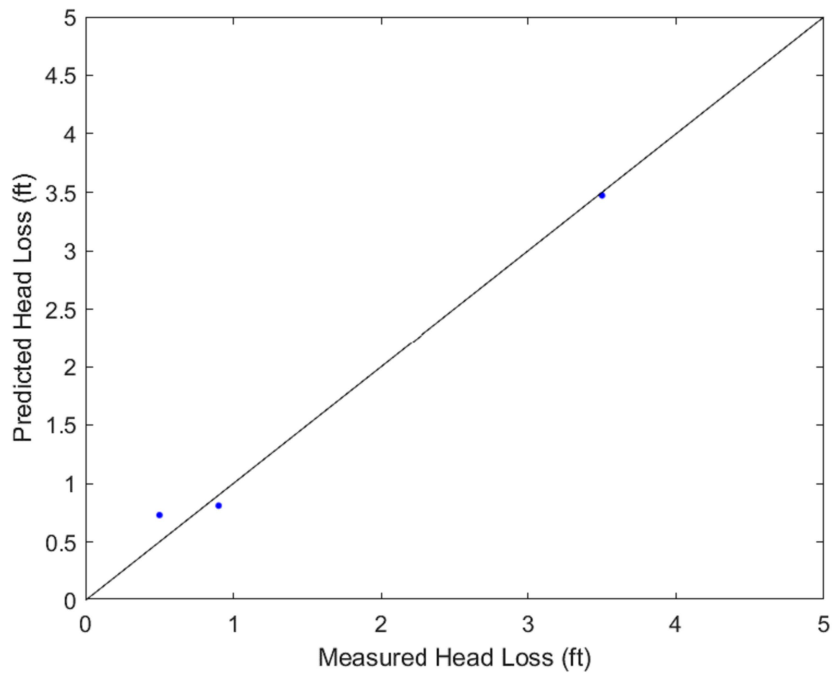

Figure Q35.4. Test Data Correlation to Eq.(Q34.4) with no Linear Flow Rate Contribution

Recirculation flow rates for secondary line breaks (pressurizer safety valve, feed-and-bleed, and RCP seal LOCAs) without spray are approximately 1/10th of the LBLOCA recirculation rate, indicating that the strainer could accommodate up to $1/(0.1)^2 = 100$ times more debris before reaching the same strainer performance limits established by the 300-lbm fiber RoverD risk threshold under LBLOCA flow rates. For recirculation under feed-and-bleed with no spray following a MSL or FWL break, the head loss reduction under low flow is even more significant. Despite acknowledged uncertainties related to debris bed compaction that are not treated in this scaling argument, reduced recirculation velocity will allow the bed to accommodate the extra 70 lbm of fiber (1.23 times tested limit << 100 times tested limit) needed to preclude secondary line-induced sump debris loading failure and reduce the secondary line break conditional failure probability for Case 1 to zero (see discussion preceding Figure Q35.1) with significant margin for uncertainties. The same argument bounds the 225 lbm fiber increase needed to eliminate strainer failures for Case 2 (17D ZOI). An increase of 1.75 times the tested limit is also << 100 times the tested limit.

The bounding case for non-pipe LOCA of 3 pressurizer safety valves failed open with containment spray has a flow ratio compared to test conditions of 4,186 / 8750 = 0.48 when sprays are running, indicating by Eq.Q35.6 an additional fiber debris capacity approximately 4 times higher than the test limit. Given uncertainties in the equal-head-loss debris-mass scaling argument, low recirculation flow is not the only rationale used to screen non-pipe LOCA events. The response to question 34 demonstrates that PRT discharge events also have limited debris generation potential.

The combination of reduced debris transport and reduced head loss afforded by low recirculation flow rates eliminates all strainer failure concerns for MSL and FWL break scenarios. The same reduced recirculation rate scaling arguments also apply to failed-open pressurizer PORVs or safeties, PORVs opened for feed-and-bleed cooling conditions following all other transient initiators, as well as RCP Seal LOCA, and Control

Rod Ejection scenarios that are handled as SBLOCA events with respect to their low-flow, late-stage recirculation requirements.

(36) Section 9.1 of LAR Enclosure 3 provides sensitivity studies for "alternative initiating frequency aggregation methods…" The sensitivity using arithmetic mean shown in Figure 9-2 indicates that the mean value for change in CDF exceeds Region III acceptance guidelines in Regulatory Guide (RG) 1.174, "An Approach for using Probabilistic Risk Assessment in Risk-Informed Decisions on Plant-Specific Changes to the Licensing Basis," [Rev. 2, May 2011(ADAMS Accession No. ML100910006)]. by non-trivial amounts. Section 9 of LAR Enclosure 3 states that "[a]rithmetic aggregation weights all elicited values equally, including outliers, and is explored for informational purposes." However, the NRC staff considers the use of the geometric mean as a key assumption, and consistent with guidance on risk-informed decision making, uses the results of sensitivities with alternative models to inform its decision. Therefore, the results of the sensitivity on initiating frequency aggregation are used by the NRC staff for more than "informational purposes." Justify how the proposed license amendment and exemption request are consistent with the risk-informed resolution of Generic Letter 2004-02 if sensitivities demonstrate that acceptance guidelines for Region III in RG 1.174 are exceeded. The justification can include demonstration of the impact of conservatisms in the approach to calculate the change in risk.

The licensee and NRC staff discussed this issue in a broader sense under item 38. Specifically, for this issue, the NRC staff noted that the arithmetic mean exceeds the Region III boundary by a significant amount. The NRC staff also noted that all plants using a risk-informed methodology for resolution of GL 2004-02 have performed sensitivities to address arithmetic mean values. The sensitivity studies allow the NRC to make informed decisions by adding to the understanding of how alternative models impact the estimated risk. The NRC staff stated that they are interested in mean values as discussed in RG 1.174, not the tails. The licensee and NRC staff discussed using the 50 lbm fiber margin that is included in each break scenario to address the arithmetic mean sensitivity result. The NRC staff cautioned counting margins twice but noted that the study of the fiber margin might provide a good perspective on how it impacts risk as long as the manner that the fiber margin will be used by the licensee is recognized. The licensee stated that the 50 lbm margin was chosen to prevent downstream effects scenarios from failing and to keep the arithmetic mean sensitivity risk below 5×10^{-6} per year. In general, sensitivity studies that indicate significant increases in risk should include discussions on available margin and available mitigation actions. It was also recognized that there is margin in the baseline risk value due to the assumption that only a single train operates when it is more likely to have two trains operating. The licensee will provide an evaluation of the arithmetic mean sensitivity in a supplement. The licensee should provide a basis for the conclusions that margins available indicate that risk remains very low (R-III) even though the sensitivity result is in Region-II.

<u>Ameren Missouri Response</u>:

The fundamental difference between interpretations of the geometric mean (GM) and arithmetic mean (AM) data aggregation methods is whether input from each expert in the NUREG-1829 [56] elicitation is intended to be combined in a single consensus distribution (an attribute of GM aggregation) or maintained as purely independent estimates that can

be applied alternatively with equal validity (an attribute of AM aggregation). The executive summary of NUREG-1829 [56] describes the final summary results of the elicitation process, which are based on the GM consensus approach, as being "… a reasonable representation of the expert panel's current state of knowledge regarding LOCA frequencies." NUREG-1829 [56] further states that the summary results were selected and reported after numerous "… sensitivity studies investigated the effect of distribution shape on the means as well as the effects of correlation structure, panelist overconfidence, panel diversity measure, and aggregation methods on the estimated parameters."

NUREG-1829 [56] states that the single largest sensitivity in the study is associated with the method used to aggregate individual estimates into a group estimate. The effect of elicitation aggregation methodology continues to be an important, if not dominant, factor driving total GSI-191 risk at Callaway. Initiating event frequency is an external input that, for the most part, cannot be controlled by plant actions. As described in the responses provided in this supplement for questions 39 and 40, Ameren Missouri has taken steps to monitor and mitigate the likelihood of a passive pipe-rupture LOCA, but the benefit of these actions is reserved as an unquantified margin rather than being applied as a formal reduction in the global LOCA frequency. While the frequency of a particular hazard like core damage is a fundamental component of risk quantification, comparative risk analysis, and final risk acceptance, large safety benefits accrue from the risk-informed GSI-191 study through systematic evaluation of debris-induced ECCS failure modes and the specific steps that Ameren Missouri can take to reduce the likelihood of ECCS failure. Ameren Missouri chose NUREG-1829 [56] GM break-size exceedance frequencies for use in the baseline plant risk analysis for the following reasons:

1) Numerous assurances are found in NUREG-1829 [56] confirming that the GM-based consensus summary results accurately reflect the intent of the study and the broad range of input provided by individual experts, and therefore, provide a reasonable basis for a plant-specific risk assessment.
2) NUREG-1829 [56] leaves the final choice of aggregation method to users who "… are in the best position to judge which study results are most appropriate to consider for their particular applications." Recent Callaway plant experience with seismic risk analysis confirms that consensus type aggregation methods of physical data, numeric simulations, and expert assessments have been developed, applied, and accepted by the NRC (NUREG-2117 [57]) to define initiating event frequencies for the phenomenology surrounding seismic return frequencies that have perhaps more complexity, uncertainty, and variability than the occurrence of passive pipe rupture. Callaway applied this experience by analogy in selection of the consensus GM LOCA frequencies for the Baseline risk assessment.
3) The Callaway PRA uses LOCA frequencies derived from prior distribution data reported in NUREG-1829 [56] Table 7.19 that is based on GM aggregation. It is important to maintain consistency across all aspects of the plant risk quantification so that risk-informed decisions can be made on an equal basis of comparison. To implement RG1.174 risk region assignments in a logical manner, both the absolute risk (x axis) and the change in risk (y axis) must implement the same basis for initiating event frequencies. If different bases are used for initiating event frequencies to quantify the risk coordinates, the implied consistency originally used to formulate the risk region definitions is broken and the interpretation will be skewed.
4) Callaway Baseline total risk results obtained for debris-induced core damage using GM-aggregated initiating event frequencies are commensurate with the comparative

risk expected from a well-managed hazard inherent to power plant operation. In other words, conservative, well-established methods for debris generation and transport, combined with large well-designed and well-maintained strainers lead to Very Low Risk as defined by Regulatory Guide 1.174 [8] Risk Region III. No additional safety benefit can be gained by adopting higher initiating event frequencies, beyond the cautious perspective offered by comparing elicitation aggregation methodologies (alternative models), because Ameren Missouri has implemented containment configuration controls needed to prevent growth in debris source terms, educated operators and plant engineers about potential debris-induced ECCS complications, and implemented industry standard piping and weld inspection/mitigation programs to reduce LOCA failure modes that are within plant control. Risk results obtained using AM aggregated initiating event frequencies are presented in the LAR as sensitivity cases illustrating the potential effect of a change in analysis methodology, but there are no additional actions that Ameren Missouri can take to directly reduce LOCA initiating event frequencies.

The supplement response to audit Item 38 illustrates that the 50-lbm operational fiber margin added to every break scenario in the Baseline analysis introduces a factor of two increase in calculated risk when using GM average break frequencies. The effect of the 50-lbm operational margin is demonstrated with respect to a detailed understanding of the full fiber debris risk spectrum. While the shape of the AM exceedance frequency function defined in NUREG-1829 [56] differs somewhat from the GM exceedance frequency function, a similar magnitude of risk increase is being introduced to the AM sensitivity case. The 50-lbm operational margin is not intended to represent uncertainty or arbitrary conservatism (safety margin) in the amount of transported fiber debris. The 50-lbm operational margin establishes a quantifiable “guardrail” that helps the plant understand somewhat abstract risk concepts in a meaningful physical context. For example, 50-lbm of fiber (about 21 ft^3 of Nukon insulation) is more than a canvas tool bag inadvertently left in containment.

The risk benefit of many safety margin assumptions cannot be easily quantified, so qualitative arguments are used. By comparison, the risk increase introduced by the 50-lbm operational margin is explicit and provides a useful scale of comparison for judging the importance of other uncertainties that affect debris generation and transport. Callaway will maintain the current plant configuration unless dispositioned in an engineering change package as allowed under 10 CFR 50.59 and will not intentionally encroach on the 50-lbm operational margin by adding detrimental materials to containment. This margin is introduced to the Baseline risk assessment because of its utility for plant risk management and education. It does not represent a current, imminent, or future cause for actual increased risk to the level reported in the AM frequency sensitivity case.

RG 1.174 Principle 3 requires a discussion of safety margins introduced to the risk assessment. In the Callaway LAR, core damage and large early release are the two adverse consequences used to assess risk in combination with their low occurrence frequency. The practical interpretation of “safety margin” used to identify Callaway safety margins is:

<u>Safety Margin</u> - analysis assumptions and test parameters applied to ensure that accident scenarios analyzed to be successful (no exceedance of ECCS performance criteria) would be unquestionably successful in a real accident scenario. Normal regulatory guidance cannot be cited as safety margin because perceived or inherent conservatisms are reserved for uncertainty assessed at the time guidance was issued. Therefore, only conservatisms exceeding normal regulatory requirements and practice qualify as safety margins that tend to increase calculated risk.

The following list itemizes select safety margins that are known to be present in the Callaway Baseline risk assessment. By nature, the risk benefit of some margins is difficult or expensive to quantify; otherwise, they may have been included as Baseline assumptions. The order of presentation does not indicate any assessment of relative merit or magnitude, and the list does not represent a complete tabulation of all safety margins inherent to the Baseline analysis.

1. Standard NUREG-1829 LOCA frequencies are applied as the principal driver for RoverD risk quantification. Quantitative credits have not been applied to account for proactive plant actions that have been taken to reduce weld break potential by performing weld overlays, weld replacements, and water peening to reduce local stress. While it is recognized that NUREG-1829 break frequencies assume a consistent standard of inspection and plant maintenance, recent improvements (e.g., water-jet peening, Alloy 600 management program) are judged to exceed the normal standard of care, reducing the likelihood that Callaway will experience a passive weld-break LOCA compared to the frequencies applied in the analysis.

2. The single highest transport factor identified from several alternate break flow and strainer flow configurations is applied to all break scenarios, regardless of actual break size or location. The methodology would allow refinement of transport factors to specific SG compartments, if supported by location-specific transport calculations that generate smaller transport factors than the bounding case.

3. Single-train operation is assumed for all strainer performance evaluations (maximum strainer debris load). Dual-train operation is assumed for all in-vessel performance evaluations (maximum fiber penetration and in-vessel accumulation). Risk-informed GSI-191 precedent calculations apply relative pump-state frequencies as weighting factors to calculate total incremental risk of core damage. Two-train operation, as designed, is the more likely plant response to a LOCA, which increases acceptable debris transport from the tested fiber limit of 300 lbm up to 600 lbm (shared between two identical strainers) from the perspective of strainer performance. LOCA events capable of generating and transporting more than 600 lbm of fiber have smaller frequencies and would contribute much less incremental risk of core damage. Conversely, applying a weighting factor for failure of one ECCS recirculation train would reduce the risk of core damage caused by debris accumulated in the core during two-train operation. However, no core damage events caused by downstream debris effects are currently identified. In the present Baseline analysis, scenarios identified to exceed either strainer performance or in-vessel performance requirements contribute equally to ΔCDF.

4. The baseline risk assessment assumes immediate core damage with no opportunity for recovery if any single strainer or in-vessel performance criterion is violated. This assumption is equivalent to saying that if any fiber exceeding 300 lbm arrives at the strainer, or if a steam bubble forms at the top of the strainer, then all ECCS flow immediately drops to zero. Although Callaway does not have pump-specific test data, all industrial pumps can operate with a small amount of evolved air or steam bubble ingestion. In the interval between exceeding the 300-lbm RoverD strainer load and cavitation-induced pump failure, significant cooling flow would continue to be delivered to the core.

5. Examination of in-vessel fiber accumulation assumes 100% retention of fiber arriving at the core inlet, or in the heated core volume. This assumption accelerates total accumulation for early identification of challenges relative to the falling decay heat

source term. Some fraction of fiber arriving at or in the core almost certainly passes through the core and either returns to the sump pool with break flow or is permanently sequestered elsewhere inside the primary system piping. These effects delay or prevent possible exceedance of in-vessel debris limits, allowing early decay-heat reductions before any concerns arise. Similarly, no credit is taken for internal fiber transport times occurring between the moment of strainer penetration and the moment of reintroduction to the recirculation pool through either spray or break flow pathways. Recirculation equations analytically force instantaneous return of penetrated fiber back to the pool where it is instantly homogenized and made available to the sump strainers with no migration delay.

6. No significant debris-induced risk from ECCS strainer failure or core blockage is added by SBLOCA. This statement is also substantiated by testing to prove that one strainer can successful handle much larger debris loads than can be generated and transported by SBLOCA. However, SBLOCA sump configurations were analyzed and compared to thin-bed debris load tests performed with LBLOCA flow rates to ensure successful SBLOCA strainer performance. Also, RWST technical specifications were changed to permit more injection from storage and achieve strainer submergence prior to sump swap for SBLOCA conditions.

7. Sump strainer performance evaluations and tests assume an error of minus 3 inches of water in the reading of the normal sump level indicator. Despite this penalty, the strainers pass all hydraulic performance metrics. The small containment overpressure credit applied to suppress boiling at the top of the strainer assembly is not needed at the nominal pool depth defined by technical specifications.

8. Sump strainer performance evaluations apply head loss measurements obtained at approximately 120 °F without scaling sump pool water properties to the higher temperatures expected during accident response. Tested debris head loss was not scaled to higher plant temperatures for any of the analyzed cases.

9. Head loss obtained in the thin-bed strainer test was applied as a bounding condition on SBLOCA recirculation conditions. The thin-bed test velocity is three times higher than would be needed to supply the ECCS without containment spray during recirculation for a SBLOCA.

10. For NPSH calculations bubble collapse and re-absorption of gasses were not credited, so maximum voiding is assumed in all NPSH cases.

11. No credit was applied for LBLOCA reduced or terminated spray flow rates as directed by EOP. In general, reduced flow rate through the recirculation strainers reduces head loss induced by a given debris bed and reduces total debris transport. Reduced or terminated containment spray also increases sump water level as spray water returns to the pool and is no longer removed at the same rate. None of these benefits are quantified or credited in the Baseline risk analysis.

12. Despite WCAP-17788 test evidence showing that Callaway containment conditions have no proclivity for chemical product formation during the first critical hours of LOCA response, strainer testing was performed at maximum strainer flow rates using surrogate chemical product loads approaching the maximum deterministic loads identified from all postulated breaks that were analyzed. If the tested chemical loads were experienced during a 30-day mission time, it is likely that containment sprays would not be running and actual head loss would be much less than the test condition.

13. When quantifying the risk contribution of isolable weld breaks, the entire NUREG/CR-1829 LOCA frequency was duplicated and assigned to a smaller weld population with a smaller total piping length.

14. A common industry valve failure probability (1.11E-03) typical of automatic on-demand valve closure was assigned to all first isolation valves that protect isolable weld breaks, regardless of whether the valves are normally closed during operation. More detailed assignment of valve-specific failure rates by failure mode could credit the difference between passive failures in normally closed isolation valves and active failures in rapidly actuated isolation valves. See sensitivity results discussed in the response to question 31 in this enclosure.

15. Approximately 350 lbm of NUKON fiberglass was introduced to the Callaway CAD model and subsequently used for debris generation before it was discovered that these specific pipes are presently insulated with FOAMGLAS®. FOAMGLAS® was scheduled for complete removal during the steam generator replacement project in 2005, but this remaining material was discovered during a plant walkdown in 2019. The effects of the actual FOAMGLAS® insulation on tested particulate margin are assessed separately in the response to question 10 in this enclosure.

16. Strainer head loss testing was performed at elevated flow rates 15% higher for LBLOCA design conditions and 300% higher for SBLOCA conditions. Higher velocity induces higher headloss in a given debris bed through direct hydraulic effects and through secondary bed compaction effects.

(37) On page 140 of LAR Enclosure 3, the submittal states "[t]he Bounded Johnson distributions are used to create the blue dots in Figure 7-1 and are supplemental information." On page 141 and 151 of LAR Enclosure 3, it appears that it is used to calculate the ΔCDF for use in this application. Clarify whether or not the Bounded Johnson distribution is used to calculate the ΔCDF.

The licensee stated that the Bounded Johnson values were used only for illustration purposes to show the curve between the points taken from NUREG-1829, "Estimating Loss-of-Coolant Accident (LOCA) Frequencies through the Elicitation Process." The Bounded Johnson values were used simply to help with visualization and were not used for any calculations.

<u>Ameren Missouri Response</u>:

Ameren Missouri concurs; no further response is needed.

(38) Based on the information provided in Section 9 of LAR Enclosure 3, the uncertainty in the LOCA initiating frequencies appears to be the only parametric uncertainty investigated by the licensee. However, uncertainty exists in the other input parameters used to calculate the conditional strainer failure probability. Therefore, please provide the following:

a. A sensitivity analysis to identify which inputs have the greatest impact on the risk quantification results. Include the process of identifying input variables to evaluate, selecting the minimum and maximum value for each variable, and quantify the risk in terms of delta CDF.
b. A parametric sensitivity analysis that biases the inputs to the most conservative values, if not already biased in the base case.

The licensee concluded that the guidance (models and methods used) contains adequate margin so that the evaluation of uncertainties is not required. The NRC staff stated that STP and Vogtle Electric Generating Plant (Vogtle) both performed parametric studies on several parameters to ensure that they understood which parameters could significantly impact risk. Identification of parameters that can have a significant effect allows them to be inspected to ensure that the values used were adequately estimated. The NRC staff stated that the licensee should provide a summary of why the results are conservative. For example, why is it certain that there is no risk contribution from debris in the reactor vessel? Explore parameters that affect the result and how sensitive the analysis is to these parameters. Concentrate on parameters that strongly drive the risk result. Provide assurance that the parameters have been treated acceptably. Parametric sensitivities should be discussed along with the limiting factors and the basis for why they have been addressed adequately. The discussion should be qualitative with quantitative results for support. Alternately, if all parameters are shown to be biased conservatively, it is possible that no sensitivities would be required. The sensitivities are done to identify which parameters are important and as additional insight to the conclusion that Callaway operates in RG 1.174 Region-III. The licensee will consider an acceptable method of addressing this issue and provide information in a supplement.

Ameren Missouri Response:

The RoverD methodology originated with the STP pilot project as a practical compromise between the deterministic mandate to prove ECCS performance for the worst combination of accident conditions and a formal rigorous uncertainty propagation for numerous phenomenology and system response parameters across their full physical ranges. The essence of the methodology is that 1) existing deterministic guidance must be followed for all debris phenomenology, sump performance analyses, and strainer testing protocols; and 2) risk contributed by analyzed scenarios exceeding tested strainer loads must be quantified and examined in a manner that satisfies the elements of risk-informed decision making outlined in Regulatory Guide 1.174 [8]. The RoverD methodology establishes a significant level of simplicity that streamlines both the calculation and review of the residual risk quantification.

Ameren Missouri implemented the RoverD methodology in a very literal manner by first performing analyses and strainer testing that meet all requirements for deterministic GSI-191 resolution, except for the maximum identified fiber load. Parameter values and analysis methods that exceed regulatory guidance, in either a higher or lower conservative direction, are identified as safety margin in other sections of the LAR, but the guiding principle followed by Ameren Missouri is that every aspect of analysis and testing is sufficient to satisfy regulatory requirements for deterministic closure, up to the tested capacity of the strainer for handling mixed composition debris beds, including chemical products. Hypothetically, if the strainer area were increased to accommodate the maximum identified debris loads, then no other aspect of the analysis would require reexamination to resolve GSI-191 deterministically.

Under conventional deterministic analyses, regulatory guidance for specific parameters and methods is understood to encompass uncertainties that were present in the knowledge base at the time that guidance was issued. By extension, it is understood that standard guidance introduces reasonable conservatisms to avoid underestimating the severity of the accident conditions or overestimating the capacity of safety systems to respond to those conditions. In the risk-informed portion of the RoverD approach, RG 1.174 requires a discussion of analytic safety margins that must exceed standard guidance to qualify as margin.

These constraints, which meet at the interface between deterministic strainer performance standards and risk that is quantified beyond, or over and above, the deterministic standards, creates a contradiction in the selection of meaningful parameter ranges for use in sensitivity studies. All parameters, like ZOI size, debris transport, operator response times, etc. have legitimate low and high values that are related by variability and uncertainties in physical processes that are generally not characterized in sufficient detail to define full probability distributions across their ranges, so many sensitivity studies resort to combinatoric examinations of the arithmetic effects introduced by parameter value extremes. However, if a reasonable low/high parameter value is proposed that contradicts deterministic guidance, then the proposed value invalidates acceptability of the deterministic analyses that support the Callaway LAR. Similarly, parameter values that contradict guidance in either a low or high direction are not useful as safety margin for addressing the required elements of Regulatory Guide 1.174 [8].

A related contradiction appears when attempting to select upper bounds on various parameters. Because Ameren Missouri faithfully implements deterministic guidance, with appropriate safety margins identified when engineering judgements are required, any selection of even more conservative low/high values quickly becomes arbitrary and does not lead to legitimate risk insights that can be diagnosed and managed through plant-specific mitigation strategies. If the aggregate of all Callaway parameter values, including identified safety margins, is considered as the analyzed upper bound to the risk assessment, then safety margins can be relaxed or removed until the analysis is consistent with all available and permissible guidance before violating deterministic acceptability. However, many margins are adopted for analytic simplicity and the quantitative degree of conservatism for individual assumptions is often difficult to quantify.

Rather than exploring the interactions of somewhat arbitrary parameter ranges, Ameren Missouri presents the following discussion to demonstrate overall stability of the quantified RoverD risk with respect to the 300-lbm fiber test limit. This discussion is limited to analysis of nonisolable weld-break LOCA and defers discussion of secondary risk contributors, including in-vessel fiber, to other LAR sections.

At a high level, an examination of calculated risk stability can by approached by analogy to a multifactor derivative. RoverD risk is calculated by combining three pieces of information: 1) LOCA initiating event frequencies from NUREG-1829 [56], 2) strainer fiber capacity determined by testing, and 3) fiber debris generated and transported by each LOCA analyzed. Because LOCA frequencies and tested strainer capacity are mutually independent, there are no cross-product interaction terms between these factors. Similarly, the amount of fiber debris does not affect LOCA frequencies, so the sensitivity of residual risk to selection of LOCA frequencies is examined as an independent factor in the LAR through several sensitivity studies, including Arithmetic Mean and Geometric Mean expert aggregation, in combination with 25-yr and 40-yr operations history, and DEGB and continuum weld rupture models. These sensitivity cases are discussed more completely in the response to Item 36 provided in this supplement. Note that the direct relationship

between LOCA frequency, break size, and debris quantity is explicitly captured in the CASA Grande debris generation methodology.

The Callaway tested strainer fiber capacity of 300 lbm is the second independent factor affecting stability of the risk quantification because it defines the assumed limit of strainer performance against which debris transported by each analyzed break scenario is compared. The goal of full debris load testing is to maximize the verified strainer fiber capacity by adding as much debris as possible before measured head loss exceeds available NPSH (and other strainer performance metrics). Industry experience with strainer testing and use of test procedures designed to meet deterministic acceptance criteria that compensate for testing uncertainties, ensure that strainer performance tests are repeatable to within approximately a 1/8-inch thick equivalent fiber load, assuming a manufactured density of 2.4 lbm/ft^3. Each Callaway strainer has a total area of 3311.5 ft^2, so the 1/8-inch equivalent load is equal to approximately 34.5 ft^3, or 14.4 lbm. This variation is less than 5% of the tested 300-lbm fiber load and implies that repeated tests could successfully approach NPSH limits using no less than 285 lbm of fiber.

There are many likely reasons that Callaway strainers can each tolerate more than 300 lbm of prototypical transported fiber, not the least of which is the disruptive presence of RMI debris shards that were not included in testing, but the intent of deterministic testing protocols is to verify that the strainers can handle no less than the tested load. While deterministic test acceptance standards were developed to verify maximum identified debris loads, the process compensates for the relatively small 5% variation in test repeatability, and is equally applicable to all intermediate test loads. Given these considerations, the 300-lbm test load is considered to be a fixed constant value in the following discussion.

Residual risk not bounded by testing is quantified by adding the break-specific frequency of all recirculation scenarios that are capable of transporting more fiber than the test-verified strainer capacity. Thus, the 300-lbm fiber limit marks the RoverD transition against which all analyzed break scenarios are compared. Ameren Missouri implements all applicable guidance for calculating debris generation and transport loads that would be required to perform a bounding deterministic strainer test, and applies the guidance consistently for every postulated break, regardless of size. Additional safety margins are included in many of the accident analysis factors to ensure bounding strainer loads for each postulated break, as if each break calculation defines the test load needed to perform a strainer response verification test.

With the deterministic philosophy in mind, Figure Q38.1 presents the variation in risk posed by DEGB breaks at all nonisolable weld locations. The y axis presents the RoverD risk introduced by all breaks transporting more than the corresponding x-axis fiber quantity. Exceedance frequencies reported on the y axis are based on 25-yr Geometric Mean aggregation break frequencies, consistent with the Baseline evaluation. Fiber transport values for each DEGB do not include the 50-lbm operational fiber margin that will be discussed below. Figure Q38.1 encompasses the full range of debris transport for all nonisolable DEGB and reveals a plant-specific gap in the Callaway fiber transport spectrum between DEGB LOCA that transport approximately 380 lbm of fiber and events that transport approximately 750 lbm of fiber. The observed gap is a result of the relative placement between large pipe welds and fiber insulation in the Callaway containment building, and it indicates that almost no risk reduction would be gained, even if the fiber capacity of the Callaway strainers were doubled. Figure Q38.1 illustrates that at the 300-lbm fiber test limit, shown as the red dashed line, Callaway strainers are properly sized

and test validated to meet deterministic performance criteria for all but the largest, lowest likelihood, LOCA events.

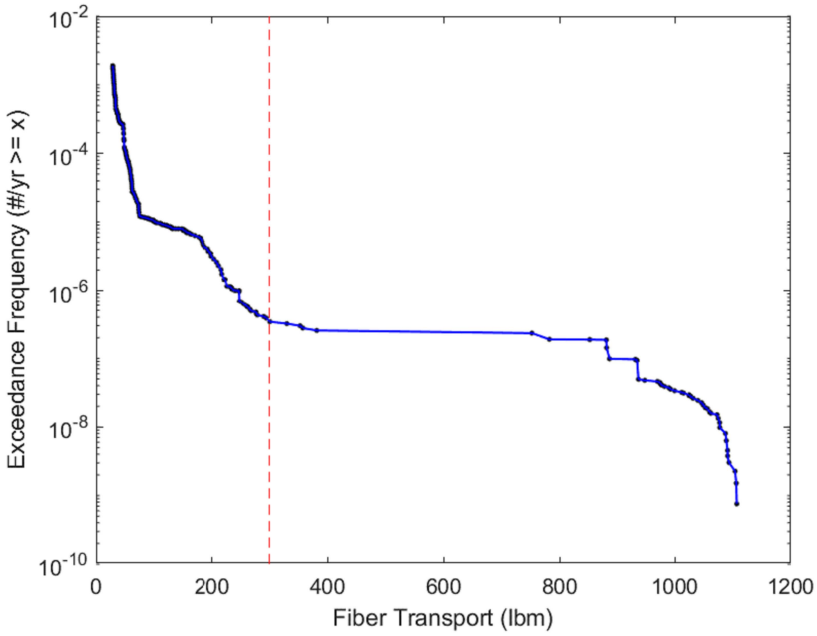

Figure Q38.1. Risk Variation from DEGB in Nonisolable Welds (No Operational Fiber Margin Added).

Figure Q38.2 examines the effect of adding 50 lbm of operational fiber margin to the Callaway Baseline analysis. Because every analyzed break is now assumed to transport more fiber, the entire debris spectrum shifts to the right with respect to the 300-lbm test limit by exactly 50 lbm. Note that the upper panel of Figure Q38.2 is just a closeup view of Figure Q38.1 over a more narrow fiber range before the margin is added, and the lower panel shows the result of the 50-lbm shift. The y-axis cumulative risk increases by approximately a factor of 2 when the 50-lbm margin is included. Adoption of a larger operational margin would incur a relatively large step change in risk (lower panel) that appears in the blue debris transport spectrum just to the left of the red-dash test limit.

Implementation of the 50-lbm operational margin in the Baseline risk quantification explicitly protects Callaway from experiencing a rapid risk increase caused by unexpected sensitivities in the risk profile to uncertainties in analysis parameters. Ameren Missouri has no intention of changing the plant configuration in any way that encroaches on the 50-lbm operational fiber margin, so with proper procedures, the margin provides a guardrail for immediately assessing the potential risk impact of an inadvertent condition, such as a canvas tool bag, or other small fiber source, left in containment following an outage. For added context, 50 lbm of fiber equals approximately 21 ft^3 of Nukon insulation, which is a nontrivial quantity that would not escape outage walkdown inspections. Ameren Missouri also understands the importance of controlling all other debris types that establish the tested strainer capacity, including failed coatings, latent debris, and potential chemical products. The 300-lbm fiber test limit represents the aggregate effect of all debris quantities that were introduced to the deterministic test procedures.

Numerous safety margins (assumptions built into the analysis that elevate quantified risk and protect from underestimating the severity of the issue) are already inherent to the debris spectrum presented in Figures Q38.1 and Q31.2, but the numerical benefits of these margins are difficult to quantify, and they can affect different break scenarios in

different ways, which changes the shape of the debris spectrum. The 50-lbm operational margin introduces an explicit additive shift of the entire debris spectrum, and the risk impact is easily quantified and examined. If introduced in the same context as other safety margins, the extra 50 lbm would be arbitrary and ineffective at revealing risk insights and sensitivities. However, given Ameren Missouri's understanding of the complete risk profile and the quantitative effect that changes in fiber debris can have on residual risk beyond the deterministic test limit, the 50-lbm margin defines an explicit factor of 2 in potential risk impact that bounds the effects of other parameter variations that are unlikely to lead to variations as large as 50 lbm in transported fiber source terms.

While the risk spectrum results are presented here using DEGB fiber loads, the same trends are evident in continuum break model results that were generated to select the magnitude of the operational fiber margin by repeating the risk quantification in a manner consistent with every other assumption present in the Baseline.

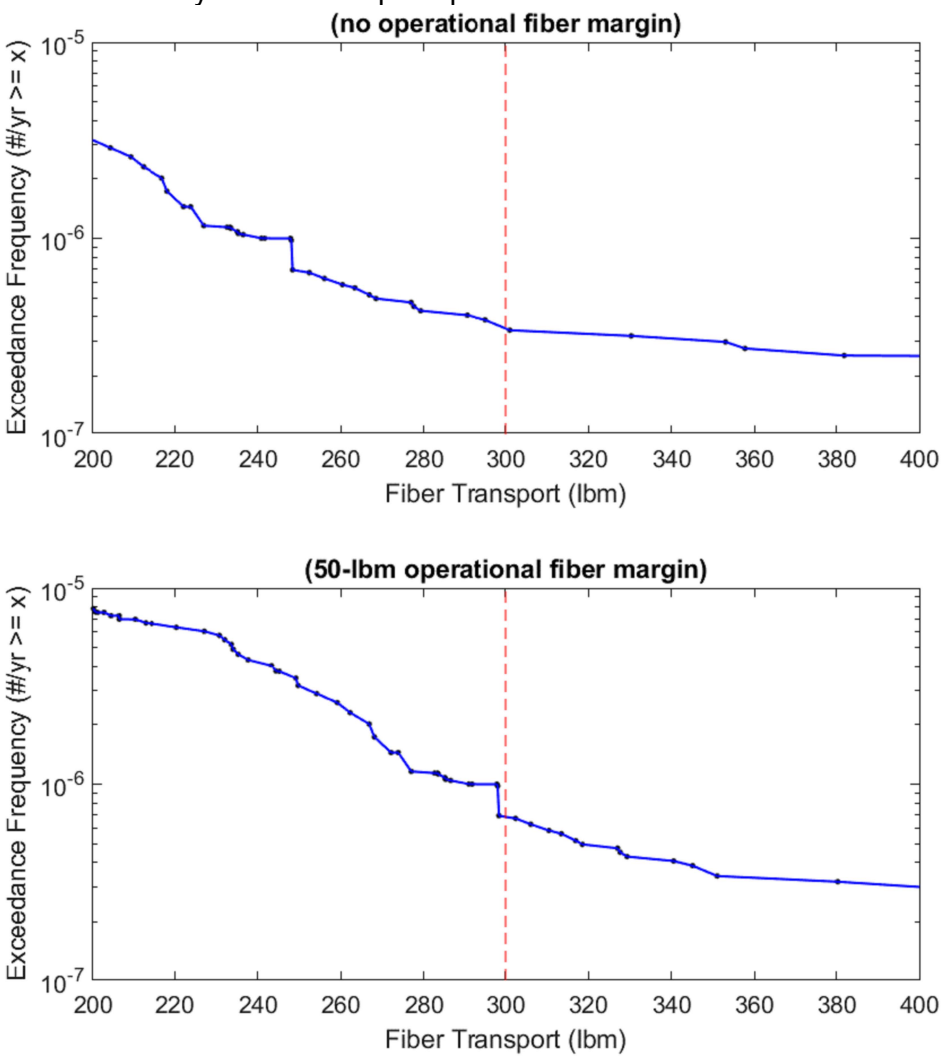

Figure Q38.2. Effect of 50-lbm Operational Fiber Margin.

Traditional sensitivity cases that Ameren Missouri performed to examine potential and principal risk drivers and to confirm engineering judgements include but are not limited to:

1. Initiating event frequency:
   a. Arithmetic Mean aggregation
      i. 25-year plant operation

ii. 40-year plant operation

b. Geometric Mean aggregation

i. 25-year plant operation

ii. 40-year plant operation

2. DEGB vs continuum break model (Section 10 of ALION-REP-CEC-9143-021 [58])
3. 50-lbm fiber margin – generated continuum Baseline risk for several levels of operational fiber margin to select 50-lbm as final quantity
4. Valve-body insulation – examined rules of thumb implemented for STP pilot project to generically add valve-specific insulation to judge applicability for Callaway. Adopted STP approach.
5. Transport methodology for small fiber (ALION-CAL-CEC-9143-017 [59])

Strict application of the standard transport methodology assumes debris transport to the strainer for all recirculation pool zones that exceed either the floor-level tumbling velocity or the local turbulent kinetic energy associated with a particular debris type and size. In many of the seven CFD cases run for Callaway to examine small fiber transport, zones subject to transport were co-mingled and intertwined on a small scale with regions of lower velocity and/or lower turbulence. Fractional areas subject to transport were qualitatively reevaluated with the added provision that quiet zones co-mingled with transport zones would also transport debris to the strainer. This provision was applied separately to transport fractions in the annulus and in the steam generator compartments. In all flow calculations, the increase in transport from the annulus (area outside the bioshield inside Containment) was less than 3% and the increase in transport from steam generator compartments (inside the bioshield) was between 5% and 9%. Ultimately, transport fractions for small fiber debris were assigned to 100%, resulting in conservatisms of up to 30%. The sensitivity case demonstrated that traditional evaluation methods applied to different debris types and sizes are stable with respect to uncertainties in the fine resolution results of CFD calculations.

Resolution of the NRC question pertinent to possible nonzero risk of core damage caused by debris in the reactor core will be discussed the response to Item 23, which is being deferred to the RAI process and timeline.

Defense In Depth and Safety Margin

(39) Enclosure 3, Attachment 3-4, Section 2.5.2.2, “Reactor Coolant System Weld Mitigation,” states that “All large bore reactor vessel welds susceptible to [primary] water stress corrosion cracking (PWSCC) have been mitigated by water jet peening in 2017.” The NRC staff noted that nickel-based Alloy 600/82/182 components and welds are susceptible to PWSCC. Besides large bore pipe welds, some pressurized water reactor plants have Alloy 600/82/182 material in various pressurizer nozzle welds, reactor vessel closure head penetration nozzles and associated attachment welds, welds for the nozzles attached to the reactor vessel, pressurizer, and steam generator. Besides the welds in the large bore RCS piping that are susceptible to PWSCC, identify Alloy 600/82/182 dissimilar metal butt welds and components in the RCS pressure boundary that have not been mitigated to minimize PWSCC. Discuss whether the non-mitigated Alloy 600/82/182 weld and component locations were analyzed for the debris generation with a higher probability than for the mitigated welds and components. If not, provide justification.

The licensee stated that they used break frequencies in NRC NUREG-1829 that did not include special treatment of dissimilar metal welds. The licensee further stated that the plant has a program to inspect, evaluate, and mitigate the dissimilar metal welds. Special treatment of the dissimilar metal welds in the CASA Grande analyses would be considered a bottom up approach, which was abandoned by STP, the pilot risk-informed plant. The licensee indicated that NUREG-1829 has some recommendations for treatment of dissimilar metal welds.

However, the licensee did not use the uneven frequency weld break recommendations in the analysis. Based on discussions during the audit, the licensee stated that it will provide a description of its dissimilar metal weld inspection and evaluation program and believes that American Society of Mechanical Engineers Code Case N-770-5, “Alternative Examination Requirements and Acceptance Standards for Class 1 PWR Piping and Vessel Nozzle Butt Welds Fabricated with UNS N06082 or UNS W86182 Weld Filler Material With or Without Application of Listed Mitigation Activities, Section XI, Division 1,” as conditioned by 10 CFR 50.55a(g)(6)(ii)(F) must be use for the inspection of dissimilar metal welds. The licensee stated that it will discuss the inspection, evaluation, and mitigation of these welds in a supplement. In addition, the licensee will identify any unmitigated welds in the list of 60 critical welds in the submittal.

Ameren Missouri Response:

The Callaway risk-informed analysis of pipe-break LOCA assigns an equal probability of break to all welds as a function of size without applying bottom-up weighting factors based on reactor system operating conditions, weld type, or credit for recent mitigation actions. Recognizing that Primary Water Stress Corrosion Cracking (PWSCC) is a concern for Alloy-600 welds, Ameren Missouri has implemented an inspection and maintenance program for Callaway. When all past and planned mitigation steps are complete, Alloy-600 welds will not introduce a higher break frequency relative to other weld types, which helps justify the equal break probability assumption.

The dissimilar metal weld inspection, evaluation, and mitigation program for Callaway Plant is implemented in procedure EDP-ZZ-04070 Appendix A, "Alloy 600 Management Plan." This program has been developed with the intent of meeting the regulatory requirements and industry guidance found in: 10 CFR 50 Appendix A, General Design Criteria 14, 15, 30, 31, and 32; NRC Bulletin 2001-01, 2002-01, and 2002-02, and NRC Regulatory Issue Summary 2008-25; and Section XI of the ASME Boiler and Pressure Vessel Code, as supplemented by NRC, NEI and Materials Reliability Program (MRP) criteria including ASME Code Cases N-722-1, N-729-6, and N-770-5, as incorporated by reference in 10 CFR 50.55a, NEI 03-08, MRP Letter 2004-053, MRP-126, and MRP-206.

Regarding the 60 critical welds that are listed in Table 6.3A-1, as provided in Enclosure 2, Attachment 2-5, and in Tables 7-3 and 9-3, as provided in Enclosure 3, Attachment 3-3 to this LAR supplement, only item 28, identified as Weld 2-RV-302-121-A (SAFE-END TO LOOP #1 RPV INLET NOZZLE) is composed of material that could be susceptible to PWSCC. This weld has been mitigated with water jet peening, as have the other reactor vessel nozzle welds and the reactor vessel bottom mounted instrumentation nozzles. The reactor vessel head has been replaced with one made of material not susceptible to PWSCC, and the pressurizer nozzles have been mitigated with a full structural weld overlay. The only remaining pressure boundary welds susceptible to PWSCC and not yet mitigated are the hot and cold leg thermowells, which are planned to be replaced in Refuel 27.

(40) The NRC staff notes that to monitor structural integrity, pressurized water reactor plant owners periodically inspect RCS piping and associated components beyond the NRC regulations such as operator walkdowns, opportunistic inspections, the boric acid corrosion program, and the fatigue monitoring program per Materials Reliability Program (MRP)-146, Revision 1, “Management of Thermal Fatigue in Normally Stagnant Non- Isolable Reactor Coolant System Branch Lines.” Discuss any periodic inspections at Callaway that monitor the structural integrity of the RCS piping and components beyond the NRC regulations that could minimize the potential for pipe and component failures.

The licenses stated that it will discuss these periodic inspection and monitoring programs in its supplement, including the inspections that will be performed for license renewal to monitor the structural integrity of the RCS piping and components as part of defense-in-depth measures.

Ameren Missouri Response:

In accordance with a 2012 NEI industry commitment (tracked as Ameren Missouri Commitment (COMN) 50246) to implement NEI-03-08, “Guideline for the Management of Materials Issues,” procedures APA-ZZ-04070, "Materials Degradation Management Plan," and EDP-ZZ-04070, "Management of Engineering Materials Degradation Management Plan Subprograms Activities," have been established. Section 4.2 of EDP-ZZ-04070 lists eight subprograms for management of RCS materials degradation, six of which are also described as aging management programs in Chapter 19 of the Callaway Plant FSAR. The inspections and monitoring of the structural integrity of the RCS piping and components that are included in the Engineering Materials Degradation Management Plan subprograms may be summarized as follows.

- Alloy 600 Management Program (FSAR 19.1.5, "Cracking of Nickel-Alloy Components and Loss of Material due to Boric Acid-Induced Corrosion in Reactor Coolant Pressure Boundary Components.") The program manages cracking of nickel-alloy components and associated welds in reactor coolant pressure boundary components, as well as loss of material due to boric acid-induced corrosion in susceptible, safety-related components in the vicinity of nickel-alloy reactor coolant pressure boundary components. The program provides inspection requirements for the reactor pressure vessel, pressurizer, and reactor coolant pressure boundary piping components if they contain primary water stress corrosion cracking susceptible materials designated alloys 600/82/182. The program also includes inspection requirements for the reactor pressure vessel upper head. Additional details are provided the response to Item 39.

- Steam Generator Management Program (FSAR 19.1.9, "Steam Generators.") The program manages cracking, loss of material, reduction of heat transfer, and wall thinning of the steam generator tubes, plugs, sleeves and secondary side steam generator internal components. The program detects degradation through nondestructive examinations (NDE), visual inspection, and in situ pressure testing. Assessments are used to verify that the steam generator performance criteria defined in Callaway Technical Specification 5.5.9 have been met over the last operating interval and ensure that the criteria will be met over the next operating interval. NDE inspection and primary to secondary leak rate monitoring are conducted consistent with the requirements of Callaway Technical Specifications and NEI 97-06, “Steam Generator Program Guidelines”. The program ensures

that performance criteria are maintained for operational leakage, accident induced leakage, and structural integrity as prescribed in the Callaway Technical Specifications.

In accordance with the current Callaway license renewal commitment 34, as submitted in letter ULNRC-06080, dated February 14, 2014, Ameren Missouri will resolve a concern regarding potential failure at the divider plate welds to primary head and tubesheet cladding for the replacement steam generators (RSGs), using one of the following options: (1) between Fall 2025 and Fall 2029 (when the RSGs will have been in service for more than 20 years), inspect the divider plate welds using methods capable of detecting PWSCC in the divider plate assemblies and the associated welds; (2) by Fall 2023, establish a new method of analysis (subject to NRC approval under 10 CFR 50.59) to provide a technical basis for concluding that the steam generator RCS pressure boundary is adequately maintained with the presence of steam generator divider plate weld cracking; or (3) by Fall 2023, if the results of industry and NRC studies or operating experience supports the conclusion that potential failure of the steam generator RCS pressure boundary due to PWSCC cracking of steam generator divider plate welds is not a credible concern, pursue resolution of the issue based on such conclusion.

In accordance with the current Callaway license renewal commitment 35, also submitted in letter ULNRC-06080, Ameren Missouri will also resolve a concern regarding potential failure of primary-to-secondary pressure boundary due to PWSCC cracking of tube-to-tubesheet welds, using one of the following options: (1) between Fall 2025 and Fall 2029, perform a one-time inspection of a representative number of tube-to-tubesheet welds in each steam generator to determine if PWSCC cracking is present, and if necessary, resolve any identified cracking through repair or engineering evaluation to justify continued service, and establish a periodic monitoring program to perform routine tube-to-tubesheet weld inspections for the remaining life of the steam generators or (2) by Fall 2023, perform an analytical evaluation of the steam generator tube-to-tubesheet welds that either determines that the welds are not susceptible to PWSCC (a new method of analysis subject to NRC approval under 10 CFR 50.59), or redefines the reactor coolant pressure boundary of the tubes, such that the steam generator tube-to-tubesheet welds are not required to perform a reactor coolant pressure boundary function (which would be a change to design or performance requirements subject to NRC approval under 10 CFR 50.59).

- Boric Acid Corrosion Control Program (FSAR 19.1.4 – "Boric Acid Corrosion.") The program, which is implemented in EDP-ZZ-01004, "Boric Acid Corrosion Control Program," manages loss of material and increased resistance of connection due to borated water or reactor coolant leakage and includes provisions to identify leakage through inspection and examination. The principal industry guidance document used is WCAP-15988-NP, “Generic Guidance for an Effective Boric Acid Inspection Program for Pressurized Water Reactors.” The program relies in part on implementation of recommendations of NRC Generic Letter 88-05, “Boric Acid Corrosion of Carbon Steel Reactor Pressure Boundary Components in PWR Plants.” Additionally, the program includes examinations conducted during inservice inspection program pressure tests performed in accordance with ASME Section XI requirements.

- Integrated Fatigue Management Program (FSAR 19.2.1, "Fatigue Monitoring.") The program, which is implemented in procedure EDP-ZZ-01123, "FATIGUEPRO

Cycle/Transient Monitoring," manages fatigue cracking caused by anticipated cyclic strains in metal components of the reactor coolant pressure boundary, by assuring compliance with the limits on cyclic and transient occurrences provided in FSAR Section 3.9(N).1.1, “Design Transients,” thereby ensuring that components are maintained within the design limits, in accordance with Technical Specification 5.5.5, "Component Cyclic or Transient Limit." Cumulative fatigue usage at monitored locations is tracked by one of the following methods: (1) Cycle Counting (CC) monitoring, which tracks transient event cycles affecting the location to ensure that the numbers of transient events analyzed by the fatigue analyses are not exceeded (note that this method does not calculate cumulative usage factors (CUFs); (2) Cycle-Based Fatigue (CBF) monitoring, which utilizes the CC results and stress intensity ranges generated with the ASME III methods that use three dimensional six component stress-tensor methods to perform CUF calculations for a given location, and tracking of fatigue accumulation to determine approach to the ASME allowable fatigue limit of 1.0; or (3) Stress-Based Fatigue (SBF) monitoring, which computes a "real time" stress history for a given component from data collected from plant instruments to calculate transient pressure and temperature, and the corresponding stress history at the critical location in the component, which is analyzed to identify stress cycles, and then a CUF is calculated either by using a three dimensional, six component stress tensor method meeting ASME III NB-3200 requirements, or a method will be benchmarked consistent with the NRC Regulatory Issue Summary (RIS) 2008-30. The program also considers the effects of the reactor water environment for a set that includes the NUREG/CR-6260 sample locations for a newer-vintage Westinghouse Plant, plant-specific bounding EAF locations in the reactor coolant pressure boundary, and reactor vessel internals locations with fatigue usage calculations. The associated Fatigue Program Notebook also incorporates guidance from Electric Power Research Institute (EPRI) MRP Technical Reports, including MRP-146, MRP-146 Revision 2, and supplement MRP-146S.

- Reactor Vessel Internals Monitoring (FSAR 19.1.6 – "PWR Vessel Internals.") This program, which is implemented in EDP-ZZ-04070, Appendix C, "PWR Vessel Internals Aging Management Program," is used to manage the aging effects of reactor vessel internal (RVI) components, including (a) various forms of cracking, including stress corrosion cracking (SCC), primary water stress corrosion cracking (PWSCC), irradiation assisted stress corrosion cracking (IASCC), or cracking due to fatigue/cyclical loading; (b) loss of material induced by wear; (c) loss of fracture toughness due to either thermal aging or neutron irradiation embrittlement; (d) changes in dimensions due to void swelling or distortion; and (e) loss of preload due to thermal and irradiation-enhanced stress relaxation or creep. The program relies on implementation of the guidance included in Electric Power Research Institute (EPRI) 3002017168 (MRP-227 Revision.1-A), "Materials Reliability Program: Pressurized Water Reactor Internals Inspection and Evaluation Guidelines," and inspection standard MRP-228.

- Inservice Inspection Program (FSAR 19.1.1 – "ASME Section XI Inservice Inspection, Subsections IWB, IWC, and IWD.") The program, which is implemented in procedure EDP-ZZ-01003, "Inservice Inspection Program," consists of periodic volumetric, surface, and/or visual examinations and leakage testing of ASME Class 1, 2, and 3 pressure-retaining components, including welds, pump casings, valve bodies, integral attachments, and pressure-retaining bolting for assessment, signs of degradation, and corrective actions. In accordance with the definition of INSERVICE TESTING PROGRAM in Technical Specification 1.1, this program fulfills the requirements of 10 CFR 50.55a(f).

- Non-destructive Examination Program Non-destructive examinations that are used to evaluate the structural integrity of RCS piping and components are conducted in accordance with applicable codes and standards by personnel who are qualified in accordance with the Operating Quality Assurance Manual (OQAM).

- RCS Leakage Rate Tracking Monitoring of RCS leakage is performed in accordance with procedure OSP-BB-00009, "RCS Inventory Balance," to satisfy Technical Specification Surveillance Requirements 3.4.13.1, "Verify RCS operational LEAKAGE is within limits by performance of RCS water inventory balance," and 3.4.13.2, "Verify primary to secondary LEAKAGE is ≤ 150 gallons per day through any one SG." Tiered action levels and responses for abnormally high RCS identified leakage or unidentified leakage that does not exceed the Technical Specification 3.4.13 Limiting Condition for Operation limit(s) have been established in accordance with the guidance of WCAP-16465-NP, "Pressurized Water Reactor Owners Group Standard RCS Leakage Action Levels and Response Guidelines for Pressurized Water Reactors," and are implemented in procedure ODP-ZZ-00029, "RCS Leakage Action Level Guideline." Tiered action levels and responses for abnormally high primary-to-secondary leakage that does not exceed the Technical Specification 3.4.13 Limiting Condition for Operation limit have been established in accordance with the guidance of the EPRI "PWR Primary to Secondary Leak Guidelines," Revision 4 and are implemented in procedure APA-ZZ-01023, "Primary-To-Secondary Leakage Program."

In addition to the subprograms for management of RCS materials degradation, the following aging management programs also include inspections and monitoring of the structural integrity of the RCS piping and components.

- FSAR 19.1.3, "Reactor Head Closure Stud Bolting." The program includes periodic visual and volumetric examinations of reactor vessel flange stud hole threads, reactor head closure studs, nuts, and washers and performs visual inspection of the reactor vessel flange during primary system leakage tests, as well as preventive measures as recommended in Regulatory Guide 1.65, “Materials and Inspections for Reactor Vessel Closure Studs” to use stable lubricants and NUREG-1339, “Resolution of Generic Safety Issue 29: Bolting Degradation or Failure in Nuclear Plants,” to use bolting material for closure studs that has an actual yield strength less than 150 kilopounds per square inch.

- FSAR 19.1.8, "Bolting Integrity." The program manages cracking, loss of material and loss of preload for pressure retaining bolting. The program includes periodic inspection of closure bolting for pressure-retaining components consistent with recommendations as delineated in NUREG-1339, “Resolution of Generic Safety

Issue 29: Bolting Degradation or Failure in Nuclear Power Plants," and EPRI NP-5769, "Degradation and Failure of Bolting in Nuclear Power Plants," Volume 1 and 2, with the exceptions noted in NUREG-1339. The Bolting Integrity program also includes activities for preload control, material selection and control, and use of lubricants/sealants as delineated in EPRI TR-104213, "Bolted Joint Maintenance and Application Guide." The ASME Section XI Inservice Inspection, Subsections IWB, IWC and IWD program (FSAR 19.1.1) supplements the Bolting Integrity program by providing the requirements for inservice inspection of ASME Class 1, 2, and 3 safety-related pressure retaining bolting. Reactor pressure vessel head closure studs are managed by the Reactor Head Closure Stud Bolting program (FSAR 19.1.3).

License Amendment Request, Exemption Request, and Performance Monitoring Program

(41) The LAR and exemption request do not provide information relevant to Key Principle 5 in RG 1.174, Revision 3 (i.e., the impact of the proposed licensing basis change should be monitored using performance measurement strategies). Demonstrate that the LAR and exemption request will meet Key Principle 5 of RG 1.174, Revision 3, using existing and new performance monitoring strategies. The demonstration should identify the strategies and how they support meeting Key Principle 5.

The licensee stated that it will describe configuration management, the periodic PRA review (discussed in Item 43 below), periodic strainer inspections, containment walkdowns, and similar programs and inspections in a supplement. The licensee stated that it will explain how the programs and actions ensure that the risk-analysis remains valid.

Ameren Missouri Response:

The following performance monitoring strategies are used to ensure that the impact of the LAR and requested regulatory exemptions remains within the risk acceptance guidelines of RG 1.74.

- Performance monitoring to ensure that relevant elements of the risk-informed assessment accurately represent the risk impacts is accomplished through periodic review and update of the PRA model, as described in the response to Item 43.

- Performance monitoring for structural integrity of the RCS pressure boundary is described in the response to Item 40.

- Performance monitoring for the structural integrity of the containment recirculation sumps, and to verify no debris blockage of the containment recirculation sumps, is described in proposed Technical Specification Surveillance Requirement 3.6.8.1, provided in Enclosure 2, Attachments 3-2 and 3-4 to this LAR supplement. The periodic inspections are conducted in accordance with procedure OSP-EJ-00003, "Containment Recirculation Sump Inspection."

- Performance monitoring for limits on fiber, particulate, chemical, latent, and miscellaneous debris loading in containment is accomplished through the following:

    - As part of the system monitoring program described in EDP ZZ 01131, "Plant Health and Performance Monitoring Program," systems engineers conduct periodic walkdowns per EDP-ZZ-01131 Appendix K, "Engineering System Walkdowns." These walkdowns include inspection items to verify housekeeping is maintained in system areas and components are properly labeled, and to detect improper use of tape, restraints, tie-wraps, or barriers.

    - Quantities of aluminum and zinc in containment, which are potential sources of chemical debris, are tracked using the Containment Aluminum and Zinc Inventory Tracking System (CAZITS), as described in procedure EDP-ZZ-04024, "Configuration Control."

    - Monitoring of coatings in containment for degradation through periodic inspections, and controls to prevent introduction of new unqualified coatings in containment are provided in procedure EDP-ZZ-03000, "Containment Building Coatings."

    - During work activities in containment in all Modes, monitoring maintenance of cleanliness (i.e., housekeeping) and tracking of tools and materials (i.e., in-process material controls) are performed by plant staff and supplemental workers in accordance with procedure MDP-ZZ-0STOR, "Staging and Storage of Materials, Equipment & Tools at the Callaway Energy Center."

    - Controls to assure retrievability of items taken into areas with limited accessibility and tracking of all items taken into areas subject to Foreign Material Exclusion level 1 (FME-1) controls (e.g., the containment recirculation sumps), and prohibitions on certain items (i.e., which may be a potential source of miscellaneous debris) from being taken into specific FME-1 areas are established through procedure APA-ZZ-00801, "Foreign Material Exclusion."

    - Inspections to verify compliance with controls and limits on temporary storage of transient combustible materials (a potential source of fiber or miscellaneous debris in containment) is accomplished through procedures APA-ZZ-00741, "Control of Combustible Materials," and FPP-ZZ-00100, "Site Wide Fire Protection Inspection Procedure."

    - New or replacement signs and equipment identification tags or labels in containment (a potential source of miscellaneous debris) are limited to those that have been qualified for permanent installation per procedure APA-ZZ-00300, "Component Labeling and Sign Program."

- Walkdown inspections are performed prior to Mode 4 entry at the end of each refueling outage by Radiation Protection personnel to verify removal of rags, protective clothing and temporary signs (e.g., radiological postings, caution tape, etc.) from containment per preventive maintenance task ID PM0825041.

- To satisfy the Technical Requirements surveillance found in FSAR 16.5.2.1.1.A.1, walkdown inspections are performed prior to Mode 4 entry at the end of each refueling outage by designated personnel to ensure cleanliness of containment (i.e., removal of loose debris, and compliance with limits on transient combustibles and aluminum and zinc brought into containment) per procedure OSP-SA-00004, "Visual Inspection of Containment for Loose Debris," and associated PM0913027.

- During maintenance activities in Modes 1-4, and in Mode 5 after establishment of containment cleanliness, daily monitoring is also performed per OSP-SA-00004 to ensure cleanliness of containment is maintained.

(42) Identify key elements of the risk-informed analysis and corresponding methods, approaches, and data that, if changed, would constitute a departure from the method used in the safety analysis as defined by 10 CFR 50.59.

The key elements are the items listed in the FSAR markup in Section 6.3A.2.1 (Page 101-109 of LAR Enclosure 2). The licensee stated that this list will be updated to include debris limits (it will likely refer to Table 6.3A-2 for debris limits) and CASA Grande in a supplement. (See Question 4 of this Appendix.)

Ameren Missouri Response:

Limits on debris, as described in proposed FSAR Table 6.3A-2, have been added to the list of key methods of evaluation in proposed FSAR Section 6.3A.2.1, as provided in Enclosure 2, Attachment 2-5 to this LAR supplement. See the responses to audit questions 5 and 6 provided in this supplement.

(43) Identify the relevant elements of the risk-informed assessment that may need to be periodically updated. The licensee must describe the program or controls that will be used to ensure relevant elements of the risk- informed assessment are periodically updated.

Callaway will consider changing the FSAR Section 6.3A.2 to be similar to the Vogtle response to Limitation and Condition 8 in its risk-informed LAR for GL 2004-02. The intent of the identification of relevant elements that should be considered for update is to assure that the risk assessment remains valid. The update will be provided, as determined by the licensee, in a supplement.

Ameren Missouri Response:

The critical parameter for Callaway is the amount of fibrous insulation inside containment.

This is the factor that Callaway is justifying with the use of the Risk over Deterministic approach for resolving GSI-191/ GL 2004-02. The other factors to be monitored are the amounts of qualified and unqualified coatings and the aluminum inventory in containment.

The modifications performed inside Containment every refueling outage (containment modifications can only be installed during refueling outages) will be reviewed for changes in the amount of fibrous insulation, coatings debris source terms, and aluminum inventory inside Containment. The Engineering Design process documented in EDP-ZZ-04600 states that any modifications inside containment must be performed to Design Guide ME-012, "Containment Sumps," which provides guidance regarding additions of fibrous debris while EDP-ZZ-04600 Attachment 2, DI-27 requires that the Design Engineer check with the Coatings Engineer for coatings changes.

The list of awareness items to be checked each Cycle includes:

1. Fibrous Insulation changes inside Containment

2. Coatings Changes

    a. Unqualified Coatings
    b. Qualified Coatings
    c. Zinc – Galvanized coatings

3. Aluminum inventory changes

4. Scaffolding, storage boxes, struts, supports, etc. proposed for permanent installation or storage in containment during operation.

Every 4.5 years (three 18-month refueling cycles), a review of the validity of the risk-informed LAR will be performed that considers industry-wide changes in regulatory guidance, initiating event frequencies, component and equipment reliability factors, PRA model changes that pertain to the risk-informed GSI-191 resolution, and other emergent industry and plant-specific concerns. The review will include an assessment of cumulative containment configuration changes and changes to operating practices (both beneficial and detrimental) that occur during intervening outages. This periodic review requirement has been incorporated in proposed FSAR 6.3A.2.2, "Changes to Plant Design and Operating Practices," as provided in Enclosure 2, Attachment 2-5 to this supplement. Changes that increase risk above the criteria defined in the response to audit question 44 shall be communicated by the process defined in the response to audit question 44.

(44) Describe a reporting and corrective action strategy for addressing situations in which an update to the risk-informed assessment reveals that the acceptance guidelines described in Section 2.4 of RG 1.174, Revision 3, have been exceeded.

The discussion of this item focused on whether reporting should be based on exiting Region III or Region II. The licensee will evaluate this issue and determine whether it intends to use Region II or Region III and clarify this point with a justification in a supplement.

Ameren Missouri Response:

The reporting requirements in proposed FSAR 6.3A.2.3, "Reporting," as provided in Enclosure 2, Attachment 2-5 to this supplement, have been revised to state the following:

> Nonconforming conditions that make the strainer(s) inoperable (during the Modes of applicability) for longer than the required TS completion time will meet the 10 CFR 50.73 reporting criteria for a condition prohibited by TS. Conditions that cause the containment recirculation sump strainers to be inoperable and result in the debris- related ΔCDF or ΔLERF to be greater than the RG 1.174 Region III acceptance guidance are to be reported in accordance with 10 CFR 50.72 and 10 CFR 50.73 as unanalyzed conditions that significantly degrade plant safety. Conditions that cause emergency sump strainers to be inoperable must exceed the RG 1.174 Risk Region III – low risk threshold.

References

[1] Ameren Missouri Letter ULNRC-06526, "Request for License Amendment and Regulatory Exemptions for a Risk-Informed Approach to Address GSI-191 and Respond to GL 2004-02 (LDCN 19-0014)," dated March 31, 2021 (ADAMS Accession No. ML21090A184)

[2] NRC Generic Letter 2004-02, "Potential Impact of Debris Blockage on Emergency Recirculation During Design Basis Accidents at Pressurized-Water Reactors," dated September 13, 2004 (ADAMS Accession No. ML042360586)

[3] Ameren Missouri Letter ULNRC-06550, "Application to adopt 10 CFR 50.69, “Risk-Informed Categorization and Treatment of Structures, Systems and Components for Nuclear Power Reactors” dated October 30, 2020 (ML20304A455)

[4] TSTF-505-A, Rev. 2, “Technical Specifications Task Force Improved Standard Technical Specifications Change Traveler,” November 2018.

[5] Ameren Missouri Letter, ULNRC-06688, "Request for License Amendment to Revise Technical Specifications to Adopt TSTF-505, Revision 2, “Provide Risk-Informed Extended Completion Times - RITSTF Initiative 4B,” and TSTF-439, Revision 2, “Eliminate Second Completion Times Limiting Time from Discovery of Failure to Meet an LCO” (LDCN 20-0007)," dated October 21, 2021 (ADAMS Accession No. ML21294A394)

[6] National Fire Protection Association (NFPA) 805, "Performance-Based Standard for Fire Protection for Light Water Reactor Electric Generating Plants," 2001 Edition (NFPA 805)

[7] Ameren Missouri Letter, ULNRC-05781, "Request for License Amendment to Adopt NFPA 805, Performance-Based Standard for Fire Protection for Light Water Reactor Generating Plants (2001 Edition)," dated August 29, 2011 (ADAMS Accession Number ML112420022)

[8] NRC Regulatory Guide (RG) 1.174, "An Approach for Using Probabilistic Risk Assessment in Risk-Informed Decisions on Plant-Specific Changes to the Licensing Basis," Revision 3, January 2018 (ADAMS Accession No. ML17317A256).

[9] RG 1.200, "Acceptability of Probabilistic Risk Assessment Results for Risk-Informed

Activities," Revision 3, December 2020.

[10] RG 1.200, "An Approach for Determining the Technical Adequacy of Probabilistic Risk Assessment Results for Risk-Informed Activities," Revision 2, March 2009.

[11] ASME/ANS RA-S CASE 1, Case for ASME/ANS RA-Sb-2013, "Standard for Level 1/Large Early Release Frequency Probabilistic Risk Assessment for Nuclear Power Plant Applications," ASME and ANS, November 2017.

[12] NRC Letter, U.S. Nuclear Regulatory Commission Acceptance of ASME/ANS RA-S Case 1, March 12, 2018 (ADAMS access ML18017A964 and ML18017A966).

[13] NEI Letter to NRC, "Final Revision of Appendix X to NEI 05-04/07-12/12-16, Close-Out of Facts and Observations (F&Os)," (ADAMS Accession No. ML17086A431), dated February 21, 2017.

[14] Nuclear Regulatory Commission (NRC) Letter to Mr. Greg Krueger (NEI), "U.S. Nuclear Regulatory Commission Acceptance on Nuclear Energy Institute Appendix X to Guidance 05-04, 7-12, and 12-13, Close Out of Facts and Observations (F&Os)," May 3, 2017, Accession Number ML17079A427.

[15] NEI 17-07, Revision 2, "Performance of PRA Peer Reviews Using the ASME/ANS PRA Standard," July 2019 (ADAMS Accession No. ML19228A242).

[16] PRA-OEH-ANALYSIS, "Other External Hazards: Screening Assessment Notebook," Revision 000, Update 8.

[17] ASME/ANS RA-S-2009, Addenda to ASME/ANS RA-S-2008, "Standard for Level 1/Large Early Release Frequency Probabilistic Risk Assessment for Nuclear Power Plant Applications," February 2009.

[18] PWROG-19012-P, "Peer Review of the Callaway Internal Events and Internal Flood Probabilistic Risk Assessment Model," April 2019.

[19] PWROG-19020-NP Revision 1, "Newly Developed Method Peer Review Pilot – General Screening Criteria for Loss of Room Cooling in PRA Modeling Risk Management Committee," PA-RMSC-1647, Revision 1, April 2020.

[20] PWROG-18027-NP Revision 0, "Loss of Room Cooling in PRA Modeling," April 2020.

[21] PWROG-19034-P, "Independent Assessment of Facts & Observations Closure and Focused Scope Peer Review of the Callaway Probabilistic Risk Assessments," November 2019.

[22] AMN#PES00031-REPT-001, "Callaway Energy Center Probabilistic Risk Assessment Focused Scope Peer Review," July 2020.

[23] AMN#PES00031-REPT-002, "Callaway Energy Center Probabilistic Risk Assessment Peer Review F&Os Closure," July 2020.

[24] PWROG-19022-P, "Peer Review of the Callaway External Hazard Screening Assessment and High Winds Probabilistic Risk Assessment," April 2019.

[25] PWROG-18044-P, "Peer Review of the Callaway Seismic Probabilistic Risk Assessment," June 2018.

[26] PWROG-19011-P, "Independent Assessment of Facts & Observations Closure and Focused Scope Peer Review of the Callaway Seismic Probabilistic Risk Assessment," March 2019.

[27] NUREG/CR-6850 (also EPRI 1011989), "Fire PRA Methodology for Nuclear Power Facilities," September 2005, with Supplement 1 (EPRI 1019259), September 2010.

[28] LTR-RAM-II-10-019, "Fire PRA Peer Review Against the Fire PRA Standard SRs From Section 4 of the ASME/ANS Standard for Level 1/Large Early Release Frequency Probabilistic Risk Assessments for Nuclear Power Plant Applications for The Callaway Nuclear Plant Fire PRA," October 2009.

[29] AMN#PES00021-REPT-001, "Callaway Energy Center Fire Probabilistic Risk Assessment Peer Review F&Os Closure," June 2019.

[30] AMN#PES00031-REPT-003, "Callaway Energy Center Probabilistic Risk Assessment Focused Scope Peer Review," November 2020.

[31] AMN#PES00042-REPT-002, "Callaway Energy Center Fire Probabilistic Risk Assessment Peer Review F&Os Closure Review," February 2021.

[32] Regulatory Guide 1.174, “An Approach For Using Probabilistic Risk Assessment in Risk Informed Decisions on Plant-Specific Changes to the Licensing Basis,” Revision 1, November 2002. (ADAMS Accession No. ML023240437).

[33] Regulatory Guide 1.174, “An Approach For Using Probabilistic Risk Assessment in Risk Informed Decisions on Plant-Specific Changes to the Licensing Basis,” Revision 2, May 2011. (ADAMS Accession No. ML100910006).

[34] PRA-IE-QUANT, "At-Power Internal Events PRA, Quantification Analysis Notebook," Revision 2, May 2021.

[35] PRA-FLOOD-QUANT, "At-Power Internal Flooding PRA, Modeling and Quantification Analysis Notebook," Revision 1, May 2021.

[36] PRA-HW-QUANT, "Quantification and Results of Plant Response Model," Revision 1, May 2021.

[37] PRA-FIRE-17671_013, "Callaway NFPA 805 Fire PRA Integrated Fire Risk Report," Revision 1, May 2021.

[38] PRA-SEISMIC-QUANT, "Seismic Probabilistic Risk Assessment, Quantification Analysis Notebook," Revision 1, June 2021.

[39] Letter (ULNRC-06678) from Union Electric to the NRC, “Supplemental Information for Application to Adopt 10 CFR 50.69, ‘Risk-Informed Categorization and Treatment of Structures, Systems and Components For Nuclear Power Reactors'", dated July 29, 2021 (ADAMS Accession No. ML21210A025).

[40] NRC Letter to Ameren Missouri, "Request for Additional Information - Callaway Plant, Unit

1 - License Amendment Request to Adopt 10 CFR 50.69, 'Risk-Informed Categorization and Treatment of Structures, Systems and Components for Nuclear Power Reactors,'" transmitted September 14, 2021 (ML21258A038).

[41] Letter (ULNRC-06689) from Union Electric to the NRC, “Response to Request for Additional Information Regarding License Amendment Request to Adopt 10 CFR 50.69, 'Risk-Informed Categorization and Treatment of Structures, Systems and Components for Nuclear Power Reactors'", dated October 13, 2021 (ADAMS Accession No. ML21286A681).

[42] Test Report for the Evaluation of FOAMGLAS, ALION-REP-CEC-9634-023.

[43] MEMO-9634-LDB-2019-02, FOAMGLAS CAD Model Assessment and WCAP-16530 Sensitivities.

[44] 1162CECGSI-R2-00, "Callaway Energy Center Head Loss Technical Report - Revision 00," 3/20/2017.

[45] NUREG/CR-6772, "GSI-191: Separate-Effects Characterization of Debris Transport in Water," August 2002, Table 3.5.

[46] NUREG/CR-6808, "Knowledge Base for Effect of Debris on Pressurized Water Reactor Emergency Core Cooling Sump Performance," February 2003.

[47] ALION-CAL-CEC-9345-002. Plant Pool Condition Analysis Report. Revision 0. April 4, 2017.

[48] ALION-CAL-CEC-9345-004. Strainer Head-Loss Analysis Report. Revision 1a. July 6, 2018.

[49] Calculation LF-09, "Loop Tolerance Calculation for LFL-0009 & 10," Revision 000.

[50] Calculation ZZ-525, "LOCA and MSLB Containment Pressure and Temperature Response," Revision 003

[51] Calculation ZZ-443, "Small Break LOCA Containment Pressure-Temperature Analysis," Revision 001C.

[52] Calculation EC-44, " Fuel Cycle 24 Decay Heat Load Calculation," Revision 000.

[53] Final Safety Analysis Report for the Operation of Callaway Plant, Unit No. 1 (FSAR) Table 5.4-13, "Pressurizer Relief Tank Design Data."

[54] FSAR Section 3.9(N).1.1, "Design Transients."

[55] FSAR 3.9(N).1.1, "Design Transients."

[56] NUREG-1829, “Estimating Loss-of-Coolant Accident (LOCA) Frequencies through the Elicitation Process,” April 2008.

[57] NUREG-2117, “Practical Implementation Guidelines for SSHAC Level 3 and 4 Hazard Studies,” Revision 1, April 2012.

[58] ALION-REP-CEC-9143-021, "CEC Consolidated Debris Analysis and GSI-191 Risk Assessment,".

[59] ALION-CAL-CEC-9143-017, "CEC GSI-191 Risk Informed Debris Transport Calculation,"

[60] Letter from Westinghouse Electric Company to US Nuclear Regulatory Commission, LTR-NRC-15-57, "Submittal of WCAP-17788-P/-NP, Volume 4, Revision 0, 'Comprehensive Analysis and Test Program for GSI-191 Closure (PA-SEE-1090) - Thermal-Hydraulic Analysis of Large Hot Leg Break with Simulation of Core Inlet Blockage' (Proprietary/Non-Proprietary)," July 1, 2015

[61] Letter from Westinghouse Electric Company to US Nuclear Regulatory Commission, LTR-NRC-15-61, "Submittal of WCAP-17788-P/-NP, Volume 1, Revision 0, 'Comprehensive Analysis and Test Program for GSI-191 Closure (PA-SEE-1090)' (Proprietary/Non-Proprietary)," July 10, 2015

[62] Letter from Westinghouse Electric Company to US Nuclear Regulatory Commission, LTR-NRC-15-63, "Submittal of WCAP-17788-P, Volume 5, Revision 0, 'Comprehensive Analysis and Test Program for GSI-191 Closure (PA-SEE-1090) - Autoclave Chemical Effects Testing for GSI-191 Long-Term Cooling' (Proprietary)," July 16, 2015 [corrected date]

[63] Letter from Westinghouse Electric Company to US Nuclear Regulatory Commission, LTR-NRC-15-64, "Submittal of WCAP-17788-P, Volume 6, Revision 0, "Comprehensive Analysis and Test Program for GSI-191 Closure (PA-SEE-1090) - Subscale Head Loss Test Program Report' (Proprietary)," July 16, 2015