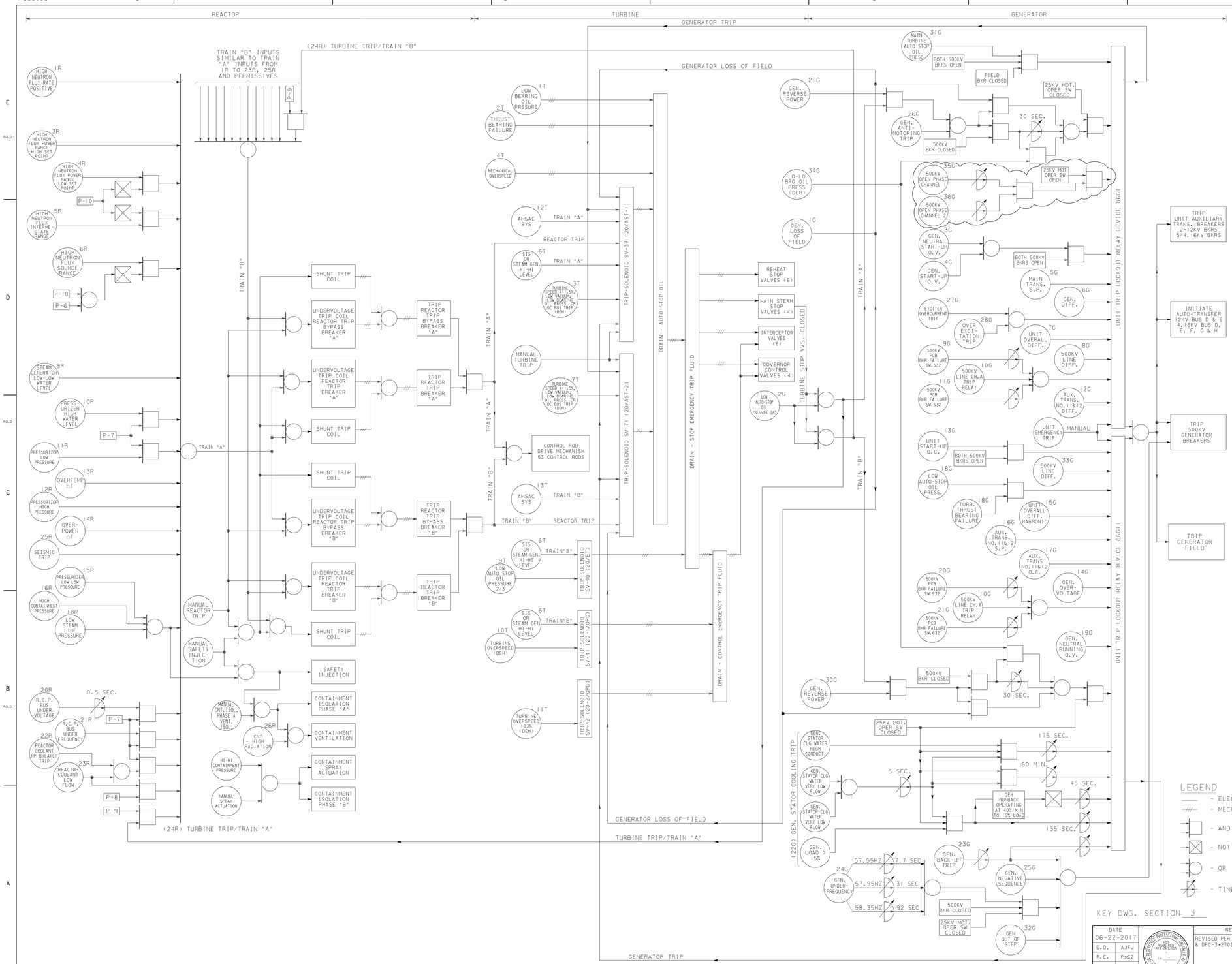

REACTOR, TURBINE & GENERATOR TRIPS

NO.	FUNCTION	DEVICE NO.	REMARKS
1R	HI NEUTRON FLUX RATE POSITIVE		2 OUT OF 4 OF ANY COMBINATION OF POS RATE TRIP NOT FROM THE SAME CHANNEL
3R	HI NEUTRON FLUX POWER RANGE		HIGH SET POINT - 2 OUT OF 4
4R	HI NEUTRON FLUX POWER RANGE		LOW SET POINT - 2 OUT OF 4
5R	HI NEUTRON FLUX INTERMEDIATE RANGE		1 OUT OF 2
6R	HI NEUTRON FLUX SOURCE RANGE		1 OUT OF 2
9R	STEAM GENERATOR LOW-LOW WTR LEVEL		2 OUT OF 3 PER LOOP 1 OUT OF 4 LOOPS
10R	PRESSURIZER HIGH WATER LEVEL		2 OUT OF 3 WITH P-7 INTERLOCK
11R	PRESSURIZER LOW PRESSURE		2 OUT OF 4 WITH P-7 INTERLOCK
12R	PRESSURIZER HIGH PRESSURE		2 OUT OF 4
13R	OVER TEMPERATURE △T		2 OUT OF 4
14R	OVER POWER △T		2 OUT OF 4
15R	PRESSURIZER LOW LOW PRESSURE		2 OUT OF 4 MANUAL BLOCK INTLK WITH P-11
16R	HIGH CONTAINMENT PRESSURE		2 OUT OF 4
18R	LOW STEAM LINE PRESSURE		2 OUT OF 3 IN ANY STEAM LINE MANUAL BLOCK INTLK WITH P-11
20R	REACTOR COOLANT PP BUS UNDERVOLTAGE		1/2 PER BUS AND 2/2 BUSSES WITH P-7 INTERLOCK
21R	REACTOR COOLANT PP BUS UNDERFREQ		2/3 PER BUS WITH P-7 INTERLOCK
22R	REACTOR COOLANT PP BREAKER TRIP		2/4 TRIP WITH P-7 INTERLOCK
23R	REACTOR COOLANT LOW FLOW		2/3 TRIP WITH P-7 INTERLOCK 1/4 TRIP WITH P-8 INTERLOCK
24R	TURBINE TRIP		2/3 AUTO STOP OIL PRESSURE OR 4/4 STOP VALVES CLOSED
25R	SEISMIC TRIP	K0311,K0312 K0313	2 OUT OF 3 PER AXIS
26R	CONTAINMENT HI RADIATION	RE11,RE12	AIR PARTICLE OR GAS MONITOR
1T	LOW BEARING OIL PRESSURE		TRIPS IF BEARING OIL DROPS BELOW PRESET VALUE
2T	THRUST BEARING FAILURE		TRIPS IN CASE OF EXCESSIVE WEAR OF THE THRUST BEARING SHOES
3T	TURB SPEED 111.5%, LOW VAC, LOW BRG OIL PRESS OR DEH DC BUS TRIP	CSV037	DEH OUTPUT
4T	MECHANICAL OVERSPEED		TRIPS WHEN UNIT REACHES A SPEED OF 110%
6T	SIS OR STEAM GEN. HI-HI LEVEL	K621	
7T	TURB SPEED 111.5%, LOW VAC,LOW BRG OIL PRESS OR DEH DC BUS TRIP	CSV171	DEH OUTPUT
9T	LOW AUTO STOP OIL PRESSURE	PS22	2/3 TURB AUTO STOP OIL TRIPPED PRESS SW
10T	TURBINE OVERSPEED	CSV041	DEH OUTPUT
11T	TURBINE OVERSPEED 103%	CSV042	DEH OUTPUT
12T	AMSAC SYSTEM	K101A	3/4 STM GEN LO LVL COINCIDENT W/ TURB POWER >40%
13T	AMSAC SYSTEM	K101B	3/4 STM GEN LO LVL COINCIDENT W/ TURB POWER >40%
1G	GENERATOR LOSS OF FIELD	40G1	
2G	LOW AUTO STOP OIL PRESSURE	63AST3, 4 & 5	AUTO STOP OIL PRESS.& TURB. STOP VALVES CLOSED SIGNALS FED INTO SSPS-OUTPUT K635
3G	GEN. NEUTRAL START-UP O.V.	59NST1G1	
4G	GEN. START-UP OVERVOLTAGE	59STIG1	
5G	MAIN TRANSF SUDDEN PRESSURE	63MT1	
6G	GENERATOR DIFFERENTIAL	87G1	
7G	UNIT OVERALL DIFFERENTIAL	87UI	
8G	500KV TIE LINE DIFFERENTIAL SET A	587-1A	
9G	500KV BREAKER FAILURE TIMING AUX. RELAY	550/562BFX2 -532	PCB SWITCH NO.532
10G	500KV LINE CH.A TRIPPING RELAYS	594L-1A 594L-1B 594L-1D	
11G	500KV BREAKER FAILURE TIMING AUX. RELAY	550/562BFX2 -632	PCB SWITCH NO.632
12G	AUX TRANSF #11&12 DIFFERENTIAL	87ATII,&12	
13G	UNIT START-UP OVERCURRENT	51STUI	
14G	GENERATOR OVERVOLTAGE	59GI	
15G	UNIT OVERALL DIFF. HARMONIC	87UHI	
16G	AUX TRANSF #11&12 SUDDEN PRESSURE	63ATII,&12	
17G	AUX TRANSF #11&12 OVERCURRENT	51ATII,&12	
18G	TURBINE THRUST BEARING FAILURE LOW AUTO STOP OIL PRESSURE	PS28 PS21	
19G	GEN. NEUTRAL RUNNING OVERVOLTAGE	59NGI	
20G	500KV BREAKER FAILURE TIMING AUX. RELAY	550/562BFX1 -532	PCB SWITCH NO.532
21G	500KV BREAKER FAILURE TIMING AUX. RELAY	550/562BFX1 -632	PCB SWITCH NO.632
22G	GEN. STATOR COOLING TRIP		GEN. STATOR CLG WATER, HIGH CONDUCT., VERY LOW WATER LEVEL & LOW WATER FLOW
23G	GENERATOR BACK-UP TRIP	21G1	
24G	GENERATOR UNDERFREQUENCY	81G1	
25G	GENERATOR NEGATIVE SEQUENCE	46G1	
26G	GEN. ANTI-MOTORING TRIP	PS30	STEAM IMPULSE PRESSURE
27G	EXCITER OVERCURRENT TRIP	51E1	
28G	OVEREXCITATION TRIP	OXP-2/K3	5 SEC. DELAY ON CONTACT CLOSING
29G	GENERATOR REVERSE POWER	32G1A	
30G	GENERATOR REVERSE POWER	32G1B	
31G	MAIN TURBINE AUTO STOP OIL PRESSURE	PS329X	
32G	GENERATOR OUT OF STEP	78G1	
33G	500KV TIE LINE DIFFERENTIAL SET B	587-1B	
34G	LO-LO BEARING OIL PRESSURE	CG2AMG1X	DEH OUTPUT
35G	500KV OPEN PHASE CHANNEL 1	46TGM-1, 46TGM-11	EITHER ACTIVE(-11) OR PASSIVE (-1) FOR DETECTION
35G	500KV OPEN PHASE CHANNEL 2	46TGM-2, 46TGM-21	EITHER ACTIVE(-21) OR PASSIVE (-2) FOR DETECTION

LEGEND

- ELECTRICAL CONTROL
- MECHANICAL CONTROL
- AND
- NOT
- OR
- TIME DELAY

PERMISSIVES

P-6 - 1/2 NEUTRON FLUX (INTERMEDIATE RANGE) ABOVE SET POINT
P-7 - 2/4 NEUTRON FLUX (POWER RANGE) ABOVE SET POINT (P-10) OR 1/2 FIRST STAGE TURBINE PRESSURE ABOVE SET POINT
P-8 - 2/4 NEUTRON FLUX (POWER RANGE) ABOVE SET POINT
P-9 - 2/4 NEUTRON FLUX (POWER RANGE) ABOVE SET POINT
P-10 - 2/4 NEUTRON FLUX (POWER RANGE) ABOVE SET POINT
P-11 - 2/3 PZR CHANNELS BELOW SET POINT
P-12 - 2/4 TAVG BELOW SET POINT

REFERENCES

DWG NO.

1. FUNCTION DIAGRAM BY WESTINGHOUSE ..... 495841 THRU 495858

KEY DWG. SECTION 3

NUCLEAR SAFETY RELATED

UNIT 1

DATE	
06-22-2017	
D.D.	AJFJ
R.E.	FxC2
I.V.	N/A
P.E.	N/A

REVISION DESCRIPTION: REVISED PER DDN-2*1631 & DFC-3*2702

I & C
FUNCTION DIAGRAM
REACTOR - TURBINE - GENERATOR PROTECTION

DIABLO CANYON POWER PLANT
PACIFIC GAS AND ELECTRIC COMPANY
SAN FRANCISCO, CALIFORNIA

DWG SCALE:
BILL OF MATL:
SUPSDS:
SUPSD BY:

DRAWING	SHEET	PAGE	REV
500825	1	0	26

U#2-500800

500825 1

RASTER=500825.dgn
DGN:500825.dgn
CAD User:AJFJ Date:06-22-2017