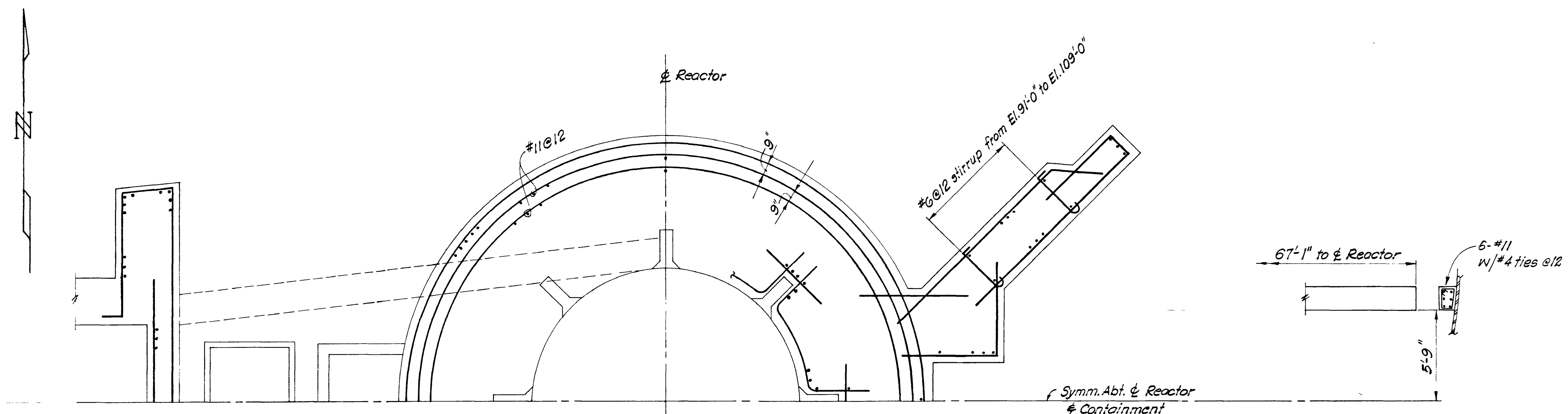


PARTIAL PLAN AT EL. 91'-0"
1/4" = 1'-0"

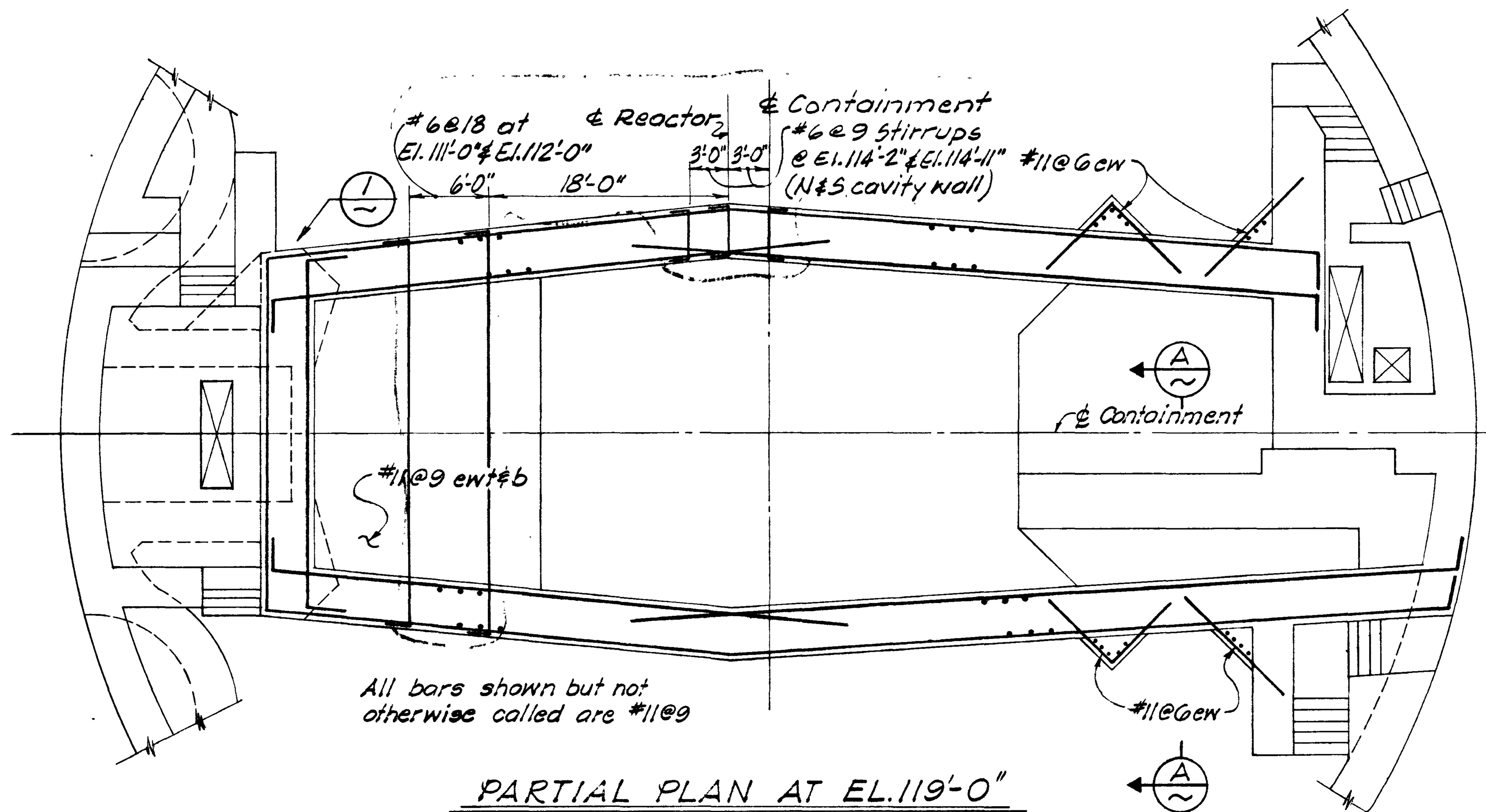


PARTIAL PLAN AT EL. 119'-0"
1/8" = 1'-0"

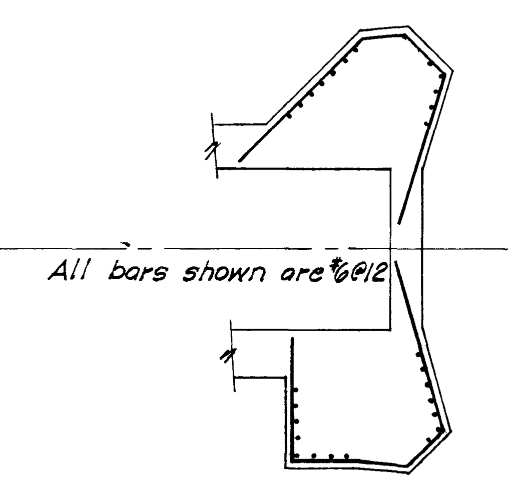


DETAIL 1
1/8" = 1'-0"

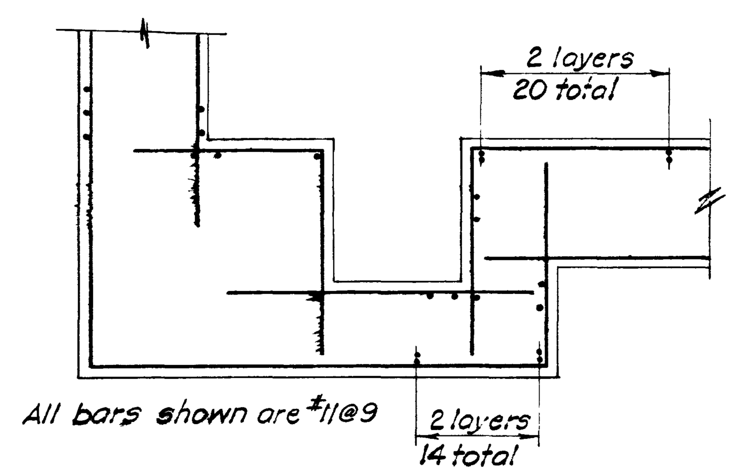


SECTION A
1/4" = 1'-0"

REFERENCES

1. Typical Details and Drawing List 443276

| | | | | | | | | | | | | | | | | | | | | | | | | | | | |
|---|---|---|---|---|---|---|---|---|---|---|---|---|---|---|---|---|---|---|---|---|---|---|---|---|---|---|---|
| MECH. | | | | | | | | | | | | | | | | | | | | | | | | | | | |
| ELEC. | | | | | | | | | | | | | | | | | | | | | | | | | | | |
| CIVIL | | | | | | | | | | | | | | | | | | | | | | | | | | | |
| ARCH. | | | | | | | | | | | | | | | | | | | | | | | | | | | |
| GROUP | DES. | ENG. | DES. | ENG. | DES. | ENG. | DES. | ENG. | DES. | ENG. | DES. | ENG. | DES. | ENG. | DES. | ENG. | DES. | ENG. | DES. | ENG. | DES. | ENG. | DES. | ENG. | DES. | ENG. | DES. | ENG. |
| | Chg. No. | | Chg. No. | | Chg. No. | | Chg. No. | | Chg. No. | | Chg. No. | | Chg. No. | | Chg. No. | | Chg. No. | | Chg. No. | | Chg. No. | | Chg. No. | | Chg. No. | | Chg. No. | |

COORDINATED APPROVAL FOR CONSTRUCTION

TABLE OF CHANGES

| NO. | DATE | DESCRIPTION | GM/SPEC | BY | CH | RESP. ENG. | SUPV. ENG. |
|---|---|---|---|---|---|---|---|
| 3 | 11-24-72 | Additional Reinf. bet. El. 111'-0" & 114'-11" | | JCR | WK | [signature] | [signature] |
| 2 | 6-7-72 | Approved for Const. to El. 133'-0" | 8831 | C.LI | K.Y. | | [signature] |
| 1 | 1-13-72 | Approved for Const. | 8831 | C.LI | S.B. | [signature] | [signature] |

UNIT 2

| APPROVED BY | |
|---|---|
| | GM 169972 |
| | SUPV. S. ROSENBERG |
| | DSGN. C. LI |
| | DR. J. MC. D. |
| | CH. S.B. |
| | O.K. S.R. |
| | DATE 1-6-72 |
| | SCALES AS NOTED |

INTERIOR CONCRETE REINFORCING
SECTIONS & DETAILS
CONTAINMENT STRUCTURE

DIABLO CANYON

DEPARTMENT OF ENGINEERING
PACIFIC GAS AND ELECTRIC COMPANY
SAN FRANCISCO, CALIFORNIA

REGISTERED PROFESSIONAL ENGINEER
RICHARD V. BETTINGER
No. 7865
CIVIL
STATE OF CALIFORNIA

COAST VALLEYS DIVISION

BILL OF MATERIAL
DRAWING LIST
SUPERSEDES
SUPERSEDED BY
SHEET NO. SHEETS

DRAWING NUMBER 443277 CHANGE 3

SCAN 3 IC

105 M/M Neg. 3

RM INDEXED REV. 3

4

PRINTED ON DIEPO NO. 1020 CLEARPRINT 12-70