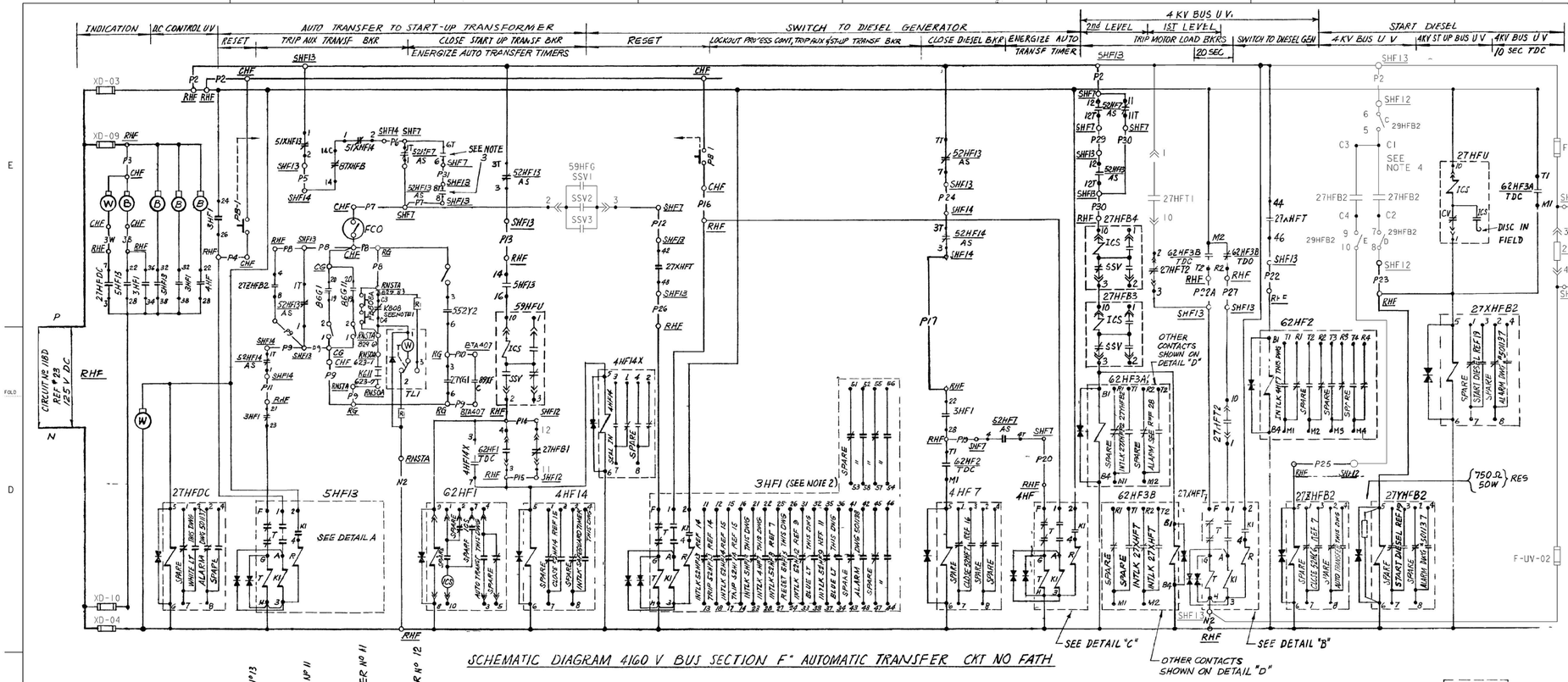

SCHEMATIC DIAGRAM 4160 V BUS SECTION F AUTOMATIC TRANSFER CKT NO FATH

ALARM CIRCUITS

	4 KV BUS SECT F UNDERVOLTAGE	4 KV BUS SECT F AUTOMATIC TRANSFER		4 KV BUS SECT F BUS OR START UP - OR BUS UV		D C CONTROL UNDERVOLTAGE	
DEVICE	27XHFT	5HF13	3HF1	27XHFB2	27YHFB2	27HFDC, 27HFB2, 27HFT1	
CKT Nº	AV4403DF	AV4412DF		AV4404DF		AV4406DF	

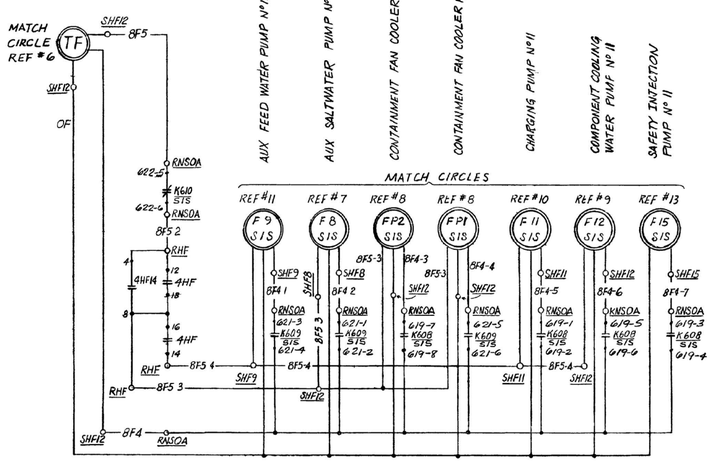

POTENTIAL FOR AUTO TRANSFER AND ENGINEERED SAFE-GUARD TIMERS CKT NO FATH

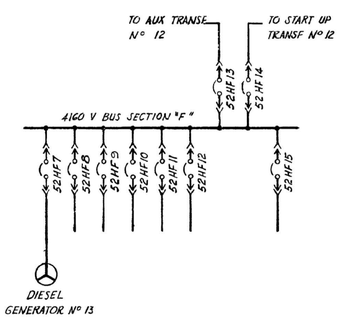

PARTIAL SINGLE LINE DIAGRAM BUS SECT 'F'

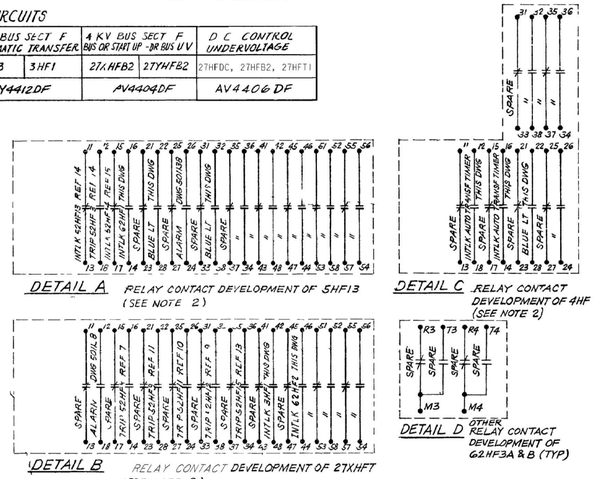

TABLE OF DEVICES

DEVICE Nº	FUNCTION	RATING OR RANGE	MFR.	TYPE	CAT Nº OR REF DWG	REMARKS
3HF1	DIESEL AUTO TRANSFER INTERLOCKING RELAY	125 VDC	ELECTRO SWITCH	2 PPDT ELECTRICAL CONTROL SWITCH	7325DD	ELECTRIC RESET
4HF	DIESEL AUTO TRANSFER CONTROL RELAY				7825DD	" "
4HF7	DIESEL AUTO TRANSFR CLOSE RELAY		W	SG	1342825	
4HF14	START UP AUTO TRANSFER CLOSE RELAY		W	SG	1342825	
5HF13	START UP AUTO TRANSFER TRIP RELAY		ELECTRO SWITCH	10 POLE SERIES 2A	825DD	ELECTRIC RESET
27HFDC	D.C. CONTROL BUS UNDERVOLTAGE RELAY	—	W	SG	1342825	
27HFB1	4KV BUS F AUTO TRANSFER UNDERVOLTAGE RELAY	—	—	—	(2 & 6)	1 3/4 RESIDUAL VOLTAGE DELAY
27HFB2	4KV BUS F START DIESEL UNDERVOLTAGE RELAY	—	—	—	(2 & 6)	
27XHFB2	4KV BUS F START DIESEL UNDERVOLTAGE AUX RELAY	125 VDC	W	SG	1342825	
27YHFB2	4KV BUS F START DIESEL UNDERVOLTAGE AUX RELAY		W	SG	1342825	
27HFT1	4 KV BUS F UNDERVOLTAGE TRIP RELAY (1ST LEVEL)	—	—	—	(2 & 6)	
27HFT2	4 KV BUS F UNDERVOLTAGE TRIP RELAY (2ND LEVEL)	—	—	—	(2 & 6)	INSTANTANEOUS
27HFU	4KV BUS F UNDERVOLTAGE RELAY (1ST UP TRANSF)	—	—	—	(2 & 6)	
4HF14X	START UP AUTO TRANS CLOSE AUX RELAY	125VDC	W	SG	1342825	
27HFB3, B4	4KV BUS F UNDERVOLTAGE TRIP RELAY (2ND LEVEL)	—	—	—	(2 & 6)	REF 30
27XHFT	4KV BUS UNDERVOLTAGE TRIP AUX RELAY	125 VDC	ELECTRO SWITCH	10 POLE SERIES 2A	7825DD	ELECTRIC RESET
27XHFB2	4 KV BUS F START DIESEL UV AUX RELAY		W	SG	1342825	
27Y-G1	GENERATOR UNDERVOLTAGE AUX RELAY	—	—	—	(17)	
29HFB2	27HFB2 FLUR CUTOUT SWITCH	—	ABB		(31)	10 POLE SW ASSY.
51XHF13	4 KV BUS F FDR OC AUX RELAY (AUX TRANSFORMER)	—	—	—	(1)	
51XHF14	4 KV BUS F FDR OC AUX RELAY (1ST UP TRANSFORMER)	—	—	—	(15)	
52HF7	4 KV BUS F FDR CKT BKR (DIESEL GENERATOR)	—	—	—	(2)	
52HF13	4 KV BUS F FDR CKT BKR (AUX TRANSFORMER)	—	—	—	(2)	
52HF14	4 KV BUS F FDR CKT BKR (1ST UP TRANSFORMER)	—	—	—	(2)	
59HFU	4KV BUS F FDR O/V RLY (1ST UP TRANSFORMER)	—	—	—	(2 & 6)	INSTANTANEOUS
59HFG	4KV BUS F FDR O/V RLY (DIESEL GEN)	—	—	—	(2 & 6)	" "
62HF1	START UP AUTO TRANSFER TIMER BUS F	48/125 DC	W	TDS	2938301413	0 TO 4 SEC
62HF2	DIESEL AUTO TRANSFER TIMER BUS F	125V DC	AGASTAT	ETR	ETR14D3B	TIME DELAY 55 TO 65 SEC
86G1	UNIT TRIP LOCKOUT RELAY	—	—	—	(17)	
86G11		—	—	—	(18)	
87XHFB	4 KV BUS F DIFF AUX RELAY	—	—	—	(12)	
552Y2-1	500 KV "C" E AUX RELAY	—	—	—	(18)	CONTACT IS CLOSED WHEN SQUARE BLK. ARE OPEN.
62HF3A	START DIESEL TIME DELAY RELAY BUS F	125VDC	AGASTAT	ETR	ETR14D-30-025	TIMER SET @ 10 SEC
62HF3B	XFR TO DSL TIME DELAY RELAY BUS F	125VDC	AGASTAT	ETR	ETR14D-30-025	TIMER SET @ 20 SEC
89XF	25 KV MOTOR OP DISC AUX SW	—	—	—	(20)	CONTACT IS CLOSED WHEN DISC SW IS OPEN
K606/SIS	SAFETY INJECTION AUX RELAY	—	—	—	(26)(7)(29)	
K609/SIS		—	—	—	(26)(7)(29)	
K610/SIS		—	—	—	(26)(27)(29)	
K611/SIS		—	—	—	(26)(27)(29)	

NOTES

1. TEST RELAY CONTACT OPEN DURING TEST
2. CONTACTS ARE SHOWN IN RESET POSITION
3. THESE CONTACTS PERMIT TRIPPING OF THE UNIT AUX TRANSF BKR ON 2ND LEVEL U.V. WHEN THE DSL GEN AND THE UNIT AUX TRANSF ARE PARALLELED.
4. CONTACT C1-C2 MAY ALLOW VOLTAGE READING ACROSS AN INTERNAL HIGH IMPEDANCE TRIP CIRCUIT MONITOR (TCM) WHERE NO VOLTAGE IS EXPECTED DURING POST MAINTENANCE TESTING. THE TCM FUNCTION IS NOT USED WITH AUTO TRANSFER SCHEME TO START D/G NOR WILL IT AFFECT ITS FUNCTION. (REF: 663332-220 PAGES 12-11, 6-17)

EQUIPMENT LOCATION

BTH106	TERMINAL BOX H106	RNSTA	RACK NU SAFEGD TEST A
RHF	ENG SAFEGUARD RELAY BOARD BUS F		
CHF	CONTROL BOARD ENG SAFEGUARD BUS F		
CG	CONTROL BOARD MAIN GENERATOR		
RG	GENERATOR RELAY BOARD		
SHF7	SWGR 4KV BUS F CUBICLE 7		
RNSOA	RACK NU SAFEGD OUTPUT A		
BTA407	TERM BOX A407 FOR DEVICE 89XF		

REFERENCES

1	DESCRIPTION OF ELECT SCHEMATIC DIAG SYMBOLS & CIRCUIT DESIGNATIONS	DWG Nº 050003
2	SINGLE LINE METER & RELAY DIAG 4160 V SYSTEM (BUS SECT F, G & H)	437533
3	SCHEMATIC DIAG 4 KV SYSTEM AUTOMATIC TRANSFER (BUS SECT D & E)	437624
4	(BUS SECT G)	437626
5	(BUS SECT H)	437627
6	4 KV BUS POTENTIAL & SYNCHRONIZING BUS SECT F G & H	437612
7	AUX SALT WATER PUMPS	437594
8	CONTAINMENT FAN COOLERS	437600
9	COMPONENT COOLING WATER PUMPS	437593
10	CHARGING PUMPS	437595
11	AUX FEEDWATER PUMPS	437583
12	4160 V BUS DIFFERENTIAL	437611
13	SAFETY INJECTION PUMPS	431589
14	AUX TRANSFORMER Nº 12 & ASSOCIATED CKT BKRS, SH 2	437664
15	START-UP TRANSFORMER Nº 12 & ASSOCIATED CKT BKRS, SH 2	437621
16	DIESEL GENERATORS & ASSOCIATED CKT BKRS, SH 2	437666
17	GENERATOR CONTROL SHEET Nº 1	437557
18	GENERATOR CONTROL SHEET Nº 2	437558
19	4KV DIESEL GENERATORS CONTROL SH 1	437667
20	25KV ISOPHASE BUS MOTOR OP DISC SW	437532
21	LOGIC DIAG 4160 V BUS SECTIONS F G & H AUTOMATIC TRANSFER	216173
22	SCHEMATIC DIAG MAIN ANNUNCIATOR SH 17 & 18	50037 & 38
23	SINGLE LINE METER & RELAY DIAG 125V DC SYSTEM	437546
24	SCHEMATIC DIAG GEN CONTROL SHEET Nº 3	437559
25	LIST OF EQUIPMENT LOCATION CODE ——— DWG Nº 101900	
26	SOLID STATE PROTECTION SYSTEM MFR DWG REL 663231	
27	FUNCTIONAL DIAGRAMS MFR DWGS REF 663195	
28	SCHEM DIAG. MAIN ANNUNCIATOR SH 26 ——— DWG 512116	
29	SCHEM DIAG SSPS OUTPUT RELAYS TRAIN A ——— DWG 501869	
30	LIST OF ELECTRICAL DEVICES ——— DWG 050024	
31	WIRING DIAGRAM - 4KV SWITCHGEAR BUS "F" . . . DWG. 448574	

NUCLEAR SAFETY RELATED

P.G.&E. SYSTEM PHASE SEQUENCE A-C-B

KEY DWG. SECTION 2

UNIT 1

DATE	
08-14-2012	
D.D.	LCB1
R.E.	RxG2
I.V.	
P.E.	AGB2

REVISION DESCRIPTION: REVISED PER DFT-7*1806

ELECTRICAL
SCHEMATIC DIAGRAM
4160V BUS SECTION "F"
AUTOMATIC TRANSFER

DIABLO CANYON POWER PLANT
PACIFIC GAS AND ELECTRIC COMPANY
SAN FRANCISCO, CALIFORNIA

DWG SCALE:			
BILL OF MATL:			
SUPSDS:			
SUPSD BY:			
DRAWING	SHEET	PAGE	REV
437625	1	0	32

RASTER=437625.dgn
DGN=437625.dgn
CAD User=LCB1 Date: 08-14-2012