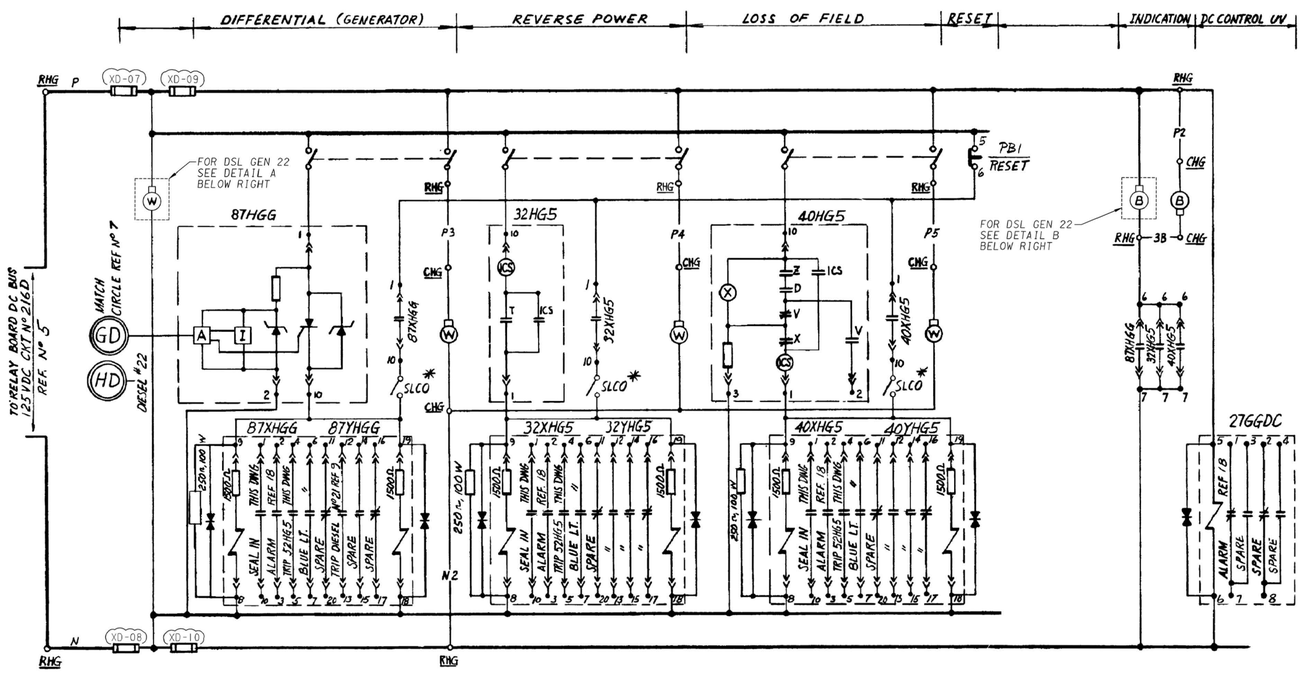

125 V.D.C. CONTROL SCHEMATIC DIAGRAM
DIESEL GENERATOR Nº 21 PROTECTIVE RELAYING CKT. Nº G05H
DIESEL GEN. Nº 22 IS SIMILAR SEE TABLE 1

*- SEAL-IN CUTOUT SWITCH

DETAIL A
125V DC POTENTIAL FOR DIESEL GEN 22

DETAIL B
DIESEL GEN 22 PROTECTIVE RLY INITIATED

CONTACTS		POSITION TRIP RESET	NORMAL AFTER TRIP	NORMAL AFTER CLOSE	CLOSE	REMARKS
1	1C	A			X	THIS DWG.
2	2C	B	X			THIS DWG.
3	3C	C	X		X	SPARE
4	4C	D			X	SPARE
5	5C	E		X	X	SPARE
7	7C	F		X	X	THIS DWG.

CONTROL SWITCH 52HG5 CS & 52HH7 CS AT LOCATIONS 5HG5 & 5HH7

CONTACTS		POSITION TRIP RESET	NEUTRAL AFTER TRIP	NEUTRAL AFTER CLOSE	CLOSE	REMARKS
1	A	X				THIS DWG
2	B		X	X		SPARE
3	C				X	THIS DWG
4	D	X	X			SPARE
5	E			X	X	THIS DWG
6	F	X	X			SPARE
7	G			X	X	SPARE

CONTROL SWITCH 52HG5 CS & 52HH7 CS
AT LOCATIONS CHG & CHH
SPRING RETURN TO NEUTRAL
(W) TYPE W-2 STYLE Nº 5055A638G01)

DECK		CONTACTS		POSITION CONT. RM	INTER.	LOCAL	REMARKS
1	1	11	13	X			THIS DWG.
	2	12	14			X	ALARM, REF 18
	3	15	17	X			THIS DWG.
	4	16	18			X	SPARE
2	5	21	23	X			THIS DWG
	6	22	24			X	THIS DWG
	7	25	27	X			THIS DWG
	8	26	28			X	THIS DWG
3	9	31	33	X			THIS DWG
	10	32	34			X	SPARE
	11	35	37	X			THIS DWG
	12	36	38			X	THIS DWG
4	13	41	43	X			THIS DWG
	14	42	44			X	SPARE
	15	45	47	X			THIS DWG
	16	46	48			X	SPARE
5	17	51	53	X			THIS DWG
	18	52	54			X	SPARE
	19	55	57	X			THIS DWG
	20	56	58			X	SPARE
6	21	61	63	X			THIS DWG.
	22	62	64			X	SPARE
	23	65	67	X			THIS DWG
	24	66	68			X	SPARE
7	25	71	73	X			THIS DWG.
	26	72	74			X	THIS DWG
	27	75	77	X			THIS DWG
	28	76	78			X	THIS DWG.

TRANSFER SWITCH: 43HG5 TS / 43HH7 TS
LOC: 5HG5, 5HH7
ELECTRO SWITCH SERIES 24

TABLE OF DEVICES

DEVICE GEN. 22	DEVICE GEN. 21	FUNCTION	RATING RANGE	MFR	TYPE	CAT. No. OR REF. DWG	REMARKS
4HH7	4HG5	DIESEL AUTO TRANSFER CLOSE RELAY	—	—	—	11, 12, 13	
216HDC	216GDC	DC CONTROL UNDERVOLTAGE RELAY	125V DC	W	SG	1342925	
32HH7	32HG5	DIRECTIONAL POWER RELAY (DIESEL)	—	—	—	4	
32XHH7	32XHG5	AUX. RELAY	125V DC	W	AR	606B028A12	DOUBLE UNIT
32YHH7	32YHG5						
27DCHH7	27DCHG5	CONTROL BUS DC UV RELAY	125VDC	AGASTAT	E6PD		
40HH7	40HG5	DIESEL GENERATOR LOSS OF FIELD RELAY	—	—	—	4	
40XHH7	40XHG5	AUX RELAY	125V DC	W	AR	606B028A12	DOUBLE UNIT
40YHH7	40YHG5						
43HH7/43	43HG7/43	CONTROL TRANSFER SWITCH	125V.DC	ELECTRO SWITCH	24	249078-2	
51HH7	51HG5	DIESEL GENERATOR OVERCURRENT RELAY	—	—	—	4	
51XHH7	51XHG5	AUX. RELAY	24V DC	GE	HFA	12HFA51A46F	
52HH7	52HG5	4KV CIRCUIT BREAKER	—	—	—	3 & 4	
87HHG	87HGG	DIESEL GEN DIFFERENTIAL OC RELAY	—	—	—	4	
87XHHG	87XHGG	AUX. RELAY	125V DC	W	AR	606B028A12	DOUBLE UNIT
87YHHG	87YHGG						
87XHHB	87XHGB	4 KV BUS DIFFERENTIAL OC AUX RELAY	—	—	—	10	
KIC 22	KIC 21	GENERATOR FIELD SHORTING CONTACTOR #1	—	—	—	8	
KIAC 22	KIAC 21	#2	—	—	—	8	
SDR 22	SDR 21	DIESEL SHUT DOWN RELAY	—	—	—	9	
ESR1-22	ESR1-21	ENGINE START RELAY #1 (DIESEL)	—	—	—	8	
ESR2-22	ESR2-21	#2	—	—	—	8	
27DCHH7	27DCHG5	CONTROL BUS DC UV RELAY	125VDC	AGASTAT	GPD		
62HH7	62HG5	BKR CLOSING SPRING TIME DELAY RELAY	125VDC	AGASTAT	ETR		

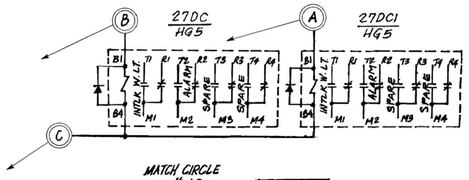

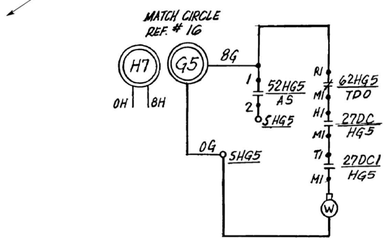

POTENTIAL INTERLOCK

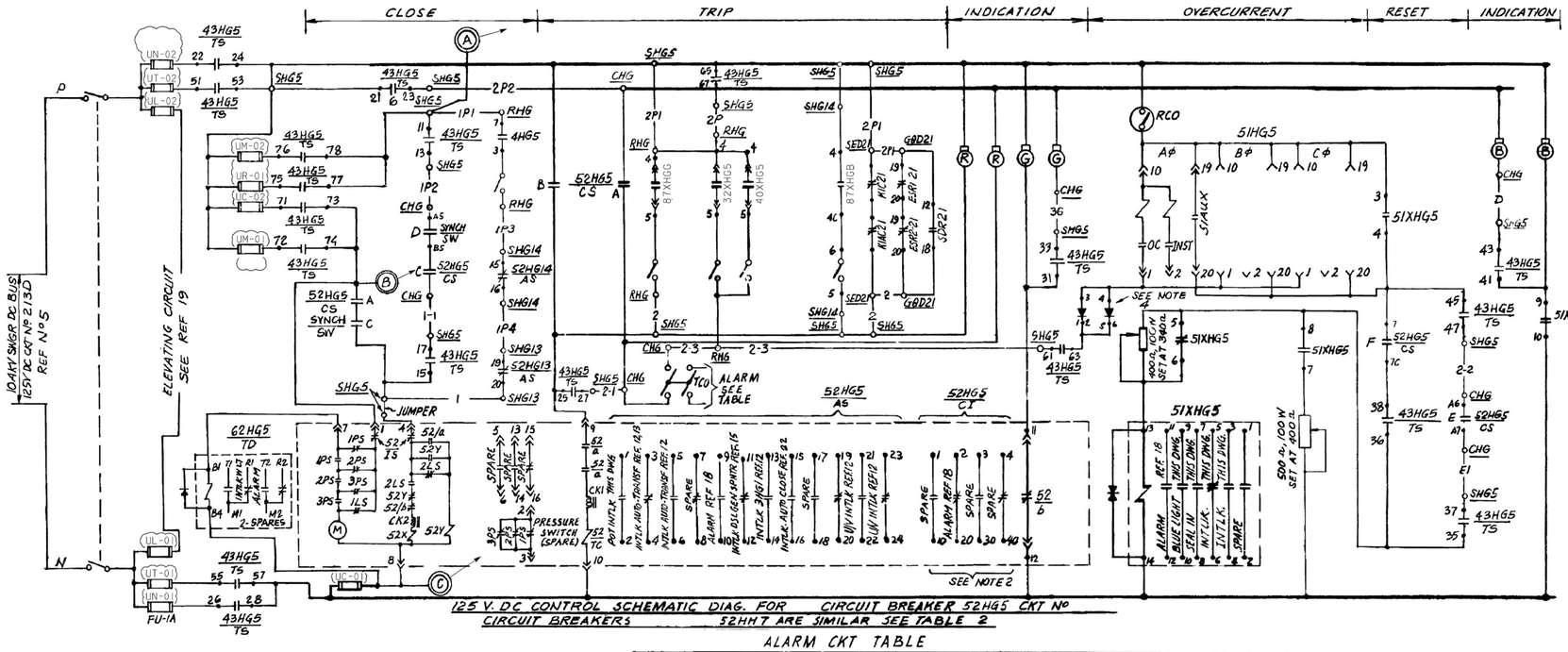

125 V. DC CONTROL SCHEMATIC DIAG. FOR CIRCUIT BREAKER 52HG5 CKT Nº
CIRCUIT BREAKERS 52HH7 ARE SIMILAR SEE TABLE 2

NOTES

2. CELL INTERLOCK SWITCHES ARE SHOWN WITH BREAKER IN OPERATING POSITION.
4. TRIPPING DIODE ASSEMBLY 2.P.G.&E DESIGN STD. 218314
5. FOR DIESEL GEN. 23 ASSOCIATED CIRCUITS REFER TO DWG 49G276 & 49G281.

EQUIPMENT LOCATIONS

CHG	CONTROL BOARD ENG. SAFEGUARD BUS G
RHG	RELAY BOARD ENG SAFEGUARD BUS G
5HG5	SWGR. 4 KV BUS G CUBICLE 5
GGD21	DIESEL GENERATOR Nº 21 GAUGE PANEL
SED21	DIESEL GENERATOR No. 21 EXCITATION CUBICLE
RN50A	RACK NU SAFEGD OUTPUT A
RN50AY	RACK NU SAFEGD OUTPUT A (UNIT 1)

REFERENCES

		DWG Nº 050003
1.	DESCRIPTION OF ELECTRICAL SCHEMATIC DIAG SYMBOLS & CIRCUIT DESIGNATIONS	103013
2.	LIST OF EQUIPMENT LOCATION CODES	441229
3.	SINGLE LINE METER & RELAY DIAG. 4160 V SYSTEM BUS SECT. F	441230
4	G & H	441240
5.	125 V & 250 V DC SYSTEM	437676
6	SCHEMATIC DIAG 4 KV DIESEL GEN & ASSOCIATED CIRCUIT BREAKERS SH 3 (DSL#13 UNIT 1)	441355
7	4 KV DIESEL GEN & ASSOCIATED CIR. BKR'S SH. 1 (DIESEL Nº 21 & 22)	441357
8	4 KV DIESEL GEN CONTROL SH 1	441358
9	2	441343
10	4160 V BUS DIFFERENTIAL SH 2	
11		
12	4160 V BUS SECT G AUTOMATIC TRANSFER (BUS G & H. UNIT Nº 2)	441353
13	H	441354
14		
15	4 KV DIESEL GEN AUXILIARY MOTORS	441359
16	BUS POTENTIAL & SYNCHRONIZING 4160 V SYSTEM SH 2	441340
17		
18	MAIN ANNUNCIATOR SH. 15, 16, 17, 18	500735, 87-88
19	4 KV SWGR MFR DWGS	REC Nº 663860
20	SOLID STATE PROTECTION SYSTEM MFR DWGS REC Nº 663231	
21	FUNCTIONAL DIAGRAM MFR DWGS REC Nº 663195	
22	SCHEMATIC DIAGRAM STAND-BY START-UP TRANSF Nº 22 & ASSOCIATED BREAKERS DWG Nº 441345	
23.		
24.	SCHEM. DIAG. SSPS OUTPUT RELAYS, UNIT 1, TRAIN A DWG. 501869	
25.	SCHEM. DIAG. SSPS OUTPUT RLYS, TRAIN A, TRAIN B 503099, 503093	
26.	SCHEM. DIAG 4KV DSL. GEN. No. 23 & ASSOCIATED CKT. BKR SH 2 #49G276	
27.	P. D. S. CONTROL CIRCUITS SCHEMATIC DIAGRAM, REC. DWG. 6009838-69	

TABLE 1

DIESEL GENERATOR	BUS SECT	CIRCUIT Nº	125 VDC CKT Nº
21	G	G05H	216 D
22	H	H07H	316 D

ALARM CKT TABLE

DIESEL GENERATOR		GENERATOR DIFFERENTIAL	DIRECTIONAL POWER	LOSS OF FIELD	BREAKER OVERCURRENT	DC CONTROL UNDERVOLTAGE	TRANSFER SWITCH	4KV BUS ON DIESEL	TRIP CUTOUT SW ON CUT-IN
21	DEVICE	87XHGG	32XHG5	40XHG5	51XHG5	27GGDC	43HG5/TS	52HG5/AS	TCO
	CKT Nº	AD4301DG	AY4315DG	AY4309DG	AI4302DG	AV4302DG	AY4308DG	AY4314DG	AY4330DG REF. 302092
22	DEVICE	87XHHG	32XHH7	40XHH7	51XHH7	27GHDC	43HH7/TS	52HH7/AS	TCO
	CKT Nº	AD4201DH & AV4209DH	AY4215DH	AY4209DH	AI4202DH	AV4202DH	AY4208DH	AY4214DH	AY4230DH REF. 302092

TABLE 2

GEN Nº	CIRCUIT BKR Nº	CIRCUIT Nº	BUS SECT.	125V.D.C. CKT. Nº	RELAYS AT RELAY BOARD: AUTOMATIC TRANSFER RELAY	CONTACT	LOCATION	DIRECTIONAL PWR RELAY	CONTACT	LOSS OF FIELD RELAY	CONTACT	GEN DIFFERENTIAL RELAY	CONTACT	DIESEL TRIP RELAY	CONTACT	LOCATION
21	52HG5	G05H	G	213D	4HG5	3-7	RHG	32XHG5	4-5	40XHG5	4-5	87XHG6	4-5	—	—	RHG
22	52HH7	H07H	H	313D	4HH7	3-7	RHH	32XHH7	4-5	40XHH7	4-5	87XHHG	4-5	—	—	RHH

GEN Nº	SP HTR BKR AS BKR Nº	CONTACT	LOCATION	BUS DIFFERENTIAL	CONTACT	LOCATION	RELAYS IN DIESEL GENERATOR GAUGE PANEL: ENGINE START RELAY	CONTACT	RELAY	CONTACT	DIESEL SHUT DOWN RELAY	CONTACT	LOCATION	RELAYS IN DSL GEN. EXCITATION CUBICLE: GEN FIELD SHORTING RELAY	CONTACT	RELAY	CONTACT	LOCATION
21	52HG5	11-12	5HG5	87XHG6	4-4C	5HG14	ESR1-21	19-20	ESR2-21	19-20	SDR21	12-18	GGD21	KIC21	KIAC21			SED21
22	52HH7	11-12	5HH7	87XHH6	4-4C	5HH14	ESR1-22	19-20	ESR2-22	19-20	SDR22	12-18	GGD22	KIC22	KIAC22			SED22

P.G.&E. SYSTEM PHASE SEQUENCE A-C-B

NUCLEAR SAFETY RELATED

KEY DWG. SECTION 2

UNIT 2

DATE	1/16/03	DESCRIPTION	COORDINATION	
DWN.	RXO2	Revised per FCT 027082	NUCL.	-
R.E.	HPS2		MECH.	-
INDEP. VERIFIER	-		ELEC.	-
			CIVIL	-
			PIPING	-
P.E.	KBB2		I&C	-

REVISION INFORMATION

ELECTRICAL
SCHEMATIC DIAGRAM
4KV DIESEL GENERATORS AND ASSOCIATED CIRCUIT BREAKERS
DIABLO CANYON POWER PLANT
PACIFIC GAS AND ELECTRIC COMPANY
SAN FRANCISCO, CALIFORNIA

DWG SCALE
BILL OF MATL
SUPSDS
SUPSD BY
SHEET NO. 1 OF
441356 REV 13

REGISTERED PROFESSIONAL ENGINEER KEITH B. BISHOP E 15507 Exp. 6/30/05 ELECTRICAL STATE OF CALIFORNIA

CAD User:PWK2 Date: 9-27-2002
DGN:441356.DGN
RASTER:441356.TIF