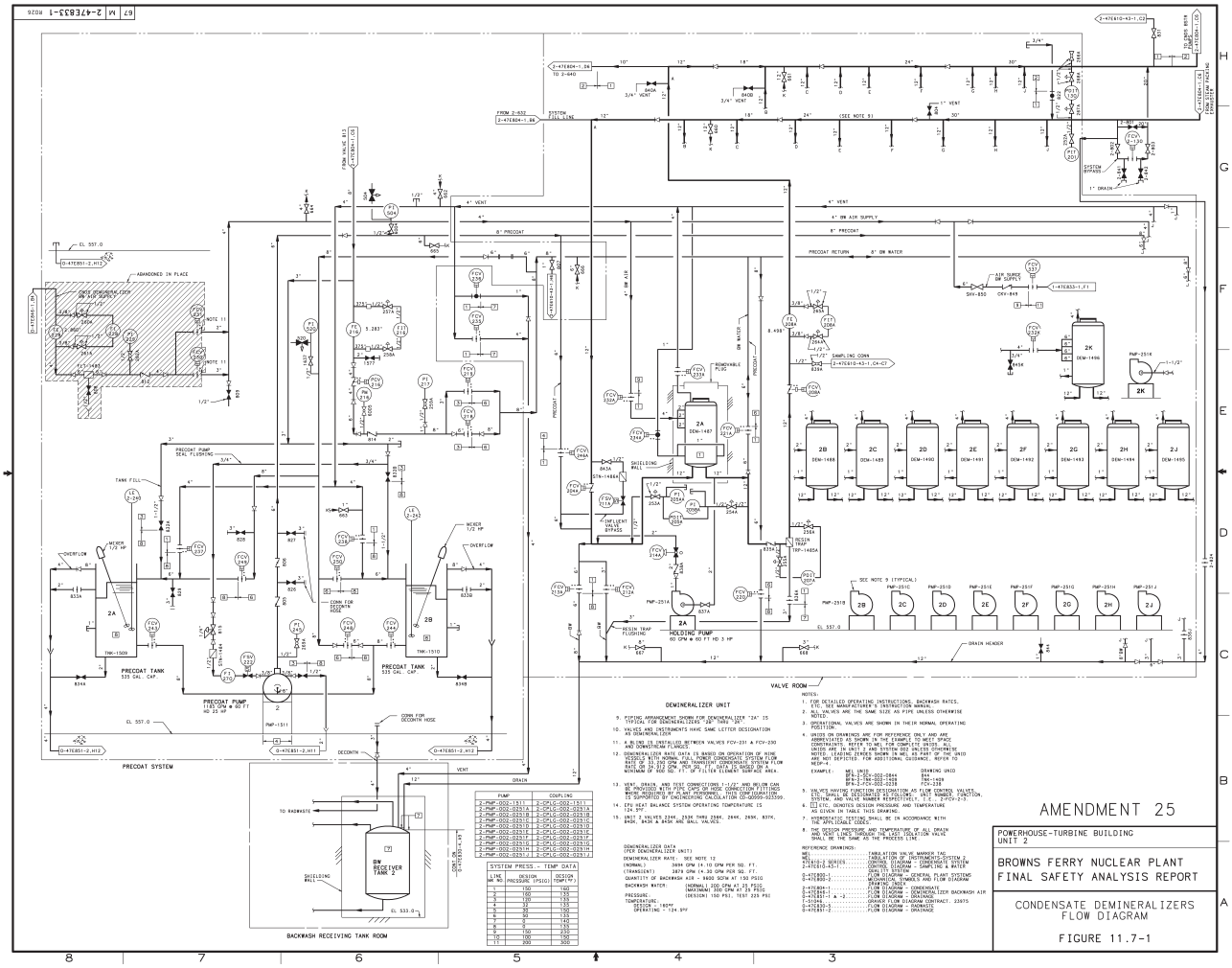
PRECOAT SYSTEM
PRECOAT TANK 535 GAL. CAP.
PRECOAT PUMP 1183 GPM @ 60 FT HD 25 HP
BACKWASH RECEIVING TANK ROOM
BW RECEIVER TANK 2
VALVE ROOM
HOLDING PUMP 60 GPM @ 60 FT HD 3 HP
DEMINERALIZER UNIT
SYSTEM PRESS. - TEMP DATA
AMENDMENT 25
POWERHOUSE-TURBINE BUILDING UNIT 2
BROWNS FERRY NUCLEAR PLANT
FINAL SAFETY ANALYSIS REPORT
CONDENSATE DEMINERALIZERS FLOW DIAGRAM
FIGURE 11.7-1

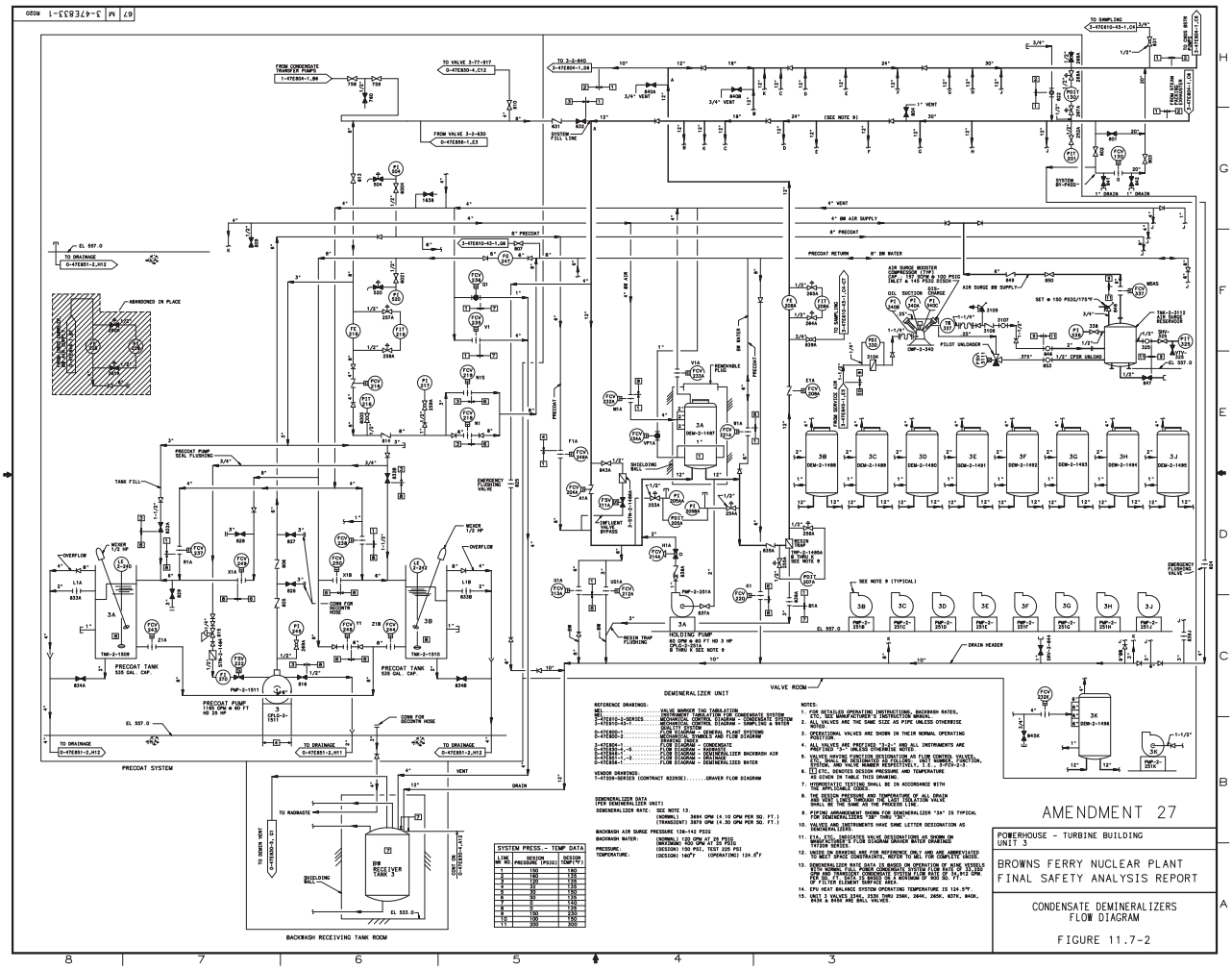
PRECOAT SYSTEM
BACKWASH RECEIVING TANK ROOM
VALVE ROOM
DEMINERALIZER UNIT
SYSTEM PRESS. - TEMP DATA
AMENDMENT 27
POWERHOUSE - TURBINE BUILDING
UNIT 3
BROWNS FERRY NUCLEAR PLANT
FINAL SAFETY ANALYSIS REPORT
CONDENSATE DEMINERALIZERS
FLOW DIAGRAM
FIGURE 11.7-2

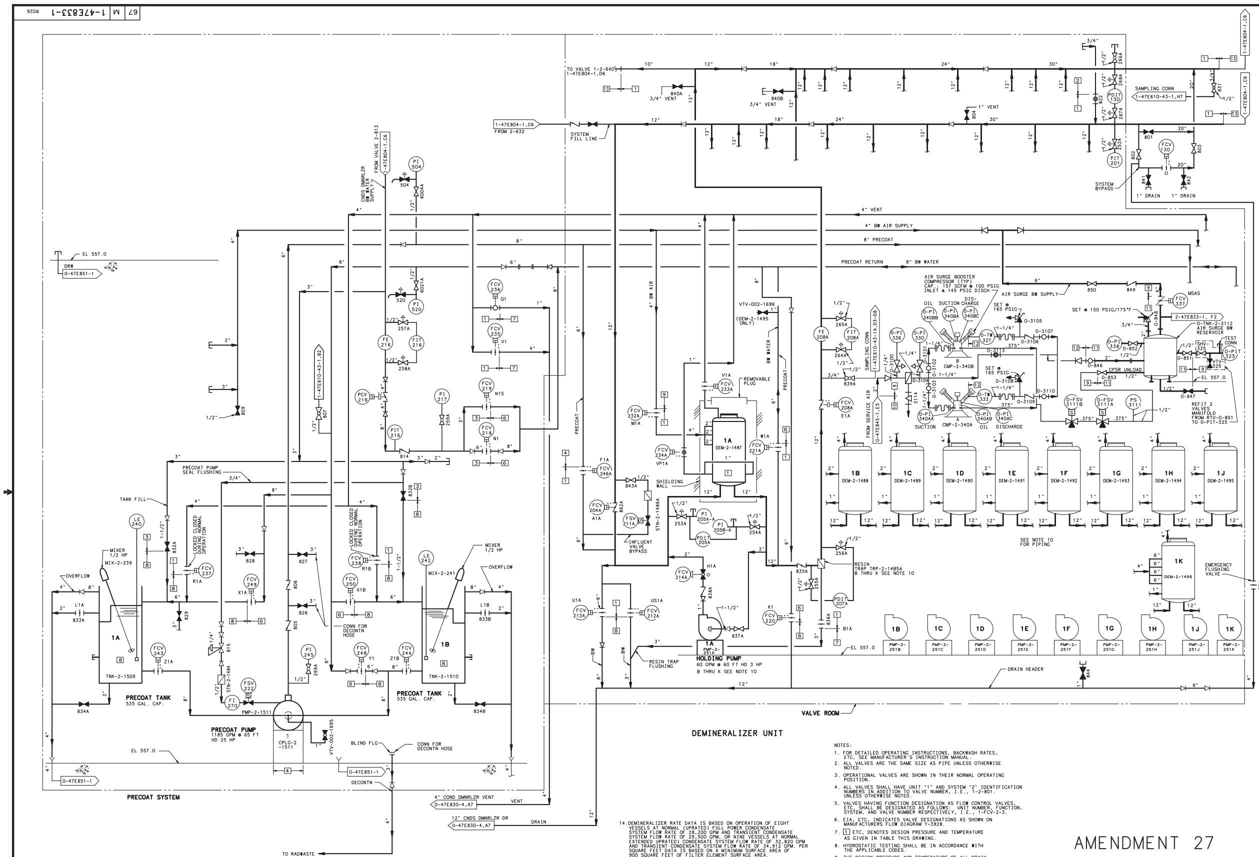


| SYSTEM PRESS.- TEMP DATA | | |
|---|---|---|
| LINE MK NO. | DESIGN PRESSURE (PSIG) | DESIGN TEMP(°F) |
| 1 | 150 | 160 |
| 2 | 160 | 135 |
| 3 | 120 | 135 |
| 4 | 32 | 135 |
| 5 | 30 | 150 |
| 6 | 50 | 135 |
| 7 | 0 | 140 |
| 8 | 0 | 135 |
| 9 | 150 | 230 |
| 10 | 100 | 150 |
| 11 | 200 | 300 |
| 12 | 165 | |
| 13 | 160 | 155 |

14. DEMINERALIZER RATE DATA IS BASED ON OPERATION OF EIGHT VESSELS AT NORMAL (UPRATED) FULL POWER CONDENSATE SYSTEM FLOW RATE OF 28,200 GPM AND TRANSIENT CONDENSATE SYSTEM FLOW RATE OF 29,500 GPM, OR NINE VESSELS AT NORMAL EXTENDED UPRATED) CONDENSATE SYSTEM FLOW RATE OF 32,820 GPM AND TRANSIENT CONDENSATE SYSTEM FLOW RATE OF 34,912 GPM. PER SQUARE FEET DATA IS BASED ON A MINIMUM SURFACE AREA OF 900 SQUARE FEET OF FILTER ELEMENT SURFACE AREA.

DEMINERALIZER DATA
(PER DEMINERALIZER UNIT)

DEMINERALIZER RATE:
NORMAL (UPRATED) - 3520 GPM (3.91 GPM PER SQ FT)
TRANSIENT (UPRATED) - 3690 GPM (4.10 GPM PER SQ FT)
NORMAL (EXTENDED UPRATED) - 3694 GPM (4.10 GPM PER SQ FT)
TRANSIENT (EXTENDED UPRATED) - 3879 GPM (4.30 GPM PER SQ FT)

QUANTITY OF BACKWASH AIR: 9600 SCFM AT 150 PSIG

BACKWASH WATER: NORMAL 200 GPM AT 25 PSIG
MAXIMUM 300 GPM AT 25 PSIG

PRESSURE: (DESIGN) 150 PSI, (TEST) 225 PSI

TEMPERATURE: (DESIGN) 160° F, (OPERATING) 124.5° F

NOTES:

1. FOR DETAILED OPERATING INSTRUCTIONS, BACKWASH RATES, ETC, SEE MANUFACTURER'S INSTRUCTION MANUAL.
2. ALL VALVES ARE THE SAME SIZE AS PIPE UNLESS OTHERWISE NOTED.
3. OPERATIONAL VALVES ARE SHOWN IN THEIR NORMAL OPERATING POSITION.
4. ALL VALVES SHALL HAVE UNIT "1" AND SYSTEM "2" IDENTIFICATION NUMBERS IN ADDITION TO VALVE NUMBER, I.E., 1-2-801. UNLESS OTHERWISE NOTED.
5. VALVES HAVING FUNCTION DESIGNATION AS FLOW CONTROL VALVES, ETC, SHALL BE DESIGNATED AS FOLLOWS: UNIT NUMBER, FUNCTION, SYSTEM, AND VALVE NUMBER RESPECTIVELY, I.E., 1-FCV-2-3.
6. EIA, ETC, INDICATES VALVE DESIGNATIONS AS SHOWN ON MANUFACTURERS FLOW DIAGRAM Y-3928.
7. [1] ETC, DENOTES DESIGN PRESSURE AND TEMPERATURE AS GIVEN IN TABLE THIS DRAWING.
8. HYDROSTATIC TESTING SHALL BE IN ACCORDANCE WITH THE APPLICABLE CODES.
9. THE DESIGN PRESSURE AND TEMPERATURE OF ALL DRAIN AND VENT LINES THROUGH THE LAST ISOLATION VALVE SHALL BE THE SAME AS THE PROCESS LINE.
10. DEMINERALIZER (1B) THRU (1K) PIPING ARRANGEMENT SIMILAR TO DEMINERALIZER (1A).
11. EPU HEAT BALANCE SYSTEM OPERATING TEMPRATURE IS 124.5° F.
12. UNIT 1 VALVES FCV-234K, 253K THRU 256K, 264K, 265K & 843K ARE BALL VALVES.
13. UNIDS ON DRAWING ARE FOR REFERENCE ONLY AND ARE ABBREVIATED TO MEET SPACE CONSTRAINTS. REFER TO MEL FOR COMPLETE UNIDS.

REFERENCE DRAWINGS:

MEL....................TABULATION VALVE MARKER TAG
MEL....................TABULATION OF INSTRUMENTS FOR SYSTEM 2
0-47E610-2-2 & -2A.....CONTROL DIAGRAM - CONDENSATE & DEMINERALIZER WATER STORAGE SYSTEM
0-47E800-1.............FLOW DIAGRAM - GENERAL PLANT SYSTEMS
0-47E800-2.............MECHANICAL SYMBOLS & FLOW DIAGRAM DRAWING INDEX
0-47W550-1.............MECHANICAL CONDENSATE DEMINERALIZERS PIPING AND EQUIPMENT

COMPANION DRAWING:
2-47E833-1
3-47E833-1

AMENDMENT 27

POWERHOUSE-TURBINE BUILDING
UNIT 1

BROWNS FERRY NUCLEAR PLANT
FINAL SAFETY ANALYSIS REPORT

CONDENSATE DEMINERALIZERS
FLOW DIAGRAM

FIGURE 11.7-3