Nuclear Waste Partnership
An Amentum-led partnership with BWXT and Orano

TS:21:03024
UFC:5822.00

October 6, 2021

ATTN: Document Control Desk
Director, Spent Fuel Project Office
Office of Nuclear Material Safety and Safeguards
U.S. Nuclear Regulatory Commission
Washington, DC 20555-0001

Subject: RESPONSE TO REQUEST FOR ADDITIONAL INFORMATION FOR REVISION 25 OF THE TRUPACT-II SHIPPING PACKAGE APPLICATION, DOCKET NO. 71-9218, AND REVISION 8 OF THE HalfPACT SHIPPING PACKAGE APPLICATION, DOCKET NO. 71-9279
(EPIDS L-2021-LLA-0033 AND L-2021-LLA-0034)

References;

1. Letter from T. E. Sellmer to Document Control Desk dated February 23, 2021, subject: Revision 25 of the TRUPACT-II Shipping Package Application, Docket No. 71-9218, and Revision 8 of the HalfPACT Shipping Package Application, Docket No. 71-9279
2. Letter from T. E. Sellmer to Document Control Desk dated June 24, 2021, subject: Amendment to Revision 25 of the TRUPACT-II Shipping Package Application, Docket No. 71-9218, and Revision 8 of the HalfPACT Shipping Package Application, Docket No. 71-9279 (EPIDs L-2021-LLA-0033 AND L-2021-LLA-0034)
3. Letter from N. Garcia Santos to T. E. Sellmer dated August 11, 2021, subject: Application for the Model Nos. TRUPACT-II and HALFPACT Transport Packages – Request for Additional Information (EPIDS L-2021-LLA-0033 AND L-2021-LLA-0034)

Dear Sir or Madam:

Nuclear Waste Partnership LLC, on behalf of the U.S. Department of Energy (DOE), hereby submits an amendment to Revision 25 of the application for a Certificate of Compliance (CoC) for the TRUPACT-II Packaging, U.S. Nuclear Regulatory Commission (NRC) Docket No. 71-9218, and Revision 8 to the application for a CoC for the HalfPACT Packaging, NRC Docket No. 71-9279 (References 1 and 2). This amendment is in response to the Request for Additional Information (Reference 3) and consists of the following documents:

- TRUPACT-II Safety Analysis Report (SAR), Revision 25
- HalfPACT SAR, Revision 8
- Contact-Handled Transuranic Waste Authorized Methods for Payload Control (CH-TRAMPAC), Revision 6
- CH-TRU Payload Appendices, Revision 5.
- HPT-REP-0001, Revision 1
- SCA-CAL-0005, Revision 0

Individual responses to the RAI are provided in Attachment A. All technical changes added in response to the RAI are indicated by right-bars in the margin of the documents ("|") and are summarized in Attachment B. Right-bars in the margin of the documents ("|") indicating technical changes made to the documents in the original submittal and amendment of this application also have been retained. Revised report HPT-REP-0001 R1 and new calculation SCA-CAL-0005 R0 are provided as discussed in the Attachment A RAI responses.

This submission contains files, one or more of which contains hyperlinks to other files or to Internet websites. These hyperlinks are either inoperable or are not essential to the use of the filing. Any material referenced by hyperlinks to Internet websites that was essential for use of this filing has been submitted as part of the filing. Any material referenced by a hyperlink to another file that was essential for the use of this filing has either been included by reference or submitted as part of this filing.

To facilitate implementation, it is requested that the current package CoCs be valid for use one year from the date of issuance of the revised CoCs.

If you have any questions regarding this submittal, please contact Scott Burns of my staff at (575) 706-7920.

Sincerely,

TODD SELLMER (Affiliate)

Digitally signed by TODD SELLMER (Affiliate)
Date: 2021.10.06 07:32:33 -06'00'

T. E. Sellmer, Manager
Packaging and Information Systems

TES:clm

cc: D. Foreman, CBFO
K. E. Princen, CBFO
D. Smith, CBFO
D. L. Standiford, CBFO
M. Toothman, CBFO
J. A. Walker, CBFO
J. Shuler, EM-4.24
J. Shenk, EM-4.24
L. F. Gelder, SRRC
N. Santos Garcia, USNRC
B. H. White, USNRC

The following table summarizes the components of this submittal. No deviations occur from the NRC-prescribed PDF formatting for the submitted files. Please contact Ms. C. L. Morrison at (505) 350-3693 or cindy.morrison@wipp.ws to resolve any discrepancies in this submittal.

File Name	File Size (MB)	Release Level	Submittal Type
001 Transmittal Letter – October 2021.pdf	1.2	Publicly Available	EIE
002 TRUPACT-II SAR R25 – October 2021.pdf	38.5	Publicly Available	EIE
003 HalfPACT SAR R8 – October 2021.pdf	40.3	Publicly Available	EIE
004 CH-TRAMPAC R6 – October 2021.pdf	6.2	Publicly Available	EIE
005 CH-TRU Payload Appendices R5 – October 2021.pdf	50.8	Publicly Available	EIE
006 HPT-REP-0001 R1	86.8	Publicly Available	EIE
007 SCA-CAL-0005 R0	15.1	Publicly Available	EIE

Responses to NRC Request for Additional Information (RAI) on Revision 25 of the TRUPACT-II Safety Analysis Report (SAR), Revision 8 of the HalfPACT SAR, Revision 6 of the Contact-Handled Transuranic Waste Authorized Methods for Payload Control (CH-TRAMPAC), and Revision 5 of the CH-TRU Payload Appendices

STRUCTURAL EVALUATION (St)

RAI-St-1 Pertaining to SC-30G2, SC-30G3, SC-55G1, and SC-55G2, the application states that the SC-30G1 was previously approved based on 4-foot (4-ft) drop tests for normal conditions of transport (NCT) and 30-foot (30-ft) drop tests for hypothetical accident condition (HAC). Provide the following information:

a. Clarify whether the 4-ft drop test was conducted on the SC-55G1 version under NCT. If tests were performed, provide the test results. If the 4-ft drop test was not performed, demonstrate that the SC-55G1 shielded canister meets the 4-ft drop NCT requirement (e.g., show that the 4-ft drop test performed on other shielded canister bounds the SC-55G1 shielded canister or perform the test and provide the results).

   The report HPT-REP-0001, “Regulatory Hypothetical accident Condition Type B testing for the HalfPACT Shielded Container Payload,” Revision 0, page 2, states that 4-ft drop tests were performed for all four new versions of the shielded canisters. On page 2, the report states that the 4-ft drop test and the 30-ft drop test were conducted for the SC-30G3 and the SC-55G1 versions of the canisters for HAC, but other sections of the report (e.g., page 30) do not state that a 4-ft drop test was conducted. Similarly, the report CH-TRU on page 4.9-5 does not state that a 4-ft drop test was conducted for SC55G1.

b. Clarify whether the SC-30G2 was only tested for the 4-ft drop test. Justify why the 4-ft drop tests are an adequate means to demonstrate acceptability of the HAC 30-ft drop tests for the package with the new contents.

   It appears that in the discussion in the report HPT-REP-0001, Section 7.1.4, “SC-30G2 and SC-55G2 Evaluation,” states that the 4-ft drop test was credited to demonstrate acceptable performance of the 30-ft drop test for HAC. However, on Section 5.1.1, “SC-30G2 Payload Assembly vs. SC-55G1 Payload Assembly,” it appears to state that no testing was performed on the SC-30G2 shielded canister.

c. Clarify what is intended by the term “informally” in the report HPT-REP-0001 excerpt. If the term “informally” means that the accelerometer was not calibrated or otherwise qualified for testing, then justify why the comparison of the test results is valid.

> In the report, HPT-REP-0001Section 7.1.1, "SC-30G3 Impact Acceleration Comparison," the applicant stated that "the SC-30G3 will be used for direct comparison of 30-ft protected versus 4-ft unprotected bottom and side drops. Informally [bolded for emphasis], an information only uniaxial accelerometer was installed on SC-30G3 18TU-04 (the test unit used for Type B HAC drop testing)."

Revision 8 of the application for the HalfPACT package references report CH-TRU, "Payload Appendices", Revision 5, and the CH-TRU report references Report HPT-REP-0001. In these reports, the applicant discusses the methodology to qualify the shielded canisters included as part of the amendment request. The applicant refers in various instances to a 4-ft drop test performed for NCT (e.g., Type A tests) that is used to support the qualification of canisters. The applicant also discusses the 30-ft drop tests for HAC (e.g., Type B package tests).

The staff needs this information to determine compliance with the requirements in Title 10 of the Code of Federal Regulations Section 71.71(c) [10 CFR 71.71(c)] and 10 CFR 71.73(c).

Response:

Drop test report HPT-REP-0001, Rev. 0, submitted on February 23, 2021 as attachment 008 used to develop the RAIs has been revised to Rev. 1. The responses below where referenced (RAI-St-1 and RAI-Sh-8) are based on the updated HPT-REP-0001, Rev. 1, attached in the RAI response submittal.

As discussed in Section 1.2 of drop test report HPT-REP-0001, Rev. 1, both DOT-7A Type A 4-foot drop tests and Type B HAC 30-foot drop tests were performed for the previously approved SC-30G1. The DOT-7A Type A 4-foot free drop tests were performed to meet the requirements of 49 CFR §173.465(c). For clarification, these are 4-foot drops of bare (unprotected) shielded containers that are not inside a HalfPACT package with its protective internal dunnage, and not the requisite NCT 3-foot package drops that are performed on the TRUPACT-II and HalfPACT packages per 10 CFR §71.71(c).

a. DOT-7A Type A 4-foot bare (unprotected) free drop tests were performed on all four shielded container designs to meet the requirements of 49 CFR §173.465(c). The HPT-REP-0001 example text (pages 2 and 30) cited by RAI-St-1(a) pertains to the HAC Type B 30-foot package drops. The bare (unprotected) DOT-7A Type A 4-foot drop test results for the SC-55G1 are presented in Section 6.1.2 of HPT-REP-0001, Rev. 1.

b. The SC-30G2 and SC-55G2 were only tested for the bare (unprotected) DOT-7A Type A 4-foot drops. HAC Type B 30-foot drop tests were only performed for the SC-30G3 and SC-55G1 designs because the SC-30G3 and SC-55G1 payload assemblies, and associated packaging dunnage components, are more damaging to the ICV structure than the SC-55G2

and SC-30G2 designs, respectively. Justification for performing the HAC Type B 30-foot drop tests for these bounding designs is provided in Section 5.1 of HPT-REP-0001. For convenience, Table 1 summarizes the tested configurations for the four shielded container designs, and has been added to Section 1.2 of HPT-REP-0001, Rev. 1, for clarity.

Table 1 – Summary of Shielded Container Type A and Type B Testing

Drop Test	Shielded Container Test Unit 18-TUXX[1]			
	SC-30G2	SC-30G3	SC-55G1	SC-55G2
Type A – 4' CG Over Corner	01	03	06	09
Type A – 4' Flat Bottom End	01	03	—	09
Type A – 4' Near-Vertical Lid	02	05	06	10
Type A – 4' Flat Side	02	05	—	10
Type B – 30' Flat Bottom End	—	04	07 & 08	—
Type B – 30' Flat Side	—	04	07 & 08	—

1. "XX" defines the test unit number, e.g., 18-TU01, 18-TU02, etc.

The basis for acceptance of the SC-30G2 and SC-55G2 designs is that physical damage to shielded containers caused by the DOT-7A Type A 4-foot bare drop tests is worse than physical damage to shielded containers caused by HAC Type B 30-foot protected (by foam-filled dunnage) drop tests within the HalfPACT package assembly. Comparison of physical damage to the tested shielded containers from the original SC-30G1 tests as well from the new SC-30G3 and SC-55G1 tests validate this assertion. Therefore, demonstrating that the SC-30G2 and SC-55G2 designs successfully passed the bounding DOT-7A Type A 4-foot drop tests of bare shielded containers ensures that they would also pass the HAC Type B 30-foot drop tests of protected shielded containers within the HalfPACT package. The HAC Type B 30-foot drops demonstrated that the foam-filled dunnage within the bounding payload assembly configurations protected the ICV from internal damage due to the shielded containers.

c. The term "informally" was intended to denote the use of a currently uncertified accelerometer (i.e., the accelerometer's certification was expired, and certifying agencies were not available last summer due to COVID-19 closures). The data collected from the use of the uniaxial accelerometer is not the basis for regulatory compliance. The accelerometer data provides additional evidence that corroborates the documented post-test inspections confirming there was no loss of confinement of fluorescein dye from the payloads and the visual comparison of physical damage to shielded containers subject to bare DOT-7A Type A 4-foot drops and those subject to dunnage-protected HAC 30-foot drops. Section 7.0 of HPT-REP-0001, Rev. 1, has been revised to clarify the use of this information. Accelerometer data supports

what was observed from drop testing, i.e., that bare 4-foot drops were more damaging to the shielded containers than dunnage-protected 30-foot drops.

SHIELDING EVALUATION (Sh)

RAI-Sh-1 Clarify, with justifications, how the uncertainties in the source intensity, source term geometric distribution, and the density correction factors (DFCs) were considered in the calculations of the dose rates and revise the allowable contents as necessary to meet the dose rate limits.

Sections 5.5.6, 5.5.7, 5.5.8, and 5.5.9 of Revision 25 of the TRUPACT-II application provide information on the allowable source intensity, source term geometric distribution, and the DFCs. However, it is not clear whether the uncertainties in these parameters have been considered in determining the maximum allowable activity for each of the containers with the targeted dose rate limit.

The staff needs this information to determine compliance with the requirements in 10 CFR 71.47.

Response:

All calculations used to determine activity limits and density correction factors (DCF) are based on an adjusted dose rate (D_a) that is equal to the Monte Carlo N-Particle (MCNP) calculated dose rate (D_c) plus the tally error (E), i.e., one standard deviation, as follows:

$$D_a = D_c(1+E)$$

To account for uncertainties in the payload activity assay evaluation, Section 3.3.1.1 of the *Contact-Handled Transuranic Waste Authorized Methods for Payload Control* (CH-TRAMPAC) includes the following requirement:

> "Each payload shall be acceptable for shipment only if the determined activity plus the error (i.e., one standard deviation) meets the specific limit as determined by the procedure provided in Section 5.5.10 of the TRUPACT-II SAR."

With reference to Section 5.5.10 of the TRUPACT-II SAR, the default payload configuration from a shielding standpoint conservatively assumes a point source. If, however, a waste form can be shown to meet the requirements for "distributed throughout" from NUREG-1608, then the activity limits for the distributed source model, in conjunction with the appropriate DCF for gamma-emitting radionuclides, may be used; neutron bearing wastes do not utilize a DCF for distributed source models. Uncertainties in the calculated DCFs were considered by conservatively implementing a DCF curve-fit utilizing the minimum DCFs calculated over a range of gamma energies as a function of

source density that utilizes zirconium as a conservative basis for self-shielding material in the distributed source region.

To account for other uncertainties in source intensity and/or source term geometric distribution, Section 5.5.10 of the TRUPACT-II SAR and correspondingly Section 3.3.2.1 of the CH-TRAMPAC apply a 10% administrative margin to the calculated activity limit, where the combined sum of partial fractions for the gamma and neutron source terms present in the package must be less than or equal to 0.9.

RAI-Sh-2 Provide the maximum size of the solid-large objects, for each of the categories of the contents as specified in “Contact-Handled Transuranic Waste Authorized

Methods for Payload Control” (CH-TRAMPAC) (ADAMS Accession No. ML21054A054) Revision 6, (ADAMS Accession No. ML21054A054) and clarify which shielding analyses supports the large objects.

CH-TRAMPAC, Revision 6, Table 2.9-49, Table 2.9-53, Table 2.9-57, and Table 2.9-61 identifies three forms of authorized contents for the SC-30G2, SC-55G1, and SC-55G1 containers. The three forms include the following:

1. solids, any particle size (e.g., fine powder or inorganic particulates),

2. large particle size (e.g., sand, concrete, or debris), and

3. large objects (e.g., metal cans containing waste).

However, it is not clear how to distinguish what constitutes a large object and particle of any size. Also, it is not clear how these definitions of the sizes of the particles or objects are related to the shielding models of distributed or concentrated sources in the package.

The staff needs this information to determine compliance with the requirements in 10 CFR 71.33(b)(3), 10 CFR 71.47, and 10 CFR 71.51.

Response:

Table 2.9-41, Table 2.9-49, Table 2.9-53, Table 2.9-57, and Table 2.9-61 of the CH-TRAMPAC identify material content forms authorized for transport within each of the five shielded container designs (i.e., the currently licensed SC-30G1, and the new SC-30G2, SC-30G3, SC-55G1, and SC-55G2, respectively). Each waste form must be accordingly loaded within a 30-gallon or 55-gallon waste drum.

The term “particle size” is used comparatively in CH-TRAMPAC Section 2.9 to broadly differentiate physical forms as powder/particulate (as present in sludge or solidified waste) or debris; it is not quantitative. The first waste form, “solids, any particle size,” generically refers to relatively uniform solid waste material such as fine powders, ash, oxides, and cements. The second

waste form, “large particle size,” generically refers to non-uniform waste material such as sands, concrete, and random-sized debris. Finally, the third waste form, “large objects,” generically refers to waste material packed within inner metal containers, and may be as large as the 30-gallon or 55-gallon waste drum’s cavity allows. However, as shown in the subsequent paragraph, the precise waste form is generally unimportant from a shielding evaluation standpoint.

Material content forms from Section 2.9 of CH-TRAMPAC are not used in the determination of source term distribution or related in any way to shielding model inputs.

With reference to Section 5.5.10 of the TRUPACT-II SAR, the default payload configuration from a shielding standpoint conservatively assumes a point source; thus, the physical waste form becomes unimportant because source self-shielding is not relevant for gamma-emitting radionuclides, and the container materials of construction make them essentially transparent to neutron-emitting radionuclides. If a payload of containers can be shown to meet the requirements for “distributed throughout” from NUREG-1608, then the activity limits for the distributed source model, in conjunction with the appropriate density correction factor (DCF) for gamma-emitting radionuclides, may be used.

RAI-Sh-3 Explain why the density correction factors (DCFs) for SC-30G3 and SC-55G1 are identical.

The application shows that the equations for the self-shielding factor DCFs of the SC-30G3 and SC-55G1 are identical. Specifically, the application presents these polynomial equations as:

$$DCF_{SC\text{-}30G3} = 0.0051*\rho^3 - 0.0987*\rho^2 + 0.8030*\rho + 0.2342,$$

$$DCF_{SC\text{-}55G1} = 0.0051*\rho^3 - 0.0987*\rho^2 + 0.8030*\rho + 0.2342$$

However, it is not clear why they behave the same since these two containers have different shielding designs and source term limits as shown in Tables 5.5-18 to 5.5-21.

The staff needs this information to determine compliance with the requirements of 10 CFR 71.47 and 10 CFR 71.51.

Response:

As identified by RAI-Sh-3, the DCF equation for the SC-55G1 was incorrect in the application. Section 5.5.8 of the TRUPACT-II SAR has been revised to present the following corrected DCF equation for the SC-55G1.

$$DCF_{SC\text{-}55G1} = 0.0024*\rho^3 - 0.0668*\rho^2 + 0.7557*\rho + 0.2630$$

RAI-Sh-4 Add the steps listed in Section 5.5.10 to the Chapter 7 of the safety analysis report (SAR) as part of the instructions for determining the allowable contents.

Section 5.5.10, "Determination of Acceptable Activity," of the TRUPACT-II SAR provides a list of the steps for determining the allowable quantity of the wastes based on their radioactive characteristics. These steps/instructions form the basis for determining the maximum allowable contents and should be part of the loading instructions.

The staff needs this information to determine compliance with the requirements in 10 CFR 71.33(b)(1), 10 CFR 71.43(f), 10 CFR 71.47, 10 CFR 71.51, and 10 CFR 71.87(a).

Response:

The TRUPACT-II and HalfPACT Certificates of Compliance as well as Section 7.1.4 of the TRUPACT-II and HalfPACT SARs specify the use of the *Contact-Handled Transuranic Waste Authorized Methods for Payload Control* (CH-TRAMPAC) for determining allowable contents. Section 3.3.1.1 of the CH-TRAMPAC includes the following requirement:

> "Each payload shall be acceptable for shipment only if the determined activity plus the error (i.e., one standard deviation) meets the specific limit as determined by the procedure provided in Section 5.5.10 of the TRUPACT-II SAR."

Chapter 7 of the TRUPACT-II and HalfPACT SARs – the procedural instructions for operational loading of a payload assembly into a packaging – specifies that a payload configuration has been properly prepared per the requirements of CH-TRAMPAC. Prior to assembling a payload for loading into a package, Section 6.2.2 of CH-TRAMPAC requires a Transportation Certification Official to comply with Section 3.3 of CH-TRAMPAC. As discussed above, Section 3.3.1.1 of CH-TRAMPAC requires compliance determination as described in Section 5.5.10 of the TRUPACT-II SAR. Therefore, the steps listed in Section 5.5.10 of the TRUPACT-II SAR are included in Chapter 7 of the SARs because Chapter 7 requires compliance with CH-TRAMPAC.

RAI-Sh-5 Demonstrate there are no significant secondary gammas or neutrons from the package or provide control measures to ensure that there will be no significant (n, gamma) or (gamma, n) reactions in the TRU wastes.

Page 5.3-27 of the TRUPACT-II application states the following:

> "Combined photon/neutron mode evaluations were not employed for the neutron analyses as multiple test runs demonstrated that the gamma dose rate due to the interaction of neutrons in the shielding materials contributes a statistically insignificant (<1%) change in the dose rate as compared to the neutron dose rate."

However, it is not clear what the multiple runs were referred to. If the term "run" is related to the MCNP model calculation, the secondary gammas or neutrons in the TRU contents would not be captured in the analyses because the definition of the material in the sample MCNP input, as provided in the application, for the content does not include the TRU isotopes as defined in the Department of Energy's Environmental Impact Statements (DOE 2016). The (n, gamma) and (gamma, n) reactions in the TRU wastes are well understood physical phenomena (McNair, 2019). The MCNP models can only capture the secondary gamma and neutrons when the material compositions for the TRU contents are explicitly defined in the material cards.

The staff needs this information to determine compliance with the requirements in 10 CFR 71.47 and 10 CFR 71.51.

References:

1. Department of Energy, "Final Environmental Impact Statement for the Disposal of Greater-Than-Class C (GTCC) Low-Level Radioactive Waste and GTCC-Like Waste (DOE/EIS-0375)," Department of Energy, January 2016.

2. Carson R McNair, "Characterization techniques for TRU waste from the Analytical Laboratory Hot Cells at Idaho National Laboratory," Idaho National Laboratory, March 2019.

Response:

As correctly stated in RAI-Sh-5, the determination that secondary gamma production from neutrons is statistically insignificant relates only to neutron interaction with the materials of construction for the shielded containers proper. It is asserted that any dose rate increases due to secondary gamma production from neutron interaction with waste material contents is concurrently associated with a more dominant effect of neutron attenuation due to self-shielding (which is not credited for neutrons in either concentrated or distributed waste form activity limits). This assertion was again tested and affirmed via a supplemental series of calculations described below.

To increase neutron capture and corresponding secondary gamma production, the entire shielded container payload cavity was filled with polyethylene with a density of 0.94 g/cc. The SC-30G3 and SC-55G1, which are associated with the greatest and least gamma shielding, respectively, were modeled to encompass the four new shielded container designs.

Two MCNP analyses were run for the SC-30G3 and for the SC-55G1, i.e., NCT and HAC with a concentrated ^{252}Cf neutron source. With the exception of placing polyethylene in the payload cavities and adding photon measurement for the tally regions, the MCNP models are identical to those used to develop Tables 5.4-13 (SC-30G3) and 5.4-14 (SC-55G1) of the TRUPACT-II SAR. For

completeness, the MCNP output files for the four runs are provided in Attachment RAI-Sh-5, and summarized below in Tables 2 and 3 below.

Self-shielding plays a major role in reducing dose rates such that the activity limits calculated in Tables 2 and 3 are significantly greater than the activity limits determined in Tables 5.4-13 and 5.4-14 of the TRUPACT-II SAR for the SC-30G3 and SC-55G1, respectively. Thus, the presence of a material within the shielded container's payload cavity that could stimulate secondary gamma production also serves to provide self-shielding for the neutron source. In summary, accounting for waste material from a neutron to secondary gamma production perspective results in far less restrictive activity limits than what is presented in the SAR.

Table 2 – SC-30G3 NCT & HAC Activity Limits with a Polyethylene Payload

Particle Type	Source Strength (par/s/Ci)	Calculated Dose Rate (mrem/hr / par/s)	Tally Error	Adjusted Dose Rate (mrem/hr / par/s)	Percent of Total Dose Rate	Allowable Dose Rate (mrem/hr)	Allowable Activity (n/s)	Activity Limit (Ci)
NCT - HalfPACT Package Side Surface								
Neutron	3.8322E+09	5.68E-09	0.8%	5.73E-09	95.6%	191.2	3.34E+10	8.716
Gamma	7.3991E+10	2.62E-10	0.9%	2.64E-10	4.4%	8.8	—	—
Total	—	—	—	5.99E-09	100.0%	200.0	—	—
NCT - 2 Meters from HalfPACT Package Side Surface								
Neutron	3.8322E+09	7.15E-10	1.0%	7.22E-10	95.8%	9.6	1.33E+10	3.471
Gamma	7.3991E+10	3.12E-11	1.0%	3.15E-11	4.2%	0.4	—	—
Total	—	—	—	7.54E-10	100.0%	10.0	—	—
HAC - 1 Meter from HalfPACT Package Side Surface								
Neutron	3.8322E+09	5.55E-07	0.2%	5.56E-07	99.4%	994.2	1.79E+09	**0.467**
Gamma	7.3991E+10	3.24E-09	0.6%	3.26E-09	0.6%	5.8	—	—
Total	—	—	—	5.59E-07	100.0%	1,000.0	—	—

Table 3 – SC-55G1 NCT & HAC Activity Limits with a Polyethylene Payload

Particle Type	Source Strength (par/s/Ci)	Calculated Dose Rate (mrem/hr / par/s)	Tally Error	Adjusted Dose Rate (mrem/hr / par/s)	Percent of Total Dose Rate	Allowable Dose Rate (mrem/hr)	Allowable Activity (n/s)	Activity Limit (Ci)
NCT - HalfPACT Package Side Surface								
Neutron	3.8322E+09	5.75E-09	0.8%	5.80E-09	76.8%	153.6	2.65E+10	6.915
Gamma	7.3991E+10	1.75E-09	0.2%	1.75E-09	23.2%	46.4	—	—
Total	—	—	—	7.55E-09	100.0%	200.0	—	—
NCT - 2 Meters from HalfPACT Package Side Surface								
Neutron	3.8322E+09	5.14E-10	1.2%	5.20E-10	73.4%	7.3	1.41E+10	3.679
Gamma	7.3991E+10	1.87E-10	0.3%	1.88E-10	26.6%	2.7	—	—
Total	—	—	—	7.08E-10	100.0%	10.0	—	—
HAC - 1 Meter from HalfPACT Package Side Surface								
Neutron	3.8322E+09	3.83E-07	0.3%	3.84E-07	98.6%	986.4	2.57E+09	**0.671**
Gamma	7.3991E+10	5.28E-09	0.4%	5.30E-09	1.4%	13.6	—	—
Total	—	—	—	3.89E-07	100.0%	1,000.0	—	—

RAI-Sh-6 Clarify whether the uncertainties associated with the source term calculation and the statistical uncertainty associated with the dose rate calculation have been included in the final dose rates. If they are not, include the uncertainties associated with these calculations and demonstrate that the package meets the regulatory requirements.

The applicant used computer code SOURCES-4A to calculate the specific activity of each of the nuclides provided in the document CH-TRAMPAC. However, it is not clear what are the uncertainties, if any, associated with the source term calculations of the transuranic wastes using the SOURCES-4A computer code. The uncertainties of the source term calculations should include, as a minimum, how the transuranic wastes were produced, i.e., irradiation parameters, such as fluxes and spectra, cooling time, and the uncertainties of these parameters.

The applicant developed a scheme to calculate the allowable activity for the SC-30G1 and the four new containers. The scheme determines the maximum allowable contents by dividing the targeted dose rate by the calculated dose rate per curie of each nuclide in the wastes. Table 5.1-8 to Table 5.1-11 of Revision 25 of the TRUPACT-II application provide the targeted maximum dose rates for the Half-PACT packaging system containing the payloads for the four new containers (SC-30G2, SC-30G3, SC-55G1, and SC-55G2) and Table 5.1-7 provides the revised neutron dose rate for neutron sources for the SC-30G1 container. The dose rates in these tables show that the maximum dose rate is less than one percent (e.g., 9.99 mrem/hr vs. 10 mrem/hr for the SC-30G2 container) within the regulatory limits of 10 CFR 71.47, which is 10 mrem/hr. In addition, the data provided in Table 5.4-12, Table 5.4-13, Table 5.4-14, and Table 5.4-15 show that the statistical errors of the Monte Carlo method used in the shielding analyses are in 0.1% to 0.3% for packages under NCT. Based on the MCNP manual, the error associated tally of MCNP calculation is a percentage of the mean value, thus, 0.3% * 9.99 = 0.02997. Considering the statistical error, the actual dose rate could be as high as 9.99+0.02997=10.01997 mrem/hr, which exceeds the regulatory dose rate limit of 10 mrem/hr.

The staff needs this information to determine compliance with the requirements in 10 CFR 71.47.

Response:

The response to RAI-Sh-1 addresses uncertainties associated with source term calculation and the statistical uncertainty associated with the dose rate calculations that are used to determine activity limits.

Per Section 5.2.2 of the TRUPACT-II SAR, the SOURCES-4A computer code was used to generate the neutron source energy spectrum that was used for neutron shielding calculations, and not the specific activities of radionuclides; specific activities are taken from Table 3.1-2 of the CH-TRAMPAC.

As stated earlier, all MCNP shielding calculation results that are used to determine activity limits and density correction factors are based on an adjusted dose rate (D_a) that is equal to the calculated dose rate (D_c) plus the tally error (E), i.e., one standard deviation, as follows:

$$D_a = D_c(1+E)$$

Thus, the tally error is already taken into account for developing the activity limits and is not additive to the dose rates provided in Tables 5.1-8 through 5.1-11 of the TRUPACT-II SAR.

RAI-Sh-7 Justify the assumption for maximizing the distance to the detector for the shielding model for the package under NCT.

On page 5.3-1, the first paragraph the TRUPACT-II SAR states the following:

> "NCT assumptions maximize the distance from the source(s) to the nearest detector whereas HAC assumptions minimize the distance from the source(s) to the nearest detector."

The staff understands the assumption for modeling of the package under HAC. However, it does not understand why the applicant tried to maximize the distance between the source and the detector in the NCT model. This assumption may not be conservative even if the source is homogeneously distributed in the waste.

The staff needs this information to determine compliance with the requirements in 10 CFR 71.47.

Response:

To maximize the distance from the source to the shielded container's surface in all radial directions, the source is located at the shielded container's axial centerline. Given the nature of CH-TRU waste, the expected distribution of waste is such that the average source activity occurs near the center of the payload container. Any potential deviation from its center is captured within the 10% administrative margin that is used to restrict activity limits.

A response to a similar RAI was provided in March 2013 (Letter from T.E. Sellmer to Document Control Desk, dated March 27, 2013, subject: Response to Second Request for Additional Information for Revision 23 of the TRUPACT-II Shipping Package Application, Docket No. 71-9218, TAC No. L24643, and Revision 6 of the HalfPACT Shipping Package Application, Docket NO. 71-9279, TAC NO. L24642). Since the same approved methodology is being implemented for the four new shielded container designs, the previous RAI 5.1 response is still valid.

The calculated allowable activity is administratively reduced 10% to address the potential for reconfiguration of source material within shielded containers

under NCT where the combined sum of partial fractions for gamma and neutron source terms are required to be less than or equal to 0.9. As shown below, potential reconfiguration of the source material in the shielded containers under NCT is highly improbable and will not cause a significant change in the limiting package dose rate values. Other potential sources of dose rate increase under NCT are not applicable for shielded containers due to test results indicating no damage to the payload container under those conditions.

DOE TRU waste packaging guidance and site-specific waste acceptance criteria direct the preparation of CH-TRU waste payload containers to ensure safe and compliant ALARA payload container dose rates during characterization activities, intra-site transport operations, generator site storage, Type B package loading and transport processes, and WIPP repository disposal sequences. By definition, a CH-TRU waste payload container surface dose rate cannot exceed 200 mrem/hr. The CH-TRAMPAC and the WIPP Land Withdrawal Act (Public Law 102-579) impose this payload container surface dose rate requirement. The absence of CH-TRU payload containers exceeding the payload container surface dose rate requirement when surveyed after receipt at WIPP is a strong indicator that dose rate changes during handling and shipment, even at the payload container level, are insignificant. This indicator is important because any change in the payload container surface dose rate translates into a much smaller corresponding change in the limiting 2-meter package dose rate.

Using distance attenuation for the SC-55G1 configuration as an example, where the dose rate is directly proportional to the inverse square of the distance, the limiting dose rate of 10 mrem/hr at a distance 2 meters from the HalfPACT package surface containing two SC-55G1s with initially centered point sources that are unrealistically moved the full radial distance to the SC-55G1's inner shell surface would only increase to $(126.781/114.281)^2 \times 10 = 12.3$ mrem/hr (see Figure 1). Similarly, the limiting dose rate of 10 mrem/hr at a distance 2 meters from the HalfPACT package surface containing one SC-55G2 with an initially centered point source that is unrealistically moved the full radial distance to the SC-55G2's inner shell surface would only increase to $(125.928/113.448)^2 \times 10 = 12.3$ mrem/hr (see Figure 2).

Any substantial concentration of sources resulting from movement during transport would be readily observable during receipt inspection of the package, and none has been noted in thousands of CH-TRU waste shipments within the TRUPACT-II and HalfPACT packages.

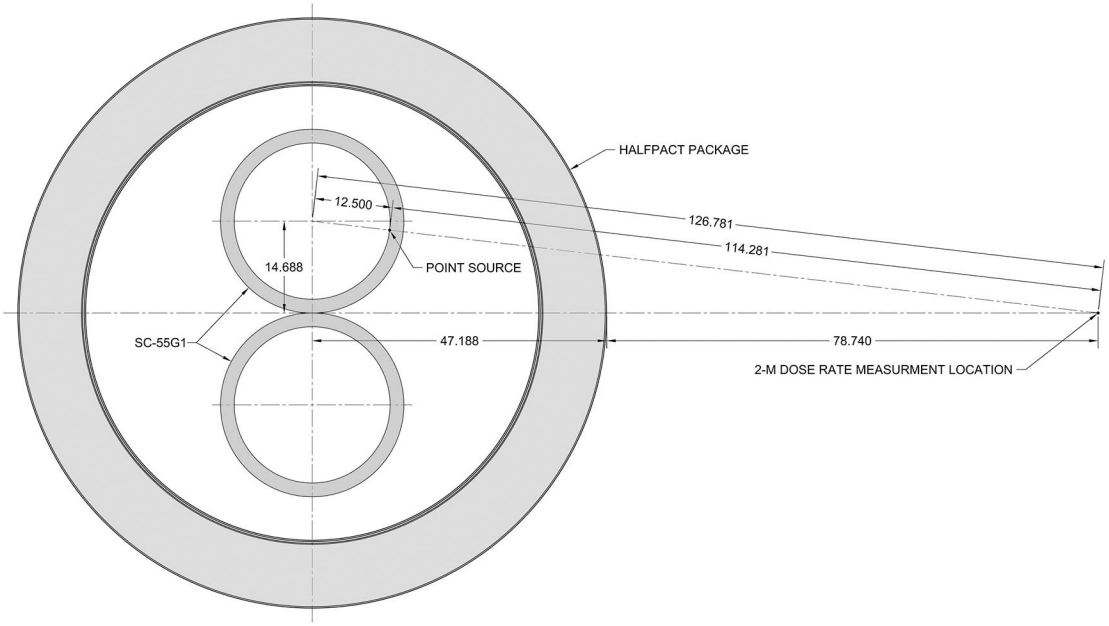

FIGURE 1 – HalfPACT Package with Two SC-55G1s; Shifted Point Source

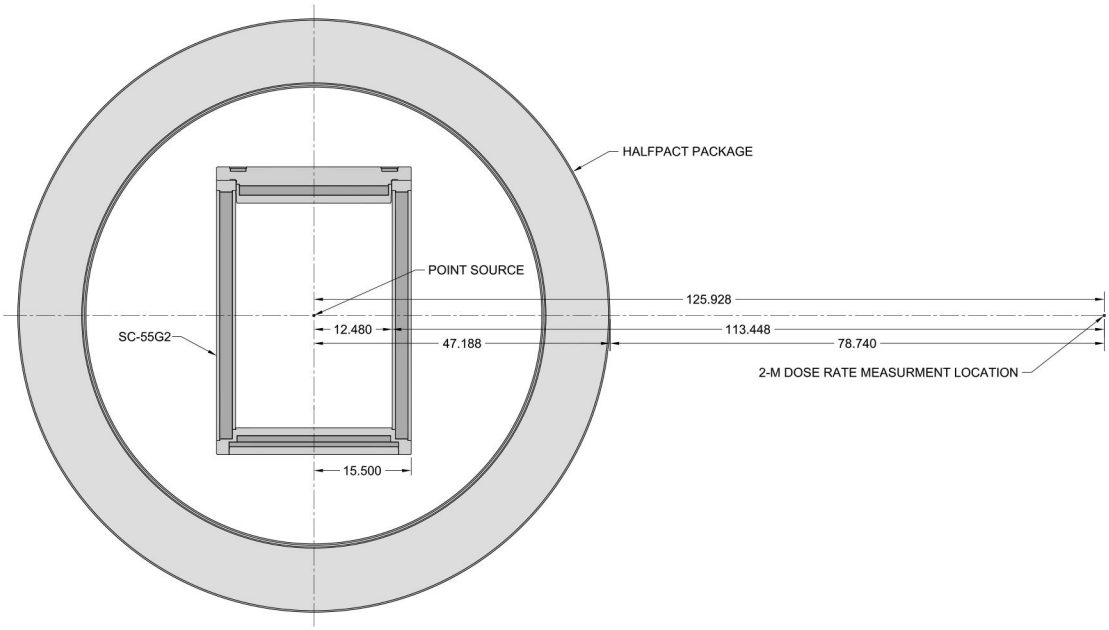

FIGURE 2 – HalfPACT Package with One SC-55G2; Shifted Point Source

Regardless, the occurrence of shielded containers having initially centered sources with full source reconfiguration to the worst possible location under NCT is not considered a credible scenario. Given the nature of CH-TRU waste, the expected distribution of waste is such that the average source activity occurs near the center of the payload container. Any potential deviation from its center is captured within the 10% administrative margin that is used to restrict activity limits.

RAI-Sh-8 Either demonstrate that lead slump does not occur or provide an analysis of the effect of lead slump on the dose rate at one meter for the damaged package.

In the document titled “CH-TRU Payload Appendices,” Revision 5, the applicant stated in the application that no lead slump occurred by examining the lead layer of the testing unit. However, staff does not find the justification for not evaluating lead slump in the application. The staff notes that lead slump under impact is an unavoidable natural phenomenon and will occur in accordance with the basic physics (G. C. Mok, 1989, Tan, et al, 2017) unless the package is designed such that the shielded containers inside the overpack do not experience any significant impact (g-load) under the drop tests required in 10 CFR 71.73(c)(1), which states the following:

> “Free Drop. A free drop of the specimen through a distance of 9 m (30 ft) onto a flat, essentially unyielding, horizontal surface, striking the surface in a position for which maximum damage is expected.”

The staff notes that Figure 4.10-18 – SC-55G2 18TU-10 Cut AM-AN Near Mid-Span shows visible deformation of the lead layer in the middle section of the test unit. The staff also notes that the picture in Figure 7-20 of the document, with document identification number “HPT-REP-0001,” seems to show a void gap at the top end of the lead shield after drop test. These gaps are probable evidence that there will be a loss of lead shield resulting from lead slump. In fact, the gap created by lead slump can be calculated by the differential contraction of the lead layer and the steel shells. If there is not sufficient data to prove lead slump will never occur for this package under HAC, a shielding analysis should be provided assuming there is lead slump under HAC, as predicted using the method in the “Cask Designers Guide” (ORNL, 1970) document. The analysis should also account for any void between the top of the lead shielding and the outer cask top flange resulting from package fabrication. Using analyses for a few radionuclide contents (e.g., Co-60), the applicant may demonstrate that the dose rates for the puncture HAC configuration bound those for the lead slump configuration. In addition, the publication from Sandia National Laboratory, “Dose Estimates in a Loss of Lead Shielding Truck Accident,” clearly indicate that lead slump is a credible condition for transportation package under HAC.

The staff needs this information to determine compliance with the requirements in 10 CFR 71.51.

References:

1. Lawrence Livermore National Laboratory. G. C. Mok, et al., “The Analysis of Lead Slump Effects in Shipping Casks for Radioactive Materials,” March 1989.

2. Tan, Z., Bernal, S.A., and Provis, J.L., “Reproducible mini-slump test procedure for measuring the yield stress of cementitious pastes,” Mater Struct Vol. 50, PP 235, 2017.

3. Oak Ridge National Laboratory. “Cask Designers Guide, A Guide for the Design, Fabrication, and Operation of Shipping Casks for Nuclear Applications,” February 1970.

4. Matthew L. Dennis, Ruth F. Weiner, Douglas M. Osborn, and Terence J. Heames, “Dose estimates in a loss of lead shielding truck accident,” Sandia National Laboratory, August 2009.

Response:

With reference to Figure 7-43 in drop test report HPT-REP-0001, Rev. 1 (Figure 4.10-18 in CH-TRU Payload Appendices), the last paragraph of Section 7.1.3.2 clarifies that the visible deformation at mid-length of SC-55G2 18TU-10 occurred because of a side drop strike on the test rigging’s lifting shackle, not because of lead slump. Therefore, the damage shown in Figure 7-43 at mid-length and Figure 7-34 (not Figure 7-20) at the upper flange end are unrelated.

Axial voids at the ends of the sidewall lead column are shown in HPT-REP-0001, Rev. 1, Figures 6-51 and 6-53 for SC-30G3 18TU-04 that was used for 30-foot HAC drop testing in two orientations (a flat end drop and a flat side drop); Figures 7-18, 7-20, and 7-23 for SC-30G2 18TU-02 that was used for 4-foot Type A drop testing in two orientations (a 10º near-vertical top-down drop and horizontal side drop); and Figure 7-34 for SC-55G2 18TU-09 that was used for bare (unprotected) 4-foot Type A drop testing in two orientations (a center-of-gravity over bottom corner drop and a bottom-down vertical end drop). All axial voids are identified as “cold-shuts” that occurred during the lead pour process. The reasons for this conclusion are summarized below:

1. SC-30G3 18TU-04: The axial void depicted in Figures 6-51 and 6-53 only occurred at the upper step; no void occurred at the lower step. If lead slump had occurred, a void would have been present at both upper and lower steps.

2. SC-30G2 18TU-02: The axial void depicted in Figures 7-18, 7-20, and 7-23 occurred on the second SC-30G2 test unit that was subjected to a 10º near-vertical top-down drop and horizontal side drop. In comparison, SC-30G2 18TU-01 that was subjected to a flat end drop and center-of-gravity-over-corner drop showed no axial void at either end (see Figures 7-13 through 7-16). If lead slump had occurred, SC-30G2 18TU-01 would have exhibited an axial void greater than that observed in SC-30G2 18TU-02.

3. SC-55G2 18TU-09: The axial void depicted in Figure 7-34 occurred on the first SC-55G2 test unit that was subjected to a center-of-gravity over bottom corner drop followed by a flat end drop. The flat end drop should have produced an axisymmetric axial void, yet Figure 7-36 at a cut position 180º from the void shown in Figure 7-34 shows no evidence of lead movement.

Considering all test units, both Type B and Type A, the maximum measured axial void that occurred due to "cold-shuts" was 0.318 inches observed in SC-55G2 18TU-09. To address the effect of axial voids, the SC-30G2, SC-30G3, and SC-55G2 shielding models were modified to include an identical axial gap at both ends of the sidewall lead column; stepped ends included the gap at both steps. This evaluation is included in SCA-CAL-0005, *Effect of Axial Gaps in the SC-30G2, SC30G3, and SC-55G2 Lead Sidewalls* and the results are summarized in new Section 5.4.5, *Evaluation for Axial Gaps in the Sidewall Lead*, of the TRUPACT-II SAR. These models were evaluated for both NCT and HAC.

This evaluation demonstrated that axial gaps as great as 1/2-inch at either the upper or lower end of the sidewall lead column result in a maximum NCT dose rate increase of only 1.01× and a maximum HAC dose rate increase of 1.17×, both associated with the SC-30G2 design (see Table 5.4-16 of the TRUPACT-II SAR). Table 5.4-12 of the TRUPACT-II SAR for the SC-30G2 shows that the HAC activity limit is 9.73× greater than the NCT activity limit. Similarly, Tables 5-4-13 and 5.4-15 of the TRUPACT-II SAR show HAC and NCT activity limit ratios of 3.35× and 4.10× for the SC-30G3 and SC-55G2 designs, respectively. Therefore, the reported increases in HAC dose rates due to 1/2-inch axial gaps are inconsequential because the NCT 2-meter dose rate bounds the activity limits for all shielded container designs.

RAI-Sh-9 Show that the MCNP gamma shielding analysis model for the HalfPACT containing the SC-30G3 container properly converged.

The applicant provided the input file for the MCNP model for the HalfPACT containing the SC-30G3 container. The input model indicates that the applicant set a cut-off computing time of 1200 minutes. However, it is not clear how this cut-off time was determined and whether it can assure a proper convergence of the calculations. One method of showing convergence is providing an output file for the package under NCT. Also, clarify whether the calculations were made on a multiprocessor computer cluster or single processor. For the CTME card, the MCNP 6.2 user's manual (LA-UR-17-29981, Los Alamos National Laboratory, 2017) explicitly points out that it is highly recommended that the NPS card (Section 3.3.7.1.1) should be used to limit the run time for multiprocessor cluster computers.

The staff needs this information to determine compliance with the requirements in 10 CFR 71.47 and 10 CFR 71.51(a)(2).

Response:

While convergence may be used to terminate MCNP calculations for a criticality analysis, it is not applicable for a shielding analysis. A shielding evaluation relies on the results of MCNP's ten statistical checks for determining a problem's validity. A user's model can attain a solution from MCNP that can pass all ten statistical checks, yet have a high tally error (i.e., statistical uncertainty) because a low number of particle histories were evaluated. To reduce the tally error, the user must run a greater number of particle histories, but doing so increases the probability that one or more poorly-behaved particles will cause one or more of the ten statistical checks to fail.

An MCNP run is terminated based on one of two possible methods: 1) controlling computer processor time using the CTME card, or 2) controlling total quantity of particles using the NPS card. Because LANL never corrected MCNP when multi-threading was implemented, computer processor time is semi-arbitrary when running a multi-threading evaluation; hence, the reason the NPS card is recommended, but not required, for use in that situation. Regardless of the method employed to perform an MCNP evaluation and determine the run's cut-off point, however, it is still the responsibility of the user to evaluate results carefully to determine whether sufficient particles have been evaluated to produce an accurate solution.

Although the CTME card was employed for all runs, and all runs were performed using a multi-threading computer, the evaluation goal was to run for sufficient time (i.e., number of particles) to achieve a tally error under one percent. For the SC-30G3 example given, time was increased to 1,200 minutes using a trial-and-error process until the ≤1% tally error goal was achieved. As such, running with the NPS card would not have changed the reported results because the value on the NPS card would have been increased until the same answer with the same tally error goal was achieved.

RAI-Sh-10 Confirm that pre-shipment radiation survey is not relied upon for demonstrating that the package design will meet the regulatory requirement of 10 CFR 71.51(a)(1) and revise the SAR as necessary.

On page 5.3-1, the first paragraph the TRUPACT-II SAR states:

"Any significant deviation from the NCT configuration assumption is precluded through the use of pre-shipment radiological surveys of the package to validate that the source(s) are reasonably distributed within the package."

This statement seems to indicate that assurance of compliance with the regulatory requirement of 10 CFR 71.51(a)(1), "…, no significant increase in external surface radiation levels, and no substantial reduction in the effectiveness of the packaging;.." relies on pre-shipment dose rate measurement. It is not clear how this pre-shipment measurement can assure that the package meets the regulatory requirements of no significant increase

in external surface radiation levels even before a shipment has been made. A pre-shipment dose rate measurement can only assure that the package is fabricated and loaded as designed. It cannot tell any information on the potential source terms reconfiguration or relocation under NCT. Only design analysis can provide such an assurance.

In addition, as explained in Regulatory Issue Summary 2013-04, “Content Specification and Shielding Evaluations for Type B Transportation Packages,” pre-shipment dose rate measurement is a requirement of 10 CFR 71.87, “Routine determinations.” Per 10 CFR 71.35(a), an application for a CoC must include a demonstration that the package satisfies the standards in Subpart E which includes requirements in 10 CFR 71.51.

The staff needs this information to determine compliance with the requirements in 10 CFR 71.35 and 10 CFR 71.51.

Response:

For clarity, Section 5.3.1 of the TRUPACT-II SAR has been revised to delete the last two sentences.

Assurance that the NCT regulatory requirement of 10 CFR §71.51(a)(1) has been met is accomplished via the shielding analyses presented in Chapter 5 of the TRUPACT-II SAR. The responses to RAI-Sh-1 and RAI-Sh-6 address uncertainties in the payload activity assay evaluation. The 10% administrative margin that is applied to the calculated activity limit, where the combined sum of partial fractions for the gamma and neutron source terms present in the package must be less than or equal to 0.9, accounts for all other uncertainties.

Attachment RAI-Sh-5 – MCNP Output Files

1. SC-30G3 NCT Model with ^{252}Cf – Polyethylene with Secondary Gammas

```
         Code Name & Version = MCNP_6.20, 6.2.0

    _/      _/        _/_/_/       _/      _/       _/_/_/        _/_/_/
   _/_/  _/_/      _/             _/_/    _/      _/    _/     _/
  _/  _/  _/      _/             _/  _/  _/      _/_/_/       _/_/_/
 _/      _/      _/             _/    _/_/      _/           _/    _/
_/      _/       _/_/_/       _/      _/       _/            _/_/

 +-----------------------------------------------------------------------+
 | Copyright (2018).  Los Alamos National Security, LLC.  All rights     !
 | reserved.                                                             !
 |  This material was produced under U.S. Government contract            !
 | DE-AC52-06NA25396 for Los Alamos National Laboratory, which is        !
 | operated by Los Alamos National Security, LLC for the U.S.            !
 | Department of Energy. The Government is granted for itself and        !
 | others acting on its behalf a paid-up, nonexclusive, irrevocable      !
 | worldwide license in this material to reproduce, prepare derivative   !
 | works, and perform publicly and display publicly. Beginning five (5)  !
 | years after February 14, 2018, subject to additional five-year        !
 | worldwide renewals, the Government is granted for itself and others   !
 | acting on its behalf a paid-up, nonexclusive, irrevocable worldwide   !
 | license in this material to reproduce, prepare derivative works,      !
 | distribute copies to the public, perform publicly and display         !
 | publicly, and to permit others to do so. NEITHER THE UNITED STATES    !
 | NOR THE UNITED STATES DEPARTMENT OF ENERGY, NOR LOS ALAMOS NATIONAL   !
 | SECURITY, LLC, NOR ANY OF THEIR EMPLOYEES, MAKES ANY WARRANTY,        !
 | EXPRESS OR IMPLIED, OR ASSUMES ANY LEGAL LIABILITY OR RESPONSIBILITY  !
 | FOR THE ACCURACY, COMPLETENESS, OR USEFULNESS OF ANY INFORMATION,     !
 | APPARATUS, PRODUCT, OR PROCESS DISCLOSED, OR REPRESENTS THAT ITS USE  !
 | WOULD NOT INFRINGE PRIVATELY OWNED RIGHTS.                            !
 +-----------------------------------------------------------------------+

1mcnp     version 6     ld=02/20/18                     08/29/21 09:02:49
 ************************************************************************                probid =  08/29/21 09:02:49
 i=NCT_HP_SC-30G3_252Cf_0.i name=NCT_HP_SC-30G3_252Cf_0. tasks 24


  warning.  universe map (print table 128) disabled.

  comment.  Physics models disabled.
        1-       title HP/SC-30G3 with a Concentrated 252Cf Neutron Source - NCT
        2-       c
        3-       c    Universe Fill Boundary
        4-       c
        5-           1    0           -107  108 -109     fill=1     $Shielded Container
        6-                           imp:n=1   imp:p=1   trcl=1
        7-       c
        8-       c    Payload Cell                                  $Material Density 100%
        9-       c
       10-           2    1   -0.9400   -1    2   -3                $Payload
       11-                           imp:n=1   imp:p=1      u=1
       12-       c
       13-       c    Shielded Container Cells                      $Material Density 100%
       14-       c
       15-           3    2   -7.8526  -11   12  -13  -14           $Lower Flange Steel
       16-                            ((11  :13 :-15 :-16)
       17-                             (11  :16 :-17 :-18)
       18-                             (11  :18 :-19 :-20)
       19-                             (11  :20 :-21 :-22)
       20-                            (-12  :26  :27)
       21-                             (23  :24 :-27))
       22-                           imp:n=1   imp:p=1      u=1
       23-           4    3  -11.3500  -23  -24   25                $Lower Flange Upper Lead
       24-                           imp:n=1   imp:p=1      u=1
       25-           5    3  -11.3500  -26  -27   28                $Lower Flange Lower Lead
       26-                           imp:n=1   imp:p=1      u=1
       27-           6    2   -7.8526  (12  -26  -31):              $Lower Flange Base Steel
       28-                            (-29   31  -32)
       29-                           imp:n=1   imp:p=1      u=1
       30-           7    2   -7.8526   16   33  -34  -45           $Inner Shell Steel
       31-                           imp:n=1   imp:p=1      u=1
       32-           8    3  -11.3500 (-16   17   18  -35):         $Sidewall Lead
       33-                             (16   34  -35  -40):
       34-                            (-18   19   20  -35):
```

```
                          (34   40  -43  -45)
                        imp:n=1   imp:p=1      u=1
          9    2   -7.8526   22   36  -37  -45          $Outer Shell Steel
                        imp:n=1   imp:p=1      u=1
         10    2   -7.8526 ((38  -39  -41   45):         $Upper Flange Steel
                          (40   43  -44  -45))
                        ((-38  :41  :42))
                        imp:n=1   imp:p=1      u=1
         11    2   -7.8526  -49   50  -51  -52          $Lid Steel
                         ((39  :41 :-50 :-80)
                         (-41  :63 :-64  :65)
                         (-50  :51 :-65  :83)
                          (51 :-57  :58 :-59)
                         (-53  :54 :-55  :59))
                        imp:n=1   imp:p=1      u=1
         12    2   -7.8526  -50  -80   82   83          $Lid Ring Steel
                          (80 :-81 :-83 :-84)
                        imp:n=1   imp:p=1      u=1
         13    2   -7.8526  -81   86  -87  -89          $Lid Base Steel
                          (81 :-83  :87 :-88)
                        imp:n=1   imp:p=1      u=1
         14    3  -11.3500  -50  -82   85               $Lid Plate Lead
                        imp:n=1   imp:p=1      u=1
         15    3  -11.3500   53  -54   55  -56          $Lid Ring Lead
                        imp:n=1   imp:p=1      u=1
         16    2   -7.8526   59   60  -61  -62          $Lid Ring Cover Plate Steel
                        imp:n=1   imp:p=1      u=1
c
c    Cavity (Void) Cells
c
         17    1   -0.9400 ((13  -33  -86):             $Payload Cavity
                         (-13   15   16  -33):
                         (-33   86   89):
                         (-33   81   84  -89):
                         (-33  -45   80  -84):
                         (-38   42   45   80):
                         (-41  -42   80))
                           (1  :-2   :3)
                        imp:n=1   imp:p=1      u=1
         18    0           -23  -25   27               $Lower Flange Upper Lead
                        imp:n=1   imp:p=1      u=1     $  Axial Cavity
         19    0          (-26  -28   29   31):        $Lower Flange Lower Lead
                          (-28  -29   32)               $  Axial/Radial Cavity
                        imp:n=1   imp:p=1      u=1
         20    0          (-20   21   22  -36):        $Sidewall Lead Outer Radial Gap
                           (20   35  -36  -40):
                          (-36   40   44  -45)
                        imp:n=1   imp:p=1      u=1
         21    0            41  -63   64  -65          $Lid Gasket Recess Cavity
                        imp:n=1   imp:p=1      u=1
         22    0            53  -54   56  -59          $Lid Lead Ring Axial Cavity
                        imp:n=1   imp:p=1      u=1
         23    0          (-82   83  -87   88):        $Lid Lead Plate Axial Cavity
                          (-82  -85   87)
                        imp:n=1   imp:p=1      u=1
         24    0          ((11 :-12  :14  :22)         $Exterior Void
                          (-22  :37  :45)
                          (-45  :49  :51  :52)):
                          ((12  -29  -30):
                          (-51   57  -58   62):
                           (57   59  -60  -62):
                          (-58   59   61  -62))
                        imp:n=1   imp:p=1      u=1
c
c    HalfPACT Package Cells                           $Material Density 100%
c
       201    4   -8.0128 (201 -202  204 -205):        $HalfPACT ICV/OCV Steel Structure
                         (-202  203 -204):
                         (-202  205 -206)
                        imp:n=1   imp:p=1
       202    5   -0.1322 (202  203 -206 -211):        $HalfPACT OCA Polyurethane Foam
                         (-203 -211  214):
                          (206 -211 -215)
                        imp:n=1   imp:p=1
       203    4   -8.0128 (211 -212  214 -215):        $HalfPACT OCA Steel Structure
                         (-212  213 -214):
                         (-212  215 -216)
                        imp:n=1   imp:p=1
c
c    HalfPACT Package Void Cells
c
```

```
116-         204    0          -201  204 -205              $HalfPACT ICV Interior Void
117-                           #1
118-                           imp:n=1   imp:p=1
119-         205    0         ((-999  212  213 -216):       $HalfPACT OCA Exterior Void
120-                           (-999 -213):
121-                           (-999  216))
122-                           (-301 :302:-305 :306)
123-                           (-303 :304:-305 :306)
124-                           imp:n=1   imp:p=1
125-       c
126-       c    HalfPACT Package Surface and 2-meter Tally Cells
127-       c
128-         301    0           301 -302  305 -306          $Package Side Middle @ Surface
129-                           imp:n=1   imp:p=1
130-         302    0           303 -304  305 -306          $Package Side Middle @ 2-meters
131-                           imp:n=1   imp:p=1
132-       c
133-       c    World Cell
134-       c
135-         999    0           999
136-                           imp:n=0   imp:p=0
137-
138-       c
139-       c    Payload Surfaces
140-       c
141-            1        cz   1.27000                    $Radius
142-            2        pz  51.07305                    $Plane, Bottom
143-            3        pz  53.61305                    $Plane, Top
144-       c
145-       c    Shielded Container Lower Flange Surfaces
146-       c
147-           11        cz  35.56000                    $Radius, Outer
148-           12        pz   0.00000                    $Plane, Lower Flange Bottom
149-           13        pz  14.60500                    $Plane, Lower Flange Top
150-           14        kz -35.24250   1.00000    1     $Chamfer, Bottom Outer Corner
151-           15        cz  25.79370                    $Radius, Inner Shell Step
152-           16        pz  13.97000                    $Plane, Inner Shell Step
153-           17        cz  27.19070                    $Radius, Inner Lead Step
154-           18        kz  10.47452  192.3724   -1     $Cone, Inner Lead Step Vertex
155-           19        cz  31.43250                    $Radius, Outer Lead Step
156-           20        pz   5.08000                    $Plane, Outer Lead Step
157-           21        cz  34.23920                    $Radius, Outer Shell Step
158-           22        pz   4.44500                    $Plane, Outer Shell Step
159-           23        cz  25.40000                    $Radius, Upper Lead Plate Recess
160-           24        pz  10.18540                    $Plane, Upper Lead Plate Recess
161-           25        pz   5.74040                    $Plane, Upper Lead Plate Bottom
162-           26        cz  29.21000                    $Radius, Lower Lead Plate Recess
163-           27        pz   5.71500                    $Plane, Lower Lead Plate Recess
164-           28        pz   3.81000                    $Plane, Lower Lead Plate Bottom
165-           29        cz  29.07030                    $Radius, Base Plate
166-           30        pz   0.00000                    $Plane, Base Plate Bottom
167-           31        pz   2.54000                    $Plane, Base Plate Weld Elevation
168-           32        pz   3.81000                    $Plane, Base Plate Top
169-       c
170-       c    Shielded Container Sidewall Inner Shell Surfaces
171-       c
172-           33        cz  25.92070                    $Radius, Inner
173-           34        cz  27.19070                    $Radius, Outer
174-       c
175-       c    Shielded Container Sidewall Lead Shell Surface
176-       c
177-           35        cz  34.17570                    $Radius, Outer
178-       c
179-       c    Shielded Container Sidewall Outer Shell Surfaces
180-       c
181-           36        cz  34.29000                    $Radius, Inner
182-           37        cz  35.56000                    $Radius, Outer
183-       c
184-       c    Shielded Container Upper Flange Surfaces
185-       c
186-           38        cz  25.72385                    $Radius, Inner
187-           39        cz  35.56000                    $Radius, Outer
188-           40        pz  97.15500                    $Plane, Upper Flange Bottom
189-           41        pz 101.91750                    $Plane, Upper Flange Top
190-           42        kz  30.60680   0.13247    1     $Chamfer, Top Inner Corner
191-           43        cz  27.24150                    $Radius, Inner Shell Step
192-           44        cz  34.23920                    $Radius, Outer Shell Step
193-           45        pz  97.79000                    $Plane, Shell Step Top
194-       c
195-       c    Shielded Container Lid Surfaces
196-       c
```

```
197-          49        cz  35.56000                    $Radius, Lid Outer
198-          50        pz 100.34270                     $Plane, Lid Bottom
199-          51        pz 107.32770                     $Plane, Lid Top
200-          52        kz 142.57020   1.00000   -1      $Chamfer, Top Outside Corner
201-          53        cz  22.54250                     $Radius, Lead Ring Recess Inner
202-          54        cz  29.84500                     $Radius, Lead Ring Recess Outer
203-          55        pz 104.91470                     $Plane, Lead Ring Recess Bottom
204-          56        pz 106.81970                     $Plane, Lead Ring Top
205-          57        cz  22.22500                     $Radius, Lead Ring Cover Recess Inner
206-          58        cz  30.16250                     $Radius, Lead Ring Cover Recess Outer
207-          59        pz 106.84510                     $Plane, Lead Ring Cover Recess Bottom
208-          60        cz  22.27580                     $Radius, Lead Ring Cover Inner
209-          61        cz  30.11170                     $Radius, Lead Ring Cover Outer
210-          62        pz 107.29976                     $Plane, Lead Ring Cover Top
211-          63        cz  28.57500                     $Radius, Gasket Recess Outer
212-          64        cz  26.33980                     $Radius, Gasket Recess Inner
213-          65        pz 102.23500                     $Plane, Gasket Recess Top
214-       c
215-       c    Shielded Container Lid Ring Surfaces
216-       c
217-          80        cz  25.66035                     $Radius, Outer Upper
218-          81        cz  25.52700                     $Radius, Outer Lower
219-          82        cz  24.13000                     $Radius, Inner
220-          83        pz  93.28150                     $Plane, Bottom
221-          84        kz  26.24737   0.13247    1      $Cone, Outer Radius Transition
222-          85        pz  94.62770                     $Plane, Lead Plate Bottom
223-       c
224-       c    Shielded Container Lid Base Surfaces
225-       c
226-          86        pz  90.08110                     $Plane, Bottom
227-          87        pz  94.52610                     $Plane, Top
228-          88        cz  24.06650                     $Radius, Lid Ring Step
229-          89        kz  20.58124   0.13247    1      $Chamfer, Bottom Outside Corner
230-       c
231-       c    Shielded Container Universe Fill Boundary Surfaces
232-       c
233-         107       cz   35.56001                    $Radius, Fill Boundary
234-         108       pz   -0.00001                    $Plane, Fill Boundary Bottom
235-         109       pz  107.32771                    $Plane, Fill Boundary Top
236-       c
237-       c    HalfPACT Package ICV/OCV Surfaces
238-       c
239-         201       cz   92.23375                   $Radius, Shell Inner
240-         202       cz   93.34500                   $Radius, Shell Outer
241-         203       pz   22.86000                   $Plane, Lower Head Bottom
242-         204       pz   24.13000                   $Plane, Lower Head Top
243-         205       pz  198.12000                   $Plane, Upper Head Bottom
244-         206       pz  199.39000                   $Plane, Upper Head Top
245-       c
246-       c    HalfPACT Package OCA Surfaces
247-       c
248-         211       cz  118.74500                   $Radius, Shell Inner
249-         212       cz  119.38000                   $Radius, Shell Outer
250-         213       pz    0.00000                   $Plane, Lower Head Bottom
251-         214       pz    0.63500                   $Plane, Lower Head Top
252-         215       pz  229.23500                   $Plane, Upper Head Bottom
253-         216       pz  229.87000                   $Plane, Upper Head Top
254-       c
255-       c    HalfPACT Package Tally Surfaces
256-       c
257-         301       cz  119.38000                   $Radius, Inner (at Surface)
258-         302       cz  119.48000                   $Radius, Outer (at Surface)
259-         303       cz  319.38000                   $Radius, Inner (at 2.000-Meters)
260-         304       cz  319.48000                   $Radius, Outer (at 2.001-Meters)
261-         305       pz  108.58500                   $Plane, Bottom Elevation
262-         306       pz  113.66500                   $Plane, Top Elevation
263-       c
264-       c    World Surface (Problem Boundary)
265-       c
266-         999      sz   114.93500       400
267-
268-       c
269-       c    Physics Cards
270-       c
271-       mode n    p
comment.  photonuclear physics may be needed (phys:p).
272-       c
273-       c    Material Cards
274-       c
275-       m1     1001.84C -0.143704      $Payload (Polyethylene)
276-              1002.84C -0.000033       6000.84C -0.856263
```

```
277-           plib = 84P
278-      c
279-      m2    26054.84C -0.058450      $Carbon Steel
280-            26056.84C -0.917540      26057.84C -0.021190      26058.84C -0.002820
281-           plib = 84P
282-      c
283-      m3    82204.84C -0.014000      $Lead
284-            82206.84C -0.241000      82207.84C -0.221000      82208.84C -0.524000
285-           plib = 84P
286-      c
287-      m4    14028.84C -0.009222      $Stainless Steel (ASTM A240, Type 304)
288-            14029.84C -0.000469      14030.84C -0.000309      24050.84C -0.008256
289-            24052.84C -0.159199      24053.84C -0.018052      24054.84C -0.004494
290-            25055.84C -0.020000      26054.84C -0.039746      26056.84C -0.623927
291-            26057.84C -0.014409      26058.84C -0.001918      28058.84C -0.068077
292-            28060.84C -0.026223      28061.84C -0.001140      28062.84C -0.003635
293-            28064.84C -0.000926
294-           plib = 84P
295-      c
296-      m5     1001.84C -0.069992      $Urethane Foam
297-             1002.84C -0.000008       6000.84C -0.600000       7014.84C -0.079709
298-             7015.84C -0.000291       8016.84C -0.239417       8017.84C -0.000091
299-            14028.84C -0.009222      14029.84C -0.000469      14030.84C -0.000309
300-           plib = 84P
301-      c
302-      c    Specify Universe Transformations
303-      c
304-      *tr1           -53.66386   0.00000 111.12500
305-                      -90   90    0   90    0   90    0   90  -90
306-      c
307-      c    Specify Explicit Analysis for Weight Windows Evaluation
308-      c
309-      cut:n  2j     0
310-      cut:p  2j     0
311-      c
312-      c    Source Cards
313-      c
314-       sdef par=1 axs=1 0 0 erg=d1 pos=d2 rad=d3 ext=d4
315-       sc1  Concentrated 252Cf Neutron Source
316-       si1    L   0.100000  0.500000  1.000000  2.000000  3.000000
317-                  4.000000  6.000000  8.000000 10.000000 15.000000
318-       sp1        0.00E+00  1.80E+11  2.71E+11  5.36E+11  4.10E+11
319-                  2.73E+11  2.66E+11  8.53E+10  2.44E+10  8.36E+09
320-       si2    L  -1.32080   0.00000 111.12500
321-       sp2         1
322-       si3        0.00000   1.27000
323-       sp3   -21    1
324-       si4       -1.27000   1.27000
325-       sp4   -21    0    0
326-      c
327-      c    Package Tally Cards
328-      c
329-      f4:n 301
330-      fc4 Package Surface Neutron Dose Rate (mrem/hr) @ Z = 111.12500
331-      sd4 381.20362
332-      f14:n 302
333-      fc14 2-M from Package Surface Neutron Dose Rate (mrem/hr) @ Z = 111.12500
334-      sd14 1019.57524
335-      f24:p 301
336-      fc24 Package Surface Gamma Dose Rate (mrem/hr) @ Z = 111.12500
337-      sd24 381.20362
338-      f34:p 302
339-      fc34 2-M from Package Surface Gamma Dose Rate (mrem/hr) @ Z = 111.12500
340-      sd34 1019.57524
341-      c
342-      c    ANSI/ANS-6.1.1-1977 Neutron Flux-to-Dose Rate Factor Cards
343-      c
344-      de0    2.50E-08  1.00E-07  1.00E-06  1.00E-05  1.00E-04 $Energy (Mev)
345-             1.00E-03  1.00E-02  1.00E-01  5.00E-01  1.00E+00
346-             2.50E+00  5.00E+00  7.00E+00  1.00E+01  1.40E+01
347-             2.00E+01
348-      df0    3.67E-03  3.67E-03  4.46E-03  4.54E-03  4.18E-03 $Factor (mrem/hr)
349-             3.76E-03  3.56E-03  2.17E-02  9.26E-02  1.32E-01
350-             1.25E-01  1.56E-01  1.47E-01  1.47E-01  2.08E-01
351-             2.27E-01
352-      c
353-      c    ANSI/ANS-6.1.1-1977 Gamma Flux-to-Dose Rate Factor Cards
354-      c
355-      de24       0.01      0.03      0.05      0.07      0.10  $Energy (Mev)
356-                 0.15      0.20      0.25      0.30      0.35
357-                 0.40      0.45      0.50      0.55      0.60
```

```
      358-                0.65      0.70      0.80      1.00      1.40
      359-                1.80      2.20      2.60      2.80      3.25
      360-                3.75      4.25      4.75      5.00      5.25
      361-                5.75      6.25      6.75      7.50      9.00
      362-               11.00     13.00     15.00
      363-      df24   3.96E-03  5.82E-04  2.90E-04  2.58E-04  2.83E-04  $Factor (mrem/hr)
      364-             3.79E-04  5.01E-04  6.31E-04  7.59E-04  8.78E-04
      365-             9.85E-04  1.08E-03  1.17E-03  1.27E-03  1.36E-03
      366-             1.44E-03  1.52E-03  1.68E-03  1.98E-03  2.51E-03
      367-             2.99E-03  3.42E-03  3.82E-03  4.01E-03  4.41E-03
      368-             4.83E-03  5.23E-03  5.60E-03  5.80E-03  6.01E-03
      369-             6.37E-03  6.74E-03  7.11E-03  7.66E-03  8.77E-03
      370-             1.03E-02  1.18E-02  1.33E-02
      371-      de34       0.01      0.03      0.05      0.07      0.10  $Energy (Mev)
      372-                0.15      0.20      0.25      0.30      0.35
      373-                0.40      0.45      0.50      0.55      0.60
      374-                0.65      0.70      0.80      1.00      1.40
      375-                1.80      2.20      2.60      2.80      3.25
      376-                3.75      4.25      4.75      5.00      5.25
      377-                5.75      6.25      6.75      7.50      9.00
      378-               11.00     13.00     15.00
      379-      df34   3.96E-03  5.82E-04  2.90E-04  2.58E-04  2.83E-04  $Factor (mrem/hr)
      380-             3.79E-04  5.01E-04  6.31E-04  7.59E-04  8.78E-04
      381-             9.85E-04  1.08E-03  1.17E-03  1.27E-03  1.36E-03
      382-             1.44E-03  1.52E-03  1.68E-03  1.98E-03  2.51E-03
      383-             2.99E-03  3.42E-03  3.82E-03  4.01E-03  4.41E-03
      384-             4.83E-03  5.23E-03  5.60E-03  5.80E-03  6.01E-03
      385-             6.37E-03  6.74E-03  7.11E-03  7.66E-03  8.77E-03
      386-             1.03E-02  1.18E-02  1.33E-02
      387-      c
      388-      c    Runtime and Print Cards
      389-      c
      390-      prdmp       j    j     1    2
      391-      ctme      1200

 ****************************************************
 * Random Number Generator  =                    1 *
 * Random Number Seed       =       19073486328125 *
 * Random Number Multiplier =       19073486328125 *
 * Random Number Adder      =                    0 *
 * Random Number Bits Used  =                   48 *
 * Random Number Stride     =               152917 *
 ****************************************************


  comment.  total nubar used if fissionable isotopes are present.

 surface       11   and surface       37   are the same.       37   will be deleted.

 surface       11   and surface       39   are the same.       39   will be deleted.

 surface       11   and surface       49   are the same.       49   will be deleted.

 surface       12   and surface       30   are the same.       30   will be deleted.

 surface       12   and surface      213   are the same.      213   will be deleted.

 surface       17   and surface       34   are the same.       34   will be deleted.

 surface       21   and surface       44   are the same.       44   will be deleted.

 surface       28   and surface       32   are the same.       32   will be deleted.

 surface      212   and surface      301   are the same.      301   will be deleted.

  comment.           9 surfaces were deleted for being the same as others.

  warning.    1 materials had unnormalized fractions. print table 40.

  warning.     1 cells appear to consist of more than one piece.
1cells                                                                                                  print table 60

                          atom        gram                                                  neutron    photon     photon wt
            cell      mat  density     density     volume       mass            pieces importance importance generation

       1       1        0  0.00000E+00 0.00000E+00 4.26369E+05 0.00000E+00          1  1.0000E+00 1.0000E+00 -1.000E+00
       2       2        1  1.21080E-01 9.40000E-01 1.28704E+01 1.20981E+01          1  1.0000E+00 1.0000E+00 -1.000E+00
       3       3        2  8.46854E-02 7.85260E+00 2.01423E+04 1.58169E+05          1  1.0000E+00 1.0000E+00 -1.000E+00
       4       4        3  3.29855E-02 1.13500E+01 9.00926E+03 1.02255E+05          1  1.0000E+00 1.0000E+00 -1.000E+00
       5       5        3  3.29855E-02 1.13500E+01 5.10632E+03 5.79567E+04          1  1.0000E+00 1.0000E+00 -1.000E+00
       6       6        2  8.46854E-02 7.85260E+00 1.01802E+04 7.99407E+04          1  1.0000E+00 1.0000E+00 -1.000E+00
```

```
       7        7        2  8.46854E-02 7.85260E+00 1.77619E+04 1.39477E+05          1  1.0000E+00 1.0000E+00 -1.000E+00
       8        8        3  3.29855E-02 1.13500E+01 1.21436E+05 1.37829E+06          1  1.0000E+00 1.0000E+00 -1.000E+00
       9        9        2  8.46854E-02 7.85260E+00 2.60142E+04 2.04279E+05          1  1.0000E+00 1.0000E+00 -1.000E+00
      10       10        2  8.46854E-02 7.85260E+00 8.66283E+03 6.80257E+04          1  1.0000E+00 1.0000E+00 -1.000E+00
      11       11        2  8.46854E-02 7.85260E+00 2.16660E+04 1.70134E+05          1  1.0000E+00 1.0000E+00 -1.000E+00
      12       12        2  8.46854E-02 7.85260E+00 1.61985E+03 1.27201E+04          1  1.0000E+00 1.0000E+00 -1.000E+00
      13       13        2  8.46854E-02 7.85260E+00 8.80459E+03 6.91389E+04          1  1.0000E+00 1.0000E+00 -1.000E+00
      14       14        3  3.29855E-02 1.13500E+01 1.04540E+04 1.18652E+05          1  1.0000E+00 1.0000E+00 -1.000E+00
      15       15        3  3.29855E-02 1.13500E+01 2.28952E+03 2.59860E+04          1  1.0000E+00 1.0000E+00 -1.000E+00
      16       16        2  8.46854E-02 7.85260E+00 5.86345E+02 4.60433E+03          1  1.0000E+00 1.0000E+00 -1.000E+00
      17       17        1  1.21080E-01 9.40000E-01 1.59844E+05 1.50253E+05          1  1.0000E+00 1.0000E+00 -1.000E+00
      18       18        0  0.00000E+00 0.00000E+00 5.14815E+01 0.00000E+00          1  1.0000E+00 1.0000E+00 -1.000E+00
      19       19        0  0.00000E+00 0.00000E+00 3.24842E+01 0.00000E+00          1  1.0000E+00 1.0000E+00 -1.000E+00
      20       20        0  0.00000E+00 0.00000E+00 2.27755E+03 0.00000E+00          1  1.0000E+00 1.0000E+00 -1.000E+00
      21       21        0  0.00000E+00 0.00000E+00 1.22433E+02 0.00000E+00          1  1.0000E+00 1.0000E+00 -1.000E+00
      22       22        0  0.00000E+00 0.00000E+00 3.05269E+01 0.00000E+00          1  1.0000E+00 1.0000E+00 -1.000E+00
      23       23        0  0.00000E+00 0.00000E+00 1.97815E+02 0.00000E+00          1  1.0000E+00 1.0000E+00 -1.000E+00
      24       24        0  0.00000E+00 0.00000E+00 0.00000E+00 0.00000E+00          0  1.0000E+00 1.0000E+00 -1.000E+00
      25      201        4  8.80954E-02 8.01280E+00 1.82252E+05 1.46035E+06          1  1.0000E+00 1.0000E+00 -1.000E+00
      26      202        5  1.11868E-02 1.32200E-01 5.29418E+06 6.99890E+05          1  1.0000E+00 1.0000E+00 -1.000E+00
      27      203        4  8.80954E-02 8.01280E+00 1.65455E+05 1.32576E+06          1  1.0000E+00 1.0000E+00 -1.000E+00
      28      204        0  0.00000E+00 0.00000E+00 0.00000E+00 0.00000E+00          0  1.0000E+00 1.0000E+00 -1.000E+00
      29      205        0  0.00000E+00 0.00000E+00 2.57789E+08 0.00000E+00          2  1.0000E+00 1.0000E+00 -1.000E+00
      30      301        0  0.00000E+00 0.00000E+00 3.81204E+02 0.00000E+00          1  1.0000E+00 1.0000E+00 -1.000E+00
      31      302        0  0.00000E+00 0.00000E+00 1.01958E+03 0.00000E+00          1  1.0000E+00 1.0000E+00 -1.000E+00
      32      999        0  0.00000E+00 0.00000E+00 0.00000E+00 0.00000E+00          0  0.0000E+00 0.0000E+00 -1.000E+00

 total                                              2.64285E+08 6.22590E+06

    minimum source weight = 1.0000E+00    maximum source weight = 1.0000E+00

  comment.  threading will be used when possible in portions of mcnp6.

  comment.  threading will be used for n/p/e table physics.

  comment.  threading will generally not be used for model physics.

        3 warning messages so far.
1cross-section tables                                                                                  print table 100
     XSDIR used: C:\MCNP\MCNP_DATA/xsdir_mcnp6.2

     table    length

                        tables from file xdata/endf71x/H/1001.714nc

   1001.84c   15325  H1 ENDF71x (jlconlin)  Ref. see jlconlin (ref 09/10/2012  10:00:53)         mat 125      12/17/12
                     Energy range:   1.00000E-11  to  2.00000E+01 MeV.
                     particle-production data for deuterons being expunged from   1001.84c
                     temperature = 2.1543E-07 adjusted to 2.5300E-08

                        tables from file xdata/endf71x/H/1002.714nc

   1002.84c    7283  H2 ENDF71x (jlconlin)  Ref. see jlconlin (ref 09/10/2012  10:00:53)         mat 128      12/17/12
                     Energy range:   1.00000E-11  to  1.50000E+02 MeV.
                     particle-production data for protons   being expunged from   1002.84c
                     particle-production data for tritons   being expunged from   1002.84c
                     temperature = 2.1543E-07 adjusted to 2.5300E-08

                        tables from file xdata/endf71x/C/6000.714nc

   6000.84c   55343  C0 ENDF71x (jlconlin)  Ref. see jlconlin (ref 09/10/2012  10:00:53)         mat 600      12/20/12
                     Energy range:   1.00000E-11  to  1.50000E+02 MeV.
                     particle-production data for protons   being expunged from   6000.84c
                     particle-production data for deuterons being expunged from   6000.84c
                     particle-production data for alphas    being expunged from   6000.84c
                     temperature = 2.1543E-07 adjusted to 2.5300E-08

                        tables from file xdata/endf71x/N/7014.714nc

   7014.84c  102640  N14 ENDF71x (jlconlin)  Ref. see jlconlin (ref 09/10/2012  10:00:53)         mat 725      12/16/12
                     Energy range:   1.00000E-11  to  1.50000E+02 MeV.
                     particle-production data for protons   being expunged from   7014.84c
                     particle-production data for deuterons being expunged from   7014.84c
                     particle-production data for alphas    being expunged from   7014.84c
                     temperature = 2.1543E-07 adjusted to 2.5300E-08

                        tables from file xdata/endf71x/N/7015.714nc

   7015.84c   28412  N15 ENDF71x (jlconlin)  Ref. see jlconlin (ref 09/10/2012  10:00:53)         mat 728      12/16/12
                     Energy range:   1.00000E-11  to  2.00000E+01 MeV.
                     temperature = 2.1543E-07 adjusted to 2.5300E-08
```

```
                    tables from file xdata/endf71x/O/8016.714nc

 8016.84c  264772  O16 ENDF71x (jlconlin)  Ref. see jlconlin (ref 09/10/2012  10:00:53)        mat 825      12/13/12
                   Energy range:   1.00000E-11  to  1.50000E+02 MeV.
                   particle-production data for protons   being expunged from   8016.84c
                   particle-production data for deuterons being expunged from   8016.84c
                   particle-production data for tritons   being expunged from   8016.84c
                   particle-production data for alphas    being expunged from   8016.84c
                   temperature = 2.1543E-07 adjusted to 2.5300E-08

                    tables from file xdata/endf71x/O/8017.714nc

 8017.84c    4921  O17 ENDF71x (jlconlin)  Ref. see jlconlin (ref 09/10/2012  10:00:53)        mat 828      12/13/12
                   Energy range:   1.00000E-11  to  2.00000E+01 MeV.
                   temperature = 2.1543E-07 adjusted to 2.5300E-08

warning.    8017.84c lacks gamma-ray production cross sections.

                    tables from file xdata/endf71x/Si/14028.714nc

14028.84c  169896  Si28 ENDF71x (jlconlin)  Ref. see jlconlin (ref 09/10/2012  10:00:53)        mat1425      12/14/12
                   Energy range:   1.00000E-11  to  1.50000E+02 MeV.
                   particle-production data for protons   being expunged from  14028.84c
                   particle-production data for deuterons being expunged from  14028.84c
                   particle-production data for tritons   being expunged from  14028.84c
                   particle-production data for alphas    being expunged from  14028.84c
                   temperature = 2.1543E-07 adjusted to 2.5300E-08

                    tables from file xdata/endf71x/Si/14029.714nc

14029.84c  158834  Si29 ENDF71x (jlconlin)  Ref. see jlconlin (ref 09/10/2012  10:00:53)        mat1428      12/14/12
                   Energy range:   1.00000E-11  to  1.50000E+02 MeV.
                   particle-production data for protons   being expunged from  14029.84c
                   particle-production data for deuterons being expunged from  14029.84c
                   particle-production data for tritons   being expunged from  14029.84c
                   particle-production data for alphas    being expunged from  14029.84c
                   temperature = 2.1543E-07 adjusted to 2.5300E-08

                    tables from file xdata/endf71x/Si/14030.714nc

14030.84c  130018  Si30 ENDF71x (jlconlin)  Ref. see jlconlin (ref 09/10/2012  10:00:53)        mat1431      12/16/12
                   Energy range:   1.00000E-11  to  1.50000E+02 MeV.
                   particle-production data for protons   being expunged from  14030.84c
                   particle-production data for deuterons being expunged from  14030.84c
                   particle-production data for tritons   being expunged from  14030.84c
                   particle-production data for alphas    being expunged from  14030.84c
                   temperature = 2.1543E-07 adjusted to 2.5300E-08

                    tables from file xdata/endf71x/Cr/24050.714nc

24050.84c  291186  Cr50 ENDF71x (jlconlin)  Ref. see jlconlin (ref 09/10/2012  10:00:53)        mat2425      12/13/12
                   Energy range:   1.00000E-11  to  1.50000E+02 MeV.
                   particle-production data for protons   being expunged from  24050.84c
                   particle-production data for deuterons being expunged from  24050.84c
                   particle-production data for tritons   being expunged from  24050.84c
                   particle-production data for alphas    being expunged from  24050.84c
                   temperature = 2.1543E-07 adjusted to 2.5300E-08

                    tables from file xdata/endf71x/Cr/24052.714nc

24052.84c  310582  Cr52 ENDF71x (jlconlin)  Ref. see jlconlin (ref 09/10/2012  10:00:53)        mat2431      12/13/12
                   Energy range:   1.00000E-11  to  1.50000E+02 MeV.
                   particle-production data for protons   being expunged from  24052.84c
                   particle-production data for deuterons being expunged from  24052.84c
                   particle-production data for tritons   being expunged from  24052.84c
                   particle-production data for alphas    being expunged from  24052.84c
                   temperature = 2.1543E-07 adjusted to 2.5300E-08

                    tables from file xdata/endf71x/Cr/24053.714nc

24053.84c  254692  Cr53 ENDF71x (jlconlin)  Ref. see jlconlin (ref 09/10/2012  10:00:53)        mat2434      12/13/12
                   Energy range:   1.00000E-11  to  1.50000E+02 MeV.
                   particle-production data for protons   being expunged from  24053.84c
                   particle-production data for deuterons being expunged from  24053.84c
                   particle-production data for tritons   being expunged from  24053.84c
                   particle-production data for alphas    being expunged from  24053.84c
                   temperature = 2.1543E-07 adjusted to 2.5300E-08

                    tables from file xdata/endf71x/Cr/24054.714nc
```

```
24054.84c  190185  Cr54 ENDF71x (jlconlin)  Ref. see jlconlin (ref 09/10/2012  10:00:53)       mat2437      12/13/12
                   Energy range:   1.00000E-11  to  1.50000E+02 MeV.
                   particle-production data for protons   being expunged from  24054.84c
                   particle-production data for deuterons being expunged from  24054.84c
                   particle-production data for tritons   being expunged from  24054.84c
                   particle-production data for alphas    being expunged from  24054.84c
                   temperature = 2.1543E-07 adjusted to 2.5300E-08

                      tables from file xdata/endf71x/Mn/25055.714nc

25055.84c  455909  Mn55 ENDF71x (jlconlin)  Ref. see jlconlin (ref 09/10/2012  10:00:53)       mat2525      12/18/12
                   Energy range:   1.00000E-11  to  6.00000E+01 MeV.
                   particle-production data for protons   being expunged from  25055.84c
                   particle-production data for deuterons being expunged from  25055.84c
                   particle-production data for tritons   being expunged from  25055.84c
                   particle-production data for helions   being expunged from  25055.84c
                   particle-production data for alphas    being expunged from  25055.84c
                   probability tables used from 1.2500E-01 to 1.0000E+00 mev.
                   temperature = 2.1543E-07 adjusted to 2.5300E-08

                      tables from file xdata/endf71x/Fe/26054.714nc

26054.84c  217705  Fe54 ENDF71x (jlconlin)  Ref. see jlconlin (ref 09/10/2012  10:00:53)       mat2625      12/22/12
                   Energy range:   1.00000E-11  to  1.50000E+02 MeV.
                   particle-production data for protons   being expunged from  26054.84c
                   particle-production data for deuterons being expunged from  26054.84c
                   particle-production data for tritons   being expunged from  26054.84c
                   particle-production data for alphas    being expunged from  26054.84c
                   temperature = 2.1543E-07 adjusted to 2.5300E-08

                      tables from file xdata/endf71x/Fe/26056.714nc

26056.84c  352429  Fe56 ENDF71x (jlconlin)  Ref. see jlconlin (ref 09/10/2012  10:00:53)       mat2631      12/22/12
                   Energy range:   1.00000E-11  to  1.50000E+02 MeV.
                   particle-production data for protons   being expunged from  26056.84c
                   particle-production data for deuterons being expunged from  26056.84c
                   particle-production data for tritons   being expunged from  26056.84c
                   particle-production data for alphas    being expunged from  26056.84c
                   temperature = 2.1543E-07 adjusted to 2.5300E-08

                      tables from file xdata/endf71x/Fe/26057.714nc

26057.84c  241212  Fe57 ENDF71x (jlconlin)  Ref. see jlconlin (ref 09/10/2012  10:00:53)       mat2634      12/22/12
                   Energy range:   1.00000E-11  to  1.50000E+02 MeV.
                   particle-production data for protons   being expunged from  26057.84c
                   particle-production data for deuterons being expunged from  26057.84c
                   particle-production data for tritons   being expunged from  26057.84c
                   particle-production data for alphas    being expunged from  26057.84c
                   temperature = 2.1543E-07 adjusted to 2.5300E-08

                      tables from file xdata/endf71x/Fe/26058.714nc

26058.84c  135502  Fe58 ENDF71x (jlconlin)  Ref. see jlconlin (ref 09/10/2012  10:00:53)       mat2637      12/22/12
                   Energy range:   1.00000E-11  to  2.00000E+01 MeV.
                   particle-production data for protons   being expunged from  26058.84c
                   particle-production data for alphas    being expunged from  26058.84c
                   temperature = 2.1543E-07 adjusted to 2.5300E-08

                      tables from file xdata/endf71x/Ni/28058.714nc

28058.84c  420627  Ni58 ENDF71x (jlconlin)  Ref. see jlconlin (ref 09/10/2012  10:00:53)       mat2825      12/15/12
                   Energy range:   1.00000E-11  to  1.50000E+02 MeV.
                   particle-production data for protons   being expunged from  28058.84c
                   particle-production data for deuterons being expunged from  28058.84c
                   particle-production data for tritons   being expunged from  28058.84c
                   particle-production data for alphas    being expunged from  28058.84c
                   temperature = 2.1543E-07 adjusted to 2.5300E-08

                      tables from file xdata/endf71x/Ni/28060.714nc

28060.84c  344192  Ni60 ENDF71x (jlconlin)  Ref. see jlconlin (ref 09/10/2012  10:00:53)       mat2831      12/17/12
                   Energy range:   1.00000E-11  to  1.50000E+02 MeV.
                   particle-production data for protons   being expunged from  28060.84c
                   particle-production data for deuterons being expunged from  28060.84c
                   particle-production data for tritons   being expunged from  28060.84c
                   particle-production data for alphas    being expunged from  28060.84c
                   temperature = 2.1543E-07 adjusted to 2.5300E-08

                      tables from file xdata/endf71x/Ni/28061.714nc

28061.84c  190713  Ni61 ENDF71x (jlconlin)  Ref. see jlconlin (ref 09/10/2012  10:00:53)       mat2834      12/13/12
```

```
                Energy range:   1.00000E-11  to  1.50000E+02 MeV.
                particle-production data for protons   being expunged from  28061.84c
                particle-production data for deuterons being expunged from  28061.84c
                particle-production data for tritons   being expunged from  28061.84c
                particle-production data for alphas    being expunged from  28061.84c
                temperature = 2.1543E-07 adjusted to 2.5300E-08

                   tables from file xdata/endf71x/Ni/28062.714nc

28062.84c  169202  Ni62 ENDF71x (jlconlin)  Ref. see jlconlin (ref 09/10/2012  10:00:53)       mat2837      12/17/12
                Energy range:   1.00000E-11  to  1.50000E+02 MeV.
                particle-production data for protons   being expunged from  28062.84c
                particle-production data for deuterons being expunged from  28062.84c
                particle-production data for tritons   being expunged from  28062.84c
                particle-production data for alphas    being expunged from  28062.84c
                probability tables used from 6.0000E-01 to 1.0000E+00 mev.
                temperature = 2.1543E-07 adjusted to 2.5300E-08

                   tables from file xdata/endf71x/Ni/28064.714nc

28064.84c  152759  Ni64 ENDF71x (jlconlin)  Ref. see jlconlin (ref 09/10/2012  10:00:53)       mat2843      12/17/12
                Energy range:   1.00000E-11  to  1.50000E+02 MeV.
                particle-production data for protons   being expunged from  28064.84c
                particle-production data for deuterons being expunged from  28064.84c
                particle-production data for tritons   being expunged from  28064.84c
                particle-production data for alphas    being expunged from  28064.84c
                temperature = 2.1543E-07 adjusted to 2.5300E-08

                   tables from file xdata/endf71x/Pb/82204.714nc

82204.84c  392627  Pb204 ENDF71x (jlconlin)  Ref. see jlconlin (ref 09/10/2012  10:00:53)       mat8225      12/22/12
                Energy range:   1.00000E-11  to  2.00000E+02 MeV.
                particle-production data for protons   being expunged from  82204.84c
                particle-production data for deuterons being expunged from  82204.84c
                particle-production data for tritons   being expunged from  82204.84c
                particle-production data for helions   being expunged from  82204.84c
                particle-production data for alphas    being expunged from  82204.84c
                temperature = 2.1543E-07 adjusted to 2.5300E-08

                   tables from file xdata/endf71x/Pb/82206.714nc

82206.84c  801388  Pb206 ENDF71x (jlconlin)  Ref. see jlconlin (ref 09/10/2012  10:00:53)       mat8231      12/22/12
                Energy range:   1.00000E-11  to  2.00000E+02 MeV.
                particle-production data for protons   being expunged from  82206.84c
                particle-production data for deuterons being expunged from  82206.84c
                particle-production data for tritons   being expunged from  82206.84c
                particle-production data for helions   being expunged from  82206.84c
                particle-production data for alphas    being expunged from  82206.84c
                temperature = 2.1543E-07 adjusted to 2.5300E-08

                   tables from file xdata/endf71x/Pb/82207.714nc

82207.84c  353707  Pb207 ENDF71x (jlconlin)  Ref. see jlconlin (ref 09/10/2012  10:00:53)       mat8234      12/22/12
                Energy range:   1.00000E-11  to  2.00000E+02 MeV.
                particle-production data for protons   being expunged from  82207.84c
                particle-production data for deuterons being expunged from  82207.84c
                particle-production data for tritons   being expunged from  82207.84c
                particle-production data for helions   being expunged from  82207.84c
                particle-production data for alphas    being expunged from  82207.84c
                temperature = 2.1543E-07 adjusted to 2.5300E-08

                   tables from file xdata/endf71x/Pb/82208.714nc

82208.84c  317905  Pb208 ENDF71x (jlconlin)  Ref. see jlconlin (ref 09/10/2012  10:00:53)       mat8237      12/22/12
                Energy range:   1.00000E-11  to  1.50000E+02 MeV.
                particle-production data for protons   being expunged from  82208.84c
                particle-production data for deuterons being expunged from  82208.84c
                particle-production data for tritons   being expunged from  82208.84c
                particle-production data for alphas    being expunged from  82208.84c
                temperature = 2.1543E-07 adjusted to 2.5300E-08

                   tables from file xdata/mcplib84

 1000.84p    1974  Update of MCPLIB04 Photon Compton Broadening Data For MCNP5 see LA-UR-    12-00018      01/03/12
                Energy range:   1.00000E-03  to  1.00000E+05 MeV.
 6000.84p    3228  Update of MCPLIB04 Photon Compton Broadening Data For MCNP5 see LA-UR-    12-00018      01/03/12
                Energy range:   1.00000E-03  to  1.00000E+05 MeV.
 7000.84p    3270  Update of MCPLIB04 Photon Compton Broadening Data For MCNP5 see LA-UR-    12-00018      01/03/12
                Energy range:   1.00000E-03  to  1.00000E+05 MeV.
 8000.84p    3348  Update of MCPLIB04 Photon Compton Broadening Data For MCNP5 see LA-UR-    12-00018      01/03/12
                Energy range:   1.00000E-03  to  1.00000E+05 MeV.
```

```
 14000.84p    4868  Update of MCPLIB04 Photon Compton Broadening Data For MCNP5 see LA-UR-    12-00018        01/03/12
                    Energy range:   1.00000E-03  to  1.00000E+05 MeV.
 24000.84p    5758  Update of MCPLIB04 Photon Compton Broadening Data For MCNP5 see LA-UR-    12-00018        01/03/12
                    Energy range:   1.00000E-03  to  1.00000E+05 MeV.
 25000.84p    5674  Update of MCPLIB04 Photon Compton Broadening Data For MCNP5 see LA-UR-    12-00018        01/03/12
                    Energy range:   1.00000E-03  to  1.00000E+05 MeV.
 26000.84p    5794  Update of MCPLIB04 Photon Compton Broadening Data For MCNP5 see LA-UR-    12-00018        01/03/12
                    Energy range:   1.00000E-03  to  1.00000E+05 MeV.
 28000.84p    5902  Update of MCPLIB04 Photon Compton Broadening Data For MCNP5 see LA-UR-    12-00018        01/03/12
                    Energy range:   1.00000E-03  to  1.00000E+05 MeV.
 82000.84p   10086  Update of MCPLIB04 Photon Compton Broadening Data For MCNP5 see LA-UR-    12-00018        01/03/12
                    Energy range:   1.00000E-03  to  1.00000E+05 MeV.

 total     6579868

 comment.  28 cross sections modified by free gas thermal treatment.

maximum photon energy set to    100.0 mev (maximum electron energy)

                     tables from file xdata/el03

  1000.03e    2329                                                                                      6/6/98
                    Energy range:   1.00000E-03  to  1.00000E+03 MeV.
  6000.03e    2333                                                                                      6/6/98
                    Energy range:   1.00000E-03  to  1.00000E+03 MeV.
  7000.03e    2333                                                                                      6/6/98
                    Energy range:   1.00000E-03  to  1.00000E+03 MeV.
  8000.03e    2333                                                                                      6/6/98
                    Energy range:   1.00000E-03  to  1.00000E+03 MeV.
 14000.03e    2339                                                                                      6/6/98
                    Energy range:   1.00000E-03  to  1.00000E+03 MeV.
 24000.03e    2345                                                                                      6/6/98
                    Energy range:   1.00000E-03  to  1.00000E+03 MeV.
 25000.03e    2345                                                                                      6/6/98
                    Energy range:   1.00000E-03  to  1.00000E+03 MeV.
 26000.03e    2345                                                                                      6/6/98
                    Energy range:   1.00000E-03  to  1.00000E+03 MeV.
 28000.03e    2347                                                                                      6/6/98
                    Energy range:   1.00000E-03  to  1.00000E+03 MeV.
 82000.03e    2373                                                                                      6/6/98
                    Energy range:   1.00000E-03  to  1.00000E+03 MeV.

1particles and energy limits                                                                          print table 101

                       particle      maximum       smallest      largest       always        always
                       cutoff        particle      table         table         use table     use model
  particle type        energy        energy        maximum       maximum       below         above

    1  n    neutron     0.0000E+00    1.0000E+36    2.0000E+01    2.0000E+02    1.0000E+36    1.0000E+36
    2  p    photon      1.0000E-03    1.0000E+02    1.0000E+05    1.0000E+05    1.0000E+36    1.0000E+36
    3  e    electron    1.0000E-03    1.0000E+02    1.0000E+02    1.0000E+02    1.0000E+36    1.0000E+36


 warning.  material        2 has been set to a conductor.

 warning.  material        3 has been set to a conductor.

 warning.  material        4 has been set to a conductor.
 comment.  setting up hash-based fast table search for xsec tables

 ------------------------------------------------------------------------------------------
 =====> Set up arrays for hash-based fast table search for xsec data

    number of hash bins   =     8192
    min hash table energy =  1.00000E-11
    max hash table energy =  2.00000E+02

          nuclide      ne      emin        emax     ave_bins  min_bins  max_bins
           1001.84c     590 1.00000E-11 2.00000E+01       0.1       0.0       1.0
           1002.84c     583 1.00000E-11 1.50000E+02       0.1       0.0       2.0
           6000.84c    1328 1.00000E-11 1.50000E+02       0.2       0.0       9.0
           7014.84c    1826 1.00000E-11 1.50000E+02       0.2       0.0      20.0
           7015.84c     939 1.00000E-11 2.00000E+01       0.1       0.0       6.0
           8016.84c    2961 1.00000E-11 1.50000E+02       0.4       0.0      30.0
           8017.84c     620 1.00000E-11 2.00000E+01       0.1       0.0       2.0
          14028.84c    8019 1.00000E-11 1.50000E+02       1.0       0.0     115.0
          14029.84c    4979 1.00000E-11 1.50000E+02       0.6       0.0      85.0
          14030.84c    6089 1.00000E-11 1.50000E+02       0.7       0.0      89.0
          24050.84c   29758 1.00000E-11 1.50000E+02       3.6       0.0     176.0
          24052.84c   30705 1.00000E-11 1.50000E+02       3.7       0.0     214.0
          24053.84c   21659 1.00000E-11 1.50000E+02       2.6       0.0     114.0
```

```
          24054.84c   14261 1.00000E-11 1.50000E+02       1.7       0.0     155.0
          25055.84c   11703 1.00000E-11 6.00000E+01       1.4       0.0      87.0
          26054.84c   18775 1.00000E-11 1.50000E+02       2.3       0.0     156.0
          26056.84c   26742 1.00000E-11 1.50000E+02       3.3       0.0     164.0
          26057.84c   15731 1.00000E-11 1.50000E+02       1.9       0.0     175.0
          26058.84c   10972 1.00000E-11 2.00000E+01       1.3       0.0     106.0
          28058.84c   43443 1.00000E-11 1.50000E+02       5.3       0.0     285.0
          28060.84c   33910 1.00000E-11 1.50000E+02       4.1       0.0     177.0
          28061.84c   11091 1.00000E-11 1.50000E+02       1.4       0.0      96.0
          28062.84c   11345 1.00000E-11 1.50000E+02       1.4       0.0     134.0
          28064.84c   10310 1.00000E-11 1.50000E+02       1.3       0.0     276.0
          82204.84c   11175 1.00000E-11 2.00000E+02       1.4       0.0     108.0
          82206.84c   33882 1.00000E-11 2.00000E+02       4.1       0.0     256.0
          82207.84c   11334 1.00000E-11 2.00000E+02       1.4       0.0     111.0
          82208.84c    7220 1.00000E-11 1.50000E+02       0.9       0.0     112.0

 ------------------------------------------------------------------------------

 ******************************************************************************************************************************

 dump no.    1 on file NCT_HP_SC-30G3_252Cf_0.r     nps =           0     coll =             0     ctm =        0.00
 nrn =                0

        7 warning messages so far.
1problem summary

     run terminated when it had used 1200  minutes of computer time.
+                                                                                                    08/29/21 09:52:54

 =====>     205.55 M histories/hr     (based on wall-clock time in mcrun)


     title HP/SC-30G3 with a Concentrated 252Cf Neutron Source - NCT     probid =  08/29/21 09:02:49

 neutron creation    tracks      weight        energy           neutron loss        tracks      weight        energy
                                 (per source particle)                                        (per source particle)

 source          171447570    1.0000E+00    3.1175E+00         escape             2218146    1.2938E-02    1.7473E-02
 nucl. interaction       0    0.            0.                 energy cutoff            0    0.            0.
 particle decay          0    0.            0.                 time cutoff              0    0.            0.
 weight window           0    0.            0.                 weight window            0    0.            0.
 cell importance         0    0.            0.                 cell importance          0    0.            0.
 weight cutoff           0    0.            0.                 weight cutoff            0    0.            0.
 e or t importance       0    0.            0.                 e or t importance        0    0.            0.
 dxtran                  0    0.            0.                 dxtran                   0    0.            0.
 forced collisions       0    0.            0.                 forced collisions        0    0.            0.
 exp. transform          0    0.            0.                 exp. transform           0    0.            0.
 upscattering            0    0.            1.2297E-06         downscattering           0    0.            3.0708E+00
 photonuclear            0    0.            0.                 capture          169294122    9.8744E-01    2.5583E-02
 (n,xn)             129394    7.5471E-04    1.0222E-03         loss to (n,xn)       64696    3.7735E-04    4.6355E-03
 prompt fission          0    0.            0.                 loss to fission          0    0.            0.
 delayed fission         0    0.            0.                 nucl. interaction        0    0.            0.
 prompt photofis         0    0.            0.                 particle decay           0    0.            0.
 tabular boundary        0    0.            0.                 tabular boundary         0    0.            0.
 tabular sampling        0    0.            0.                 elastic scatter          0    0.            0.
     total       171576964    1.0008E+00    3.1185E+00             total        171576964    1.0008E+00    3.1185E+00

   number of neutrons banked                  64698        average time of (shakes)              cutoffs
   neutron tracks per source particle     1.0008E+00         escape           2.0373E+04          tco   1.0000E+33
   neutron collisions per source particle 1.2235E+02         capture          1.6753E+04          eco   0.0000E+00
   total neutron collisions              20975978939         capture or escape 1.6800E+04         wc1   0.0000E+00
   net multiplication              1.0004E+00 0.0000         any termination   1.6794E+04         wc2   0.0000E+00

 photon creation     tracks      weight        energy           photon loss         tracks      weight        energy
                                 (per source particle)                                        (per source particle)

 source                  0    0.            0.                 escape             2628755    1.5987E-02    2.8402E-02
 nucl. interaction       0    0.            0.                 energy cutoff           11    6.8289E-08    2.4878E-04
 particle decay          0    0.            0.                 time cutoff              0    0.            0.
 weight window           0    0.            0.                 weight window            0    0.            0.
 cell importance         0    0.            0.                 cell importance          0    0.            0.
 weight cutoff           0    0.            0.                 weight cutoff            0    0.            0.
 e or t importance       0    0.            0.                 e or t importance        0    0.            0.
 dxtran                  0    0.            0.                 dxtran                   0    0.            0.
 forced collisions       0    0.            0.                 forced collisions        0    0.            0.
 exp. transform          0    0.            0.                 exp. transform           0    0.            0.
 from neutrons   177752852    1.0395E+00    2.4178E+00         compton scatter          0    0.            1.9557E+00
 bremsstrahlung  200339191    1.1722E+00    6.8769E-02         capture          564406502    3.3013E+00    4.2040E-01
 p-annihilation   22175546    1.2986E-01    6.6359E-02         pair production   11087773    6.4929E-02    1.9237E-01
 photonuclear            0    0.            0.                 photonuclear abs         0    0.            0.
```

```
 electron x-rays          0    0.            0.                loss to photofis         0    0.            0.
 compton fluores          0    0.            0.
 muon capt fluores        0    0.            0.
 1st fluorescence 153987535    9.0089E-01    4.2572E-02
 2nd fluorescence  23867917    1.3965E-01    1.5735E-03
 cerenkov                 0    0.            0.
 (gamma,xgamma)           0    0.            0.
 tabular sampling         0    0.            0.
 prompt photofis          0    0.            0.
     total        578123041    3.3822E+00    2.5971E+00            total        578123041    3.3822E+00    2.5971E+00

   number of photons banked               424135495       average time of (shakes)             cutoffs
   photon tracks per source particle     3.3720E+00         escape           2.9777E+04         tco   1.0000E+33
   photon collisions per source particle 1.0689E+01         capture          1.1985E+04         eco   1.0000E-03
   total photon collisions               1832625563         capture or escape 1.2070E+04        wc1   0.0000E+00
                                                            any termination   1.2169E+04        wc2   0.0000E+00

 computer time so far in this run  1201.19 minutes          maximum number ever in bank       36
 computer time in mcrun            1200.92 minutes          bank overflows to backup file      0
 source particles per minute            1.4276E+05
 random numbers generated             420792660560         most random numbers used was      44705 in history    41959132

 range of sampled source weights = 1.0000E+00 to 1.0000E+00

 number of histories processed by each thread
     7111511     7128881     7129558     7163609     7171458     7169343     7132174     7127869     7152665     7134414
     7151424     7161679     7187632     7133190     7167871     7170197     7167598     7152356     7153966     7099399
     7140547     7113408     7067195     7159626
1neutron  activity in each cell                                                                          print table 126

                tracks      population    collisions    collisions      number       flux        average      average
          cell  entering                                  * weight     weighted    weighted   track weight  track mfp
                                                        (per history)   energy      energy     (relative)      (cm)

      1     1         0           0             0    0.0000E+00  0.0000E+00  0.0000E+00  0.0000E+00  0.0000E+00
      2     2 198133649   171447340     160035752    9.3344E-01  2.2084E-03  2.3253E+00  1.0000E+00  3.0950E+00
      3     3    434888      213847       1319064    7.6937E-03  8.0301E-04  1.0050E+00  1.0000E+00  4.2307E+00
      4     4    145243       77873        292410    1.7055E-03  2.4369E-03  1.0701E+00  1.0000E+00  4.2895E+00
      5     5    127385       67644        118004    6.8828E-04  2.8420E-03  9.4328E-01  1.0000E+00  4.3012E+00
      6     6    101097       72199        276431    1.6123E-03  2.8107E-03  8.6943E-01  1.0000E+00  4.9968E+00
      7     7  14769462     7314174      22951209    1.3387E-01  2.2312E-04  8.0674E-01  1.0000E+00  2.7209E+00
      8     8   8607744     5274740      34178538    1.9935E-01  3.3188E-04  8.8166E-01  1.0000E+00  3.7758E+00
      9     9   4725019     3556812       5755947    3.3573E-02  6.2911E-04  1.0707E+00  1.0000E+00  3.7016E+00
     10    10     94390       61268        249834    1.4572E-03  2.2166E-03  7.0206E-01  1.0000E+00  4.9979E+00
     11    11    152941       95232        549418    3.2046E-03  2.9508E-03  7.4214E-01  1.0000E+00  5.3276E+00
     12    12     66353       38500         72463    4.2265E-04  2.3313E-03  8.4294E-01  1.0000E+00  4.7190E+00
     13    13    305339      164633        994059    5.7980E-03  6.3864E-04  1.0600E+00  1.0000E+00  3.9470E+00
     14    14    138863       72349        345998    2.0181E-03  2.5808E-03  1.0088E+00  1.0000E+00  4.2553E+00
     15    15     33030       24369         27468    1.6021E-04  1.6313E-03  6.0280E-01  1.0000E+00  4.0499E+00
     16    16     27497       22717         11833    6.9018E-05  9.3338E-04  5.4818E-01  1.0000E+00  4.5738E+00
     17    17 202892850   171421599   20716256087    1.2083E+02  6.9990E-05  4.4758E-01  1.0000E+00  9.5472E-01
     18    18    107976       54555             0    0.0000E+00  2.6158E-03  9.8994E-01  1.0000E+00  0.0000E+00
     19    19      6859        5547             0    0.0000E+00  3.4267E-03  7.3205E-01  1.0000E+00  0.0000E+00
     20    20   5669593     3553671             0    0.0000E+00  4.3367E-04  9.4065E-01  1.0000E+00  0.0000E+00
     21    21     12801        9535             0    0.0000E+00  4.9722E-03  6.8307E-01  1.0000E+00  0.0000E+00
     22    22     24214       18552             0    0.0000E+00  1.1603E-03  5.7148E-01  1.0000E+00  0.0000E+00
     23    23    153514       69573             0    0.0000E+00  2.3613E-03  1.1061E+00  1.0000E+00  0.0000E+00
     24    24   3616573     3023203             0    0.0000E+00  5.7887E-04  5.0208E-01  1.0000E+00  0.0000E+00
     25   201   6085358     3024714       7308145    4.2626E-02  6.0129E-04  7.8211E-01  1.0000E+00  2.6453E+00
     26   202   4351129     2800586      23399829    1.3648E-01  3.4088E-04  6.9574E-01  1.0000E+00  1.5881E+01
     27   203   2812747     2428292       1836450    1.0711E-02  6.7767E-04  9.4032E-01  1.0000E+00  2.6264E+00
     28   204   5021934     3024251             0    0.0000E+00  7.3924E-04  1.0096E+00  1.0000E+00  0.0000E+00
     29   205   2236980     2218146             0    0.0000E+00  1.1779E-03  1.2852E+00  1.0000E+00  0.0000E+00
     30   301     39100       39100             0    0.0000E+00  9.8804E-04  1.0633E+00  1.0000E+00  0.0000E+00
     31   302     18393       18393             0    0.0000E+00  9.9483E-04  1.1731E+00  1.0000E+00  0.0000E+00

          total 460912921   380213414   20975978939    1.2235E+02
1photon   activity in each cell                                                                          print table 126

                tracks      population    collisions    collisions      number       flux        average      average
          cell  entering                                  * weight     weighted    weighted   track weight  track mfp
                                                        (per history)   energy      energy     (relative)      (cm)

      1     1         0           0             0    0.0000E+00  0.0000E+00  0.0000E+00  0.0000E+00  0.0000E+00
      2     2   2948644     3779326        436308    2.5450E-03  1.8669E+00  1.8669E+00  1.0000E+00  1.9081E+01
      3     3  12905043    15687878      43060382    2.5137E-01  9.9250E-01  9.9250E-01  1.0009E+00  1.8220E+00
      4     4   2470775     6829420      12709919    7.4270E-02  1.3924E+00  1.3924E+00  1.0017E+00  1.3409E+00
      5     5    301646      718601       1194220    7.0099E-03  1.4225E+00  1.4225E+00  1.0054E+00  1.3624E+00
      6     6    114796      194468        491318    2.9061E-03  1.1693E+00  1.1693E+00  1.0128E+00  1.9379E+00
      7     7 150210736   161269954     240405104    1.4034E+00  1.1485E+00  1.1485E+00  1.0010E+00  1.9332E+00
      8     8  82746569   270845782     513589535    3.0050E+00  1.4961E+00  1.4961E+00  1.0028E+00  1.3986E+00
```

9	9	2590123	4498478	5157380	3.0484E-02	1.6210E+00	1.6210E+00	1.0121E+00	2.2182E+00
10	10	253385	353901	976300	5.7272E-03	1.0730E+00	1.0730E+00	1.0053E+00	1.8871E+00
11	11	229226	374990	1132686	6.6857E-03	1.0969E+00	1.0969E+00	1.0111E+00	1.8614E+00
12	12	609477	652299	1081364	6.3154E-03	9.9201E-01	9.9201E-01	1.0013E+00	1.8524E+00
13	13	12130203	14776858	39342827	2.2963E-01	9.8369E-01	9.8369E-01	1.0007E+00	1.8094E+00
14	14	2322841	6581530	12432876	7.2665E-02	1.3941E+00	1.3941E+00	1.0018E+00	1.3411E+00
15	15	36295	83125	138042	8.2038E-04	1.5113E+00	1.5113E+00	1.0173E+00	1.2340E+00
16	16	13805	16067	9353	5.7268E-05	1.5651E+00	1.5651E+00	1.0452E+00	2.0634E+00
17	17	27644010	189516876	947524648	5.5282E+00	9.9928E-01	9.9928E-01	1.0003E+00	1.3126E+01
18	18	203293	198688	0	0.0000E+00	1.4293E+00	1.4293E+00	1.0041E+00	0.0000E+00
19	19	8177	7448	0	0.0000E+00	1.1690E+00	1.1690E+00	1.0081E+00	0.0000E+00
20	20	3304874	2966609	0	0.0000E+00	1.6304E+00	1.6304E+00	1.0115E+00	0.0000E+00
21	21	32724	29352	0	0.0000E+00	1.0027E+00	1.0027E+00	1.0039E+00	0.0000E+00
22	22	11691	10893	0	0.0000E+00	1.5821E+00	1.5821E+00	1.0419E+00	0.0000E+00
23	23	2513390	2379166	0	0.0000E+00	1.0778E+00	1.0778E+00	1.0010E+00	0.0000E+00
24	24	2791707	2689575	0	0.0000E+00	1.5598E+00	1.5598E+00	1.0599E+00	0.0000E+00
25	201	4047942	5056171	7983354	4.8988E-02	1.6275E+00	1.6275E+00	1.0511E+00	2.0098E+00
26	202	3583293	3320205	1885027	1.1510E-02	1.4544E+00	1.4544E+00	1.0475E+00	1.1616E+02
27	203	3180937	3651603	3074920	1.8850E-02	1.5817E+00	1.5817E+00	1.0496E+00	1.9935E+00
28	204	3731514	3231746	0	0.0000E+00	1.5592E+00	1.5592E+00	1.0327E+00	0.0000E+00
29	205	2649542	2628755	0	0.0000E+00	1.7605E+00	1.7605E+00	1.0441E+00	0.0000E+00
30	301	45822	45822	0	0.0000E+00	1.7723E+00	1.7723E+00	1.0478E+00	0.0000E+00
31	302	20332	20332	0	0.0000E+00	1.7486E+00	1.7486E+00	1.0471E+00	0.0000E+00
	total	323652812	702415918	1832625563	1.0706E+01				

1summary of photons produced in neutron collisions in the tabular range

production by cell of photons created with energies above local photon energy cutoffs

	cell	number of photons	weight per source neut	energy per source neut	avg photon energy	mev/gm per source neut	weight/neut collision	energy/neut collision
1	1	0	0.00000E+00	0.00000E+00	0.00000E+00	0.00000E+00	0.00000E+00	0.00000E+00
2	2	913424	5.32772E-03	1.61699E-02	3.03505E+00	1.33656E-03	5.70762E-03	1.73229E-02
3	3	204043	1.21350E-03	3.92881E-03	3.23759E+00	2.48393E-08	1.57727E-01	5.10654E-01
4	4	22626	1.46897E-04	1.79979E-04	1.22521E+00	1.76010E-09	8.61293E-02	1.05526E-01
5	5	7603	4.91958E-05	6.00596E-05	1.22083E+00	1.03628E-09	7.14764E-02	8.72604E-02
6	6	25875	1.54650E-04	3.74729E-04	2.42308E+00	4.68759E-09	9.59168E-02	2.32414E-01
7	7	4842344	2.85857E-02	1.13600E-01	3.97403E+00	8.14474E-07	2.13537E-01	8.48605E-01
8	8	2401312	1.53410E-02	2.11210E-02	1.37677E+00	1.53240E-08	7.69541E-02	1.05948E-01
9	9	1043625	6.17422E-03	2.08328E-02	3.37416E+00	1.01982E-07	1.83906E-01	6.20529E-01
10	10	19830	1.18263E-04	3.12908E-04	2.64585E+00	4.59984E-09	8.11578E-02	2.14732E-01
11	11	43556	2.60141E-04	6.29503E-04	2.41985E+00	3.70004E-09	8.11778E-02	1.96438E-01
12	12	6699	4.01448E-05	9.98461E-05	2.48715E+00	7.84950E-09	9.49827E-02	2.36236E-01
13	13	170500	1.01332E-03	3.41471E-03	3.36982E+00	4.93891E-08	1.74770E-01	5.88943E-01
14	14	24881	1.61778E-04	2.02119E-04	1.24936E+00	1.70346E-09	8.01637E-02	1.00153E-01
15	15	962	6.17579E-06	7.41154E-06	1.20010E+00	2.85212E-10	3.85476E-02	4.62608E-02
16	16	1047	6.20955E-06	2.17363E-05	3.50047E+00	4.72085E-09	8.99697E-02	3.14936E-01
17	17	166604224	9.71750E-01	2.20504E+00	2.26914E+00	1.46755E-05	8.04220E-03	1.82489E-02
18	18	0	0.00000E+00	0.00000E+00	0.00000E+00	0.00000E+00	0.00000E+00	0.00000E+00
19	19	0	0.00000E+00	0.00000E+00	0.00000E+00	0.00000E+00	0.00000E+00	0.00000E+00
20	20	0	0.00000E+00	0.00000E+00	0.00000E+00	0.00000E+00	0.00000E+00	0.00000E+00
21	21	0	0.00000E+00	0.00000E+00	0.00000E+00	0.00000E+00	0.00000E+00	0.00000E+00
22	22	0	0.00000E+00	0.00000E+00	0.00000E+00	0.00000E+00	0.00000E+00	0.00000E+00
23	23	0	0.00000E+00	0.00000E+00	0.00000E+00	0.00000E+00	0.00000E+00	0.00000E+00
24	24	0	0.00000E+00	0.00000E+00	0.00000E+00	0.00000E+00	0.00000E+00	0.00000E+00
25	201	1043192	6.80803E-03	2.41630E-02	3.54919E+00	1.65460E-08	1.59715E-01	5.66859E-01
26	202	97096	5.66338E-04	1.45003E-03	2.56036E+00	2.07179E-09	4.14949E-03	1.06242E-02
27	203	280002	1.82082E-03	6.22352E-03	3.41798E+00	4.69431E-09	1.69988E-01	5.81016E-01
28	204	0	0.00000E+00	0.00000E+00	0.00000E+00	0.00000E+00	0.00000E+00	0.00000E+00
29	205	0	0.00000E+00	0.00000E+00	0.00000E+00	0.00000E+00	0.00000E+00	0.00000E+00
30	301	0	0.00000E+00	0.00000E+00	0.00000E+00	0.00000E+00	0.00000E+00	0.00000E+00
31	302	0	0.00000E+00	0.00000E+00	0.00000E+00	0.00000E+00	0.00000E+00	0.00000E+00
32	999	0	0.00000E+00	0.00000E+00	0.00000E+00	0.00000E+00	0.00000E+00	0.00000E+00
	total	177752841	1.03954E+00	2.41783E+00	2.32586E+00			

1energy distribution of photons produced in neutron collisions in the tabular range

all sampled photons from neutron collisions in the tabular range, without regard to energy cutoffs

energy interval	number of photons	number frequency	cum number distribution	weight of photons	weight frequency	cum weight distribution
20.000	6	3.37547E-08	3.37547E-08	4.00680E-08	3.85438E-08	3.85438E-08
15.000	45	2.53160E-07	2.86915E-07	2.74434E-07	2.63994E-07	3.02538E-07
10.000	2187	1.23036E-05	1.25905E-05	1.50398E-05	1.44677E-05	1.47702E-05
9.000	118890	6.68850E-04	6.81441E-04	7.12815E-04	6.85699E-04	7.00470E-04
8.000	100988	5.68137E-04	1.24958E-03	6.87854E-04	6.61688E-04	1.36216E-03
7.000	1840912	1.03566E-02	1.16062E-02	1.07971E-02	1.03864E-02	1.17485E-02
6.000	429486	2.41620E-03	1.40224E-02	2.60062E-03	2.50169E-03	1.42502E-02
5.000	439717	2.47375E-03	1.64961E-02	2.66847E-03	2.56696E-03	1.68172E-02

```
    4.000       4067251      2.28815E-02    3.93776E-02    2.38383E-02    2.29315E-02    3.97487E-02
    3.000        831880      4.67998E-03    4.40576E-02    5.01769E-03    4.82681E-03    4.45755E-02
    2.000     164447507      9.25147E-01    9.69205E-01    9.59503E-01    9.23003E-01    9.67579E-01
    1.000       1923435      1.08208E-02    9.80025E-01    1.17020E-02    1.12568E-02    9.78836E-01
    0.500       2600383      1.46292E-02    9.94655E-01    1.61286E-02    1.55151E-02    9.94351E-01
    0.100        830449      4.67193E-03    9.99327E-01    5.09152E-03    4.89784E-03    9.99248E-01
    0.010        100569      5.65780E-04    9.99892E-01    6.60859E-04    6.35720E-04    9.99884E-01
    0.000         19147      1.07717E-04    1.00000E+00    1.20422E-04    1.15842E-04    1.00000E+00
            <-------- energy interval containing the global photon energy cutoff,  1.000E-03 MeV

   total      177752852      1.00000E+00                   1.03954E+00    1.00000E+00


  warning.  11 photons from neutron collisions were created below a local photon energy cutoff and were not followed.

1tally       4        nps =   171447570
+                                Package Surface Neutron Dose Rate (mrem/hr) @ Z = 111.12500
          tally type 4    track length estimate of particle flux.
          particle(s): neutrons
          this tally is modified by dose function DE4 and DF4.

          volumes
                 cell:      301
                      3.81204E+02

 cell  301
                5.68309E-09 0.0082


 ============================================================================================================================

          results of 10 statistical checks for the estimated answer for the tally fluctuation chart (tfc) bin of tally       4

 tfc bin     --mean--      ---------relative error---------      ----variance of the variance----      --figure of merit--     -pdf-
 behavior    behavior      value   decrease   decrease rate      value   decrease   decrease rate      value     behavior     slope

 desired      random       <0.10      yes      1/sqrt(nps)       <0.10      yes        1/nps          constant    random      >3.00
 observed     random        0.01      yes          yes            0.00      yes         yes           constant    random       6.23
 passed?        yes          yes      yes          yes             yes      yes         yes              yes        yes         yes

 ============================================================================================================================


 this tally meets the statistical criteria used to form confidence intervals: check the tally fluctuation chart to verify.
 the results in other bins associated with this tally may not meet these statistical criteria.

 ----- estimated confidence intervals:  -----

 estimated asymmetric confidence interval(1,2,3 sigma): 5.6373E-09 to 5.7301E-09; 5.5909E-09 to 5.7766E-09; 5.5444E-09 to 5.8230E-09
 estimated  symmetric confidence interval(1,2,3 sigma): 5.6367E-09 to 5.7295E-09; 5.5902E-09 to 5.7759E-09; 5.5438E-09 to 5.8224E-09

1analysis of the results in the tally fluctuation chart bin (tfc) for tally 4 with nps = 171447570          print table 160


 normed average tally per history  = 5.68309E-09         unnormed average tally per history  = 2.16642E-06
 estimated tally relative error    = 0.0082              estimated variance of the variance  = 0.0017
 relative error from zero tallies  = 0.0051              relative error from nonzero scores  = 0.0064

 number of nonzero history tallies =       39087         efficiency for the nonzero tallies  = 0.0002
 history number of largest  tally  =    47078243         largest  unnormalized history tally = 3.73827E-01
 (largest  tally)/(average tally)  = 1.72556E+05         (largest  tally)/(avg nonzero tally)= 3.93396E+01

 (confidence interval shift)/mean  = 0.0001              shifted confidence interval center  = 5.68371E-09


 if the largest  history score sampled so far were to occur on the next history, the tfc bin quantities would change as follows:

      estimated quantities          value at nps          value at nps+1          value(nps+1)/value(nps)-1.

      mean                           5.68309E-09           5.68881E-09                  0.001006
      relative error                 8.16920E-03           8.22268E-03                  0.006548
      variance of the variance       1.70279E-03           1.87581E-03                  0.101605
      shifted center                 5.68371E-09           5.68375E-09                  0.000006
      figure of merit                1.24775E+01           1.23157E+01                 -0.012968

 the estimated inverse power slope of the 200 largest  tallies starting at 6.41056E-02 is 6.2335
 the large score tail of the empirical history score probability density function appears to have no unsampled regions.

 fom = (histories/minute)*(f(x) signal-to-noise ratio)**2 = (1.428E+05)*( 9.349E-03)**2 = (1.428E+05)*(8.740E-05) = 1.248E+01

1tally       14        nps =   171447570
```

```
+                                    2-M from Package Surface Neutron Dose Rate (mrem/hr) @ Z = 111.12500
          tally type 4    track length estimate of particle flux.
          particle(s): neutrons
          this tally is modified by dose function DE14 and DF14.

          volumes
                 cell:      302
                      1.01958E+03

 cell  302
               7.14939E-10 0.0099


 ============================================================================================================================

          results of 10 statistical checks for the estimated answer for the tally fluctuation chart (tfc) bin of tally       14

 tfc bin     --mean--      ---------relative error---------      ----variance of the variance----      --figure of merit--     -pdf-
 behavior    behavior      value   decrease   decrease rate      value   decrease   decrease rate      value     behavior     slope

 desired      random       <0.10      yes      1/sqrt(nps)       <0.10      yes        1/nps          constant    random      >3.00
 observed     random        0.01      yes          yes            0.00      yes         yes           constant    random      10.00
 passed?        yes          yes      yes          yes             yes      yes         yes              yes        yes         yes

 ============================================================================================================================


 this tally meets the statistical criteria used to form confidence intervals: check the tally fluctuation chart to verify.
 the results in other bins associated with this tally may not meet these statistical criteria.

 ----- estimated confidence intervals:  -----

 estimated asymmetric confidence interval(1,2,3 sigma): 7.0789E-10 to 7.2206E-10; 7.0081E-10 to 7.2914E-10; 6.9373E-10 to 7.3623E-10
 estimated  symmetric confidence interval(1,2,3 sigma): 7.0786E-10 to 7.2202E-10; 7.0077E-10 to 7.2910E-10; 6.9369E-10 to 7.3619E-10

1analysis of the results in the tally fluctuation chart bin (tfc) for tally 14 with nps = 171447570          print table 160


 normed average tally per history  = 7.14939E-10          unnormed average tally per history  = 7.28934E-07
 estimated tally relative error    = 0.0099               estimated variance of the variance  = 0.0001
 relative error from zero tallies  = 0.0074               relative error from nonzero scores  = 0.0066

 number of nonzero history tallies =       18389          efficiency for the nonzero tallies  = 0.0001
 history number of largest  tally  =   160886395          largest  unnormalized history tally = 2.35213E-02
 (largest  tally)/(average tally)  = 3.22681E+04          (largest  tally)/(avg nonzero tally)= 3.46099E+00

 (confidence interval shift)/mean  = 0.0001               shifted confidence interval center  = 7.14977E-10


 if the largest  history score sampled so far were to occur on the next history, the tfc bin quantities would change as follows:

      estimated quantities          value at nps          value at nps+1          value(nps+1)/value(nps)-1.

      mean                           7.14939E-10           7.15074E-10                  0.000188
      relative error                 9.90682E-03           9.90675E-03                 -0.000008
      variance of the variance       1.20396E-04           1.20440E-04                  0.000360
      shifted center                 7.14977E-10           7.14977E-10                  0.000000
      figure of merit                8.48433E+00           8.48446E+00                  0.000016

 the estimated slope of the 198 largest  tallies starting at  1.61949E-02 appears to be decreasing at least exponentially.
 the empirical history score probability density function appears to be increasing at the largest  history scores:
 please examine. see print table 161.
 the large score tail of the empirical history score probability density function appears to have no unsampled regions.

 fom = (histories/minute)*(f(x) signal-to-noise ratio)**2 = (1.428E+05)*( 7.709E-03)**2 = (1.428E+05)*(5.943E-05) = 8.484E+00

1tally       24        nps =   171447570
+                                    Package Surface Gamma Dose Rate (mrem/hr) @ Z = 111.12500
          tally type 4    track length estimate of particle flux.
          particle(s): photons
          this tally is modified by dose function DE24 and DF24.

          volumes
                 cell:      301
                      3.81204E+02

 cell  301
               2.62073E-10 0.0085


 ============================================================================================================================
```

```
          results of 10 statistical checks for the estimated answer for the tally fluctuation chart (tfc) bin of tally       24

 tfc bin     --mean--      ---------relative error---------      ----variance of the variance----      --figure of merit--     -pdf-
 behavior    behavior      value   decrease   decrease rate      value   decrease   decrease rate      value     behavior     slope

 desired      random       <0.10      yes      1/sqrt(nps)       <0.10      yes        1/nps          constant    random      >3.00
 observed     random        0.01      yes          yes            0.00      yes         yes           constant    random       4.56
 passed?        yes          yes      yes          yes             yes      yes         yes              yes        yes         yes

 ================================================================================================================================


 this tally meets the statistical criteria used to form confidence intervals: check the tally fluctuation chart to verify.
 the results in other bins associated with this tally may not meet these statistical criteria.

 ----- estimated confidence intervals:  -----

 estimated asymmetric confidence interval(1,2,3 sigma): 2.5990E-10 to 2.6434E-10; 2.5768E-10 to 2.6656E-10; 2.5546E-10 to 2.6878E-10
 estimated  symmetric confidence interval(1,2,3 sigma): 2.5985E-10 to 2.6429E-10; 2.5763E-10 to 2.6651E-10; 2.5541E-10 to 2.6873E-10

1analysis of the results in the tally fluctuation chart bin (tfc) for tally 24 with nps = 171447570          print table 160


 normed average tally per history  = 2.62073E-10          unnormed average tally per history  = 9.99030E-08
 estimated tally relative error    = 0.0085               estimated variance of the variance  = 0.0038
 relative error from zero tallies  = 0.0047               relative error from nonzero scores  = 0.0070

 number of nonzero history tallies =       44645          efficiency for the nonzero tallies  = 0.0003
 history number of largest  tally  =    56671873          largest  unnormalized history tally = 2.66690E-02
 (largest  tally)/(average tally)  = 2.66949E+05          (largest  tally)/(avg nonzero tally)= 6.95137E+01

 (confidence interval shift)/mean  = 0.0002               shifted confidence interval center  = 2.62116E-10


 if the largest  history score sampled so far were to occur on the next history, the tfc bin quantities would change as follows:

      estimated quantities           value at nps           value at nps+1          value(nps+1)/value(nps)-1.

      mean                            2.62073E-10            2.62481E-10                  0.001557
      relative error                  8.46907E-03            8.59762E-03                  0.015179
      variance of the variance        3.81789E-03            4.64129E-03                  0.215670
      shifted center                  2.62116E-10            2.62122E-10                  0.000020
      figure of merit                 1.16095E+01            1.12650E+01                 -0.029681

 the estimated inverse power slope of the 200 largest  tallies starting at 3.19323E-03 is 4.5605
 the large score tail of the empirical history score probability density function appears to have no unsampled regions.

 fom = (histories/minute)*(f(x) signal-to-noise ratio)**2 = (1.428E+05)*( 9.018E-03)**2 = (1.428E+05)*(8.132E-05) = 1.161E+01

1tally       34        nps =   171447570
+                                2-M from Package Surface Gamma Dose Rate (mrem/hr) @ Z = 111.12500
           tally type 4    track length estimate of particle flux.
           particle(s): photons
           this tally is modified by dose function DE34 and DF34.

           volumes
                  cell:      302
                       1.01958E+03

 cell  302
                 3.11558E-11 0.0095


 ================================================================================================================================

          results of 10 statistical checks for the estimated answer for the tally fluctuation chart (tfc) bin of tally       34

 tfc bin     --mean--      ---------relative error---------      ----variance of the variance----      --figure of merit--     -pdf-
 behavior    behavior      value   decrease   decrease rate      value   decrease   decrease rate      value     behavior     slope

 desired      random       <0.10      yes      1/sqrt(nps)       <0.10      yes        1/nps          constant    random      >3.00
 observed     random        0.01      yes          yes            0.00      yes         yes           constant    random      10.00
 passed?        yes          yes      yes          yes             yes      yes         yes              yes        yes         yes

 ================================================================================================================================


 this tally meets the statistical criteria used to form confidence intervals: check the tally fluctuation chart to verify.
 the results in other bins associated with this tally may not meet these statistical criteria.
```

```
 ----- estimated confidence intervals:  -----

 estimated asymmetric confidence interval(1,2,3 sigma): 3.0860E-11 to 3.1455E-11; 3.0563E-11 to 3.1753E-11; 3.0266E-11 to 3.2050E-11
 estimated  symmetric confidence interval(1,2,3 sigma): 3.0858E-11 to 3.1453E-11; 3.0561E-11 to 3.1751E-11; 3.0263E-11 to 3.2048E-11

1analysis of the results in the tally fluctuation chart bin (tfc) for tally 34 with nps = 171447570          print table 160


 normed average tally per history  = 3.11558E-11          unnormed average tally per history  = 3.17657E-08
 estimated tally relative error    = 0.0095               estimated variance of the variance  = 0.0003
 relative error from zero tallies  = 0.0070               relative error from nonzero scores  = 0.0065

 number of nonzero history tallies =       20228          efficiency for the nonzero tallies  = 0.0001
 history number of largest  tally  =   141742412          largest  unnormalized history tally = 1.99122E-03
 (largest  tally)/(average tally)  = 6.26847E+04          (largest  tally)/(avg nonzero tally)= 7.39577E+00

 (confidence interval shift)/mean  = 0.0001               shifted confidence interval center  = 3.11579E-11


 if the largest  history score sampled so far were to occur on the next history, the tfc bin quantities would change as follows:

      estimated quantities           value at nps           value at nps+1          value(nps+1)/value(nps)-1.

      mean                            3.11558E-11            3.11672E-11                  0.000366
      relative error                  9.54731E-03            9.55082E-03                  0.000367
      variance of the variance        2.69260E-04            2.70617E-04                  0.005037
      shifted center                  3.11579E-11            3.11579E-11                  0.000000
      figure of merit                 9.13532E+00            9.12861E+00                 -0.000734

 the estimated slope of the 200 largest  tallies starting at  1.14935E-03 appears to be decreasing at least exponentially.
 the empirical history score probability density function appears to be increasing at the largest  history scores:
 please examine. see print table 161.
 the large score tail of the empirical history score probability density function appears to have no unsampled regions.

 fom = (histories/minute)*(f(x) signal-to-noise ratio)**2 = (1.428E+05)*( 7.999E-03)**2 = (1.428E+05)*(6.399E-05) = 9.135E+00

1status of the statistical checks used to form confidence intervals for the mean for each tally bin


 tally   result of statistical checks for the tfc bin (the first check not passed is listed) and error magnitude check for all bins

        4   passed the 10 statistical checks for the tally fluctuation chart bin result
          passed all bin error check:     1 tally bins all have relative errors less than 0.10 with no zero bins

       14   passed the 10 statistical checks for the tally fluctuation chart bin result
          passed all bin error check:     1 tally bins all have relative errors less than 0.10 with no zero bins

       24   passed the 10 statistical checks for the tally fluctuation chart bin result
          passed all bin error check:     1 tally bins all have relative errors less than 0.10 with no zero bins

       34   passed the 10 statistical checks for the tally fluctuation chart bin result
          passed all bin error check:     1 tally bins all have relative errors less than 0.10 with no zero bins


 the 10 statistical checks are only for the tally fluctuation chart bin and do not apply to other tally bins.

1tally fluctuation charts

                          tally       4                          tally      14                          tally      24
      nps      mean     error   vov  slope    fom      mean     error   vov  slope    fom      mean     error   vov  slope    fom
    16384000 5.9170E-09 0.0265 0.0142  2.7      12  7.4784E-10 0.0313 0.0012  2.4 9.0E+00  2.5732E-10 0.0261 0.0194  3.0      13
    32768000 5.8371E-09 0.0180 0.0056  3.7      13  7.3031E-10 0.0224 0.0006  2.3 8.7E+00  2.5931E-10 0.0197 0.0172  2.8      11
    49152000 5.8140E-09 0.0155 0.0062  3.8      12  7.2340E-10 0.0184 0.0004  2.1 8.6E+00  2.6214E-10 0.0163 0.0133  2.5      11
    65536000 5.8045E-09 0.0134 0.0045  3.1      12  7.1340E-10 0.0160 0.0003  2.0 8.5E+00  2.6326E-10 0.0145 0.0141  2.7      10
    81920000 5.7419E-09 0.0120 0.0035  3.2      12  7.1880E-10 0.0143 0.0003  2.1 8.5E+00  2.6244E-10 0.0126 0.0103  3.2      11
    98304000 5.7412E-09 0.0109 0.0028  4.3      12  7.1736E-10 0.0131 0.0002  2.2 8.5E+00  2.6052E-10 0.0114 0.0079  3.6      11
   114688000 5.7437E-09 0.0101 0.0024  5.8      12  7.1261E-10 0.0121 0.0002  2.6 8.5E+00  2.6185E-10 0.0106 0.0069  3.5      11
   131072000 5.7188E-09 0.0093 0.0020  6.1      13  7.1480E-10 0.0113 0.0002 10.0 8.5E+00  2.6196E-10 0.0098 0.0057  3.6      11
   147456000 5.6975E-09 0.0088 0.0018  6.7      13  7.1275E-10 0.0107 0.0001 10.0 8.5E+00  2.6231E-10 0.0092 0.0047  3.8      11
   163840000 5.6938E-09 0.0084 0.0018  5.7      12  7.1530E-10 0.0101 0.0001 10.0 8.5E+00  2.6166E-10 0.0087 0.0040  4.4      12
   171447570 5.6831E-09 0.0082 0.0017  6.2      12  7.1494E-10 0.0099 0.0001 10.0 8.5E+00  2.6207E-10 0.0085 0.0038  4.6      12


                          tally      34
      nps      mean     error   vov  slope    fom
    16384000 3.0563E-11 0.0308 0.0029  2.3 9.2E+00
    32768000 3.0828E-11 0.0222 0.0015  2.2 8.9E+00
    49152000 3.1033E-11 0.0180 0.0010  3.6 9.0E+00
    65536000 3.0838E-11 0.0156 0.0007 10.0 9.0E+00
    81920000 3.0875E-11 0.0139 0.0006 10.0 9.0E+00
    98304000 3.0942E-11 0.0127 0.0005 10.0 9.1E+00
```

```
   114688000   3.1228E-11 0.0117 0.0004 10.0 9.1E+00
   131072000   3.1171E-11 0.0109 0.0003 10.0 9.1E+00
   147456000   3.1194E-11 0.0103 0.0003 10.0 9.2E+00
   163840000   3.1136E-11 0.0098 0.0003 10.0 9.1E+00
   171447570   3.1156E-11 0.0095 0.0003 10.0 9.1E+00

*****************************************************************************************************************************

dump no.    2 on file NCT_HP_SC-30G3_252Cf_0.r     nps =   171447570     coll =    22808604502     ctm =     1200.92
nrn =      420792660560
tally data written to file NCT_HP_SC-30G3_252Cf_0.m

        8 warning messages so far.


run terminated when it had used 1200  minutes of computer time.

computer time = 1201.20 minutes

mcnp     version 6     02/20/18                    08/29/21 09:52:54                    probid =  08/29/21 09:02:49
```

2. SC-30G3 HAC Model with ^{252}Cf – Polyethylene with Secondary Gammas

```
         Code Name & Version = MCNP_6.20, 6.2.0

    _/      _/        _/_/_/       _/      _/       _/_/_/        _/_/_/
   _/_/  _/_/      _/            _/_/    _/       _/    _/     _/
  _/  _/  _/      _/            _/  _/  _/       _/_/_/      _/_/_/
 _/      _/      _/            _/    _/_/       _/          _/    _/
_/      _/        _/_/_/      _/      _/       _/            _/_/

 +-----------------------------------------------------------------------+
 | Copyright (2018).  Los Alamos National Security, LLC.  All rights     !
 | reserved.                                                             !
 |  This material was produced under U.S. Government contract            !
 | DE-AC52-06NA25396 for Los Alamos National Laboratory, which is        !
 | operated by Los Alamos National Security, LLC for the U.S.            !
 | Department of Energy. The Government is granted for itself and        !
 | others acting on its behalf a paid-up, nonexclusive, irrevocable      !
 | worldwide license in this material to reproduce, prepare derivative   !
 | works, and perform publicly and display publicly. Beginning five (5)  !
 | years after February 14, 2018, subject to additional five-year        !
 | worldwide renewals, the Government is granted for itself and others   !
 | acting on its behalf a paid-up, nonexclusive, irrevocable worldwide   !
 | license in this material to reproduce, prepare derivative works,      !
 | distribute copies to the public, perform publicly and display         !
 | publicly, and to permit others to do so. NEITHER THE UNITED STATES    !
 | NOR THE UNITED STATES DEPARTMENT OF ENERGY, NOR LOS ALAMOS NATIONAL   !
 | SECURITY, LLC, NOR ANY OF THEIR EMPLOYEES, MAKES ANY WARRANTY,        !
 | EXPRESS OR IMPLIED, OR ASSUMES ANY LEGAL LIABILITY OR RESPONSIBILITY  !
 | FOR THE ACCURACY, COMPLETENESS, OR USEFULNESS OF ANY INFORMATION,     !
 | APPARATUS, PRODUCT, OR PROCESS DISCLOSED, OR REPRESENTS THAT ITS USE  !
 | WOULD NOT INFRINGE PRIVATELY OWNED RIGHTS.                            !
 +-----------------------------------------------------------------------+

1mcnp     version 6     ld=02/20/18                    08/29/21 11:11:43
 ************************************************************************                probid =  08/29/21 11:11:43
 i=HAC_HP_SC-30G3_252Cf_0.i name=HAC_HP_SC-30G3_252Cf_0. tasks 24


  warning.  universe map (print table 128) disabled.

  comment.  Physics models disabled.
        1-       title HP/SC-30G3 with a Concentrated 252Cf Neutron Source - HAC
        2-       c
        3-       c    Universe Fill Boundary
        4-       c
        5-           1    0           -107  108 -109     fill=1     $Shielded Container
        6-                           imp:n=1   imp:p=1   trcl=1
        7-       c
        8-       c    Payload Cell                                  $Material Density 100%
        9-       c
       10-           2    1   -0.9400   -1    2   -3                $Payload
       11-                           imp:n=1   imp:p=1      u=1
       12-       c
       13-       c    Shielded Container Cells                      $Material Density 100%
       14-       c
       15-           3    2   -7.8526  -11   12  -13  -14           $Lower Flange Steel
       16-                            ((11  :13 :-15 :-16)
```

```
                          (11  :16 :-17 :-18)
                          (11  :18 :-19 :-20)
                          (11  :20 :-21 :-22)
                         (-12  :26  :27)
                          (23  :24 :-27))
                        imp:n=1   imp:p=1      u=1
         4    3  -11.3500  -23  -24   25                $Lower Flange Upper Lead
                        imp:n=1   imp:p=1      u=1
         5    3  -11.3500  -26  -27   28                $Lower Flange Lower Lead
                        imp:n=1   imp:p=1      u=1
         6    2   -7.8526  (12  -26  -31):              $Lower Flange Base Steel
                         (-29   31  -32)
                        imp:n=1   imp:p=1      u=1
         7    2   -7.8526   16   33  -34  -45           $Inner Shell Steel
                        imp:n=1   imp:p=1      u=1
         8    3  -11.3500 (-16   17   18  -35):         $Sidewall Lead
                         (16   34  -35  -40):
                        (-18   19   20  -35):
                         (34   40  -43  -45)
                        imp:n=1   imp:p=1      u=1
         9    2   -7.8526   22   36  -37  -45           $Outer Shell Steel
                        imp:n=1   imp:p=1      u=1
        10    2   -7.8526 ((38  -39  -41   45):         $Upper Flange Steel
                         (40   43  -44  -45))
                       ((-38  :41  :42))
                        imp:n=1   imp:p=1      u=1
        11    2   -7.8526  -49   50  -51  -52           $Lid Steel
                         ((39  :41 :-50 :-80)
                         (-41  :63 :-64  :65)
                         (-50  :51 :-65  :83)
                          (51 :-57  :58 :-59)
                         (-53  :54 :-55  :59))
                        imp:n=1   imp:p=1      u=1
        12    2   -7.8526  -50  -80   82   83           $Lid Ring Steel
                          (80 :-81 :-83 :-84)
                        imp:n=1   imp:p=1      u=1
        13    2   -7.8526  -81   86  -87  -89           $Lid Base Steel
                          (81 :-83  :87 :-88)
                        imp:n=1   imp:p=1      u=1
        14    3  -11.3500  -50  -82   85                $Lid Plate Lead
                        imp:n=1   imp:p=1      u=1
        15    3  -11.3500   53  -54   55  -56           $Lid Ring Lead
                        imp:n=1   imp:p=1      u=1
        16    2   -7.8526   59   60  -61  -62           $Lid Ring Cover Plate Steel
                        imp:n=1   imp:p=1      u=1
     c
     c   Cavity (Void) Cells
     c
        17    1   -0.9400 ((13  -33  -86):              $Payload Cavity
                         (-13   15   16  -33):
                         (-33   86   89):
                         (-33  -45   81   84  -89):
                         (-33  -45   80  -84):
                         (-38   42   45   80):
                         (-41  -42   80))
                           (1  :-2   :3)
                        imp:n=1   imp:p=1      u=1
        18    0           -23  -25   27                $Lower Flange Upper Lead
                        imp:n=1   imp:p=1      u=1     $  Axial Cavity
        19    0          (-26  -28   29   31):         $Lower Flange Lower Lead
                         (-28  -29   32)               $  Axial/Radial Cavity
                        imp:n=1   imp:p=1      u=1
        20    0          (-20   21   22  -36):         $Sidewall Lead Outer Radial Gap
                          (20   35  -36  -40):
                         (-36   40   44  -45)
                        imp:n=1   imp:p=1      u=1
        21    0            41  -63   64  -65           $Lid Gasket Recess Cavity
                        imp:n=1   imp:p=1      u=1
        22    0            53  -54   56  -59           $Lid Lead Ring Axial Cavity
                        imp:n=1   imp:p=1      u=1
        23    0          (-82   83  -87   88):         $Lid Lead Plate Axial Cavity
                         (-82  -85   87)
                        imp:n=1   imp:p=1      u=1
        24    0          ((11 :-12  :14  :22)          $Exterior Void
                         (-22  :37  :45)
                         (-45  :49  :51  :52)):
                         ((12  -29  -30):
                         (-51   57  -58   62):
                          (57   59  -60  -62):
                         (-58   59   61  -62))
                        imp:n=1   imp:p=1      u=1
```

```
c
c    HalfPACT Package Cells                          $Material Density 100%
c
  201    4   -8.0128 (201 -202  204 -205):          $HalfPACT ICV/OCV Steel Structure
                      (-202  203 -204):
                      (-202  205 -206)
                      imp:n=1   imp:p=1
c
c    HalfPACT Package Void Cells
c
  202    0           -201  204 -205                 $HalfPACT ICV Interior Void
                     #1
                     imp:n=1   imp:p=1
  203    0           (202  203 -206 -211):          $HalfPACT OCA Foam Void
                     (-203 -211  214):
                      (206 -211 -215)
                     imp:n=1   imp:p=1
  204    0           (211 -212  214 -215):          $HalfPACT OCA Steel Structure
                     (-212  213 -214):
                     (-212  215 -216)
                     imp:n=1   imp:p=1
  205    0           -999                           $HalfPACT OCA Exterior Void
                     ((212  213 -216):
                     (-213):
                      (216))
                     (-301 :302 :303)
                     imp:n=1   imp:p=1
c
c    HalfPACT Package 1-meter Tally Cell
c
  301    0            301 -302 -303                 $Package Side Middle @ 1-meter
                     imp:n=1   imp:p=1
c
c    World Cell
c
  999    0            999
                     imp:n=0   imp:p=0


c
c    Payload Surfaces
c
     1       c/z   0.00000  24.77769   1.27000  $Radius
     2        pz  51.07305                     $Plane, Bottom
     3        pz  53.61305                     $Plane, Top
c
c    Shielded Container Lower Flange Surfaces
c
    11        cz  35.43300                     $Radius, Outer
    12        pz   0.38100                     $Plane, Lower Flange Bottom
    13        pz  14.16304                     $Plane, Lower Flange Top
    14        kz -35.24250   1.00000    1      $Chamfer, Bottom Outer Corner
    15        cz  25.79370                     $Radius, Inner Shell Step
    16        pz  13.97000                     $Plane, Inner Shell Step
    17        cz  27.19070                     $Radius, Inner Lead Step
    18        kz  10.47452  192.3724   -1      $Cone, Inner Lead Step Vertex
    19        cz  31.43250                     $Radius, Outer Lead Step
    20        pz   5.08000                     $Plane, Outer Lead Step
    21        cz  34.23920                     $Radius, Outer Shell Step
    22        pz   4.44500                     $Plane, Outer Shell Step
    23        cz  25.40000                     $Radius, Upper Lead Plate Recess
    24        pz  10.18540                     $Plane, Upper Lead Plate Recess
    25        pz   6.18490                     $Plane, Upper Lead Plate Bottom
    26        cz  29.21000                     $Radius, Lower Lead Plate Recess
    27        pz   5.71500                     $Plane, Lower Lead Plate Recess
    28        pz   4.00050                     $Plane, Lower Lead Plate Bottom
    29        cz  29.07030                     $Radius, Base Plate
    30        pz   0.38100                     $Plane, Base Plate Bottom
    31        pz   2.54000                     $Plane, Base Plate Weld Elevation
    32        pz   3.81000                     $Plane, Base Plate Top
c
c    Shielded Container Sidewall Inner Shell Surfaces
c
    33        cz  26.04770                     $Radius, Inner
    34        cz  27.19070                     $Radius, Outer
c
c    Shielded Container Sidewall Lead Shell Surface
c
    35        cz  33.47720                     $Radius, Outer
c
c    Shielded Container Sidewall Outer Shell Surfaces
c
```

```
179-          36        cz  34.29000                     $Radius, Inner
180-          37        cz  35.43300                     $Radius, Outer
181-       c
182-       c    Shielded Container Upper Flange Surfaces
183-       c
184-          38        cz  25.72385                     $Radius, Inner
185-          39        cz  35.43300                     $Radius, Outer
186-          40        pz  97.15500                     $Plane, Upper Flange Bottom
187-          41        pz 101.91750                     $Plane, Upper Flange Top
188-          42        kz  30.60680   0.13247    1      $Chamfer, Top Inner Corner
189-          43        cz  27.24150                     $Radius, Inner Shell Step
190-          44        cz  34.23920                     $Radius, Outer Shell Step
191-          45        pz  97.79000                     $Plane, Shell Step Top
192-       c
193-       c    Shielded Container Lid Surfaces
194-       c
195-          49        cz  35.43300                     $Radius, Lid Outer
196-          50        pz 100.34270                     $Plane, Lid Bottom
197-          51        pz 106.62920                     $Plane, Lid Top
198-          52        kz 142.57020   1.00000   -1      $Chamfer, Top Outside Corner
199-          53        cz  22.54250                     $Radius, Lead Ring Recess Inner
200-          54        cz  29.84500                     $Radius, Lead Ring Recess Outer
201-          55        pz 104.21620                     $Plane, Lead Ring Recess Bottom
202-          56        pz 105.93070                     $Plane, Lead Ring Top
203-          57        cz  22.22500                     $Radius, Lead Ring Cover Recess Inner
204-          58        cz  30.16250                     $Radius, Lead Ring Cover Recess Outer
205-          59        pz 106.14660                     $Plane, Lead Ring Cover Recess Bottom
206-          60        cz  22.27580                     $Radius, Lead Ring Cover Inner
207-          61        cz  30.11170                     $Radius, Lead Ring Cover Outer
208-          62        pz 106.55579                     $Plane, Lead Ring Cover Top
209-          63        cz  28.57500                     $Radius, Gasket Recess Outer
210-          64        cz  26.33980                     $Radius, Gasket Recess Inner
211-          65        pz 102.23500                     $Plane, Gasket Recess Top
212-       c
213-       c    Shielded Container Lid Ring Surfaces
214-       c
215-          80        cz  25.66035                     $Radius, Outer Upper
216-          81        cz  25.52700                     $Radius, Outer Lower
217-          82        cz  24.13000                     $Radius, Inner
218-          83        pz  93.28150                     $Plane, Bottom
219-          84        kz  26.24737   0.13247    1      $Cone, Outer Radius Transition
220-          85        pz  95.19920                     $Plane, Lead Plate Bottom
221-       c
222-       c    Shielded Container Lid Base Surfaces
223-       c
224-          86        pz  90.52560                     $Plane, Bottom
225-          87        pz  94.52610                     $Plane, Top
226-          88        cz  24.06650                     $Radius, Lid Ring Step
227-          89        kz  20.58124   0.13247    1      $Chamfer, Bottom Outside Corner
228-       c
229-       c    Shielded Container Universe Fill Boundary Surfaces
230-       c
231-         107       cz   35.43301                     $Radius, Fill Boundary
232-         108       pz   -0.00001                     $Plane, Fill Boundary Bottom
233-         109       pz  107.32771                     $Plane, Fill Boundary Top
234-       c
235-       c    HalfPACT Package ICV/OCV Surfaces
236-       c
237-         201       cz   92.23375                    $Radius, Shell Inner
238-         202       cz   93.34500                    $Radius, Shell Outer
239-         203       pz   22.86000                    $Plane, Lower Head Bottom
240-         204       pz   24.13000                    $Plane, Lower Head Top
241-         205       pz  198.12000                    $Plane, Upper Head Bottom
242-         206       pz  199.39000                    $Plane, Upper Head Top
243-       c
244-       c    HalfPACT Package OCA Surfaces
245-       c
246-         211       cz  109.22000                    $Radius, Shell Inner
247-         212       cz  109.85500                    $Radius, Shell Outer
248-         213       pz    2.54000                    $Plane, Lower Head Bottom
249-         214       pz    3.17500                    $Plane, Lower Head Top
250-         215       pz  219.39250                    $Plane, Upper Head Bottom
251-         216       pz  220.02750                    $Plane, Upper Head Top
252-       c
253-       c    HalfPACT Package Tally Surfaces
254-       c
255-         301       py  209.85500                    $Plane, Side Disk Inside @ 1.00-meter
256-         302       py  209.95500                    $Plane, Side Disk Outside @ 1.00-meter
257-         303      c/y    0.00000 111.12500   2.54000 $Radius, Side Disk
258-       c
259-       c    World Surface (Problem Boundary)
```

```
      260-       c
      261-         999      sz   114.93500       400
      262-
      263-       c
      264-       c    Physics Cards
      265-       c
      266-       mode n    p
comment.  photonuclear physics may be needed (phys:p).
      267-       c
      268-       c    Material Cards
      269-       c
      270-       m1     1001.84C -0.143704      $Payload (Polyethylene)
      271-              1002.84C -0.000033       6000.84C -0.856263
      272-            plib = 84P
      273-       c
      274-       m2    26054.84C -0.058450      $Carbon Steel
      275-             26056.84C -0.917540      26057.84C -0.021190      26058.84C -0.002820
      276-            plib = 84P
      277-       c
      278-       m3    82204.84C -0.014000      $Lead
      279-             82206.84C -0.241000      82207.84C -0.221000      82208.84C -0.524000
      280-            plib = 84P
      281-       c
      282-       m4    14028.84C -0.009222      $Stainless Steel (ASTM A240, Type 304)
      283-             14029.84C -0.000469      14030.84C -0.000309      24050.84C -0.008256
      284-             24052.84C -0.159199      24053.84C -0.018052      24054.84C -0.004494
      285-             25055.84C -0.020000      26054.84C -0.039746      26056.84C -0.623927
      286-             26057.84C -0.014409      26058.84C -0.001918      28058.84C -0.068077
      287-             28060.84C -0.026223      28061.84C -0.001140      28062.84C -0.003635
      288-             28064.84C -0.000926
      289-            plib = 84P
      290-       c
      291-       c    Specify Universe Transformations
      292-       c
      293-       *tr1             0.00000  56.80073  58.78195
      294-       c
      295-       c    Specify Explicit Analysis for Weight Windows Evaluation
      296-       c
      297-       cut:n  2j     0
      298-       cut:p  2j     0
      299-       c
      300-       c    Source Cards
      301-       c
      302-        sdef par=1 axs=0 0 1 erg=d1 pos=d2 rad=d3 ext=d4
      303-        sc1  Concentrated 252Cf Neutron Source
      304-        si1    L   0.100000  0.500000  1.000000  2.000000  3.000000
      305-                   4.000000  6.000000  8.000000 10.000000 15.000000
      306-        sp1        0.00E+00  1.80E+11  2.71E+11  5.36E+11  4.10E+11
      307-                   2.73E+11  2.66E+11  8.53E+10  2.44E+10  8.36E+09
      308-        si2    L    0.00000  81.57842 111.12500
      309-        sp2         1
      310-        si3        0.00000   1.27000
      311-        sp3   -21    1
      312-        si4       -1.27000   1.27000
      313-        sp4   -21    0    0
      314-       c
      315-       c    Package Tally Cards
      316-       c
      317-       f4:n 301
      318-       fc4 Package 1-Meter Neutron Dose Rate (mrem/hr) @ Z = 111.12500
      319-       sd4 2.02683
      320-       f14:p 301
      321-       fc14 Package 1-Meter Gamma Dose Rate (mrem/hr) @ Z = 111.12500
      322-       sd14 2.02683
      323-       c
      324-       c    ANSI/ANS-6.1.1-1977 Neutron Flux-to-Dose Rate Factor Cards
      325-       c
      326-       de0    2.50E-08  1.00E-07  1.00E-06  1.00E-05  1.00E-04 $Energy (Mev)
      327-              1.00E-03  1.00E-02  1.00E-01  5.00E-01  1.00E+00
      328-              2.50E+00  5.00E+00  7.00E+00  1.00E+01  1.40E+01
      329-              2.00E+01
      330-       df0    3.67E-03  3.67E-03  4.46E-03  4.54E-03  4.18E-03 $Factor (mrem/hr)
      331-              3.76E-03  3.56E-03  2.17E-02  9.26E-02  1.32E-01
      332-              1.25E-01  1.56E-01  1.47E-01  1.47E-01  2.08E-01
      333-              2.27E-01
      334-       c
      335-       c    ANSI/ANS-6.1.1-1977 Gamma Flux-to-Dose Rate Factor Cards
      336-       c
      337-       de14       0.01      0.03      0.05      0.07      0.10  $Energy (Mev)
      338-                  0.15      0.20      0.25      0.30      0.35
      339-                  0.40      0.45      0.50      0.55      0.60
```

```
      340-                0.65      0.70      0.80      1.00      1.40
      341-                1.80      2.20      2.60      2.80      3.25
      342-                3.75      4.25      4.75      5.00      5.25
      343-                5.75      6.25      6.75      7.50      9.00
      344-               11.00     13.00     15.00
      345-      df14   3.96E-03  5.82E-04  2.90E-04  2.58E-04  2.83E-04  $Factor (mrem/hr)
      346-             3.79E-04  5.01E-04  6.31E-04  7.59E-04  8.78E-04
      347-             9.85E-04  1.08E-03  1.17E-03  1.27E-03  1.36E-03
      348-             1.44E-03  1.52E-03  1.68E-03  1.98E-03  2.51E-03
      349-             2.99E-03  3.42E-03  3.82E-03  4.01E-03  4.41E-03
      350-             4.83E-03  5.23E-03  5.60E-03  5.80E-03  6.01E-03
      351-             6.37E-03  6.74E-03  7.11E-03  7.66E-03  8.77E-03
      352-             1.03E-02  1.18E-02  1.33E-02
      353-      c
      354-      c    Runtime and Print Cards
      355-      c
      356-      prdmp       j    j     1    2
      357-      ctme      9600

 ***************************************************
 * Random Number Generator  =                    1 *
 * Random Number Seed       =      19073486328125 *
 * Random Number Multiplier =      19073486328125 *
 * Random Number Adder      =                    0 *
 * Random Number Bits Used  =                   48 *
 * Random Number Stride     =               152917 *
 ***************************************************


  comment.  total nubar used if fissionable isotopes are present.

 surface       11   and surface       37   are the same.       37   will be deleted.

 surface       11   and surface       39   are the same.       39   will be deleted.

 surface       11   and surface       49   are the same.       49   will be deleted.

 surface       12   and surface       30   are the same.       30   will be deleted.

 surface       17   and surface       34   are the same.       34   will be deleted.

 surface       21   and surface       44   are the same.       44   will be deleted.

 surface       31   and surface      213   are the same.      213   will be deleted.

  comment.           7 surfaces were deleted for being the same as others.
1cells                                                                                                  print table 60

                          atom        gram                                                    neutron     photon      photon wt
            cell      mat   density     density     volume       mass            pieces importance importance generation

       1       1        0  0.00000E+00 0.00000E+00 4.23329E+05 0.00000E+00          1  1.0000E+00 1.0000E+00 -1.000E+00
       2       2        1  1.21080E-01 9.40000E-01 1.28704E+01 1.20981E+01          1  1.0000E+00 1.0000E+00 -1.000E+00
       3       3        2  8.46854E-02 7.85260E+00 1.86223E+04 1.46234E+05          1  1.0000E+00 1.0000E+00 -1.000E+00
       4       4        3  3.29855E-02 1.13500E+01 8.10833E+03 9.20296E+04          1  1.0000E+00 1.0000E+00 -1.000E+00
       5       5        3  3.29855E-02 1.13500E+01 4.59569E+03 5.21611E+04          1  1.0000E+00 1.0000E+00 -1.000E+00
       6       6        2  8.46854E-02 7.85260E+00 9.15889E+03 7.19211E+04          1  1.0000E+00 1.0000E+00 -1.000E+00
       7       7        2  8.46854E-02 7.85260E+00 1.60239E+04 1.25829E+05          1  1.0000E+00 1.0000E+00 -1.000E+00
       8       8        3  3.29855E-02 1.13500E+01 1.07766E+05 1.22315E+06          1  1.0000E+00 1.0000E+00 -1.000E+00
       9       9        2  8.46854E-02 7.85260E+00 2.33702E+04 1.83517E+05          1  1.0000E+00 1.0000E+00 -1.000E+00
      10      10        2  8.46854E-02 7.85260E+00 8.54592E+03 6.71077E+04          1  1.0000E+00 1.0000E+00 -1.000E+00
      11      11        2  8.46854E-02 7.85260E+00 1.87689E+04 1.47384E+05          1  1.0000E+00 1.0000E+00 -1.000E+00
      12      12        2  8.46854E-02 7.85260E+00 1.61985E+03 1.27201E+04          1  1.0000E+00 1.0000E+00 -1.000E+00
      13      13        2  8.46854E-02 7.85260E+00 7.90534E+03 6.20775E+04          1  1.0000E+00 1.0000E+00 -1.000E+00
      14      14        3  3.29855E-02 1.13500E+01 9.40856E+03 1.06787E+05          1  1.0000E+00 1.0000E+00 -1.000E+00
      15      15        3  3.29855E-02 1.13500E+01 2.06057E+03 2.33874E+04          1  1.0000E+00 1.0000E+00 -1.000E+00
      16      16        2  8.46854E-02 7.85260E+00 5.27705E+02 4.14386E+03          1  1.0000E+00 1.0000E+00 -1.000E+00
      17      17        1  1.21080E-01 9.40000E-01 0.00000E+00 0.00000E+00          0  1.0000E+00 1.0000E+00 -1.000E+00
      18      18        0  0.00000E+00 0.00000E+00 9.52407E+02 0.00000E+00          1  1.0000E+00 1.0000E+00 -1.000E+00
      19      19        0  0.00000E+00 0.00000E+00 5.43116E+02 0.00000E+00          1  1.0000E+00 1.0000E+00 -1.000E+00
      20      20        0  0.00000E+00 0.00000E+00 1.59468E+04 0.00000E+00          1  1.0000E+00 1.0000E+00 -1.000E+00
      21      21        0  0.00000E+00 0.00000E+00 1.22433E+02 0.00000E+00          1  1.0000E+00 1.0000E+00 -1.000E+00
      22      22        0  0.00000E+00 0.00000E+00 2.59479E+02 0.00000E+00          1  1.0000E+00 1.0000E+00 -1.000E+00
      23      23        0  0.00000E+00 0.00000E+00 1.24321E+03 0.00000E+00          1  1.0000E+00 1.0000E+00 -1.000E+00
      24      24        0  0.00000E+00 0.00000E+00 0.00000E+00 0.00000E+00          0  1.0000E+00 1.0000E+00 -1.000E+00
      25     201        4  8.80954E-02 8.01280E+00 1.82252E+05 1.46035E+06          1  1.0000E+00 1.0000E+00 -1.000E+00
      26     202        0  0.00000E+00 0.00000E+00 0.00000E+00 0.00000E+00          0  1.0000E+00 1.0000E+00 -1.000E+00
      27     203        0  0.00000E+00 0.00000E+00 3.27072E+06 0.00000E+00          1  1.0000E+00 1.0000E+00 -1.000E+00
      28     204        0  0.00000E+00 0.00000E+00 1.42644E+05 0.00000E+00          1  1.0000E+00 1.0000E+00 -1.000E+00
      29     205        0  0.00000E+00 0.00000E+00 0.00000E+00 0.00000E+00          0  1.0000E+00 1.0000E+00 -1.000E+00
      30     301        0  0.00000E+00 0.00000E+00 2.02683E+00 0.00000E+00          1  1.0000E+00 1.0000E+00 -1.000E+00
```

```
      31      999        0  0.00000E+00 0.00000E+00 0.00000E+00 0.00000E+00           0  0.0000E+00 0.0000E+00 -1.000E+00

 total                                                4.27451E+06 3.77881E+06

    minimum source weight = 1.0000E+00    maximum source weight = 1.0000E+00

  comment.  threading will be used when possible in portions of mcnp6.

  comment.  threading will be used for n/p/e table physics.

  comment.  threading will generally not be used for model physics.

        1 warning message so far.
1cross-section tables                                                                                    print table 100
     XSDIR used: C:\MCNP\MCNP_DATA/xsdir_mcnp6.2

     table    length

                        tables from file xdata/endf71x/H/1001.714nc

   1001.84c   15325  H1 ENDF71x (jlconlin)  Ref. see jlconlin (ref 09/10/2012  10:00:53)         mat 125      12/17/12
                     Energy range:   1.00000E-11  to  2.00000E+01 MeV.
                     particle-production data for deuterons being expunged from   1001.84c
                     temperature = 2.1543E-07 adjusted to 2.5300E-08

                        tables from file xdata/endf71x/H/1002.714nc

   1002.84c    7283  H2 ENDF71x (jlconlin)  Ref. see jlconlin (ref 09/10/2012  10:00:53)         mat 128      12/17/12
                     Energy range:   1.00000E-11  to  1.50000E+02 MeV.
                     particle-production data for protons   being expunged from   1002.84c
                     particle-production data for tritons   being expunged from   1002.84c
                     temperature = 2.1543E-07 adjusted to 2.5300E-08

                        tables from file xdata/endf71x/C/6000.714nc

   6000.84c   55343  C0 ENDF71x (jlconlin)  Ref. see jlconlin (ref 09/10/2012  10:00:53)         mat 600      12/20/12
                     Energy range:   1.00000E-11  to  1.50000E+02 MeV.
                     particle-production data for protons   being expunged from   6000.84c
                     particle-production data for deuterons being expunged from   6000.84c
                     particle-production data for alphas    being expunged from   6000.84c
                     temperature = 2.1543E-07 adjusted to 2.5300E-08

                        tables from file xdata/endf71x/Si/14028.714nc

  14028.84c  169896  Si28 ENDF71x (jlconlin)  Ref. see jlconlin (ref 09/10/2012  10:00:53)        mat1425      12/14/12
                     Energy range:   1.00000E-11  to  1.50000E+02 MeV.
                     particle-production data for protons   being expunged from  14028.84c
                     particle-production data for deuterons being expunged from  14028.84c
                     particle-production data for tritons   being expunged from  14028.84c
                     particle-production data for alphas    being expunged from  14028.84c
                     temperature = 2.1543E-07 adjusted to 2.5300E-08

                        tables from file xdata/endf71x/Si/14029.714nc

  14029.84c  158834  Si29 ENDF71x (jlconlin)  Ref. see jlconlin (ref 09/10/2012  10:00:53)        mat1428      12/14/12
                     Energy range:   1.00000E-11  to  1.50000E+02 MeV.
                     particle-production data for protons   being expunged from  14029.84c
                     particle-production data for deuterons being expunged from  14029.84c
                     particle-production data for tritons   being expunged from  14029.84c
                     particle-production data for alphas    being expunged from  14029.84c
                     temperature = 2.1543E-07 adjusted to 2.5300E-08

                        tables from file xdata/endf71x/Si/14030.714nc

  14030.84c  130018  Si30 ENDF71x (jlconlin)  Ref. see jlconlin (ref 09/10/2012  10:00:53)        mat1431      12/16/12
                     Energy range:   1.00000E-11  to  1.50000E+02 MeV.
                     particle-production data for protons   being expunged from  14030.84c
                     particle-production data for deuterons being expunged from  14030.84c
                     particle-production data for tritons   being expunged from  14030.84c
                     particle-production data for alphas    being expunged from  14030.84c
                     temperature = 2.1543E-07 adjusted to 2.5300E-08

                        tables from file xdata/endf71x/Cr/24050.714nc

  24050.84c  291186  Cr50 ENDF71x (jlconlin)  Ref. see jlconlin (ref 09/10/2012  10:00:53)        mat2425      12/13/12
                     Energy range:   1.00000E-11  to  1.50000E+02 MeV.
                     particle-production data for protons   being expunged from  24050.84c
                     particle-production data for deuterons being expunged from  24050.84c
                     particle-production data for tritons   being expunged from  24050.84c
                     particle-production data for alphas    being expunged from  24050.84c
                     temperature = 2.1543E-07 adjusted to 2.5300E-08
```

```
                    tables from file xdata/endf71x/Cr/24052.714nc

24052.84c  310582  Cr52 ENDF71x (jlconlin)  Ref. see jlconlin (ref 09/10/2012  10:00:53)        mat2431      12/13/12
                   Energy range:   1.00000E-11  to  1.50000E+02 MeV.
                   particle-production data for protons   being expunged from  24052.84c
                   particle-production data for deuterons being expunged from  24052.84c
                   particle-production data for tritons   being expunged from  24052.84c
                   particle-production data for alphas    being expunged from  24052.84c
                   temperature = 2.1543E-07 adjusted to 2.5300E-08

                    tables from file xdata/endf71x/Cr/24053.714nc

24053.84c  254692  Cr53 ENDF71x (jlconlin)  Ref. see jlconlin (ref 09/10/2012  10:00:53)        mat2434      12/13/12
                   Energy range:   1.00000E-11  to  1.50000E+02 MeV.
                   particle-production data for protons   being expunged from  24053.84c
                   particle-production data for deuterons being expunged from  24053.84c
                   particle-production data for tritons   being expunged from  24053.84c
                   particle-production data for alphas    being expunged from  24053.84c
                   temperature = 2.1543E-07 adjusted to 2.5300E-08

                    tables from file xdata/endf71x/Cr/24054.714nc

24054.84c  190185  Cr54 ENDF71x (jlconlin)  Ref. see jlconlin (ref 09/10/2012  10:00:53)        mat2437      12/13/12
                   Energy range:   1.00000E-11  to  1.50000E+02 MeV.
                   particle-production data for protons   being expunged from  24054.84c
                   particle-production data for deuterons being expunged from  24054.84c
                   particle-production data for tritons   being expunged from  24054.84c
                   particle-production data for alphas    being expunged from  24054.84c
                   temperature = 2.1543E-07 adjusted to 2.5300E-08

                    tables from file xdata/endf71x/Mn/25055.714nc

25055.84c  455909  Mn55 ENDF71x (jlconlin)  Ref. see jlconlin (ref 09/10/2012  10:00:53)        mat2525      12/18/12
                   Energy range:   1.00000E-11  to  6.00000E+01 MeV.
                   particle-production data for protons   being expunged from  25055.84c
                   particle-production data for deuterons being expunged from  25055.84c
                   particle-production data for tritons   being expunged from  25055.84c
                   particle-production data for helions   being expunged from  25055.84c
                   particle-production data for alphas    being expunged from  25055.84c
                   probability tables used from 1.2500E-01 to 1.0000E+00 mev.
                   temperature = 2.1543E-07 adjusted to 2.5300E-08

                    tables from file xdata/endf71x/Fe/26054.714nc

26054.84c  217705  Fe54 ENDF71x (jlconlin)  Ref. see jlconlin (ref 09/10/2012  10:00:53)        mat2625      12/22/12
                   Energy range:   1.00000E-11  to  1.50000E+02 MeV.
                   particle-production data for protons   being expunged from  26054.84c
                   particle-production data for deuterons being expunged from  26054.84c
                   particle-production data for tritons   being expunged from  26054.84c
                   particle-production data for alphas    being expunged from  26054.84c
                   temperature = 2.1543E-07 adjusted to 2.5300E-08

                    tables from file xdata/endf71x/Fe/26056.714nc

26056.84c  352429  Fe56 ENDF71x (jlconlin)  Ref. see jlconlin (ref 09/10/2012  10:00:53)        mat2631      12/22/12
                   Energy range:   1.00000E-11  to  1.50000E+02 MeV.
                   particle-production data for protons   being expunged from  26056.84c
                   particle-production data for deuterons being expunged from  26056.84c
                   particle-production data for tritons   being expunged from  26056.84c
                   particle-production data for alphas    being expunged from  26056.84c
                   temperature = 2.1543E-07 adjusted to 2.5300E-08

                    tables from file xdata/endf71x/Fe/26057.714nc

26057.84c  241212  Fe57 ENDF71x (jlconlin)  Ref. see jlconlin (ref 09/10/2012  10:00:53)        mat2634      12/22/12
                   Energy range:   1.00000E-11  to  1.50000E+02 MeV.
                   particle-production data for protons   being expunged from  26057.84c
                   particle-production data for deuterons being expunged from  26057.84c
                   particle-production data for tritons   being expunged from  26057.84c
                   particle-production data for alphas    being expunged from  26057.84c
                   temperature = 2.1543E-07 adjusted to 2.5300E-08

                    tables from file xdata/endf71x/Fe/26058.714nc

26058.84c  135502  Fe58 ENDF71x (jlconlin)  Ref. see jlconlin (ref 09/10/2012  10:00:53)        mat2637      12/22/12
                   Energy range:   1.00000E-11  to  2.00000E+01 MeV.
                   particle-production data for protons   being expunged from  26058.84c
                   particle-production data for alphas    being expunged from  26058.84c
                   temperature = 2.1543E-07 adjusted to 2.5300E-08
```

```
                    tables from file xdata/endf71x/Ni/28058.714nc

28058.84c  420627  Ni58 ENDF71x (jlconlin)  Ref. see jlconlin (ref 09/10/2012  10:00:53)       mat2825      12/15/12
                   Energy range:   1.00000E-11  to  1.50000E+02 MeV.
                   particle-production data for protons   being expunged from  28058.84c
                   particle-production data for deuterons being expunged from  28058.84c
                   particle-production data for tritons   being expunged from  28058.84c
                   particle-production data for alphas    being expunged from  28058.84c
                   temperature = 2.1543E-07 adjusted to 2.5300E-08

                    tables from file xdata/endf71x/Ni/28060.714nc

28060.84c  344192  Ni60 ENDF71x (jlconlin)  Ref. see jlconlin (ref 09/10/2012  10:00:53)       mat2831      12/17/12
                   Energy range:   1.00000E-11  to  1.50000E+02 MeV.
                   particle-production data for protons   being expunged from  28060.84c
                   particle-production data for deuterons being expunged from  28060.84c
                   particle-production data for tritons   being expunged from  28060.84c
                   particle-production data for alphas    being expunged from  28060.84c
                   temperature = 2.1543E-07 adjusted to 2.5300E-08

                    tables from file xdata/endf71x/Ni/28061.714nc

28061.84c  190713  Ni61 ENDF71x (jlconlin)  Ref. see jlconlin (ref 09/10/2012  10:00:53)       mat2834      12/13/12
                   Energy range:   1.00000E-11  to  1.50000E+02 MeV.
                   particle-production data for protons   being expunged from  28061.84c
                   particle-production data for deuterons being expunged from  28061.84c
                   particle-production data for tritons   being expunged from  28061.84c
                   particle-production data for alphas    being expunged from  28061.84c
                   temperature = 2.1543E-07 adjusted to 2.5300E-08

                    tables from file xdata/endf71x/Ni/28062.714nc

28062.84c  169202  Ni62 ENDF71x (jlconlin)  Ref. see jlconlin (ref 09/10/2012  10:00:53)       mat2837      12/17/12
                   Energy range:   1.00000E-11  to  1.50000E+02 MeV.
                   particle-production data for protons   being expunged from  28062.84c
                   particle-production data for deuterons being expunged from  28062.84c
                   particle-production data for tritons   being expunged from  28062.84c
                   particle-production data for alphas    being expunged from  28062.84c
                   probability tables used from 6.0000E-01 to 1.0000E+00 mev.
                   temperature = 2.1543E-07 adjusted to 2.5300E-08

                    tables from file xdata/endf71x/Ni/28064.714nc

28064.84c  152759  Ni64 ENDF71x (jlconlin)  Ref. see jlconlin (ref 09/10/2012  10:00:53)       mat2843      12/17/12
                   Energy range:   1.00000E-11  to  1.50000E+02 MeV.
                   particle-production data for protons   being expunged from  28064.84c
                   particle-production data for deuterons being expunged from  28064.84c
                   particle-production data for tritons   being expunged from  28064.84c
                   particle-production data for alphas    being expunged from  28064.84c
                   temperature = 2.1543E-07 adjusted to 2.5300E-08

                    tables from file xdata/endf71x/Pb/82204.714nc

82204.84c  392627  Pb204 ENDF71x (jlconlin)  Ref. see jlconlin (ref 09/10/2012  10:00:53)      mat8225      12/22/12
                   Energy range:   1.00000E-11  to  2.00000E+02 MeV.
                   particle-production data for protons   being expunged from  82204.84c
                   particle-production data for deuterons being expunged from  82204.84c
                   particle-production data for tritons   being expunged from  82204.84c
                   particle-production data for helions   being expunged from  82204.84c
                   particle-production data for alphas    being expunged from  82204.84c
                   temperature = 2.1543E-07 adjusted to 2.5300E-08

                    tables from file xdata/endf71x/Pb/82206.714nc

82206.84c  801388  Pb206 ENDF71x (jlconlin)  Ref. see jlconlin (ref 09/10/2012  10:00:53)      mat8231      12/22/12
                   Energy range:   1.00000E-11  to  2.00000E+02 MeV.
                   particle-production data for protons   being expunged from  82206.84c
                   particle-production data for deuterons being expunged from  82206.84c
                   particle-production data for tritons   being expunged from  82206.84c
                   particle-production data for helions   being expunged from  82206.84c
                   particle-production data for alphas    being expunged from  82206.84c
                   temperature = 2.1543E-07 adjusted to 2.5300E-08

                    tables from file xdata/endf71x/Pb/82207.714nc

82207.84c  353707  Pb207 ENDF71x (jlconlin)  Ref. see jlconlin (ref 09/10/2012  10:00:53)      mat8234      12/22/12
                   Energy range:   1.00000E-11  to  2.00000E+02 MeV.
                   particle-production data for protons   being expunged from  82207.84c
                   particle-production data for deuterons being expunged from  82207.84c
                   particle-production data for tritons   being expunged from  82207.84c
                   particle-production data for helions   being expunged from  82207.84c
```

```
                    particle-production data for alphas    being expunged from  82207.84c
                    temperature = 2.1543E-07 adjusted to 2.5300E-08

                       tables from file xdata/endf71x/Pb/82208.714nc

  82208.84c  317905  Pb208 ENDF71x (jlconlin)  Ref. see jlconlin (ref 09/10/2012  10:00:53)       mat8237      12/22/12
                    Energy range:   1.00000E-11  to  1.50000E+02 MeV.
                    particle-production data for protons   being expunged from  82208.84c
                    particle-production data for deuterons being expunged from  82208.84c
                    particle-production data for tritons   being expunged from  82208.84c
                    particle-production data for alphas    being expunged from  82208.84c
                    temperature = 2.1543E-07 adjusted to 2.5300E-08

                       tables from file xdata/mcplib84

   1000.84p    1974  Update of MCPLIB04 Photon Compton Broadening Data For MCNP5 see LA-UR-    12-00018       01/03/12
                    Energy range:   1.00000E-03  to  1.00000E+05 MeV.
   6000.84p    3228  Update of MCPLIB04 Photon Compton Broadening Data For MCNP5 see LA-UR-    12-00018       01/03/12
                    Energy range:   1.00000E-03  to  1.00000E+05 MeV.
  14000.84p    4868  Update of MCPLIB04 Photon Compton Broadening Data For MCNP5 see LA-UR-    12-00018       01/03/12
                    Energy range:   1.00000E-03  to  1.00000E+05 MeV.
  24000.84p    5758  Update of MCPLIB04 Photon Compton Broadening Data For MCNP5 see LA-UR-    12-00018       01/03/12
                    Energy range:   1.00000E-03  to  1.00000E+05 MeV.
  25000.84p    5674  Update of MCPLIB04 Photon Compton Broadening Data For MCNP5 see LA-UR-    12-00018       01/03/12
                    Energy range:   1.00000E-03  to  1.00000E+05 MeV.
  26000.84p    5794  Update of MCPLIB04 Photon Compton Broadening Data For MCNP5 see LA-UR-    12-00018       01/03/12
                    Energy range:   1.00000E-03  to  1.00000E+05 MeV.
  28000.84p    5902  Update of MCPLIB04 Photon Compton Broadening Data For MCNP5 see LA-UR-    12-00018       01/03/12
                    Energy range:   1.00000E-03  to  1.00000E+05 MeV.
  82000.84p   10086  Update of MCPLIB04 Photon Compton Broadening Data For MCNP5 see LA-UR-    12-00018       01/03/12
                    Energy range:   1.00000E-03  to  1.00000E+05 MeV.

  total     6172505

  comment.  24 cross sections modified by free gas thermal treatment.

 maximum photon energy set to    100.0 mev (maximum electron energy)

                       tables from file xdata/el03

   1000.03e    2329                                                                                    6/6/98
                    Energy range:   1.00000E-03  to  1.00000E+03 MeV.
   6000.03e    2333                                                                                    6/6/98
                    Energy range:   1.00000E-03  to  1.00000E+03 MeV.
  14000.03e    2339                                                                                    6/6/98
                    Energy range:   1.00000E-03  to  1.00000E+03 MeV.
  24000.03e    2345                                                                                    6/6/98
                    Energy range:   1.00000E-03  to  1.00000E+03 MeV.
  25000.03e    2345                                                                                    6/6/98
                    Energy range:   1.00000E-03  to  1.00000E+03 MeV.
  26000.03e    2345                                                                                    6/6/98
                    Energy range:   1.00000E-03  to  1.00000E+03 MeV.
  28000.03e    2347                                                                                    6/6/98
                    Energy range:   1.00000E-03  to  1.00000E+03 MeV.
  82000.03e    2373                                                                                    6/6/98
                    Energy range:   1.00000E-03  to  1.00000E+03 MeV.

 1particles and energy limits                                                                                print table 101

                       particle      maximum       smallest      largest       always        always
                       cutoff        particle      table         table         use table     use model
   particle type       energy        energy        maximum       maximum       below         above

     1  n    neutron    0.0000E+00    1.0000E+36    2.0000E+01    2.0000E+02    1.0000E+36    1.0000E+36
     2  p    photon     1.0000E-03    1.0000E+02    1.0000E+05    1.0000E+05    1.0000E+36    1.0000E+36
     3  e    electron   1.0000E-03    1.0000E+02    1.0000E+02    1.0000E+02    1.0000E+36    1.0000E+36


  warning.  material        2 has been set to a conductor.

  warning.  material        3 has been set to a conductor.

  warning.  material        4 has been set to a conductor.
  comment.  setting up hash-based fast table search for xsec tables

 ------------------------------------------------------------------------------------------
 =====> Set up arrays for hash-based fast table search for xsec data

    number of hash bins   =     8192
    min hash table energy =  1.00000E-11
    max hash table energy =  2.00000E+02
```

```
          nuclide      ne      emin        emax     ave_bins  min_bins  max_bins
           1001.84c     590 1.00000E-11 2.00000E+01       0.1       0.0       1.0
           1002.84c     583 1.00000E-11 1.50000E+02       0.1       0.0       2.0
           6000.84c    1328 1.00000E-11 1.50000E+02       0.2       0.0       9.0
          14028.84c    8019 1.00000E-11 1.50000E+02       1.0       0.0     115.0
          14029.84c    4979 1.00000E-11 1.50000E+02       0.6       0.0      85.0
          14030.84c    6089 1.00000E-11 1.50000E+02       0.7       0.0      89.0
          24050.84c   29758 1.00000E-11 1.50000E+02       3.6       0.0     176.0
          24052.84c   30705 1.00000E-11 1.50000E+02       3.7       0.0     214.0
          24053.84c   21659 1.00000E-11 1.50000E+02       2.6       0.0     114.0
          24054.84c   14261 1.00000E-11 1.50000E+02       1.7       0.0     155.0
          25055.84c   11703 1.00000E-11 6.00000E+01       1.4       0.0      87.0
          26054.84c   18775 1.00000E-11 1.50000E+02       2.3       0.0     156.0
          26056.84c   26742 1.00000E-11 1.50000E+02       3.3       0.0     164.0
          26057.84c   15731 1.00000E-11 1.50000E+02       1.9       0.0     175.0
          26058.84c   10972 1.00000E-11 2.00000E+01       1.3       0.0     106.0
          28058.84c   43443 1.00000E-11 1.50000E+02       5.3       0.0     285.0
          28060.84c   33910 1.00000E-11 1.50000E+02       4.1       0.0     177.0
          28061.84c   11091 1.00000E-11 1.50000E+02       1.4       0.0      96.0
          28062.84c   11345 1.00000E-11 1.50000E+02       1.4       0.0     134.0
          28064.84c   10310 1.00000E-11 1.50000E+02       1.3       0.0     276.0
          82204.84c   11175 1.00000E-11 2.00000E+02       1.4       0.0     108.0
          82206.84c   33882 1.00000E-11 2.00000E+02       4.1       0.0     256.0
          82207.84c   11334 1.00000E-11 2.00000E+02       1.4       0.0     111.0
          82208.84c    7220 1.00000E-11 1.50000E+02       0.9       0.0     112.0

 ------------------------------------------------------------------------------

 ******************************************************************************************************************************

 dump no.    1 on file HAC_HP_SC-30G3_252Cf_0.r     nps =           0     coll =              0     ctm =        0.00
 nrn =               0

        4 warning messages so far.
 warning.  no photon-production mt found in acegam. zaid =  26056.84c
 nps =    27141026     nrn =                  13 erg = 3.0000E+00

 ******************************************************************************************************************************

 dump no.    2 on file HAC_HP_SC-30G3_252Cf_0.r     nps =   323186056     coll =    26502596325     ctm =     1440.23
 nrn =     467834919751

 ******************************************************************************************************************************

 dump no.    3 on file HAC_HP_SC-30G3_252Cf_0.r     nps =   614221246     coll =    50367516678     ctm =     2880.31
 nrn =     889104062435
 warning.  no reaction mt found. collision resampled. zaid =  26056.84c
 nps =   818273327     nrn =                  19 erg = 8.0000E+00

 ******************************************************************************************************************************

 dump no.    4 on file HAC_HP_SC-30G3_252Cf_0.r     nps =   895132329     coll =    73403005255     ctm =     4320.63
 nrn =    1295733093149

 ******************************************************************************************************************************

 dump no.    5 on file HAC_HP_SC-30G3_252Cf_0.r     nps =  1220682347     coll =   100095115108     ctm =     5760.71
 nrn =    1766909838954

 ******************************************************************************************************************************

 dump no.    6 on file HAC_HP_SC-30G3_252Cf_0.r     nps =  1525439704     coll =   125084263532     ctm =     7201.14
 nrn =    2208025119877

 ******************************************************************************************************************************

 dump no.    7 on file HAC_HP_SC-30G3_252Cf_0.r     nps =  1830484900     coll =   150098473162     ctm =     8641.72
 nrn =    2649588136506
1problem summary

      run terminated when it had used 9600  minutes of computer time.
+                                                                                                      08/29/21 17:52:00

 =====>     304.79 M histories/hr    (based on wall-clock time in mcrun)


      title HP/SC-30G3 with a Concentrated 252Cf Neutron Source - HAC     probid =  08/29/21 11:11:43

 neutron creation     tracks      weight        energy            neutron loss        tracks      weight        energy
```

		(per source particle)	
source	2033074578	1.0000E+00	3.1172E+00
nucl. interaction	0	0.	0.
particle decay	0	0.	0.
weight window	0	0.	0.
cell importance	0	0.	0.
weight cutoff	0	0.	0.
e or t importance	0	0.	0.
dxtran	0	0.	0.
forced collisions	0	0.	0.
exp. transform	0	0.	0.
upscattering	0	0.	6.1536E-07
photonuclear	0	0.	0.
(n,xn)	9481476	4.6636E-03	5.6812E-03
prompt fission	0	0.	0.
delayed fission	0	0.	0.
prompt photofis	0	0.	0.
tabular boundary	0	0.	0.
tabular sampling	0	0.	0.
total	2042556054	1.0047E+00	3.1228E+00

		(per source particle)	
escape	683906531	3.3639E-01	4.1288E-01
energy cutoff	0	0.	0.
time cutoff	0	0.	0.
weight window	0	0.	0.
cell importance	0	0.	0.
weight cutoff	0	0.	0.
e or t importance	0	0.	0.
dxtran	0	0.	0.
forced collisions	0	0.	0.
exp. transform	0	0.	0.
downscattering	0	0.	2.6539E+00
capture	1353909062	6.6594E-01	2.8846E-02
loss to (n,xn)	4740461	2.3317E-03	2.7216E-02
loss to fission	0	0.	0.
nucl. interaction	0	0.	0.
particle decay	0	0.	0.
tabular boundary	0	0.	0.
elastic scatter	0	0.	0.
total	2042556054	1.0047E+00	3.1228E+00

number of neutrons banked		4741015	
neutron tracks per source particle		1.0047E+00	
neutron collisions per source particle		7.0908E+01	
total neutron collisions		144160829333	
net multiplication		1.0023E+00	0.0000

average time of (shakes)		cutoffs	
escape	6.1747E+03	tco	1.0000E+33
capture	1.3619E+04	eco	0.0000E+00
capture or escape	1.1121E+04	wc1	0.0000E+00
any termination	1.1095E+04	wc2	0.0000E+00

photon creation	tracks	weight	energy (per source particle)
source	0	0.	0.
nucl. interaction	0	0.	0.
particle decay	0	0.	0.
weight window	0	0.	0.
cell importance	0	0.	0.
weight cutoff	0	0.	0.
e or t importance	0	0.	0.
dxtran	0	0.	0.
forced collisions	0	0.	0.
exp. transform	0	0.	0.
from neutrons	2440949891	1.2243E+00	3.0040E+00
bremsstrahlung	4204284469	2.1052E+00	1.7735E-01
p-annihilation	569261250	2.8452E-01	1.4539E-01
photonuclear	0	0.	0.
electron x-rays	0	0.	0.
compton fluores	0	0.	0.
muon capt fluores	0	0.	0.
1st fluorescence	2901168004	1.4556E+00	7.2256E-02
2nd fluorescence	474950728	2.3858E-01	2.6882E-03
cerenkov	0	0.	0.
(gamma,xgamma)	0	0.	0.
tabular sampling	0	0.	0.
prompt photofis	0	0.	0.
total	10590614342	5.3082E+00	3.4017E+00

photon loss	tracks	weight	energy (per source particle)
escape	157478484	8.0204E-02	1.4484E-01
energy cutoff	1061	5.5091E-07	4.2450E-04
time cutoff	0	0.	0.
weight window	0	0.	0.
cell importance	0	0.	0.
weight cutoff	0	0.	0.
e or t importance	0	0.	0.
dxtran	0	0.	0.
forced collisions	0	0.	0.
exp. transform	0	0.	0.
compton scatter	0	0.	1.9035E+00
capture	10148504172	5.0858E+00	6.5249E-01
pair production	284630625	1.4226E-01	7.0044E-01
photonuclear abs	0	0.	0.
loss to photofis	0	0.	0.
total	10590614342	5.3082E+00	3.4017E+00

number of photons banked		-900489313	
photon tracks per source particle		5.2092E+00	
photon collisions per source particle		1.1090E+01	
total photon collisions		22547069686	

average time of (shakes)		cutoffs	
escape	1.0792E+04	tco	1.0000E+33
capture	6.9760E+03	eco	1.0000E-03
capture or escape	7.0352E+03	wc1	0.0000E+00
any termination	7.1523E+03	wc2	0.0000E+00

computer time so far in this run 9600.50 minutes
computer time in mcrun 9600.19 minutes
source particles per minute 2.1177E+05
random numbers generated 2942781100613

maximum number ever in bank 46
bank overflows to backup file 0

most random numbers used was 45974 in history 1047247824

warning. random number period exceeded. decrease stride.

range of sampled source weights = 1.0000E+00 to 1.0000E+00

neutron reaction mt loop failed 2 times.

neutron-induced photon production mt loop failed 65 times.

number of histories processed by each thread

84645960	85438011	85079714	85357919	84646597	84895613	85017058	85077777	84749104	84604872
84236851	84607752	84756563	84626736	84930480	84623769	84826210	84718752	84731480	84856004
84964207	83421924	84236175	84025050						

1neutron activity in each cell print table 126

	cell	tracks entering	population	collisions	collisions * weight (per history)	number weighted energy	flux weighted energy	average track weight (relative)	average track mfp (cm)
1	1	0	0	0	0.0000E+00	0.0000E+00	0.0000E+00	0.0000E+00	0.0000E+00
2	2	2307754045	2033226974	1650092846	8.1162E-01	3.5963E-03	2.3981E+00	1.0000E+00	3.1855E+00
3	3	11005586	5402926	28502779	1.4020E-02	9.2593E-04	6.0883E-01	1.0000E+00	4.8409E+00
4	4	2868290	1552760	5160609	2.5383E-03	1.8440E-03	6.5578E-01	1.0000E+00	4.1829E+00
5	5	2996465	1669591	2514937	1.2370E-03	2.6225E-03	6.1715E-01	1.0000E+00	4.2897E+00
6	6	2235349	1635586	5048955	2.4834E-03	4.1607E-03	6.2766E-01	1.0000E+00	5.6384E+00
7	7	3096831175	1420735462	3863812092	1.9005E+00	5.9751E-04	1.0280E+00	1.0000E+00	3.5255E+00
8	8	2040041339	1184385006	7067749918	3.4764E+00	7.0240E-04	8.8932E-01	1.0000E+00	4.0674E+00
9	9	1285727330	852831841	1303179382	6.4099E-01	1.1539E-03	8.8584E-01	1.0000E+00	4.2287E+00
10	10	4536267	2989646	10620916	5.2241E-03	3.0422E-03	5.7314E-01	1.0000E+00	5.5195E+00
11	11	4071920	2579670	10454821	5.1424E-03	4.9863E-03	5.7144E-01	1.0000E+00	6.0244E+00
12	12	2359725	1335982	2745688	1.3505E-03	1.4060E-03	5.0842E-01	1.0000E+00	4.6709E+00
13	13	5244133	2731504	15514088	7.6309E-03	4.5676E-04	6.0392E-01	1.0000E+00	3.9992E+00
14	14	2615064	1361818	5923995	2.9138E-03	1.7110E-03	6.1119E-01	1.0000E+00	4.0708E+00
15	15	975206	770209	679248	3.3410E-04	6.2477E-03	5.5605E-01	1.0000E+00	4.3843E+00
16	16	730416	651471	193871	9.5359E-05	4.9148E-03	5.7335E-01	1.0000E+00	6.1199E+00
17	17	3440843524	2034767376	129332224936	6.3614E+01	9.2736E-05	5.1400E-01	1.0000E+00	1.0504E+00
18	18	2094771	1073824	0	0.0000E+00	2.1624E-03	6.3588E-01	1.0000E+00	0.0000E+00
19	19	2798911	1476580	0	0.0000E+00	2.9217E-03	6.1176E-01	1.0000E+00	0.0000E+00
20	20	1457474597	852833470	0	0.0000E+00	8.4494E-04	8.4216E-01	1.0000E+00	0.0000E+00
21	21	479830	368184	0	0.0000E+00	6.0015E-03	5.3609E-01	1.0000E+00	0.0000E+00
22	22	703782	589389	0	0.0000E+00	5.3776E-03	5.6977E-01	1.0000E+00	0.0000E+00
23	23	2806593	1224469	0	0.0000E+00	1.4646E-03	6.3637E-01	1.0000E+00	0.0000E+00
24	24	1050726952	757059578	0	0.0000E+00	4.0511E-03	6.1070E-01	1.0000E+00	0.0000E+00
25	201	915025572	757104085	856410252	4.2124E-01	2.4439E-03	1.0196E+00	1.0000E+00	3.4655E+00
26	202	1084586397	757072004	0	0.0000E+00	1.4003E-03	7.5526E-01	1.0000E+00	0.0000E+00
27	203	683906531	683906531	0	0.0000E+00	4.2957E-03	1.1882E+00	1.0000E+00	0.0000E+00
28	204	683906531	683906531	0	0.0000E+00	4.2549E-03	1.1994E+00	1.0000E+00	0.0000E+00
29	205	684177774	683906531	0	0.0000E+00	4.1279E-03	1.2237E+00	1.0000E+00	0.0000E+00
30	301	271243	271243	0	0.0000E+00	3.1297E-03	1.2517E+00	1.0000E+00	0.0000E+00
	total	18779795318	12729420241	144160829333	7.0908E+01				

1photon activity in each cell print table 126

	cell	tracks entering	population	collisions	collisions * weight (per history)	number weighted energy	flux weighted energy	average track weight (relative)	average track mfp (cm)
1	1	0	0	0	0.0000E+00	0.0000E+00	0.0000E+00	0.0000E+00	0.0000E+00
2	2	51035602	57628225	7372921	3.6678E-03	1.7944E+00	1.7944E+00	1.0104E+00	1.7954E+01
3	3	90463423	121520724	310467576	1.5347E-01	1.2659E+00	1.2659E+00	1.0047E+00	1.8947E+00
4	4	20266924	66613356	118283165	5.8489E-02	1.7537E+00	1.7537E+00	1.0050E+00	1.3289E+00
5	5	3141452	8300457	13305008	6.5954E-03	1.7077E+00	1.7077E+00	1.0073E+00	1.3484E+00
6	6	1314907	2327645	5418113	2.6947E-03	1.3203E+00	1.3203E+00	1.0104E+00	1.9938E+00
7	7	1421851306	2219029206	3338769379	1.6555E+00	1.7326E+00	1.7326E+00	1.0081E+00	2.1743E+00
8	8	1183105778	5777237939	10506276671	5.2779E+00	1.7731E+00	1.7731E+00	1.0218E+00	1.3183E+00
9	9	141178822	387172238	494640174	2.4968E-01	1.8696E+00	1.8696E+00	1.0254E+00	2.1868E+00
10	10	2780049	4836583	12166162	6.0425E-03	1.3487E+00	1.3487E+00	1.0093E+00	1.9419E+00
11	11	2733904	4675657	12684691	6.3104E-03	1.2680E+00	1.2680E+00	1.0108E+00	1.9144E+00
12	12	5852506	6964625	11588935	5.7275E-03	1.3172E+00	1.3172E+00	1.0046E+00	1.9578E+00
13	13	84899447	111613983	276255764	1.3654E-01	1.2548E+00	1.2548E+00	1.0046E+00	1.8804E+00
14	14	18789867	63646283	114850091	5.6803E-02	1.7527E+00	1.7527E+00	1.0052E+00	1.3285E+00
15	15	571848	1407782	2261716	1.1254E-03	1.7176E+00	1.7176E+00	1.0108E+00	1.2599E+00
16	16	219123	243236	116570	5.8619E-05	1.4991E+00	1.4991E+00	1.0189E+00	2.1005E+00
17	17	666493443	1550930051	6867492721	3.3977E+00	1.0842E+00	1.0842E+00	1.0053E+00	1.3200E+01
18	18	2200419	2145342	0	0.0000E+00	1.7085E+00	1.7085E+00	1.0066E+00	0.0000E+00
19	19	1547653	1321695	0	0.0000E+00	1.4895E+00	1.4895E+00	1.0088E+00	0.0000E+00
20	20	200386627	179991105	0	0.0000E+00	1.8933E+00	1.8933E+00	1.0253E+00	0.0000E+00
21	21	412550	371007	0	0.0000E+00	1.2894E+00	1.2894E+00	1.0066E+00	0.0000E+00
22	22	200514	188016	0	0.0000E+00	1.5556E+00	1.5556E+00	1.0173E+00	0.0000E+00
23	23	20737982	19472197	0	0.0000E+00	1.3918E+00	1.3918E+00	1.0047E+00	0.0000E+00
24	24	220729124	187469538	0	0.0000E+00	1.3509E+00	1.3509E+00	1.0208E+00	0.0000E+00
25	201	166442868	333107075	455120029	2.3252E-01	1.7414E+00	1.7414E+00	1.0383E+00	2.0723E+00
26	202	235652886	195496052	0	0.0000E+00	1.5248E+00	1.5248E+00	1.0345E+00	0.0000E+00
27	203	157478484	157478484	0	0.0000E+00	1.8535E+00	1.8535E+00	1.0371E+00	0.0000E+00
28	204	157478484	157478484	0	0.0000E+00	1.8408E+00	1.8408E+00	1.0366E+00	0.0000E+00
29	205	157532084	157478484	0	0.0000E+00	1.8075E+00	1.8075E+00	1.0356E+00	0.0000E+00
30	301	53600	53600	0	0.0000E+00	1.6795E+00	1.6795E+00	1.0335E+00	0.0000E+00
	total	5015551676	11776199069	22547069686	1.1251E+01				

1summary of photons produced in neutron collisions in the tabular range

production by cell of photons created with energies above local photon energy cutoffs

cell	number of photons	weight per source neut	energy per source neut	avg photon energy	mev/gm per source neut	weight/neut collision	energy/neut collision

1	1	0	0.00000E+00	0.00000E+00	0.00000E+00	0.00000E+00	0.00000E+00	0.00000E+00
2	2	8175770	4.02138E-03	1.32613E-02	3.29769E+00	1.09614E-03	4.95473E-03	1.63392E-02
3	3	3001631	1.49710E-03	5.11483E-03	3.41649E+00	3.49771E-08	1.06786E-01	3.64835E-01
4	4	193688	1.04152E-04	1.27614E-04	1.22526E+00	1.38666E-09	4.10317E-02	5.02746E-02
5	5	79594	4.22666E-05	4.94623E-05	1.17025E+00	9.48261E-10	3.41683E-02	3.99853E-02
6	6	321801	1.61423E-04	3.70800E-04	2.29708E+00	5.15565E-09	6.50005E-02	1.49311E-01
7	7	700594869	3.48527E-01	1.17071E+00	3.35903E+00	9.30397E-06	1.83389E-01	6.16010E-01
8	8	457830965	2.40533E-01	3.02984E-01	1.25964E+00	2.47708E-07	6.91905E-02	8.71549E-02
9	9	174623251	8.67750E-02	2.58443E-01	2.97831E+00	1.40827E-06	1.35377E-01	4.03193E-01
10	10	675943	3.37086E-04	8.55644E-04	2.53835E+00	1.27503E-08	6.45256E-02	1.63789E-01
11	11	585045	2.93575E-04	6.48497E-04	2.20897E+00	4.40004E-09	5.70895E-02	1.26109E-01
12	12	192268	9.60974E-05	3.04373E-04	3.16734E+00	2.39286E-08	7.11564E-02	2.25376E-01
13	13	2055052	1.02531E-03	3.87013E-03	3.77461E+00	6.23436E-08	1.34363E-01	5.07169E-01
14	14	204224	1.10009E-04	1.35581E-04	1.23245E+00	1.26964E-09	3.77545E-02	4.65305E-02
15	15	15836	8.26501E-06	9.18342E-06	1.11112E+00	3.92665E-10	2.47382E-02	2.74871E-02
16	16	11388	5.69784E-06	1.23690E-05	2.17082E+00	2.98490E-09	5.97517E-02	1.29710E-01
17	17	983764120	4.83880E-01	1.10166E+00	2.27673E+00	1.10166E+00	7.60649E-03	1.73179E-02
18	18	0	0.00000E+00	0.00000E+00	0.00000E+00	0.00000E+00	0.00000E+00	0.00000E+00
19	19	0	0.00000E+00	0.00000E+00	0.00000E+00	0.00000E+00	0.00000E+00	0.00000E+00
20	20	0	0.00000E+00	0.00000E+00	0.00000E+00	0.00000E+00	0.00000E+00	0.00000E+00
21	21	0	0.00000E+00	0.00000E+00	0.00000E+00	0.00000E+00	0.00000E+00	0.00000E+00
22	22	0	0.00000E+00	0.00000E+00	0.00000E+00	0.00000E+00	0.00000E+00	0.00000E+00
23	23	0	0.00000E+00	0.00000E+00	0.00000E+00	0.00000E+00	0.00000E+00	0.00000E+00
24	24	0	0.00000E+00	0.00000E+00	0.00000E+00	0.00000E+00	0.00000E+00	0.00000E+00
25	201	108623387	5.69148E-02	1.45460E-01	2.55576E+00	9.96064E-08	1.35113E-01	3.45316E-01
26	202	0	0.00000E+00	0.00000E+00	0.00000E+00	0.00000E+00	0.00000E+00	0.00000E+00
27	203	0	0.00000E+00	0.00000E+00	0.00000E+00	0.00000E+00	0.00000E+00	0.00000E+00
28	204	0	0.00000E+00	0.00000E+00	0.00000E+00	0.00000E+00	0.00000E+00	0.00000E+00
29	205	0	0.00000E+00	0.00000E+00	0.00000E+00	0.00000E+00	0.00000E+00	0.00000E+00
30	301	0	0.00000E+00	0.00000E+00	0.00000E+00	0.00000E+00	0.00000E+00	0.00000E+00
31	999	0	0.00000E+00	0.00000E+00	0.00000E+00	0.00000E+00	0.00000E+00	0.00000E+00
	total	2440948832	1.22433E+00	3.00402E+00	2.45360E+00			

1energy distribution of photons produced in neutron collisions in the tabular range

all sampled photons from neutron collisions in the tabular range, without regard to energy cutoffs

energy interval	number of photons	number frequency	cum number distribution	weight of photons	weight frequency	cum weight distribution
20.000	104	4.26064E-08	4.26064E-08	5.78489E-08	4.72493E-08	4.72493E-08
15.000	909	3.72396E-07	4.15002E-07	5.07419E-07	4.14445E-07	4.61695E-07
10.000	179920	7.37090E-05	7.41240E-05	1.07944E-04	8.81652E-05	8.86269E-05
9.000	12119465	4.96506E-03	5.03918E-03	6.04701E-03	4.93903E-03	5.02765E-03
8.000	6566555	2.69016E-03	7.72935E-03	3.63379E-03	2.96797E-03	7.99563E-03
7.000	190746973	7.81446E-02	8.58739E-02	9.41896E-02	7.69314E-02	8.49270E-02
6.000	43603564	1.78634E-02	1.03737E-01	2.19742E-02	1.79479E-02	1.02875E-01
5.000	45932324	1.88174E-02	1.22555E-01	2.32742E-02	1.90097E-02	1.21885E-01
4.000	82018695	3.36011E-02	1.56156E-01	4.12015E-02	3.36522E-02	1.55537E-01
3.000	62358094	2.55467E-02	1.81702E-01	3.20269E-02	2.61587E-02	1.81695E-01
2.000	1102886161	4.51827E-01	6.33529E-01	5.45554E-01	4.45593E-01	6.27288E-01
1.000	229695318	9.41008E-02	7.27630E-01	1.17402E-01	9.58907E-02	7.23179E-01
0.500	537184744	2.20072E-01	9.47702E-01	2.73268E-01	2.23197E-01	9.46376E-01
0.100	105367630	4.31667E-02	9.90869E-01	5.39467E-02	4.40621E-02	9.90438E-01
0.010	19259006	7.88996E-03	9.98759E-01	1.01193E-02	8.26515E-03	9.98703E-01
0.000	3030429	1.24150E-03	1.00000E+00	1.58782E-03	1.29689E-03	1.00000E+00
	<-------- energy interval containing the global photon energy cutoff, 1.000E-03 MeV					
total	2440949891	1.00000E+00		1.22433E+00	1.00000E+00	

warning. 1059 photons from neutron collisions were created below a local photon energy cutoff and were not followed.

1tally 4 nps = 2033074578
+ Package 1-Meter Neutron Dose Rate (mrem/hr) @ Z = 111.12500
tally type 4 track length estimate of particle flux.
particle(s): neutrons
this tally is modified by dose function DE4 and DF4.

volumes
cell: 301
2.02683E+00

cell 301
5.54561E-07 0.0023

==========

results of 10 statistical checks for the estimated answer for the tally fluctuation chart (tfc) bin of tally 4

tfc bin behavior	--mean-- behavior	---------relative error--------- value	decrease	decrease rate	----variance of the variance---- value	decrease	decrease rate	--figure of merit-- value	behavior	-pdf- slope
desired	random	<0.10	yes	1/sqrt(nps)	<0.10	yes	1/nps	constant	random	>3.00
observed	random	0.00	yes	yes	0.00	yes	yes	constant	random	1.62
passed?	yes	yes	yes	yes	yes	yes	yes	yes	yes	no

warning. the tally in the tally fluctuation chart bin did not pass 1 of the 10 statistical checks.

1analysis of the results in the tally fluctuation chart bin (tfc) for tally 4 with nps = 2033074578 print table 160

normed average tally per history = 5.54561E-07 unnormed average tally per history = 1.12400E-06
estimated tally relative error = 0.0023 estimated variance of the variance = 0.0000
relative error from zero tallies = 0.0019 relative error from nonzero scores = 0.0012

number of nonzero history tallies = 271243 efficiency for the nonzero tallies = 0.0001
history number of largest tally = 1091724254 largest unnormalized history tally = 2.17149E-02
(largest tally)/(average tally) = 1.93193E+04 (largest tally)/(avg nonzero tally)= 2.57749E+00

(confidence interval shift)/mean = 0.0000 shifted confidence interval center = 5.54562E-07

if the largest history score sampled so far were to occur on the next history, the tfc bin quantities would change as follows:

estimated quantities	value at nps	value at nps+1	value(nps+1)/value(nps)-1.
mean	5.54561E-07	5.54566E-07	0.000010
relative error	2.28417E-03	2.28417E-03	-0.000001
variance of the variance	6.03118E-06	6.03127E-06	0.000015
shifted center	5.54562E-07	5.54562E-07	0.000000
figure of merit	1.99648E+01	1.99648E+01	0.000002

the estimated inverse power slope of the 19 largest tallies starting at 2.11742E-02 is 1.6174
the empirical history score probability density function appears to be increasing at the largest history scores:
please examine. see print table 161.
the large score tail of the empirical history score probability density function appears to have no unsampled regions.

fom = (histories/minute)*(f(x) signal-to-noise ratio)**2 = (2.118E+05)*(9.709E-03)**2 = (2.118E+05)*(9.427E-05) = 1.996E+01

1unnormed tally density for tally 4 nonzero tally mean(m) = 8.425E-03 nps = 2033074578 print table 161

abscissa tally	number	ordinate num den	log	log plot of tally probability density function in tally fluctuation chart bin(d=decade,slope= 1.6) den:d
7.94-07	1	3.01-03	-2.521	**********
1.00-06	0	0.00+00	0.000	
1.26-06	0	0.00+00	0.000	
1.58-06	0	0.00+00	0.000	
2.00-06	1	1.20-03	-2.921	**********
2.51-06	0	0.00+00	0.000	
3.16-06	1	7.56-04	-3.121	**********
3.98-06	1	6.01-04	-3.221	**********
5.01-06	0	0.00+00	0.000	
6.31-06	2	7.58-04	-3.120	**********
7.94-06	1	3.01-04	-3.521	**********
1.00-05	1	2.39-04	-3.621	**********
1.26-05	2	3.80-04	-3.420	**********
1.58-05	6	9.05-04	-3.043	**********
2.00-05	7	8.39-04	-3.076	**********
2.51-05	8	7.62-04	-3.118	**********
3.16-05	4	3.03-04	-3.519	**********
3.98-05	8	4.81-04	-3.318	**********
5.01-05	10	4.77-04	-3.321	**********
6.31-05	9	3.41-04	-3.467	**********
7.94-05	17	5.12-04	-3.291	**********
1.00-04	23	5.50-04	-3.260	**********
1.26-04	28	5.32-04	-3.274	**********
1.58-04	33	4.98-04	-3.303	**********
2.00-04	38	4.55-04	-3.342	**********
2.51-04	58	5.52-04	-3.258	**********
3.16-04	69	5.22-04	-3.282	**********
3.98-04	29528	1.77-01	-0.751	**********
5.01-04	23179	1.11-01	-0.956	**********
6.31-04	1784	6.76-03	-2.170	**********
7.94-04	3246	9.77-03	-2.010	**********
1.00-03	1053	2.52-03	-2.599	**********
1.26-03	2391	4.54-03	-2.343	**********
1.58-03	2656	4.01-03	-2.397	**********

```
 2.00-03   3439 4.12-03  -2.385 **********************|**********************|******************    |                    |
 2.51-03   3642 3.47-03  -2.460 **********************|**********************|*****************     |                    |
 3.16-03   4881 3.69-03  -2.433 **********************|**********************|******************    |                    |
 3.98-03   5382 3.23-03  -2.490 **********************|**********************|*****************     |                    |
 5.01-03   5968 2.85-03  -2.545 **********************|**********************|***************       |                    |
 6.31-03   9081 3.44-03  -2.463 **********************|**********************|*****************     |                    |
 7.94-03  10594 3.19-03  -2.496 **********************|**********************|***************       |                    |
 1.00-02  19642 4.70-03  -2.328 mmmmmmmmmmmmmmmmmmmmmmm|mmmmmmmmmmmmmmmmmmmmmmm|mmmmmmmmmmmmmmmmmmmm  |                    |
 1.26-02  28281 5.37-03  -2.270 **********************|**********************|********************* |                    |
 1.58-02 115804 1.75-02  -1.758 **********************|**********************|*********************|*********          |
 2.00-02     64 7.67-06  -5.115 *                     |                      |                     |                    |
 2.51-02    300 2.86-05  -4.544 **************        |s                     |                     |                    |
  total  271243 1.33-04         d----------------------d----------------------d---------------------d--------------------d---------

1tally       14        nps =  2033074578
+                                Package 1-Meter Gamma Dose Rate (mrem/hr) @ Z = 111.12500
          tally type 4    track length estimate of particle flux.
          particle(s): photons
          this tally is modified by dose function DE14 and DF14.

          volumes
                 cell:      301
                      2.02683E+00

 cell  301
                3.23972E-09 0.0058


 ================================================================================================================================

          results of 10 statistical checks for the estimated answer for the tally fluctuation chart (tfc) bin of tally       14

 tfc bin     --mean--      ---------relative error---------      ----variance of the variance----      --figure of merit--     -pdf-
 behavior    behavior      value   decrease   decrease rate      value   decrease   decrease rate      value     behavior     slope

 desired      random       <0.10      yes      1/sqrt(nps)       <0.10      yes        1/nps          constant    random      >3.00
 observed     random        0.01      yes          yes            0.00      yes         yes           constant    random      10.00
 passed?        yes          yes      yes          yes             yes      yes         yes              yes        yes         yes

 ================================================================================================================================


 this tally meets the statistical criteria used to form confidence intervals: check the tally fluctuation chart to verify.
 the results in other bins associated with this tally may not meet these statistical criteria.

 ----- estimated confidence intervals:  -----

 estimated asymmetric confidence interval(1,2,3 sigma): 3.2209E-09 to 3.2587E-09; 3.2019E-09 to 3.2777E-09; 3.1830E-09 to 3.2966E-09
 estimated  symmetric confidence interval(1,2,3 sigma): 3.2208E-09 to 3.2587E-09; 3.2018E-09 to 3.2776E-09; 3.1829E-09 to 3.2965E-09

1analysis of the results in the tally fluctuation chart bin (tfc) for tally 14 with nps = 2033074578        print table 160


 normed average tally per history  = 3.23972E-09         unnormed average tally per history  = 6.56636E-09
 estimated tally relative error    = 0.0058             estimated variance of the variance  = 0.0001
 relative error from zero tallies  = 0.0043             relative error from nonzero scores  = 0.0039

 number of nonzero history tallies =       53417        efficiency for the nonzero tallies  = 0.0000
 history number of largest  tally  =   206186010        largest  unnormalized history tally = 1.85739E-03
 (largest  tally)/(average tally)  = 2.82865E+05        (largest  tally)/(avg nonzero tally)= 7.43199E+00

 (confidence interval shift)/mean  = 0.0000             shifted confidence interval center  = 3.23980E-09


 if the largest  history score sampled so far were to occur on the next history, the tfc bin quantities would change as follows:

      estimated quantities          value at nps          value at nps+1          value(nps+1)/value(nps)-1.

      mean                           3.23972E-09            3.24017E-09                  0.000139
      relative error                 5.84651E-03            5.84735E-03                  0.000144
      variance of the variance       8.64087E-05            8.66313E-05                  0.002576
      shifted center                 3.23980E-09            3.23980E-09                  0.000000
      figure of merit                3.04738E+00            3.04651E+00                 -0.000288

 the estimated slope of the 200 largest  tallies starting at  1.16074E-03 appears to be decreasing at least exponentially.
 the empirical history score probability density function appears to be increasing at the largest  history scores:
 please examine. see print table 161.
 the large score tail of the empirical history score probability density function appears to have no unsampled regions.

 fom = (histories/minute)*(f(x) signal-to-noise ratio)**2 = (2.118E+05)*( 3.793E-03)**2 = (2.118E+05)*(1.439E-05) = 3.047E+00
```

```
1status of the statistical checks used to form confidence intervals for the mean for each tally bin


 tally   result of statistical checks for the tfc bin (the first check not passed is listed) and error magnitude check for all bins

        4   missed  1 of 10 tfc bin checks: the slope of decrease of largest tallies is less than the minimum acceptable value of 3.0
          passed all bin error check:     1 tally bins all have relative errors less than 0.10 with no zero bins

       14   passed the 10 statistical checks for the tally fluctuation chart bin result
          passed all bin error check:     1 tally bins all have relative errors less than 0.10 with no zero bins


 the 10 statistical checks are only for the tally fluctuation chart bin and do not apply to other tally bins.

 warning.       1 of the     2 tally fluctuation chart bins did not pass all 10 statistical checks.
1tally fluctuation charts

                          tally        4                          tally       14
         nps      mean     error   vov  slope    fom      mean     error   vov  slope    fom
    131072000   5.5824E-07 0.0090 0.0001  2.0      21   3.2913E-09 0.0231 0.0014  1.6 3.2E+00
    262144000   5.5493E-07 0.0064 0.0000  1.7      21   3.2564E-09 0.0163 0.0007  2.2 3.2E+00
    393216000   5.5100E-07 0.0052 0.0000  1.5      21   3.2540E-09 0.0133 0.0004  4.2 3.2E+00
    524288000   5.5226E-07 0.0045 0.0000  1.4      20   3.2545E-09 0.0115 0.0003  3.6 3.2E+00
    655360000   5.5355E-07 0.0040 0.0000  1.4      20   3.2481E-09 0.0102 0.0003  2.3 3.1E+00
    786432000   5.5361E-07 0.0037 0.0000 10.0      19   3.2505E-09 0.0094 0.0002  1.9 3.0E+00
    917504000   5.5422E-07 0.0034 0.0000 10.0      20   3.2366E-09 0.0087 0.0002  8.3 3.0E+00
   1048576000   5.5483E-07 0.0032 0.0000 10.0      20   3.2405E-09 0.0081 0.0002 10.0 3.0E+00
   1179648000   5.5478E-07 0.0030 0.0000 10.0      20   3.2402E-09 0.0077 0.0001 10.0 3.0E+00
   1310720000   5.5461E-07 0.0028 0.0000 10.0      20   3.2345E-09 0.0073 0.0001 10.0 3.0E+00
   1441792000   5.5516E-07 0.0027 0.0000 10.0      20   3.2361E-09 0.0069 0.0001 10.0 3.1E+00
   1572864000   5.5411E-07 0.0026 0.0000  7.8      20   3.2345E-09 0.0066 0.0001 10.0 3.1E+00
   1703936000   5.5391E-07 0.0025 0.0000  2.7      20   3.2371E-09 0.0064 0.0001 10.0 3.1E+00
   1835008000   5.5429E-07 0.0024 0.0000  3.1      20   3.2372E-09 0.0062 0.0001 10.0 3.0E+00
   1966080000   5.5448E-07 0.0023 0.0000  1.6      20   3.2375E-09 0.0059 0.0001 10.0 3.0E+00
   2033074578   5.5456E-07 0.0023 0.0000  1.6      20   3.2397E-09 0.0058 0.0001 10.0 3.0E+00

 ************************************************************************************************************************************

 dump no.    8 on file HAC_HP_SC-30G3_252Cf_0.r     nps =  2033074578     coll =   166707899019     ctm =     9600.19
 nrn =     2942781100613
 tally data written to file HAC_HP_SC-30G3_252Cf_0.m

        10 warning messages so far.


 run terminated when it had used 9600  minutes of computer time.

 computer time = 9600.51 minutes

 mcnp     version 6     02/20/18                    08/29/21 17:52:00                    probid =  08/29/21 11:11:43
```

3. SC-55G1 NCT Model with ^{252}Cf – Polyethylene with Secondary Gammas

```
         Code Name & Version = MCNP_6.20, 6.2.0

    _/      _/      _/_/_/      _/      _/      _/_/_/        _/_/_/
   _/_/  _/_/     _/           _/_/  _/_/     _/    _/     _/
  _/  _/  _/     _/           _/  _/  _/     _/_/_/      _/_/_/
 _/      _/     _/           _/    _/_/     _/           _/    _/
_/      _/      _/_/_/      _/      _/     _/           _/_/

  +-------------------------------------------------------------------+
  | Copyright (2018).  Los Alamos National Security, LLC.  All rights    !
  | reserved.                                                            !
  |  This material was produced under U.S. Government contract           !
  | DE-AC52-06NA25396 for Los Alamos National Laboratory, which is       !
  | operated by Los Alamos National Security, LLC for the U.S.           !
  | Department of Energy. The Government is granted for itself and       !
  | others acting on its behalf a paid-up, nonexclusive, irrevocable     !
  | worldwide license in this material to reproduce, prepare derivative  !
  | works, and perform publicly and display publicly. Beginning five (5) !
  | years after February 14, 2018, subject to additional five-year       !
  | worldwide renewals, the Government is granted for itself and others  !
  | acting on its behalf a paid-up, nonexclusive, irrevocable worldwide  !
  | license in this material to reproduce, prepare derivative works,     !
  | distribute copies to the public, perform publicly and display        !
  | publicly, and to permit others to do so. NEITHER THE UNITED STATES   !
  | NOR THE UNITED STATES DEPARTMENT OF ENERGY, NOR LOS ALAMOS NATIONAL  !
  | SECURITY, LLC, NOR ANY OF THEIR EMPLOYEES, MAKES ANY WARRANTY,       !
```

```
  | EXPRESS OR IMPLIED, OR ASSUMES ANY LEGAL LIABILITY OR RESPONSIBILITY  !
  | FOR THE ACCURACY, COMPLETENESS, OR USEFULNESS OF ANY INFORMATION,     !
  | APPARATUS, PRODUCT, OR PROCESS DISCLOSED, OR REPRESENTS THAT ITS USE  !
  | WOULD NOT INFRINGE PRIVATELY OWNED RIGHTS.                           !
  +-----------------------------------------------------------------------+

1mcnp     version 6     ld=02/20/18                    08/29/21 17:56:08
 ***********************************************************************                probid =  08/29/21 17:56:08
 i=NCT_HP_SC-55G1_252Cf_0.i name=NCT_HP_SC-55G1_252Cf_0. tasks 24


  warning.  universe map (print table 128) disabled.

  comment.  Physics models disabled.
        1-       title HP/SC-55G1 with a Concentrated 252Cf Neutron Source - NCT
        2-       c
        3-       c    Universe Fill Boundary
        4-       c
        5-          1    0           -97   98  -99     fill=1     $Shielded Container 1
        6-                           imp:n=1   imp:p=1   trcl=1
        7-          2    0           -97   98  -99     fill=1     $Shielded Container 2
        8-                           imp:n=1   imp:p=1   trcl=2
        9-       c
       10-       c    Payload Cell                                 $Material Density 100%
       11-       c
       12-          3    1   -0.9400   -1    2   -3               $Payload
       13-                           imp:n=1   imp:p=1      u=1
       14-       c
       15-       c    Shielded Container Cells                     $Material Density 100%
       16-       c
       17-          4    2   -7.8526  -11   12  -13  -14          $Base Steel
       18-                           imp:n=1   imp:p=1      u=1
       19-          5    2   -7.8526   13   15  -16  -18   20     $Sidewall Steel
       20-                           (-15  :17  :18  :19)
       21-                           imp:n=1   imp:p=1      u=1
       22-          6    2   -7.8526  -24   25  -26  -28          $Lid Steel
       23-                           ((18 :-25 :-27)
       24-                            (18  :27 :-30 :-31)
       25-                           (-18 :-27  :32  :33)
       26-                           (-25  :27 :-29))
       27-                           imp:n=1   imp:p=1      u=1
       28-       c
       29-       c    Cavity (Void) Cells
       30-       c
       31-          7    1   -0.9400 ((13  -15  -25):             $Payload Cavity
       32-                            (15  -17  -19  -25):
       33-                            (17  -18  -20):
       34-                           (-17  -18   30   31):
       35-                           (-17   25   29):
       36-                           (-17   27  -29  -31):
       37-                            (18   27  -32  -33))
       38-                              (1  :-2   :3)
       39-                           imp:n=1   imp:p=1      u=1
       40-          8    0             (11 :-12  :13  :14)         $Exterior Void
       41-                           (-13  :16  :18)
       42-                           (-18  :24  :26  :28)
       43-                           imp:n=1   imp:p=1      u=1
       44-       c
       45-       c    HalfPACT Package Cells                       $Material Density 100%
       46-       c
       47-         201    4   -8.0128 (201 -202  204 -205):        $HalfPACT ICV/OCV Steel Structure
       48-                           (-202  203 -204):
       49-                           (-202  205 -206)
       50-                           imp:n=1   imp:p=1
       51-         202    5   -0.1322 (202  203 -206 -211):        $HalfPACT OCA Polyurethane Foam
       52-                           (-203 -211  214):
       53-                            (206 -211 -215)
       54-                           imp:n=1   imp:p=1
       55-         203    4   -8.0128 (211 -212  214 -215):        $HalfPACT OCA Steel Structure
       56-                           (-212  213 -214):
       57-                           (-212  215 -216)
       58-                           imp:n=1   imp:p=1
       59-       c
       60-       c    HalfPACT Package Void Cells
       61-       c
       62-         204    0            -201  204 -205              $HalfPACT ICV Interior Void
       63-                           #1   #2
       64-                           imp:n=1   imp:p=1
       65-         205    0          ((-999  212  213 -216):       $HalfPACT OCA Exterior Void
       66-                           (-999 -213):
       67-                           (-999  216))
```

```
                        (-301 :302:-305 :306)
                        (-303 :304:-305 :306)
                        imp:n=1   imp:p=1
c
c    HalfPACT Package Surface and 2-meter Tally Cells
c
  301    0            301 -302  305 -306          $Package Side Middle @ Surface
                      imp:n=1   imp:p=1
  302    0            303 -304  305 -306          $Package Side Middle @ 2-meters
                      imp:n=1   imp:p=1
c
c    World Cell
c
  999    0            999
                      imp:n=0   imp:p=0

c
c    Payload Surfaces
c
    1       cz    1.27000                    $Radius
    2       pz   50.10150                    $Plane, Bottom
    3       pz   52.64150                    $Plane, Top
c
c    Shielded Container Base Surfaces
c
   11       cz   37.33800                    $Radius, Base Outer
   12       pz    0.00000                    $Plane, Base Bottom
   13       pz    5.96900                    $Plane, Base Top
   14       kz  -37.02050   1.00000        1 $Chamfer, Base Bottom Outside Corner
c
c    Shielded Container Sidewall Surfaces
c
   15       cz   31.75000                    $Radius, Sidewall Inner
   16       cz   37.33800                    $Radius, Sidewall Outer
   17       cz   31.95320                    $Radius, Lid Engagement Step
   18       pz   99.31400                    $Plane, Sidewall Top
   19       kz   64.70650   1.00000        1 $Cone, Lid Engagement Transition
   20       kz   11.20580   0.13247          $Chamfer, Top Inside Corner
c
c    Shielded Container Lid Surfaces
c
   24       cz   37.33800                    $Radius, Lid Outer
   25       pz   96.77400                    $Plane, Lid Bottom
   26       pz  102.87000                    $Plane, Lid Top
   27       cz   31.91510                    $Radius, Lid Step
   28       kz  139.89050   1.00000       -1 $Chamfer, Top Outside Corner
   29       kz    9.72298   0.13247        1 $Chamfer, Bottom Outside Corner
   30       cz   31.76270                    $Radius, Vent Port Groove Inner
   31       pz   98.39960                    $Plane, Vent Port Groove Bottom
   32       cz   33.78200                    $Radius, Gasket Recess Outer
   33       pz   99.63150                    $Plane, Gasket Recess Top
c
c    Shielded Container Universe Fill Boundary Surfaces
c
   97       cz   37.33801                    $Radius, Fill Boundary
   98       pz   -0.00001                    $Plane, Fill Boundary Bottom
   99       pz  102.87001                    $Plane, Fill Boundary Top
c
c    HalfPACT Package ICV/OCV Surfaces
c
  201       cz   92.23375                    $Radius, Shell Inner
  202       cz   93.34500                    $Radius, Shell Outer
  203       pz   22.86000                    $Plane, Lower Head Bottom
  204       pz   24.13000                    $Plane, Lower Head Top
  205       pz  198.12000                    $Plane, Upper Head Bottom
  206       pz  199.39000                    $Plane, Upper Head Top
c
c    HalfPACT Package OCA Surfaces
c
  211       cz  118.74500                    $Radius, Shell Inner
  212       cz  119.38000                    $Radius, Shell Outer
  213       pz    0.00000                    $Plane, Lower Head Bottom
  214       pz    0.63500                    $Plane, Lower Head Top
  215       pz  229.23500                    $Plane, Upper Head Bottom
  216       pz  229.87000                    $Plane, Upper Head Top
c
c    HalfPACT Package Tally Surfaces
c
  301       cz  119.38000                    $Radius, Inner (at Surface)
  302       cz  119.48000                    $Radius, Outer (at Surface)
  303       cz  319.38000                    $Radius, Inner (at 2.000-Meters)
```

```
149-         304       cz  319.48000                    $Radius, Outer (at 2.001-Meters)
150-         305       pz  108.58500                    $Plane, Bottom Elevation
151-         306       pz  113.66500                    $Plane, Top Elevation
152-       c
153-       c    Define World Surface (Problem Boundary)
154-       c
155-         999       sz  114.93500       400
156-
157-       c
158-       c    Physics Cards
159-       c
160-       mode n    p
comment.  photonuclear physics may be needed (phys:p).
161-       c
162-       c    Material Cards
163-       c
164-       m1     1001.84C -0.143685      $Payload (Polyetheylene)
165-              1002.84C -0.000033       6000.84C -0.856282
166-            plib = 84P
167-       c
168-       m2    26054.84C -0.058450      $Carbon Steel
169-             26056.84C -0.917540      26057.84C -0.021190      26058.84C -0.002820
170-            plib = 84P
171-       c
172-       m4    14028.84C -0.009222      $Stainless Steel (ASTM A240, Type 304)
173-             14029.84C -0.000469      14030.84C -0.000309      24050.84C -0.008256
174-             24052.84C -0.159199      24053.84C -0.018052      24054.84C -0.004494
175-             25055.84C -0.020000      26054.84C -0.039746      26056.84C -0.623927
176-             26057.84C -0.014409      26058.84C -0.001918      28058.84C -0.068077
177-             28060.84C -0.026223      28061.84C -0.001140      28062.84C -0.003635
178-             28064.84C -0.000926
179-            plib = 84P
180-       c
181-       m5     1001.84C -0.069992      $Urethane Foam
182-              1002.84C -0.000008       6000.84C -0.600000       7014.84C -0.079709
183-              7015.84C -0.000291       8016.84C -0.239909       8017.84C -0.000091
184-             14028.84C -0.009222      14029.84C -0.000469      14030.84C -0.000309
185-            plib = 84P
186-       c
187-       c    Specify Universe Transformations
188-       c
189-       *tr1  -37.97300   0.00000  59.75349                    $Shielded Container 1
190-       *tr2   37.97300   0.00000  59.75349                    $Shielded Container 2
191-       c
192-       c    Specify Explicit Analysis for Weight Windows Evaluation
193-       c
194-       cut:n  2j     0
195-       cut:p  2j     0
196-       c
197-       c    Source Cards
198-       c
199-        sdef par=1 axs=0 0 1 erg=d1 pos=d2 rad=d3 ext=d4
200-        sc1  Concentrated 252Cf Neutron Source
201-        si1    L   0.100000  0.500000  1.000000  2.000000  3.000000
202-                   4.000000  6.000000  8.000000 10.000000 15.000000
203-        sp1        0.00E+00  1.80E+11  2.71E+11  5.36E+11  4.10E+11
204-                   2.73E+11  2.66E+11  8.53E+10  2.44E+10  8.36E+09
205-        si2    L  -37.97300   0.00000 111.12500  37.97300   0.00000 111.12500
206-        sp2         1    1
207-        si3         0.00000   1.27000
208-        sp3   -21    1    1
209-        si4        -1.27000   1.27000
210-        sp4   -21    0    0
211-       c
212-       c    Package Tally Cards
213-       c
214-       f4:n 301
215-       fc4 Package Surface Neutron Dose Rate (mrem/hr) @ Z = 111.12500
216-       sd4 381.20362
217-       f14:n 302
218-       fc14 2-M from Package Surface Neutron Dose Rate (mrem/hr) @ Z = 111.12500
219-       sd14 1019.57524
220-       f24:p 301
221-       fc24 Package Surface Gamma Dose Rate (mrem/hr) @ Z = 111.12500
222-       sd24 381.20362
223-       f34:p 302
224-       fc34 2-M from Package Surface Gamma Dose Rate (mrem/hr) @ Z = 111.12500
225-       sd34 1019.57524
226-       c
227-       c    ANSI/ANS-6.1.1-1977 Neutron Flux-to-Dose Rate Factor Cards
228-       c
```

```
      229-       de0    2.50E-08  1.00E-07  1.00E-06  1.00E-05  1.00E-04 $Energy (Mev)
      230-              1.00E-03  1.00E-02  1.00E-01  5.00E-01  1.00E+00
      231-              2.50E+00  5.00E+00  7.00E+00  1.00E+01  1.40E+01
      232-              2.00E+01
      233-       df0    3.67E-03  3.67E-03  4.46E-03  4.54E-03  4.18E-03 $Factor (mrem/hr)
      234-              3.76E-03  3.56E-03  2.17E-02  9.26E-02  1.32E-01
      235-              1.25E-01  1.56E-01  1.47E-01  1.47E-01  2.08E-01
      236-              2.27E-01
      237-       c
      238-       c    ANSI/ANS-6.1.1-1977 Gamma Flux-to-Dose Rate Factor Cards
      239-       c
      240-       de24       0.01      0.03      0.05      0.07      0.10  $Energy (Mev)
      241-                  0.15      0.20      0.25      0.30      0.35
      242-                  0.40      0.45      0.50      0.55      0.60
      243-                  0.65      0.70      0.80      1.00      1.40
      244-                  1.80      2.20      2.60      2.80      3.25
      245-                  3.75      4.25      4.75      5.00      5.25
      246-                  5.75      6.25      6.75      7.50      9.00
      247-                 11.00     13.00     15.00
      248-       df24   3.96E-03  5.82E-04  2.90E-04  2.58E-04  2.83E-04  $Factor (mrem/hr)
      249-              3.79E-04  5.01E-04  6.31E-04  7.59E-04  8.78E-04
      250-              9.85E-04  1.08E-03  1.17E-03  1.27E-03  1.36E-03
      251-              1.44E-03  1.52E-03  1.68E-03  1.98E-03  2.51E-03
      252-              2.99E-03  3.42E-03  3.82E-03  4.01E-03  4.41E-03
      253-              4.83E-03  5.23E-03  5.60E-03  5.80E-03  6.01E-03
      254-              6.37E-03  6.74E-03  7.11E-03  7.66E-03  8.77E-03
      255-              1.03E-02  1.18E-02  1.33E-02
      256-       de34       0.01      0.03      0.05      0.07      0.10  $Energy (Mev)
      257-                  0.15      0.20      0.25      0.30      0.35
      258-                  0.40      0.45      0.50      0.55      0.60
      259-                  0.65      0.70      0.80      1.00      1.40
      260-                  1.80      2.20      2.60      2.80      3.25
      261-                  3.75      4.25      4.75      5.00      5.25
      262-                  5.75      6.25      6.75      7.50      9.00
      263-                 11.00     13.00     15.00
      264-       df34   3.96E-03  5.82E-04  2.90E-04  2.58E-04  2.83E-04  $Factor (mrem/hr)
      265-              3.79E-04  5.01E-04  6.31E-04  7.59E-04  8.78E-04
      266-              9.85E-04  1.08E-03  1.17E-03  1.27E-03  1.36E-03
      267-              1.44E-03  1.52E-03  1.68E-03  1.98E-03  2.51E-03
      268-              2.99E-03  3.42E-03  3.82E-03  4.01E-03  4.41E-03
      269-              4.83E-03  5.23E-03  5.60E-03  5.80E-03  6.01E-03
      270-              6.37E-03  6.74E-03  7.11E-03  7.66E-03  8.77E-03
      271-              1.03E-02  1.18E-02  1.33E-02
      272-       c
      273-       c    Runtime and Print Cards
      274-       c
      275-       prdmp        j    j     1    2
      276-       ctme      1200

 ***************************************************
 * Random Number Generator  =                   1 *
 * Random Number Seed       =       19073486328125 *
 * Random Number Multiplier =       19073486328125 *
 * Random Number Adder      =                   0 *
 * Random Number Bits Used  =                  48 *
 * Random Number Stride     =              152917 *
 ***************************************************


  comment.  total nubar used if fissionable isotopes are present.

 surface       11   and surface       16   are the same.       16   will be deleted.

 surface       11   and surface       24   are the same.       24   will be deleted.

 surface       12   and surface      213   are the same.      213   will be deleted.

 surface      212   and surface      301   are the same.      301   will be deleted.

 surface     1098   and surface     2098   are the same.     2098   will be deleted.

 surface     1099   and surface     2099   are the same.     2099   will be deleted.

  comment.           6 surfaces were deleted for being the same as others.

  warning.     1 cells appear to consist of more than one piece.
1cells                                                                                                print table 60

                             atom        gram                                                 neutron    photon     photon wt
             cell      mat   density     density     volume       mass            pieces importance importance generation
```

```
      1        1        0  0.00000E+00 0.00000E+00 4.50548E+05 0.00000E+00          1  1.0000E+00 1.0000E+00 -1.000E+00
      2        2        0  0.00000E+00 0.00000E+00 4.50548E+05 0.00000E+00          1  1.0000E+00 1.0000E+00 -1.000E+00
      3        3        1  1.21070E-01 9.40000E-01 1.28704E+01 1.20981E+01          1  1.0000E+00 1.0000E+00 -1.000E+00
      4        4        2  8.46854E-02 7.85260E+00 2.61311E+04 2.05197E+05          1  1.0000E+00 1.0000E+00 -1.000E+00
      5        5        2  8.46854E-02 7.85260E+00 1.13098E+05 8.88115E+05          1  1.0000E+00 1.0000E+00 -1.000E+00
      6        6        2  8.46854E-02 7.85260E+00 2.35256E+04 1.84737E+05          1  1.0000E+00 1.0000E+00 -1.000E+00
      7        7        1  1.21070E-01 9.40000E-01 0.00000E+00 0.00000E+00          0  1.0000E+00 1.0000E+00 -1.000E+00
      8        8        0  0.00000E+00 0.00000E+00 0.00000E+00 0.00000E+00          0  1.0000E+00 1.0000E+00 -1.000E+00
      9      201        4  8.80954E-02 8.01280E+00 1.82252E+05 1.46035E+06          1  1.0000E+00 1.0000E+00 -1.000E+00
     10      202        5  1.11837E-02 1.32200E-01 5.29418E+06 6.99890E+05          1  1.0000E+00 1.0000E+00 -1.000E+00
     11      203        4  8.80954E-02 8.01280E+00 1.65455E+05 1.32576E+06          1  1.0000E+00 1.0000E+00 -1.000E+00
     12      204        0  0.00000E+00 0.00000E+00 0.00000E+00 0.00000E+00          0  1.0000E+00 1.0000E+00 -1.000E+00
     13      205        0  0.00000E+00 0.00000E+00 2.57789E+08 0.00000E+00          2  1.0000E+00 1.0000E+00 -1.000E+00
     14      301        0  0.00000E+00 0.00000E+00 3.81204E+02 0.00000E+00          1  1.0000E+00 1.0000E+00 -1.000E+00
     15      302        0  0.00000E+00 0.00000E+00 1.01958E+03 0.00000E+00          1  1.0000E+00 1.0000E+00 -1.000E+00
     16      999        0  0.00000E+00 0.00000E+00 0.00000E+00 0.00000E+00          0  0.0000E+00 0.0000E+00 -1.000E+00

 total                                            2.64496E+08 4.76406E+06

    minimum source weight = 1.0000E+00    maximum source weight = 1.0000E+00

  comment.  threading will be used when possible in portions of mcnp6.

  comment.  threading will be used for n/p/e table physics.

  comment.  threading will generally not be used for model physics.

        2 warning messages so far.
1cross-section tables                                                                                print table 100
     XSDIR used: C:\MCNP\MCNP_DATA/xsdir_mcnp6.2

     table    length

                        tables from file xdata/endf71x/H/1001.714nc

   1001.84c    15325  H1 ENDF71x (jlconlin)  Ref. see jlconlin (ref 09/10/2012  10:00:53)         mat 125      12/17/12
                      Energy range:   1.00000E-11  to  2.00000E+01 MeV.
                      particle-production data for deuterons being expunged from   1001.84c
                      temperature = 2.1543E-07 adjusted to 2.5300E-08

                        tables from file xdata/endf71x/H/1002.714nc

   1002.84c     7283  H2 ENDF71x (jlconlin)  Ref. see jlconlin (ref 09/10/2012  10:00:53)         mat 128      12/17/12
                      Energy range:   1.00000E-11  to  1.50000E+02 MeV.
                      particle-production data for protons   being expunged from   1002.84c
                      particle-production data for tritons   being expunged from   1002.84c
                      temperature = 2.1543E-07 adjusted to 2.5300E-08

                        tables from file xdata/endf71x/C/6000.714nc

   6000.84c    55343  C0 ENDF71x (jlconlin)  Ref. see jlconlin (ref 09/10/2012  10:00:53)         mat 600      12/20/12
                      Energy range:   1.00000E-11  to  1.50000E+02 MeV.
                      particle-production data for protons   being expunged from   6000.84c
                      particle-production data for deuterons being expunged from   6000.84c
                      particle-production data for alphas    being expunged from   6000.84c
                      temperature = 2.1543E-07 adjusted to 2.5300E-08

                        tables from file xdata/endf71x/N/7014.714nc

   7014.84c   102640  N14 ENDF71x (jlconlin)  Ref. see jlconlin (ref 09/10/2012  10:00:53)         mat 725      12/16/12
                      Energy range:   1.00000E-11  to  1.50000E+02 MeV.
                      particle-production data for protons   being expunged from   7014.84c
                      particle-production data for deuterons being expunged from   7014.84c
                      particle-production data for alphas    being expunged from   7014.84c
                      temperature = 2.1543E-07 adjusted to 2.5300E-08

                        tables from file xdata/endf71x/N/7015.714nc

   7015.84c    28412  N15 ENDF71x (jlconlin)  Ref. see jlconlin (ref 09/10/2012  10:00:53)         mat 728      12/16/12
                      Energy range:   1.00000E-11  to  2.00000E+01 MeV.
                      temperature = 2.1543E-07 adjusted to 2.5300E-08

                        tables from file xdata/endf71x/O/8016.714nc

   8016.84c   264772  O16 ENDF71x (jlconlin)  Ref. see jlconlin (ref 09/10/2012  10:00:53)         mat 825      12/13/12
                      Energy range:   1.00000E-11  to  1.50000E+02 MeV.
                      particle-production data for protons   being expunged from   8016.84c
                      particle-production data for deuterons being expunged from   8016.84c
                      particle-production data for tritons   being expunged from   8016.84c
                      particle-production data for alphas    being expunged from   8016.84c
                      temperature = 2.1543E-07 adjusted to 2.5300E-08
```

```
                    tables from file xdata/endf71x/O/8017.714nc

 8017.84c    4921  O17 ENDF71x (jlconlin)  Ref. see jlconlin (ref 09/10/2012  10:00:53)        mat 828      12/13/12
                   Energy range:   1.00000E-11  to  2.00000E+01 MeV.
                   temperature = 2.1543E-07 adjusted to 2.5300E-08

warning.    8017.84c lacks gamma-ray production cross sections.

                    tables from file xdata/endf71x/Si/14028.714nc

14028.84c  169896  Si28 ENDF71x (jlconlin)  Ref. see jlconlin (ref 09/10/2012  10:00:53)        mat1425      12/14/12
                   Energy range:   1.00000E-11  to  1.50000E+02 MeV.
                   particle-production data for protons   being expunged from  14028.84c
                   particle-production data for deuterons being expunged from  14028.84c
                   particle-production data for tritons   being expunged from  14028.84c
                   particle-production data for alphas    being expunged from  14028.84c
                   temperature = 2.1543E-07 adjusted to 2.5300E-08

                    tables from file xdata/endf71x/Si/14029.714nc

14029.84c  158834  Si29 ENDF71x (jlconlin)  Ref. see jlconlin (ref 09/10/2012  10:00:53)        mat1428      12/14/12
                   Energy range:   1.00000E-11  to  1.50000E+02 MeV.
                   particle-production data for protons   being expunged from  14029.84c
                   particle-production data for deuterons being expunged from  14029.84c
                   particle-production data for tritons   being expunged from  14029.84c
                   particle-production data for alphas    being expunged from  14029.84c
                   temperature = 2.1543E-07 adjusted to 2.5300E-08

                    tables from file xdata/endf71x/Si/14030.714nc

14030.84c  130018  Si30 ENDF71x (jlconlin)  Ref. see jlconlin (ref 09/10/2012  10:00:53)        mat1431      12/16/12
                   Energy range:   1.00000E-11  to  1.50000E+02 MeV.
                   particle-production data for protons   being expunged from  14030.84c
                   particle-production data for deuterons being expunged from  14030.84c
                   particle-production data for tritons   being expunged from  14030.84c
                   particle-production data for alphas    being expunged from  14030.84c
                   temperature = 2.1543E-07 adjusted to 2.5300E-08

                    tables from file xdata/endf71x/Cr/24050.714nc

24050.84c  291186  Cr50 ENDF71x (jlconlin)  Ref. see jlconlin (ref 09/10/2012  10:00:53)        mat2425      12/13/12
                   Energy range:   1.00000E-11  to  1.50000E+02 MeV.
                   particle-production data for protons   being expunged from  24050.84c
                   particle-production data for deuterons being expunged from  24050.84c
                   particle-production data for tritons   being expunged from  24050.84c
                   particle-production data for alphas    being expunged from  24050.84c
                   temperature = 2.1543E-07 adjusted to 2.5300E-08

                    tables from file xdata/endf71x/Cr/24052.714nc

24052.84c  310582  Cr52 ENDF71x (jlconlin)  Ref. see jlconlin (ref 09/10/2012  10:00:53)        mat2431      12/13/12
                   Energy range:   1.00000E-11  to  1.50000E+02 MeV.
                   particle-production data for protons   being expunged from  24052.84c
                   particle-production data for deuterons being expunged from  24052.84c
                   particle-production data for tritons   being expunged from  24052.84c
                   particle-production data for alphas    being expunged from  24052.84c
                   temperature = 2.1543E-07 adjusted to 2.5300E-08

                    tables from file xdata/endf71x/Cr/24053.714nc

24053.84c  254692  Cr53 ENDF71x (jlconlin)  Ref. see jlconlin (ref 09/10/2012  10:00:53)        mat2434      12/13/12
                   Energy range:   1.00000E-11  to  1.50000E+02 MeV.
                   particle-production data for protons   being expunged from  24053.84c
                   particle-production data for deuterons being expunged from  24053.84c
                   particle-production data for tritons   being expunged from  24053.84c
                   particle-production data for alphas    being expunged from  24053.84c
                   temperature = 2.1543E-07 adjusted to 2.5300E-08

                    tables from file xdata/endf71x/Cr/24054.714nc

24054.84c  190185  Cr54 ENDF71x (jlconlin)  Ref. see jlconlin (ref 09/10/2012  10:00:53)        mat2437      12/13/12
                   Energy range:   1.00000E-11  to  1.50000E+02 MeV.
                   particle-production data for protons   being expunged from  24054.84c
                   particle-production data for deuterons being expunged from  24054.84c
                   particle-production data for tritons   being expunged from  24054.84c
                   particle-production data for alphas    being expunged from  24054.84c
                   temperature = 2.1543E-07 adjusted to 2.5300E-08

                    tables from file xdata/endf71x/Mn/25055.714nc
```

```
25055.84c  455909  Mn55 ENDF71x (jlconlin)  Ref. see jlconlin (ref 09/10/2012  10:00:53)       mat2525      12/18/12
                   Energy range:   1.00000E-11  to  6.00000E+01 MeV.
                   particle-production data for protons   being expunged from  25055.84c
                   particle-production data for deuterons being expunged from  25055.84c
                   particle-production data for tritons   being expunged from  25055.84c
                   particle-production data for helions   being expunged from  25055.84c
                   particle-production data for alphas    being expunged from  25055.84c
                   probability tables used from 1.2500E-01 to 1.0000E+00 mev.
                   temperature = 2.1543E-07 adjusted to 2.5300E-08

                      tables from file xdata/endf71x/Fe/26054.714nc

26054.84c  217705  Fe54 ENDF71x (jlconlin)  Ref. see jlconlin (ref 09/10/2012  10:00:53)       mat2625      12/22/12
                   Energy range:   1.00000E-11  to  1.50000E+02 MeV.
                   particle-production data for protons   being expunged from  26054.84c
                   particle-production data for deuterons being expunged from  26054.84c
                   particle-production data for tritons   being expunged from  26054.84c
                   particle-production data for alphas    being expunged from  26054.84c
                   temperature = 2.1543E-07 adjusted to 2.5300E-08

                      tables from file xdata/endf71x/Fe/26056.714nc

26056.84c  352429  Fe56 ENDF71x (jlconlin)  Ref. see jlconlin (ref 09/10/2012  10:00:53)       mat2631      12/22/12
                   Energy range:   1.00000E-11  to  1.50000E+02 MeV.
                   particle-production data for protons   being expunged from  26056.84c
                   particle-production data for deuterons being expunged from  26056.84c
                   particle-production data for tritons   being expunged from  26056.84c
                   particle-production data for alphas    being expunged from  26056.84c
                   temperature = 2.1543E-07 adjusted to 2.5300E-08

                      tables from file xdata/endf71x/Fe/26057.714nc

26057.84c  241212  Fe57 ENDF71x (jlconlin)  Ref. see jlconlin (ref 09/10/2012  10:00:53)       mat2634      12/22/12
                   Energy range:   1.00000E-11  to  1.50000E+02 MeV.
                   particle-production data for protons   being expunged from  26057.84c
                   particle-production data for deuterons being expunged from  26057.84c
                   particle-production data for tritons   being expunged from  26057.84c
                   particle-production data for alphas    being expunged from  26057.84c
                   temperature = 2.1543E-07 adjusted to 2.5300E-08

                      tables from file xdata/endf71x/Fe/26058.714nc

26058.84c  135502  Fe58 ENDF71x (jlconlin)  Ref. see jlconlin (ref 09/10/2012  10:00:53)       mat2637      12/22/12
                   Energy range:   1.00000E-11  to  2.00000E+01 MeV.
                   particle-production data for protons   being expunged from  26058.84c
                   particle-production data for alphas    being expunged from  26058.84c
                   temperature = 2.1543E-07 adjusted to 2.5300E-08

                      tables from file xdata/endf71x/Ni/28058.714nc

28058.84c  420627  Ni58 ENDF71x (jlconlin)  Ref. see jlconlin (ref 09/10/2012  10:00:53)       mat2825      12/15/12
                   Energy range:   1.00000E-11  to  1.50000E+02 MeV.
                   particle-production data for protons   being expunged from  28058.84c
                   particle-production data for deuterons being expunged from  28058.84c
                   particle-production data for tritons   being expunged from  28058.84c
                   particle-production data for alphas    being expunged from  28058.84c
                   temperature = 2.1543E-07 adjusted to 2.5300E-08

                      tables from file xdata/endf71x/Ni/28060.714nc

28060.84c  344192  Ni60 ENDF71x (jlconlin)  Ref. see jlconlin (ref 09/10/2012  10:00:53)       mat2831      12/17/12
                   Energy range:   1.00000E-11  to  1.50000E+02 MeV.
                   particle-production data for protons   being expunged from  28060.84c
                   particle-production data for deuterons being expunged from  28060.84c
                   particle-production data for tritons   being expunged from  28060.84c
                   particle-production data for alphas    being expunged from  28060.84c
                   temperature = 2.1543E-07 adjusted to 2.5300E-08

                      tables from file xdata/endf71x/Ni/28061.714nc

28061.84c  190713  Ni61 ENDF71x (jlconlin)  Ref. see jlconlin (ref 09/10/2012  10:00:53)       mat2834      12/13/12
                   Energy range:   1.00000E-11  to  1.50000E+02 MeV.
                   particle-production data for protons   being expunged from  28061.84c
                   particle-production data for deuterons being expunged from  28061.84c
                   particle-production data for tritons   being expunged from  28061.84c
                   particle-production data for alphas    being expunged from  28061.84c
                   temperature = 2.1543E-07 adjusted to 2.5300E-08

                      tables from file xdata/endf71x/Ni/28062.714nc

28062.84c  169202  Ni62 ENDF71x (jlconlin)  Ref. see jlconlin (ref 09/10/2012  10:00:53)       mat2837      12/17/12
```

```
                    Energy range:   1.00000E-11  to  1.50000E+02 MeV.
                    particle-production data for protons   being expunged from  28062.84c
                    particle-production data for deuterons being expunged from  28062.84c
                    particle-production data for tritons   being expunged from  28062.84c
                    particle-production data for alphas    being expunged from  28062.84c
                    probability tables used from 6.0000E-01 to 1.0000E+00 mev.
                    temperature = 2.1543E-07 adjusted to 2.5300E-08

                       tables from file xdata/endf71x/Ni/28064.714nc

  28064.84c  152759  Ni64 ENDF71x (jlconlin)  Ref. see jlconlin (ref 09/10/2012  10:00:53)        mat2843      12/17/12
                    Energy range:   1.00000E-11  to  1.50000E+02 MeV.
                    particle-production data for protons   being expunged from  28064.84c
                    particle-production data for deuterons being expunged from  28064.84c
                    particle-production data for tritons   being expunged from  28064.84c
                    particle-production data for alphas    being expunged from  28064.84c
                    temperature = 2.1543E-07 adjusted to 2.5300E-08

                       tables from file xdata/mcplib84

   1000.84p    1974  Update of MCPLIB04 Photon Compton Broadening Data For MCNP5 see LA-UR-    12-00018        01/03/12
                    Energy range:   1.00000E-03  to  1.00000E+05 MeV.
   6000.84p    3228  Update of MCPLIB04 Photon Compton Broadening Data For MCNP5 see LA-UR-    12-00018        01/03/12
                    Energy range:   1.00000E-03  to  1.00000E+05 MeV.
   7000.84p    3270  Update of MCPLIB04 Photon Compton Broadening Data For MCNP5 see LA-UR-    12-00018        01/03/12
                    Energy range:   1.00000E-03  to  1.00000E+05 MeV.
   8000.84p    3348  Update of MCPLIB04 Photon Compton Broadening Data For MCNP5 see LA-UR-    12-00018        01/03/12
                    Energy range:   1.00000E-03  to  1.00000E+05 MeV.
  14000.84p    4868  Update of MCPLIB04 Photon Compton Broadening Data For MCNP5 see LA-UR-    12-00018        01/03/12
                    Energy range:   1.00000E-03  to  1.00000E+05 MeV.
  24000.84p    5758  Update of MCPLIB04 Photon Compton Broadening Data For MCNP5 see LA-UR-    12-00018        01/03/12
                    Energy range:   1.00000E-03  to  1.00000E+05 MeV.
  25000.84p    5674  Update of MCPLIB04 Photon Compton Broadening Data For MCNP5 see LA-UR-    12-00018        01/03/12
                    Energy range:   1.00000E-03  to  1.00000E+05 MeV.
  26000.84p    5794  Update of MCPLIB04 Photon Compton Broadening Data For MCNP5 see LA-UR-    12-00018        01/03/12
                    Energy range:   1.00000E-03  to  1.00000E+05 MeV.
  28000.84p    5902  Update of MCPLIB04 Photon Compton Broadening Data For MCNP5 see LA-UR-    12-00018        01/03/12
                    Energy range:   1.00000E-03  to  1.00000E+05 MeV.

  total     4704155

  comment.  24 cross sections modified by free gas thermal treatment.

 maximum photon energy set to    100.0 mev (maximum electron energy)

                       tables from file xdata/el03

   1000.03e    2329                                                                                          6/6/98
                    Energy range:   1.00000E-03  to  1.00000E+03 MeV.
   6000.03e    2333                                                                                          6/6/98
                    Energy range:   1.00000E-03  to  1.00000E+03 MeV.
   7000.03e    2333                                                                                          6/6/98
                    Energy range:   1.00000E-03  to  1.00000E+03 MeV.
   8000.03e    2333                                                                                          6/6/98
                    Energy range:   1.00000E-03  to  1.00000E+03 MeV.
  14000.03e    2339                                                                                          6/6/98
                    Energy range:   1.00000E-03  to  1.00000E+03 MeV.
  24000.03e    2345                                                                                          6/6/98
                    Energy range:   1.00000E-03  to  1.00000E+03 MeV.
  25000.03e    2345                                                                                          6/6/98
                    Energy range:   1.00000E-03  to  1.00000E+03 MeV.
  26000.03e    2345                                                                                          6/6/98
                    Energy range:   1.00000E-03  to  1.00000E+03 MeV.
  28000.03e    2347                                                                                          6/6/98
                    Energy range:   1.00000E-03  to  1.00000E+03 MeV.

1particles and energy limits                                                                          print table 101

                        particle      maximum       smallest      largest       always        always
                        cutoff        particle      table         table         use table     use model
   particle type        energy        energy        maximum       maximum       below         above

    1  n    neutron    0.0000E+00    1.0000E+36    2.0000E+01    1.5000E+02    1.0000E+36    1.0000E+36
    2  p    photon     1.0000E-03    1.0000E+02    1.0000E+05    1.0000E+05    1.0000E+36    1.0000E+36
    3  e    electron   1.0000E-03    1.0000E+02    1.0000E+02    1.0000E+02    1.0000E+36    1.0000E+36


  warning.  material        2 has been set to a conductor.

  warning.  material        4 has been set to a conductor.
  comment.  setting up hash-based fast table search for xsec tables
```

```
 ----------------------------------------------------------------------------------------
 =====> Set up arrays for hash-based fast table search for xsec data

    number of hash bins   =     8192
    min hash table energy =  1.00000E-11
    max hash table energy =  1.50000E+02

            nuclide      ne      emin        emax     ave_bins  min_bins  max_bins
             1001.84c     590 1.00000E-11 2.00000E+01       0.1       0.0       1.0
             1002.84c     583 1.00000E-11 1.50000E+02       0.1       0.0       2.0
             6000.84c    1328 1.00000E-11 1.50000E+02       0.2       0.0      11.0
             7014.84c    1826 1.00000E-11 1.50000E+02       0.2       0.0      18.0
             7015.84c     939 1.00000E-11 2.00000E+01       0.1       0.0       7.0
             8016.84c    2961 1.00000E-11 1.50000E+02       0.4       0.0      33.0
             8017.84c     620 1.00000E-11 2.00000E+01       0.1       0.0       1.0
            14028.84c    8019 1.00000E-11 1.50000E+02       1.0       0.0     115.0
            14029.84c    4979 1.00000E-11 1.50000E+02       0.6       0.0     102.0
            14030.84c    6089 1.00000E-11 1.50000E+02       0.7       0.0      88.0
            24050.84c   29758 1.00000E-11 1.50000E+02       3.6       0.0     180.0
            24052.84c   30705 1.00000E-11 1.50000E+02       3.7       0.0     201.0
            24053.84c   21659 1.00000E-11 1.50000E+02       2.6       0.0     114.0
            24054.84c   14261 1.00000E-11 1.50000E+02       1.7       0.0     121.0
            25055.84c   11703 1.00000E-11 6.00000E+01       1.4       0.0     109.0
            26054.84c   18775 1.00000E-11 1.50000E+02       2.3       0.0     139.0
            26056.84c   26742 1.00000E-11 1.50000E+02       3.3       0.0     156.0
            26057.84c   15731 1.00000E-11 1.50000E+02       1.9       0.0     200.0
            26058.84c   10972 1.00000E-11 2.00000E+01       1.3       0.0     102.0
            28058.84c   43443 1.00000E-11 1.50000E+02       5.3       0.0     302.0
            28060.84c   33910 1.00000E-11 1.50000E+02       4.1       0.0     179.0
            28061.84c   11091 1.00000E-11 1.50000E+02       1.4       0.0      94.0
            28062.84c   11345 1.00000E-11 1.50000E+02       1.4       0.0     143.0
            28064.84c   10310 1.00000E-11 1.50000E+02       1.3       0.0     272.0

 ----------------------------------------------------------------------------------------


 ******************************************************************************************************************

 dump no.    1 on file NCT_HP_SC-55G1_252Cf_0.r     nps =           0     coll =              0     ctm =        0.00
 nrn =                 0

         5 warning messages so far.
1problem summary

      run terminated when it had used 1200  minutes of computer time.
+                                                                                                  08/29/21 18:46:12

 =====>     215.37 M histories/hr    (based on wall-clock time in mcrun)


      title HP/SC-55G1 with a Concentrated 252Cf Neutron Source - NCT     probid =  08/29/21 17:56:08

 neutron creation    tracks      weight        energy            neutron loss        tracks      weight        energy
                                 (per source particle)                                           (per source particle)

 source           179610771    1.0000E+00    3.1174E+00          escape              904560    5.0362E-03    8.7319E-03
 nucl. interaction        0    0.            0.                  energy cutoff            0    0.            0.
 particle decay           0    0.            0.                  time cutoff              0    0.            0.
 weight window            0    0.            0.                  weight window            0    0.            0.
 cell importance          0    0.            0.                  cell importance          0    0.            0.
 weight cutoff            0    0.            0.                  weight cutoff            0    0.            0.
 e or t importance        0    0.            0.                  e or t importance        0    0.            0.
 dxtran                   0    0.            0.                  dxtran                   0    0.            0.
 forced collisions        0    0.            0.                  forced collisions        0    0.            0.
 exp. transform           0    0.            0.                  exp. transform           0    0.            0.
 upscattering             0    0.            1.2557E-06          downscattering           0    0.            3.0820E+00
 photonuclear             0    0.            0.                  capture          178716470    9.9502E-01    2.6014E-02
 (n,xn)               20518    1.1424E-04    1.4017E-04          loss to (n,xn)       10259    5.7118E-05    8.1118E-04
 prompt fission           0    0.            0.                  loss to fission          0    0.            0.
 delayed fission          0    0.            0.                  nucl. interaction        0    0.            0.
 prompt photofis          0    0.            0.                  particle decay           0    0.            0.
 tabular boundary         0    0.            0.                  tabular boundary         0    0.            0.
 tabular sampling         0    0.            0.                  elastic scatter          0    0.            0.
     total        179631289    1.0001E+00    3.1175E+00              total        179631289    1.0001E+00    3.1175E+00

   number of neutrons banked                   10259        average time of (shakes)             cutoffs
   neutron tracks per source particle     1.0001E+00          escape            1.3396E+04          tco   1.0000E+33
   neutron collisions per source particle 1.2434E+02          capture           1.6719E+04          eco   0.0000E+00
   total neutron collisions              22333348203          capture or escape 1.6702E+04          wc1   0.0000E+00
   net multiplication              1.0001E+00 0.0000          any termination   1.6701E+04          wc2   0.0000E+00
```

photon creation	tracks	weight (per source particle)	energy (per source particle)
source	0	0.	0.
nucl. interaction	0	0.	0.
particle decay	0	0.	0.
weight window	0	0.	0.
cell importance	0	0.	0.
weight cutoff	0	0.	0.
e or t importance	0	0.	0.
dxtran	0	0.	0.
forced collisions	0	0.	0.
exp. transform	0	0.	0.
from neutrons	183724143	1.0235E+00	2.3508E+00
bremsstrahlung	71282465	3.9732E-01	2.0634E-02
p-annihilation	9293618	5.1847E-02	2.6494E-02
photonuclear	0	0.	0.
electron x-rays	0	0.	0.
compton fluores	0	0.	0.
muon capt fluores	0	0.	0.
1st fluorescence	48174782	2.6844E-01	1.7244E-03
2nd fluorescence	0	0.	0.
cerenkov	0	0.	0.
(gamma,xgamma)	0	0.	0.
tabular sampling	0	0.	0.
prompt photofis	0	0.	0.
total	312475008	1.7411E+00	2.3997E+00

photon loss	tracks	weight (per source particle)	energy (per source particle)
escape	13326433	7.4366E-02	8.7364E-02
energy cutoff	5	2.8874E-08	9.1603E-05
time cutoff	0	0.	0.
weight window	0	0.	0.
cell importance	0	0.	0.
weight cutoff	0	0.	0.
e or t importance	0	0.	0.
dxtran	0	0.	0.
forced collisions	0	0.	0.
exp. transform	0	0.	0.
compton scatter	0	0.	2.1216E+00
capture	294501761	1.6408E+00	1.1456E-01
pair production	4646809	2.5923E-02	7.6020E-02
photonuclear abs	0	0.	0.
loss to photofis	0	0.	0.
total	312475008	1.7411E+00	2.3997E+00

number of photons banked	264300221	average time of (shakes)	
photon tracks per source particle	1.7397E+00	escape	1.6422E+04
photon collisions per source particle	1.1707E+01	capture	1.3736E+04
total photon collisions	2102691841	capture or escape	1.3853E+04
		any termination	1.3886E+04

cutoffs	
tco	1.0000E+33
eco	1.0000E-03
wc1	0.0000E+00
wc2	0.0000E+00

computer time so far in this run	1200.62 minutes	maximum number ever in bank	29
computer time in mcrun	1200.38 minutes	bank overflows to backup file	0
source particles per minute	1.4963E+05		
random numbers generated	451701521423	most random numbers used was	46208 in history 41959132

range of sampled source weights = 1.0000E+00 to 1.0000E+00

number of histories processed by each thread

7413106	7500612	7511946	7508849	7522273	7493121	7521121	7483149	7492285	7527097
7528186	7415717	7344968	7449988	7497170	7513192	7501470	7502756	7480655	7451652
7454180	7501672	7492271	7503335						

1neutron activity in each cell — print table 126

cell	tracks entering	population	collisions	collisions * weight (per history)	number weighted energy	flux weighted energy	average track weight (relative)	average track mfp (cm)
1	0	0	0	0.0000E+00	0.0000E+00	0.0000E+00	0.0000E+00	0.0000E+00
2	0	0	0	0.0000E+00	0.0000E+00	0.0000E+00	0.0000E+00	0.0000E+00
3	207549317	179610503	167527844	9.3273E-01	2.2112E-03	2.3257E+00	1.0000E+00	3.0958E+00
4	129624	91929	535901	2.9837E-03	9.6647E-04	1.1447E+00	1.0000E+00	4.3005E+00
5	4967796	3052661	20055802	1.1166E-01	6.8054E-04	1.2127E+00	1.0000E+00	4.0111E+00
6	128432	86933	496791	2.7659E-03	9.0300E-04	1.1649E+00	1.0000E+00	4.1846E+00
7	209017886	179558016	22133691671	1.2323E+02	6.9376E-05	4.4644E-01	1.0000E+00	9.5226E-01
8	2207459	1279003	0	0.0000E+00	1.1026E-03	7.7940E-01	1.0000E+00	0.0000E+00
9	2174681	1151214	2308648	1.2854E-02	1.4352E-03	1.0605E+00	1.0000E+00	2.9817E+00
10	1659535	1101581	8042364	4.4777E-02	5.8075E-04	9.3843E-01	1.0000E+00	1.8314E+01
11	1121278	978222	689182	3.8371E-03	1.0700E-03	1.2175E+00	1.0000E+00	2.7516E+00
12	2246518	1281169	0	0.0000E+00	2.1295E-03	1.3205E+00	1.0000E+00	0.0000E+00
13	915993	904560	0	0.0000E+00	1.9091E-03	1.6725E+00	1.0000E+00	0.0000E+00
14	34061	34061	0	0.0000E+00	2.4167E-03	1.7074E+00	1.0000E+00	0.0000E+00
15	11087	11087	0	0.0000E+00	2.3200E-03	1.9392E+00	1.0000E+00	0.0000E+00
total	432163667	369140939	22333348203	1.2434E+02				

1photon activity in each cell — print table 126

cell	tracks entering	population	collisions	collisions * weight (per history)	number weighted energy	flux weighted energy	average track weight (relative)	average track mfp (cm)
1	0	0	0	0.0000E+00	0.0000E+00	0.0000E+00	0.0000E+00	0.0000E+00
2	0	0	0	0.0000E+00	0.0000E+00	0.0000E+00	0.0000E+00	0.0000E+00
3	3100935	3968434	462872	2.5771E-03	1.8601E+00	1.8601E+00	1.0000E+00	1.9029E+01
4	11788598	14665123	44991208	2.5061E-01	9.2073E-01	9.2073E-01	1.0005E+00	1.7650E+00
5	144162951	178114686	561345723	3.1276E+00	9.9228E-01	9.9228E-01	1.0008E+00	1.8199E+00
6	11676279	14081753	42560563	2.3707E-01	9.1943E-01	9.1943E-01	1.0005E+00	1.7622E+00

7	7	26871349	203104315	1389262306	7.7359E+00	8.8936E-01	8.8936E-01	1.0001E+00	1.2276E+01
8	8	32527417	25840038	0	0.0000E+00	8.9743E-01	8.9743E-01	1.0022E+00	0.0000E+00
9	201	26992732	25991432	39881352	2.2262E-01	9.2413E-01	9.2413E-01	1.0026E+00	1.7213E+00
10	202	19341219	17585434	9731396	5.4314E-02	8.7902E-01	8.7902E-01	1.0026E+00	9.6477E+01
11	203	17160862	17544007	14456421	8.0728E-02	9.4249E-01	9.4249E-01	1.0030E+00	1.7468E+00
12	204	30476892	26034740	0	0.0000E+00	1.0200E+00	1.0200E+00	1.0017E+00	0.0000E+00
13	205	13490645	13326433	0	0.0000E+00	1.1501E+00	1.1501E+00	1.0024E+00	0.0000E+00
14	301	497002	497002	0	0.0000E+00	1.0763E+00	1.0763E+00	1.0024E+00	0.0000E+00
15	302	160952	160952	0	0.0000E+00	1.2171E+00	1.2171E+00	1.0019E+00	0.0000E+00
	total	338247833	540914349	2102691841	1.1711E+01				

1summary of photons produced in neutron collisions in the tabular range

production by cell of photons created with energies above local photon energy cutoffs

	cell	number of photons	weight per source neut	energy per source neut	avg photon energy	mev/gm per source neut	weight/neut collision	energy/neut collision
1	1	0	0.00000E+00	0.00000E+00	0.00000E+00	0.00000E+00	0.00000E+00	0.00000E+00
2	2	0	0.00000E+00	0.00000E+00	0.00000E+00	0.00000E+00	0.00000E+00	0.00000E+00
3	3	956007	5.32266E-03	1.61704E-02	3.03803E+00	1.33660E-03	5.70656E-03	1.73367E-02
4	4	81281	4.64008E-04	1.41689E-03	3.05359E+00	6.90503E-09	1.55515E-01	4.74881E-01
5	5	3822911	2.16684E-02	7.10207E-02	3.27762E+00	7.99679E-08	1.94052E-01	6.36030E-01
6	6	77914	4.44866E-04	1.38502E-03	3.11333E+00	7.49722E-09	1.60838E-01	5.00741E-01
7	7	178356548	9.93017E-01	2.25323E+00	2.26907E+00	2.25323E+00	8.05815E-03	1.82845E-02
8	8	0	0.00000E+00	0.00000E+00	0.00000E+00	0.00000E+00	0.00000E+00	0.00000E+00
9	201	294817	1.78438E-03	5.17628E-03	2.90088E+00	3.54455E-09	1.38824E-01	4.02710E-01
10	202	29572	1.64646E-04	4.58428E-04	2.78432E+00	6.55000E-10	3.67706E-03	1.02381E-02
11	203	105088	6.43015E-04	1.96102E-03	3.04972E+00	1.47917E-09	1.67579E-01	5.11069E-01
12	204	0	0.00000E+00	0.00000E+00	0.00000E+00	0.00000E+00	0.00000E+00	0.00000E+00
13	205	0	0.00000E+00	0.00000E+00	0.00000E+00	0.00000E+00	0.00000E+00	0.00000E+00
14	301	0	0.00000E+00	0.00000E+00	0.00000E+00	0.00000E+00	0.00000E+00	0.00000E+00
15	302	0	0.00000E+00	0.00000E+00	0.00000E+00	0.00000E+00	0.00000E+00	0.00000E+00
16	999	0	0.00000E+00	0.00000E+00	0.00000E+00	0.00000E+00	0.00000E+00	0.00000E+00
	total	183724138	1.02351E+00	2.35081E+00	2.29682E+00			

energy distribution of photons produced in neutron collisions in the tabular range

all sampled photons from neutron collisions in the tabular range, without regard to energy cutoffs

energy interval	number of photons	number frequency	cum number distribution	weight of photons	weight frequency	cum weight distribution
20.000	4	2.17718E-08	2.17718E-08	2.52213E-08	2.46420E-08	2.46420E-08
15.000	44	2.39489E-07	2.61261E-07	2.53735E-07	2.47907E-07	2.72549E-07
10.000	1330	7.23911E-06	7.50038E-06	8.54827E-06	8.35193E-06	8.62447E-06
9.000	52742	2.87072E-04	2.94572E-04	2.98369E-04	2.91515E-04	3.00140E-04
8.000	29877	1.62619E-04	4.57191E-04	1.88405E-04	1.84078E-04	4.84218E-04
7.000	832038	4.52874E-03	4.98593E-03	4.65205E-03	4.54519E-03	5.02941E-03
6.000	189968	1.03398E-03	6.01991E-03	1.08625E-03	1.06130E-03	6.09071E-03
5.000	191017	1.03969E-03	7.05961E-03	1.09978E-03	1.07452E-03	7.16522E-03
4.000	4017239	2.18656E-02	2.89252E-02	2.24050E-02	2.18903E-02	2.90556E-02
3.000	599060	3.26065E-03	3.21859E-02	3.38591E-03	3.30814E-03	3.23637E-02
2.000	175248872	9.53870E-01	9.86055E-01	9.75781E-01	9.53368E-01	9.85732E-01
1.000	1057331	5.75499E-03	9.91810E-01	6.00239E-03	5.86452E-03	9.91596E-01
0.500	1148691	6.25226E-03	9.98063E-01	6.55112E-03	6.40065E-03	9.97997E-01
0.100	290749	1.58253E-03	9.99645E-01	1.65650E-03	1.61845E-03	9.99615E-01
0.010	59508	3.23899E-04	9.99969E-01	3.58229E-04	3.50001E-04	9.99965E-01
0.000	5673	3.08778E-05	1.00000E+00	3.53671E-05	3.45547E-05	1.00000E+00
	<-------- energy interval containing the global photon energy cutoff, 1.000E-03 MeV					
total	183724143	1.00000E+00		1.02351E+00	1.00000E+00	

warning. 5 photons from neutron collisions were created below a local photon energy cutoff and were not followed.

1tally 4 nps = 179610771
+ Package Surface Neutron Dose Rate (mrem/hr) @ Z = 111.12500
tally type 4 track length estimate of particle flux.
particle(s): neutrons
this tally is modified by dose function DE4 and DF4.

volumes
cell: 301
3.81204E+02

cell 301
5.75450E-09 0.0082

==========

```
          results of 10 statistical checks for the estimated answer for the tally fluctuation chart (tfc) bin of tally       4

tfc bin     --mean--      ---------relative error---------      ----variance of the variance----      --figure of merit--     -pdf-
behavior    behavior      value   decrease   decrease rate      value   decrease   decrease rate       value     behavior     slope

desired      random       <0.10      yes      1/sqrt(nps)       <0.10      yes        1/nps          constant    random      >3.00
observed    increase       0.01      yes          yes            0.00      yes         yes           constant    random       4.20
passed?        no           yes      yes          yes             yes      yes         yes             yes         yes         yes

================================================================================================================================


 warning.  the tally in the tally fluctuation chart bin did not pass  1 of the 10 statistical checks.

1analysis of the results in the tally fluctuation chart bin (tfc) for tally 4 with nps = 179610771          print table 160


 normed average tally per history  = 5.7545OE-09         unnormed average tally per history  = 2.19364E-06
 estimated tally relative error    = 0.0082              estimated variance of the variance  = 0.0024
 relative error from zero tallies  = 0.0054              relative error from nonzero scores  = 0.0062

 number of nonzero history tallies =       34057         efficiency for the nonzero tallies  = 0.0002
 history number of largest  tally  =    89413698         largest  unnormalized history tally = 4.73611E-01
 (largest  tally)/(average tally)  = 2.15902E+05         (largest  tally)/(avg nonzero tally)= 4.09384E+01

 (confidence interval shift)/mean  = 0.0001              shifted confidence interval center  = 5.75521E-09


 if the largest  history score sampled so far were to occur on the next history, the tfc bin quantities would change as follows:

      estimated quantities          value at nps          value at nps+1          value(nps+1)/value(nps)-1.

      mean                           5.7545OE-09           5.76142E-09                0.001202
      relative error                 8.2088OE-03           8.28639E-03                0.009451
      variance of the variance       2.37521E-03           2.71724E-03                0.143996
      shifted center                 5.75521E-09           5.75527E-09                0.000010
      figure of merit                1.2363OE+01           1.21325E+01               -0.018638

 the estimated inverse power slope of the 200 largest  tallies starting at 6.61204E-02 is 4.2013
 the large score tail of the empirical history score probability density function appears to have no unsampled regions.

 fom = (histories/minute)*(f(x) signal-to-noise ratio)**2 = (1.496E+05)*( 9.09OE-03)**2 = (1.496E+05)*(8.262E-05) = 1.236E+01

1unnormed tally density for tally 4          nonzero tally mean(m) = 1.157E-02   nps = 179610771             print table 161

 abscissa             ordinate   log plot of tally probability density function in tally fluctuation chart bin(d=decade,slope= 4.2)
  tally  number num den log den:d-------------d-------------d-------------d-------------d-------------d-------------d---
3.98-06      1 6.80-03  -2.168 ***************|***************|***************|***************|**************|              |
5.01-06      0 0.00+00   0.000                |               |               |               |              |              |
6.31-06      1 4.29-03  -2.368 ***************|***************|***************|***************|**********    |              |
7.94-06      0 0.00+00   0.000                |               |               |               |              |              |
1.00-05      2 5.41-03  -2.266 ***************|***************|***************|***************|*************   |              |
1.26-05      2 4.30-03  -2.366 ***************|***************|***************|***************|**********    |              |
1.58-05      0 0.00+00   0.000                |               |               |               |              |              |
2.00-05      4 5.43-03  -2.265 ***************|***************|***************|***************|*************   |              |
2.51-05      2 2.16-03  -2.666 ***************|***************|***************|***************|*****         |              |
3.16-05      2 1.71-03  -2.766 ***************|***************|***************|***************|****          |              |
3.98-05      3 2.04-03  -2.690 ***************|***************|***************|***************|*****         |              |
5.01-05      4 2.16-03  -2.665 ***************|***************|***************|***************|*****         |              |
6.31-05      5 2.15-03  -2.669 ***************|***************|***************|***************|*****         |              |
7.94-05      4 1.36-03  -2.865 ***************|***************|***************|***************|**            |              |
1.00-04      9 2.44-03  -2.613 ***************|***************|***************|***************|******        |              |
1.26-04      9 1.94-03  -2.713 ***************|***************|***************|***************|*****         |              |
1.58-04     12 2.05-03  -2.688 ***************|***************|***************|***************|*****         |              |
2.00-04     13 1.76-03  -2.754 ***************|***************|***************|***************|****          |              |
2.51-04     29 3.13-03  -2.505 ***************|***************|***************|***************|********      |              |
3.16-04     22 1.88-03  -2.725 ***************|***************|***************|***************|*****         |              |
3.98-04    765 5.20-02  -1.284 ***************|***************|***************|***************|**************|************  |
5.01-04   2679 1.45-01  -0.840 ***************|***************|***************|***************|**************|**************|***
6.31-04   1931 8.28-02  -1.082 ***************|***************|***************|***************|**************|**************|
7.94-04   1246 4.25-02  -1.372 ***************|***************|***************|***************|**************|**********    |
1.00-03    739 2.00-02  -1.699 ***************|***************|***************|***************|**************|*****         |
1.26-03    569 1.22-02  -1.912 ***************|***************|***************|***************|**************|**            |
1.58-03    487 8.32-03  -2.080 ***************|***************|***************|***************|**************|              |
2.00-03    450 6.11-03  -2.214 ***************|***************|***************|***************|*************   |              |
2.51-03    417 4.49-03  -2.347 ***************|***************|***************|***************|***********     |              |
3.16-03    490 4.19-03  -2.377 ***************|***************|***************|***************|**********      |              |
3.98-03    516 3.51-03  -2.455 ***************|***************|***************|***************|*********       |              |
5.01-03    560 3.02-03  -2.519 ***************|***************|***************|***************|********        |              |
6.31-03    728 3.12-03  -2.505 ***************|***************|***************|***************|********        |              |
```

```
 7.94-03    852 2.90-03  -2.537 **************|**************|**************|**************|********      |              |
 1.00-02    976 2.64-03  -2.578 **************|**************|**************|**************|*******       |              |
 1.26-02   1920 4.13-03  -2.384 mmmmmmmmmmmmmm|mmmmmmmmmmmmmm|mmmmmmmmmmmmmm|mmmmmmmmmmmmmm|mmmmmmmmmm    |              |
 1.58-02  10992 1.88-02  -1.726 **************|**************|**************|**************|**************|*****         |
 2.00-02   4527 6.14-03  -2.212 **************|**************|**************|**************|*************             |              |
 2.51-02   1635 1.76-03  -2.754 **************|**************|**************|**************|****          |              |
 3.16-02    572 4.90-04  -3.310 **************|**************|**************|************  |              |              |
 3.98-02    328 2.23-04  -3.652 **************|**************|**************|*******       |              |              |
 5.01-02    195 1.05-04  -3.977 **************|**************|**************|*             |              |              |
 6.31-02    138 5.92-05  -4.228 **************|**************|************  |              |              |              |
 7.94-02     82 2.79-05  -4.554 **************|**************|********      | s            |              |              |
 1.00-01     47 1.27-05  -4.895 **************|**************|**          s|              |              |              |
 1.26-01     32 6.88-06  -5.162 **************|**************|          s   |              |              |              |
 1.58-01     22 3.76-06  -5.425 **************|**********    |        s     |              |              |              |
 2.00-01     21 2.85-06  -5.545 **************|********      |    s         |              |              |              |
 2.51-01      5 5.39-07  -6.269 ************  |              |s             |              |              |              |
 3.16-01      6 5.14-07  -6.289 ************  |           s  |              |              |              |              |
 3.98-01      4 2.72-07  -6.565 *******       |       s      |              |              |              |              |
 5.01-01      2 1.08-07  -6.966 *             |  s           |              |              |              |              |
  total   34057 1.90-04         d--------------d--------------d--------------d--------------d--------------d--------------d---

1tally       14        nps =   179610771
+                              2-M from Package Surface Neutron Dose Rate (mrem/hr) @ Z = 111.12500
          tally type 4    track length estimate of particle flux.
          particle(s): neutrons
          this tally is modified by dose function DE14 and DF14.

          volumes
                 cell:      302
                      1.01958E+03

 cell  302
               5.13940E-10 0.0118

 ============================================================================================================================

          results of 10 statistical checks for the estimated answer for the tally fluctuation chart (tfc) bin of tally       14

 tfc bin     --mean--      ---------relative error---------      ----variance of the variance----      --figure of merit--     -pdf-
 behavior    behavior      value   decrease   decrease rate      value   decrease   decrease rate      value     behavior     slope

 desired      random       <0.10      yes      1/sqrt(nps)       <0.10      yes        1/nps          constant    random      >3.00
 observed     random        0.01      yes          yes            0.00      yes         yes           constant    random      10.00
 passed?        yes          yes      yes          yes             yes      yes         yes              yes        yes         yes

 ============================================================================================================================

 this tally meets the statistical criteria used to form confidence intervals: check the tally fluctuation chart to verify.
 the results in other bins associated with this tally may not meet these statistical criteria.

 ----- estimated confidence intervals:  -----

 estimated asymmetric confidence interval(1,2,3 sigma): 5.0792E-10 to 5.2004E-10; 5.0186E-10 to 5.2610E-10; 4.9580E-10 to 5.3216E-10
 estimated  symmetric confidence interval(1,2,3 sigma): 5.0788E-10 to 5.2000E-10; 5.0182E-10 to 5.2606E-10; 4.9576E-10 to 5.3212E-10

1analysis of the results in the tally fluctuation chart bin (tfc) for tally 14 with nps = 179610771          print table 160


 normed average tally per history  = 5.13940E-10          unnormed average tally per history  = 5.24001E-07
 estimated tally relative error    = 0.0118               estimated variance of the variance  = 0.0002
 relative error from zero tallies  = 0.0095               relative error from nonzero scores  = 0.0070

 number of nonzero history tallies =       11086          efficiency for the nonzero tallies  = 0.0001
 history number of largest  tally  =   164142676          largest  unnormalized history tally = 2.22614E-02
 (largest  tally)/(average tally)  = 4.24835E+04          (largest  tally)/(avg nonzero tally)= 2.62218E+00

 (confidence interval shift)/mean  = 0.0001               shifted confidence interval center  = 5.13978E-10


 if the largest  history score sampled so far were to occur on the next history, the tfc bin quantities would change as follows:

      estimated quantities          value at nps          value at nps+1          value(nps+1)/value(nps)-1.

      mean                           5.13940E-10           5.14062E-10                0.000237
      relative error                 1.17908E-02           1.17904E-02               -0.000035
      variance of the variance       1.64429E-04           1.64458E-04                0.000180
      shifted center                 5.13978E-10           5.13978E-10                0.000000
      figure of merit                5.99232E+00           5.99274E+00                0.000071
```

```
 the estimated slope of the 200 largest  tallies starting at  1.63565E-02 appears to be decreasing at least exponentially.
 the empirical history score probability density function appears to be increasing at the largest  history scores:
 please examine. see print table 161.
 the large score tail of the empirical history score probability density function appears to have no unsampled regions.

 fom = (histories/minute)*(f(x) signal-to-noise ratio)**2 = (1.496E+05)*( 6.328E-03)**2 = (1.496E+05)*(4.005E-05) = 5.992E+00

1tally       24        nps =   179610771
+                                  Package Surface Gamma Dose Rate (mrem/hr) @ Z = 111.12500
          tally type 4    track length estimate of particle flux.
          particle(s): photons
          this tally is modified by dose function DE24 and DF24.

          volumes
                 cell:      301
                      3.81204E+02

 cell  301
                1.74989E-09 0.0018


 ================================================================================================================================

          results of 10 statistical checks for the estimated answer for the tally fluctuation chart (tfc) bin of tally       24

 tfc bin     --mean--      ---------relative error---------      ----variance of the variance----      --figure of merit--     -pdf-
 behavior    behavior      value   decrease   decrease rate      value   decrease   decrease rate      value     behavior     slope

 desired      random       <0.10      yes      1/sqrt(nps)       <0.10      yes        1/nps          constant    random      >3.00
 observed     random        0.00      yes          yes            0.00       no          no           constant    random       3.10
 passed?        yes          yes      yes          yes             yes       no          no              yes        yes          yes

 ================================================================================================================================


 warning.  the tally in the tally fluctuation chart bin did not pass  2 of the 10 statistical checks.

1analysis of the results in the tally fluctuation chart bin (tfc) for tally 24 with nps = 179610771          print table 160


 normed average tally per history  = 1.74989E-09          unnormed average tally per history  = 6.67066E-07
 estimated tally relative error    = 0.0018               estimated variance of the variance  = 0.0009
 relative error from zero tallies  = 0.0014               relative error from nonzero scores  = 0.0011

 number of nonzero history tallies =      492753          efficiency for the nonzero tallies  = 0.0027
 history number of largest  tally  =   139814528          largest  unnormalized history tally = 3.21154E-02
 (largest  tally)/(average tally)  = 4.81443E+04          (largest  tally)/(avg nonzero tally)= 1.32081E+02

 (confidence interval shift)/mean  = 0.0000               shifted confidence interval center  = 1.74991E-09


 if the largest  history score sampled so far were to occur on the next history, the tfc bin quantities would change as follows:

      estimated quantities          value at nps          value at nps+1          value(nps+1)/value(nps)-1.

      mean                           1.74989E-09            1.75036E-09                0.000268
      relative error                 1.77766E-03            1.79727E-03                0.011033
      variance of the variance       8.65120E-04            1.32127E-03                0.527270
      shifted center                 1.74991E-09            1.74992E-09                0.000003
      figure of merit                2.63624E+02            2.57902E+02               -0.021706

 the estimated inverse power slope of the 200 largest  tallies starting at 2.51354E-03 is 3.1005
 the history score probability density function appears to have an unsampled region at the largest  history scores:
 please examine. see print table 161.

 fom = (histories/minute)*(f(x) signal-to-noise ratio)**2 = (1.496E+05)*( 4.197E-02)**2 = (1.496E+05)*(1.762E-03) = 2.636E+02

1unnormed tally density for tally 24          nonzero tally mean(m) = 2.431E-04   nps = 179610771           print table 161

 abscissa             ordinate   log plot of tally probability density function in tally fluctuation chart bin(d=decade,slope= 3.1)
  tally  number num den log den:d------------d------------d------------d------------d------------d------------d------------d---
 2.00-08      1 7.56-01  -0.121 ************|************|************|************|************|************|****        |
 3.16-08      0 0.00+00   0.000             |            |            |            |            |            |            |
 5.01-08      1 3.01-01  -0.521 ************|************|************|************|************|************ |            |
 7.94-08      5 9.50-01  -0.022 ************|************|************|************|************|************|*****       |
 1.26-07      0 0.00+00   0.000             |            |            |            |            |            |            |
 2.00-07      3 2.27-01  -0.644 ************|************|************|************|************|********** |            |
 3.16-07      6 2.86-01  -0.543 ************|************|************|************|************|************ |            |
 5.01-07      4 1.20-01  -0.919 ************|************|************|************|************|*******     |            |
 7.94-07      7 1.33-01  -0.876 ************|************|************|************|************|*******     |            |
 1.26-06     14 1.68-01  -0.775 ************|************|************|************|************|*********   |            |
```

```
 2.00-06     32 2.42-01  -0.616 ************|************|************|************|************|***********  |            |
 3.16-06     47 2.24-01  -0.649 ************|************|************|************|************|***********  |            |
 5.01-06     92 2.77-01  -0.558 ************|************|************|************|************|************ |            |
 7.94-06    122 2.32-01  -0.635 ************|************|************|************|************|***********  |            |
 1.26-05    185 2.22-01  -0.654 ************|************|************|************|************|***********  |            |
 2.00-05    342 2.59-01  -0.587 ************|************|************|************|************|***********  |            |
 3.16-05   1760 8.40-01  -0.076 ************|************|************|************|************|************|****        |
 5.01-05  15967 4.81+00   0.682 ************|************|************|************|************|************|************|*
 7.94-05  33095 6.29+00   0.798 ************|************|************|************|************|************|************|**
 1.26-04  56083 6.72+00   0.827 ************|************|************|************|************|************|************|***
 2.00-04  93479 7.07+00   0.849 ************|************|************|************|************|************|************|***
 3.16-04 143619 6.85+00   0.836 mmmmmmmmmmmm|mmmmmmmmmmmmm|mmmmmmmmmmmm|mmmmmmmmmmmmm|mmmmmmmmmmmm|mmmmmmmmmmmm|mmmmmmmmmmmm|mmm
 5.01-04 132337 3.98+00   0.600 ************|************|************|************|************|************|************|
 7.94-04  11447 2.17-01  -0.663 ************|************|************|************|************|***********  |            |
 1.26-03   3085 3.70-02  -1.432 ************|************|************|************|************|            |            |
 2.00-03    654 4.95-03  -2.306 ************|************|************|************|*           |            |            |
 3.16-03    244 1.16-03  -2.934 ************|************|************|*******     |  s         |            |            |
 5.01-03     82 2.47-04  -3.608 ************|************|**********  |            s |            |            |            |
 7.94-03     19 3.61-05  -4.443 ************|************|            |     s      |            |            |            |
 1.26-02     15 1.80-05  -4.745 ************|*********   |            s            |            |            |            |
 2.00-02      4 3.02-06  -5.519 ************ |            |     s      |            |            |            |            |
 3.16-02      1 4.77-07  -6.321 *            |            s |          |            |            |            |            |
 3.98-02      1 6.80-07  -6.168 ***          |     s      |            |            |            |            |            |
  total  492753 2.74-03         d------------d------------d------------d------------d------------d------------d------------d---

1tally       34        nps =   179610771
+                              2-M from Package Surface Gamma Dose Rate (mrem/hr) @ Z = 111.12500
          tally type 4    track length estimate of particle flux.
          particle(s): photons
          this tally is modified by dose function DE34 and DF34.

          volumes
                 cell:      302
                      1.01958E+03

 cell  302
               1.86527E-10 0.0029


 ============================================================================================================================

          results of 10 statistical checks for the estimated answer for the tally fluctuation chart (tfc) bin of tally       34

 tfc bin     --mean--      ---------relative error---------      ----variance of the variance----      --figure of merit--     -pdf-
 behavior    behavior      value   decrease   decrease rate      value   decrease   decrease rate      value     behavior     slope

 desired      random       <0.10      yes      1/sqrt(nps)       <0.10      yes        1/nps          constant    random      >3.00
 observed     random        0.00      yes          yes            0.00      yes         yes           constant    random       4.43
 passed?        yes          yes      yes          yes              yes     yes         yes              yes        yes         yes

 ============================================================================================================================


 this tally meets the statistical criteria used to form confidence intervals: check the tally fluctuation chart to verify.
 the results in other bins associated with this tally may not meet these statistical criteria.

 ----- estimated confidence intervals:  -----

 estimated asymmetric confidence interval(1,2,3 sigma): 1.8599E-10 to 1.8707E-10; 1.8545E-10 to 1.8761E-10; 1.8491E-10 to 1.8815E-10
 estimated  symmetric confidence interval(1,2,3 sigma): 1.8599E-10 to 1.8707E-10; 1.8545E-10 to 1.8761E-10; 1.8491E-10 to 1.8815E-10

1analysis of the results in the tally fluctuation chart bin (tfc) for tally 34 with nps = 179610771          print table 160


 normed average tally per history  = 1.86527E-10          unnormed average tally per history  = 1.90179E-07
 estimated tally relative error    = 0.0029               estimated variance of the variance  = 0.0000
 relative error from zero tallies  = 0.0025               relative error from nonzero scores  = 0.0015

 number of nonzero history tallies =      160703          efficiency for the nonzero tallies  = 0.0009
 history number of largest  tally  =   177982641          largest  unnormalized history tally = 1.80858E-03
 (largest  tally)/(average tally)  = 9.50988E+03          (largest  tally)/(avg nonzero tally)= 8.50877E+00

 (confidence interval shift)/mean  = 0.0000               shifted confidence interval center  = 1.86528E-10


 if the largest  history score sampled so far were to occur on the next history, the tfc bin quantities would change as follows:

      estimated quantities          value at nps          value at nps+1          value(nps+1)/value(nps)-1.

      mean                           1.86527E-10            1.86537E-10                0.000053
      relative error                 2.89762E-03            2.89795E-03                0.000114
```

```
      variance of the variance        1.70047E-05           1.71047E-05                0.005881
      shifted center                  1.86528E-10           1.86528E-10                0.000000
      figure of merit                 9.92202E+01           9.91976E+01               -0.000228

 the estimated inverse power slope of the 200 largest  tallies starting at 8.55647E-04 is 4.4286
 the empirical history score probability density function appears to be increasing at the largest  history scores:
 please examine. see print table 161.
 the large score tail of the empirical history score probability density function appears to have no unsampled regions.

 fom = (histories/minute)*(f(x) signal-to-noise ratio)**2 = (1.496E+05)*( 2.575E-02)**2 = (1.496E+05)*(6.631E-04) = 9.922E+01

1status of the statistical checks used to form confidence intervals for the mean for each tally bin


 tally   result of statistical checks for the tfc bin (the first check not passed is listed) and error magnitude check for all bins

        4   missed  1 of 10 tfc bin checks: the estimated mean has a trend during the last half of the problem
          passed all bin error check:     1 tally bins all have relative errors less than 0.10 with no zero bins

       14   passed the 10 statistical checks for the tally fluctuation chart bin result
          passed all bin error check:     1 tally bins all have relative errors less than 0.10 with no zero bins

       24   missed  2 of 10 tfc bin checks: the variance of the variance does not monotonically decrease over the last half of problem
          passed all bin error check:     1 tally bins all have relative errors less than 0.10 with no zero bins

       34   passed the 10 statistical checks for the tally fluctuation chart bin result
          passed all bin error check:     1 tally bins all have relative errors less than 0.10 with no zero bins


 the 10 statistical checks are only for the tally fluctuation chart bin and do not apply to other tally bins.

 warning.       2 of the     4 tally fluctuation chart bins did not pass all 10 statistical checks.
1tally fluctuation charts

                          tally        4                          tally       14                          tally       24
         nps      mean     error   vov  slope    fom      mean     error   vov  slope    fom      mean     error   vov  slope    fom
     16384000   5.8550E-09 0.0260 0.0079  2.8      13   5.2106E-10 0.0386 0.0017  1.7 6.1E+00   1.7526E-09 0.0057 0.0015  3.1     278
     32768000   5.6875E-09 0.0195 0.0084  2.9      12   5.2677E-10 0.0272 0.0009  1.7 6.1E+00   1.7527E-09 0.0040 0.0005  4.2     280
     49152000   5.6624E-09 0.0160 0.0070  3.0      12   5.2368E-10 0.0223 0.0006  1.7 6.1E+00   1.7507E-09 0.0034 0.0012  3.3     268
     65536000   5.6018E-09 0.0137 0.0052  3.8      12   5.2262E-10 0.0194 0.0004  1.7 6.1E+00   1.7509E-09 0.0029 0.0008  3.0     270
     81920000   5.5984E-09 0.0121 0.0037  4.4      12   5.2263E-10 0.0173 0.0004  1.7 6.1E+00   1.7519E-09 0.0026 0.0005  3.3     273
     98304000   5.6134E-09 0.0111 0.0043  3.9      12   5.2001E-10 0.0158 0.0003  2.0 6.1E+00   1.7515E-09 0.0024 0.0004  3.0     272
    114688000   5.6582E-09 0.0102 0.0037  4.0      12   5.1890E-10 0.0147 0.0003 10.0 6.0E+00   1.7478E-09 0.0022 0.0003  2.9     274
    131072000   5.6723E-09 0.0096 0.0033  3.7      12   5.1761E-10 0.0138 0.0002 10.0 6.0E+00   1.7486E-09 0.0020 0.0003  3.3     275
    147456000   5.7024E-09 0.0089 0.0027  3.8      13   5.1484E-10 0.0130 0.0002 10.0 6.0E+00   1.7493E-09 0.0020 0.0011  3.3     266
    163840000   5.7280E-09 0.0086 0.0026  3.9      12   5.1540E-10 0.0123 0.0002 10.0 6.0E+00   1.7486E-09 0.0019 0.0010  3.1     263
    179610771   5.7545E-09 0.0082 0.0024  4.2      12   5.1394E-10 0.0118 0.0002 10.0 6.0E+00   1.7499E-09 0.0018 0.0009  3.1     264


                          tally       34
         nps      mean     error   vov  slope    fom
     16384000   1.8738E-10 0.0096 0.0002  3.3      99
     32768000   1.8658E-10 0.0068 0.0001 10.0     100
     49152000   1.8645E-10 0.0055 0.0001  1.7      99
     65536000   1.8698E-10 0.0048 0.0000  1.7      99
     81920000   1.8658E-10 0.0043 0.0000  1.8      99
     98304000   1.8657E-10 0.0039 0.0000  2.6      99
    114688000   1.8621E-10 0.0036 0.0000  3.8      99
    131072000   1.8641E-10 0.0034 0.0000  4.5      99
    147456000   1.8649E-10 0.0032 0.0000  4.4      99
    163840000   1.8637E-10 0.0030 0.0000  5.8      99
    179610771   1.8653E-10 0.0029 0.0000  4.4      99

 ********************************************************************************************************************************

 dump no.    2 on file NCT_HP_SC-55G1_252Cf_0.r     nps =   179610771     coll =    24436040044     ctm =     1200.38
 nrn =      451701521423
 tally data written to file NCT_HP_SC-55G1_252Cf_0.m

        9 warning messages so far.


 run terminated when it had used 1200  minutes of computer time.

 computer time = 1200.62 minutes

 mcnp     version 6     02/20/18                    08/29/21 18:46:12                    probid =  08/29/21 17:56:08
```

4. SC-55G1 HAC Model with ^{252}Cf – Polyethylene with Secondary Gammas

```
         Code Name & Version = MCNP_6.20, 6.2.0

   _/      _/        _/_/_/       _/      _/       _/_/_/        _/_/_/
  _/_/  _/_/      _/             _/_/    _/       _/    _/     _/
 _/  _/  _/      _/             _/  _/  _/       _/_/_/       _/_/_/
_/      _/      _/             _/    _/_/       _/           _/    _/
_/      _/        _/_/_/       _/      _/       _/            _/_/

 +-----------------------------------------------------------------------+
 | Copyright (2018).  Los Alamos National Security, LLC.  All rights     !
 | reserved.                                                             !
 |  This material was produced under U.S. Government contract            !
 | DE-AC52-06NA25396 for Los Alamos National Laboratory, which is        !
 | operated by Los Alamos National Security, LLC for the U.S.            !
 | Department of Energy. The Government is granted for itself and        !
 | others acting on its behalf a paid-up, nonexclusive, irrevocable      !
 | worldwide license in this material to reproduce, prepare derivative   !
 | works, and perform publicly and display publicly. Beginning five (5)  !
 | years after February 14, 2018, subject to additional five-year        !
 | worldwide renewals, the Government is granted for itself and others   !
 | acting on its behalf a paid-up, nonexclusive, irrevocable worldwide   !
 | license in this material to reproduce, prepare derivative works,      !
 | distribute copies to the public, perform publicly and display         !
 | publicly, and to permit others to do so. NEITHER THE UNITED STATES    !
 | NOR THE UNITED STATES DEPARTMENT OF ENERGY, NOR LOS ALAMOS NATIONAL   !
 | SECURITY, LLC, NOR ANY OF THEIR EMPLOYEES, MAKES ANY WARRANTY,        !
 | EXPRESS OR IMPLIED, OR ASSUMES ANY LEGAL LIABILITY OR RESPONSIBILITY  !
 | FOR THE ACCURACY, COMPLETENESS, OR USEFULNESS OF ANY INFORMATION,     !
 | APPARATUS, PRODUCT, OR PROCESS DISCLOSED, OR REPRESENTS THAT ITS USE  !
 | WOULD NOT INFRINGE PRIVATELY OWNED RIGHTS.                            !
 +-----------------------------------------------------------------------+

1mcnp     version 6     ld=02/20/18                    08/29/21 21:19:57
 ************************************************************************                probid =  08/29/21 21:19:57
 i=HAC_HP_SC-55G1_252Cf_0.i name=HAC_HP_SC-55G1_252Cf_0. tasks 24


  warning.  universe map (print table 128) disabled.

  comment.  Physics models disabled.
        1-       title HP/SC-55G1 with a Concentrated 252Cf Neutron Source - HAC
        2-       c
        3-       c    Universe Fill Boundary
        4-       c
        5-           1    0            -97   98  -99     fill=1     $Shielded Container 1
        6-                           imp:n=1   imp:p=1   trcl=1
        7-           2    0            -97   98  -99     fill=1     $Shielded Container 2
        8-                           imp:n=1   imp:p=1   trcl=2
        9-       c
       10-       c    Payload Cell                                  $Material Density 100%
       11-       c
       12-           3    1   -0.9400   -1    2   -3                $Payload
       13-                           imp:n=1   imp:p=1      u=1
       14-       c
       15-       c    Shielded Container Cells                      $Material Density 100%
       16-       c
       17-           4    2   -7.8526  -11   12  -13  -14           $Base Steel
       18-                           imp:n=1   imp:p=1      u=1
       19-           5    2   -7.8526   13   15  -16  -18   20      $Sidewall Steel
       20-                            (-15  :17  :18  :19)
       21-                           imp:n=1   imp:p=1      u=1
       22-           6    2   -7.8526  -24   25  -26  -28           $Lid Steel
       23-                            ((18 :-25 :-27)
       24-                             (18  :27 :-30 :-31)
       25-                            (-18 :-27  :32  :33)
       26-                            (-25  :27 :-29))
       27-                           imp:n=1   imp:p=1      u=1
       28-       c
       29-       c    Cavity (Void) Cells
       30-       c
       31-           7    1   -0.9400 ((13  -15  -25):              $Payload Cavity
       32-                             (15  -17  -19  -25):
       33-                             (17  -18  -20):
       34-                            (-17  -18   30   31):
       35-                            (-17   25   29):
       36-                            (-17   27  -29  -31):
       37-                             (18   27  -32  -33))
       38-                              (1  :-2   :3)
```

```
                        imp:n=1   imp:p=1      u=1
         8    0           (11 :-12  :13  :14)          $Exterior Void
                          (-13  :16  :18)
                          (-18  :24  :26  :28)
                        imp:n=1   imp:p=1      u=1
c
c    HalfPACT Package Cells                            $Material Density 100%
c
  201    4   -8.0128 (201 -202  204 -205):             $HalfPACT ICV/OCV Steel Structure
                        (-202  203 -204):
                        (-202  205 -206)
                        imp:n=1   imp:p=1
c
c    HalfPACT Package Void Cells
c
  202    0           -201  204 -205                    $HalfPACT ICV Interior Void
                        #1   #2
                        imp:n=1   imp:p=1
  203    0           (202  203 -206 -211):             $HalfPACT OCA Polyurethane Foam
                        (-203 -211  214):
                         (206 -211 -215)
                        imp:n=1   imp:p=1
  204    0           (211 -212  214 -215):             $HalfPACT OCA Steel Structure
                        (-212  213 -214):
                        (-212  215 -216)
                        imp:n=1   imp:p=1
  205    0           -999                              $HalfPACT OCA Exterior Void
                        ((212  213 -216):
                        (-213):
                         (216))
                        (-301 :302 :303)
                        imp:n=1   imp:p=1
c
c    HalfPACT Package 1-meter Tally Cell
c
  301    0             301 -302 -303                   $Package Side Middle @ 1-Meter
                        imp:n=1   imp:p=1
c
c    World Cell
c
  999    0             999
                        imp:n=0   imp:p=0


c
c    Payload Surfaces
c
     1      c/z    0.00000  30.47999   1.27000 $Radius
     2       pz   50.10150                     $Plane, Bottom
     3       pz   52.64150                     $Plane, Top
c
c    Shielded Container Base Surfaces
c
    11       cz   36.77920                     $Radius, Base Outer
    12       pz    0.59690                     $Plane, Base Bottom
    13       pz    5.96900                     $Plane, Base Top
    14       kz  -37.02050   1.00000        1 $Chamfer, Base Bottom Outside Corner
c
c    Shielded Container Sidewall Surfaces
c
    15       cz   31.75000                     $Radius, Sidewall Inner
    16       cz   36.77920                     $Radius, Sidewall Outer
    17       cz   31.95320                     $Radius, Lid Engagement Step
    18       pz   99.31400                     $Plane, Sidewall Top
    19       kz   64.70650   1.00000        1 $Cone, Lid Engagement Transition
    20       kz   11.20580   0.13247          $Chamfer, Top Inside Corner
c
c    Shielded Container Lid Surfaces
c
    24       cz   36.77920                     $Radius, Lid Outer
    25       pz   96.77400                     $Plane, Lid Bottom
    26       pz  102.26040                     $Plane, Lid Top
    27       cz   31.91510                     $Radius, Lid Step
    28       kz  139.89050   1.00000       -1 $Chamfer, Top Outside Corner
    29       kz    9.72298   0.13247        1 $Chamfer, Bottom Outside Corner
    30       cz   31.76270                     $Radius, Vent Port Groove Inner
    31       pz   98.39960                     $Plane, Vent Port Groove Bottom
    32       cz   33.78200                     $Radius, Gasket Recess Outer
    33       pz   99.63150                     $Plane, Gasket Recess Top
c
c    Shielded Container Universe Fill Boundary Surfaces
c
```

```
120-          97       cz   36.77921                    $Radius, Fill Boundary
121-          98       pz   -0.00001                    $Plane, Fill Boundary Bottom
122-          99       pz  102.87001                    $Plane, Fill Boundary Top
123-       c
124-       c    HalfPACT Package ICV/OCV Surfaces
125-       c
126-         201       cz   92.23375                    $Radius, Shell Inner
127-         202       cz   93.34500                    $Radius, Shell Outer
128-         203       pz   22.86000                    $Plane, Lower Head Bottom
129-         204       pz   24.13000                    $Plane, Lower Head Top
130-         205       pz  198.12000                    $Plane, Upper Head Bottom
131-         206       pz  199.39000                    $Plane, Upper Head Top
132-       c
133-       c    HalfPACT Package OCA Surfaces
134-       c
135-         211       cz  118.74500                    $Radius, Shell Inner
136-         212       cz  119.38000                    $Radius, Shell Outer
137-         213       pz    0.00000                    $Plane, Lower Head Bottom
138-         214       pz    0.63500                    $Plane, Lower Head Top
139-         215       pz  229.23500                    $Plane, Upper Head Bottom
140-         216       pz  229.87000                    $Plane, Upper Head Top
141-       c
142-       c    HalfPACT Package Tally Surfaces
143-       c
144-         301      py   219.38000                    $Plane, Side Disk Inside @ 1.00-meter
145-         302      py   219.48000                    $Plane, Side Disk Outside @ 1.00-meter
146-         303     c/y     0.00000 111.12500   2.54000 $Radius, Side Disk
147-       c
148-       c    Define World Surface (Problem Boundary)
149-       c
150-         999       sz  114.93500       400
151-
152-       c
153-       c    Physics Cards
154-       c
155-       mode n    p
comment.  photonuclear physics may be needed (phys:p).
156-       c
157-       c    Material Cards
158-       c
159-       m1     1001.84C -0.143685      $Payload (Polyetheylene)
160-              1002.84C -0.000033       6000.84C -0.856282
161-            plib = 84P
162-       c
163-       m2    26054.84C -0.058450      $Carbon Steel
164-             26056.84C -0.917540      26057.84C -0.021190      26058.84C -0.002820
165-            plib = 84P
166-       c
167-       m4    14028.84C -0.009222      $Stainless Steel (ASTM A240, Type 304)
168-             14029.84C -0.000469      14030.84C -0.000309      24050.84C -0.008256
169-             24052.84C -0.159199      24053.84C -0.018052      24054.84C -0.004494
170-             25055.84C -0.020000      26054.84C -0.039746      26056.84C -0.623927
171-             26057.84C -0.014409      26058.84C -0.001918      28058.84C -0.068077
172-             28060.84C -0.026223      28061.84C -0.001140      28062.84C -0.003635
173-             28064.84C -0.000926
174-            plib = 84P
175-       c
176-       c    Specify Universe Transformations
177-       c
178-       *tr1  -36.77922  41.00094  59.75349                    $Shielded Container 1
179-       *tr2   36.77922  41.00094  59.75349                    $Shielded Container 2
180-       c
181-       c    Specify Explicit Analysis for Weight Windows Evaluation
182-       c
183-       cut:n  2j     0
184-       cut:p  2j     0
185-       c
186-       c    Source Cards
187-       c
188-        sdef par=1 axs=0 0 1 erg=d1 pos=d2 rad=d3 ext=d4
189-        sc1  Concentrated 252Cf Neutron Source
190-        si1    L   0.100000  0.500000  1.000000  2.000000  3.000000
191-                   4.000000  6.000000  8.000000 10.000000 15.000000
192-        sp1        0.00E+00  1.80E+11  2.71E+11  5.36E+11  4.10E+11
193-                   2.73E+11  2.66E+11  8.53E+10  2.44E+10  8.36E+09
194-        si2    L  -36.77922  71.48093 111.12500  36.77922  71.48093 111.12500
195-        sp2          1    1
196-        si3         0.00000   1.27000
197-        sp3   -21    1    1
198-        si4        -1.27000   1.27000
199-        sp4   -21    0    0
```

```
200-       c
201-       c    Package Tally Cards
202-       c
203-       f4:n 301
204-       fc4 1-M from Package Surface Neutron Dose Rate (mrem/hr) @ Z = 111.12500
205-       sd4 2.02683
206-       f14:p 301
207-       fc14 1-M from Package Surface Gamma Dose Rate (mrem/hr) @ Z = 111.12500
208-       sd14 2.02683
209-       c
210-       c    ANSI/ANS-6.1.1-1977 Neutron Flux-to-Dose Rate Factor Cards
211-       c
212-       de0    2.50E-08  1.00E-07  1.00E-06  1.00E-05  1.00E-04 $Energy (Mev)
213-              1.00E-03  1.00E-02  1.00E-01  5.00E-01  1.00E+00
214-              2.50E+00  5.00E+00  7.00E+00  1.00E+01  1.40E+01
215-              2.00E+01
216-       df0    3.67E-03  3.67E-03  4.46E-03  4.54E-03  4.18E-03 $Factor (mrem/hr)
217-              3.76E-03  3.56E-03  2.17E-02  9.26E-02  1.32E-01
218-              1.25E-01  1.56E-01  1.47E-01  1.47E-01  2.08E-01
219-              2.27E-01
220-       c
221-       c    ANSI/ANS-6.1.1-1977 Gamma Flux-to-Dose Rate Factor Cards
222-       c
223-       de14       0.01      0.03      0.05      0.07      0.10  $Energy (Mev)
224-                  0.15      0.20      0.25      0.30      0.35
225-                  0.40      0.45      0.50      0.55      0.60
226-                  0.65      0.70      0.80      1.00      1.40
227-                  1.80      2.20      2.60      2.80      3.25
228-                  3.75      4.25      4.75      5.00      5.25
229-                  5.75      6.25      6.75      7.50      9.00
230-                 11.00     13.00     15.00
231-       df14   3.96E-03  5.82E-04  2.90E-04  2.58E-04  2.83E-04  $Factor (mrem/hr)
232-              3.79E-04  5.01E-04  6.31E-04  7.59E-04  8.78E-04
233-              9.85E-04  1.08E-03  1.17E-03  1.27E-03  1.36E-03
234-              1.44E-03  1.52E-03  1.68E-03  1.98E-03  2.51E-03
235-              2.99E-03  3.42E-03  3.82E-03  4.01E-03  4.41E-03
236-              4.83E-03  5.23E-03  5.60E-03  5.80E-03  6.01E-03
237-              6.37E-03  6.74E-03  7.11E-03  7.66E-03  8.77E-03
238-              1.03E-02  1.18E-02  1.33E-02
239-       c
240-       c    Runtime and Print Cards
241-       c
242-       prdmp        j    j     1    2
243-       ctme      9600

 ******************************************************
 * Random Number Generator  =                    1 *
 * Random Number Seed       =       19073486328125 *
 * Random Number Multiplier =       19073486328125 *
 * Random Number Adder      =                    0 *
 * Random Number Bits Used  =                   48 *
 * Random Number Stride     =               152917 *
 ******************************************************


  comment.  total nubar used if fissionable isotopes are present.

 surface       11   and surface       16   are the same.       16   will be deleted.

 surface       11   and surface       24   are the same.       24   will be deleted.

 surface     1098   and surface     2098   are the same.     2098   will be deleted.

 surface     1099   and surface     2099   are the same.     2099   will be deleted.

  comment.           4 surfaces were deleted for being the same as others.
1cells                                                                                                                print table 60

                              atom        gram                                                    neutron     photon      photon wt
             cell      mat   density     density      volume       mass            pieces importance importance generation

       1        1        0  0.00000E+00 0.00000E+00 4.37163E+05 0.00000E+00           1  1.0000E+00 1.0000E+00 -1.000E+00
       2        2        0  0.00000E+00 0.00000E+00 4.37163E+05 0.00000E+00           1  1.0000E+00 1.0000E+00 -1.000E+00
       3        3        1  1.21070E-01 9.40000E-01 1.28704E+01 1.20981E+01           1  1.0000E+00 1.0000E+00 -1.000E+00
       4        4        2  8.46854E-02 7.85260E+00 2.28296E+04 1.79272E+05           1  1.0000E+00 1.0000E+00 -1.000E+00
       5        5        2  8.46854E-02 7.85260E+00 1.00953E+05 7.92741E+05           1  1.0000E+00 1.0000E+00 -1.000E+00
       6        6        2  8.46854E-02 7.85260E+00 2.04841E+04 1.60853E+05           1  1.0000E+00 1.0000E+00 -1.000E+00
       7        7        1  1.21070E-01 9.40000E-01 0.00000E+00 0.00000E+00           0  1.0000E+00 1.0000E+00 -1.000E+00
       8        8        0  0.00000E+00 0.00000E+00 0.00000E+00 0.00000E+00           0  1.0000E+00 1.0000E+00 -1.000E+00
       9      201        4  8.80954E-02 8.01280E+00 1.82252E+05 1.46035E+06           1  1.0000E+00 1.0000E+00 -1.000E+00
      10      202        0  0.00000E+00 0.00000E+00 0.00000E+00 0.00000E+00           0  1.0000E+00 1.0000E+00 -1.000E+00
```

```
      11      203        0  0.00000E+00 0.00000E+00 5.29418E+06 0.00000E+00          1  1.0000E+00 1.0000E+00 -1.000E+00
      12      204        0  0.00000E+00 0.00000E+00 1.65455E+05 0.00000E+00          1  1.0000E+00 1.0000E+00 -1.000E+00
      13      205        0  0.00000E+00 0.00000E+00 0.00000E+00 0.00000E+00          0  1.0000E+00 1.0000E+00 -1.000E+00
      14      301        0  0.00000E+00 0.00000E+00 2.02683E+00 0.00000E+00          1  1.0000E+00 1.0000E+00 -1.000E+00
      15      999        0  0.00000E+00 0.00000E+00 0.00000E+00 0.00000E+00          0  0.0000E+00 0.0000E+00 -1.000E+00

 total                                                6.66049E+06 2.59323E+06

    minimum source weight = 1.0000E+00    maximum source weight = 1.0000E+00

  comment.  threading will be used when possible in portions of mcnp6.

  comment.  threading will be used for n/p/e table physics.

  comment.  threading will generally not be used for model physics.

         1 warning message so far.
1cross-section tables                                                                                    print table 100
     XSDIR used: C:\MCNP\MCNP_DATA/xsdir_mcnp6.2

     table    length

                        tables from file xdata/endf71x/H/1001.714nc

   1001.84c   15325  H1 ENDF71x (jlconlin)  Ref. see jlconlin (ref 09/10/2012  10:00:53)         mat 125      12/17/12
                     Energy range:   1.00000E-11  to  2.00000E+01 MeV.
                     particle-production data for deuterons being expunged from   1001.84c
                     temperature = 2.1543E-07 adjusted to 2.5300E-08

                        tables from file xdata/endf71x/H/1002.714nc

   1002.84c    7283  H2 ENDF71x (jlconlin)  Ref. see jlconlin (ref 09/10/2012  10:00:53)         mat 128      12/17/12
                     Energy range:   1.00000E-11  to  1.50000E+02 MeV.
                     particle-production data for protons   being expunged from   1002.84c
                     particle-production data for tritons   being expunged from   1002.84c
                     temperature = 2.1543E-07 adjusted to 2.5300E-08

                        tables from file xdata/endf71x/C/6000.714nc

   6000.84c   55343  C0 ENDF71x (jlconlin)  Ref. see jlconlin (ref 09/10/2012  10:00:53)         mat 600      12/20/12
                     Energy range:   1.00000E-11  to  1.50000E+02 MeV.
                     particle-production data for protons   being expunged from   6000.84c
                     particle-production data for deuterons being expunged from   6000.84c
                     particle-production data for alphas    being expunged from   6000.84c
                     temperature = 2.1543E-07 adjusted to 2.5300E-08

                        tables from file xdata/endf71x/Si/14028.714nc

  14028.84c  169896  Si28 ENDF71x (jlconlin)  Ref. see jlconlin (ref 09/10/2012  10:00:53)        mat1425      12/14/12
                     Energy range:   1.00000E-11  to  1.50000E+02 MeV.
                     particle-production data for protons   being expunged from  14028.84c
                     particle-production data for deuterons being expunged from  14028.84c
                     particle-production data for tritons   being expunged from  14028.84c
                     particle-production data for alphas    being expunged from  14028.84c
                     temperature = 2.1543E-07 adjusted to 2.5300E-08

                        tables from file xdata/endf71x/Si/14029.714nc

  14029.84c  158834  Si29 ENDF71x (jlconlin)  Ref. see jlconlin (ref 09/10/2012  10:00:53)        mat1428      12/14/12
                     Energy range:   1.00000E-11  to  1.50000E+02 MeV.
                     particle-production data for protons   being expunged from  14029.84c
                     particle-production data for deuterons being expunged from  14029.84c
                     particle-production data for tritons   being expunged from  14029.84c
                     particle-production data for alphas    being expunged from  14029.84c
                     temperature = 2.1543E-07 adjusted to 2.5300E-08

                        tables from file xdata/endf71x/Si/14030.714nc

  14030.84c  130018  Si30 ENDF71x (jlconlin)  Ref. see jlconlin (ref 09/10/2012  10:00:53)        mat1431      12/16/12
                     Energy range:   1.00000E-11  to  1.50000E+02 MeV.
                     particle-production data for protons   being expunged from  14030.84c
                     particle-production data for deuterons being expunged from  14030.84c
                     particle-production data for tritons   being expunged from  14030.84c
                     particle-production data for alphas    being expunged from  14030.84c
                     temperature = 2.1543E-07 adjusted to 2.5300E-08

                        tables from file xdata/endf71x/Cr/24050.714nc

  24050.84c  291186  Cr50 ENDF71x (jlconlin)  Ref. see jlconlin (ref 09/10/2012  10:00:53)        mat2425      12/13/12
                     Energy range:   1.00000E-11  to  1.50000E+02 MeV.
                     particle-production data for protons   being expunged from  24050.84c
```

```
                  particle-production data for deuterons being expunged from  24050.84c
                  particle-production data for tritons   being expunged from  24050.84c
                  particle-production data for alphas    being expunged from  24050.84c
                  temperature = 2.1543E-07 adjusted to 2.5300E-08

                     tables from file xdata/endf71x/Cr/24052.714nc

24052.84c  310582 Cr52 ENDF71x (jlconlin)  Ref. see jlconlin (ref 09/10/2012  10:00:53)       mat2431     12/13/12
                  Energy range:   1.00000E-11  to  1.50000E+02 MeV.
                  particle-production data for protons   being expunged from  24052.84c
                  particle-production data for deuterons being expunged from  24052.84c
                  particle-production data for tritons   being expunged from  24052.84c
                  particle-production data for alphas    being expunged from  24052.84c
                  temperature = 2.1543E-07 adjusted to 2.5300E-08

                     tables from file xdata/endf71x/Cr/24053.714nc

24053.84c  254692 Cr53 ENDF71x (jlconlin)  Ref. see jlconlin (ref 09/10/2012  10:00:53)       mat2434     12/13/12
                  Energy range:   1.00000E-11  to  1.50000E+02 MeV.
                  particle-production data for protons   being expunged from  24053.84c
                  particle-production data for deuterons being expunged from  24053.84c
                  particle-production data for tritons   being expunged from  24053.84c
                  particle-production data for alphas    being expunged from  24053.84c
                  temperature = 2.1543E-07 adjusted to 2.5300E-08

                     tables from file xdata/endf71x/Cr/24054.714nc

24054.84c  190185 Cr54 ENDF71x (jlconlin)  Ref. see jlconlin (ref 09/10/2012  10:00:53)       mat2437     12/13/12
                  Energy range:   1.00000E-11  to  1.50000E+02 MeV.
                  particle-production data for protons   being expunged from  24054.84c
                  particle-production data for deuterons being expunged from  24054.84c
                  particle-production data for tritons   being expunged from  24054.84c
                  particle-production data for alphas    being expunged from  24054.84c
                  temperature = 2.1543E-07 adjusted to 2.5300E-08

                     tables from file xdata/endf71x/Mn/25055.714nc

25055.84c  455909 Mn55 ENDF71x (jlconlin)  Ref. see jlconlin (ref 09/10/2012  10:00:53)       mat2525     12/18/12
                  Energy range:   1.00000E-11  to  6.00000E+01 MeV.
                  particle-production data for protons   being expunged from  25055.84c
                  particle-production data for deuterons being expunged from  25055.84c
                  particle-production data for tritons   being expunged from  25055.84c
                  particle-production data for helions   being expunged from  25055.84c
                  particle-production data for alphas    being expunged from  25055.84c
                  probability tables used from 1.2500E-01 to 1.0000E+00 mev.
                  temperature = 2.1543E-07 adjusted to 2.5300E-08

                     tables from file xdata/endf71x/Fe/26054.714nc

26054.84c  217705 Fe54 ENDF71x (jlconlin)  Ref. see jlconlin (ref 09/10/2012  10:00:53)       mat2625     12/22/12
                  Energy range:   1.00000E-11  to  1.50000E+02 MeV.
                  particle-production data for protons   being expunged from  26054.84c
                  particle-production data for deuterons being expunged from  26054.84c
                  particle-production data for tritons   being expunged from  26054.84c
                  particle-production data for alphas    being expunged from  26054.84c
                  temperature = 2.1543E-07 adjusted to 2.5300E-08

                     tables from file xdata/endf71x/Fe/26056.714nc

26056.84c  352429 Fe56 ENDF71x (jlconlin)  Ref. see jlconlin (ref 09/10/2012  10:00:53)       mat2631     12/22/12
                  Energy range:   1.00000E-11  to  1.50000E+02 MeV.
                  particle-production data for protons   being expunged from  26056.84c
                  particle-production data for deuterons being expunged from  26056.84c
                  particle-production data for tritons   being expunged from  26056.84c
                  particle-production data for alphas    being expunged from  26056.84c
                  temperature = 2.1543E-07 adjusted to 2.5300E-08

                     tables from file xdata/endf71x/Fe/26057.714nc

26057.84c  241212 Fe57 ENDF71x (jlconlin)  Ref. see jlconlin (ref 09/10/2012  10:00:53)       mat2634     12/22/12
                  Energy range:   1.00000E-11  to  1.50000E+02 MeV.
                  particle-production data for protons   being expunged from  26057.84c
                  particle-production data for deuterons being expunged from  26057.84c
                  particle-production data for tritons   being expunged from  26057.84c
                  particle-production data for alphas    being expunged from  26057.84c
                  temperature = 2.1543E-07 adjusted to 2.5300E-08

                     tables from file xdata/endf71x/Fe/26058.714nc

26058.84c  135502 Fe58 ENDF71x (jlconlin)  Ref. see jlconlin (ref 09/10/2012  10:00:53)       mat2637     12/22/12
                  Energy range:   1.00000E-11  to  2.00000E+01 MeV.
```

```
                    particle-production data for protons   being expunged from  26058.84c
                    particle-production data for alphas    being expunged from  26058.84c
                    temperature = 2.1543E-07 adjusted to 2.5300E-08

                       tables from file xdata/endf71x/Ni/28058.714nc

 28058.84c  420627  Ni58 ENDF71x (jlconlin)  Ref. see jlconlin (ref 09/10/2012  10:00:53)        mat2825      12/15/12
                    Energy range:   1.00000E-11  to  1.50000E+02 MeV.
                    particle-production data for protons   being expunged from  28058.84c
                    particle-production data for deuterons being expunged from  28058.84c
                    particle-production data for tritons   being expunged from  28058.84c
                    particle-production data for alphas    being expunged from  28058.84c
                    temperature = 2.1543E-07 adjusted to 2.5300E-08

                       tables from file xdata/endf71x/Ni/28060.714nc

 28060.84c  344192  Ni60 ENDF71x (jlconlin)  Ref. see jlconlin (ref 09/10/2012  10:00:53)        mat2831      12/17/12
                    Energy range:   1.00000E-11  to  1.50000E+02 MeV.
                    particle-production data for protons   being expunged from  28060.84c
                    particle-production data for deuterons being expunged from  28060.84c
                    particle-production data for tritons   being expunged from  28060.84c
                    particle-production data for alphas    being expunged from  28060.84c
                    temperature = 2.1543E-07 adjusted to 2.5300E-08

                       tables from file xdata/endf71x/Ni/28061.714nc

 28061.84c  190713  Ni61 ENDF71x (jlconlin)  Ref. see jlconlin (ref 09/10/2012  10:00:53)        mat2834      12/13/12
                    Energy range:   1.00000E-11  to  1.50000E+02 MeV.
                    particle-production data for protons   being expunged from  28061.84c
                    particle-production data for deuterons being expunged from  28061.84c
                    particle-production data for tritons   being expunged from  28061.84c
                    particle-production data for alphas    being expunged from  28061.84c
                    temperature = 2.1543E-07 adjusted to 2.5300E-08

                       tables from file xdata/endf71x/Ni/28062.714nc

 28062.84c  169202  Ni62 ENDF71x (jlconlin)  Ref. see jlconlin (ref 09/10/2012  10:00:53)        mat2837      12/17/12
                    Energy range:   1.00000E-11  to  1.50000E+02 MeV.
                    particle-production data for protons   being expunged from  28062.84c
                    particle-production data for deuterons being expunged from  28062.84c
                    particle-production data for tritons   being expunged from  28062.84c
                    particle-production data for alphas    being expunged from  28062.84c
                    probability tables used from 6.0000E-01 to 1.0000E+00 mev.
                    temperature = 2.1543E-07 adjusted to 2.5300E-08

                       tables from file xdata/endf71x/Ni/28064.714nc

 28064.84c  152759  Ni64 ENDF71x (jlconlin)  Ref. see jlconlin (ref 09/10/2012  10:00:53)        mat2843      12/17/12
                    Energy range:   1.00000E-11  to  1.50000E+02 MeV.
                    particle-production data for protons   being expunged from  28064.84c
                    particle-production data for deuterons being expunged from  28064.84c
                    particle-production data for tritons   being expunged from  28064.84c
                    particle-production data for alphas    being expunged from  28064.84c
                    temperature = 2.1543E-07 adjusted to 2.5300E-08

                       tables from file xdata/mcplib84

  1000.84p     1974  Update of MCPLIB04 Photon Compton Broadening Data For MCNP5 see LA-UR-    12-00018      01/03/12
                    Energy range:   1.00000E-03  to  1.00000E+05 MeV.
  6000.84p     3228  Update of MCPLIB04 Photon Compton Broadening Data For MCNP5 see LA-UR-    12-00018      01/03/12
                    Energy range:   1.00000E-03  to  1.00000E+05 MeV.
 14000.84p     4868  Update of MCPLIB04 Photon Compton Broadening Data For MCNP5 see LA-UR-    12-00018      01/03/12
                    Energy range:   1.00000E-03  to  1.00000E+05 MeV.
 24000.84p     5758  Update of MCPLIB04 Photon Compton Broadening Data For MCNP5 see LA-UR-    12-00018      01/03/12
                    Energy range:   1.00000E-03  to  1.00000E+05 MeV.
 25000.84p     5674  Update of MCPLIB04 Photon Compton Broadening Data For MCNP5 see LA-UR-    12-00018      01/03/12
                    Energy range:   1.00000E-03  to  1.00000E+05 MeV.
 26000.84p     5794  Update of MCPLIB04 Photon Compton Broadening Data For MCNP5 see LA-UR-    12-00018      01/03/12
                    Energy range:   1.00000E-03  to  1.00000E+05 MeV.
 28000.84p     5902  Update of MCPLIB04 Photon Compton Broadening Data For MCNP5 see LA-UR-    12-00018      01/03/12
                    Energy range:   1.00000E-03  to  1.00000E+05 MeV.

 total      4296792

 comment.  20 cross sections modified by free gas thermal treatment.

maximum photon energy set to    100.0 mev (maximum electron energy)

                       tables from file xdata/el03

  1000.03e     2329                                                                          6/6/98
```

```
                  Energy range:   1.00000E-03  to  1.00000E+03 MeV.
  6000.03e    2333                                                                    6/6/98
                  Energy range:   1.00000E-03  to  1.00000E+03 MeV.
 14000.03e    2339                                                                    6/6/98
                  Energy range:   1.00000E-03  to  1.00000E+03 MeV.
 24000.03e    2345                                                                    6/6/98
                  Energy range:   1.00000E-03  to  1.00000E+03 MeV.
 25000.03e    2345                                                                    6/6/98
                  Energy range:   1.00000E-03  to  1.00000E+03 MeV.
 26000.03e    2345                                                                    6/6/98
                  Energy range:   1.00000E-03  to  1.00000E+03 MeV.
 28000.03e    2347                                                                    6/6/98
                  Energy range:   1.00000E-03  to  1.00000E+03 MeV.

1particles and energy limits                                                         print table 101

                      particle      maximum       smallest      largest       always        always
                      cutoff        particle      table         table         use table     use model
  particle type       energy        energy        maximum       maximum       below         above

    1  n    neutron    0.0000E+00    1.0000E+36    2.0000E+01    1.5000E+02    1.0000E+36    1.0000E+36
    2  p    photon     1.0000E-03    1.0000E+02    1.0000E+05    1.0000E+05    1.0000E+36    1.0000E+36
    3  e    electron   1.0000E-03    1.0000E+02    1.0000E+02    1.0000E+02    1.0000E+36    1.0000E+36


 warning.  material        2 has been set to a conductor.

 warning.  material        4 has been set to a conductor.
 comment.  setting up hash-based fast table search for xsec tables

 ------------------------------------------------------------------------------------------
 =====> Set up arrays for hash-based fast table search for xsec data

    number of hash bins   =     8192
    min hash table energy =  1.00000E-11
    max hash table energy =  1.50000E+02

          nuclide      ne      emin        emax     ave_bins  min_bins  max_bins
           1001.84c     590 1.00000E-11 2.00000E+01       0.1       0.0       1.0
           1002.84c     583 1.00000E-11 1.50000E+02       0.1       0.0       2.0
           6000.84c    1328 1.00000E-11 1.50000E+02       0.2       0.0      11.0
          14028.84c    8019 1.00000E-11 1.50000E+02       1.0       0.0     115.0
          14029.84c    4979 1.00000E-11 1.50000E+02       0.6       0.0     102.0
          14030.84c    6089 1.00000E-11 1.50000E+02       0.7       0.0      88.0
          24050.84c   29758 1.00000E-11 1.50000E+02       3.6       0.0     180.0
          24052.84c   30705 1.00000E-11 1.50000E+02       3.7       0.0     201.0
          24053.84c   21659 1.00000E-11 1.50000E+02       2.6       0.0     114.0
          24054.84c   14261 1.00000E-11 1.50000E+02       1.7       0.0     121.0
          25055.84c   11703 1.00000E-11 6.00000E+01       1.4       0.0     109.0
          26054.84c   18775 1.00000E-11 1.50000E+02       2.3       0.0     139.0
          26056.84c   26742 1.00000E-11 1.50000E+02       3.3       0.0     156.0
          26057.84c   15731 1.00000E-11 1.50000E+02       1.9       0.0     200.0
          26058.84c   10972 1.00000E-11 2.00000E+01       1.3       0.0     102.0
          28058.84c   43443 1.00000E-11 1.50000E+02       5.3       0.0     302.0
          28060.84c   33910 1.00000E-11 1.50000E+02       4.1       0.0     179.0
          28061.84c   11091 1.00000E-11 1.50000E+02       1.4       0.0      94.0
          28062.84c   11345 1.00000E-11 1.50000E+02       1.4       0.0     143.0
          28064.84c   10310 1.00000E-11 1.50000E+02       1.3       0.0     272.0

 ------------------------------------------------------------------------------------------


 ******************************************************************************************************************************

 dump no.    1 on file HAC_HP_SC-55G1_252Cf_0.r     nps =           0     coll =             0     ctm =        0.00
 nrn =               0

        3 warning messages so far.
 warning.  no photon-production mt found in acegam. zaid =  26056.84c
 nps =    27141026     nrn =                 13 erg = 3.0000E+00

 ******************************************************************************************************************************

 dump no.    2 on file HAC_HP_SC-55G1_252Cf_0.r     nps =   382297793     coll =    29964768786     ctm =     1440.43
 nrn =      534477762467

 ******************************************************************************************************************************

 dump no.    3 on file HAC_HP_SC-55G1_252Cf_0.r     nps =   764447475     coll =    59915947296     ctm =     2880.55
 nrn =     1068710571155
 warning.  no reaction mt found. collision resampled. zaid =  26056.84c
```

```
 nps =   818273327     nrn =                  19 erg = 8.0000E+00

 ************************************************************************************************************************

 dump no.    4 on file HAC_HP_SC-55G1_252Cf_0.r     nps =  1146655242     coll =    89870161452     ctm =     4320.91
 nrn =     1602991344587

 ************************************************************************************************************************

 dump no.    5 on file HAC_HP_SC-55G1_252Cf_0.r     nps =  1528907608     coll =   119828474388     ctm =     5761.36
 nrn =     2137347427868

 ************************************************************************************************************************

 dump no.    6 on file HAC_HP_SC-55G1_252Cf_0.r     nps =  1911064501     coll =   149779406265     ctm =     7201.38
 nrn =     2671570026561

 ************************************************************************************************************************

 dump no.    7 on file HAC_HP_SC-55G1_252Cf_0.r     nps =  2293383107     coll =   179741622542     ctm =     8641.82
 nrn =     3205995547567
1problem summary

      run terminated when it had used 9600  minutes of computer time.
+                                                                                                        08/30/21 04:00:00

 =====>     382.14 M histories/hr     (based on wall-clock time in mcrun)


      title HP/SC-55G1 with a Concentrated 252Cf Neutron Source - HAC     probid =  08/29/21 21:19:57

 neutron creation    tracks      weight        energy           neutron loss        tracks      weight        energy
                                 (per source particle)                                        (per source particle)

 source          2547729148    1.0000E+00    3.1171E+00       escape           856856895    3.3632E-01    4.5571E-01
 nucl. interaction        0    0.            0.               energy cutoff            0    0.            0.
 particle decay           0    0.            0.               time cutoff              0    0.            0.
 weight window            0    0.            0.               weight window            0    0.            0.
 cell importance          0    0.            0.               cell importance          0    0.            0.
 weight cutoff            0    0.            0.               weight cutoff            0    0.            0.
 e or t importance        0    0.            0.               e or t importance        0    0.            0.
 dxtran                   0    0.            0.               dxtran                   0    0.            0.
 forced collisions        0    0.            0.               forced collisions        0    0.            0.
 exp. transform           0    0.            0.               exp. transform           0    0.            0.
 upscattering             0    0.            5.9837E-07       downscattering           0    0.            2.6157E+00
 photonuclear             0    0.            0.               capture         1692102746    6.6416E-01    3.9878E-02
 (n,xn)             2460986    9.6595E-04    1.2615E-03       loss to (n,xn)     1230493    4.8298E-04    7.0557E-03
 prompt fission           0    0.            0.               loss to fission          0    0.            0.
 delayed fission          0    0.            0.               nucl. interaction        0    0.            0.
 prompt photofis          0    0.            0.               particle decay           0    0.            0.
 tabular boundary         0    0.            0.               tabular boundary         0    0.            0.
 tabular sampling         0    0.            0.               elastic scatter          0    0.            0.
     total       2550190134    1.0010E+00    3.1184E+00           total        2550190134    1.0010E+00    3.1184E+00

   number of neutrons banked                1230493       average time of (shakes)              cutoffs
   neutron tracks per source particle     1.0010E+00        escape            1.9583E+03          tco   1.0000E+33
   neutron collisions per source particle 6.7287E+01        capture           1.2433E+04          eco   0.0000E+00
   total neutron collisions             171429580080        capture or escape 8.9120E+03          wc1   0.0000E+00
   net multiplication              1.0005E+00 0.0000        any termination   8.9077E+03          wc2   0.0000E+00

 photon creation     tracks      weight        energy           photon loss         tracks      weight        energy
                                 (per source particle)                                        (per source particle)

 source                   0    0.            0.               escape           502481113    1.9923E-01    3.1167E-01
 nucl. interaction        0    0.            0.               energy cutoff         2423    1.0057E-06    1.7045E-04
 particle decay           0    0.            0.               time cutoff              0    0.            0.
 weight window            0    0.            0.               weight window            0    0.            0.
 cell importance          0    0.            0.               cell importance          0    0.            0.
 weight cutoff            0    0.            0.               weight cutoff            0    0.            0.
 e or t importance        0    0.            0.               e or t importance        0    0.            0.
 dxtran                   0    0.            0.               dxtran                   0    0.            0.
 forced collisions        0    0.            0.               forced collisions        0    0.            0.
 exp. transform           0    0.            0.               exp. transform           0    0.            0.
 from neutrons   2996399012    1.1853E+00    3.0496E+00       compton scatter          0    0.            2.2413E+00
 bremsstrahlung  2083260954    8.2413E-01    8.0519E-02       capture          5852054839    2.3147E+00    1.6789E-01
 p-annihilation   445776204    1.7647E-01    9.0177E-02       pair production  222888102    8.8234E-02    5.0185E-01
 photonuclear             0    0.            0.               photonuclear abs         0    0.            0.
 electron x-rays          0    0.            0.               loss to photofis         0    0.            0.
 compton fluores          0    0.            0.
 muon capt fluores        0    0.            0.
 1st fluorescence1051990307    4.1621E-01    2.6735E-03
```

```
 2nd fluorescence         0    0.            0.
 cerenkov                 0    0.            0.
 (gamma,xgamma)           0    0.            0.
 tabular sampling         0    0.            0.
 prompt photofis          0    0.            0.
     total       6577426477    2.6022E+00    3.2229E+00            total       6577426477    2.6022E+00    3.2229E+00

   number of photons banked              1230466453       average time of (shakes)             cutoffs
   photon tracks per source particle     2.5817E+00         escape           7.5916E+03        tco   1.0000E+33
   photon collisions per source particle 1.1088E+01         capture          7.0153E+03        eco   1.0000E-03
   total photon collisions              28248005354         capture or escape 7.0609E+03        wc1   0.0000E+00
                                                            any termination   7.1352E+03        wc2   0.0000E+00

 computer time so far in this run  9600.74 minutes         maximum number ever in bank       39
 computer time in mcrun            9600.48 minutes         bank overflows to backup file      0
 source particles per minute            2.6538E+05
 random numbers generated          3561588808224          most random numbers used was      46183 in history  1047247824

  warning.  random number period exceeded.  decrease stride.

 range of sampled source weights = 1.0000E+00 to 1.0000E+00

 neutron reaction mt loop failed   1 times.

 neutron-induced photon production mt loop failed  77 times.

 number of histories processed by each thread
   105684883   106253009   106926525   106711270   106915672   106201649   106592336   106040859   105937688   105041781
   106213201   105932338   106574949   105507782   106023518   106273833   106342464   105150249   106378980   105505997
   106080128   106176685   106682425   106580927
1neutron  activity in each cell                                                                          print table 126

                tracks      population   collisions   collisions      number       flux        average      average
          cell  entering                              * weight     weighted     weighted   track weight  track mfp
                                                     (per history)  energy       energy     (relative)    (cm)

       1     1         0           0           0   0.0000E+00   0.0000E+00   0.0000E+00   0.0000E+00   0.0000E+00
       2     2         0           0           0   0.0000E+00   0.0000E+00   0.0000E+00   0.0000E+00   0.0000E+00
       3     3 2892478628  2547789081  2070298499   8.1261E-01   3.5891E-03   2.3966E+00   1.0000E+00   3.1843E+00
       4     4   10312093     7754542    34460241   1.3526E-02   1.2941E-03   4.7948E-01   1.0000E+00   5.5048E+00
       5     5 2759562567  1751672453 10557674701   4.1440E+00   1.2318E-03   1.0873E+00   1.0000E+00   4.4347E+00
       6     6    9673881     6775867    27851291   1.0932E-02   1.0166E-03   4.6496E-01   1.0000E+00   5.1195E+00
       7     7 4108903735  2547555802 157863644903   6.1962E+01   9.4765E-05   5.2825E-01   1.0000E+00   1.0641E+00
       8     8 1259352652   938726237           0   0.0000E+00   3.3600E-03   4.9497E-01   1.0000E+00   0.0000E+00
       9   201 1084563811   932938079   875650445   3.4370E-01   7.9607E-03   1.1656E+00   1.0000E+00   3.7961E+00
      10   202 1280727771   939518659           0   0.0000E+00   5.4867E-03   1.0513E+00   1.0000E+00   0.0000E+00
      11   203  856856895   856856895           0   0.0000E+00   1.3930E-02   1.3191E+00   1.0000E+00   0.0000E+00
      12   204  856856895   856856895           0   0.0000E+00   1.3817E-02   1.3306E+00   1.0000E+00   0.0000E+00
      13   205  857068581   856856895           0   0.0000E+00   1.3554E-02   1.3528E+00   1.0000E+00   0.0000E+00
      14   301     211686      211686           0   0.0000E+00   1.1487E-02   1.4461E+00   1.0000E+00   0.0000E+00

         total 15976569195 12243513091 171429580080   6.7287E+01
1photon   activity in each cell                                                                          print table 126

                tracks      population   collisions   collisions      number       flux        average      average
          cell  entering                              * weight     weighted     weighted   track weight  track mfp
                                                     (per history)  energy       energy     (relative)    (cm)

       1     1         0           0           0   0.0000E+00   0.0000E+00   0.0000E+00   0.0000E+00   0.0000E+00
       2     2         0           0           0   0.0000E+00   0.0000E+00   0.0000E+00   0.0000E+00   0.0000E+00
       3     3  73826392    81626576    11044019   4.3711E-03   1.7056E+00   1.7056E+00   1.0079E+00   1.7323E+01
       4     4  98666001   138179384   390177183   1.5388E-01   1.2432E+00   1.2432E+00   1.0047E+00   1.8543E+00
       5     5 1799073189 4816253646 14324667640   5.6650E+00   1.4703E+00   1.4703E+00   1.0075E+00   1.9760E+00
       6     6  97492944   132230505   367829558   1.4506E-01   1.2476E+00   1.2476E+00   1.0046E+00   1.8566E+00
       7     7 1015866218 2081628616 11854166185   4.6746E+00   9.7812E-01   9.7812E-01   1.0044E+00   1.2365E+01
       8     8  857171040   713994831           0   0.0000E+00   1.3455E+00   1.3455E+00   1.0064E+00   0.0000E+00
       9   201  693582058   915701178  1300120769   5.1607E-01   1.3176E+00   1.3176E+00   1.0114E+00   1.8736E+00
      10   202  856346030   724522558           0   0.0000E+00   1.3132E+00   1.3132E+00   1.0094E+00   0.0000E+00
      11   203  502481113   502481113           0   0.0000E+00   1.5361E+00   1.5361E+00   1.0107E+00   0.0000E+00
      12   204  502481113   502481113           0   0.0000E+00   1.5455E+00   1.5455E+00   1.0105E+00   0.0000E+00
      13   205  502596717   502481113           0   0.0000E+00   1.5599E+00   1.5599E+00   1.0102E+00   0.0000E+00
      14   301     115604      115604           0   0.0000E+00   1.5415E+00   1.5415E+00   1.0098E+00   0.0000E+00

         total  6999698419 11111696237 28248005354   1.1159E+01
1summary of photons produced in neutron collisions in the tabular range

       production by cell of photons created with energies above local photon energy cutoffs

            cell      number of     weight per     energy per     avg photon      mev/gm per    weight/neut    energy/neut
                      photons       source neut    source neut      energy        source neut    collision      collision
```

1	1	0	0.00000E+00	0.00000E+00	0.00000E+00	0.00000E+00	0.00000E+00	0.00000E+00
2	2	0	0.00000E+00	0.00000E+00	0.00000E+00	0.00000E+00	0.00000E+00	0.00000E+00
3	3	10249586	4.02303E-03	1.32627E-02	3.29670E+00	1.09626E-03	4.95078E-03	1.63212E-02
4	4	2549095	1.01595E-03	3.30675E-03	3.25483E+00	1.84454E-08	7.51117E-02	2.44476E-01
5	5	1669971958	6.63331E-01	1.87449E+00	2.82588E+00	2.36457E-06	1.60072E-01	4.52344E-01
6	6	2174188	8.66683E-04	2.97011E-03	3.42699E+00	1.84647E-08	7.92808E-02	2.71695E-01
7	7	1202629388	4.72040E-01	1.07553E+00	2.27848E+00	1.07553E+00	7.61815E-03	1.73578E-02
8	8	0	0.00000E+00	0.00000E+00	0.00000E+00	0.00000E+00	0.00000E+00	0.00000E+00
9	201	108822376	4.40716E-02	8.00051E-02	1.81534E+00	5.47848E-08	1.28228E-01	2.32777E-01
10	202	0	0.00000E+00	0.00000E+00	0.00000E+00	0.00000E+00	0.00000E+00	0.00000E+00
11	203	0	0.00000E+00	0.00000E+00	0.00000E+00	0.00000E+00	0.00000E+00	0.00000E+00
12	204	0	0.00000E+00	0.00000E+00	0.00000E+00	0.00000E+00	0.00000E+00	0.00000E+00
13	205	0	0.00000E+00	0.00000E+00	0.00000E+00	0.00000E+00	0.00000E+00	0.00000E+00
14	301	0	0.00000E+00	0.00000E+00	0.00000E+00	0.00000E+00	0.00000E+00	0.00000E+00
15	999	0	0.00000E+00	0.00000E+00	0.00000E+00	0.00000E+00	0.00000E+00	0.00000E+00
	total	2996396591	1.18535E+00	3.04957E+00	2.57272E+00			

energy distribution of photons produced in neutron collisions in the tabular range

all sampled photons from neutron collisions in the tabular range, without regard to energy cutoffs

energy interval	number of photons	number frequency	cum number distribution	weight of photons	weight frequency	cum weight distribution
20.000	357	1.19143E-07	1.19143E-07	1.59520E-07	1.34576E-07	1.34576E-07
15.000	1624	5.41984E-07	6.61127E-07	7.19030E-07	6.06597E-07	7.41173E-07
10.000	277607	9.26469E-05	9.33080E-05	1.29735E-04	1.09449E-04	1.10190E-04
9.000	17112203	5.71092E-03	5.80423E-03	6.76596E-03	5.70799E-03	5.81818E-03
8.000	6323805	2.11047E-03	7.91470E-03	2.66228E-03	2.24599E-03	8.06417E-03
7.000	270492318	9.02725E-02	9.81872E-02	1.06504E-01	8.98507E-02	9.79149E-02
6.000	60349003	2.01405E-02	1.18328E-01	2.40669E-02	2.03036E-02	1.18219E-01
5.000	60387929	2.01535E-02	1.38481E-01	2.42338E-02	2.04444E-02	1.38663E-01
4.000	104025112	3.47167E-02	1.73198E-01	4.13885E-02	3.49167E-02	1.73580E-01
3.000	93888618	3.13338E-02	2.04532E-01	3.75812E-02	3.17047E-02	2.05284E-01
2.000	1308211051	4.36594E-01	6.41126E-01	5.14507E-01	4.34055E-01	6.39339E-01
1.000	285582967	9.53087E-02	7.36435E-01	1.13758E-01	9.59700E-02	7.35309E-01
0.500	648266578	2.16349E-01	9.52783E-01	2.56721E-01	2.16578E-01	9.51888E-01
0.100	101870789	3.39977E-02	9.86781E-01	4.06220E-02	3.42700E-02	9.86158E-01
0.010	36390621	1.21448E-02	9.98926E-01	1.50260E-02	1.26765E-02	9.98834E-01
0.000	3218430	1.07410E-03	1.00000E+00	1.38203E-03	1.16593E-03	1.00000E+00
	<-------- energy interval containing the global photon energy cutoff, 1.000E-03 MeV					
total	2996399012	1.00000E+00		1.18535E+00	1.00000E+00	

warning. 2421 photons from neutron collisions were created below a local photon energy cutoff and were not followed.

1tally 4 nps = 2547729148
+ 1-M from Package Surface Neutron Dose Rate (mrem/hr) @ Z = 111.12500
tally type 4 track length estimate of particle flux.
particle(s): neutrons
this tally is modified by dose function DE4 and DF4.

volumes
cell: 301
2.02683E+00

cell 301
3.82781E-07 0.0025

==========

results of 10 statistical checks for the estimated answer for the tally fluctuation chart (tfc) bin of tally 4

tfc bin behavior	--mean-- behavior	---------relative error--------- value	decrease	decrease rate	----variance of the variance---- value	decrease	decrease rate	--figure of merit-- value	behavior	-pdf- slope
desired	random	<0.10	yes	1/sqrt(nps)	<0.10	yes	1/nps	constant	random	>3.00
observed	random	0.00	yes	yes	0.00	yes	yes	constant	random	6.74
passed?	yes	yes	yes	yes	yes	yes	yes	yes	yes	yes

==========

this tally meets the statistical criteria used to form confidence intervals: check the tally fluctuation chart to verify.
the results in other bins associated with this tally may not meet these statistical criteria.

----- estimated confidence intervals: -----

estimated asymmetric confidence interval(1,2,3 sigma): 3.8182E-07 to 3.8374E-07; 3.8087E-07 to 3.8470E-07; 3.7991E-07 to 3.8566E-07

```
 estimated  symmetric confidence interval(1,2,3 sigma): 3.8182E-07 to 3.8374E-07; 3.8086E-07 to 3.8470E-07; 3.7991E-07 to 3.8566E-07

1analysis of the results in the tally fluctuation chart bin (tfc) for tally 4 with nps = 2547729148         print table 160


 normed average tally per history  = 3.82781E-07         unnormed average tally per history  = 7.75832E-07
 estimated tally relative error    = 0.0025             estimated variance of the variance  = 0.0000
 relative error from zero tallies  = 0.0022             relative error from nonzero scores  = 0.0012

 number of nonzero history tallies =      211686        efficiency for the nonzero tallies  = 0.0001
 history number of largest  tally  =   248095536        largest  unnormalized history tally = 2.21871E-02
 (largest  tally)/(average tally)  = 2.85978E+04        (largest  tally)/(avg nonzero tally)= 2.37614E+00

 (confidence interval shift)/mean  = 0.0000             shifted confidence interval center  = 3.82782E-07


 if the largest  history score sampled so far were to occur on the next history, the tfc bin quantities would change as follows:

      estimated quantities          value at nps          value at nps+1          value(nps+1)/value(nps)-1.

      mean                           3.82781E-07            3.82785E-07                  0.000011
      relative error                 2.50359E-03            2.50359E-03                 -0.000001
      variance of the variance       7.22367E-06            7.22378E-06                  0.000016
      shifted center                 3.82782E-07            3.82782E-07                  0.000000
      figure of merit                1.66181E+01            1.66181E+01                  0.000002

 the estimated inverse power slope of the 127 largest  tallies starting at 2.18128E-02 is 6.7401
 the empirical history score probability density function appears to be increasing at the largest  history scores:
 please examine. see print table 161.
 the large score tail of the empirical history score probability density function appears to have no unsampled regions.

 fom = (histories/minute)*(f(x) signal-to-noise ratio)**2 = (2.654E+05)*( 7.913E-03)**2 = (2.654E+05)*(6.262E-05) = 1.662E+01

1tally       14        nps =  2547729148
+                              1-M from Package Surface Gamma Dose Rate (mrem/hr) @ Z = 111.12500
           tally type 4    track length estimate of particle flux.
           particle(s): photons
           this tally is modified by dose function DE14 and DF14.

           volumes
                   cell:      301
                        2.02683E+00

 cell  301
                 5.28270E-09 0.0039


 ============================================================================================================================

           results of 10 statistical checks for the estimated answer for the tally fluctuation chart (tfc) bin of tally       14

 tfc bin     --mean--      ---------relative error---------      ----variance of the variance----      --figure of merit--     -pdf-
 behavior    behavior      value   decrease   decrease rate      value   decrease   decrease rate       value     behavior     slope

 desired      random       <0.10      yes      1/sqrt(nps)       <0.10      yes        1/nps          constant    random      >3.00
 observed     random        0.00      yes          yes            0.00      yes         yes           constant    random       8.48
 passed?        yes          yes      yes          yes             yes      yes         yes              yes        yes         yes

 ============================================================================================================================


 this tally meets the statistical criteria used to form confidence intervals: check the tally fluctuation chart to verify.
 the results in other bins associated with this tally may not meet these statistical criteria.

 ----- estimated confidence intervals:  -----

 estimated asymmetric confidence interval(1,2,3 sigma): 5.2621E-09 to 5.3034E-09; 5.2415E-09 to 5.3240E-09; 5.2209E-09 to 5.3446E-09
 estimated  symmetric confidence interval(1,2,3 sigma): 5.2621E-09 to 5.3033E-09; 5.2415E-09 to 5.3239E-09; 5.2208E-09 to 5.3446E-09

1analysis of the results in the tally fluctuation chart bin (tfc) for tally 14 with nps = 2547729148         print table 160


 normed average tally per history  = 5.28270E-09         unnormed average tally per history  = 1.07071E-08
 estimated tally relative error    = 0.0039             estimated variance of the variance  = 0.0000
 relative error from zero tallies  = 0.0029             relative error from nonzero scores  = 0.0026

 number of nonzero history tallies =      115276        efficiency for the nonzero tallies  = 0.0000
 history number of largest  tally  =  2525101600        largest  unnormalized history tally = 2.13481E-03
 (largest  tally)/(average tally)  = 1.99382E+05        (largest  tally)/(avg nonzero tally)= 9.02134E+00

 (confidence interval shift)/mean  = 0.0000             shifted confidence interval center  = 5.28276E-09
```

```
 if the largest  history score sampled so far were to occur on the next history, the tfc bin quantities would change as follows:

      estimated quantities          value at nps          value at nps+1          value(nps+1)/value(nps)-1.

      mean                           5.28270E-09           5.28311E-09                  0.000078
      relative error                 3.90370E-03           3.90417E-03                  0.000123
      variance of the variance       3.62324E-05           3.63647E-05                  0.003651
      shifted center                 5.28276E-09           5.28276E-09                  0.000000
      figure of merit                6.83526E+00           6.83358E+00                 -0.000245

 the estimated inverse power slope of the 198 largest  tallies starting at 9.60280E-04 is 8.4811
 the empirical history score probability density function appears to be increasing at the largest  history scores:
 please examine. see print table 161.
 the large score tail of the empirical history score probability density function appears to have no unsampled regions.

 fom = (histories/minute)*(f(x) signal-to-noise ratio)**2 = (2.654E+05)*( 5.075E-03)**2 = (2.654E+05)*(2.576E-05) = 6.835E+00

1status of the statistical checks used to form confidence intervals for the mean for each tally bin


 tally   result of statistical checks for the tfc bin (the first check not passed is listed) and error magnitude check for all bins

        4   passed the 10 statistical checks for the tally fluctuation chart bin result
         passed all bin error check:     1 tally bins all have relative errors less than 0.10 with no zero bins

       14   passed the 10 statistical checks for the tally fluctuation chart bin result
         passed all bin error check:     1 tally bins all have relative errors less than 0.10 with no zero bins


 the 10 statistical checks are only for the tally fluctuation chart bin and do not apply to other tally bins.

1tally fluctuation charts

                        tally        4                        tally       14
         nps      mean     error   vov  slope    fom      mean     error   vov  slope    fom
    131072000   3.7835E-07 0.0111 0.0001  2.0      16   5.1443E-09 0.0173 0.0007  2.5 6.8E+00
    262144000   3.8218E-07 0.0078 0.0001  1.9      17   5.1508E-09 0.0122 0.0004  1.9 6.7E+00
    393216000   3.8374E-07 0.0064 0.0000  1.6      17   5.1783E-09 0.0100 0.0002  2.8 6.8E+00
    524288000   3.8405E-07 0.0055 0.0000  1.5      17   5.1808E-09 0.0086 0.0002 10.0 6.8E+00
    655360000   3.8391E-07 0.0049 0.0000  1.5      17   5.2055E-09 0.0077 0.0001 10.0 6.8E+00
    786432000   3.8315E-07 0.0045 0.0000 10.0      17   5.2240E-09 0.0070 0.0001  4.2 6.8E+00
    917504000   3.8289E-07 0.0042 0.0000 10.0      17   5.2149E-09 0.0065 0.0001  2.7 6.8E+00
   1048576000   3.8257E-07 0.0039 0.0000 10.0      17   5.2217E-09 0.0061 0.0001  2.1 6.8E+00
   1179648000   3.8264E-07 0.0037 0.0000 10.0      17   5.2255E-09 0.0058 0.0001  2.0 6.8E+00
   1310720000   3.8332E-07 0.0035 0.0000 10.0      17   5.2345E-09 0.0055 0.0001  2.0 6.8E+00
   1441792000   3.8323E-07 0.0033 0.0000 10.0      17   5.2427E-09 0.0052 0.0001  1.9 6.8E+00
   1572864000   3.8283E-07 0.0032 0.0000 10.0      17   5.2610E-09 0.0050 0.0001  2.1 6.8E+00
   1703936000   3.8259E-07 0.0031 0.0000 10.0      17   5.2740E-09 0.0048 0.0001  2.2 6.8E+00
   1835008000   3.8281E-07 0.0029 0.0000 10.0      17   5.2751E-09 0.0046 0.0000  2.5 6.8E+00
   1966080000   3.8269E-07 0.0028 0.0000 10.0      17   5.2753E-09 0.0044 0.0000  3.0 6.8E+00
   2097152000   3.8291E-07 0.0028 0.0000 10.0      17   5.2757E-09 0.0043 0.0000  3.6 6.8E+00
   2228224000   3.8256E-07 0.0027 0.0000 10.0      17   5.2735E-09 0.0042 0.0000  4.7 6.8E+00
   2359296000   3.8277E-07 0.0026 0.0000  7.2      17   5.2841E-09 0.0041 0.0000  6.9 6.8E+00
   2490368000   3.8280E-07 0.0025 0.0000  7.0      17   5.2835E-09 0.0039 0.0000 10.0 6.8E+00
   2547729148   3.8278E-07 0.0025 0.0000  6.7      17   5.2827E-09 0.0039 0.0000  8.5 6.8E+00

 ********************************************************************************************************************************************

 dump no.    8 on file HAC_HP_SC-55G1_252Cf_0.r     nps =  2547729148     coll =   199677585434     ctm =     9600.48
 nrn =     3561588808224
 tally data written to file HAC_HP_SC-55G1_252Cf_0.m

        7 warning messages so far.


 run terminated when it had used 9600  minutes of computer time.

 computer time = 9600.75 minutes

 mcnp     version 6     02/20/18                    08/30/21 04:00:00                    probid =  08/29/21 21:19:57
```

Summary	Pg.
TRUPACT-II SAR, Revision 25	B-2
HalfPACT SAR, Revision 8	B-3
CH-TRAMPAC, Revision 6	B-4
CH-TRU Payload Appendices, Revision 5	B-5
HPT-REP-0001, Revision 1	B-6
SCA-CAL-0005, Revision 0	B-8

TRUPACT-II SAR, Revision 25, October 2021			
Section	**Page**	**Change Description**	**Justification**
General		Revised header for date.	Administrative change. No impact to safety basis.
5.3.1	5.3-1	Deleted the following text: "Any significant deviation from the NCT configuration assumption is precluded through the use of preshipment radiological surveys of the package to validate that the source(s) are reasonably distributed within the package. However, it should be noted that even without the preshipment measurement confirmation, HAC dose rate requirements are ensured by these conservative analysis assumptions."	As described in the response to RAI-Sh-10, the sentences have been removed to avoid confusion and/or conflicting interpretation.
5.3.1.7	5.3-4	Revised Reference 4 from Rev. 0 to Rev. 1.	In response to RAI-St-1, HPT-REP-0001, *Regulatory Hypothetical Accident Condition Type B Testing for the HalfPACT Shielded Container Payloads*, was revised to add the DOT-7A Type A 4-foot drop test results for the SC-55G1.
5.4.5	5.4-13	Added new Section 5.4.5, *Evaluation for Axial Gaps in the Sidewall Lead*	In response to RAI-Sh-8, a new Section 5.4.5 was added to summarize the results of SCA-CAL-0005, *Effect of Axial Gaps in the SC-30G2, SC-30G3, and SC-55G2 Lead Sidewalls.*
5.5.8	5.5-39	Corrected the DCF equation for the SC-55G1 from "$DCF_{SC-55G1} = 0.0051*\rho^3 - 0.0987*\rho^2 + 0.8030*\rho + 0.2342$" to "$DCF_{SC-55G1} = 0.0024*\rho^3 - 0.0668*\rho^2 + 0.7557*\rho + 0.2630$"	In response to RAI-Sh-3, the DCF equation for the SC-55G1 has been corrected in Section 5.5.8 of the TRUPACT-II SAR.

HalfPACT SAR, Revision 8, October 2021			
Section	**Page**	**Change Description**	**Justification**
General		Revised header for date.	Administrative change. No impact to safety basis.

CH-TRAMPAC, Revision 6, October 2021			
Section	**Page**	**Change Description**	**Justification**
General		Revised header for date.	Administrative change. No impact to safety basis.

CH-TRU Payload Appendices, Revision 5, October 2021			
Section	**Page**	**Change Description**	**Justification**
General		Revised header for date.	Administrative change. No impact to safety basis.
4.7	4.7-5	Revised the reference to HPT-REP-0001 from Rev. 0 to Rev. 1.	Administrative change. No impact to safety basis.
4.8	4.8-5	Revised the reference to HPT-REP-0001 from Rev. 0 to Rev. 1.	Administrative change. No impact to safety basis.
4.9	4.9-5	Revised the reference to HPT-REP-0001 from Rev. 0 to Rev. 1.	Administrative change. No impact to safety basis.
4.10	4.10-5	Revised the reference to HPT-REP-0001 from Rev. 0 to Rev. 1.	Administrative change. No impact to safety basis.

HPT-REP-0001, Revision 1, October 2021			
Section	**Page**	**Change Description**	**Justification**
General	Various	Revised text to consistently use “HAC Type B” and “DOT-7A Type” terms to differentiate tests.	Administrative change.
1.2	1	Added text to clarify testing performed previously for the SC-30G1.	In response to RAI-St-1; text added to clarify that Type A 4-foot drop tests are to support certification of shielded containers as DOT-7A Type A packaging in accordance with 49 CFR §178.350 requirements. Added text to help distinguish the difference between drop tests.
1.2	2	Inserted a table and text providing a summary of all Type A and Type B drop testing.	In response to RAI-St-1, the revisions summarize the drop tests that were performed for each shielded container.
2.0	3	Added Reference 11 for new SCA-CAL-0005, *Effect of Axial Gaps in the SC-30G2, SC-30G3, and SC-55G2 Lead Sidewalls*, Rev. 0.	In response to RAI-Sh-08, SCA-CAL-0005, *Effect of Axial Gaps in the SC-30G2, SC-30G3, and SC-55G2 Lead Sidewalls* was developed and is now referenced in HPT-REP-0001, Rev. 1.
6.1	31	Added new Section 6.1.1, *SC-55G1 Shielded Container HAC Type B Tests* (heading only).	This section heading was added to clarify that Section 6.1.1 is specific to the HAC Type B 30-foot drop tests.
6.1.2	45	Added new Section 6.1.2, *SC-55G1 Shielded Container DOT-7A Type A Tests* (heading only).	This section heading was added to clarify that Section 6.1.2 is specific to the DOT-7A Type A tests.
6.1.2.1	45 – 47	Added new Section 6.1.2.1, *SC-55G1 Free Drop Tests*.	In response to RAI-St-1(b), Section 6.1.2.1 was added to discuss the DOT-7A Type A 4-foot drop tests that were conducted on the SC-55G1.
6.2	48	Added new Section 6.2.1, *SC-30G3 Shielded Container HAC Type B Tests* (heading only).	This section heading was added to clarify that Section 6.2.1 is specific to the HAC Type B 30-foot drop tests.
6.2.1.2.1	48	Added reference to Figure 6-30.	Administrative change. No impact to safety basis.
6.2.1.2.2	49	Changed to reference Figure 6-33.	Administrative change. No impact to safety basis.
6.2.1.2.3	49	Changed to reference Figure 6-30.	Administrative change. No impact to safety basis.

HPT-REP-0001, Revision 1, October 2021			
Section	**Page**	**Change Description**	**Justification**
6.2.1.2.3	51	Moved Figure 6.30 – Pre-End Drop Relative Position of the SC-30G3 Lateral Dunnage.	Administrative change. No impact to safety basis.
6.2.1.2.3	53	Corrected figure title of Figure 6.33 – SC-30G3 Side Drop Radial Flattening of the ICV Shell.	Administrative change. No impact to safety basis.
6.2.1.3, 7.1.2.2, 7.1.3.2,	60, 87, 101	Revised text to reference the new shielding evaluation as Reference 11.	In response to RAI-Sh-08, SCA-CAL-0005, *Effect of Axial Gaps in the SC-30G2, SC-30G3, and SC-55G2 Lead Sidewalls*, was developed.
6.2.2	68 – 79	Added new Section 6.2.2, *SC-30G3 Shielded Container DOT-7A Type A Tests*.	In response to RAI-St-01(b), Section 6.2.2 was added to discuss the DOT-7A Type A 4-foot drop tests that were conducted on the SC-30G3.
7.1.1	80 – 83	Revised Section 7.1.1, *Type B HAC Test versus DOT-7A Type A Test Comparison,* and added new Section 7.1.1.1, *SC-30G3 Visible Damage Comparison*. Also revised heading for Section 7.1.1.2, *SC-30G3 Impact Acceleration Comparison*.	In response to RAI-St-01(b), revised Section 7.1.1 and added Section 7.1.1.1 to clarify the basis for comparison of visible damage between DOT-7A Type A (bare) 4-foot drops versus the HAC Type B (protected) 30-foot drops.

SCA-CAL-0005, Revision 0, October 2021			
Section	**Page**	**Change Description**	**Justification**
All	All	New document provided as part of RAI Response: SCA-CAL-0005, *Effect of Axial Gaps in the SC-30G2, SC-30G3, and SC-55G2 Lead Sidewalls*, Rev. 0.	In response to RAI-Sh-08, SCA-CAL-0005, *Effect of Axial Gaps in the SC-30G2, SC-30G3, and SC-55G2 Lead Sidewalls* was developed.