Watts Bar Nuclear Plant

Watts Bar Nuclear Plant (WBN)

Pre-Submittal Meeting for Proposed License Amendment Request Regarding Application to Modify Watts Bar Nuclear Plant Units 1 and 2 Technical Specifications (TS) 3.7.8, “Essential Raw Cooling Water (ERCW) System,” to Support Permanent Shutdown Board Cleaning

August 19, 2021

TVA TENNESSEE VALLEY AUTHORITY

Agenda

- Opening Remarks
- Background
- System Overview
- Overview of the 6.9 kilovolt (kV) Shutdown Board (SDBD) Maintenance Activities
- Proposed Changes to WBN 1 and 2 TS and Updated Final Safety Analysis Report (UFSAR)
- Basis for Change
- Technical Evaluation
- Regulatory Precedent
- Schedule for Submittal
- Closing Remarks

Opening Remarks

- This license amendment request (LAR) proposes a permanent extension of the WBN Units 1 and 2 Technical Specification (TS) 3.7.8 “ Essential Raw Cooling Water (ERCW) System” completion time from 72 hours to 7 days to perform scheduled maintenance activities on a 6.9kV SDBD and associated 480V boards and motor control centers (MCC) when a WBN unit is in a outage and is defueled.
- To support this LAR, limiting ultimate heat sink (UHS) temperature of ≤ 78°F is proposed within the TS 3.7.8.
- Due to the commonality of the WBN 6.9kV SDBD loads, performing maintenance on a 6.9kV SDBD during a WBN refueling outage affects the ERCW system on the operating unit.
- With regard to the ERCW system currently, WBN TS require two ERCW pumps aligned to separate 6.9kV SDBDs to be operable per train, with two trains required for each unit. Consequently, this requires all four 6.9 kV SDBDs to be operable to support the ERCW pump TS requirement.
- This change is needed to support the shutdown board cleaning planned for the WBN Unit 1 Cycle 18 refueling outage (U1R18) scheduled for spring 2023.

Background

- WBN Unit 2 License Amendment 35 dated February 24, 2020 (ML20024F835), revised WBN Unit 2, Technical Specification 3.7.8 to extend the allowed Completion Time to restore one ERCW System train to operable status from 72 hours to seven days, on a one-time basis.
- The revision to WBN Unit 2 TS 3.7.8 was contingent on the following:
  - Only applicable during the Unit 1 spring 2020 outage but no later than May 31, 2020.
  - Only applicable when Unit 1 is defueled.
  - Only applicable during planned maintenance on 6.9 kV SDBD 1 A-A and associated 480 V boards and MCC.
  - UHS Temperature of ≤ 71°F.
- Similar changes are needed to the Unit 1 and 2 TS 3.7.8 to support future and ongoing maintenance of the 6.9 kV SDBDs and associated 480 V boards and MCCs for both units.

System Overview

- The ERCW System is a common two-train system with each train having the capability to provide the required cooling water for both units under any credible plant condition.
- These ERCW System trains are independent and redundant.
- Each train of the ERCW system has four pumps total. As noted in the bases of WBN TS 3.7.8, for operating modes 1-4, two ERCW pumps aligned to separate 6.9kV SDBDs are required to be operable per train, with two trains required for each unit.
- The ERCW system has been analyzed for "worst case" heat loads under combinations of maximum river water temperature, design basis accident conditions, normal cooldown requirements, power train failures, for both units.
- The ERCW system has sufficient pump capacity for cooling water flows under all conditions and the system is arranged in such a way that even a complete header loss can be isolated in a manner that does not jeopardize plant safety.

System Overview (cont'd)

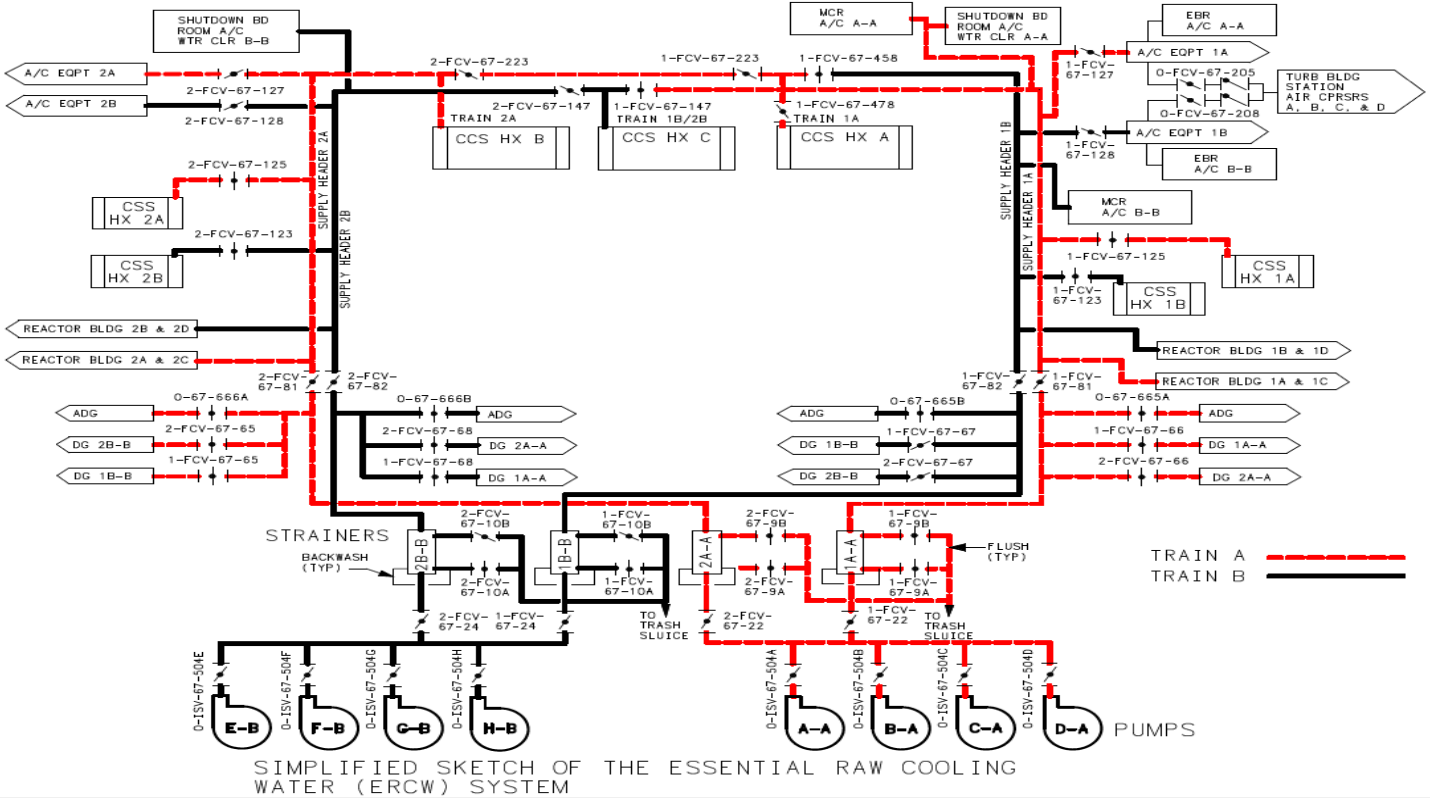

SIMPLIFIED SKETCH OF THE ESSENTIAL RAW COOLING WATER (ERCW) SYSTEM

TENNESSEE VALLEY AUTHORITY

ERCW Pump Motor Electrical Board Alignment

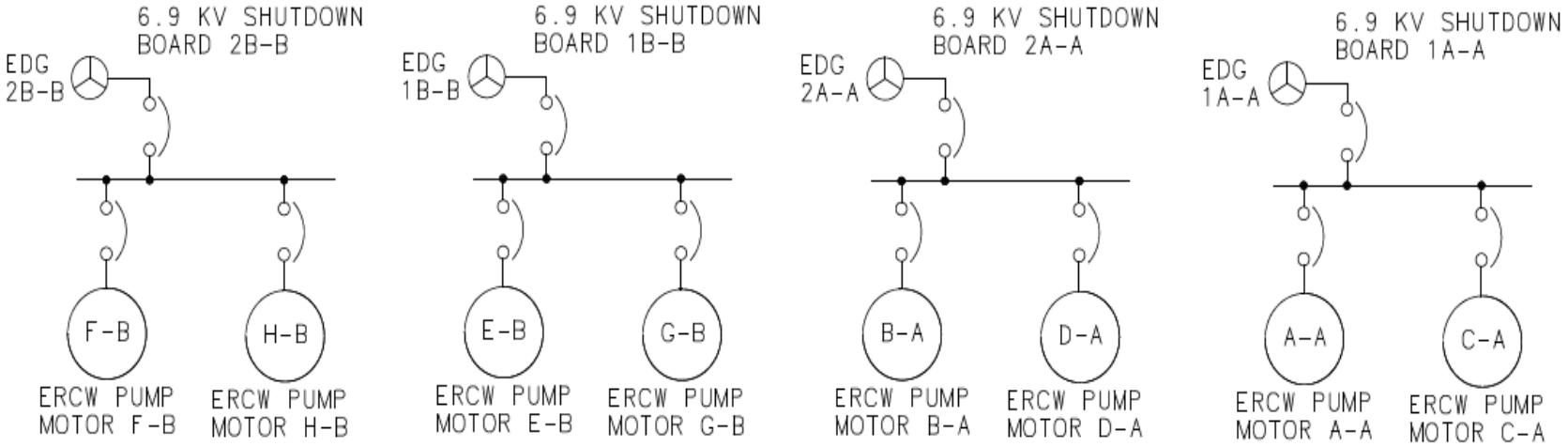

Overview of 6.9kV SDBD Maintenance

- Maintenance activities performed during a 6.9kV SDBD board outage include:
  - Breaker compartment inspections
    - Indicating light resistor replacements
    - Fuse blocks
    - Relays and instruments
  - Circuit breaker interface inspections and adjustments
    - Primary/Secondary disconnects
    - Shutter inspection
    - Breaker position and interface measurements and adjustments
  - Bus inspections and tests
    - As-found and as-left insulation resistance (megger) testing
    - Torque checks

Overview of 6.9kV SDBD Maintenance (cont'd)

Shutdown Board Maintenance Timeline		
	Activity	Duration
1	Install Clearance	6 Hours
2	Ground Installation	4.5 Hours
3	Breaker Compartment Inspections	42 Hours
4	Circuit Breaker Interface Inspections and Adjustments	34 Hours
5	Bus Inspections and Tests	8 Hours
6	Ground Removal	4.5 Hours
7	Release Clearance	6 Hours
	Total	105 Hours

- 105 Hours are needed to support the SDBD board outage activities.
- Remaining duration of the TS change allows for a contingency should the maintenance activities identify the need for an unexpected repair.

Proposed Technical Specification Changes for WBN Unit 2

- TS 3.7.8 Condition A is modified as follows:
  - Delete current Note 1 which states: “Only applicable during the Unit 1 spring 2020 outage (U1R16), but no later than May 31, 2020.”
  - Note 2 is re-sequenced to Note 1: “Only applicable when Unit 1 is defueled”.
  - Note 3 is re-sequenced as Note 2 and is revised to state: “Only applicable during planned maintenance of a Unit 1 6.9kV SDBD and the associated 480V boards and motor control centers.”
  - Revise the UHS temperature in the Completion Time for Required Action A.1 and for Required Action A.2 from 71ºF to 78ºF.
  - Minor correction to Condition C to note that it applies to all of Condition A .

Proposed Technical Specification Changes for WBN Unit 2

3.7 PLANT SYSTEMS

3.7.8 Essential Raw Cooling Water (ERCW) System

LCO 3.7.8 Two ERCW trains shall be OPERABLE.

APPLICABILITY: MODES 1, 2, 3, and 4.

ACTIONS

CONDITION	REQUIRED ACTION	COMPLETION TIME
----------NOTES---------- 1. ~~Only applicable during the Unit 1 spring 2020 outage (U1R16), but no later than May 31, 2020.~~ ~~2.~~ Only applicable when Unit 1 is defueled. ~~3~~2. Only applicable during planned maintenance of a Unit 1 ~~n~~ 6.9 kV shutdown board and the ~~1 A-A and~~ associated 480 V boards and motor control centers. ---------- A. One ERCW train inoperable.	A.1 ----------NOTES---------- 1. Enter applicable Conditions and Required Actions of LCO 3.8.1, "AC Sources - Operating," for diesel generator made inoperable by ERCW. 2. Enter applicable Conditions and Required Actions of LCO 3.4.6, "RCS Loops - MODE 4," for residual heat removal loops made inoperable by ERCW. ---------- Restore ERCW train to OPERABLE status.	7 days <u>AND</u> 24 hours from discovery of Condition A entry ≥ 48 hours concurrent with UHS temperature > 7~~1~~8 °F

AND

TENNESSEE VALLEY AUTHORITY

Proposed Technical Specification Changes for WBN Unit 2

ACTIONS (continued)

CONDITION	REQUIRED ACTION		COMPLETION TIME
A. (continued)	A.2	Verify UHS temperature is ≤ 7~~1~~8° F.	1 hour AND Once every 12 hours thereafter
C. Required Action ~~A.1~~ and associated Completion Time of Condition A not met. OR Required Action and associated Completion Time of Condition B not met.	C.1 AND C.2	Be in MODE 3. Be in MODE 5.	6 hours 36 hours

SSEE
TVA AUTHORITY

Proposed Technical Specification Changes for WBN Unit 1

- Similar to the changes to the WBN Unit 2 TS
- New WBN Unit 1 TS 3.7.8 Condition A to increase the completion time for an inoperable ERCW Train from 72 hours to 7 days with the following Notes:
  1. Only applicable when WBN 2 unit is defueled.
  2. Only applicable during planned maintenance of a Unit 2 6.9kV SDBD and the associated 480V boards and MCC.
- Both Notes are required to be met in order to use Condition A .
- The Required Actions and Completion Times of WBN Unit 1 TS 3.7.8 Condition A are modified to be consistent with the WBN Unit 2 TS.
- WBN Unit 1 TS 3.7.8 Conditions B and C are modified identical to the WBN Unit 2 TS changes.

Proposed Technical Specification Changes for WBN Unit 1

3.7 PLANT SYSTEMS

3.7.8 Essential Raw Cooling Water (ERCW) System

LCO 3.7.8 Two ERCW trains shall be OPERABLE.

APPLICABILITY: MODES 1, 2, 3, and 4.

ACTIONS

CONDITION	REQUIRED ACTION	COMPLETION TIME
----------NOTES---------- 1. Only applicable when Unit 2 is defueled. 2. Only applicable during planned maintenance of a Unit 2 6.9kV shutdown board and the associated 480V boards and motor control centers. ---------- A. One ERCW train inoperable.	A.1 ----------NOTES---------- 1. Enter applicable Conditions and Required Actions of LCO 3.8.1, "AC Sources- Operating," for diesel generator made inoperable by ERCW. 2. Enter applicable Conditions and Required Actions of LCO 3.4.6, "RCS Loops-MODE 4," for residual heat removal loops made inoperable by ERCW. ---------- Restore ERCW train to OPERABLE status. AND	7 days AND 24 hours from discovery of Condition A entry ≥ 48 hours concurrent with UHS temperature > 78°F.

(continued)

TENNESSEE VALLEY AUTHORITY

Proposed Technical Specification Changes for WBN Unit 1

ACTIONS (continued)

CONDITION	REQUIRED ACTION	COMPLETION TIME
A. (continued)	A.2 Verify UHS temperature is ≤ 78°F.	1 hour AND Once every 12 hours thereafter.
~~A~~B. One ERCW train inoperable for reasons other than Condition A~~, other than for Condition C~~.	~~A~~B.1 ----------NOTES---------- 1. Enter applicable Conditions and Required Actions of LCO 3.8.1, "AC Sources- Operating," for emergency diesel generator made inoperable by ERCW. 2. Enter applicable Conditions and Required Actions of LCO 3.4.6, "RCS Loops-MODE 4," for residual heat removal loops made inoperable by ERCW. ---------- Restore ERCW train OPERABLE status.	72 hours
~~B~~C. Required Action and associated Completion Time of Condition A not met. OR Required Action and associated Completion Time of Condition B not met.	~~B~~C.1 Be in MODE 3. AND ~~B~~C.2 Be in MODE 5.	6 hours 36 hours

TENNESSEE VALLEY AUTHORITY

Proposed WBN UFSAR Change (for NRC Information Only)

WBN UFSAR Section 9.2.1.3 will be revised to reflect the new ERCW system alignments needed to support SDBD maintenance

(as indicated in the revised TS 3.7.8 Bases)

Insert 1 for WBN UFSAR Chapter 9.2

5. Under design basis accident conditions with one unit in Mode 6 for more than 100 hours and one 6.9 kV Shutdown Board out of service, a single ERCW pump can supply the highest flow / decay heat demand of one unit in Cold Shutdown and the other in LOCA-Recirculation with the Ultimate Heat Sink temperature ≤ 78°.

The following list identifies the component configuration required to meet the Design Function of a single ERCW Loop with one operating ERCW pump and one 6.9kV Shutdown Board Out of Service:

For Unit 1 Train A One Pump Operation with 2A-A SDB Out of Service:

ERCW flow is isolated to the following components:

- 2A-A Diesel Generator Heat Exchangers;
- Unit 2 Containment Spray Heat Exchanger 2A;
- Component Cooling System B Heat Exchanger,
- ERCW Strainer 2A-A
- Lower Containment Vent Cooler 2A, Control Rod Drive Vent Cooler 2A, and Reactor Coolant Pump 2-1 Motor Cooler;
- Lower Containment Vent Cooler 2C, Control Rod Drive Vent Cooler 2C, and Reactor Coolant Pump 2-3 Motor Cooler;
- Upper Containment Vent Cooler 2A;
- Upper Containment Vent Cooler 2C;
- Shutdown Board Room Water Chiller A-A
- Electric Board Room Water Chiller A-A, and
- Incore Instrumentation Room Water Chiller 2A.

The following components are in service:

- Train A ERCW Pump A-A or C-A,
- Auxiliary Control Air System C-S, and
- Train A ERCW 24-inch strainer discharge crosstie.

For Unit 1 Train B One Pump Operation with 2B-B SDB Out of Service:

ERCW flow is isolated to the following components:

- 2B-B Diesel Generator Heat Exchangers;
- Unit 2 Containment Spray Heat Exchanger 2B;
- ERCW Strainer 2B-B
- Lower Containment Ventilation Cooler 2B, Control Rod Drive Vent Cooler 2B, and Reactor Coolant Pump 2-2 Motor Cooler;
- Lower Containment Ventilation Coolers 2D, Control Rod Drive Vent Cooler 2D, and Reactor Coolant Pump 2-4 Motor Cooler;
- Upper Containment Ventilation Coolers 2B;
- Upper Containment Ventilation Coolers 2D;
- Electric Board Room Water Chiller B-B,
- Incore Instrumentation Room Water Cooler 2B, and
- Auxiliary Control Air System B.

The following components are in service:

- Train B ERCW Pump E-B or G-B,

TENNESSEE VALLEY AUTHORITY

Proposed WBN UFSAR Change (for NRC Information Only)

WBN UFSAR Section 9.2.1.3 will be revised to reflect the new ERCW system alignments needed to support SDBD maintenance

(as indicated in the revised TS 3.7.8 Bases)

Insert 1 for WBN UFSAR Chapter 9.2

- Train B ERCW 24-inch strainer discharge crosstie, and
- Auxiliary Control Air System C-S.

For Unit 2 Train A One Pump Operation with 1A-A SDB Out of Service:

ERCW flow is isolated to the following components:

- 1A-A Diesel Generator Heat Exchangers;
- Unit 1 Containment Spray Heat Exchanger 1A;
- Component Cooling System A Heat Exchanger,
- ERCW Strainer 1A-A
- Lower Containment Vent Cooler 1A, Control Rod Drive Vent Cooler 1A, and Reactor Coolant Pump 1-1 Motor Cooler;
- Lower Containment Vent Cooler 1C, Control Rod Drive Vent Cooler 1C, and Reactor Coolant Pump 1-3 Motor Cooler;
- Upper Containment Ventilation Coolers 1A;
- Upper Containment Ventilation Coolers 1C;
- Main Control Room Water Chiller A-A, and
- Incore Instrumentation Room Water Cooler 1A.

The following components are in service:

- Train A ERCW Pump B-A or D-A, and
- Train A ERCW 24-inch strainer discharge crosstie.

For Unit 2 Train B One Pump Operation with 1B-B SDB Out of Service:

ERCW flow is isolated to the following components:

- 1B-B Diesel Generator Heat Exchangers;
- Unit 1 Containment Spray Heat Exchanger 1B;
- ERCW Strainer 1B-B,
- Lower Containment Ventilation Cooler 1B, Control Rod Drive Vent Cooler 1B, and Reactor Coolant Pump 1-2 Motor Cooler;
- Lower Containment Ventilation Coolers 1D, Control Rod Drive Vent Cooler 1D, and Reactor Coolant Pump 1-4 Motor Cooler;
- Upper Containment Ventilation Coolers 1B;
- Upper Containment Ventilation Coolers 1D;
- Main Control Room Water Chiller B-B,
- Shutdown Board Room Water Chiller B-B, and
- Incore Instrumentation Room Water Cooler 1B.

The following components are in service:

- Train B ERCW Pump F-B or H-B, and
- Train B ERCW 24-inch strainer discharge crosstie.

TVA TENNESSEE VALLEY AUTHORITY

Basis for Proposed TS Changes

- TVA employs a graded approach to defense in depth (DID) and protected equipment strategies when equipment is removed from service
  - NPG-SPP-07.0 “Work Management”
    - This program incorporates risk assessment methodologies and contingency processes to maximize personnel safety, plant safety, plant reliability, and worker productivity during plant modifications, maintenance, and testing.
  - Includes both Online Work Management and Outage Management
    - NPG-SPP-07.1 “On Line Work Management” provides the guidance for the implementing work management process that promotes personnel/nuclear safety, access plant risk, maximize plant reliability, and improve schedule credibility/stability.
    - NPG-SPP-07.2 “Outage Management” provides guidance for the development and risk assessment of the outage schedule
  - NPG-SPP-07.3.4 “Protected Equipment”
    - “Provides guidance for protecting plant equipment in order to minimize the potential for adverse operational events.

Basis for Proposed Change (cont'd)

- DID (cont.)
  - Engineering analyses have been performed with a single ERCW pump powered from the 6.9kV SDBD in operation under the following bases:
    - » Design basis accident on the WBN operating unit
    - » Loss of offsite power
    - » WBN Unit in a outage with 100 hour limit prior to irradiated fuel movement (WBN TS 3.9.10)
    - » WBN outage unit is defueled
    - » Unnecessary ERCW cooling loads isolated on the WBN outage Unit .
    - » A 6.9kV SDBD and associated 480V boards are out of service
    - » The ERCW train not impacted by the maintenance activities assumed failed
    - » UHS temperature of ≤ 78°F
  - Each SDBD outage scenario is evaluated
  - These analyses conclude that a single ERCW pump powered from the available 6.9kV SDBD can supply sufficient heat removal, while maintaining the outlet piping thermal stress temperature limits

Technical Evaluation

- Hydraulic Proto-Flo model is used for the ERCW analyses
  - Proto-Flo model was modified to reflect the ERCW one pump configuration powered from the available 6.9kV SDBD
  - Reconfigured flow rates were compared to the analyzed flow rates for required equipment
    - For components where flow rates are less than analyzed;
      - ERCW temperature versus ERCW flow curves were developed to determine the maximum allowable temperature for the one pump ERCW operation.
        - PROTO-HX was used to determine the ERCW temperature required for available flow rate for heat exchangers and discharge piping temperature limits
        - Heat transfer analyses were used for the shutdown board room and electric board room chiller performance
  - The UHS temperature of 78°F ensures the required ERCW loads have sufficient cooling, while maintaining the outlet piping thermal stress temperature limits.

Technical Evaluation (cont'd)

- Conservatism in the analyses include
  - ERCW minimum pump performance curve by specifying a lower bounding head versus flow curve relative to the vendor pump curves.
  - Predicted flow rates for a single ERCW pump performance are reduced by 5% in the ERCW hydraulic analyses to account for analysis uncertainties
  - 100 gallon per minute (gpm) system leakage loss is assumed in the analyses. This accounts for any unidentified system leakage which is in excess of typical system leakage under normal operating conditions.
- Hardware change supporting/credited in the ERCW analyses
  - To improve ERCW flow margin, the component cooling system (CCS) train B heat exchanger post accident flow control valve will be replaced and relocated to improve flow balance between the two ERCW discharge headers
  - This new valve installation is scheduled for implementation in U1R17 (Fall 2021)

Technical Evaluation (cont'd)

A review of the past six years of plant data has shown that the ERCW spring and fall seasonal maximum temperatures remain below the proposed limit of 78ºF.

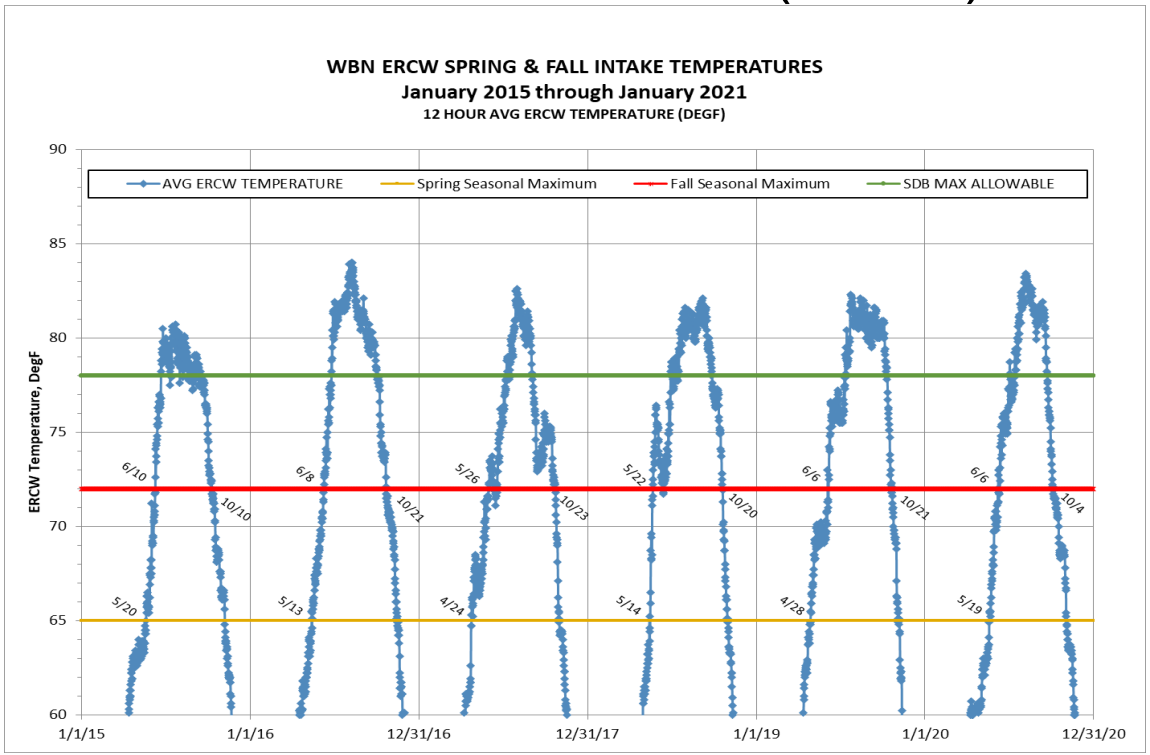

TENNESSEE VALLEY AUTHORITY

Technical Evaluation (cont'd)

Further review of the histogram for WBN spring outage timeframes show the spring seasonal temperature history relative to the proposed SDBD cleaning maximum ERCW temperature analytical limit of 78°F. Spring outages are typically in the March to May timeframe

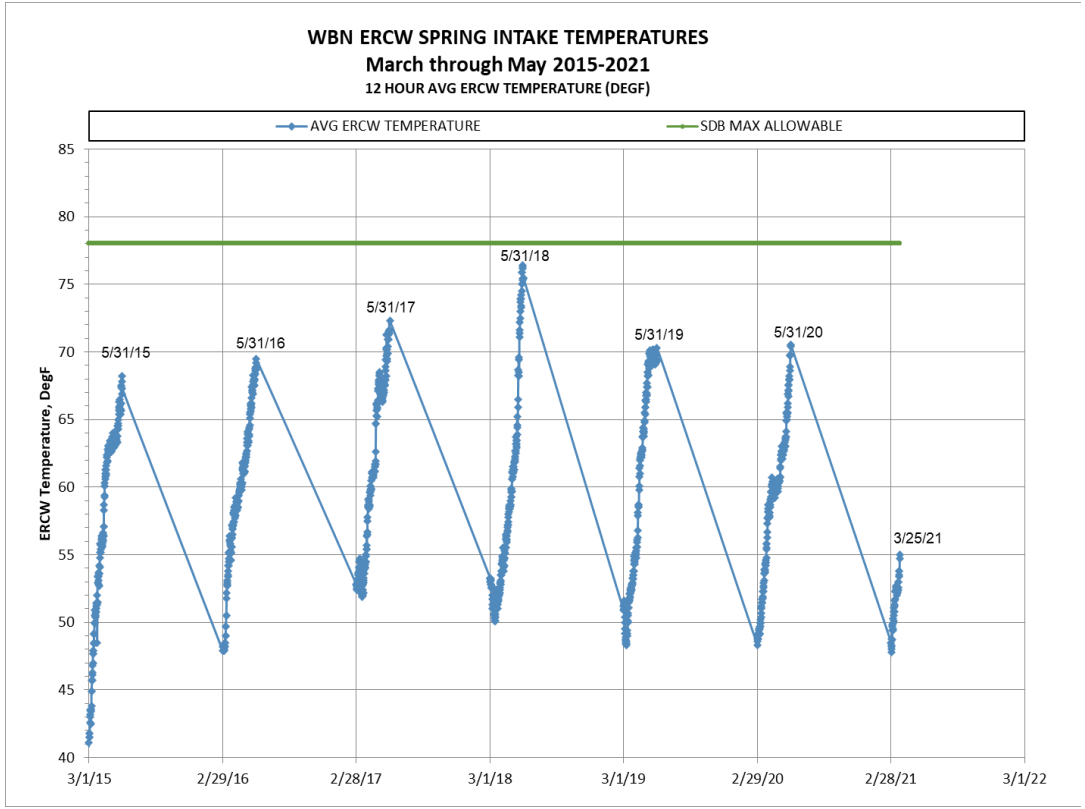

TENNESSEE VALLEY AUTHORITY

Technical Evaluation (cont'd)

Further review of the histogram for WBN fall outage timeframes show the fall seasonal temperature history relative to the proposed SDBD cleaning ERCW temperature limit of 78°F. Fall outages typically begin in the late September-early October timeframe

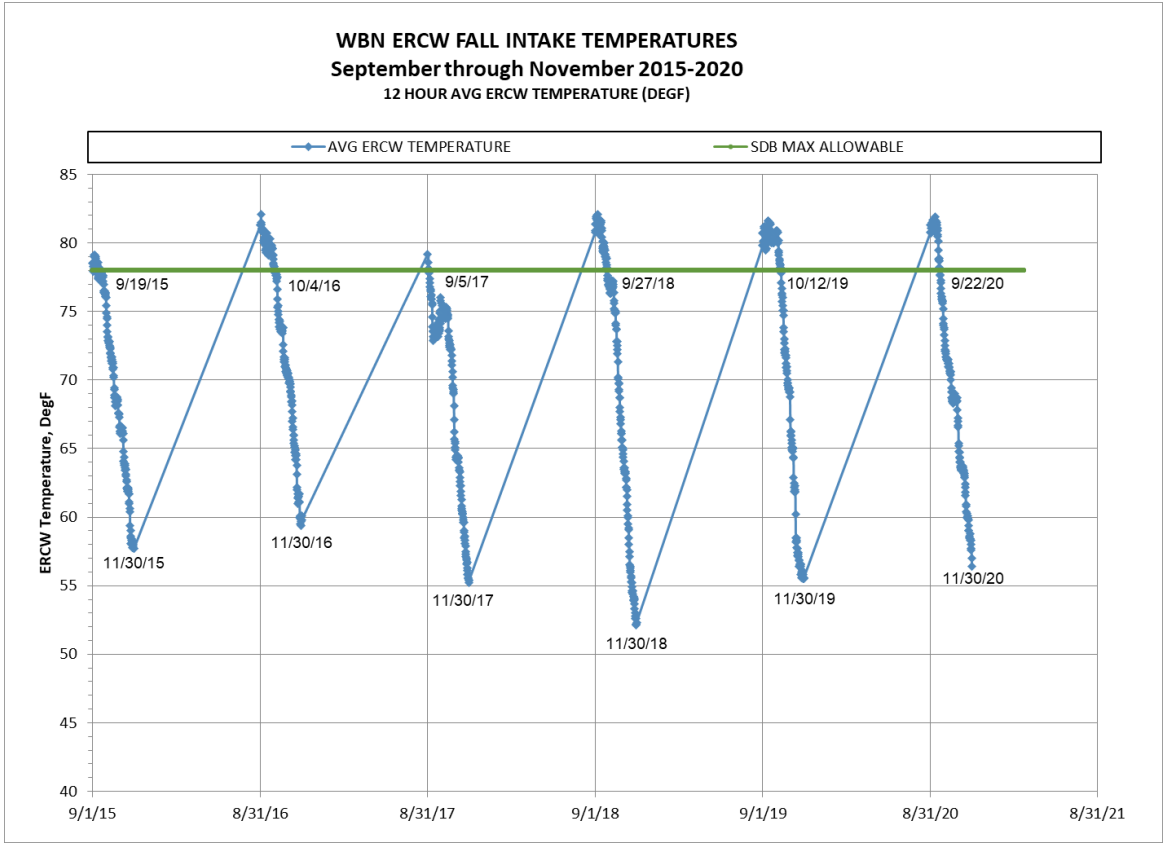

TENNESSEE VALLEY AUTHORITY

Precedent

- As previously noted, this LAR is similar in nature to the NRC-approved one-time revision to WBN Unit 2, TS 3.7.8 to extend the allowed Completion Time to restore one ERCW System train to operable status from 72 hours to seven days to support maintenance on the WBN Unit 1 6.9 kV SDBD 1A-A and associated 480 V boards and MCCs (ML20024F835).
- The proposed LAR is also consistent with the license amendment approved by the NRC for the Sequoyah Nuclear Plant (SQN), that also made a change to TS 3.7.8 for SQN Units 1 and 2 (ML16225A276), which added a new Condition A to TS 3.7.8 with a completion time of seven days and a limiting UHS temperature of 79°F.

Schedule Milestones

- August 19, 2021 - Pre-submittal meeting with NRC
- September 30, 2021 - LAR Submittal – Request NRC approval within 12 months of submittal with 30-day implementation
- September 30, 2022 – NRC Approval of LAR (Requested)
- WBN Unit 1 Cycle 18 refueling outage (U1R18) scheduled for spring 2023

Closing Remarks

- Proposed WBN TS change is needed to support scheduled maintenance activities of the 6.9kV SDBDs during refueling outages at WBN.
- Due to the commonality of the 6.9kV SDBDs, performing maintenance on a 6.9kV SDBD during a WBN Unit refueling outage affects operability of the ERCW system for the operating WBN Unit .
- The change will extend the WBN TS 3.7.8 completion time from 72 hours to 7 days to support maintenance activities on a SDBD when the other WBN Unit is in operation provided UHS temperature is ≤ 78°F.
- This change is needed to support the U1R18 outage scheduled for Spring 2023.

TVA

TENNESSEE
VALLEY
AUTHORITY