SPARE BREAKERS IN PANELS

DPN1HB-ED
1 - 125AT
2 - 150AT
2 - 200AT
1 - 400AT
7 SPACES-100AF-2 POLE
5 SPACES-225AF-2 POLE

DPN1HB1-ED
2 - 15AT
1 - 20AT
13 SPACES-100AF-2 POLE

DPN1HB2-ED
2 - 15AT
3 - 20AT
3 - 30AT
9 SPACES-100AF-2 POLE

DPN1HB3-ED
3 - 20AT
4 - 30AT
1 - 50AT
4 SPACES-100AF-2 POLE

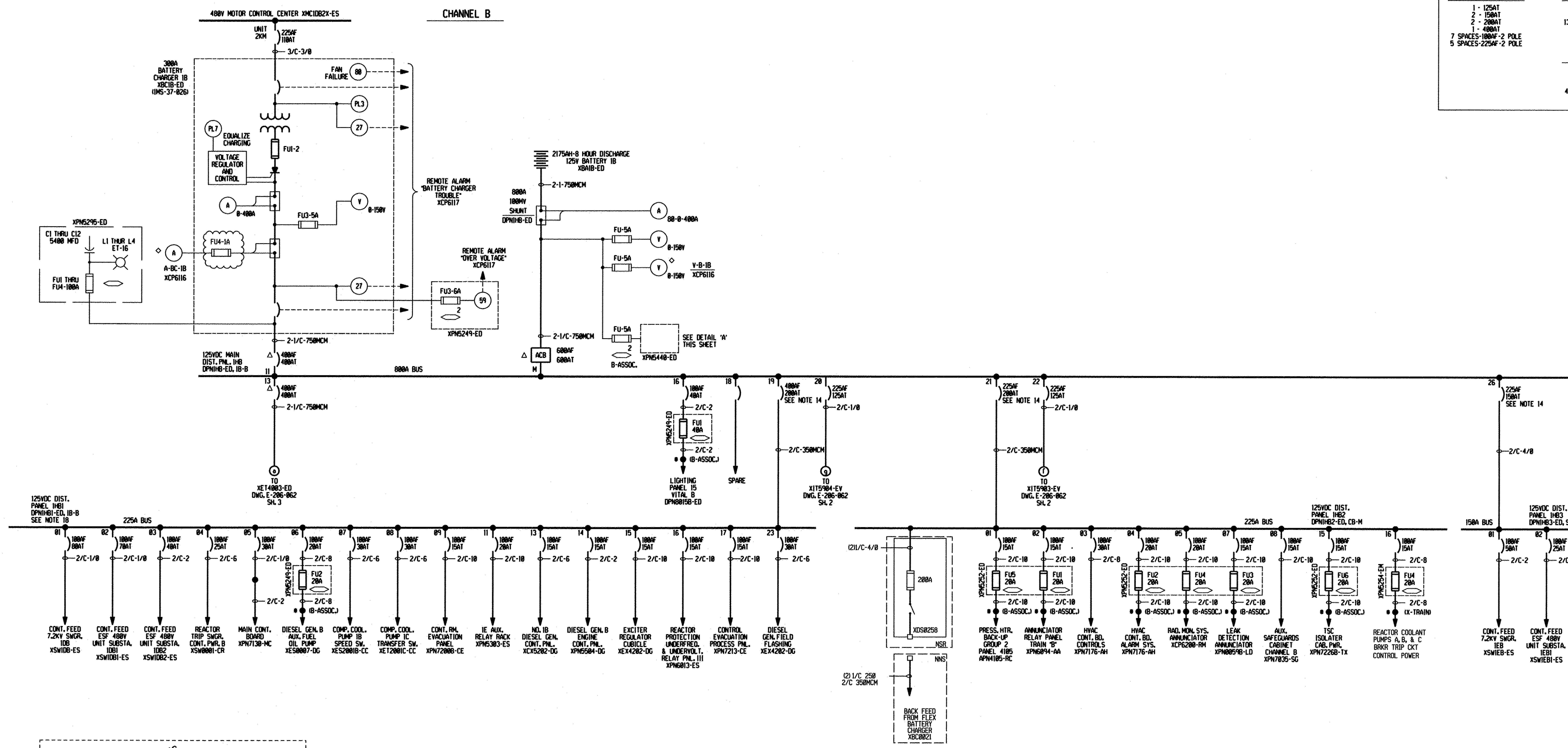

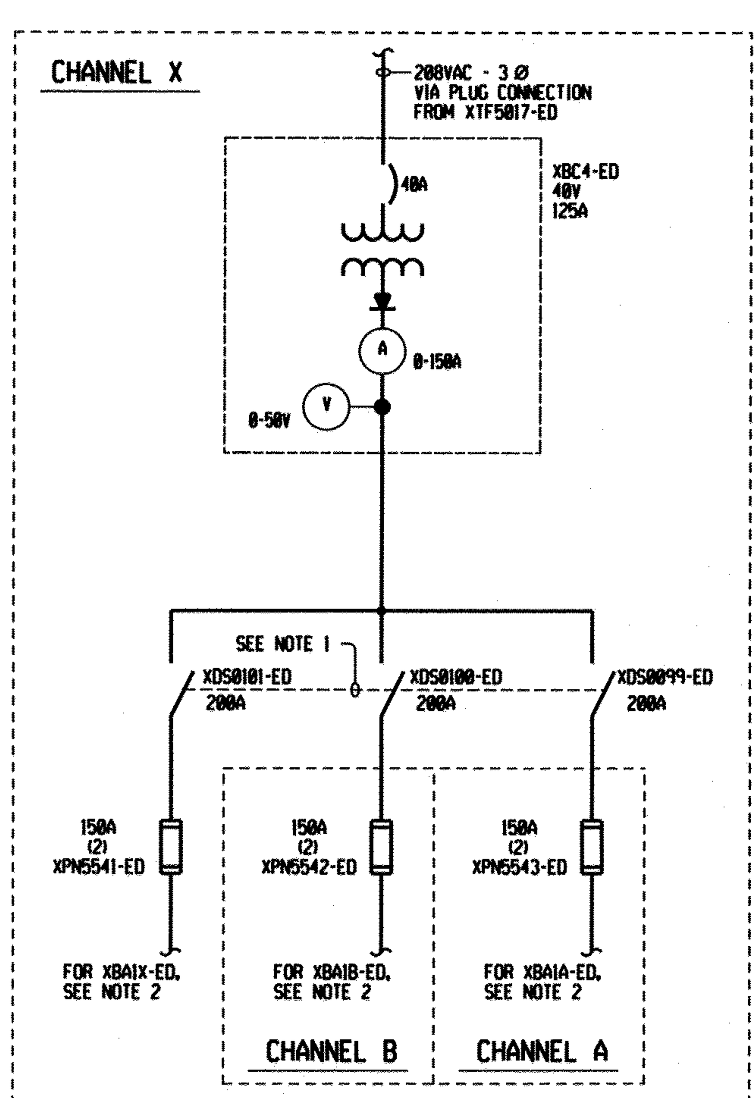

SINGLE CELL BATTERY CHARGER SYSTEM

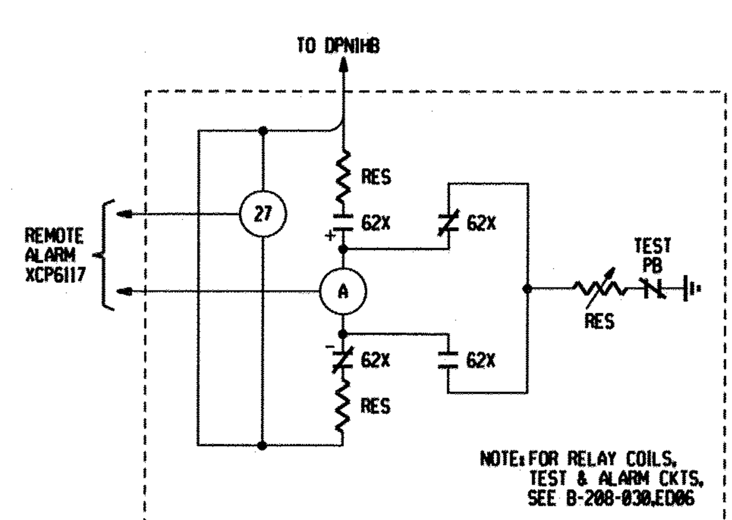

DETAIL 'A'

SYSTEM GROUND DETECTOR FOR 'B' TRAIN

NOTES:

1. CONTROLLED BY A PLANT ADMINISTRATIVE PROCEDURE AND PADLOCKED TO PREVENT TIEING TWO OR MORE 125VDC SYSTEMS TOGETHER.
2. CLIP PLACEMENT ON BATTERY AND CABLE LAYDOWN SHALL BE IN ACCORDANCE WITH PLANT ADMINISTRATIVE PROCEDURES.
3. FOR ADDITIONAL NOTES, SEE DRAWING E-206-062, SHEET 1.

1/4"=1'-0" 0' 5' 10' 15' 20'

NUCLEAR SAFETY RELATED

DRAWING LEGIBILITY CLASS 1

NO.	DATE	BY	REVISION	CKD. BY	LE APPROVAL
8	2/18/16	KO	REVISED PER ECR-50810	RM	RAH
7	1/6/16	JMR	REVISED PER ECR-51006	RHM	BB
6	9/21/01	DDJ	REVISED PER ECR-70028	MGR	DDJ

FSAR Figure 8.3–2ab

SOUTH CAROLINA ELECTRIC & GAS COMPANY
VIRGIL C. SUMMER NUCLEAR STATION
ELECTRICAL
ONE LINE AND RELAY DIAGRAM
ENGINEERED SAFETY FEATURES VITAL DC SYSTEM
SCE&G A SCANA COMPANY — DESIGN ENGINEERING — V. C. SUMMER NUCLEAR STATION JENKINSVILLE, S. C.

MADE	CHECKED	LE APPROVAL
1. DRG	2. CWH	3. SMC

SCALE: NO SCALE | DRAWING NUMBER: E-206-062 | SHT. NUMBER: 4 | REV: 8