SYSTEM OPERATING DATA NOTE 10

#	AIR FLOW CFM	AIR TEMP. • F
3	900	19-120
4	19000	95-200
5	3000	19/120
6	14000	19/95

FAN OPERATION NOTES:

A. VENTILATION FANS XFN0200 AND XFN0202 OPERATE AT ALL TIMES. IF A LOSS OF FLOW IS DETECTED AN ALARM IS GENERATED AND ADDITIONAL FANS ARE STARTED AUTOMATICALLY.

B. XFN0204 STARTS AUTOMATICALLY WHEN XEG0103 IS STARTED. XFN0203 AND XFN0205 WILL START AUTOMATICALLY IF DG ROOM TEMPERATURE INCREASES ABOVE 80 DEG F AND DG IS RUNNING. XFN0203 AND XFN0205 WILL SECURE IF ROOM TEMPERATURE DROPS BELOW 60 DEG F.

C. HVAC ALARMS ARE INDICATED ON XPN5387. GENERAL "EB HVAC TROUBLE ALARM" IS INDICATED ON TEMP MONITORING SYSTEM AND ANNUNCIATED IN MAIN CONTROL ROOM.

D. COMMON LOW DG COOLING FLOW ALARM LIGHT ON XPN5387.

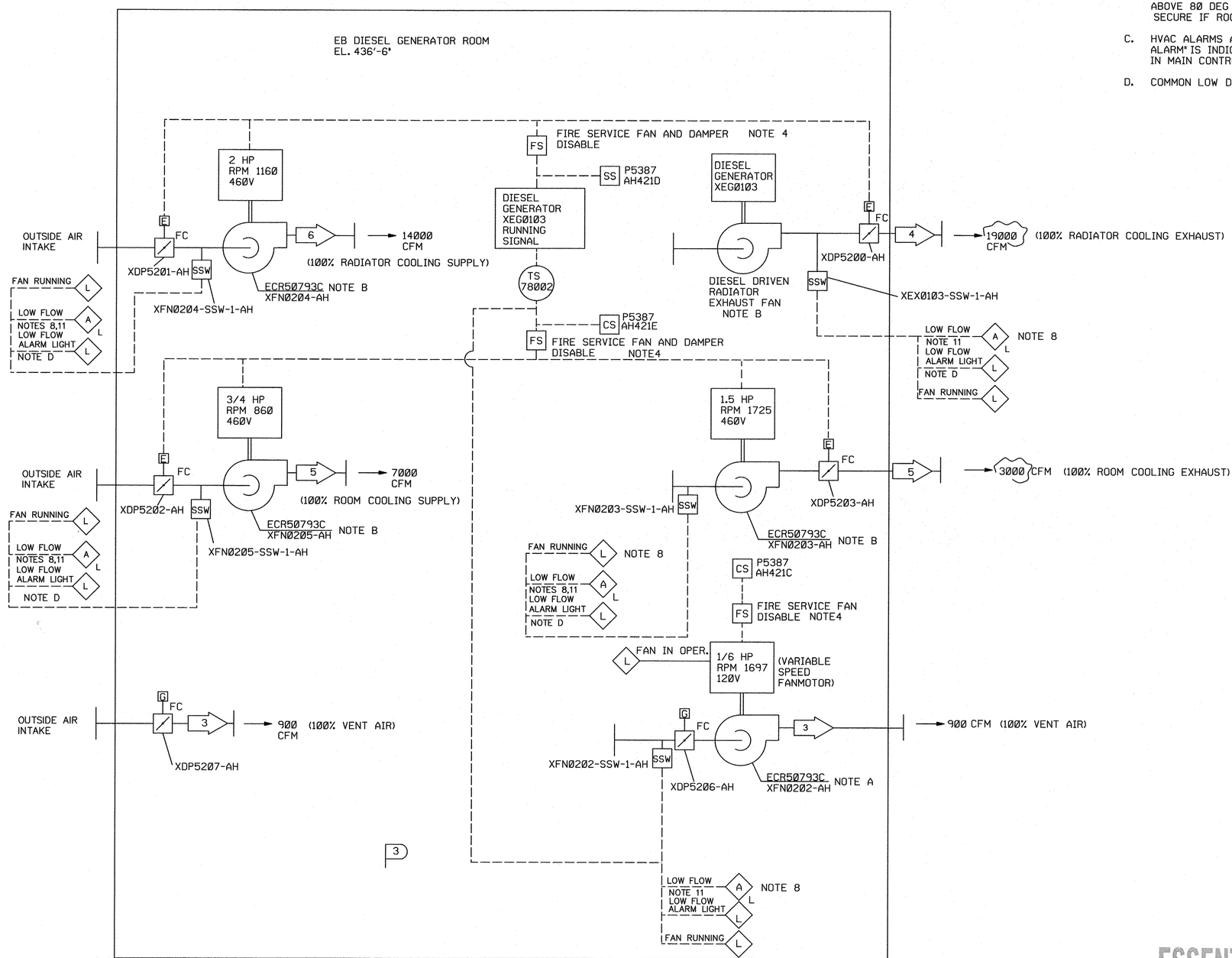

GENERAL NOTES (1-11): SEE SHEET 1

ESSENTIAL

ALL SYSTEM COMPONENTS ARE NON-NUCLEAR SAFETY RELATED

DRAWING CLASS LEGIBILITY 1

SYSTEM DESIGN DATA NOTE 10

#	AREA AIR FLOW CFM	AREA AIR TEMP.• F	AREA EMERGENCY• AIR TEMP. •F
3	900/21,900	19/120	19/120

•EMERGENCY CONDITION EXISTS WHEN NORMAL POWER IS LOST AND DG IS PROVIDING POWER

1/4"=1'-0" 0' 5' 10' 15' 20'

NO.	DATE	BY	REVISION	CKD. BY	LE APPROVAL
1	4/28/15	JTS	REVISED PER ECR-50793C	MGR	RS
0	2/3/15	JMR	ISSUED PER ECR-50793	MGR	RS

FSAR Figure 9.4-35 SH. 2

SOUTH CAROLINA ELECTRIC & GAS COMPANY

VIRGIL C. SUMMER NUCLEAR STATION

BUILDING SERVICE SYSTEM FLOW DIAGRAM

EB HVAC DG1 ROOM

DESIGN ENGINEERING

V. C. SUMMER NUCLEAR STATION JENKINSVILLE S. C.

MADE	CHECKED	LE APPROVAL
1. JMR	2. MGR	3. RS

SCALE NO SCALE | DRAWING NUMBER D-912-192 | SHT. NUMBER 2 | REV 1