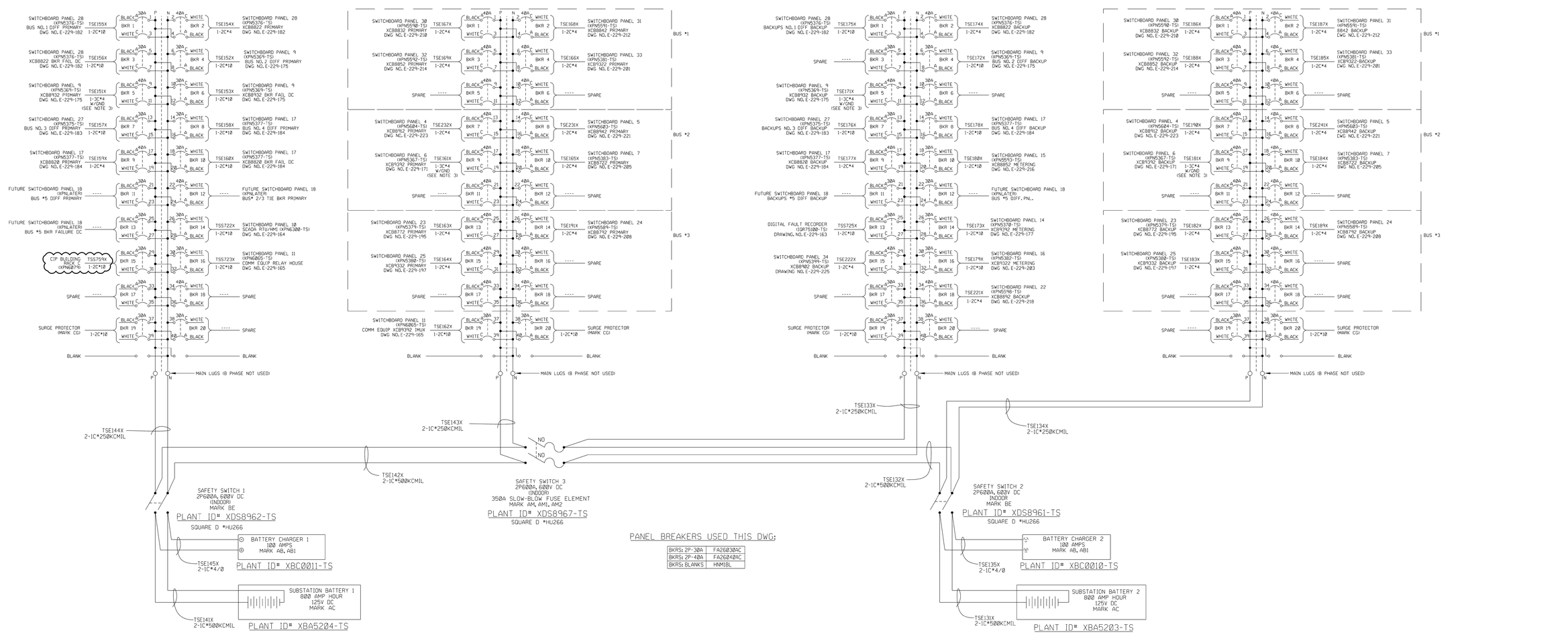

DC DISTRIBUTION PANELBOARD NO.1
LOAD SCHEDULE

CIRCUIT DESCRIPTION	(+) P	(-) N		CIRCUIT DESCRIPTION
SWITCHBOARD PANEL 28 (XPN5376-TS) BUS NO.1 DIFFERENTIAL PRIMARY	5.5		BKR 1	BKR 2	14.4	SWITCHBOARD PANEL 28 (XPN5376-TS) XCB8822 PRIMARY
SWITCHBOARD PANEL 28 (XPN5376-TS) BUS NO.1 XCB8822 BREAKER FAILURE DC	0.2		BKR 3	BKR 4	5.5	SWITCHBOARD PANEL 9 (XPN5369-TS) BUS NO.2 DIFF PRIMARY
SWITCHBOARD PANEL 9 (XPN5369-TS) XCB8932 PRIMARY	14.4		BKR 5	BKR 6	0.2	SWITCHBOARD PANEL 9 (XPN5369-TS) XCB8932 BREAKER FAILURE DC
SWITCHBOARD PANEL 27 (XPN5375-TS) BUS NO.3 DIFFERENTIAL PRIMARY	5.5		BKR 7	BKR 8	5.5	SWITCHBOARD PANEL 17 (XPN5377-TS) BUS NO.4 DIFFERENTIAL PRIMARY
SWITCHBOARD PANEL 17 (XPN5377-TS) XCB8820 PRIMARY	14.4		BKR 9	BKR 10	0.2	SWITCHBOARD PANEL 17 (XPN5377-TS) XCB8820 BKR FAIL DC
FUTURE SWITCHBOARD PANEL 18 (XPNLATER) BUS *5 DIFF PRIMARY	5.5		BKR 11	BKR 12	14.4	FUTURE SWITCHBOARD PANEL 18 (XPNLATER) BUS* 2/3 TIE BKR PRIMARY
FUTURE SWITCHBOARD PANEL 18 (XPNLATER) BUS *5 BKR FAILURE DC	0.2		BKR 13	BKR 14	1.5	SWITCHBOARD PANEL 10 SCADA RTU/HMI (XPN6300-TS) DWG NO.E-229-164
CIP BUILDING RACK C (XPN6876)	3.4		BKR 15	BKR 16	6.6	SWITCHBOARD PANEL 11 (XPN6065-TS) COMM EQUIP RELAY HOUSE DWG NO.E-229-165
SPARE			BKR 17	BKR 18		SPARE
SURGE PROTECTOR (MARK CG)			BKR 19	BKR 20		SPARE
BLANK						BLANK
TOTALS	49.1	0.0		48.3	0.0	

TOTAL:97.4

DC DISTRIBUTION PANELBOARD NO.2
LOAD SCHEDULE

CIRCUIT DESCRIPTION	(+) P	(-) N		CIRCUIT DESCRIPTION
SWITCHBOARD PANEL 30 (XPN5590-TS) XCB8832 PRIMARY	14.1		BKR 1	BKR 2	14.5	SWITCHBOARD PANEL 31 (XPN5591-TS) XCB8842 PRIMARY
SWITCHBOARD PANEL 32 (XPN5592-TS) XCB8852 PRIMARY	14.5		BKR 3	BKR 4	14.5	SWITCHBOARD PANEL 33 (XPN5381-TS) XCB9322 PRIMARY
SPARE			BKR 5	BKR 6		SPARE
SWITCHBOARD PANEL 4 (XPN5604-TS) XCB8912 PRIMARY	14.1		BKR 7	BKR 8	14.1	SWITCHBOARD PANEL 5 (XPN5603-TS) XCB8942 PRIMARY
SWITCHBOARD PANEL 6 (XPN5367-TS) XCB9392 PRIMARY	14.5		BKR 9	BKR 10	14.1	SWITCHBOARD PANEL 7 (XPN5383-TS) XCB8722 PRIMARY
SPARE			BKR 11	BKR 12		SPARE
SWITCHBOARD PANEL 23 (XPN5379-TS) XCB8772 PRIMARY	14.1		BKR 13	BKR 14	14.5	SWITCHBOARD PANEL 24 (XPN5589-TS) XCB8792 PRIMARY
SWITCHBOARD PANEL 25 (XPN5388-TS) XCB9332 PRIMARY	14.5		BKR 15	BKR 16		SPARE
SPARE			BKR 17	BKR 18		SPARE
SWITCHBOARD PANEL 11 (XPN6065-TS) XCB9392 IMUX	*		BKR 19	BKR 20		SURGE PROTECTOR (MARK CG)
BLANK						BLANK
TOTALS	85.8	0.0		71.7	0.0	

* PART OF COMMUNICATIONS 6.6 AMPS

TOTAL:157.5

DC DISTRIBUTION PANELBOARD NO.3
LOAD SCHEDULE

CIRCUIT DESCRIPTION	(+) P	(-) N		CIRCUIT DESCRIPTION
SWITCHBOARD PANEL 28 (XPN5376-TS) BUS NO.1 DIFFERENTIAL BACKUP	5.5		BKR 1	BKR 2	14.4	SWITCHBOARD PANEL 28 (XPN5376-TS) XCB8822 BACKUP
SPARE			BKR 3	BKR 4	5.5	SWITCHBOARD PANEL 9 (XPN5369-TS) BUS NO.2 DIFFERENTIAL BACKUP
SWITCHBOARD PANEL 9 (XPN5369-TS) XCB8932 BACKUP	14.4		BKR 5	BKR 6		SPARE
SWITCHBOARD PANEL 27 (XPN5375-TS) BUS NO.3 DIFFERENTIAL BACKUP	5.5		BKR 7	BKR 8	5.5	SWITCHBOARD PANEL 17 (XPN5377-TS) BUS NO.4 DIFFERENTIAL BACKUP
SWITCHBOARD PANEL 17 (XPN5377-TS) XCB8820 BACKUP	14.4		BKR 9	BKR 10	0.24	SWITCHBOARD PANEL 15 (XPN5993-TS) XCB8852 METERING
FUTURE SWITCHBOARD PANEL 18 BUS 5 DIFFERENTIAL BACKUP	5.5		BKR 11	BKR 12	14.4	FUTURE SWITCHBOARD PANEL 18 (XPNLATER) BUS *5 DIFF.PNL.
DIGITAL FAULT RECORDER (IGR75100-TS) DRAWING NO.E-229-163	2.5		BKR 13	BKR 14	0.24	SWITCHBOARD PANEL 14 (XPN5370-TS) XCB9392 METERING
SWITCHBOARD PANEL 34 (XPN5399-TS) XCB8902 BACKUP DRAWING NO.E-229-225	14.1		BKR 15	BKR 16	0.24	SWITCHBOARD PANEL 16 (XPN5382-TS) XCB9332 METERING
SPARE			BKR 17	BKR 18	14.1	SWITCHBOARD PANEL 22 (XPN5598-TS) XCB8892 BACKUP
SURGE PROTECTOR (MARK CG)			BKR 19	BKR 20		SPARE
BLANK						BLANK
TOTALS	61.9	0.0		54.62	0.0	

TOTAL:116.52

DC DISTRIBUTION PANELBOARD NO.4
LOAD SCHEDULE

CIRCUIT DESCRIPTION	(+) P	(-) N		CIRCUIT DESCRIPTION
SWITCHBOARD PANEL 30 (XPN5590-TS) XCB8832 BACKUP	14.1		BKR 1	BKR 2	14.0	SWITCHBOARD PANEL 31 (XPN5591-TS) XCB8842 BACKUP
SWITCHBOARD PANEL 32 (XPN5592-TS) XCB8852 BACKUP	14.0		BKR 3	BKR 4	14.0	SWITCHBOARD PANEL 33 (XPN5381-TS) XCB9322 BACKUP
SPARE			BKR 5	BKR 6		SPARE
SWITCHBOARD PANEL 4 (XPN5604-TS) XCB8912 BACKUP	18.7		BKR 7	BKR 8	18.7	SWITCHBOARD PANEL 5 (XPN5603-TS) XCB8942 BACKUP
SWITCHBOARD PANEL 6 (XPN5367-TS) XCB9392 BACKUP	14.0		BKR 9	BKR 10	14.1	SWITCHBOARD PANEL 7 (XPN5383-TS) XCB8722 BACKUP
SPARE			BKR 11	BKR 12		SPARE
SWITCHBOARD PANEL 23 (XPN5379-TS) XCB8772 BACKUP	14.1		BKR 13	BKR 14	14.0	SWITCHBOARD PANEL 24 (XPN5589-TS) XCB8792 BACKUP
SWITCHBOARD PANEL 25 (XPN5388-TS) XCB9332 BACKUP	14.0		BKR 15	BKR 16		SPARE
SPARE			BKR 17	BKR 18		SPARE
SPARE			BKR 19	BKR 20		SURGE PROTECTOR (MARK CG)
BLANK						BLANK
TOTALS	88.9	0.0		74.8	0.0	

TOTAL:163.7

NOTES

1. TWO OUTSIDE POLES ARE USED TO SWITCH DC.
2. FOR REFERENCES AND EQUIPMENT LOCATIONS SEE DRAWING E-229-150.
3. TAPE AND ISOLATE BARE GROUND WIRE WHERE INDICATED.
4. FOR BATTERY CONNECTIONS SEE DRAWING E-229-156.

INFORMATION ONLY
THIS ENTIRE DRAWING HAS BEEN REDRAWN ON REVISION 1
IN ITS ENTIRETY TO REFLECT PANEL AND BUS RECONFIGURATION

NO.	DATE	BY	REVISION	CKD. BY	LE APPROVAL
6	8/27/2019	NAX	REVISED PER ECR-50882	MIA	JPW
5	10/5/2016	AYF	REVISED PER ECR-50836	AMR	AB
4	3/22/2016	VMK	REVISED PER ECR-50855B	AMR	AB
3	12/9/2015	VMK	REVISED PER ECR-50864	AMR	NE
2	2/12/2015	VMK	REV PER ECR50804, 50806, 50832, 50834	AMR	NE
1	10/07/2014	DDJ	REV PER ECR50803, ECR50777, ECR50772	MGR	NE
0	9/19/2014	DDJ	ISSUED PER ECR50748A	MGR	NE

DRAWING LEGIBILITY CLASS 2
SCE&G CAD ENHANCED

FSAR Figure 8.3-5a

SOUTH CAROLINA ELECTRIC & GAS COMPANY

VIRGIL C. SUMMER NUCLEAR STATION

ELECTRICAL

230 KV SUBSTATION UNIT 1 RELAY HOUSE

DC ONE LINE DIAGRAM AND PANEL SCHEDULES

DESIGN ENGINEERING

V. C. SUMMER NUCLEAR STATION JENKINSVILLE, S. C.

MADE	CHECKED	LE APPROVAL
1. DDJ	2. MGR	3. NE

SCALE NO SCALE | E-229-152 (DRAWING NUMBER) | 6 (SHT. NUMBER / REV.)

1/4"=1'-0" 0' 5' 10' 15' 20'

PLAN "SAFETY" INTO EVERY JOB

230KV SUBSTA DC PANELBORDS