TABLE OF CONTENTS

Section	Title	Page	
11.0	RADIOACTIVE WASTE MANAGEMENT	11.1-1	
11.1	SOURCE TERMS	11.1-1	
11.1.1	RADIOACTIVITIES IN SYSTEMS AND COMPONENTS, CONSERVATIVE MODEL	11.1-1	
11.1.1.1	Reactor Coolant Activity	11.1-1	
11.1.1.2	Gaseous Waste Processing System Activity	11.1-3	
11.1.1.3	Volume Control Tank Activity	11.1-4	
11.1.1.4	Pressurizer Activity	11.1-4	
11.1.1.5	Liquid Waste Processing System Activity	11.1-4	
11.1.1.6	Solid Waste	11.1-4	
11.1.2	LEAKAGE RATES	11.1-4	
11.1.3	RADIOACTIVITIES IN THE FLUID SYSTEMS, REALISTIC MODEL	11.1-5	
11.1.4	TRITIUM	11.1-5	
11.1.4.1	System Sources	11.1-5	
11.1.4.2	Design Bases	11.1-6	
11.1.4.3	Design Evaluation	11.1-7	
11.1.5	REFERENCES	11.1-7	
11.2	LIQUID WASTE SYSTEMS	11.2-1	
11.2.1	DESIGN OBJECTIVES	11.2-1	
11.2.2	SYSTEMS DESCRIPTIONS	11.2-1	
11.2.2.1	Waste Holdup Tank	11.2-2	
11.2.2.2	Floor Drain Tank	11.2-3	
11.2.2.3	Laundry and Hot Shower Tank	11.2-3	RN 03-038
11.2.2.4	Excess Liquid Waste Processing System (ELWS)	11.2-3	
11.2.2.5	Laboratory Drain System	11.2-4	
11.2.2.6	Waste from Spent Resin	11.2-4	
11.2.3	SYSTEM DESIGN	11.2-4	
11.2.3.1	Component Design	11.2-4	
11.2.3.2	Instrumentation Design	11.2-11	
11.2.3.3	Tank Overflow Protection	11.2-11	
11.2.4	OPERATING PROCEDURES	11.2-11	
11.2.4.1	Normal Operation	11.2-12	
11.2.4.2	Faults of Moderate Frequency	11.2-15	
11.2.5	PERFORMANCE TESTS	11.2-16	
11.2.6	ESTIMATED RELEASES	11.2-16	
11.2.6.1	Reactor Grade Demineralizers	11.2-16	RN 03-038
11.2.6.2	Liquid Waste Processing System	11.2-17	
11.2.6.3	Detergent Wastes	11.2-18	
11.2.6.4	Secondary System	11.2-18	
11.2.6.5	Adjustments to Liquid Radwaste Source Term for Anticipated Operational Occurrences	11.2-19	
11.2.6.6	Criteria for Reuse, Discharge and Recycle	11.2-20	
11.2.7	RELEASE POINTS	11.2-20	
11.2.8	DILUTION FACTORS	11.2-21	
11.2.9	ESTIMATED DOSES	11.2-22	
11.2.10	REFERENCES	11.2.23	

TABLE OF CONTENTS (Continued)

Section	Title	Page
11.3	GASEOUS WASTE SYSTEM	11.3-1
11.3.1	DESIGN OBJECTIVES	11.3-1
11.3.2	SYSTEM DESCRIPTION	11.3-1
11.3.3	SYSTEM DESIGN	11.3-3
11.3.3.1	Component Design	11.3-3
11.3.3.2	Instrumentation and Control Design	11.3-4
11.3.4	OPERATING PROCEDURES	11.3-6
11.3.4.1	General Description	11.3-6
11.3.4.2	Startup Operation	11.3-6
11.3.4.3	Normal Operations	11.3-7
11.3.4.4	Shutdown	11.3-7
11.3.5	PERFORMANCE TESTS	11.3-7
11.3.6	ESTIMATED RELEASES	11.3-8
11.3.6.1	Gaseous Waste Processing System	11.3-8
11.3.6.2	Reactor Building Purge	11.3-8
11.3.6.3	Auxiliary Building Ventilation	11.3-9
11.3.6.4	Secondary System	11.3-9
11.3.6.5	Release Criteria	11.3-10
11.3.7	RELEASE POINTS	11.3-10
11.3.8	DILUTION FACTORS	11.3-10
11.3.9	ESTIMATED DOSES	11.3-11
11.3.10	REFERENCES	11.3-13
11.4	PROCESS AND EFFLUENT RADIOLOGICAL MONITORING SYSTEMS	11.4-1
11.4.1	DESIGN OBJECTIVES	11.4-1
11.4.2	CONTINUOUS MONITORING	11.4-2
11.4.3	SAMPLING	11.4-10
11.4.4	INSERVICE INSPECTION, CALIBRATION AND MAINTENANCE	11.4-12
11.4.5	REFERENCES	11.4-13
11.5	SOLID WASTE SYSTEM	11.5-1
11.5.1	DESIGN OBJECTIVES	11.5-1
11.5.2	SYSTEM INPUTS	11.5-1
11.5.3	EQUIPMENT DESCRIPTION	11.5-2
11.5.3.1	Processing	11.5-2
11.5.3.2	Equipment	11.5-2
11.5.4	EXPECTED VOLUMES	11.5-6
11.5.4.1	Activity Levels	11.5-6
11.5.4.2	Processed Wastes	11.5-7
11.5.4.3	Filter Cartridges	11.5-7
11.5.4.4	Miscellaneous Solid Wastes	11.5-7

TABLE OF CONTENTS (Continued)

Section	Title	Page	
11.5.5	PACKAGING	11.5-7	RN 08-003
11.5.5.1	Evaporator Bottoms and Chemical Samples **-No Longer In Service-**	11.5-7	
11.5.5.2	Spent Resin	11.5-7	
11.5.5.3	Filter Disposal	11.5-9	
11.5.5.4	Radioactive Hardware	11.5-10	
11.5.5.5	Compacted Wastes	11.5-10	
11.5.6	STORAGE	11.5-10	
11.5.7	SHIPMENT	11.5.11	
11.5.8	POTENTIAL FOR RELEASES	11.5-11	
11.5.8.1	Potential for Release during Container Filling	11.5-11	
11.5.8.2	Potential for Release from Storage Tanks	11.5-12	
11.6	OFFSITE RADIOLOGICAL MONITORING PROGRAM	11.6-1	
11.7	Deleted by RN 12-005		RN 12-005

LIST OF TABLES

Table	Title	Page	
11.1-1	Parameters used in the Calculation of Reactor Coolant Fission and Corrosion Product Activities	11.1-8	
11.1-2	Reactor Coolant Equilibrium Fission and Corrosion Product Activities	11.1-11	
11.1-3	Volume Control Tank Equilibrium Activities	11.1-12	
11.1-4	Pressurizer Activities	11.1-13	02-01
11.1-5	Normal Plant Operation Source Terms	11.1-14	99-01
11.1-6	Parameters used to Describe the Reactor System - Realistic Model	11.1-17	
11.1-7	Tritium Production	11.1-18	
11.2-1	Isotopic Values in the Liquid Waste Processing System	11.2-24	RN 03-038
11.2-2	Equipment Principal Design Parameters	11.2-28	
11.2-3	Liquid Waste Processing System Major Component Inventories	11.2-39	
11.2-4	Range of Measured Demineralizer Decontamination Factors for Selected Isotopes	11.2-42	
11.2-5	Liquid Waste Processing System Instrumentation Principal Design Parameters	11.2-43	
11.2-6	Tank Overflow Protection	11.2-49	
11.2-6a	Comparison of Tanks Outside Containment With Provisions of Branch Technical Position ETSB 11-1 (Rev. 1), Paragraph B.1.b	11.2-51	
11.2-7	Parameters Used in the Calculation of Estimated Activity in Liquid Wastes	11.2-54	
11.2-8	PWR-GALE Code Input Parameters Used in Calculating Releases of Radioactive Materials in Liquid Effluents	11.2-55	02-01
11.2-9	Deleted by RN 03-038		RN 03-038
11.2-10	Deleted by RN 03-038		
11.2-11	Deleted by RN 03-038		
11.2-12	Liquid Effluents Annual Releases	11.2-57	
11.2-13	Comparison of Radionuclide Concentrations in Liquid Effluents to the Limits of 10 CFR 20	11.2-58	
11.2-14	Summary of Calculated Liquid Pathway Doses Virgil C. Summer Nuclear Station	11.2-59	
11.2-15	Appendix I Conformance Summary Table Virgil C. Summer Nuclear Station Liquid Effluents	11.2-60	

LIST OF TABLES (Continued)

Table	Title	Page	
11.3-1	Design Basis Accumulated Radioactivity per Unit in the Gaseous Waste Processing System after Forty Years Operation	11.3-14	
11.3-2	Expected Accumulated Radioactivity per Unit in the Gaseous Waste Processing System after Forty Years Operation	11.3-15	
11.3-3	Reduction in Reactor Coolant System Gaseous Fission Products Resulting from Normal Operation of the Gaseous Waste Processing System	11.3-16	
11.3-4	Process Parameters for Gaseous Waste Processing System	11.3-17	
11.3-5	Gaseous Waste Processing System Component Data	11.3-21	
11.3-6	Gaseous Waste Processing System Instrumentation Design Parameters	11.3-22	
11.3-7	PWR-GALE Code Input Parameters Used In Calculating Releases of Radioactive Materials in Gaseous Effluents	11.3-25	02-01
11.3-8	Calculated Releases of Radioactive Materials in Gaseous Effluents from the Plant	11.3-26	
11.3-9	Stack Release Information	11.3-27	
11.3-9a	Comparison of Normal Ventilation Exhaust System Air Filtration and Adsorption Units With Branch Technical Position ESTB 11-2.	11.3-30	
11.3-10	Comparison of Radionuclide Concentrations in Gaseous Effluents to the Limits of 10 CFR 20	11.3-35	
11.3-11	Summary of Calculated Gaseous Pathway Doses Virgil C. Summer Nuclear Station	11.3-36	
11.3-12	Appendix I Conformance Summary Table Virgil C. Summer Nuclear Station Gaseous Effluents	11.3-37	
11.4-1	Process and Effluent Radiological Monitors	11.4-14	
11.4-2	Discharge Monitoring and Analysis	11.4-17	
11.5-1	Spent Resin Volumes	11.5-13	
11.5-2	Anticipated Total Solid Waste Generated per Year	11.5-14	
11.5-3	Maximum Expected Concentrations of Waste to be Packaged	11.5-15	
11.5-4	Maximum Expected Activities of Expended Filter Cartridge	11.5-16	
11.5-5	Solid Waste System Equipment Design Parameters	11.5-17	
11.5-6	Solid Radioactive Waste Processed from Westinghouse Designed Operating Reactors	11.5-18	
11.5-7	Valves (GAI); Valves (Westinghouse); Equipment; Piping (GAI); Piping (Westinghouse)	11.5-19	

LIST OF FIGURES

Figure No.	Title	
11.2-1	Liquid Waste Processing System Process Flow Diagram	
11.2-2	Deleted by RN 03-038	RN 03-038
11.2-3	Location of Liquid Release Points	
11.2-4	Fairfield Pumped Storage Facility	
11.2-5	Duratek System Typical Lineup	RN 03-038
11.3-1	Gaseous Waste Processing System Fission Gas Accumulation Based on Continuous Core Operation at 2958 MWt with 1% Fuel Defects and 60 gpm Continuous Letdown	RN 02-025
11.3-2	Estimated Gaseous Waste Processing System Fission Gas Accumulation Based on Table 11.1-5 and Full Power Operation at 2958 MWt and 60 gpm Continuous Letdown	
11.3-3	Gaseous Waste Processing System Process Flow Diagram	
11.3-4	Piping System Flow Diagram - Waste Processing (3 Sheets)	
11.3-5	Waste Gas Compressor Package	
11.3-6	Catalytic Hydrogen Recombiner Package	
11.3-7	Gaseous Waste Release Points	
11.3-8	Potentially Radioactive Gaseous Waste Release Points	
11.4-1	Radiation Monitoring System Interlocks	
11.4-2	Location of High Range Effluent Monitors RM-A13 and RM-A14	
11.5-1	Deleted by RN 08-003	RN 08-003

LIST OF EFFECTIVE PAGES (LEP)

The following list delineates pages to Chapter 11 of the Virgil C. Summer Nuclear Station Final Safety Analysis Report which are current through January 2019. The latest changes to pages and figures are indicated below by Revision Number (RN) in the Amendment column along with the Revision Number and date for each page and figure included in the Final Safety Analysis Report.

Page/Fig. No.		Amend. No.	Date
Page	11-i	Reset	January 2019
	11-ii	Reset	January 2019
	11-iii	Reset	January 2019
	11-iv	Reset	January 2019
	11-v	Reset	January 2019
	11-vi	Reset	January 2019
	11-vii	Reset	January 2019
	11-viii	Reset	January 2019
	11-ix	Reset	January 2019
Page	11.1-1	99-01	June 1999
	11.1-2	99-01	June 1999
	11.1-3	99-01	June 1999
	11.1-4	99-01	June 1999
	11.1-5	99-01	June 1999
	11.1-6	99-01	June 1999
	11.1-7	99-01	June 1999
	11.1-8	99-01	June 1999
	11.1-9	99-01	June 1999
	11.1-10	99-01	June 1999
	11.1-11	99-01	June 1999
	11.1-12	99-01	June 1999
	11.1-13	99-01	June 1999
	11.1-14	99-01	June 1999
	11.1-15	99-01	June 1999
	11.1-16	99-01	June 1999
	11.1-17	99-01	June 1999
	11.1-18	99-01	June 1999
Page	11.2-1	RN03-038	November 2011
	11.2-2	RN03-038	November 2011
	11.2-3	RN03-038	November 2011
	11.2-4	RN03-038	November 2011
	11.2-5	RN03-038	November 2011
	11.2-6	RN03-038	November 2011

Page/Fig.No.		Amend. No.	Date
Page	11.2-7	RN03-038 RN14-043	November 2011 July 2016
	11.2-8	RN03-038	November 2011
	11.2-9	RN03-038	November 2011
	11.2-10	RN03-038	November 2011
	11.2-11	RN03-038	November 2011
	11.2-12	RN03-038	November 2011
	11.2-13	RN03-038	November 2011
	11.2-14	RN03-038	November 2011
	11.2-15	RN03-038	November 2011
	11.2-16	RN03-038	November 2011
	11.2-17	RN03-038	November 2011
	11.2-18	RN03-038	November 2011
	11.2-19	RN03-038	November 2011
	11.2-20	RN03-038	November 2011
	11.2-21	RN03-038	November 2011
	11.2-22	RN03-038	November 2011
	11.2-23	RN03-038	November 2011
	11.2-24	RN03-038	November 2011
	11.2-25	RN03-038	November 2011
	11.2-26	RN03-038	November 2011
	11.2-27	RN03-038	November 2011
	11.2-28	RN03-038	November 2011
	11.2-29	02-01	May 2002
	11.2-30	02-01	May 2002
	11.2-31	02-01	May 2002
	11.2-32	97-01	August 1997
	11.2-33	RN03-038	November 2011
	11.2-34	RN03-038	November 2011
	11.2-35	RN03-038	November 2011
	11.2-36	RN03-038	November 2011
	11.2-37	97-01	August 1997
	11.2-38	RN03-038	November 2011

LIST OF EFFECTIVE PAGES (LEP)

Page/Fig.No.		Amend. No.	Date
	11.2-39	RN03-038	November 2011
Page	11.2-40	RN03-038	November 2011
	11.2-41	RN03-038	November 2011
	11.2-42	02-01	May 2002
	11.2-43	02-01	May 2002
	11.2-44	RN03-038	November 2011
	11.2-45	02-01	May 2002
	11.2-46	02-01	May 2002
	11.2-47	RN04-037	October 2005
	11.2-48	02-01	May 2002
	11.2-49	RN03-038	November 2011
	11.2-50	RN03-038	November 2011
	11.2-51	02-01	May 2002
	11.2-52	02-01	May 2002
	11.2-53	02-01	May 2002
	11.2-54	RN03-038	November 2011
	11.2-55	RN03-038	November 2011
	11.2-56	RN03-038	November 2011
	11.2-57	RN03-038	November 2011
	11.2-58	RN03-038	November 2011
	11.2-59	RN03-038	November 2011
	11.2-60	RN03-038	November 2011
Fig.	11.2-1	RN03-038	November 2011
	11.2-2 (Sh. 1)	deleted	November 2011
	11.2-2 (Sh. 2)	deleted	November 2011
	11.2-2 (Sh. 3)	deleted	November 2011
	11.2-2 (Sh. 4)	deleted	November 2011
	11.2-2 (Sh. 5)	deleted	November 2011
	11.2-3	0	August 1984
	11.2-4	0	August 1984
	11.2-5	RN03-038	November 2011
Page	11.3-1	00-01	December 2000
	11.3-2	RN02-025	July 2002
	11.3-3	00-01	December 2000
	11.3-4	00-01	December 2000
	11.3-5	02-01	May 2002

Page/Fig.No.		Amend. No.	Date
	11.3-6	02-01	May 2002
Page	11.3-7	RN03-023	March 2004
	11.3-8	RN02-028	July 2002
	11.3-9	RN02-028	July 2002
	11.3-10	RN02-028	July 2002
	11.3-11	RN02-028	July 2002
	11.3-12	00-01	December 2000
	11.3-13	00-01	December 2000
	11.3-14	RN02-025	July 2002
	11.3-15	RN02-025	July 2002
	11.3-16	RN02-025	July 2002
	11.3-17	02-01	May 2002
	11.3-18	02-01	May 2002
	11.3-19	02-01	May 2002
	11.3-20	02-01	May 2002
	11.3-21	02-01	May 2002
	11.3-22	RN07-010	May 2007
	11.3-23	02-01	May 2002
	11.3-24	02-01	May 2002
	11.3-25	RN02-028	July 2002
	11.3-26	02-01	May 2002
	11.3-27	02-01	May 2002
	11.3-28	02-01	May 2002
	11.3-29	02-01	May 2002
	11.3-30	02-01	May 2002
	11.3-31	02-01	May 2002
	11.3-32	02-01	May 2002
	11.3-33	02-01	May 2002
	11.3-34	RN02-034	May 2003
	11.3-35	RN02-028	July 2002
	11.3-36	02-01	May 2002
	11.3-37	02-01	May 2002
	11.3-38	02-01	May 2002
Fig.	11.3-1	RN02-025	July 2002
	11.3-2	RN02-025	July 2002
	11.3-3	0	August 1984

LIST OF EFFECTIVE PAGES (LEP)

Page/Fig.No.		Amend. No.	Date
	11.3-4 (Sh. 1)	RN04-020	February 2005
		RN18-052	January 2019
Fig.	11.3-4 (Sh. 2)	RN05-041	October 2005
	11.3-4 (Sh. 3)	RN09-011	May 2009
		RN18-026	October 2018
	11.3-5	0	August 1984
	11.3-6	0	August 1984
	11.3-7	0	August 1984
	11.3-8	0	August 1984
Page	11.4-1	02-01	May 2002
	11.4-2	RN07-037	November 2011
	11.4-3	02-01	May 2002
	11.4-4	02-01	May 2002
	11.4-5	RN07-037	November 2011
	11.4-6	RN03-011	April 2006
	11.4-7	RN02-019	June 2003
	11.4-8	RN03-011	April 2006
	11.4-9	RN03-011	April 2006
	11.4-10	02-01	May 2002
	11.4-11	02-01	May 2002
	11.4-12	02-01	May 2002
	11.4-13	02-01	May 2002
	11.4-14	RN07-037	November 2011
	11.4-15	02-01	May 2002
	11.4-16	RN03-011	April 2006
	11.4-17	02-01	May 2002
	11.4-18	02-01	May 2002
Fig.	11.4-1	RN07-037	November 2011
	11.4-2	0	August 1984
Page	11.5-1	RN08-003	January 2011
	11.5-2	RN08-003	January 2011
	11.5-3	RN08-003	January 2011
	11.5-4	RN08-003	January 2011
	11.5-5	RN08-003	January 2011
	11.5-6	RN08-003	January 2011
	11.5-7	RN08-003	January 2011
	11.5-8	RN08-003	January 2011
	11.5-9	RN08-003	January 2011
	11.5-10	RN08-003	October 2010
		RN10-022	November 2011
Page	11.5-11	RN08-003	January 2011
	11.5-12	02-01	May 2002
	11.5-13	RN08-003	January 2011
	11.5-14	RN08-003	January 2011
	11.5-15	RN08-003	January 2011
	11.5-16	RN08-003	January 2011
	11.5-17	RN08-003	January 2011
	11.5-18	RN08-003	January 2011
	11.5-19	RN08-003	January 2011
	11.5-20	RN08-003	January 2011
Fig.	11.5-1	Deleted	January 2011
Page	11.6-1	97-01	August 1997

11.0 RADIOACTIVE WASTE MANAGEMENT

11.1 SOURCE TERMS

The fission product inventory in the reactor core and the diffusion to the fuel pellet/cladding gap are presented in Chapter 15. Source terms and models used in the evaluation of radwaste treatment systems and effluent releases are based on operating plant data where available[1].

Two (2) source terms are presented. The first is a conservative model which utilizes a conventional fuel clad defect model. This conservative model serves as a basis for calculations of the maximum offsite doses resulting from postulated accidents.

The second source term is a realistic model used to predict expected long term average concentrations of radionuclides and expected releases. This realistic model is based on ANSI/ANS-18.1-1984. 99-01

11.1.1 RADIOACTIVITIES IN SYSTEMS AND COMPONENTS, CONSERVATIVE MODEL

11.1.1.1 Reactor Coolant Activity

The parameters used in the calculation of the reactor coolant fission product inventories together with the pertinent information concerning the expected coolant cleanup flowrate and demineralizer effectiveness, are summarized in Table 11.1-1. Calculated reactor coolant radionuclide concentrations, based on the assumptions of Table 11.1-1, are presented in Table 11.1-2. In these calculations the defective fuel rods are assumed to be present at the initial core loading and to be uniformly distributed throughout the core; thus, the fission product escape rate coefficients are based upon average fuel temperature.

For fuel failure and burnup experience see Chapter 4.

The fission product activities in the reactor coolant during operation with small cladding defects (fuel rods containing pinholes or fine cracks) are computed using the following differential equations:

For parent nuclides in the coolant:

$$\frac{dN_{c_i}}{dt} = \frac{R_i N_{F_i}}{M_C} - \left[\lambda_i + D_i + \frac{Q_L}{M_C}\left(\frac{\psi_i + DF_i - 1}{DF_i}\right)\right] N_{c_i} \qquad (11.1\text{-}1)$$ 99-01

For daughter nuclides in the coolant:

$$\frac{dN_{c_j}}{dt} = \frac{R_j N_{F_j}}{M_C} + f_i \lambda_i N_{c_i} - \left[\lambda_j + D_j + \frac{Q_L}{M_C} \left(\frac{\psi_j + DF_j - 1}{DF_j} \right) \right] N_{c_j} \qquad (11.1\text{-}2\ )$$ 99-01

Where:

N_C = Concentration of nuclide in the reactor coolant (atoms/gram)
N_F = Inventory of nuclide in the fuel (atoms)
t = Operating time(seconds)
R = Nuclide release coefficient (1/sec) = F v
F = Fraction of fuel rods with defective cladding
v = Fission product escape rate coefficient (1/sec)
M_C = Mass of reactor coolant (grams)
λ = Nuclide decay constant (1/sec)
DF = Nuclide demineralizer decontamination factor
Q_L = Purification or letdown mass flow rate (grams/sec)
ψ = Nuclide volume control tank stripping fraction
f = Fraction of parent nuclide decay events that result in the formation of the daughter nuclide
D = Dilution coefficient for feed and bleed (1/sec) =

$$\frac{\beta}{B_O - \beta t} * \frac{1}{DF}$$ 99-01

B_O = Initial boron concentration (ppm)
β = Boron concentration reduction rate (ppm/sec)

and where

subscript i refers to the parent nuclide.
subscript j refers to the daughter nuclide.

The above equations are based on the assumption that there is no activity reduction due to pressurizer operation and that the nuclide concentration in the volume control tank can be approximated by:

$$N_{VL} = \frac{1 - \psi}{DF} * N_C$$

where

N_{VL} = concentration of nuclide in the volume control tank (atoms/gram)

The corrosion product activities in the Reactor Coolant System are based on measurements at operating reactors[1]. The reactor coolant inventories of corrosion products (which are independent of fuel defect level) are given in Table 11.1-2.

Another potential source of primary coolant activity is activation products from the silver-indium-cadmium control rods. The presence of Ag-110m has been noted in the primary coolant or plant discharges at a few of the operating plants. Several mechanisms can contribute to the presence of this isotope; namely, fission product decay of the mass 109 chain followed by activation to Ag-110m, surface contamination of the control rods with absorber material, or escape of activation products from the control rods. The control rods are designed to contain products formed in the absorber material and are not expected to contribute to the coolant activity. Current information, however, is insufficient to determine the source of the silver, and thus no model is available for predicting coolant activity levels due to the above sources. Investigations of this will be continued as more data becomes available.

11.1.1.2 Gaseous Waste Processing System Activity

The stripping fractions used in determining the amount of fission gases removed from the reactor coolant in the volume control tank and collected by the Gaseous Waste Processing System (GWPS) are calculated as follows:

$$\psi = 1 - \left[\frac{KQ}{KQ + \lambda(KL + V) + P} \right] \qquad (11.1\text{-}3)$$

Where:

ψ = Nuclide volume control tank stripping fraction
K = RT / MH
R = Gas constant = 45.59 atm/cc per gram-mole /°R
T = Nominal volume control tank temperature (°R)
M = Molecular weight of water = 18.0 grams/gram-mole
H = Henry's Law constant
Q = Letdown or purification flow rate (grams/sec) 99-01
λ = Nuclide decay constant (1/sec)
L = Volume control tank liquid mass (grams)
V = Volume control tank vapor volume (cc)
P = Volume control tank purge rate to the gaseous waste processing system (cc/sec at volume control tank conditions)

An activity balance is performed on the Reactor Coolant System and volume control tank to obtain the Reactor Coolant System activity, volume control tank activity, and stripping fraction. Stripping fractions are shown in Table 11.1-1. Gaseous waste source terms are discussed in section 11.3.

11.1.1.3 Volume Control Tank Activity

Table 11.1-3 lists the maximum activities in the volume control tank using the assumptions summarized in Table 11.1-1. The liquid activity is assumed to be the same as the letdown coolant activity for the halogen and particulate activity. 99-01

11.1.1.4 Pressurizer Activity

The specific activity for major nuclides in the pressurizer are discussed below.

- Pressurizer Liquid Phase Source Strengths - The pressurizer liquid specific activity is assumed to be the same as that of the reactor coolant. Table 11.1-4 lists only those nuclides that are the major contributors to total source strength.

- Pressurizer Steam Phase - Pressurizer steam phase radiogas concentrations (Table 11.1-4) are based on the stripping of radiogases from the continuous 2-gpm pressurizer spray and the subsequent buildup of these radiogases in the steam space. The buildup time is assumed to be 480 days. Decay credit has been taken during spray line transit. The radiogases are assumed to be completely stripped from the spray, except for Kr-85 and Xe-133, which are in Henry's Law Equilibrium with the liquid in the pressurizer. 99-01

  Pressurizer steam phase iodine concentrations are obtained from the liquid phase nuclide activities and measured values of the partition coefficient for I-131. A large partition coefficient was chosen to maximize the activities. It was assumed to apply to all radioiodines.

The activities in the pressurizer are separated between the liquid and the steam phase and the results obtained are given in Table 11.1-4 using the above assumptions and those summarized in Table 11.1-1. 99-01

11.1.1.5 Liquid Waste Processing System Activity

Liquid waste source terms are discussed in Section 11.2. 99-01

11.1.1.6 Solid Waste

Solid waste source terms are discussed in Section 11.5.

11.1.2 LEAKAGE RATES

As a necessary part of the effort to reduce effluent of radioactive liquid wastes, Westinghouse has been surveying various Pressurized Water Reactor (PWR) facilities which are in operation, to identify design and operating problems influencing reactor coolant and non-reactor grade leakage and hence the load on the LWPS.

Leakage sources have been identified in connection with pump shaft seals and valve stem leakage. Where packed glands are provided, a leakage problem may be anticipated, while mechanical shaft seals provide essentially 0 leakage. Valve stem leakage was experienced where the originally specified packing was used. A combination of a graphite filament yarn packing sandwiched with asbestos sheet packing is used with improved results in several plants. A bellows seal is being utilized in later plants which eliminates all stem leakage.

In addition, seat leakage was experienced on some pressurized power operated relief valves. However, this was found to be due to a manufacturing error and has been corrected.

11.1.3 RADIOACTIVITIES IN THE FLUID SYSTEMS, REALISTIC MODEL

The parameters used to describe the Virgil C. Summer Nuclear Station reactor are given in Table 11.1-6. 99-01

Specific activities in the primary coolant, steam generator water, and steam generator steam are based on the parameters of Table 11.1-6 and are given in Table 11.1-5. 99-01

11.1.4 TRITIUM 99-01

The release of tritium to the environment from operating Westinghouse PWR's has always been well below 10 CFR 20 limits. This Section discusses the reduced tritium production in the plant as a result of employing Zircaloy clad fuel and silver-indium-cadmium control rods.

11.1.4.1 System Sources

There are 2 principal contributors to tritium production within the PWR system: the ternary fission source, and the dissolved boron in the reactor coolant. Additional contributions are made by Li^6, Li^7, and deuterium in the reactor water. Tritium production from various sources is shown in Table 11.1-7.

11.1.4.1.1 Fission Source

This tritium is formed within the fuel material and may:

1. Remain in the fuel rod uranium matrix,

2. Diffuse into the cladding and become hydrided and fixed there,

3. Diffuse through the clad for release into the primary coolant,

4. Release to the coolant through macroscopic cracks or failures in the fuel cladding.

Previous Westinghouse designs conservatively assumed that the ratio of fission tritium released into the coolant to the total fission tritium formed was approximately 0.30 for Zircaloy clad fuel. The operating experience at the Robert Emmett Ginna Station of the Rochester Gas and Electric Corporation, and at other operating reactors using Zircaloy clad fuel, has shown that the tritium release through the Zircaloy fuel cladding is less than the earlier estimates. Consequently, a tritium release rate into the primary coolant of 0.001 curies per megawatt-day or less can be anticipated. 99-01

11.1.4.1.2 Control Rod Source

The full length rods for the Virgil C. Summer Nuclear Station are silver-indium-cadmium. There are no reactions in these absorber materials which would produce tritium, thus eliminating any contribution from this source. Activation products from control rods are discussed in Section 11.1.1.1.

11.1.4.1.3 Boric Acid Source

A direct contribution to the reactor coolant tritium concentration is made by neutron reaction with the boron in solution. The concentration of boric acid varies with core life and load follow so that this is a steadily decreasing source during core life. The principal boron reactions are the B^{10} (n, 2α) H^3 and B^{10} (n, α) Li^7 (n, nα) H^3 reactions. The Li^7 reaction is controlled by limiting the overall lithium concentration to approximately 2 ppm during operation. Li^6 is essentially excluded from the system by utilizing 99.9% Li^7.

11.1.4.1.4 Burnable Shim Rod Source

These rods are in the core only during the first operating cycle and their potential tritium contribution occurs only during this period.

11.1.4.1.5 Lithium and Deuterium

Lithium and deuterium reactions contribute only minor quantities to the tritium inventory as shown in Table 11.1-7. These sources are due to the activation of the lithium and deuterium in the Reactor Coolant System as they pass through the reactor.

11.1.4.2 Design Bases

The design intent is to reduce the tritium sources in the Reactor Coolant System to a practical minimum to permit longer retention of the reactor coolant within the plant without compromising operator exposures. Reduction of source terms is provided by utilizing silver-indium-cadmium control rods and the determination that the quantity of tritium released from the fuel rods with Zircaloy cladding is less than originally expected.

11.1.4.3 Design Evaluation

Table 11.1-7 lists the present expected release of tritium to the reactor coolant. It will be noted that there are two principle contributors to the tritium production: ternary fission source and the dissolved boron in the reactor coolant . 99-01

99-01

For a leakage from the Reactor Coolant System into the Reactor Building atmosphere of 50 pounds per day with an assumed tritium concentration of 3.5 µCi/gm, the tritium concentration in the Reactor Building atmosphere would be low enough to permit access with no Reactor Building purge and without protective equipment by plant maintenance personnel for an average of 2 hours per week.

During refueling operations, a refueling water concentration activity of 2.5 µCi/gm is expected to result in Reactor Building air concentrations at or below the 10 CFR 20 occupational Maximum Permissible Concentration (MPC) value. This concentration would permit 40 hours per week access to the Reactor Building.

Although the actual relationship between reactor coolant activities and Reactor Building air concentrations will be determined by the particular operating conditions inside the Reactor Building (temperature, relative humidity, ventilation purge rate, etc.), field measurements indicate that the design objective of 3.5 µCi/gm in the reactor coolant and 2.5 µCi/gm in the refueling water are reasonable values.

11.1.5 REFERENCES

1. "Source Term Data for Westinghouse Pressurized Water Reactors," WCAP-8253, Revision 1, July, 1975.

2. ANSI/ANS-18.1-1984, "Radioactive Source Terms for Normal Operation of Light Water Reactors". 99-01

3. "Radiation Analysis Manual," Virgil C. Summer (CGE), CGE / 3-1, Revision 0, 12/92.

TABLE 11.1-1

PARAMETERS USED IN THE CALCULATION OF REACTOR COOLANT FISSION AND CORROSION PRODUCT ACTIVITIES

1.	Ultimate core thermal power, MWt	2958
2.	Clad defects, as a percent of rated core thermal power being generated by rods with clad defects	1.0
3.	Reactor coolant liquid volume, ft^3	8830
4.	Reactor coolant full power average temperature, °F	592.8
5.	Reactor coolant density at system operating temperature and pressure, g/cc	0.7
6.	Purification flowrate, gpm	60
7.	Effective cation demineralizer flow, gpm	6.0
8.	Volume control tank volumes	
	a. Vapor, ft^3	150
	b. Liquid, ft^3	150
9.	Fission product escape rate coefficients:	
	a. Noble gas isotopes, sec^{-1}	6.5×10^{-8}
	b. Br, Rb, I, and Cs isotopes, sec^{-1}	1.3×10^{-8}
	c. Te isotopes, sec^{-1}	1.0×10^{-9}
	d. Mo, Tc, and Ag isotopes, sec^{-1}	2.0×10^{-9}
	e. Sr and Ba isotopes, sec^{-1}	1.0×10^{-11}
	f. Y, Zr, Nb, Ru, Rh, La, Ce, and Pr isotopes, sec^{-1}	1.6×10^{-12}
10.	Mixed bed demineralizers decontamination factors:	
	a. Br, I, Sr, and Ba	10.0
	b. Noble gases and all other isotopes	1.0
11.	Cation bed demineralizer decontamination factors	
	a. Kr and Xe isotopes	1
	b. Sr and Ba isotopes	1
	c. Rb-86, Cs-134, and Cs-137	10
	d. Rb-88, Rb-89, Cs-136, and Cs-138	1
	e. Other isotopes	1

99-01

TABLE 11.1-1 (Continued)

PARAMETERS USED IN THE CALCULATION OF REACTOR COOLANT FISSION AND CORROSION PRODUCT ACTIVITIES

12. Volume control tank noble gas stripping fractions:

Isotope	Stripping Fraction [1]
Kr-85	6.0×10^{-5}
Kr-85m	5.6×10^{-1}
Kr-87	8.2×10^{-1}
Kr-88	6.7×10^{-1}
Xe-131m	1.3×10^{-2}
Xe-133	3.0×10^{-2}
Xe-133m	6.8×10^{-2}
Xe-135	3.0×10^{-1}
Xe-135m	9.4×10^{-1}
Xe-138	9.4×10^{-1}

13. Initial boron concentrations	
High [2]	2100
Low [3]	1200
14. Pressurizer volumes	
a. Vapor, ft^3	577
b. Liquid, ft^3	865
15. Spray line flow, gpm	2.0
16. Pressurizer stripping fractions	
a. Noble gases (except Kr-85)	1.0
b. Kr-85	0.9
c. All other elements	0
17. Fuel cycle times (effective full power days)	
Equilibrium cycle	480
18. Number of reactor coolant loops	3

99-01

(1) Assuming no volume control tank purge.

(2) High value is assumed where high boron concentration is conservative. (i.e., tritium production).

(3) Low value is assumed where low feed and bleed is conservative. (e.g., coolant fission product activities).

TABLE 11.1-1 (Continued)

PARAMETERS USED IN THE CALCULATION OF REACTOR COOLANT FISSION AND CORROSION PRODUCT ACTIVITIES

19. Corrosion product parameters		
Core wetted areas, effective (in^2)		
a. Zirlo	7.6×10^6	
b. Stainless steel	4.9×10^5	
c. Inconel	7.7×10^5	
Out of core wetted area, Inconel (in^2)	3.2×10^7	99-01
Coolant velocity (ft/sec)		
a. Core	14.0	
b. Steam generator	18.0	
Nominal base metal release rates (mg/dm^2-mo)		
a. Zirlo	0.0	
b. Stainless steel	0.5	
c. Inconel	1.0	

TABLE 11.1-2

REACTOR COOLANT EQUILIBRIUM FISSION AND CORROSION PRODUCT ACTIVITIES

(Based on parameters given in Table 11.1-1)

Isotope	Activity μCi/gm
Fission Products	
Br-84	4.2×10^{-2}
Rb-88	3.8
Sr-89	4.0×10^{-3}
Sr-90	2.0×10^{-4}
Sr-91	5.3×10^{-3}
Sr-92	1.2×10^{-3}
Y-90	5.7×10^{-5}
Y-91	5.4×10^{-4}
Y-92	1.1×10^{-3}
Zr-95	6.7×10^{-4}
Nb-95	6.7×10^{-4}
Mo-99	7.9×10^{-1}
I-131	3.0
I-132	3.1
I-133	4.6
I-134	6.0×10^{-1}
I-135	2.4
Te-132	2.9×10^{-1}
Te-134	2.8×10^{-2}
Cs-134	4.4
Cs-136	4.5
Cs-137	2.1
Cs-138	9.7×10^{-1}
Ba-140	4.4×10^{-3}
La-140	1.4×10^{-3}
Ce-144	4.7×10^{-4}
Pr-144	4.7×10^{-4}
Kr-85	7.6
Kr-85m	1.8
Kr-87	1.1
Kr-88	3.2
Xe-131m	2.3
Xe-133	2.9×10^{2}
Xe-133m	1.9×10^{1}
Xe-135	8.6
Xe-135m	5.2×10^{-1}
Xe-138	6.4×10^{-1}
Mn-54	4.1×10^{-4}
Mn-56	2.2×10^{-2}
Co-58	1.4×10^{-2}
Co-60	1.3×10^{-3}
Fe-59	5.2×10^{-4}
Cr-51	5.5×10^{-3}

99-01

TABLE 11.1-3
VOLUME CONTROL TANK EQUILIBRIUM ACTIVITIES

(Based on parameters given in Table 11.1-1)

Isotope	Vapor Activity (μCi/cc)
Kr-83m	3.3×10^{0}
Kr-85	1.6×10^{2}
Kr-85m	1.9×10^{1}
Kr-87	4.9×10^{0}
Kr-88	2.5×10^{1}
Xe-131m	3.2×10^{1}
Xe-133	4.2×10^{3}
Xe-133m	2.7×10^{2}
Xe-135	1.1×10^{2}
Xe-135m	9.4×10^{0}
Xe-138	6.5×10^{-1}

Isotope	Liquid Activity (μCi/gm)
Kr-88	8.9×10^{-1}
Rb-88	3.8×10^{0}
Xe-133	1.7×10^{2}
Xe-135	4.3×10^{0}
Cs-134	4.4×10^{0}
Cs-136	4.5×10^{0}
Cs-137	2.1×10^{0}
Cs-138	9.7×10^{-1}
I-131	3.0×10^{0}
I-132	3.1×10^{0}
I-133	4.6×10^{0}
I-134	6.0×10^{-1}
I-135	2.4×10^{0}

99-01

TABLE 11.1-4

PRESSURIZER ACTIVITIES

(Based on parameters given in Table 11.1-1)

Isotope	Vapor Activity (μCi/cc)
N-16	1.5×10^{-3}
Kr-83m	1.8×10^{-2}
Kr-85	2.3×10^{1}
Kr-85m	2.1×10^{-1}
Kr-87	2.8×10^{-2}
Kr-88	2.2×10^{-1}
I-131	3.0×10^{-2}
I-132	3.1×10^{-2}
I-133	4.6×10^{-2}
I-134	6.0×10^{-3}
I-135	2.4×10^{-2}
Xe-131m	5.1
Xe-133	6.3×10^{2}
Xe-133m	2.8×10^{1}
Xe-135	2.1
Xe-135m	7.8×10^{-4}
Xe-138	7.9×10^{-4}

99-01

Isotope	Liquid Activity (μCi/gm)
N-16 (maximum)	2.9
Rb-88	3.8
I-132	3.1
I-133	4.6
I-135	2.4
Cs-134	4.4
Cs-136	4.5
Cs-138	9.7×10^{-1}
Kr-88	3.2
Xe-133	2.9×10^{2}
Xe-135	8.6

NOTE: See Section 11.1.1.4 for additional information.

TABLE 11.1-5
Normal Plant Operation Source Terms
Group I - Noble Gases
(Based on ANSI / ANS-18.1-1984)

No VCT Purge

Nuclide	Y Parameter	Reactor Coolant Activity (μCi/gram)	Steam Generator Steam Activity (μCi/gram)
Kr-85m	5.2×10^{-1}	1.6×10^{-1}	3.9×10^{-8}
Kr-85	5.1×10^{-5}	6.1×10^{-1}	1.5×10^{-7}
Kr-87	7.9×10^{-1}	1.7×10^{-1}	3.9×10^{-8}
Kr-88	6.3×10^{-1}	2.9×10^{-1}	7.2×10^{-8}
Xe-131m	1.1×10^{-2}	7.4×10^{-1}	1.8×10^{-7}
Xe-133m	5.9×10^{-2}	6.6×10^{-2}	1.7×10^{-8}
Xe-133	2.5×10^{-2}	2.5×10^{0}	6.1×10^{-7}
Xe-135m	9.3×10^{-1}	1.6×10^{-1}	3.8×10^{-8}
Xe-135	2.7×10^{-1}	8.3×10^{-1}	2.1×10^{-7}
Xe-137	9.8×10^{-1}	4.2×10^{-2}	1.0×10^{-8}
Xe-138	9.3×10^{-1}	1.5×10^{-1}	3.5×10^{-8}

99-01

VCT Purge of 2.36×10^{2} cm^3/sec

Nuclide	Y Parameter	Reactor Coolant Activity (μCi/gram)	Steam Generator Steam Activity (μCi/gram)
Kr-85m	7.0×10^{-1}	1.5×10^{-1}	3.7×10^{-8}
Kr-85	5.7×10^{-1}	1.1×10^{-2}	2.7×10^{-9}
Kr-87	8.3×10^{-1}	1.7×10^{-1}	3.9×10^{-8}
Kr-88	7.5×10^{-1}	2.8×10^{-1}	7.0×10^{-8}
Xe-131m	4.7×10^{-1}	7.6×10^{-2}	1.8×10^{-8}
Xe-133m	4.9×10^{-1}	2.4×10^{-2}	6.0×10^{-9}
Xe-133	4.8×10^{-1}	4.8×10^{-1}	1.2×10^{-7}
Xe-135m	9.3×10^{-1}	1.6×10^{-1}	3.8×10^{-8}
Xe-135	5.5×10^{-1}	6.8×10^{-1}	1.7×10^{-7}
Xe-137	9.8×10^{-1}	4.2×10^{-2}	1.0×10^{-8}
Xe-138	9.4×10^{-1}	1.5×10^{-1}	3.5×10^{-8}

TABLE 11.1-5 (Continued)
Normal Plant Operation Source Terms
Groups II, III, IV, and V
(Based on ANSI / ANS-18.1-1984)

Group II - Halogens

Nuclide	Reactor Coolant Activity (μCi/gram)	Steam Generator Liquid Activity (μCi/gram)	Steam Generator Steam Activity (μCi/gram)
Br-84	2.0×10^{-2}	1.2×10^{-7}	1.2×10^{-9}
I-131	5.0×10^{-2}	3.6×10^{-6}	3.6×10^{-8}
I-132	2.6×10^{-1}	5.4×10^{-6}	5.4×10^{-8}
I-133	1.6×10^{-1}	9.3×10^{-6}	9.3×10^{-8}
I-134	4.2×10^{-1}	4.0×10^{-6}	4.0×10^{-8}
I-135	3.1×10^{-1}	1.2×10^{-5}	1.2×10^{-7}

Group III - Rubidium, Cesium

Nuclide	Reactor Coolant Activity (μCi/gram)	Steam Generator Liquid Activity (μCi/gram)	Steam Generator Steam Activity (μCi/gram)
Rb-88	2.3×10^{-1}	8.6×10^{-7}	4.2×10^{-9}
Cs-134	7.5×10^{-3}	5.5×10^{-7}	2.9×10^{-9}
Cs-136	9.3×10^{-4}	6.7×10^{-8}	3.4×10^{-10}
Cs-137	9.9×10^{-3}	7.4×10^{-7}	3.7×10^{-9}

99-01

Group IV - N-16

Nuclide	Reactor Coolant Activity (μCi/gram)	Steam Generator Liquid Activity (μCi/gram)	Steam Generator Steam Activity (μCi/gram)
N-16	4.0×10^{1}	1.3×10^{-6}	1.3×10^{-7}

Group V - Tritium

Nuclide	Reactor Coolant Activity (μCi/gram)	Steam Generator Liquid Activity (μCi/gram)	Steam Generator Steam Activity (μCi/gram)
H-3	1.0×10^{0}	1.0×10^{-3}	1.0×10^{-3}

TABLE 11.1-5 (Continued)
Normal Plant Operation Source Terms
Group VI - Miscellaneous Nuclides
(Based on ANSI / ANS-18.1-1984)

Nuclide	Reactor Coolant Activity (μCi/gram)	Steam Generator Liquid Activity (μCi/gram)	Steam Generator Steam Activity (μCi/gram)
Na-24	5.3×10^{-2}	2.8×10^{-6}	1.4×10^{-8}
Cr-51	3.3×10^{-3}	2.5×10^{-7}	1.2×10^{-9}
Mn-54	1.7×10^{-3}	1.2×10^{-7}	6.2×10^{-10}
Fe-55	1.3×10^{-3}	9.3×10^{-8}	4.7×10^{-10}
Fe-59	3.2×10^{-4}	2.3×10^{-8}	1.2×10^{-10}
Co-58	4.9×10^{-3}	3.6×10^{-7}	1.8×10^{-9}
Co-60	5.6×10^{-4}	4.2×10^{-8}	2.1×10^{-10}
Zn-65	5.4×10^{-4}	4.0×10^{-8}	1.9×10^{-10}
Sr-89	1.5×10^{-4}	1.1×10^{-8}	5.5×10^{-11}
Sr-90	1.3×10^{-5}	9.3×10^{-10}	4.7×10^{-12}
Sr-91	1.1×10^{-3}	5.2×10^{-8}	2.6×10^{-10}
Y-90	1.5×10^{-6}	1.1×10^{-10}	5.7×10^{-13}
Y-91m	5.6×10^{-4}	5.3×10^{-9}	2.7×10^{-11}
Y-91	5.5×10^{-6}	4.0×10^{-10}	2.1×10^{-12}
Y-93	4.8×10^{-3}	2.2×10^{-7}	1.1×10^{-9}
Zr-95	4.2×10^{-4}	3.0×10^{-8}	1.5×10^{-10}
Nb-95	3.0×10^{-4}	2.1×10^{-8}	1.1×10^{-10}
Mo-99	7.0×10^{-3}	4.7×10^{-7}	2.3×10^{-9}
Tc-99m	5.5×10^{-3}	2.0×10^{-7}	1.0×10^{-9}
Ru-103	8.0×10^{-3}	5.9×10^{-7}	3.0×10^{-9}
Ru-106	9.6×10^{-2}	7.0×10^{-6}	3.4×10^{-8}
Rh-103m	9.2×10^{-3}	5.2×10^{-7}	2.7×10^{-9}
Rh-106	1.1×10^{-1}	6.0×10^{-6}	2.9×10^{-8}
Ag-110m	1.4×10^{-3}	1.0×10^{-7}	5.1×10^{-10}
Te-129m	2.0×10^{-4}	1.5×10^{-8}	7.4×10^{-11}
Te-129	2.9×10^{-2}	3.7×10^{-7}	1.9×10^{-9}
Te-131m	1.7×10^{-3}	1.0×10^{-7}	5.1×10^{-10}
Te-131	9.5×10^{-3}	4.8×10^{-8}	2.5×10^{-10}
Te-132	1.8×10^{-3}	1.2×10^{-7}	6.2×10^{-10}
Ba-137m	9.4×10^{-3}	7.0×10^{-7}	3.5×10^{-9}
Ba-140	1.4×10^{-2}	9.8×10^{-7}	4.9×10^{-9}
La-140	2.7×10^{-2}	1.8×10^{-6}	8.7×10^{-9}
Ce-141	1.6×10^{-4}	1.2×10^{-8}	5.9×10^{-11}
Ce-143	3.1×10^{-3}	1.9×10^{-7}	9.6×10^{-10}
Ce-144	4.3×10^{-3}	3.0×10^{-7}	1.6×10^{-9}
Pr-143	3.7×10^{-3}	2.3×10^{-7}	1.2×10^{-9}
Pr-144	4.9×10^{-3}	2.6×10^{-7}	1.3×10^{-9}
W-187	2.8×10^{-3}	1.6×10^{-7}	8.3×10^{-10}
Np-239	2.4×10^{-3}	1.6×10^{-7}	7.9×10^{-10}

99-01

TABLE 11.1-6

PARAMETERS USED TO DESCRIBE THE REACTOR SYSTEM-REALISTIC MODEL

Parameter	Symbol	Units		
Thermal power	P	MWt	2958	
Steam flowrate	FS	lbs/hr	1.3×10^7	
Weight of water in the Reactor Coolant System	WP	lbs	3.9×10^5	
Weight of water in all steam generators	WS	lbs	3.4×10^5	
Reactor coolant letdown flow (purification)	FD	lbs/hr	3.0×10^4	
Reactor coolant letdown flow (yearly average for boron control)	FB	lbs/hr	300	
Steam generator blowdown flow (total)	FBD	lbs/hr	4.2×10^4	
Fraction of radioactivity in blowdown stream which is not returned to the secondary coolant system	NBD	-	1.0	
Flow through the purification system cation demineralizer	FA	lbs/hr	3.0×10^3	99-01
Ratio of condensate demineralizer flowrate to the total steam flowrate	NC	-	0.0	
Ratio of the total amount of noble gases routed to gaseous radwaste from the purification system to the total amount of noble gases routed to the primary coolant system from the purification system (not including the Boron Recycle System)	Y	-	See Table 11.1-5	
Primary to Secondary Leak Rate	-	lbs/day	100	

TABLE 11.1-7

TRITIUM PRODUCTION

Tritium Source	Expected Release to Reactor Coolant Curies/Cycle
Produced in Core	
Ternary Fissions	1420
IFBA's	237
Produced in Coolant	
Soluble Boron	805
Soluble Lithium	142
Deuterium	3.24
Total	2607

99-01

Note: Power level = 2958 MWt
IFBA B-10 mass = 1730 gm
Initial cycle reactor coolant boron concentration = 1200 ppm
Equilibrium cycle reactor coolant boron concentration = 2100 ppm
Lithium concentration (99.9 atom percent Li^7) = 2.2 ppm

11.2 LIQUID WASTE SYSTEMS

This section describes the design and operating features of the Liquid Waste Processing System (LWPS). In addition the total plant liquid releases from all sources are estimated and summarized in Section 11.2.6. Section 11.2.2 describes an upper limit system capacity which can be maintained for an indefinite period of time.

11.2.1 DESIGN OBJECTIVES

The LWPS is designed to receive, control, segregate, process, reuse, and discharge liquid wastes. The system design considers potential personnel exposure and assures that quantities of radioactive releases to the environment are in accordance with 10 CFR 50, Appendix I.

Under normal plant operation, the activity from radionuclides leaving the penstock of the Fairfield Pumped Storage Facility, due to releases from the LWPS, is a small fraction of the effluent concentration limits (ECLs) as defined in Appendix B of 10 CFR 20.

Section 11.2.6 establishes that the LWPS adequately meets the above listed design objectives.

11.2.2 SYSTEMS DESCRIPTIONS

The LWPS primarily collects and processes potentially radioactive wastes for release to the environment. Provisions are made to sample and analyze fluids before they are discharged. Based on the laboratory analysis, these wastes are either released under controlled conditions via the penstocks of the Fairfield Pumped Storage Facility or retained for further processing. Permanent records of liquid releases are provided by analyses of known volumes of waste. Alternatively, the liquid waste may be reused in the plant. RN 03-038

The bulk of the radioactive liquids discharged from the Reactor Coolant System are processed by the Reactor Grade Demineralizer System discussed in Section 9.3.6. This limits input to the LWPS and results in processing of relatively small quantities of generally low activity level wastes.

The LWPS consists of 5 collection systems which are provided by the waste holdup tank, floor drain tank, the laundry and hot shower tank, the excess liquid waste processing system (the excess waste holdup tank and the decon pit collection tank) and the laboratory drain system. Capability for handling and storage of spent demineralizer resins is also provided.

The LWPS does not include provisions for processing secondary system wastes. The Nuclear Blowdown Processing System is discussed in Section 10.4.8. The segregation of primary and secondary side wastes is maintained since ammonia from the secondary side could result in the loss of LWPS demineralizer efficiency, and condenser inleakage could lead to undesirable chemical inclusion in the LWPS. Additionally, the mixing of

low activity wastes (secondary side) with those of higher activity (primary side) should be avoided since a large volume of contaminated water is produced. The present design, which segregates primary and secondary wastes, minimizes the amount of water which must be processed by discharging low activity wastes directly, where permissible, with no treatment.

In the event of equipment faults of moderate frequency (Section 11.2.4.2), the LWPS is capable of processing up to 1 gpm of primary coolant leakage with no change in system operation.

As a practical upper limit of system operation, the LWPS can process 25 gpm not including laundry type effluents which are normally discharged without processing. This liquid may be collected in either the floor drain tank or waste holdup tank or in both tanks.

Instrumentation and controls necessary for the operation of the LWPS are located on a control board in the Auxiliary Building. Any alarm on this control board is relayed to the main control board in the Control Room.

11.2.2.1 Waste Holdup Tank

RN 03-038

The waste holdup tank is provided to collect both reactor and non-reactor grade water which enters the LWPS via equipment leaks and drains, valve leakoffs, pump seal leakoffs, tank overflows, reactor building sump flows and other tritiated and aerated water sources.

Deaerated tritiated water inside the Reactor Building from sources such as valve leakoffs, which is collected in the reactor coolant drain tank, need not enter the waste holdup tank. These may be routed directly to the recycle holdup tanks for processing.

The basic composition of the liquid collected in the waste holdup tank is normally boric acid and water with some radioactivity. Liquid collected in this tank is normally processed through the Waste Water System (Duratek demineralizers) and released to the environment under controlled conditions.

Liquid wastes are released from the waste monitor tanks through the penstocks of the Fairfield Pumped Storage Facility. The discharge valve is interlocked with a process radiation monitor and closes automatically when the radioactivity concentration in the liquid discharge exceeds a preset limit. The waste monitor tanks act as a reservoir for storing waste which is to be released from the LWPS to the Fairfield Pumped Storage Facility. Prior to entering these tanks, the liquid may pass through a waste monitor tank demineralizer and a waste monitor tank filter, if required for additional cleanup.

Normally, the waste monitor tank demineralizer and filter are bypassed. A sample is taken and, after analysis, the results are logged and the liquid is discharged. This radiation monitor, RM-L5, is described in Section 11.4. Liquid waste discharge flow and volume are recorded.

11.2.2.2 Floor Drain Tank

The floor drain tank is provided to collect non-reactor grade (non-recyclable) liquid wastes. These include floor drains, equipment drains containing non-reactor grade water, and other non-reactor grade sources. Normally only non-radioactive water is collected in the floor drain tank which can then be sent directly to the waste monitor tank without processing and subsequently discharged. If there is activity in the floor drain tank liquid and is such that the discharge limits cannot be met without cleanup, the liquid may be processed through the Waste Water System (Duratek demineralizers) and released under controlled conditions via the penstocks of the Fairfield Pumped Storage Facility.

Non-recyclable reactor coolant leakage normally enters the floor drain tank from system leaks in the Auxiliary Building via the floor drains. This liquid is not reused because it is diluted and contaminated by non- reactor grade water entering the floor drain tank from other sources. Sources of water include fan cooler leaks, secondary side steam and feedwater leaks, component cooling water leaks, and decontamination water.

11.2.2.3 Laundry and Hot Shower Tank

RN 03-038

Laundry and hot shower drains normally need no treatment for removal of radioactivity. This water is transferred to waste monitor tank number 2 via the laundry and hot shower filter. A sample is taken and, after analysis, the results are logged and the water is discharged if the activity level is below acceptable limits.

11.2.2.4 Excess Liquid Waste Processing System (ELWS)

The ELWS consists of 2 storage tanks, the excess waste holdup tank and the decon pit collection tank.

The excess waste holdup tank is used to accept excess liquid waste from the floor drain tank, laundry and hot shower tank, and waste holdup tank when these tanks are filled to capacity. The liquid from this tank can be recycled back to these tanks, released directly to the environment via the waste monitor tank or processed through the Duratek demineralizers prior to release from the plant.

The decon pit collection tank collects liquid from the Fuel Handling Building sumps, the Radiological Maintenance Building drains, excess waste holdup tank sump, excess waste holdup area sump and decon pit drains. If the activity in this tank liquid is such that the discharge limits cannot be met without cleanup, the liquid is processed through the Duratek demineralizers and released under controlled conditions via the penstocks of the Fairfield Pumped Storage Facility.

This system also normally receives liquid waste from the Normal and Post Accident Sampling System waste pump. In addition, the Turbine Building Floor Drain System discharge will be directed to the ELWS when excessive radioactive discharge is detected by radiation monitor number RM-L8.

11.2.2.5 Laboratory Drain System

The laboratory drain system consists of three sinks in the radiochemical laboratory and two sinks in the sample room.

In the radiochemical laboratory spent reactor coolant samples, equipment rinse water and other non-reactor grade fluids are disposed of in the two sinks that drain to the floor drain tank. No liquids or wastes are intentionally disposed of in the sink that drains to the chemical drain tank.

In the sample room, excess sample purges of reactor grade water and excess reactor coolant samples are drained from one sink to the waste holdup tank for processing. The other sink is used for draining non-reactor grade fluids to the nuclear blowdown holdup tank.

11.2.2.6 Waste From Spent Resin

RN 03-038

The spent resin sluice portion of the LWPS consists of a spent resin storage tank, a spent resin sluice pump, and a spent resin sluice filter. The equipment is arranged such that the resin sluice water after entering a demineralizer vessel returns to the spent resin storage tank for reuse. The purpose of this system is to transport spent resin to the spent resin storage tank without generating large volumes of waste liquid. This is accomplished by reusing the sluice water for subsequent resin sluicing operations.

11.2.3 SYSTEM DESIGN

11.2.3.1 Component Design

Principal design parameters for the LWPS equipment are given in Table 11.2-2. Parts or components in contact with borated water are fabricated from or clad with austenitic stainless steel except for the Royal Flex hose provided by the vendor as an integral part of the Duratek demineralizers. The Royal Flex hose is a reinforced Thermoplastic Vinyl Nitrile hose. Pumps are provided with vent and drain connections.

Component safety classes and the corresponding code and code class are shown in Table 3.2-1. Except for flanged joints and quick disconnect couplings, all-welded construction is used.

Table 11.2-3 lists the isotopic inventory of each major component, using the following assumptions:

1. Concentrations based on an equivalent fuel defect level of 1 percent. Values given in the table indicate liquid activity only.

2. For tanks upstream of the Duratek system (floor drain tank, waste holdup tank) the tanks were assumed 80 percent full of primary coolant.

3. The tanks downstream of the Duratek system were assumed 80 percent full of processed primary coolant.

4. The Duratek system components for a typical lineup are shown in Figure 11.2-5.

5. The laundry and hot shower tank was assumed 80 percent full of laundry waste water.

These activities are the recommended source terms for the analysis of consequences of a postulated failure of the LWPS components.

11.2.3.1.1 Pumps

11.2.3.1.1.1 Reactor Coolant Drain Tank Pumps

RN 03-038

Two (2) pumps are provided. One (1) reactor coolant drain tank pump provides sufficient flow for normal tank operation with 1 pump for standby.

11.2.3.1.1.2 Waste Evaporator Feed Pump

One (1) pump of standard design is used. The waste evaporator feed pump is used to transfer liquid from the waste holdup tank. The pump trips off in auto.

11.2.3.1.1.3 Waste Evaporator Condensate Pump

The waste evaporator condensate pump is a transfer pump. One (1) pump of standard design is used to transfer the contents of the waste evaporator condensate tank to the waste monitor tank.

11.2.3.1.1.4 Chemical Drain Tank Pump

The chemical drain tank pump is of standard design and is used to transfer the liquid from the chemical drain tank.

11.2.3.1.1.5 Spent Resin Sluice Pump

This pump is identical to the reactor coolant drain tank pumps. Its delivery flow is based on the required velocity to sluice resin.

11.2.3.1.1.6 Laundry and Hot Shower Tank Pump

The laundry and hot shower tank pump is of standard design and is used to transfer the water to the waste monitor tank.

11.2.3.1.1.7 Floor Drain Tank Pump

The floor drain tank pump is of standard design and is used to normally transfer water to the waste monitor tank.

11.2.3.1.1.8 Waste Monitor Tank Pumps

A waste monitor tank pump is of standard design and is used for each tank to discharge water from the LWPS or for recycle if further processing is required. The pump may also be used for circulating the water in the waste monitor tank in order to obtain uniform tank contents and hence a representative sample before discharge. The pump can be throttled to achieve the desired discharge rate.

11.2.3.1.1.9 Excess Liquid Waste Pumps

The two (2) excess liquid waste pumps are used to transport the waste fluid from the excess waste holdup tanks through the processing portion of the ELWS and to return waste to the LWPS. These pumps also circulate the waste in the tank to obtain proper mixing prior to sampling tank contents. RN 03-038

11.2.3.1.2 Reactor Coolant Drain Tank Heat Exchanger

The reactor coolant drain tank heat exchanger is a U-tube type with 1 shell pass and 4 tube passes. Although the heat exchanger is normally used in conjunction with the reactor coolant drain tank, it can also cool the pressurizer relief tank contents from 200 to 120°F in less than 8 hours.

11.2.3.1.3 Tanks

11.2.3.1.3.1 Reactor Coolant Drain Tank

One (1) tank is provided. The purpose of the reactor coolant drain tank is to collect leakoff type drains inside the Reactor Building at a central collection point for further disposition through a single penetration via the reactor coolant drain tank pumps. The tank provides surge and net positive suction head requirements to the pumps.

Only water which can be directed to the recycle holdup tanks enters the reactor coolant drain tank. The water must be compatible with reactor coolant and it must not contain dissolved air.

Sources of water entering the reactor coolant drain tank include the reactor vessel flange leakoff, valve leakoffs, number 3 seal leakoffs from the reactor coolant pumps and the excess letdown heat exchanger flow. No continuous leakage is expected from the reactor vessel flange during operation. RN 14-043

A constant level is maintained in the tank to minimize the amount of gas sent to the gaseous waste processing system and also to minimize the amount of hydrogen required. The level is maintained by running 1 pump continuously and using a proportional control valve in the discharge line. This valve operates on a signal from a level controller to limit the flow out of the system. The remainder of the flow is recirculated to the tank.

11.2.3.1.3.2 Waste Holdup Tank

One (1) atmospheric pressure tank is provided outside the Reactor Building to collect equipment drains, valve and pump seal leakoffs, recycle holdup tank overflows, reactor building sump fluid and other water from tritiated aerated sources.

11.2.3.1.3.3 Waste Evaporator Condensate Tank

One (1) tank with a diaphragm to exclude air is provided to collect low level liquid waste prior to sending it to the waste monitor tank. RN 03-038

11.2.3.1.3.4 Chemical Drain Tank

One (1) tank is available to collect chemically contaminated tritiated water from the laboratories, however, this tank is normally not used.

11.2.3.1.3.5 Spent Resin Storage Tank

The purpose of the spent resin storage tank is to provide a collection point for spent resin to allow for decay of short lived radionuclides before disposal. The tank serves also as a head tank for the spent resin sluice pump.

The tank is designed so that sufficient pressure can be applied in the gas space of the tank to push resin out and to the solid waste disposal unit, which is at a higher elevation than the spent resin storage tank.

The spent resin storage tank is shielded to limit the dose to personnel.

11.2.3.1.3.6 Laundry and Hot Shower Tank

One (1) atmospheric pressure tank is used to collect laundry and hot shower drains.

11.2.3.1.3.7 Floor Drain Tank

One (1) atmospheric pressure tank is used to collect floor drains from the reactor plant.

11.2.3.1.3.8 Waste Monitor Tanks

The 2 atmospheric waste monitor tanks are provided for monitoring liquid discharges from the plant site. Each tank is sized to hold a volume large enough such that sampling requirements are minimized, thus minimizing further laboratory effluent.

11.2.3.1.3.9 Excess Waste Holdup Tank

The excess waste holdup tank normally receives liquid waste from the floor drain tank, laundry and hot shower tank, and waste holdup tank when these tanks are filled to capacity.

This system also normally receives liquid waste from the Normal and Post Accident Sampling System waste pump. In addition, the Turbine Building Floor Drain System discharge will be directed to this tank when excessive radioactive discharge is detected by radiation monitor number RM-L8.

11.2.3.1.3.10 Decontamination Pit Collection Tank RN 03-038

The decontamination pit collection tank receives drainage from the Fuel Handling Building sumps, the Radiological Maintenance Building drains, excess waste holdup tank sump, excess waste holdup area sump and decon pit drains.

11.2.3.1.4 Demineralizers

As part of a continuous PWR operating plant following, Westinghouse has obtained operational data on demineralizer decontamination factors for selected isotopes. The measured range of decontamination factors for these isotopes is given in Table 11.2-4.

These values were observed across mixed bed demineralizers containing cation resin in the lithium-7 form and anion resin in the borated form.

The minimum values in Table 11.2-4 were generally observed just prior to resin flushing and recharging, while during the operating life of the demineralizer, decontamination factors were consistently closer to the maximum values.

Although specific operating decontamination factors have not as yet been measured for other isotopes, their behavior in a similar purification media may be inferred from this data. One would anticipate, for example, bromine to have a decontamination factor similar to that given above for the iodine and fluorine.

11.2.3.1.4.1 Waste Water System (Duratek Demineralizers)

The Waste Water System (Duratek demineralizers) is provided to process radioactive waste prior to release to the environment. The Duratek demineralizers are located on the 447' elevation of the Auxiliary Building. Prior to entering the mixed bed and cation Duratek demineralizers, the liquid waste stream is normally processed through a charcoal vessel. The charcoal media acts as a prefilter providing mechanical filtration capability prior to the Duratek demineralizers. The charcoal filtration provides for cleanup of oil and grease (organics), cobalt 58 and 60, initial iodines, cesium and other suspended solids.

The liquid waste stream enters the Duratek demineralizers through a booster pump, a mechanical filter, and an Influent Control Leg which monitors waste stream parameters and provides attachments for service air and water. From the Influent Control Leg, the waste may enter one of the five pressure vessels that contain media for cleanup of the liquid waste. The media normally include:

- Cation resin to remove metals and transition metals.
- Mixed bed resin that reduces undesired positive and negative ions.
- Charcoal media for cleanup of oil and grease (organics), cobalt 58 and 60, initial iodines, and cesium and for service as a prefilter to protect the other demineralizer beds.

RN 03-038

A typical lineup for the five Duratek demineralizers in series would be charcoal, cation, charcoal, cation, mixed bed with cation.

The actual required vessel lineup during normal plant operation is determined prior to processing by sampling the tank to be processed and determining the parameter(s) that are out of specification. Selection of the appropriate vessels is made by a quick-disconnect logic arrangement. After processing, decontaminated effluent passes through an Effluent Control Leg which records waste volume, and may flow through a combined resin polisher.

Polyelectrolytes may be added upstream of the second charcoal vessel to help remove colloidal cobalt. This is mainly used during an outage post reactor coolant system cleanup.

11.2.3.1.4.2 Waste Evaporator Condensate Demineralizer

One (1) demineralizer vessel is provided which is used during primary demineralizer resin (CVCS) transfer and provides a means to tie the resin supply and return headers together during resin transfer to prevent resin excursions throughout the solid waste system. The demineralizer vessel is empty (no contained resin beds) and is not used for waste decontamination.

11.2.3.1.4.3 Waste Monitor Tank Demineralizer

One (1) demineralizer is provided upstream of the waste monitor tanks.

11.2.3.1.4.4 Excess Liquid Waste Demineralizers

Two (2) redundant demineralizers are provided in the ELWS process train. Liquid wastes may be passed through 1 demineralizer prior to being discharged to a waste monitor tank.

11.2.3.1.5 Filters and Strainers

11.2.3.1.5.1 Filters

The filters provided are of a wound cartridge or spun cartridge type construction which relies on a tortuous path to filter particles with an absolute rating.

The methods employed to change filters and screens are dependent on activity levels. Filters are valved out of service with a pressure indicator between the isolation valves to assure the valves are not leaking and the filter is not at system pressure. The filter is drained to the appropriate tank and vented locally. If the radiation level of the filter is low enough, it is changed manually. If activity levels do not permit manual change, the spent cartridge is removed remotely with temporary shielding to protect personnel. The spent cartridge is placed in a shielded pig for removal to the solid waste disposal area. A new cartridge is installed, the housing is reassembled, vent and drain valves are closed, and the filter is valved into service. Filters are normally changed because of high ΔP rather than high radiation levels. RN 03-038

The excess liquid waste filters are back flushable and have cylindrical woven screen cartridges. One (1) of the 2 excess liquid waste filters removes suspended solids from the waste water upstream of the demineralizers. The second filter traps resin fines downstream of the demineralizer.

11.2.3.1.5.2 Strainers

The strainers provided are basket type which are of a mesh or screen construction. The nominal rating of the strainers is given in Table 11.2-2.

The basket type laundry and hot shower strainer is not replaced after use, but is cleaned and put back in service. Because this screen traps only large particles, it contains only negligible activity and provides no hazard to personnel. It is cleaned regularly.

The decontamination pit collection tank strainer is a duplex basket strainer that removes large suspended particles from the wastes entering the decontamination pit collection tank. This strainer is also cleaned and put back into service.

11.2.3.2 Instrumentation Design

The system instrumentation is described in Table 11.2-5. The instrumentation readout is located mainly on the Waste Processing System (WPS) panel in the Auxiliary Building and excess liquid waste panel (ELWP) in the Fuel Handling Building. Some instruments are read where the equipment is located. Alarms are shown on the WPS panel or ELWP and further relayed to 1 common WPS annunciator on the main control board in the Control Room.

Pumps are protected against loss of suction pressure by a control setpoint on the level instrumentation for the respective vessels feeding the pumps. The reactor coolant drain tank pumps and the spent resin sluice pump are in addition interlocked with flowrate instrumentation and stop operating when the delivery flows reach minimum setpoints.

Pressure indicators upstream and downstream of filters, strainers, and demineralizers provide local indications of pressure drops across each component.

All releases to the environment are monitored for radioactivity.

11.2.3.3 Tank Overflow Protection

All tanks in the Chemical and Volume Control System (CVCS), Boron Recycle System (BRS), Nuclear Blowdown Processing System (NBS), and WPS that could potentially contain radioactive liquids are designed to provide adequate warning of potential overflow conditions. A summary of the overflow protection features is given in Table 11.2-6. These tanks are provided with level indication instrumentation which has an alarm function on high liquid level in the tank. Alarm annunciation is provided separately on the local system control panel and further relayed to a common annunciator on the main control board in the Control Room for each system. A description of the level instrumentation provided for these systems is given in Sections 9.3.4.5, 9.3.6.5, 10.4.8.2, and 11.2.3.2 for the CVCS, BRS, NBS, and LWPS, respectively. RN 03-038

In addition to tank level monitoring and warning of potential overflow conditions, provisions are made in the systems design to collect and process overflows from tanks containing potentially radioactive liquids. The collection and processing provisions are delineated in Table 11.2-6. Table 11.2-6a presents a comparison of tanks with Branch Technical Position ETSB 11-1 (Rev. 1), Paragraph B.1.b, Items (1) through (4).

11.2.4 OPERATING PROCEDURES

The LWPS is manually operated except for some functions of the reactor coolant drain tank circuit. The system includes adequate control equipment to protect the system components and adequate instrumentation and alarm functions to provide operator information to ensure proper system operation.

11.2.4.1 Normal Operation

Operation of the LWPS is essentially the same during all phases of normal and defined off-normal reactor plant operation; the only differences are in the loads on the system. The following sections discuss the operation of the system in performing its various functions. In this discussion, the term "normal operation" should be taken to mean all phases of operation except operation under emergency or accident conditions. The LWPS is not regarded as an Engineered Safety Feature System.

11.2.4.1.1 Waste Holdup Tank

Water is accumulated in the waste holdup tank until sufficient quantity exists to warrant processing through the Waste Water System (Duratek demineralizers).

When this water has been sufficiently processed, it is discharged into the penstocks of the Fairfield Pumped Storage Facility at a rate so as not to exceed a small fraction of the 10 CFR 20 limits. Water leaving this system is discharged to the penstocks of the Fairfield Pumped Storage Facility and is monitored for radiation. This radiation monitor, RM-L5, is described in Section 11.4. Should the radiation monitor close the discharge valve, it must be reset/bypassed before the valve can be reopened. The monitor element can be cleared by flushing it with demineralized water from the temporary connection back to the waste monitor tank. During refueling, the load on the waste portion of the LWPS is increased but there is no change in operation.

During normal operation, the reactor coolant drain tank level regulation and pressure control are automatic and require no operator action. RN 03-038

Operation of the recycle portion of the LWPS during refueling is the same as for power operation, although the load on the system may be increased when refueling is complete. The water remaining in the fuel transfer canal following normal drain down is pumped to the suction of the refueling water purification pump by the reactor coolant drain tank pumps. When the pumps lose suction, the remainder is drained to the RB sump and pumped to the waste holdup tank for processing.

11.2.4.1.2 Floor Drain Tank

The water in the floor drain tank is sampled to determine the degree of processing required. Normally the water collected in the floor drain tank is not radioactive and can be sent directly to the waste monitor tanks. If required, it can be processed through the Waste Water System. When this water has been sufficiently processed, it is discharged into the penstocks of the Fairfield Pumped Storage Facility at a rate so as not to exceed a small fraction of the 10 CFR 20 limits. Water leaving this system is discharged to the penstocks of the Fairfield Pumped Storage Facility and is monitored for radiation. This radiation monitor, RM-L5, is described in Section 11.4. Should the radiation monitor close the discharge valve, it must be reset/bypassed before the valve can be reopened. The monitor element can be cleared by flushing it with demineralized water from the

temporary connection back to the waste monitor tank. During refueling the load on the waste portion of the LWPS is increased but there is no change in operation.

11.2.4.1.3 Laundry and Hot Shower Tank

Laundry and hot shower water enters the laundry and hot shower tank for holdup. There it is sampled, filtered, and transferred to the waste monitor tank for discharge.

11.2.4.1.4 Excess Liquid Waste Processing System (ELWS)

The excess waste holdup tank is normally only used to collect excess flow from the floor drain tank, laundry and hot shower tank, and waste holdup tank when these tanks are filled to capacity. The decontamination pit collection tank receives drainage from the Fuel Handling Building sumps, the Radiological Maintenance Building drains, excess waste holdup tank sump, excess waste holdup area sump and decon pit drains. The contents of these tanks are sampled to determine the degree of processing required. The liquid from this tank can be released directly to the environment via the waste monitor tank or if required, processed through the Duratek demineralizers prior to release from the plant. .

When this water has been sufficiently processed, it is discharged into the penstocks of the Fairfield Pumped Storage Facility at a rate so as not to exceed a small fraction of the 10 CFR 20 limits. Water leaving this system is discharged to the penstocks of the Fairfield Pumped Storage Facility and is monitored for radiation. This radiation monitor, RM-L5, is described in Section 11.4. Should the radiation monitor close the discharge valve, it must be reset/bypassed before the valve can be reopened. The monitor element can be cleared by flushing it with demineralized water from the temporary connection back to the waste monitor tank. During refueling the load on the waste portion of the LWPS is increased but there is no change in operation. RN 03-038

11.2.4.1.5 Laboratory Drain Portion

The laboratory drain system consists of three sinks in the radiochemical laboratory and two sinks in the sample room.

In the radiochemical laboratory spent reactor coolant samples, equipment rinse water and other non-reactor grade fluids are disposed of in the two sinks that drain to the floor drain tank. No liquids or wastes are intentionally disposed of in the sink that drains to the chemical drain tank.

In the sample room, excess sample purges of reactor grade water and excess reactor coolant samples are drained from one sink to the waste holdup tank for processing. The other sink is used for draining non-reactor grade fluids to the nuclear blowdown holdup tank.

11.2.4.1.6 Spent Resin Handling Portion

This portion of the system sluices resin from the demineralizers, transports resin from the spent resin storage tank to the solid waste disposal unit.

11.2.4.1.6.1 Resin Sluicing

Before resin sluicing begins, the demineralizer is valved out of service and the flowpath is aligned from the spent resin sluice pump through the process line of the demineralizer, through the screen at the top of the demineralizer, and back to the spent resin storage tank. The spent resin sluice pump provides flush water for loosening the bed for sluicing. After about 15 minutes of back flushing, the valves in the back flush circuit are closed and the sluice line is opened. The resin then flows to the spent resin storage tank. After the spent resin sluice pump is shut off the fresh resin is added via the resin fill line and the valve is then closed. The flowpath is now aligned the same as for resin flushing, e.g., through the process line, through the screen at the top of the demineralizer, and back to the spent resin storage tank. The pump is then started to remove resin fines, should any remain. The valves are then realigned for normal process operation. Resins are never sluiced through the spent resin sluice pump

RN 03-038

11.2.4.1.6.2 Resin Drumming

No resin drumming is performed on site.

11.2.4.1.7 Analysis of System Operation

In order to evaluate the expected operation of the LWPS an analysis has been performed presenting average operating parameters and expected isotopic concentrations throughout the system. The analysis is based on normal operation, including anticipated operational occurrences, of the plant and the LWPS and a realistic estimation of the potential input sources based on plant operating experience. Hence, the results are representative of the anticipated operation of the LWPS of the Virgil C. Summer Nuclear Station. The input sources assumed in the study are summarized in Table 11.2-7, and the isotopic concentrations are based on reactor coolant inventories as given in Table 11.1-5. The resulting isotopic concentrations at key locations in the LWPS are given in Table 11.2-1. The study is not indicative of maximum system capacity as the maximum processing capability is considerably greater than the values given in Table 11.2-7. The analysis is not used as a basis for the plant release evaluation, which is based on the GALE Code (see Section 11.2.6).

11.2.4.2 Faults of Moderate Frequency

The system is designed to handle the occurrence of equipment faults of moderate frequency such as:

1. Malfunction in the LWPS

   Malfunction in this system could include pump, valve, or demineralizer failure. Because of pump standardization throughout the system, a spare pump can be used to replace most pumps in the system. There is sufficient surge capacity in the system to accommodate waste until the failure can be fixed and normal plant operation resumed.

2. Excessive Leakage in Reactor Coolant System Equipment

   The system is designed to handle a 1 gpm reactor coolant leak in addition to the expected leakage during normal operation.

   Operation of the system is almost the same as for normal operation except the load on the system is increased. A 1 gpm leak into the reactor coolant drain tank is handled automatically. RN 03-038

   If the 1 gpm leak enters the waste holdup tank, operation is the same as normal except for the increased load on the demineralizers. Abnormal reactor coolant leakage can also be accommodated by the floor drain tank and processed.

   As discussed in Section 11.2.2 a practical upper limit to the Duratek demineralizer processing capacity is 25 gpm. Depending on the source of the liquid the 25 gpm may be collected in either the floor drain tank or waste holdup tank or both tanks. Normally the potentially radioactive fluids are only collected in the waste holdup tank since the floor drain tank is typically used to collect non-radioactive leakage. If the flow is collected in both tanks, the effluent should be discharged after processing. It is possible to operate in this condition for an indefinite time.

3. Excessive Leakage in Auxiliary System Equipment

   Leakage of this type could include water from fan cooler leaks inside the Reactor Building which are collected in the Reactor Building sump and sent to the waste holdup tank. Other sources could be Component Cooling water leaks, Service Water Leaks, and steam and secondary side leaks. This water enters the floor drain tank and is processed and discharged as during normal operation.

NOTE 11.2.5
Section 11.2.5 is being retained for historical purposes only.

11.2.5 PERFORMANCE TESTS

Initial performance tests are performed to verify the operability of the components, instrumentation and control equipment, and applicable alarms and control setpoints.

The specific objectives are to demonstrate the following:

1. Pumps are capable of producing the flowrate and head as required.

2. Waste filters are capable of passing the required flowrate.

3. Waste evaporator is operable to specifications.

4. Instrumentation, controllers, and alarms operate satisfactorily to maintain process parameters, indicate, record, and alarm as required.

5. All sampling points are available for sampling.

During reactor operation the system is used at all times and hence is under continuous surveillance. RN 03-038

11.2.6 ESTIMATED RELEASES

Liquid releases from the Virgil C. Summer Nuclear Station are calculated using the PWR-GALE Code[1] as specified by Regulatory Guide 1.112 (see Appendix 3A). The input parameters used to calculate liquid releases are listed in Table 11.2-8 and are discussed in more detail below. Releases calculated using the parameters listed in Table 11.2-8 are presented in Tables 11.2-12 and 11.2-13. A comparison of effluent concentrations with 10 CFR 20, Appendix B, Table II, Column 2 values is presented in Section 11.2.8.

11.2.6.1 Reactor Grade Demineralizers

A conservatively estimated 300 gpd of reactor grade wastes are collected by the reactor coolant drain tank (equipment drain wastes).

The equipment drain wastes are processed via the reactor grade demineralizers prior to entering a waste monitor tank for monitoring and discharge. The release calculations use an assumed discharge fraction of 1.0.

Radioactive decay during collection of the equipment drains is conservatively calculated using a collection time of 2.08 days. Radioactive decay during processing is calculated using a process time of 0.11 days. No credit is taken for radioactive decay during discharge since the waste monitor tank may be discharged prior to complete processing.

The minimum expected decontamination factors for radionuclide removal with the Duratek system are 1,000 for iodine, 200 for cesium and rubidium and 10,000 for other nuclides. These values are based upon the decontamination factors for two mixed bed and one cation demineralizer in series. In calculating the effluent releases, the above values are conservatively reduced by a factor 10.

The isotopic distribution of this release is given in Table 11.2-12.

11.2.6.2 Liquid Waste Processing System

11.2.6.2.1 Waste Holdup Tank

Wastes from reactor grade sample drains, valve and pump leakoffs and equipment drains outside the reactor building (clean wastes) are collected in the 10,000 gallon waste holdup tank and processed through the Waste Water System. The processed wastes are pumped to a waste monitor tank for monitoring and discharge or additional processing, if required. Based upon the information in Reference [1] for liquid waste volumes and activities and on expected volumes and activities for liquid wastes not included in Reference [1] the total flow is conservatively estimated to be 200 gpd at primary coolant activity (PCA). The release calculations conservatively use a discharge fraction of 1.0. RN 03-038

Radioactive decay during collection in the waste holdup tank is calculated using a collection time of 2.08 days. This value is based upon filling the waste holdup tank to 40 percent of capacity. Radioactive decay during processing is calculated using a process time of 0.11 days. This value is based upon processing 80 percent of the waste holdup tank capacity at the design flow rate of 25 gpm. No credit is taken for radioactive decay during discharge since the waste monitor tank may be discharged before the waste holdup tank is completely processed.

The minimum expected decontamination factors for radionuclide removal with the Waste Water System are 1,000 for iodine, 200 for cesium and rubidium and 10,000 for other nuclides. These values are based upon the decontamination factors for two mixed bed and one cation demineralizer in series. In calculating the effluent releases, the above values are conservatively reduced by a factor of 10.

The isotopic distribution of this release is given in Table 11.2-12.

11.2.6.2.2 Floor Drain Tank

Wastes from floor drains, laboratory drains and miscellaneous sources are collected in a 10,000 gallon floor drain tank, sampled to determine the degree of processing required and processed as necessary through the Waste Water System. The processed wastes are then pumped to a waste monitor tank for monitoring and discharge. Based upon the information in Reference [1] for liquid waste volumes and activities, the waste flow is estimated to be 1340 gpd at 0.05 PCA. Since all of the processed wastes are normally discharged, a discharge fraction of 1.0 is used in the release calculations.

Radioactive decay during collection in the floor drain tank is calculated using a collection time of 2.97 days. This value is based upon filling the floor drain tank to 40 percent of capacity. Radioactive decay during processing is calculated using process time of 0.11 day. This value is based upon processing 80 percent of the floor drain tank capacity at the design flow rate of 25 gpm. No credit is taken for radioactive decay during discharge since the waste monitor tank may be discharged before the floor drain tank is completely processed.

The minimum expected decontamination factors for radionuclide removal with the Waste Water System are 1,000 for iodine, 200 for cesium and rubidium, and 10,000 for other nuclides. These values are based upon the decontamination factors given in Reference [1] for two mixed bed and one cation demineralizer in series. In calculating the effluent releases the above values are conservatively reduced by a factor 10. RN 03-038

The isotopic distribution of this release is given in Table 11.2-12.

11.2.6.3 Detergent Wastes

The plant typically ships all protective clothing off site for cleaning. There is a washer and dryer located in the HP area that is periodically used to clean personal garments. The potential release from this mechanism is considered negligible. Therefore, since there are no full scale onsite laundry facilities, consistent with the assumptions in the PWR-GALE Code[1], there are no releases assumed from this pathway.

11.2.6.4 Secondary System

11.2.6.4.1 Turbine Building Floor Drains

The discharge from the Turbine Building floor drains system is monitored by a flow meter and a radiation monitor since wastes collected by the Turbine Building floor drain system may contain small quantities of radioactive materials resulting from secondary system leakage. These wastes are not treated prior to discharge. The isotopic distribution of this release is given in Table 11.2-12.

The discharge flow is monitored by radiation monitor number RM-L8. If radiation discharge limits are exceeded, the sump pumps are automatically tripped and the flow path may be aligned to discharge to the Excess Liquid Waste System per plant procedure HPP-710.

11.2.6.4.2 Condensate Cleanup System

The Condensate Cleanup System is used during startup and as required during condenser leakage. Scheduled, infrequent operation minimizes the possibility of producing potentially radioactive waste. Based upon PWR-GALE Code[1] criteria and infrequent operation, polishers will have no impact on release calculations.

11.2.6.4.3 Steam Generator Blowdown

Blowdown from the steam generators is processed as required through the NBS and returned to the condenser. There are also provisions for the discharge of treated or untreated blowdown. If the blowdown contains any significant quantity of radioactivity, radiation-monitor-controlled valves automatically divert the blowdown flow to the NBS.

With the 100 lbs/day primary-to-secondary leakage used in the PWR-GALE Code[1], blowdown flow would always be diverted to the NBS. Consequently, release calculations were performed on this basis.

Blowdown that is to be processed through the NBS is routed to a 14,000 gallon holdup tank and is processed through one of two demineralizer trains, each containing a mixed bed primary demineralizer and a mixed bed polishing demineralizer. Release calculations are based upon processing 45,000 lbs/hr of blowdown through 1 of the demineralizer trains and discharging 100 percent of the treated blowdown. RN 03-038

Radioactive decay during collection in the holdup tank is calculated using a collection time of 0.01 day. This value is based upon filling the holdup tank to 40 percent capacity. No credit is taken for radioactive decay during processing or discharge.

The decontamination factors used in calculating radionuclide removal are 1,000 for iodine, 100 for cesium and rubidium, and 1,000 for other nuclides. These values are based upon the decontamination factors given in Reference[1] for 2 steam generator blowdown mixed bed demineralizers in series.

The isotopic distribution of this release is given in Table 11.2-12.

11.2.6.5 Adjustments to Liquid Radwaste Source Term for Anticipated Operational Occurrences

The PWR-GALE Code[1] increases the calculated source term by 0.15 Ci/yr per reactor using the same isotopic distribution as the calculated source term to account for anticipated operational occurrences. This adjustment, plus the calculated tritium release, results in the releases given in Table 11.2-12.

11.2.6.6 Criteria for Reuse, Discharge and Recycle

Processed liquids are normally discharged under the following conditions:

1. The processed water does not satisfy plant operating requirements for water quality and tritium buildup.

2. The effluent concentrations are within the limits specified by 10 CFR 20, Appendix B, Table II, Column 2.

3. The discharge does not cause the limits of 10 CFR 50, Appendix I to be exceeded.

Processed liquids could be reused within the plant if desired, provided that the following criteria are satisfied:

1. The plant water inventory requires makeup.

2. The water to be reused satisfies system water quality requirements.

3. Tritium buildup is less than plant operating requirements.

11.2.7 RELEASE POINTS

RN 03-038

Flow diagrams for the systems which have the potential to release radioactive materials in liquid effluents are shown by Figures 9.3-14, 9.3-18, 10.4-7a, 10.4-13, 10.4-14, 10.4-17. The locations of the release points for three systems are as follows:

Releases from the LWPS (Figure 11.2-1) and Reactor Grade System (Figure 9.3-18) are made through waste monitor tank 1 or 2 in the LWPS. Releases of detergent wastes are made through waste monitor tank 2 in the LWPS. Releases from the waste monitor tanks are piped to the penstocks of the Fairfield Pumped Storage Facility where they are diluted by the water released to the Broad River during the generating portion of the pumped hydro cycle. Planned liquid releases are made only during the generating portion of the cycle. Figure 11.2-3 shows the location of this release point relative to the plant site. Figure 11.2-4 is a close-up of the facility.

If processed steam generator blowdown (see Figure 10.4-14) is released to the environment, it is piped to the penstocks of the Fairfield Pumped Storage Facility where it is diluted by the water released through the dam during the generating portion of the cycle. If unprocessed steam generator blowdown (see Figure 10.4-13) is released to the environment, it is released through the circulating water discharge canal. During startup, blowdown may be routed to the alum sludge lagoon in the Industrial Waste System. Releases from this system are routed to the discharge canal by a 24 inch pipe which terminates at the circulating water discharge structure. The circulating water discharge canal is shown by Figure 2.4-1.

Liquid effluents from the Turbine Building floor drains (Figure 9.3-15) are released through a collecting sump in the Industrial Waste System which, when discharged, is routed to the circulating water discharge canal.

11.2.8 DILUTION FACTORS

Concentrations of radioactive effluents in waters affected by operation of the plant were calculated according to the methods set forth in Regulatory Guide 1.113. The specific rationale utilized is as follows.

During the daily generating phase of the Fairfield Pumped Storage Facility, 29,000 acre-feet of water from Monticello Reservoir will flow into Parr Reservoir. A similar amount will later be pumped back into Monticello Reservoir during periods of off-peak power demand; this volume of water is equivalent to 14,620 cfs over a 24 hour period. In contrast, the average stream flow of the Broad River at Parr Dam is about 5,600 cfs, amounting to less than 40 percent of the daily volume of water exchanged. Thus, mixing between the 2 reservoirs is expected to be relatively complete. This expectation has been confirmed by physical model studies conducted by Alden Research Laboratories[2], which indicate that effluents present in the plant discharge achieve nearly equal steady-state concentrations throughout the Parr-Monticello system. Therefore, it is preferable to consider the system as a single reservoir unit for the purposes of aquatic modeling. Several analytical models suitable for use in simulation of reservoirs and cooling ponds are described in Appendix A, Section 5, of Regulatory Guide 1.113. For the Parr-Monticello System, the pond blowdown rate, Q_b, is equivalent to the flow rate of the Broad River. A flow rate of 5,600 cfs, equal to the average stream flow of the Broad River at Parr Dam, was used. The plant pumping rate, Q_p, is the plant condenser water recirculation rate. A flow rate of 480,000 gpm, or 1,069 cfs, was utilized as an appropriate value under average conditions. The resulting recirculation factor, R, is determined by the ratio Q_b/Q_p and has a value of 5.24. Review of Figure 12 from Regulatory Guide 1.113 shows that with the above determined values of 5.24 for R and a flushing time, Vt/Qb, of 36.2 days, that the partially mixed flow model approaches the plug flow model for relatively long lived isotopes. Conservatively ignoring credit for radiological decay and use of the plug flow model is conservative for short lived isotopes. RN 03-038

Therefore, conservatively ignoring radiological decay, the dilution factor simply relates to the final flow or 5,600 cfs, equal to the average stream flow of the Broad River at Parr Dam (FSAR Table 2.4-3).

In addition to the limits for each isotope, the requirements of 10 CFR 20 state that, for a mixture of radionuclide, the following relationship must hold:

$$\sum_{i=1}^{N} \frac{C_i}{ECiL} \leq 1$$

Where:

C_i = concentration of radionuclide I.

EC_iL = effluent concentration limit (ECL) of radionuclide i from 10 CFR 20, Appendix B, Table II, Column 2.

N = number of radionuclides in the mixture.

The sum of the ratios of expected radionuclide concentrations to their ECL values for the mixture defined by the second column of Table 11.2-13 is 6.8×10^{-4}, which is less than unity, as required.

11.2.9 ESTIMATED DOSES

RN 03-038

Potential pathways of exposure of man to radioactive materials in liquid effluents from the Virgil C. Summer Nuclear Station are identified and discussed in Section 11.6.2. Doses to individuals in the environs of the plant from each of the potentially significant pathways were calculated; methodology for and results of the calculations are discussed in the following paragraphs.

All results presented in these sections were obtained using the calculational techniques prescribed in Regulatory Guide 1.109. Except where noted in discussion of doses for specific pathways, all usage and consumption values, transport times, bioaccumulation factors, dose conversion factors, and other constants utilized were those suggested in Regulatory Guide 1.109.

Dilution factors for liquid pathways were calculated according to the methods of Regulatory Guide 1.113, as discussed in Section 11.2.8.

Doses to individuals were calculated for drinking water, fish consumption, and recreational activity (swimming, boating, shoreline activity) pathways. Assumptions, including point of exposure, are described for each pathway in the following paragraphs; the calculated liquid pathway doses are summarized in Table 11.2-14. Each dose was calculated at the location of the highest dose offsite at which the pathway could be assumed to exist.

The nearest downstream point of withdrawal of drinking water for human use is at Columbia, S. C., where the city of Columbia water supply system utilizes water from the Broad River. The dose to an individual obtaining his entire annual water requirement from this system was calculated. The maximum calculated dose to a single organ from this pathway was 1.4×10^{-1} mrem/yr to an infant's liver; maximum whole body dose was 4.6×10^{-2} mrem/yr to an adult.

Radionuclides released from the plant were assumed to be immediately available for uptake by fish. For purposes of determining the annual dose to man from the fish consumption pathway, a transport time of 0 hours was used. The maximum predicted dose to a single organ from the fish consumption pathway was 3.3 mrem/yr to a teen's liver. Maximum total body dose was 1.35 mrem/yr to a teen.

Exposure to an adult swimming or boating on the reservoir or engaging in recreational activity on the shore was evaluated by assuming that the individual receiving the maximum dose spends 100, 500, and 500 hours per year, respectively, in the 3 activities. Doses from these pathways were evaluated based on the average radionuclide concentrations in the Parr-Monticello system. The doses from recreational exposure are summarized in Table 11.2-15. Maximum predicted total dose to a single organ from recreational pathways was 0.15 mrem/yr to the skin. Maximum calculated total body dose was 0.12 mrem/yr. RN 03-038

Maximum individual doses calculated as described above were used to evaluate the status of conformance of predicted liquid effluents from the Virgil C. Summer Nuclear Station with the requirements of Appendix I to 10 CFR 50. The assumptions and results of this evaluation are summarized in Table 11.2-15. It will be noted that the calculated doses indicate that liquid effluents from the plant will conform to the "as low as reasonably achievable" criteria established in Appendix I.

11.2.10 REFERENCES

1. U. S. Nuclear Regulatory Commission, "Calculation of Releases of Radioactive Materials in Gaseous and Liquid Effluents from Pressurized Water Reactors," NUREG-0017, April 1976.

2. "Radioactive Diffusion Study: Parr Hydroelectric Project for South Carolina Electric and Gas Company," Alden Research Laboratories, 1973.

Table 11.2-1

ISOTOPIC VALUES IN THE LIQUID WASTE PROCESSING SYSTEM[1]

Isotope	Input to Waste Holdup Tank	After Charcoal Processing	After Mixed Bed Processing	After Cation Processing	Input to FD Tank	After Charcoal Processing	After Mixed Bed Processing	After Cation Processing
	µCi/cc	µCi/cc	µCi/cc	µCi/cc	µCi/cc	µCi/cc	µCi/cc	µCi/cc
AG-110M	4.20E-04	4.19E-06	4.19E-07	2.09E-08	4.20E-05	4.19E-07	4.19E-08	2.09E-09
BA-137M	2.82E-03	6.97E-27	6.97E-28	0.00E+00	2.82E-04	6.97E-28	6.97E-29	0.00E+00
BA-140	4.20E-03	3.95E-05	3.95E-06	1.97E-07	4.20E-04	3.95E-06	3.95E-07	1.97E-08
CE-141	4.80E-05	4.68E-07	4.68E-08	2.34E-09	4.80E-06	4.68E-08	4.68E-09	2.34E-10
CE-143	9.30E-04	5.46E-06	5.46E-07	2.73E-08	9.30E-05	5.46E-07	5.46E-08	2.73E-09
CE-144	1.29E-03	0.00E+00	0.00E+00	0.00E+00	1.29E-04	0.00E+00	0.00E+00	0.00E+00
CO-58	1.47E-03	1.45E-05	1.45E-06	7.27E-08	1.47E-04	1.45E-06	1.45E-07	7.27E-09
CO-60	1.68E-04	1.68E-06	1.68E-07	8.40E-09	1.68E-05	1.68E-07	1.68E-08	8.40E-10
CR-51	9.90E-04	9.62E-06	9.62E-07	4.81E-08	9.90E-05	9.62E-07	9.62E-08	4.81E-09
CS-134	2.25E-03	2.25E-04	2.25E-05	1.12E-06	2.25E-04	2.25E-05	2.25E-06	1.12E-07
CS-136	2.79E-04	2.63E-05	2.63E-06	1.31E-07	2.79E-05	2.63E-06	2.63E-07	1.31E-08
CS-137	2.97E-03	2.97E-04	2.97E-05	1.49E-06	2.97E-04	2.97E-05	2.97E-06	1.49E-07
FE-55	3.90E-04	3.90E-06	3.90E-07	1.95E-08	3.90E-05	3.90E-07	3.90E-08	1.95E-09
FE-59	9.60E-05	9.43E-07	9.43E-08	4.72E-09	9.60E-06	9.43E-08	9.43E-09	4.72E-10
H-3	3.00E-01	3.00E-01	3.00E-01	1.50E-01	3.00E-02	3.00E-02	3.00E-02	1.50E-02
I-131	1.50E-02	1.36E-04	1.36E-05	6.82E-06	1.50E-03	1.36E-05	1.36E-06	6.82E-07
I-132	7.80E-02	2.74E-05	2.74E-06	1.37E-06	7.80E-03	2.74E-06	2.74E-07	1.37E-07
I-133	4.80E-02	2.15E-04	2.15E-05	1.08E-05	4.80E-03	2.15E-05	2.15E-06	1.08E-06
I-134	1.26E-01	3.95E-06	3.95E-07	1.97E-07	1.26E-02	3.95E-07	3.95E-08	1.97E-08
I-135	9.30E-02	1.35E-04	1.35E-05	6.73E-06	9.30E-03	1.35E-05	1.35E-06	6.73E-07
LA-140	8.10E-03	6.64E-05	6.64E-06	3.32E-07	8.10E-04	6.64E-06	6.64E-07	3.32E-08
MN-54	5.10E-04	5.09E-06	5.09E-07	2.54E-08	5.10E-05	5.09E-07	5.09E-08	2.54E-09
MO-99	2.10E-03	1.59E-05	1.59E-06	7.95E-08	2.10E-04	1.59E-06	1.59E-07	7.95E-09
NA-24	1.59E-02	7.65E-10	7.65E-11	3.82E-12	1.59E-03	7.65E-11	7.65E-12	3.82E-13
NB-95	9.00E-05	9.08E-07	9.08E-08	4.54E-09	9.00E-06	9.08E-08	9.08E-09	4.54E-10

RN 03-038

Table 11.2-1 (Continued)

ISOTOPIC VALUES IN THE LIQUID WASTE PROCESSING SYSTEM[1]

Isotope	Input to Waste Holdup Tank	After Charcoal Processing	After Mixed Bed Processing	After Cation Processing	Input to FD Tank	After Charcoal Processing	After Mixed Bed Processing	After Cation Processing
	µCi/cc	µCi/cc	µCi/cc	µCi/cc	µCi/cc	µCi/cc	µCi/cc	µCi/cc
NB-95m	0.00E+00	2.16E-09	2.16E-10	1.08E-11	0.00E+00	2.16E-10	2.16E-11	1.08E-12
NP-239	7.20E-04	5.21E-06	5.21E-07	2.61E-08	7.20E-05	5.21E-07	5.21E-08	2.61E-09
PR-143	1.11E-03	1.05E-05	1.05E-06	5.24E-08	1.11E-04	1.05E-06	1.05E-07	5.24E-09
PR-144	1.47E-03	0.00E+00	0.00E+00	0.00E+00	1.47E-04	0.00E+00	0.00E+00	0.00E+00
RH-103M	2.76E-03	2.36E-05	2.36E-06	1.18E-07	2.76E-04	2.36E-06	2.36E-07	1.18E-08
RH-106	3.30E-02	0.00E+00	0.00E+00	0.00E+00	3.30E-03	0.00E+00	0.00E+00	0.00E+00
RU-103	2.40E-03	2.35E-05	2.35E-06	1.18E-07	2.40E-04	2.35E-06	2.35E-07	1.18E-08
RU-106	2.88E-02	2.87E-04	2.87E-05	1.44E-06	2.88E-03	2.87E-05	2.87E-06	1.44E-07
SR-89	4.50E-05	4.43E-07	4.43E-08	2.21E-09	4.50E-06	4.43E-08	4.43E-09	2.21E-10
SR-90	3.90E-06	3.90E-08	3.90E-09	1.95E-10	3.90E-07	3.90E-09	3.90E-10	1.95E-11
SR-91	3.30E-04	7.28E-07	7.28E-08	3.64E-09	3.30E-05	7.28E-08	7.28E-09	3.64E-10
TC-99	0.00E+00	1.86E-13	1.86E-14	9.29E-16	0.00E+00	1.86E-14	1.86E-15	9.29E-17
TC-99M	1.65E-03	1.47E-05	1.47E-06	7.33E-08	1.65E-04	1.47E-06	1.47E-07	7.33E-09
TE-129	8.70E-03	9.81E-07	9.81E-08	4.90E-09	8.70E-04	9.81E-08	9.81E-09	4.90E-10
TE-129M	6.00E-05	5.86E-07	5.86E-08	2.93E-09	6.00E-06	5.86E-08	5.86E-09	2.93E-10
TE-131	2.85E-03	7.47E-07	7.47E-08	3.74E-09	2.85E-04	7.47E-08	7.47E-09	3.74E-10
TE-131M	5.10E-04	2.85E-06	2.85E-07	1.43E-08	5.10E-05	2.85E-07	2.85E-08	1.43E-09
TE-132	5.40E-04	4.27E-06	4.27E-07	2.13E-08	5.40E-05	4.27E-07	4.27E-08	2.13E-09
W-187	8.40E-04	4.07E-06	4.07E-07	2.04E-08	8.40E-05	4.07E-07	4.07E-08	2.04E-09
Y-90	4.50E-07	3.38E-09	3.38E-10	1.69E-11	4.50E-08	3.38E-10	3.38E-11	1.69E-12
Y-91	1.65E-06	3.41E-08	3.41E-09	1.71E-10	1.65E-07	3.41E-09	3.41E-10	1.71E-11
Y-91M	1.68E-04	5.01E-07	5.01E-08	2.51E-09	1.68E-05	5.01E-08	5.01E-09	2.51E-10
Y-93	1.44E-03	3.45E-06	3.45E-07	1.73E-08	1.44E-04	3.45E-07	3.45E-08	1.73E-09
ZN-65	1.62E-04	1.61E-06	1.61E-07	8.07E-09	1.62E-05	1.61E-07	1.61E-08	8.07E-10
ZR-95	1.26E-04	1.24E-06	1.24E-07	6.22E-09	1.26E-05	1.24E-07	1.24E-08	6.22E-10

RN 03-038

Table 11.2-1 (Continued)

ISOTOPIC VALUES IN THE LIQUID WASTE PROCESSING SYSTEM[1]

Isotope	Waste Holdup Tank Ci	Floor Drain Tank Ci	Charcoal Bed (2) Ci	Mixed Bed (2) Ci	Cation (2) Ci	Waste Monitor Tank (1) Ci
AG-110M	1.27E-02	1.27E-03	2.05E-02	1.86E-04	1.86E-05	1.90E-07
BA-137M	8.54E-02	8.54E-03	1.32E-25	1.20E-27	0.00E+00	0.00E+00
BA-140	1.27E-01	1.27E-02	1.62E-01	1.48E-03	1.48E-04	1.79E-06
CE-141	1.45E-03	1.45E-04	2.15E-03	1.95E-05	1.95E-06	2.13E-08
CE-143	2.82E-02	2.82E-03	1.02E-02	9.28E-05	9.28E-06	2.48E-07
CO-58	3.91E-02	3.91E-03	6.94E-02	6.31E-04	6.31E-05	0.00E+00
CO-60	4.45E-02	4.45E-03	8.30E-03	7.54E-05	7.54E-06	6.60E-07
CR-51	5.09E-03	5.09E-04	4.36E-02	3.96E-04	3.96E-05	7.63E-08
CS-134	3.00E-02	3.00E-03	1.01E-01	1.01E-02	1.01E-03	4.37E-07
CS-136	6.81E-02	6.81E-03	9.85E-03	9.85E-04	9.85E-05	1.02E-05
CS-137	8.45E-03	8.45E-04	1.34E-01	1.34E-02	1.34E-03	1.19E-06
FE-55	8.99E-02	8.99E-03	1.92E-02	1.75E-04	1.75E-05	1.35E-05
FE-59	1.18E-02	1.18E-03	4.41E-03	4.01E-05	4.01E-06	1.77E-07
I-131	2.91E-03	2.91E-04	5.10E-01	4.64E-03	6.71E-07	4.28E-08
I-132	9.08E+00	9.08E-01	3.08E-02	2.80E-04	7.67E-06	1.36E+00
I-133	4.54E-01	4.54E-02	3.46E-01	3.15E-03	0.00E+00	6.20E-05
I-134	2.36E+00	2.36E-01	1.52E-03	1.38E-05	0.00E+00	1.24E-05
I-135	1.45E+00	1.45E-01	1.70E-01	1.55E-03	0.00E+00	9.78E-05
LA-140	3.82E+00	3.82E-01	2.30E-01	2.09E-03	2.09E-04	1.79E-06
MN-54	2.82E+00	2.82E-01	2.50E-02	2.27E-04	2.27E-05	6.11E-05
MO-99	2.45E-01	2.45E-02	4.03E-02	3.67E-04	3.67E-05	3.02E-06
NA-24	1.54E-02	1.54E-03	8.53E-08	7.75E-10	7.75E-11	2.31E-07
NB-95	6.36E-02	6.36E-03	4.59E-03	4.17E-05	4.17E-06	7.23E-07
NB-95m	4.82E-01	4.82E-02	2.87E-05	2.61E-07	2.61E-08	3.47E-11
NP-239	2.73E-03	2.73E-04	1.23E-02	1.12E-04	1.12E-05	4.12E-08
PR-143	0.00E+00	0.00E+00	4.35E-02	3.96E-04	3.96E-05	9.82E-11

RN 03-038

Table 11.2-1 (Continued)

ISOTOPIC VALUES IN THE LIQUID WASTE PROCESSING SYSTEM[1]

Isotope	Waste Holdup Tank Ci	Floor Drain Tank Ci	Charcoal Bed (2) Ci	Mixed Bed (2) Ci	Cation (2) Ci	Waste Monitor Tank (1) Ci
RH-103M	2.18E-02	2.18E-03	1.09E-01	9.95E-04	9.94E-05	2.37E-07
RU-103	3.36E-02	3.36E-03	1.09E-01	9.93E-04	9.93E-05	4.76E-07
RU-106	4.45E-02	4.45E-03	1.41E+00	1.28E-02	1.28E-03	0.00E+00
SR-89	8.36E-02	8.36E-03	2.09E-03	1.90E-05	1.90E-06	1.07E-06
SR-90	9.99E-01	9.99E-02	1.93E-04	1.75E-06	1.75E-07	0.00E+00
SR-91	7.27E-02	7.27E-03	9.97E-04	9.06E-06	9.06E-07	1.07E-06
TC-99	8.72E-01	8.72E-02	2.38E-09	2.17E-11	2.17E-12	1.31E-05
TC-99M	1.36E-03	1.36E-04	3.78E-02	3.43E-04	3.43E-05	2.01E-08
TE-129	1.18E-04	1.18E-05	9.14E-04	8.31E-06	8.31E-07	1.77E-09
TE-129M	9.99E-03	9.99E-04	2.69E-03	2.45E-05	2.45E-06	3.31E-08
TE-131	0.00E+00	0.00E+00	1.15E-03	1.05E-05	1.05E-06	8.44E-15
TE-131M	5.00E-02	5.00E-03	5.14E-03	4.67E-05	4.67E-06	6.66E-07
TE-132	2.63E-01	2.63E-02	1.17E-02	1.06E-04	1.06E-05	4.45E-08
W-187	1.82E-03	1.82E-04	6.78E-03	6.16E-05	6.16E-06	2.66E-08
Y-90	8.63E-02	8.63E-03	8.48E-06	7.71E-08	7.71E-09	3.39E-08
Y-91	1.54E-02	1.54E-03	1.80E-04	1.63E-06	1.63E-07	1.29E-07
Y-91M	1.64E-02	1.64E-03	6.87E-04	6.25E-06	6.25E-07	1.94E-07
Y-93	2.54E-02	2.54E-03	4.79E-03	4.36E-05	4.36E-06	1.85E-07
ZN-65	1.36E-05	1.36E-06	7.91E-03	7.19E-05	7.19E-06	1.54E-10
ZR-95	5.00E-05	5.00E-06	5.92E-03	5.38E-05	5.38E-06	1.55E-09

RN 03-038

(1) System modeled with first three components in Duratek processing system (Charcoal processing, mixed bed resin demineralizer and cation demineralizer). No credit taken for additional removal prior to waste monitor tank.
(2) Activity values based on 50% waste holdup tank processing and 50% floor drain tank processing.

TABLE 11.2-2

EQUIPMENT PRINCIPAL DESIGN PARAMETERS

Component		
PUMPS		
1. Reactor Coolant Drain Tank Pumps		
Number	2	
Type	Canned	
Design pressure, psig	150	
Design temperature, °F	200	02-01
Design flow, gpm		
1	100 (140) (1)	
2	100 (140) (1)	
Design head, ft		
1	300 (250) (1)	
2	300 (250) (1)	
Material	Stainless Steel	
2. Waste Evaporator Feed Pump (Used As Waste Holdup Tank Pump)		RN 03-038
Number	1	
Type	Canned	
Design pressure, psig	150	
Design temperature, °F	200	02-01
Design flow, gpm		
1	35	
2	100	
Design head, ft		
1	250	
2	200	
Material	Stainless Steel	
3. Waste Evaporator Condensate Pump		
Number	1	
Type	Canned	
Design pressure, psig	150	
Design temperature, °F	200	02-01
Design flow, gpm		
1	35	
2	100	
Design head, ft		
1	250	
2	200	
Material	Stainless Steel	

(1) Also serves as spent resin sluice pump

TABLE 11.2-2 (Continued)

EQUIPMENT PRINCIPAL DESIGN PARAMETERS

Component	
4. Chemical Drain Tank Pump	
Number	1
Type	Canned
Design pressure, psig	150
Design temperature, °F	200
Design flow, gpm	
1	35
2	100
Design head, ft	
1	250
2	200
Material	Stainless Steel
5. Spent Resin Sluice Pump	
Number	1
Type	Canned
Design pressure, psig	150
Design temperature, °F	200
Design flow, gpm	
1	140 (100) (2)
2	140 (100) (2)
Design head, ft	
1	250 (300) (2)
2	250 (300) (2)
Material	Stainless Steel
6. Laundry and Hot Shower Tank Pump	
Number	1
Type	Mechanical Seal
Design pressure, psig	150
Design temperature, °F	200
Design flow, gpm	
1	35
2	100
Design head, ft	
1	250
2	200
Material	Stainless Steel

02-01

(2) Also serves as reactor coolant drain tank pump.

TABLE 11.2-2 (Continued)

EQUIPMENT PRINCIPAL DESIGN PARAMETERS

Component		
7. Floor Drain Tank Pump		
Number	1	
Type	Mechanical Seal	
Design pressure, psig	150	
Design temperature, °F	200	
Design flow, gpm		
1	35	
2	100	02-01
Design head, ft		
1	250	
2	200	
8. Waste Monitor Tank Pumps		
Number	2	
Type	Canned	
Design pressure, psig	150	
Design temperature, °F	200	02-01
Design flow, gpm		
1	35	
2	100	
Design head, ft		
1	250	
2	200	
Material	Stainless Steel	
9. Excess Liquid Waste Pumps		
Number	2	
Type	Canned	
Design pressure, psig	150	
Design temperature, °F	200	
Design flow, gpm	35	
Design Head, ft	315	02-01

TABLE 11.2-2 (Continued)

EQUIPMENT PRINCIPAL DESIGN PARAMETERS

Component		
HEAT EXCHANGERS		
1. Reactor Coolant Drain Tank Heat Exchanger		
Number		1
Type		U-tube
Estimated UA, BTU/hr°F		70,000
Design pressure, psi,	Shell	150
	Tube	150
Design temperature, °F,	Shell	250
	Tube	200
Design flow, lb/hr,	Shell	112,000
	Tube	44,600
Temperature in, °F,	Shell	105
	Tube	180
Temperature out, °F	Shell	125
	Tube	130
Material	Shell	Carbon Steel
	Tube	Stainless Steel
TANKS		
1. Reactor Coolant Drain Tank		
Number		1
Usable volume, gallons		350
Type		Horizontal
Design pressure, psig (3)		100
Design temperature, °F		250
Material		Stainless Steel
Diaphragm		No
2. Waste Holdup Tank		
Number		1
Usable volume, gallons		10,000
Type		Vertical
Design pressure, psig		Atmosphere
Design temperature, °F		200
Material		Stainless Steel
Diaphragm		No

02-01

02-01

(3) External design pressure - 60 psig.

TABLE 11.2-2 (Continued)

EQUIPMENT PRINCIPAL DESIGN PARAMETERS

	Component	
3.	Waste Evaporator Condensate Tank	
	Number	1
	Usable volume, gallons	5,000
	Type	Vertical
	Design pressure, psig	Atmosphere
	Design temperature, °F	200
	Material	Stainless Steel
	Diaphragm	Yes
4.	Chemical Drain Tank	
	Number	1
	Usable volume, gallons	600
	Type	Vertical
	Design pressure, psig	Atmosphere
	Design temperature, °F	200
	Material	Stainless Steel
	Diaphragm	No
5.	Spent Resin Storage Tank	
	Number	1
	Usable volume, ft^3 (4)	350
	Type	Vertical
	Design pressure, psig	150
	Design temperature, °F	200
	Radiation level inside compartment, R/hr	1000
	Material	Stainless Steel
	Diaphragm	No
6.	Laundry and Hot Shower Tank	
	Number	1
	Usable volume, gallons	10,000
	Type	Vertical
	Design pressure, psig	Atmosphere
	Design temperature, °F	200
	Material	Stainless Steel
	Diaphragm	No

(4) Total for resin and liquid.

TABLE 11.2-2 (Continued)

EQUIPMENT PRINCIPAL DESIGN PARAMETERS

	Component	
7.	Floor Drain Tank	
	Number	1
	Usable volume, gallons	10,000
	Type	Vertical
	Design pressure, psig	Atmosphere
	Design temperature, °F	200
	Material	Stainless Steel
	Diaphragm	No
8.	Waste Monitor Tanks	
	Number	2
	Usable volume, gallons	5,000
	Type	Vertical
	Design pressure, psig	Atmosphere
	Design temperature, °F	200
	Material	Stainless Steel
	Diaphragm	No
9.	Waste Evaporator Reagent Tank **(No Longer In Service)**	RN 03-038
	Number	1/evaporator
	Usable volume, gallons	5
	Type	Vertical
	Design pressure, psig	150
	Design temperature, °F	200
	Material	Stainless Steel
	Diaphragm	No
10.	Excess Waste Holdup Tank	
	Number	1
	Usable volume, gallons	10,000
	Type	Vertical
	Design pressure, psig	Atmosphere
	Design temperature, °F	200
	Material	Stainless Steel
	Diaphragm	No

TABLE 11.2-2 (Continued)

EQUIPMENT PRINCIPAL DESIGN PARAMETERS

Component	
11. Decontamination Pit Collection Tank	
Number	1
Usable volume, gallons	10,000
Type	Vertical
Design pressure, psig	Atmosphere
Design temperature, °F	200
Material	Stainless Steel
Diaphragm	No
DEMINERALIZERS	
1. Waste Evaporator Condensate Demineralizer	
Number	1
Type	Flushable
Design pressure, psig	150
Design temperature, °F	200
Design flow, gpm	35
Resin volume, ft^3	NA
Material	Stainless Steel
Purification media	None
Design process decontamination factor	NA
2. Waste Monitor Tank Demineralizer	
Number	1
Type	Flushable
Design pressure, psig	150
Design temperature, °F	200
Design flow, gpm	35
Resin volume, ft^3	30
Material	Stainless Steel
Purification media	Anion and/or cation exchange resins as required
Design process decontamination factor	10

RN 03-038

TABLE 11.2-2 (Continued)

EQUIPMENT PRINCIPAL DESIGN PARAMETERS

Component		
3.	Excess Liquid Waste Demineralizers	
	Number	2
	Type	Flushable
	Design pressure, psig	150
	Design temperature, °F	200
	Design flow, gpm	35
	Resin volume, ft^3	30
	Material	Stainless Steel
	Purification media	Anion and/or cation exchange resins as required
4.	Duratek Demineralizer Vessels	
	Number	5
	Type	Flushable
	Design pressure, psig	150
	Design temperature, °F	200
	Design flow, gpm	25
	Resin volume, ft^3	19.5 to 45
	Material	Stainless Steel
	Purification media	Charcoal Bed, Mixed Bed and/or cation exchange resins as required
5.	Polishing Vessel	
	Number	1
	Type	Flushable
	Design pressure, psig	150
	Design temperature, °F	200
	Design flow, gpm	25
	Resin volume, ft^3	30
	Material	Stainless Steel
	Purification media	Mixed Bed and Cation

RN 03-038

TABLE 11.2-2 (Continued)

EQUIPMENT PRINCIPAL DESIGN PARAMETERS

Component	
FILTERS	
1. Waste Evaporator Condensate Filter	
Number	1
Design pressure, psig	150
Design temperature, °F	200
Design flow, gpm	35
ΔP at design flow, psi	≈5
Size of particles, 98% ret., microns (nominal)	≤25
Materials	
Housing	Stainless Steel
Filter element	EICF (5)
Component	
2. Spent Resin Sluice Filter	
Number	1
Design pressure, psig	150
Design temperature, °F	200
Design flow, gpm	250
ΔP at design flow, psi	≈5
Size of particles, 98% ret., microns (nominal)	≤25
Surface radiation level, R/hr	100
Materials	
Housing	Stainless Steel
Filter element	EICF (5)
3. Laundry and Hot Shower Tank Filter	
Number	1
Design pressure, psig	150
Design temperature, °F	200
Design flow, gpm	35
ΔP at design flow, psi	≈5
Size of particles, 98% ret., microns (nominal)	≤25
Surface radiation level, R/hr	100
Materials	
Housing	Stainless Steel
Filter element	EICF

RN 03-038

RN 03-038

(5) Epoxy Impregnated Cellulose Fiber or glass fiber.

RN 03-038

TABLE 11.2-2 (Continued)

EQUIPMENT PRINCIPAL DESIGN PARAMETERS

	Component	
4.	Floor Drain Tank Filter	
	Number	1
	Design pressure, psig	150
	Design temperature, °F	200
	Design flow, gpm	35
	ΔP at design flow, psi	≈5
	Size of particles, 98% ret., microns (nominal)	≤25
	Surface of radiation level, R/hr	100
	Materials	
	Housing	Stainless Steel
	Filter element	EICF
	Component	
5.	Waste Monitor Tank Filter	
	Number	1
	Design pressure, psig	150
	Design temperature, °F	200
	Design flow, gpm	35
	ΔP at design flow, psi	≈5
	Size of particles, 98% ret., microns (nominal)	≤25
	Surface radiation level, R/hr	90
	Materials	
	Housing	Stainless Steel
	Filter element	EICF
6.	Excess Liquid Waste Filters	
	Number	2
	Design pressure, psig	150
	Design temperature, °F	200
	Design flow, gpm	35
	ΔP at design flow, psi	<5
	Size of particles, 98% ret., microns (nominal)	20
	Surface radiation level, mR/hr	<100
	Materials	
	Housing	Stainless Steel
	Filter element	Stainless Steel

TABLE 11.2-2 (Continued)

EQUIPMENT PRINCIPAL DESIGN PARAMETERS

Component		
STRAINERS		
1. Laundry and Hot Shower Tank Strainer		
Number	1	
Type	Basket	
Design pressure, psig	150	
Design temperature, °F	200	
Design flow, gpm	35	
ΔP at design flow, psi	0.2 (Estimated)	02-01
Nominal rating, inch	0.0625	
Surface radiation level	Negligible	
Materials	Stainless Steel	
2. Floor Drain Tank Strainer		
Number	1	
Type	Basket	
Design pressure, psig	150	
Design temperature, °F	200	
Design flow, gpm	35	
ΔP at design flow, psi	0.2 (Estimated)	02-01
Nominal rating, inch	0.0625	
Surface radiation level	Negligible	
Materials	Stainless Steel	
3. Decontamination Pit Collection Tank Strainer		
Number	1	
Type	Duplex Basket	
Design pressure, psig	150	
Design temperature, °F	200	
Design flow, gpm	350	
Nominal rating, inch	0.015	
Material	Stainless Steel	
EVAPORATORS		
1. Waste Evaporator **(No Longer In Service)**		RN 03-038
Number	1	
Design flow, gpm	15	
Feed conc., ppm boron	10 - 2500	
Bottoms conc., ppm boron	7000 - 21,000	
Design process decontamination factor	1000	
Steam design pressure, psig	50	

TABLE 11.2-3

LIQUID WASTE PROCESSING SYSTEM MAJOR COMPONENT INVENTORIES

Isotope	Reactor Coolant Concentration at 1% Fuel Defect µCi/cc	Waste Monitor Tank Number 1 (4000 gal) Curies	Waste Monitor Tank Number 2 (4000 gal) Curies	Duratek Charcoal Demineralizer (45 cu ft) Curies	Duratek Mixed Bed Demineralizer (28 cu ft resin) Curies	Duratek Cation Demineralizer (28 cu ft) Curies	Reactor Coolant Drain Tank (280 gal) Curies	Waste Holdup Tank (8000 gal) Curies	Floor Drain Tank (8000 gal) Curies	Excess Waste Holdup Tank (10,000 gal) Curies	Decontamination Pit Collection Tank (10,000 gal) Curies
H-3	3.50E+00	5.30E+01	*	**	**	**	3.71E+00	1.06E+02	1.06E+02	***	****
AG-110M	3.00E-03	4.54E-02	*	2.66E-01	2.42E-03	2.42E-04	3.18E-03	9.08E-02	9.08E-02	***	****
BA-137M	2.00E+00	3.03E+01	*	1.08E+02	1.07E+01	1.07E+00	2.12E+00	6.06E+01	6.06E+01	***	****
BA-140	4.40E-03	6.66E-02	*	3.10E-01	2.81E-03	2.81E-04	4.66E-03	1.33E-01	1.33E-01	***	****
BR-83	8.90E-02	1.35E+00	*	4.38E-02	3.98E-04	0.00E+00	9.43E-02	2.70E+00	2.70E+00	***	****
BR-85	5.20E-03	7.87E-02	*	6.48E-23	5.89E-25	0.00E+00	5.51E-03	1.57E-01	1.57E-01	***	****
CE-141	6.90E-04	1.04E-02	*	5.62E-02	5.11E-04	5.11E-05	7.31E-04	2.09E-02	2.09E-02	***	****
CE-143	5.20E-04	7.87E-03	*	1.04E-02	9.44E-05	9.44E-06	5.51E-04	1.57E-02	1.57E-02	***	****
CE-144	4.70E-04	7.12E-03	*	0.00E+00	0.00E+00	0.00E+00	4.98E-04	1.42E-02	1.42E-02	***	****
CO-58	1.40E-02	2.12E-01	*	1.20E+00	1.09E-02	1.09E-03	1.48E-02	4.24E-01	4.24E-01	***	****
CO-60	1.30E-03	1.97E-02	*	1.17E-01	1.06E-03	1.06E-04	1.38E-03	3.94E-02	3.94E-02	***	****
CR-51	5.50E-03	8.33E-02	*	4.40E-01	4.00E-03	4.00E-04	5.83E-03	1.67E-01	1.67E-01	***	****
CS-134	4.40E+00	6.66E+01	*	3.58E+02	3.58E+01	3.58E+00	4.66E+00	1.33E+02	1.33E+02	***	****
CS-136	4.50E+00	6.81E+01	*	2.89E+02	2.89E+01	2.89E+00	4.77E+00	1.36E+02	1.36E+02	***	****
CS-137	2.10E+00	3.18E+01	*	1.72E+02	1.72E+01	1.72E+00	2.23E+00	6.36E+01	6.36E+01	***	****
FE-55	2.40E-03	3.63E-02	*	2.15E-01	1.96E-03	1.96E-04	2.54E-03	7.27E-02	7.27E-02	***	****
FE-59	5.20E-04	7.87E-03	*	4.35E-02	3.95E-04	3.95E-05	5.51E-04	1.57E-02	1.57E-02	***	****
I-130	3.30E-02	5.00E-01	*	2.50E-01	2.27E-03	0.00E+00	3.50E-02	9.99E-01	9.99E-01	***	****
I-131	3.00E+00	4.54E+01	*	1.85E+02	1.68E+00	6.93E-05	3.18E+00	9.08E+01	9.08E+01	***	****
I-132	3.10E+00	4.69E+01	*	1.30E+01	1.18E-01	7.49E-03	3.29E+00	9.39E+01	9.39E+01	***	****
I-133	4.60E+00	6.97E+01	*	6.04E+01	5.49E-01	0.00E+00	4.88E+00	1.39E+02	1.39E+02	***	****
I-134	6.00E-01	9.08E+00	*	1.32E-02	1.20E-04	0.00E+00	6.36E-01	1.82E+01	1.82E+01	***	****
I-135	2.40E+00	3.63E+01	*	7.98E+00	7.25E-02	0.00E+00	2.54E+00	7.27E+01	7.27E+01	***	****

RN 03-038

TABLE 11.2-3 (Continued)

LIQUID WASTE PROCESSING SYSTEM MAJOR COMPONENT INVENTORIES

Isotope	Reactor Coolant Concentration at 1% Fuel Defect µCi/cc	Waste Monitor Tank Number 1 (4000 gal) Curies	Waste Monitor Tank Number 2 (4000 gal) Curies	Duratek Charcoal Demineralizer (45 cu ft) Curies	Duratek Mixed Bed Demineralizer (28 cu ft resin) Curies	Duratek Cation Demineralizer (28 cu ft) Curies	Reactor Coolant Drain Tank (280 gal) Curies	Waste Holdup Tank (8000 gal) Curies	Floor Drain Tank (8000 gal) Curies	Excess Waste Holdup Tank (10,000 gal) Curies	Decontamination Pit Collection Tank (10,000 gal) Curies
LA-140	1.40E-03	2.12E-02	*	2.69E-01	2.45E-03	2.45E-04	1.48E-03	4.24E-02	4.24E-02	***	****
MN-54	4.10E-04	6.21E-03	*	3.65E-02	3.32E-04	3.32E-05	4.35E-04	1.24E-02	1.24E-02	***	****
MN-56	2.20E-02	3.33E-01	*	1.29E-02	1.17E-04	1.17E-05	2.33E-02	6.66E-01	6.66E-01	***	****
MO-99	7.90E-01	1.20E+01	*	2.76E+01	2.51E-01	2.51E-02	8.37E-01	2.39E+01	2.39E+01	***	****
NB-95	6.70E-04	1.01E-02	*	6.01E-02	5.46E-04	5.46E-05	7.10E-04	2.03E-02	2.03E-02	***	****
NB-95m	0.00E+00	0.00E+00	*	2.78E-04	2.53E-06	2.53E-07	0.00E+00	0.00E+00	0.00E+00	***	****
PR-143	6.20E-04	9.39E-03	*	4.72E-02	4.29E-04	4.29E-05	6.57E-04	1.88E-02	1.88E-02	***	****
RB-86	3.60E-02	5.45E-01	*	2.48E+00	2.48E-01	2.48E-02	3.82E-02	1.09E+00	1.09E+00	***	****
RB-89	1.80E-01	2.73E+00	*	1.76E-06	1.76E-07	1.76E-08	1.91E-01	5.45E+00	5.45E+00	***	****
RH-103M	6.90E-04	1.04E-02	*	5.30E-02	4.82E-04	4.82E-05	7.31E-04	2.09E-02	2.09E-02	***	****
RH-106	2.10E-04	3.18E-03	*	1.87E-02	1.70E-04	1.70E-05	2.23E-04	6.36E-03	6.36E-03	***	****
RU-103	6.40E-04	9.69E-03	*	5.30E-02	4.82E-04	4.82E-05	6.78E-04	1.94E-02	1.94E-02	***	****
RU-106	2.10E-04	3.18E-03	*	1.87E-02	1.70E-04	1.70E-05	2.23E-04	6.36E-03	6.36E-03	***	****
SR-89	4.00E-03	6.06E-02	*	3.40E-01	3.09E-03	3.09E-04	4.24E-03	1.21E-01	1.21E-01	***	****
SR-90	2.00E-04	3.03E-03	*	1.80E-02	1.63E-04	1.63E-05	2.12E-04	6.06E-03	6.06E-03	***	****
SR-91	5.30E-03	8.03E-02	*	3.02E-02	2.75E-04	2.75E-05	5.62E-03	1.61E-01	1.61E-01	***	****
SR-92	1.20E-03	1.82E-02	*	7.86E-04	7.15E-06	7.15E-07	1.27E-03	3.63E-02	3.63E-02	***	****
TC-99	0.00E+00	0.00E+00	*	1.69E-06	1.54E-08	1.54E-09	0.00E+00	0.00E+00	0.00E+00	***	****
TC-99M	8.40E-01	1.27E+01	*	2.65E+01	2.41E-01	2.41E-02	8.90E-01	2.54E+01	2.54E+01	***	****
TE-125M	4.70E-04	7.12E-03	*	4.00E-02	3.63E-04	3.63E-05	4.98E-04	1.42E-02	1.42E-02	***	****
TE-127	1.50E-02	2.27E-01	*	8.08E-02	7.35E-04	7.35E-05	1.59E-02	4.54E-01	4.54E-01	***	****

RN 03-038

TABLE 11.2-3 (Continued)

LIQUID WASTE PROCESSING SYSTEM MAJOR COMPONENT INVENTORIES

Isotope	Reactor Coolant Concentration at 1% Fuel Defect µCi/cc	Waste Monitor Tank Number 1 (4000 gal) Curies	Waste Monitor Tank Number 2 (4000 gal) Curies	Duratek Charcoal Demineralizer (45 cu ft) Curies	Duratek Mixed Bed Demineralizer (28 cu ft resin) Curies	Duratek Cation Demineralizer (28 cu ft) Curies	Reactor Coolant Drain Tank (280 gal) Curies	Waste Holdup Tank (8000 gal) Curies	Floor Drain Tank (8000 gal) Curies	Excess Waste Holdup Tank (10,000 gal) Curies	Decontamination Pit Collection Tank (10,000 gal) Curies
TE-127M	3.60E-03	5.45E-02	*	3.14E-01	2.86E-03	2.86E-04	3.82E-03	1.09E-01	1.09E-01	***	****
TE-129	2.00E-02	3.03E-01	*	1.19E+00	1.08E-02	1.08E-03	2.12E-02	6.06E-01	6.06E-01	***	****
TE-129M	2.10E-02	3.18E-01	*	1.73E+00	1.57E-02	1.57E-03	2.23E-02	6.36E-01	6.36E-01	***	****
TE-131	1.60E-02	2.42E-01	*	1.19E-01	1.08E-03	1.08E-04	1.70E-02	4.85E-01	4.85E-01	***	****
TE-131M	2.90E-02	4.39E-01	*	5.31E-01	4.83E-03	4.83E-04	3.07E-02	8.78E-01	8.78E-01	***	****
TE-132	2.90E-01	4.39E+00	*	1.14E+01	1.04E-01	1.04E-02	3.07E-01	8.78E+00	8.78E+00	***	****
TE-134	2.80E-02	4.24E-01	*	1.15E+01	1.05E-01	1.05E-02	2.97E-02	8.48E-01	8.48E-01	***	****
Y-90	5.70E-05	8.63E-04	*	1.31E-02	1.19E-04	1.19E-05	6.04E-05	1.73E-03	1.73E-03	***	****
Y-91	5.40E-04	8.18E-03	*	4.90E-02	4.46E-04	4.46E-05	5.72E-04	1.64E-02	1.64E-02	***	****
Y-91M	2.90E-03	4.39E-02	*	2.08E-02	1.89E-04	1.89E-05	3.07E-03	8.78E-02	8.78E-02	***	****
Y-92	1.10E-03	1.67E-02	*	3.15E-03	2.86E-05	2.86E-06	1.17E-03	3.33E-02	3.33E-02	***	****
ZR-95	6.70E-04	1.01E-02	*	5.73E-02	5.14E-04	5.21E-05	7.10E-04	2.03E-02	2.03E-02	***	****

RN 03-038

* Normal discharge path for Laundry and Hot Shower Tank – No significant activity.
** Not calculated
*** Excess Waste Holdup is not normally used. If used the estimated inventories would be similar to the Waste Holdup Tank.
**** Estimated inventories would be similar to the Floor Drain Tank.

TABLE 11.2-4

RANGE OF MEASURED DEMINERALIZER DECONTAMINATION FACTORS FOR SELECTED ISOTOPES

Isotope	Minimum	Maximum
I-131	$1.1.x\ 10^{1}$	1.6×10^{4}
I-133	1.1×10^{1}	1.8×10^{4}
I-135	1.4×10^{1}	2.0×10^{4}
Cs-137	2.4	1.3×10^{3}
F-18	1.73×10^{1}	1.5×10^{3}
Co-58	3.2×10^{1}	8.2×10^{3}
Mn-54	$> 2.5 \times 10^{1}$	$> 1.3 \times 10^{2}$

Note: Mixed bed demineralizers cation resin in lithium^{-7} form, anion resin in borated form.

TABLE 11.2-5

LIQUID WASTE PROCESSING SYSTEM INSTRUMENTATION PRINCIPAL DESIGN PARAMETERS

F- FLOW
Q - Flow Integrator
P - Pressure
L - Level
T - Temperature
R - Radiation
I - Indication
C - Control
A - Alarm

Flow Instrumentation

Channel Number	Location of Primary Sensor	Design Pressure (psig)	Design Temperature (°F)	Range *	Location of Readout
FI-1007	Waste Evaporator Feed Pump Discharge	150	200	0-30 gpm	Local
FIC-1008	Reactor Coolant Drain Tank Pump Discharge	150	250	0-250 gpm	WPS Panel
FIA-1009	Reactor Coolant Drain Tank Recirculation	150	250	0-250 gpm	WPS Panel
FICA-1011	Spent Resin Sluice Pump Discharge	150	200	1-150 gpm	WPS Panel
FI-1085A	Waste Monitor Tank Pump Number 1 Discharge	150	200	0-100 gpm	WPS Panel
FI-1085B	Waste Monitor Tank Pump Number 2 Discharge	150	200	0-100 gpm	WPS Panel
FICA-4845	Nuclear Blowdown Sluice Pump Discharge	150	200	0-250 gpm	NB Panel
Pressure Instrumentation					
PIA-1004	Reactor Coolant Drain Tank	150	250	0-30 psig	WPS Panel
PIA-1006A	Spent Resin Storage Tank	150	200	0-100 psig	WPS Panel
PIA-1006B	Spent Resin Storage Tank	150	200	0-100 psig	Solid Waste Disposal Panel

02-01

TABLE 11.2-5 (Continued)

LIQUID WASTE PROCESSING SYSTEM INSTRUMENTATION PRINCIPAL DESIGN PARAMETERS

Pressure Instrumentation

Channel Number	Location of Primary Sensor	Design Pressure (psig)	Design Temperature (°F)	Range *	Location of Readout	
PIA-4842A	Nuclear Blowdown Spent Resin Storage Tank	150	200	0-160 psig	Local	02-01
PIA-4842B	Nuclear Blowdown Spent Resin Storage Tank	150	200	0-150 psig	Solid Waste Disposal Panel	
PI-1016	Waste Evaporator Feed Pump Filter Inlet	150	200	0-160 psig	Local	
PI-1017	Waste Evaporator Feed Filter Outlet	150	200	0-160 psig	Local	
PI-1018A	Reactor Coolant Drain Tank Pump Number 1 Discharge	150	250	0-160 psig	Local	02-01
PI-1018B	Reactor Coolant Drain Tank Pump Number 2 Discharge	150	250	0-160 psig	Local	
PI-1018C	Laundry and Hot Shower Tank Pump Discharge	150	200	0-160 psig	Local	
PI-1018D	Chemical Drain Tank Pump Discharge	150	200	0-160 psig	Local	
PI-1018G	Waste Evaporator Condensate Pump Discharge	150	200	0-160 psig	Local	
PI-1074	Waste Evaporator Outlet **– NO LONGER IN SERVICE –**	150	200	0-160 psig	Local	RN 03-038
PI-1075	Waste Evaporator Condensate Demineralizer Outlet	150	200	0-160 psig	Local	

TABLE 11.2-5 (Continued)

LIQUID WASTE PROCESSING SYSTEM INSTRUMENTATION PRINCIPAL DESIGN PARAMETERS

Pressure Instrumentation

Channel Number	Location of Primary Sensor	Design Pressure (psig)	Design Temperature (°F)	Range *	Location of Readout	02-01
PI-1076	Waste Evaporator Condensate Filter Outlet	150	200	0-160 psig	Local	
PI-1078	Floor Drain Tank Filter Inlet	150	200	0-160 psig	Local	
PI-1079	Floor Drain Tank Filter Outlet	150	200	0-160 psig	Local	
PI-1080	Laundry and Hot Shower Tank Filter Inlet	150	200	0-160 psig	Local	
PI-1081	Laundry and Hot Shower Tank Filter Outlet	150	200	0-160 psig	Local	
PI-1084A	Waste Monitor Tank Pump Number 1 Discharge	150	200	0-160 psig	Local	
PI-1084B	Waste Monitor Tank Pump Number 2 Discharge	150	200	0-160 psig	Local	
PI-1086	Resin Sluice Filter Inlet	150	200	0-160 psig	Local	
PI-1087	Resin Sluice Filter Outlet	150	200	0-160 psig	Local	02-01
PI-1088	Waste Monitor Tank Filter Inlet	150	200	0-160 psig	Local	

TABLE 11.2-5 (Continued)

LIQUID WASTE PROCESSING SYSTEM INSTRUMENTATION PRINCIPAL DESIGN PARAMETERS

Pressure Instrumentation

Channel Number	Location of Primary Sensor	Design Pressure (psig)	Design Temperature (°F)	Range *	Location of Readout	
PI-1089	Waste Monitor Tank Filter Outlet	150	200	0-160 psig	Local	02-01
PI-1090	Floor Drain Tank Pump Discharge	150	200	0-160 psig	Local	
PI-7657	Waste Evaporator Concentrates Tank Pump Discharge	150	200	0-100 psig	Local	
PI-7903	Excess Liquid Waste Filter Inlet	110	100	0-160 psig	Local	
PI-7907	Excess Liquid Waste Filter Outlet	110	100	0-160 psig	Local	
PI-7911	Excess Liquid Waste Demineralizer Filter Inlet	110	100	0-160 psig	Local	
PI-7913	Excess Liquid Waste Demineralizer Filter Outlet	110	100	0-160 psig	Local	
PI-7921	Excess Waste Sump Pump A Discharge	25	100	0-60 psig	Local	02-01
PI-7923	Excess Waste Sump Pump B Discharge	25	100	0-60 psig	Local	
PI-7925	Excess Liquid Waste System Area Sump Pump Discharge	25	100	0-60 psig	Local	

TABLE 11.2-5 (Continued)

LIQUID WASTE PROCESSING SYSTEM INSTRUMENTATION PRINCIPAL DESIGN PARAMETERS

Level Instrumentation

Channel Number	Location of Primary Sensor	Design Pressure (psig)	Design Temperature (°F)	Range *	Location of Readout	
LICA-1001A and 1001B	Waste Holdup Tank	150	200	0-100%	Local & WPS Panels	02-01
LICA-1002A and 1002B	Chemical Drain Tank	150	200	0-100%	Local & WPS Panels & Solid Waste Disposal Panel	
LICA-1003	Reactor Coolant Drain Tank	150	250	0-100%	WPS Panel	
LICA-1005A and 1005B	Spent Resin Storage Tank	150	200	0-100%	WPS Panel & Solid Waste Disposal Panel	
LICA-1010A and 1010B	Laundry and Hot Shower Tank	150	200	0-100%	Local & WPS Panels	
LICA-1012A and 1012B	Waste Evaporator Condensate Tank	150	200	0-100%	Local & WPS Panels	
LICA-1077A and 1077B	Floor Drain Tank	150	200	0-100%	Local & WPS Panels	
LICA-1082A and 1082B	Waste Monitor Tank Number 1	150	200	0-100%	Local & WPS Panels	
LICA-1083A and B	Waste Monitor Tank Number 2	150	200	0-100%	Local & WPS Panels	
LICA-4843A	Nuclear Blowdown Spent Resin Storage Tank	150	200	0-100%	Solid Waste Disposal Panel	RN 04-037
LICA-4843	Nuclear Blowdown Spent Resin Storage Tank	150	200	0-72"	Nuclear Blowdown Panel	
LICA-7651A&B	Waste Evaporator Concentrates Tank	150	200	0-100%	Local & Solid Waste Disposal Panel	
LICA-7901	Excess Waste Holdup Tank	Atmosphere	100	0-100%	Local	

TABLE 11.2-5 (Continued)

LIQUID WASTE PROCESSING SYSTEM INSTRUMENTATION PRINCIPAL DESIGN PARAMETERS

Channel Number	Location of Primary Sensor	Design Pressure (psig)	Design Temperature (°F)	Range *	Location of Readout	02-01
Level Instrumentation						
LICA-7905	Decontamination Pit Collection Tank	Atmosphere	100	0-100%	Local	
Temperature Instrumentation						
TIA-1058	Reactor Coolant Drain Tank	150	250	50-250°F	WPS Panel	
TI-7655	Waste Evaporator Concentrates Tank	150	200	30-180°F	Local	
Radiation Instrumentation						
RML-5	Waste Discharge Line	150	100	10^1-10^6 cpm	WPS & Radiation Monitor Panels & Local	
RML-9	Waste Discharge Line	150	100	10^1-10^6 cpm	Radiation Monitor Panel & Local	

* Note: Use of wider range instrumentation than specified is allowed provided that the required instrument accuracy in the measured range is maintained.

TABLE 11.2-6

TANK OVERFLOW PROTECTION

Tank	System	Monitoring	Annunciation	Overflow of Collection Provisions	Processing of Overflow	02-01
Volume Control Tank	CVCS	Level Indication	High Level Alarm	Flow diverted to Recyle Holdup Tank on high level	By Recycle Holdup Tank	
Reactor Makeup Water Storage Tank	MU	Level Indication	High Level Alarm	Overflow to Drain	Via Waste Holdup Tank	
Boric Acid Tank	CVCS	Level Indication	High Level Alarm	Overflow to Drain	Via Waste Holdup Tank	
Boric Acid Batching Tank	CVCS	Level Indication		Overflow to Drain	Via Waste Holdup Tank	
Recycle Holdup Tank	BRS	Level Indication	High Level Alarm	Overflow on Floor to Drain	Via Waste Holdup Tank via Floor Sump Pump	RN 03-038
Reactor Coolant Drain Tank	LWPS	Level Indication	High Level Alarm	Overflow on Floor to Drain	Via Waste Holdup Tank via Reactor Building Sump Pump	
Waste Holdup Tank	LWPS	Level Indication	High Level Alarm	Overflow on Floor to Drain	Floor Drain Tank via Floor Sump Pump	
Floor Drain Tank	LWPS	Level Indication	High Level Alarm	Overflow on Floor to Drain	Floor Drain Tank via Floor Sump Pump	
Miscellaneous Waste Drain Tank	ND	Level Indication	High Level Alarm	Overflow on Floor to Drain	Floor Drain Tank via Floor Sump Pump	02-01
Waste Evaporator Concentrates Tank	WD	Level Indication	High Level Alarm	Overflow on Floor to Drain	Via Waste Holdup Tank	RN 03-038

TABLE 11.2-6 (Continued)

TANK OVERFLOW PROTECTION

Tank	System	Monitoring	Annunciation	Overflow of Collection Provisions	Processing of Overflow	02-01
Laundry and Hot Shower Tank	LWPS	Level Indication	High Level Alarm	Overflow on Floor to Drain	Flow Drain Tank via Floor Sump Pump	
Chemical Drain Tank	LWPS	Level Indication	High Level Alarm	Overflow on Floor to Drain	Flow Drain Tank via Floor Sump Pump	
Waste Evaporator Condensate Tank	LWPS	Level Indication	High Level Alarm	Overflow to Drain	Waste Holdup Tank via Miscellaneous Waste Holdup Tank	RN 03-038
Waste Monitor Tank	LWPS	Level Indication	High Level Alarm	Overflow to Drain	Via Floor Drain Tank	
LWPS Spent Resin Storage Tank	LWPS	Level Indication	High Level Alarm	Relief to Drain	Via Waste Holdup Tank	
Nuclear Blowdown Spent Resin Storage Tank	NB	Level Indication	High Level Alarm	Relief to Secondary Side Drain Channel	Nuclear Blowdown Holdup Tank	
Refueling Water Storage Tank	SF	Level Indication	High Level Alarm	Overflow to Drain	Via Waste Holdup Tank	RN 03-038
Excess Waste Holdup Tank	ELWS	Level Indication	High Level Alarm	Overflow to Area Sump	Via ELWS	02-01
Decontamination Pit Collection Tank	ELWS	Level Indication	High Level Alarm	Overflow to Area Sump	Via ELWS	
Nuclear Blowdown Holdup Tank	NB	Level Indication	High Level Alarm	Overflow to Secondary Side Drain	Nuclear Blowdown Holdup Tank	
Nuclear Blowdown Monitor Tank	NB	Level Indication	High Level Alarm	Overflow to Secondary Side Drain	Nuclear Blowdown Holdup Tank	RN 03-038

TABLE 11.2-6a

COMPARISON OF TANKS OUTSIDE CONTAINMENT WITH PROVISIONS OF BRANCH TECHNICAL POSITION ETSB 11-1 (Rev. 1), PARAGRAPH B.1.b

Tank	Location [1] Elevation	ETSB 11-1 (Rev. 1), Paragraph B.1.b Item No. [2]						02-01
		Item (1)		Item (2)		Items (3) and (4)		
		Monitor	Alarm	Overflow	Drain	Curb, etc.	Routed to LWS	
Miscellaneous Waste Drain Tank	AB; 374’	C	C	C	C	NC	C	
Laundry and Hot Shower Drain Tank	AB; 374’	C	C	C	C	NC	C	
Floor Drain Tank	AB; 374’	C	C	C	C	NC	C	
Waste Holdup Tank	AB; 374’	C	C	C	C	C	C	
Chemical Drain Tank	AB; 374’	C	C	C	C	NC	C	
Recycle Holdup Tank	AB; 388’	C	C	C	C	C	C	
Waste Evaporator Condensate Tank	AB; 388’	C	C	C	C	NC	C	
Waste Evaporator Concentrates Tank	AB; 412’	C	C	C	C	NC	C	
Primary Spent Resin Tank	AB; 412’	C	C	C	C	C	C	02-01
Nuclear Blowdown Spent Resin Tank	AB; 412’	C	C	C	C	C	C	

TABLE 11.2-6a (Continued)

COMPARISON OF TANKS OUTSIDE CONTAINMENT WITH PROVISIONS OF BRANCH TECHNICAL POSITION ETSB 11-1 (Rev. 1), PARAGRAPH B.1.b

Tank	Location [1] Elevation	ETSB 11-1 (Rev. 1), Paragraph B.1.b Item No. [2]						02-01
		Item (1)		Item (2)		Items (3) and (4)		
		Monitor	Alarm	Overflow	Drain	Curb, etc.	Routed to LWS	
Nuclear Blowdown Holdup Tank	AB; 436’	C	C	C	C	C	C	
Nuclear Blowdown Monitor Tank	AB; 436’	C	C	C	C	C	C	
Boric Acid Tank	AB; 463’	C	C	C	C	C	C	
Volume Control Tank	AB; 463’	C	C	C	C	C	C	
Waste Monitor Tank	AB; 463’	C	C	C	C	NC	C	
Excess Waste Holdup Tank	FB; 412’ -9”	C	C	C	C	C	C	
Decontamination Pit Collection Tank	FB; 412’ -9”	C	C	C	C	C	C	
Refueling Water Storage Tank	YD; 412’	C	C	C	C	C	C	02-01
Reactor Makeup Water Tank	YD; 412’	C	C	C	C	C	C	
Condensate Storage Tank	YD; Grade	C	C	NC	NC	NC	NC	

TABLE 11.2-6a (Continued) 02-01

COMPARISON OF TANKS OUTSIDE CONTAINMENT WITH PROVISIONS OF BRANCH TECHNICAL POSITION ETSB 11-1 (Rev. 1), PARAGRAPH B.1.b

Notes:

1. Location

   AB - Auxiliary Building
   FB - Fuel Handling Building
   YD - Yard; refueling water storage and reactor makeup water tanks are in an outdoor extension of the Auxiliary Building

2. C - Conforms to ETSB 11-1 (Rev. 1)
   NC - Does not conform to ETSB 11-1 (Rev. 1) 02-01

Table 11.2-7

PARAMETERS USED IN THE CALCULATION OF ESTIMATED ACTIVITY IN LIQUID WASTES [1]

Collector Tank With Sources	Volume of Liquid Waste	Collection Period Assumed Before Processing	Comments
Reactor Coolant Drain Tank Waste Holdup Tank [1]			
1. Shim Bleeds	500 gal/day		
2. Equipment drains	100 gal/day		
3. WHT inputs	75 gal/day		
Total	675 gal/day	6.0 days	Discharged
Floor Drain Tank [1]			
1. FDT inputs	450 gal/day	8.8 days	Discharged
Total	410,100 gal/yr		

RN 03-038

[1] This table does not represent system capacity. The estimated waste processing system capacity based on indefinite operation for liquids collected in the floor drain tank and waste holdup tank is 25 gpm or approximately 12,500,000 gal/yr.

TABLE 11.2-8
(Sheet 1)

PWR-GALE CODE INPUT PARAMETERS USED IN CALCULATING RELEASES OF RADIOACTIVE MATERIALS IN LIQUID EFFLUENTS 02-01

Reactor Power Level, MWt	2900	
Primary System		
Mass of Primary Coolant, thousand lbs	377.9	
Average Letdown Rate, gpm	105	
Average Letdown Cation Demineralizer Flow Rate, gpm	10.5	
Secondary System		
Steam Flow Rate, million lbs/hr	12.85	RN 03-038
Mass of Steam/Steam Generator, thousand lbs	7.407	
Mass of Liquid/Steam Generator, thousand lbs	109	
Mass of Secondary Coolant, thousand lbs	2220	
Steam Generator Blowdown Rate, thousand lbs/hr	45	
Steam Generator Blowdown Treatment Option	See Section 11.2.6.4.3	02-01

TABLE 11.2-8 (Continued)
(Sheet 2)

PWR-GALE CODE INPUT PARAMETERS USED IN CALCULATING RELEASES OF RADIOACTIVE MATERIALS IN LIQUID EFFLUENTS 02-01

Stream	Flow Rate (gal/day)	Fraction of Primar Coolant Activity	Fraction Discharged	Collection Time (days)	Decay Time (days)	Decontamination Factors I	Decontamination Factors Cs	Decontamination Factors Others
Shim Bleed	1.45×10^3	NA	1.0	2.08	0.11	1×10^2	2×10^1	1×10^3
Equipment Drains	3.00×10^2	1.00	1.0	2.08	0.11	1×10^2	2×10^1	1×10^3
Clean Wastes	2.00×10^2	1.00	1.0	2.08	0.11	1×10^2	2×10^1	1×10^3
Dirty Wastes	1.34×10^3	0.05	1.0	2.97	0.11	1×10^3	2×10^2	1×10^3
Blowdown	_ (2)	_ (1)	1.0	0.01	0	1×10^3	1×10^2	1×10^3
Detergent Wastes	_ (1)	_ (1)	1.0	NA (3)	NA	NA	NA	NA

RN 03-038

(1) Calculated by PWR-GALE Code. 02-01
(2) Value given on Sheet I, Table 11.2-8.
(3) Not Applicable.

TABLE 11.2-12
LIQUID EFFLUENTS ANNUAL RELEASES

NUCLIDE	HALF-LIFE (DAYS)	COOLANT CONCENTRATIONS PRIMARY (MICRO CI/ML)	SECONDARY (MICROCI/ML)	EQUIP. DRAIN (CURIES)	MISC. WASTES (CURIES)	SECONDARY (CURIES)	TURB BLDG (CURIES)	TOTAL LWS (CURIES)	ADJUSTED TOTAL (CI/YR)	DETERGENT WASTES (CI/YR)	TOTAL (CI/YR)
CORROSION AND ACTIVATION PRODUCTS											
CR 51	2.78E+01	1.15E-03	1.01E-07	.00069	.00041	.00000	.00000	.00110	.00112	.00000	.00110
MN 54	3.03E+02	1.86E-04	2.41E-08	.00011	.00007	.00000	.00000	.00018	.00019	.00000	.00019
FE 55	9.50E+02	9.61E-04	8.41E-08	.00059	.00035	.00000	.00000	.00095	.00097	.00000	.00097
FE 59	4.50E+01	6.04E-04	6.19E-08	.00036	.00022	.00000	.00000	.00058	.00060	.00000	.00060
CO 58	7.13E+01	9.64E-03	8.57E-07	.00586	.00351	.00000	.00001	.00938	.00959	.00000	.00960
CO 60	1.92E+03	1.20E-03	1.08E-07	.00074	.00044	.00000	.00000	.00118	.00121	.00000	.00120
NP239	2.35E+00	7.88E-04	5.84E-08	.00035	.00020	.00000	.00000	.00056	.00057	.00000	.00057
FISSION PRODUCTS											
BR 83	1.00E-01	5.02E-03	1.56E-07	.00101	.00046	.00000	.00000	.00147	.00151	.00000	.00150
BR 84	2.21E-02	3.08E-03	2.99E-08	.00001	.00000	.00000	.00000	.00001	.00001	.00000	.00001
RB 86	1.87E+01	5.23E-05	5.28E-09	.00355	.00072	.00000	.00000	.00426	.00436	.00000	.00440
RB 88	1.24E-02	2.44E-01	1.28E-06	.00031	.00006	.00000	.00000	.00037	.00038	.00000	.00038
SR 89	5.20E+01	2.11E-04	2.47E-08	.00013	.00008	.00000	.00000	.00020	.00021	.00000	.00021
SR 91	4.03E-01	5.41E-04	3.00E-08	.00007	.00004	.00000	.00000	.00012	.00012	.00000	.00012
Y 91M	3.47E-02	4.16E-04	4.19E-08	.00005	.00003	.00000	.00000	.00008	.00008	.00000	.00008
Y 91	5.88E+01	3.86E-05	3.69E-09	.00003	.00002	.00000	.00000	.00004	.00004	.00000	.00004
ZR 95	6.50E+01	3.62E-05	3.68E-09	.00002	.00001	.00000	.00000	.00004	.00004	.00000	.00004
NB 95	3.50E+01	3.02E-05	3.75E-09	.00002	.00001	.00000	.00000	.00003	.00003	.00000	.00003
MO 99	2.79E+00	5.45E-02	5.49E-06	.02547	.01492	.00000	.00005	.04044	.04136	.00000	.04100
TC 99M	2.50E-01	4.35E-02	2.00E-05	.02367	.01409	.00000	.00012	.03788	.03874	.00000	.03900
RU103	3.96E+01	2.72E-05	2.49E-09	.00002	.00001	.00000	.00000	.00003	.00003	.00000	.00003
RH103M	3.96E-02	5.16E-05	2.72E-08	.00002	.00001	.00000	.00000	.00003	.00003	.00000	.00003
TE125M	5.80E+01	1.75E-05	1.11E-09	.00001	.00001	.00000	.00000	.00002	.00002	.00000	.00002
TE127M	1.09E+02	1.68E-04	1.09E-08	.00010	.00006	.00000	.00000	.00016	.00017	.00000	.00017
TE127	3.92E-01	7.11E-04	1.02E-07	.00017	.00010	.00000	.00000	.00028	.00028	.00000	.00028
TE129M	3.40E+01	8.46E-04	7.51E-08	.00051	.00030	.00000	.00000	.00081	.00083	.00000	.00083
TE129	4.79E-02	1.81E-03	7.83E-07	.00033	.00020	.00000	.00000	.00053	.00055	.00000	.00055
I130	5.17E-01	1.68E-03	1.08E-07	.00299	.00138	.00000	.00001	.00438	.00448	.00000	.00450
TE131M	1.25E+00	1.75E-03	1.29E-07	.00060	.00034	.00000	.00000	.00095	.00097	.00000	.00097
TE131	1.74E-02	1.32E-03	7.67E-07	.00011	.00006	.00000	.00000	.00017	.00018	.00000	.00018
I131	8.05E+00	1.67E-01	1.56E-05	.93165	.43224	.00000	.00152	1.36541	1.39624	.00000	1.40000
TE132	3.25E+00	1.73E-02	1.39E-06	.00842	.00494	.00000	.00001	.01337	.01367	.00000	.01400
I132	9.58E-02	1.05E-01	1.16E-05	.06297	.02969	.00000	.00020	.09286	.09496	.00000	.09500
I133	8.75E-01	2.79E-01	2.04E-05	.77052	.35541	.00000	.00166	1.12759	1.15305	.00000	1.20000
I134	3.67E-02	5.42E-02	7.88E-07	.00106	.00049	.00000	.00000	.00155	.00158	.00000	.00160
CS134	7.49E+02	1.51E-02	1.46E-06	1.06596	.21496	.00000	.00001	1.28093	1.30985	.00000	1.30000
I135	2.79E-01	1.69E-01	8.77E-06	.15241	.07011	.00000	.00047	.22299	.22803	.00000	.23000
CS136	1.30E+01	8.06E-03	6.84E-07	.53751	.10831	.00000	.00001	.64583	.66041	.00000	.66000
CS137	1.10E+04	1.08E-02	9.71E-07	.76787	.15485	.00000	.00001	.92272	.94356	.00000	.94000
BA137M	1.77E-03	1.98E-02	1.35E-05	.71796	.14478	.00000	.00001	.86275	.88223	.00000	.88000
BA140	1.28E+01	1.35E-04	1.20E-08	.00008	.00005	.00000	.00000	.00012	.00013	.00000	.00013
LA140	1.67E+00	1.02E-04	1.79E-08	.00007	.00004	.00000	.00000	.00011	.00011	.00000	.00011
CE141	3.24E+01	4.23E-05	3.76E-09	.00003	.00002	.00000	.00000	.00004	.00004	.00000	.00004
CE143	1.38E+00	2.77E-05	2.21E-09	.00001	.00001	.00000	.00000	.00002	.00002	.00000	.00002
PR143	1.37E+01	3.05E-05	2.66E-09	.00002	.00001	.00000	.00000	.00003	.00003	.00000	.00003
CE144	2.84E+02	1.98E-05	2.41E-09	.00001	.00001	.00000	.00000	.00002	.00002	.00000	.00002
PR144	1.20E-02	3.99E-05	3.17E-08	.00001	.00001	.00000	.00000	.00002	.00002	.00000	.00002
ALL OTHERS		4.24E-04	1.24E-08	.00002	.00001	.00000	.00000	.00003	.00003	.00000	.00003
TOTAL (EXCEPT TRITIUM)		1.22E+00	1.06E-04	5.08446	1.55406	.00000	.00411	6.64263	6.79263	.00000	6.80000

TRITIUM RELEASE 580 CURIES PER YEAR

RN 03-038

TABLE 11.2-13

COMPARISON OF RADIONUCLIDE CONCENTRATIONS IN LIQUID EFFLUENTS TO THE LIMITS OF 10 CFR 20

Isotope	Annual Release Ci/yr	Expected Site Boundary Concentration μCi/cc	Effluent Concentration Limit - ECL [1] μCi/cc	Ratio of Expected Concentration to ECL
CR 51	1.1E-03	2.2E-13	5.0E-04	4.4E-10
MN 54	1.9E-04	3.8E-14	3.0E-05	1.3E-09
FE 55	9.7E-04	1.9E-13	1.0E-04	1.9E-09
FE 59	6.0E-04	1.2E-13	1.0E-05	1.2E-08
CO 58	9.6E-03	1.9E-12	2.0E-05	9.6E-08
CO 60	1.2E-03	2.4E-13	3.0E-06	8.0E-08
NP239	5.7E-04	1.1E-13	2.0E-05	5.7E-09
BR 83	1.5E-03	3.0E-13	9.0E-04	3.3E-10
BR 84	1.0E-05	2.0E-15	4.0E-04	5.0E-12
RB 86	4.4E-03	8.8E-13	7.0E-06	1.3E-07
RB 88	3.8E-04	7.6E-14	4.0E-04	1.9E-10
SR 89	2.1E-04	4.2E-14	8.0E-06	5.3E-09
SR 91	1.2E-04	2.4E-14	2.0E-05	1.2E-09
Y 91M	8.0E-05	1.6E-14	2.0E-03	8.0E-12
Y 91	4.0E-05	8.0E-15	8.0E-06	1.0E-09
ZR 95	4.0E-05	8.0E-15	2.0E-05	4.0E-10
NB 95	3.0E-05	6.0E-15	3.0E-05	2.0E-10
MO 99	4.1E-02	8.2E-12	2.0E-05	4.1E-07
TC 99M	3.9E-02	7.8E-12	1.0E-03	7.8E-09
RU103	3.0E-05	6.0E-15	3.0E-05	2.0E-10
RH103M	3.0E-05	6.0E-15	6.0E-03	1.0E-12
TE125M	2.0E-05	4.0E-15	2.0E-05	2.0E-10
TE127M	1.7E-04	3.4E-14	9.0E-06	3.8E-09
TE127	2.8E-04	5.6E-14	1.0E-04	5.6E-10
TE129M	8.3E-04	1.7E-13	7.0E-06	2.4E-08
TE129	5.5E-04	1.1E-13	4.0E-04	2.8E-10
I130	4.5E-03	9.0E-13	2.0E-05	4.5E-08
TE131M	9.7E-04	1.9E-13	8.0E-06	2.4E-08
TE131	1.8E-04	3.6E-14	8.0E-05	4.5E-10
I131	1.4E+00	2.8E-10	1.0E-05	2.8E-05
TE132	1.4E-02	2.8E-12	9.0E-06	3.1E-07
I132	9.5E-02	1.9E-11	1.0E-04	1.9E-07
I133	1.2E+00	2.4E-10	7.0E-06	3.4E-05
I134	1.6E-03	3.2E-13	4.0E-04	8.0E-10
CS134	1.3E+00	2.6E-10	9.0E-07	2.9E-04
I135	2.3E-01	4.6E-11	3.0E-05	1.5E-06
CS136	6.6E-01	1.3E-10	6.0E-06	2.2E-05
CS137	9.4E-01	1.9E-10	1.0E-06	1.9E-04
BA140	1.3E-04	2.6E-14	8.0E-06	3.3E-09
LA140	1.1E-04	2.2E-14	9.0E-06	2.4E-09
CE141	4.0E-05	8.0E-15	3.0E-05	2.7E-10
CE143	2.0E-05	4.0E-15	2.0E-05	2.0E-10
PR143	3.0E-05	6.0E-15	7.0E-05	8.6E-11
CE144	2.0E-05	4.0E-15	3.0E-06	1.3E-09
PR144	2.0E-05	4.0E-15	2.0E-05	2.0E-10
ALL OTH	3.0E-05	6.0E-15	1.0E-08	6.0E-07
H-3	5.8E+02	1.2E-07	1.0E-03	1.2E-04
			TOTAL	6.8E-04

RN 03-038

[1] FROM 10CFR20, APPENDIX B, TABLE 2, COLUMN 2.

TABLE 11.2-14

SUMMARY OF CALCULATED LIQUID PATHWAY DOSES
VIRGIL C. SUMMER NUCLEAR STATION

Pathway	Location	Age Group	Organ Receiving Maximum Dose: Dose Organ	Organ Receiving Maximum Dose: Dose (mrem/yr)	Total Body Dose (mrem/yr)
Drinking Water	Columbia Water Supply System	Adult	Liver	6.1E-2	4.6E-2
		Teen	Liver	5.6E-2	2.5E-2
		Child	Liver	1.1E-1	2.6E-2
		Infant	Liver	1.4E-1	1.8E-2
Fish Ingestion	Parr/Monticello System	Adult	Liver	3.2E+0	2.4E+0
		Teen	Liver	3.3E+0	1.4E+0
		Child	Liver	2.9E+0	5.2E-1
Shoreline Activity	Parr/Monticello System	Adult	Skin	1.5E-1	1.3E-1
		Teen	Skin	2.0E-2	1.7E-2
		Child	Skin	4.1E-3	3.5E-3
Swimming	Parr/Monticello System	Adult	Total Body	1.2E-4	1.2E-4
Boating	Parr/Monticello System	Adult	Total Body	3.0E-4	3.0E-4

RN 03-038

TABLE 11.2-15

APPENDIX I CONFORMANCE SUMMARY TABLE
VIRGIL C. SUMMER NUCLEAR STATION
LIQUID EFFLUENTS

	Appendix I Criteria		Virgil C. Summer Nuclear Station		
Type of Dose	Design Objective (1)	Point of Dose Evaluation	Calculated Dose	Point of Dose Evaluation (6)	02-01
Liquid Effluents					
Dose to total body from all pathways	5 mrem/yr per site	Location of the highest dose offsite (2)	2,54 mrem/yr (3)	Parr/Monticello (4) Reservoir System	RN 03-038
Dose to any organ from all pathways	5 mrem/yr per site	Same as above	3.41 mrem/yr (5)	Parr/Monticello (4) Reservoir System	

(1) Design objectives as specified in the Commission's Appendix I Conformance Option, 40 FR 40816, September 4, 1975.

(2) Evaluated at a location that is anticipated to be occupied during plant lifetime or evaluated with respect to such potential land and water usage and food pathways as could actually exist during the term of plant operation.

(3) Dose to adult.

(4) Fish were assumed to be exposed to average radionuclide concentrations in the Parr/Monticello Reservoir System. RN 03-038

(5) Dose to teen liver.

(6) Points given correspond to points of does evaluation under Appendix I heading.

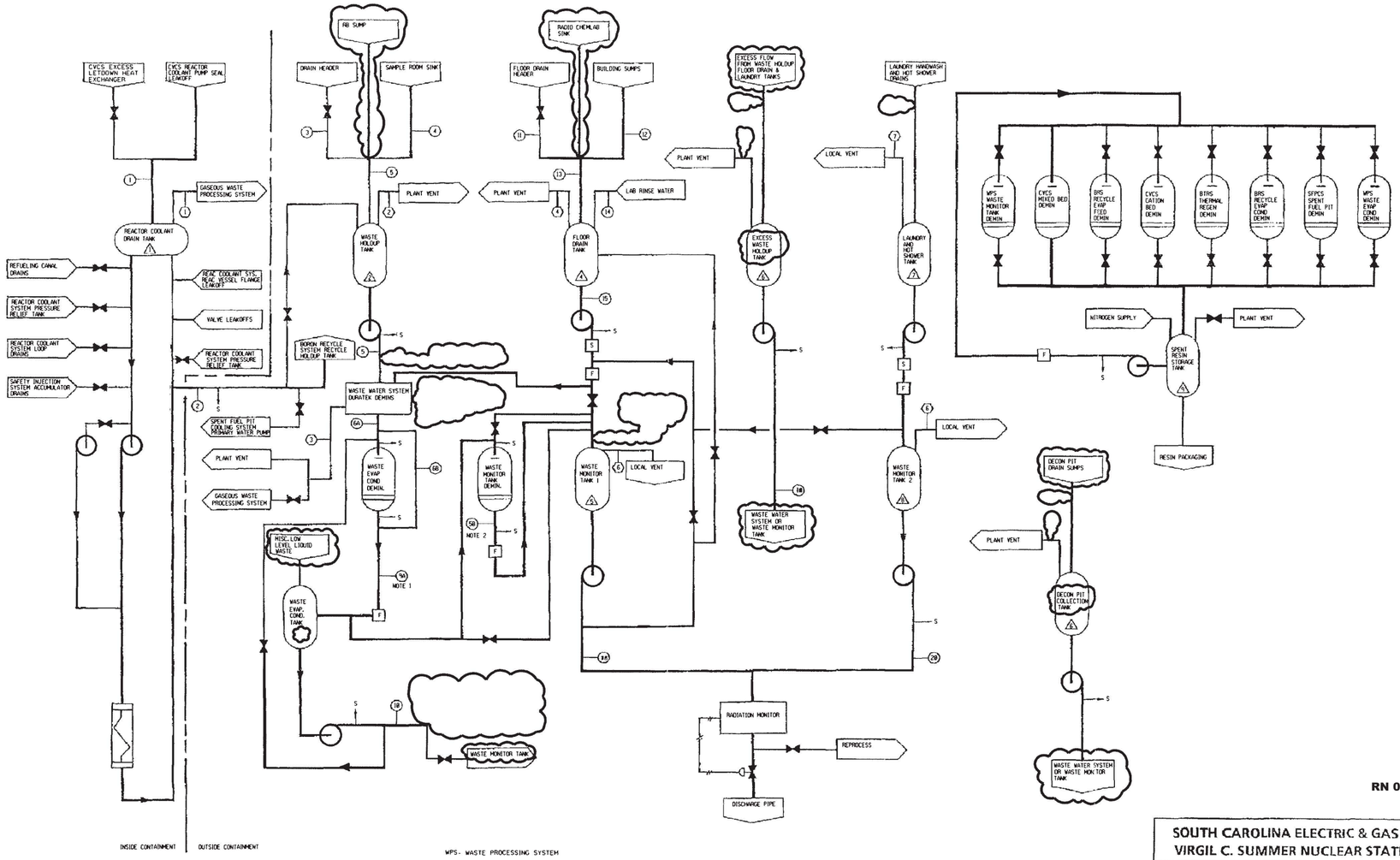

WPS - WASTE PROCESSING SYSTEM
CVCS - CHEMICAL AND VOLUME CONTROL SYSTEM
BRS - BORON RECYCLE SYSTEM
BTRS - BORON THERMAL REGENERATION SYSTEM
SFPCS - SPENT FUEL PIT COOLING SYSTEM
S - SAMPLE POINT
S - STRAINER
F - FILTER

RN 03-038

SOUTH CAROLINA ELECTRIC & GAS CO.
VIRGIL C. SUMMER NUCLEAR STATION

Liquid Waste Processing System
Process Flow Diagram

Figure 11.2-1 REV. 1

fsar_11.2-1.dgn

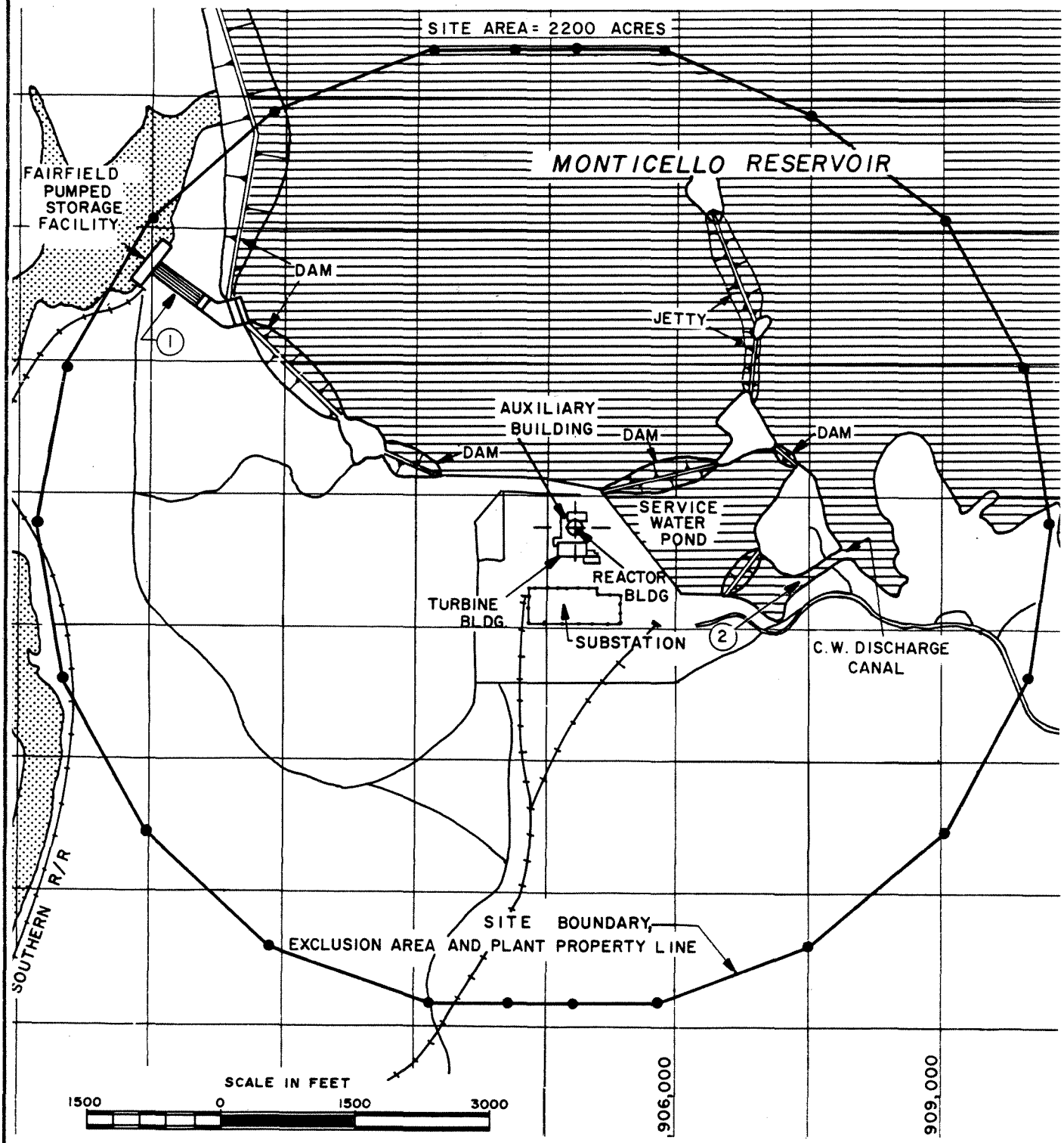

Amendment 0
August 1984

LIQUID RELEASES:

(1) FAIRFIELD PUMPED STORAGE FACILITY PENSTOCKS
(A) LIQUID WASTE PROCESSING SYSTEM
(B) PROCESSED STEAM GENERATOR BLOWDOWN

(2) CIRULATING WATER DISCHARGE CANAL
(A) UNPROCESSED STEAM GENERATOR BLOWDOWN
(B) TURBINE BUILDING FLOOR DRAINS

SOUTH CAROLINA ELECTRIC & GAS CO.
VIRGIL C. SUMMER NUCLEAR STATION

Location of Liquid Release Points

Figure 11.2-3

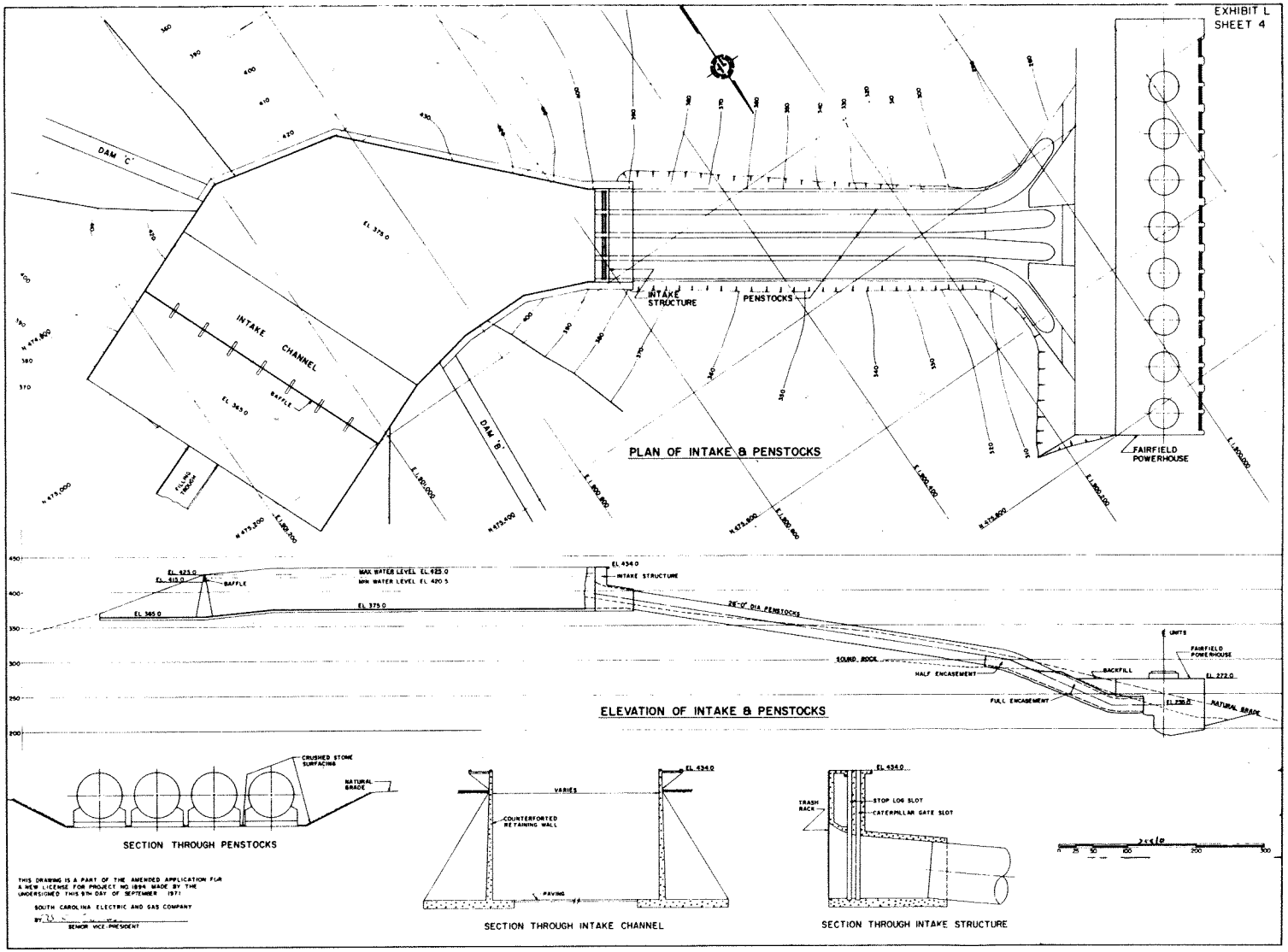

Amendment 0
August 1984

SOUTH CAROLINA ELECTRIC & GAS CO.
VIRGIL C. SUMMER NUCLEAR STATION

Fairfield Pumped Storage Facility

Figure 11.2-4

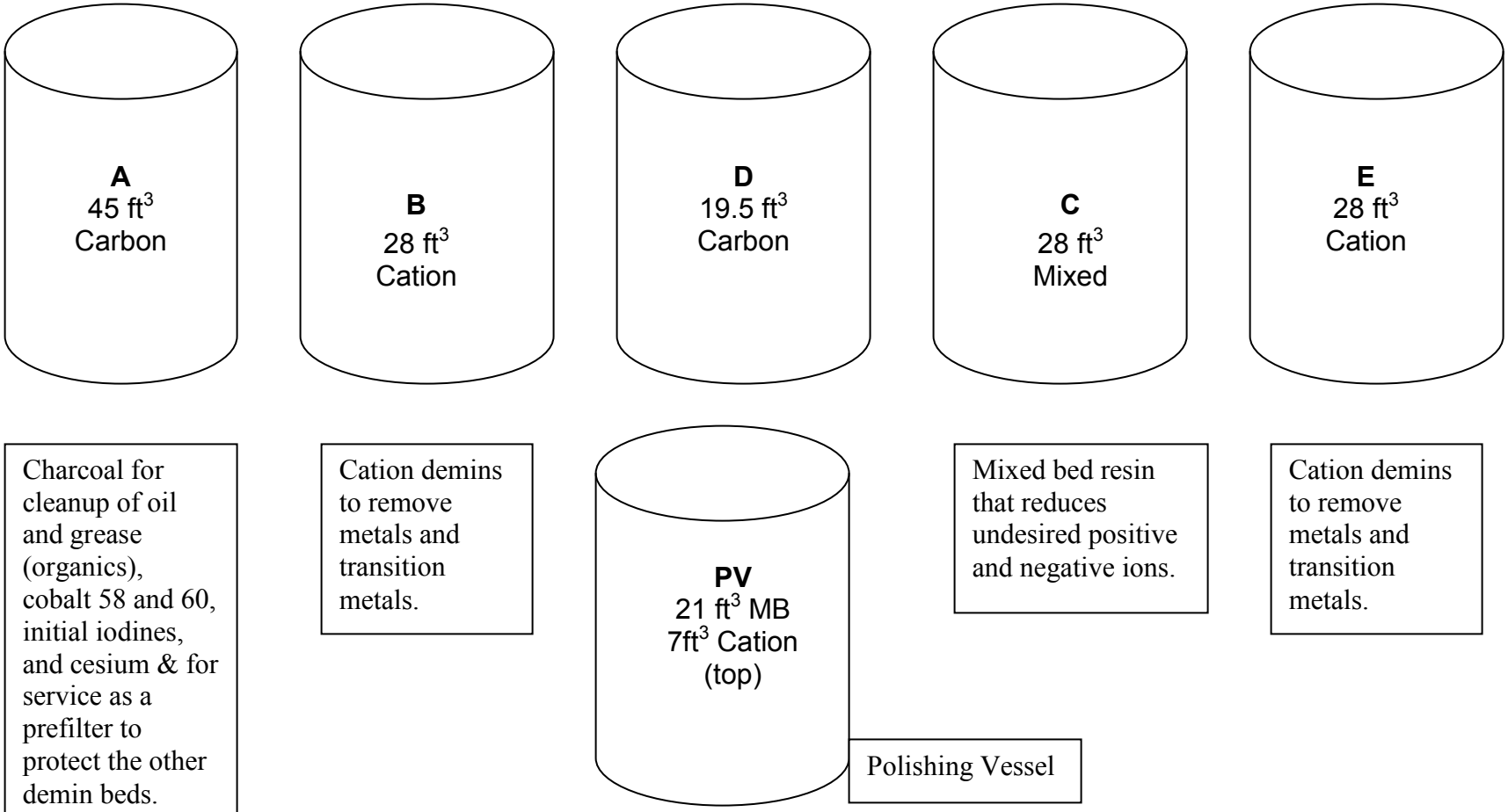

Typical Line Up

A B D C E PV

RN 03-038

SOUTH CAROLINA ELECTRIC & GAS CO.
VIRGIL C. SUMMER NUCLER STATION

Duratek System Typical Lineup

FSAR Figure 11.2-5

11.3 GASEOUS WASTE SYSTEM

11.3.1 DESIGN OBJECTIVES

The Gaseous Waste Processing System (GWPS) is designed to remove fission product gases from the reactor coolant in the volume control tank. The system is also designed to collect gases from the boron recycle and waste evaporators, reactor coolant drain tank, recycle holdup tanks, and reactor vessel. The system has the capacity for long term storage.

Under normal operation the annual releases due to leakage and routine releases from the GWPS will be sufficiently low such that site boundary doses will be a small fraction of regulation requirements.

The system is capable of operating under conditions of fuel defects in combination with equipment faults of moderate frequency.

The system is designed to preclude the possibility of an internal explosion. However, the system volume is distributed so that the dose in the unlikely event of an explosion is approximately the same as the dose due to a gas decay tank rupture as analyzed in Section 15.3.5.

11.3.2 SYSTEM DESCRIPTION

The GWPS consists mainly of a closed loop comprised of 2 waste gas compressors, 2 catalytic hydrogen recombiners, and gas decay tanks to accumulate the fission product gases. The routing of piping containing radioactive gases is either through shielded cubicles or behind shield slabs.

NOTE:

The following paragraph is being retained for historical purposes only.

Components of a similar design to those used in the GWPS have been operating for several years with excellent performance. Systems constructed from carbon steel have been in service for more than 3 years and no failure due to corrosion damage has been reported. 00-01

The major input to the GWPS during normal operation is taken from the gas space in the volume control tank.

Table 11.3-1, based on the Reactor Coolant System activities given in Table 11.1-2, shows the maximum fission product inventory in the GWPS over the 40 year plant life. Table 11.3-2, based on the Reactor Coolant System activities given in Table 11.1-5, shows the expected fission product inventory in the GWPS over the 40 year life.

Figure 11.3-1 based on the reactor coolant activities given in Table 11.1-2 shows that for a given power rating with 1% fuel defects, the quantity of fission gas activity accumulated after 40 years continuous operation is about twice the activity accumulated after short term operation. Figure 11.3-2 based on realistic reactor coolant activities given in Table 11.1-5 shows that the quantity of fission gas activity accumulated after 40 years continuous operation is essentially Krypton-85 with the short lived isotopes contributing approximately 12% of the total. This is because the accumulated activity other than Krypton-85 arises from short lived isotopes which reach equilibrium after a short operating period.

RN 02-025

This accumulation of Krypton-85 is not a hazard to the plant operator because:

1. Radiation background levels in the plant are not noticeably affected by the accumulation of Krypton-85 which is a beta emitter, for which the tanks themselves provide adequate shielding.

2. The system activity inventory is distributed in several tanks so that the maximum permissible inventory in any single tank is actually less than that of earlier GWPS designs.

Since this system permits fission gas removal from the reactor coolant during normal operation, it is expected to reduce plant activity levels caused by a leakage of reactor coolant. With operation of this system, it is possible to collect virtually all of the Krypton-85 released to the Reactor coolant and to achieve a reduction in the fission product gas inventory in the Reactor Coolant System as shown in Table 11.3-3. Table 11.3-3 is based on the Reactor Coolant System activities given in Table 11.1-1. Provisions are made to collect any residual gases stripped out of solution by the boron recycle and waste evaporators, gases from the reactor coolant drain tank, gases from the recycle holdup tanks, and gases from the reactor vessel.

Process flow diagrams and piping and instrumentation diagrams are shown on Figures 11.3-3 and 11.3-4, respectively. Table 11.3-4 gives process parameters for key locations in the system, with reference to locations on Figure 11.3-3 and based on the Reactor Coolant System activities given in Table 11.1-5.

The process parameters are derived assuming the system to operate as described in Section 11.3.4. The stripping efficiency used in the analysis is 0.4, and the volume control tank purge rate is 0.7 scfm of hydrogen.

11.3.3 SYSTEM DESIGN

11.3.3.1 Component Design

Gaseous waste processing equipment parameters are given in Table 11.3-5. Component safety classes and the corresponding code and code class are shown in Table 3.2-1. All materials used for pressure retaining components are allowed by Section III of the ASME Code, and no malleable wrought or cast iron or plastic pipe is used.

Quality assurance requirements of Westinghouse Administrative Specifications for the Procurement of Nuclear Steam Supply System Components, Revision 5, March 1975 are applied to all NNS components within Westinghouse scope. Hence, all components within Westinghouse scope meet the design guidance as outlined in Branch Technical Position ETSB 11-1.

11.3.3.1.1 Waste Gas Compressor Packages

Two (2) waste gas compressor packages are provided to circulate gases around the system loop. One (1) unit is normally used with the other on a standby basis.

The units are water-sealed centrifugal displacement machines which are skid-mounted in a self-contained package. Construction is primarily of carbon steel. Mechanical seals are provided to minimize the out-leakage of seal water.

11.3.3.1.2 Catalytic Hydrogen Recombiner Packages

Two (2) catalytic hydrogen recombiners are provided. One (1) of the 2 recombiners is normally used to remove hydrogen from the hydrogen-nitrogen-fission gas mixtures by oxidation to water vapor, which is removed by condensation. The other recombiner is available on a standby basis. Both units are self-contained and designed for continuous operation. The recombiner is located in the system where the hydrogen concentration and pressure are optimum with respect to hydrogen removal.

11.3.3.1.3 Waste Gas Decay Tanks

Waste gas decay tanks are provided as described in Table 11.3-5. The tanks are of vertical-cylindrical type and are constructed of carbon steel. There are 8 waste gas decay tanks, 6 are used during normal operation while the remaining 2 are used for shutdown and startup.

11.3.3.1.4 Valves

Each valve in the recombiner system is designed to meet the temperature, pressure, and code requirements for the specific application in which it is used. The recombiner circuits contain manual valves provided with a metal diaphragm to prevent stem leakage and control valves with gaseous leakoffs returned to the GWPS. Other parts of the GWPS use control valves with bellows seal. Relief valves have soft seats and operate at pressures which are normally less than 2/3 of the relief valve set pressure. The relief valves of the major components discharge to the shutdown tanks. This permits decay and controlled disposal of all discharges less than about 3000 scf. It also provides a means for containing and detecting seat leakage across the relief valves.

11.3.3.2 Instrumentation and Control Design

The main system instrumentation is described in Table 11.3-6 and shown on the piping and instrumentation diagrams, Figure 11.3-4.

The instrumentation readout is located mainly on the Waste Processing System (WPS) panel in the Auxiliary Building. Some instruments are read near the equipment location.

All alarms are shown separately on the WPS panel and further relayed to 1 common WPS annunciator on the main control board.

Where suitable, instrument lines are provided with diaphragm seals to prevent fission gas outleakage through the instrument.

Figure 11.3-5 shows the location of the instruments on the compressor package.

The compressors are interlocked with the seal water inventory in the moisture separators and trip off on either a high or a low moisture separator level. During normal operation the proper seal water inventory is maintained automatically.

Figure 11.3-6 indicates the location of the instruments on the recombiner installation.

The catalytic hydrogen recombiner packages are designed for automatic operation with a minimum of operator attention. Each package includes 4 online gas analyzers, 1 each to measure hydrogen in, oxygen in, hydrogen out, and oxygen out, which are the primary means of recombiner control. A multipoint temperature recorder monitors temperatures at several locations in the packages.

Process gas flowrate is measured by an orifice located upstream of the recombiner preheater. Local pressure gauges indicate pressure at the recombiner inlet and the oxygen supply pressure.

The following controls and alarms are incorporated to maintain the gas composition outside the range of flammable and explosive mixtures:

1. A high flow alarm actuates when the volume control tank purge flow exceeds a predetermined value. This high flow alarm is set below the flow which corresponds to the maximum inlet concentration (6% hydrogen by volume) the recombiner can process in one pass. 02-01

2. If the hydrogen concentration in the recombiner feed exceeds 4% by volume, a high hydrogen and high-high hydrogen/oxygen shutdown alarm sounds, the oxygen feed is terminated through TCV01114, and the volume control tank hydrogen purge flow is terminated. The control and alarm setpoints were lowered to a identical setpoint of 4% by volume to limit the possible accumulation of hydrogen in the system to 4% by volume for compliance with Technical Specifications.

3. If the oxygen concentration in the recombiner feed reaches 2% by volume, a high oxygen and high-high oxygen/shutdown alarm sounds, oxygen feed flow is limited through HCV01118, and the oxygen feed is terminated through TCV01114. The control and alarm setpoints were lowered to a identical setpoint of 2% by volume which is below the flammable limit for hydrogen-oxygen mixtures for Technical Specifications compliance.

4. If hydrogen in the recombiner discharge exceeds 0.15% by volume, an alarm sounds. This alarm warns of high hydrogen feed, possible hydrogen-oxygen catalytic reactor malfunction, or loss of oxygen feed. 98-01

5. If oxygen in the recombiner discharge exceeds 60 ppm an alarm sounds and oxygen feed is terminated. This control prevents any accumulation of oxygen in the system in case of catalytic reactor malfunction.

6. On low flow through the recombiner, oxygen feed is terminated. This control prevents an accumulation of oxygen following system malfunction.

7. High discharge temperature from the cooler-condenser (downstream from the catalytic reactor) will terminate oxygen feed. This protects against loss of cooling water flow in the cooler-condenser.

8. High temperature indication by any 1 of 6 thermocouples in the catalyst bed will limit oxygen feed so that no further increase is possible.

9. High temperature indication at the recombiner catalytic reactor discharge will terminate oxygen feed to the recombiner.

11.3.4 OPERATING PROCEDURES

11.3.4.1 General Description

The GWPS is a closed loop comprised of 2 waste gas compressors, 2 catalytic hydrogen recombiners, 6 gas decay tanks for normal power service, 2 gas decay tanks for service at shutdown and startup, 1 gas decay tank drain pump, 1 waste gas drain filter and 4 gas traps. All of the equipment is located in the Auxiliary Building. 02-01

11.3.4.2 Startup Operation

Startup commences with the system flushed free of air by purging with nitrogen which is discharged to the atmosphere. One (1) compressor, 1 recombiner, and 1 shutdown decay tank are in service. The reactor is at cold shutdown and the volume control tank contains nitrogen in the gas space. Reactor coolant contains neither hydrogen nor fission gases, but it may be saturated with air.

When the reactor startup procedure requires that a hydrogen blanket be established in the volume control tank gas space, fresh hydrogen is charged into the tank. The hydrogen-nitrogen mixture vented from the tank enters the circulating nitrogen stream at the compressor suction. Since the pressure downstream remains constant by use of a pressure regulating valve, nitrogen added to the loop will accumulate in the shutdown decay tank causing the tank pressure to rise.

Initially, the volume control tank vent gas will be very lean in hydrogen, and almost all the influent gas will accumulate in the tank. As the operation continues, however, the vent gas hydrogen content will gradually increase until it is almost totally hydrogen at the point when all of the nitrogen has been removed from the coolant. At that time, hydrogen gas is entering the volume control tank at 0.7 scfm and mixing with the 40 scfm circulating nitrogen stream to give a 1.8 volume % mixture of hydrogen in nitrogen at the recombiner inlet. Approximately 0.35 scfm of oxygen is added in the recombiner and reacted with the hydrogen to yield a discharge stream of 0.1 volume % hydrogen in nitrogen after water vapor is condensed.

When the reactor coolant nitrogen concentration is within operating specifications, the shutdown tank is isolated and flow is routed to 1 of the decay tanks provided for normal power service. Gas accumulated in the shutdown tank will be retained for use during operations to strip hydrogen from the reactor coolant when the plant is shut down.

11.3.4.3 Normal Operations

During normal power operation, nitrogen gas is continuously circulated around the loop by 1 of the 2 compressors. Fresh hydrogen gas is charged to the volume control tank where it is mixed with fission gases which are stripped from the reactor coolant into the tank gas space. The contaminated hydrogen gas is then vented from the tank into the circulating nitrogen stream to transport the fission gases into the GWPS. The resulting mixture of nitrogen-hydrogen-fission gas is pumped by the compressor to the recombiner where enough oxygen is added to reduce the hydrogen to a low residual level by oxidation to water vapor on a catalytic surface. After the water vapor is removed, the resulting gas stream is circulated to the waste gas decay tanks and back to the compressor suction to complete the loop circuit.

Each waste gas decay tank is capable of being isolated and the number of tanks valved into operation at any time is restricted to diminish the amount of radioactive gases which could be released as a consequence of any single failure, such as the rupture of any single tank or connected piping. By alternating use of these tanks, the accumulated activity is distributed among the tanks.

11.3.4.4 Shutdown

When the hydrogen contained in the reactor coolant must be removed in preparation for a cold shutdown, the normal gas decay tanks are valved out of service and 1 of the 2 shutdown tanks is placed in service. Additional nitrogen may have to be added to raise the shutdown tank to an acceptable pressure for this operation. In addition, the flow of hydrogen to the volume control tank is stopped, and the tank pressure is maintained with nitrogen. The volume control tank level may be raised and lowered to aid in hydrogen removal. Once the hydrogen concentration has been lowered to acceptable levels the volume control tank purge to the waste gas system may be secured. RN 03-023

11.3.5 PERFORMANCE TESTS

NOTE The following paragraph is being retained for historical purposes only.
Compressor and recombiner packages are subjected to helium leak test after assembly. Initial performance tests are performed to verify the operability of the components, instrumentation, and control equipment.

02-01

During reactor operation the system is in use and hence is under continuous surveillance. The system design permits the use of industry standard leak detection methods for leak testing and subsequent elimination of leaks. 02-01

11.3.6 ESTIMATED RELEASES

Gaseous releases from the Virgil C. Summer Nuclear Station were calculated using the PWR-GALE Code[1] as specified in Regulatory Guide 1.112 (see Appendix 3A). The input parameters used to calculate gaseous releases are listed in Table 11.3-7 and are discussed in more detail in Sections 11.3.6.2 through 11.3.6.4. Calculated releases using the parameters listed in Table 11.3-7 are presented in Table 11.3-8. A comparison of effluent concentrations with 10 CFR 20, Appendix B, Table 2, Column 1 is presented in Section 11.3.8. RN 02-028

11.3.6.1 Gaseous Waste Processing System

The GWPS collects and stores gases stripped from the primary coolant in a continuously recirculating loop which includes pressurized storage tanks. Release calculations for the GWPS are based upon the options allowed by the PWR-GALE Code[1] for such a system (continuous purging of Volume Control Tank, 90 days decay time in storage tanks, 0 day fill time). Using these options and the input parameters given in Table 11.3-7, the GWPS releases are calculated to be 214 Ci/yr of noble gases, 4 x 10^{-4} Ci/yr of airborne particulates, and 7 Ci/yr of Carbon-14. The isotopic distribution of these releases is given in Table 11.3-8 RN 02-028

11.3.6.2 Reactor Building Purge

Radioactive gases are released inside the Reactor Building when primary system components are opened or if leakage from the primary system occurs. The gaseous activity inside the Reactor Building may be purged up to 1000 hours per year in Modes 1-4 by the 6 inch low volume purge system. The low volume purge rate is 600 cfm. Activity is also released periodically when the 36 inch Reactor Building Purge System is used during Modes 5-6. The Reactor Building Charcoal Cleanup System is operated intermittently to reduce airborne iodine concentrations prior to Reactor Building access or purge system operation. The Reactor Building 36 inch and 6 inch purge flow is exhausted to the atmosphere through HEPA filters and charcoal adsorbers. Release calculations are based upon the PWR-GALE Code[1] parameters for leakage rate (1%/day of primary coolant noble gas inventory, 0.001%/day of primary coolant iodine inventory), recirculation cleanup time (16 hours), mixing efficiency (70%), decontamination factors (100 for HEPA filters, 10 for charcoal adsorbers) and number of high volume purges (36 inch during cold shutdown) per year (4) and a conservatively assumed continuous low volume purge (6 inch) rate of 1000 cfm. Using these parameters and the input parameters given in Table 11.3-7, the Reactor Building purge releases are calculated to be 2638 Ci/yr of noble gases, 2.5 x 10^{-2} Ci/yr of iodine, 1.9 x 10^{-3} Ci/yr of airborne particulates, and 1 Ci/yr of Carbon-14. The isotopic distribution of these releases is given in Table 11.3-8. RN 02-028 RN 02-028

11.3.6.3 Auxiliary Building Ventilation

The Auxiliary Building Charcoal Exhaust System continuously exhausts air drawn from Auxiliary Building areas with moderate potential for radioactive contamination (demineralizers, storage tanks, gas decay tanks, evaporators, pump rooms, etc.). The supply and exhaust ducts are arranged so that air flow is always in the direction of progressively greater potential contamination. Exhaust air from these areas is drawn through the roughing/HEPA/charcoal filter plenums continuously and is ducted to the main exhaust fans and the main plant vent. There is no bypass around this filter plenum.

The release calculations are based upon the assumption that reactor coolant leakage in the Auxiliary Building occurs primarily in the areas exhausted by the charcoal exhaust system. PWR-GALE Code [1] parameters for Auxiliary Building leakage (160 lbs/day), iodine partition factor (0.0075), and decontamination factors (100 for HEPA filters, 10 for charcoal adsorbers) have been used in the calculations. Using these parameters and the input parameters given in Table 11.3-7, the Auxiliary Building ventilation release is calculated to be 128 Ci/yr of noble gases, 1.1 x 10^{-2} Ci/yr of iodine, and 1.6 x 10^{-3} Ci/yr of airborne particulates. The isotopic distribution of this release is given in Table 11.3-8. RN 02-028

11.3.6.4 Secondary System

11.3.6.4.1 Turbine Building Vents

Turbine Building steam leakage may release radioactive gas to the Turbine Building atmosphere if primary to secondary leakage occurs. Turbine Building Ventilation System exhausts are not treated prior to release. Release calculations were based on the PWR-GALE Code[1] parameters for steam leakage (1700 lbs/hr), primary to secondary leakage (100 lbs/day), and fraction of iodine that remains airborne (1). Using these parameters and the input parameters given in Table 11.3-7, the Turbine Building vent release is calculated to be 2.4 x 10^{-3} Ci/yr of iodine. The isotopic distribution of this release is given in Table 11.3-8.

11.3.6.4.2 Condenser Air Removal System

Offgas from the Condenser Air Removal System may contain radioactive gases, if primary to secondary leakage occurs. When condenser offgas contains any significant amount of radioactivity, it is exhausted through HEPA filters and charcoal adsorbers in the Auxiliary Building Charcoal Exhaust System from particulate and iodine removal. Release calculations are based upon taking credit for the charcoal adsorbers and the PWR-GALE Code[1] parameters for primary to secondary leakage (100 lbs/day), steam generator partition factors (0.01 for iodine and 0.001 for nonvolatiles), and Main Condenser/Condenser Air Removal System partition factors (0.15 for volatile iodine species and zero for nonvolatile species). Using these parameters and the input parameters given in Table 11.3-7, the Condenser Air Removal System release is calculated to be 81 Ci/year of noble gases and 6.9 x 10^{-3} Ci/yr of iodine. The isotopic distribution of this release is given in Table 11.3-8.

11.3.6.4.3 Steam Generator Blowdown

The Steam Generator Blowdown Processing System provides for cooling the blowdown in heat exchangers to prevent flashing. Consequently, no gaseous release is expected to result from steam generator blowdown.

11.3.6.5 Release Criteria

It is the intent of the Applicant to operate this system by periodically discharging gases stored by the GWPS. This method of operation minimizes disposal of the accumulated inventory at the end of plant life and reduces plant personnel exposure. Planned discharges during periods of favorable meteorology are made after a sample of decayed gaseous effluent is analyzed and are continuously monitored during release. Radiation monitor (RM-A10) automatically terminates the discharge upon detection of high activity by closing the appropriate tank outlet valve. This method of operation provides both operational flexibility and assures that the release of radioactive material in gaseous effluents is within the limits of 10 CFR 20, Appendix B, Table 2, Column 1 and the limits of Appendix I to 10 CFR 50. RN 02-028

11.3.7 RELEASE POINTS

Release points for potentially radioactive gaseous wastes are shown schematically by Figure 11.3-7. Figure 11.3-8 shows the physical locations of these, and other nonradioactive exhausts. Table 11.3-9 presents data for the numbered vents shown by Figure 11.3-8. The data include base and exit elevations of the stacks, cross Section dimensions, volumetric flow rate, exit velocity, and comments. Table 11.3-9a compares exhaust system equipment to Branch Technical Position ETSB 11-2.

11.3.8 DILUTION FACTORS

Dilution factors (χ/Q's) utilized in evaluating the releases of gaseous effluents were calculated according to the methods set forth in Regulatory Guide 1.111, based on 1 year of onsite meteorological data. A detailed discussion of the applicable methodology appears in Section 2.3.5.2; the results of the calculation of annual average (χ/Q's) values are listed in Table 2.3-133. Examination of Table 2.3-133 reveals that the highest concentration of gaseous effluents at the exclusion zone boundary is expected to occur in the southeastern sector, where relative concentration of 5.3×10^{-6} sec/m^3 was calculated.

Expected annual gaseous release rates presented in Table 11.3-8 were used in conjunction with a (χ/Q's) value of 5.3 x 10^{-6} sec/m^3 to estimate maximum expected radioisotope concentrations, in air outside the restricted area. The release rates, the expected concentrations, and the effluent concentration limits from 10 CFR 20, Appendix B, Table 2, are listed in Table 11.3-10. As prescribed in 10 CFR 20, these concentrations are those expected as an average at the exclusion zone boundary over a 1-year period. It can be seen that the expected concentration level of each isotope is well below the individual limit specified. In addition to the limits for each isotope, the requirements of 10 CFR 20, Appendix B state that, for a mixture of radionuclides, the following relationship must hold: RN 02-028

$$\sum_{i=1}^{N} \frac{C_i}{ECL_i} \leq 1$$

RN 02-028

Where:

C_i = concentration of radionuclide i.

ECL_i = effluent concentration limit of radionuclide i from 10 CFR 20, Appendix B, Table 2, Column 1.

N = number of radionuclides in the mixture.

The sum of the ratios of expected radionuclide concentrations to their effluent concentration limits for the mixture defined by the second column of Table 11.3-10 is 3.5 x 10^{-3}, which is less than unity, as required. RN 02-028

11.3.9 ESTIMATED DOSES [2]

Potential pathways of exposure [1] of man to radioactive materials in gaseous effluents from the Virgil C. Summer Nuclear Station are identified and discussed in Section 11.6.2. Doses to individuals in the environs of the plant from each of the potentially significant pathways were calculated; methodology for the results of the calculations are discussed in the following paragraphs.

(1) The term "exposure" as used in this Section refers only to the disposition of radioactive materials in the environment in such a way that persons could receive a dose from them.

(2) Current values are being maintained in the ODCM.

Dilution factors and relative deposition were calculated according to the methods of Regulatory Guide 1.111, as discussed in Section 2.3.

All results presented in these Sections were obtained using the calculational techniques prescribed in Regulatory Guide 1.109. Except where noted in discussion of doses for specific pathways, all usage and consumption values, transport times, bioaccumulation factors, dose conversion factors, and other constants utilized were those suggested in Regulatory Guide 1.109.

Maximum doses to individuals were calculated for cloud submersion, ground plane contamination, inhalation, and vegetable, milk, and meat ingestion pathways. Assumptions, including point of exposure, are described for each pathway in the following paragraphs; the calculated gaseous pathway doses are summarized in Table 11.3-11. All estimates were based on the predicted gaseous releases given in Table 11.3-8. Each dose was calculated at the location of the highest dose offsite at which the pathway could be assumed to exist.

Exposure to an individual from submersion in a cloud containing radioactive effluents was evaluated at the nearest residence, located 1.1 miles to the east-southeast of the plant. The total body dose was calculated to be 6.4×10^{-2} mrem/yr, while the skin dose was 1.8×10^{-1} mrem/yr.

External irradiation from activity deposited on the ground surfaces was also evaluated at the nearest residence. These analyses indicate that a dose of 5.0×10^{-3} mrem/yr to the skin and 4.3×10^{-3} mrem/yr to the total body can be expected from this pathway.

In addition, the nearest residence is the location for estimating the maximum individual dose to be received from the air inhalation pathway. The maximum dose to an organ of an individual at this location inhaling radioiodine and radioparticulates in the plant effluent was calculated to be 6.9×10^{-2} mrem/yr to an adult's thyroid.

The predicted dose to an individual obtaining 100% of his vegetable consumption from a garden adjacent to the nearest residence was also determined. Maximum calculated exposure from this pathway was 7.7×10^{-1} mrem/yr to a child's thyroid. Maximum total body dose was 7.1×10^{-1} mrem/yr to a child.

Predicted doses from ingestion of milk from animals grazing year-round on land contaminated by radioparticulates deposited from the effluent plume were evaluated at the location of the nearest cow, in the west-southwest sector at 1.5 miles from the plant. Although the cow at this location is not currently being milked, the suitability of the location for raising dairy cattle and the increasing popularity of dairying in the region were considered sufficient reason to assume that the pathway could reasonably be expected to exist at this location during the life of the plant. The maximum organ dose from ingestion of milk from a cow grazing year-round at this location was 1.1×10^{0} mrem/yr to an infant's thyroid. The infant is also expected to receive the maximum total body dose of 3.2×10^{-1} mrem/yr.

Exposure from consumption of meat was evaluated at the same location as that for cow milk. The maximum organ dose to an individual from ingestion of meat from a cow grazing year-round at this location was 1.4×10^{-1} mrem/yr to the bones of an adult. The maximum total body dose from the meat ingestion pathway was 4.6×10^{-2} mrem/yr to a child.

Maximum individual doses calculated as described above were used to evaluate the status of conformance of predicted gaseous effluents from the Virgil C. Summer Nuclear Station with the requirements of Appendix I to 10 CFR 50.

The assumptions and results of this evaluation are summarized in Table 11.3-12. Beta and gamma doses in air were calculated according to the methods of Regulatory Guide 1.109. It will be noted that the calculated doses indicate the plant design conforms to the "as low as reasonably achievable" criteria established in Appendix I. Conformance with 10 CFR 50, Appendix I was demonstrated using meteorological data observed during 1975 and preoperational land use census data. During plant operation, conformance with Appendix I will be demonstrated in the USNRC Regulatory Guide 1.21 Annual Radioactive Effluent Release Report. Meteorological data used in preparation of the annual effluent report may consist of meteorological data averaged over multiple years to provide a better estimate of dispersion values. The maximum exposed individual location used for gaseous release dose calculation will be based on current census data 99-01

11.3.10 REFERENCES

1. U.S. Nuclear Regulatory Commission, "Calculation of Releases of Radioactive Materials in Gaseous and Liquid Effluents from Pressurized Water Reactors," NUREG-0017, April, 1976.

TABLE 11.3-1

DESIGN BASIS ACCUMULATED RADIOACTIVITY PER UNIT IN THE GASEOUS WASTE PROCESSING SYSTEM AFTER FORTY YEARS OPERATION 02-01

Activity (Curies)
Following Plant Shutdown

Isotope	Zero Decay	30 Days	50 Days	
Kr-85	53,000	52,700	52,500	RN 02-025
All other noble gases				
Kr-83m	4.3	~ 0	~ 0	
Kr-85m	47.0	~ 0	~ 0	
Kr-87	4.6	~ 0	~ 0	
Kr-88	45.0	~ 0	~ 0	
Xe-131m	530	91	28.1	
Xe-133	56,000	1090	78.8	RN 02-025
Xe-133m	2900	~ 0	~ 0	
Xe-135	500	~ 0	~ 0	
Xe-135m	2.1	~ 0	~ 0	
Xe-138	0.13	~ 0	~ 0	

The table is based on 40 years continuous operation with 1 % fuel defect and 60 gpm letdown. Power assumed to be 2958 MWt. The data are based on a volume control tank purge rate of 0.7 scfm, a 40 % stripping efficiency and the stripping fractions listed in Table 11.1-1.

TABLE 11.3-2

EXPECTED ACCUMULATED RADIOACTIVITY PER UNIT IN THE GASEOUS WASTE PROCESSING SYSTEM AFTER FORTY YEARS OPERATION 02-01

Activity (Curies)
Following Plant Shutdown

Isotope	Zero Decay	30 Days	50 Days
Kr-85	6400	6370	6340
All other noble gases			
Kr-85m	5.0	~ 0	~ 0
Kr-87	0.88	~ 0	~ 0
Kr-88	5.1	~ 0	~ 0
Xe-131m	200	34.3	10.6
Xe-133	550	10.7	0.8
Xe-133m	11	~ 0	~ 0
Xe-135	47	~ 0	~ 0
Xe-135m	0.047	~ 0	~ 0
Xe-138	0.037	~ 0	~ 0

02-01

RN 02-025

RN 02-025

Inventories are based on reactor coolant concentrations given in Table 11.1-5. The table is based on 40 years continous operation with 60 gpm letdown. Power assumed to be 2958 MWt. The data are based on a volume control tank purge rate of 0.7 scfm, a 40 % stripping efficiency and the stripping fractions listed in Table 11.1-6.

TABLE 11.3-3

REDUCTION IN REACTOR COOLANT SYSTEM GASEOUS FISSION PRODUCTS RESULTING FROM NORMAL OPERATION OF THE GASEOUS WASTE PROCESSING SYSTEM (1)

	Reactor Coolant Gaseous Fission Product Activities - μc/gm		02-01
Isotope	GWPS Operating (2)	GWPS Not Operating	02-01
Kr-83m	0.42	0.43	
Kr-85	0.052	7.6	
Kr-85m	1.7	1.8	
Kr-87	1.1	1.1	
Kr-88	3.1	3.2	
Kr-89	0.089	0.089	
Xe-131m	0.23	2.3	
Xe-133	58	290	RN 02-025
Xe-133m	7.2	19	
Xe-135	6.9	8.6	
Xe-135m	0.52	0.52	
Xe-137	0.18	0.18	
Xe-138	0.64	0.64	

(1) Based on operating with cladding defects in fuel generating 1 % of the rated core thermal power (2958 MWt) and a purification letdown rate of 60 gpm.

(2) Volume control tank purge rate is 0.7 scfm.
Stripping efficiency is 40 %.

TABLE 11.3-4

PROCESS PARAMETERS FOR GASEOUS WASTE PROCESSING SYSTEM*

BASIS: Power Level - 2900 MWt
No. of Units - 1

Gas Decay Tanks (Note 4) - 8
Operating Interval - 1 day
Stripping Efficiency - 0.4

ITEM DESCRIPTION	TEMP	PRESS	FLOW	N_2	H_2	ISOTOPIC CONCENTRATION, μC/cc (NOTE 1)							
GAS STREAMS	°F	PSIG	SCFM	%	%	KR 85 (NOTE 3)	KR85M	KR87	KR88	XE-133	XE-133M	XE-135	
1. VOLUME CONTROL TANK PURGE	130	15	0.7	0	100	3.07×10^{-2}	1.81×10^{-1}	6.51×10^{-2}	1.67×10^{-1}	1.95×10^{1}	3.81×10^{-1}	8.74×10^{-1}	02-01
2. GAS DECAY TANK DISCH. TO COMP.	AMB	0.5	40	99.9	0.1	1.31×10^{1}	9.95×10^{-2}	5.61×10^{-3}	1.45×10^{-1}	3.79×10^{1}	1.40	5.50×10^{-1}	
3. COMPRESSOR SUCTION	AMB	0.5	40.7	98.3	1.7	1.29×10^{1}	1.01×10^{-1}	6.63×10^{-3}	1.45×10^{-1}	3.76×10^{1}	1.39	5.56×10^{-1}	
4. COMP. DISCH. TO RECOMBINER	140	45	40.7	98.3	1.7	1.29×10^{1}	1.01×10^{-1}	6.63×10^{-3}	1.45×10^{-1}	3.76×10^{1}	1.39	5.56×10^{-1}	
5. RECOMBINER DISCH. TO GAS DECAY TANKS	140	30	40	99.9	0.1	1.31×10^{1}	1.03×10^{-1}	6.75×10^{-3}	1.48×10^{-1}	3.82×10^{1}	1.41	5.66×10^{-1}	
6. MISC. VENTS-EVAPS. RCDT. RECYCLE HOLDUP TANK EDUCTOR	140	0.5	NEG	0	100	0	0	0	0	0	0	0	02-01
7. RECOMBINER OXYGEN SUPPLY	AMB	50	0.35	0	0	0	0	0	0	0	0	0	
8. RECOMBINER CALIBRATING GAS	AMB	15	0.004	100	4	0	0	0	0	0	0	0	98-01
9. RECOMBINER CALIBRATING GAS	AMB	ATM	0.004	100	4	0	0	0	0	0	0	0	

TABLE 11.3-4 (Continued)

PROCESS PARAMETERS FOR GASEOUS WASTE PROCESSING SYSTEM*

ITEM DESCRIPTION	TEMP	PRESS	FLOW	N_2	H_2	ISOTOPIC CONCENTRATION, μC/cc (NOTE 1)							02-01
GAS STREAMS	°F	PSIG	SCFM	%	%	KR 85 (NOTE 3)	KR85M	KR87	KR88	XE-133	XE-133M	XE-135	
10. WASTE GAS SYSTEM NITROGEN SUPPLY	AMB	100	0	100	0	0	0	0	0	0	0	0	02-01
11. NSSS NITROGEN SUPPLY	AMB	100	0	100	0	0	0	0	0	0	0	0	
12. NITROGEN RELIEF TO PLANT VENT	AMB	100	0	100	0	0	0	0	0	0	0	0	
13. NSS HYDROGEN SUPPLY	AMB	100	0.7	0	100	0	0	0	0	0	0	0	
14. VOLUME CONTROL TANK HYDROGEN	AMB	100	0.7	0	100	0	0	0	0	0	0	0	02-01
15. HYDROGEN RELIEF TO PLANT VENT	AMB	100	0	0	100	0	0	0	0	0	0	0	
16. WASTE GAS DISCH. TO PLANT VENT	AMB	ATM	0	100	0	1.31×10^{1}	0	0	0	0	0	0	02-01
17. RECYCLE GAS TO VOLUME CONTROL TANK	AMB	100	0	100	0	0	0	0	0	0	0	0	
18. PRESSURIZER RELIEF TANK VENT AND RETURN	120	3	0	100	0	0	0	0	0	0	0	0	
19. SHUTDOWN TANK RELIEF	AMB	ATM	0	100	0	0	0	0	0	0	0	0	

TABLE 11.3-4 (Continued)

PROCESS PARAMETERS FOR GASEOUS WASTE PROCESSING SYSTEM*

ITEM DESCRIPTION	TEMP	PRESS	FLOW	ISOTOPIC CONCENTRATION μC/cc (NOTE 2)							
LIQUID STREAMS	°F	PSIG	GPD	KR85 (NOTE 3)	KR85M	KR87	KR88	XE-133	XE-133M	XE-135	02-01
1. WASTE GAS COMPRESSOR DRAIN	140	45	0	3.43	2.69×10^{-2}	1.77×10^{-3}	3.87×10^{-2}	8.27	3.05×10^{-1}	1.22×10^{-1}	
2. RECOMBINER DRAIN	140	30	6	2.61	2.05×10^{-2}	1.35×10^{-3}	2.95×10^{-2}	6.30	2.32×10^{-1}	9.32×10^{-2}	
3. GAS DECAY TANK DRAINS	AMB	40	36	9.18×10^{-1}	6.98×10^{-3}	3.94×10^{-4}	1.02×10^{-2}	2.20	8.13×10^{-2}	3.19×10^{-2}	02-01
4. SYSTEM DRAINS TO VOL CONTROL TANK	140	30-45	42	1.16	8.91×10^{-3}	5.30×10^{-4}	1.29×10^{-2}	2.78	1.02×10^{-1}	4.07×10^{-2}	
5. RECOMBINER REACTOR MAKEUP WATER	AMB		0	0	0	0	0	0	0	0	02-01
6. COMPRESSOR MAKEUP WATER	AMB		36	0	0	0	0	0	0	0	

TABLE 11.3-4 (Continued)

PROCESS PARAMETERS FOR GASEOUS WASTE PROCESSING SYSTEM*

ITEM	COMPONENT	TEMP °F	PRESS PSIG	VOL FT^3	N_2 %	H_2 %	COMPONENT INVENTORY, CURIES KR 85 (NOTE 3)	KR85M	KR87	KR88	XE-133	XE-133M	XE-135	02-01
A	COMPRESSOR	140	45	4	98.3	1.7	6.02	4.58×10^{-2}	2.58×10^{-3}	6.67×10^{-2}	1.74×10^{1}	6.45×10^{-1}	2.53×10^{-1}	
B.	RECOMBINER	140	30	4	99.9	0.1	4.51	3.42×10^{-2}	1.93×10^{-3}	4.99×10^{-1}	1.3×10^{1}	4.82×10^{-1}	1.89×10^{-1}	
C.	GAS DECAY TANK	AMB	1.0	600	99.9	0.1	1.04×10^{3}	1.80	1.02×10^{-1}	2.62	6.86×10^{2}	2.54×10^{1}	9.96	
	TOTAL SYSTEM						6.28×10^{3}	1.88	1.06×10^{-1}	2.74	3.18×10^{3}	2.65×10^{1}	1.04×10^{1}	

* based on stripping fractions from Table 11.1-6 and reactor coolant activities from Table 11.1-5.

NOTES:

1. Concentration in μc per cc of gas at atmospheric pressure and 140°F. 02-01
2. Concentrations in μc per cc liquid at room temperature.
3. Kr - 85 concentrations are maximum values, but do not occur simultaneously with other isotope maximum concentrations.
4. Includes two shutdown tanks. 02-01
5. AMB - Ambient
6. NEG - Negligible
7. ATM - Atmospheric

TABLE 11.3-5

GASEOUS WASTE PROCESSING SYSTEM COMPONENT DATA

Waste Gas Compressor Packages	
Number	2
Design pressure, psig	150
Design temperature, °F	180
Normal operating temperature, °F	70-140
Normal operating pressure, psig	
Suction	0.5-2.0
Discharge	0-110
Design flowrate (N_2 at 60°F, 0 psig), scfm	40
Waste Gas Decay Tanks	
Number	8
Design pressure, psig	150
Design temperature, °F	180
Volume (Each). ft^3	600
Normal operating pressure, psig	0-110
Normal operating temperature, °F	50-140
Material of construction	Carbon Steel
Catalytic Hydrogen Recombiner Packages	
Number	2
Design inlet pressure, psig	110
Design inlet temperature, °F	140
Design flowrate, scfm	40
Design hydrogen recombiner rate, scfm	2.4
Design discharge pressure, psig	15
Design discharge temperature, °F	140
Material of construction	Stainless Steel

02-01

TABLE 11.3-6

GASEOUS WASTE PROCESSING SYSTEM INSTRUMENTATION DESIGN PARAMETERS

A - Alarm
C - Control
F - Flow
I - Indication
L - Level
P - Pressure
Q - Water Integrator
R - Radiation
T - Temperature

Channel Number	Location of Primary Sensor	Design Pressure (psig)	Design Temperature (°F)	Range	Alarm Setpoint	Control Setpoint	Location of Readout	
FLOW INSTRUMENTATION								
FIA - 1094	Volume Control Tank Discharge Flow	150	250	0.3-1.2 scfm	1.2 scfm		WPS panel	
QAI - 1091	Gas Decay Tank Water Flush	150	180	0-6000 gal	3000-6000 gal (adjustable)		Local	
PRESSURE INSTRUMENTATION								
PI - 1031	Moisture Separator	150	180	0-160 psig			Local	RN 07-010
PI - 1033	Moisture Separator	150	180	0-160 psig			Local	
PIA - 1036	Gas Decay Tank Number 1	150	180	0-150 psig 0-30 psig	100 psig 20 psig			
PIA - 1037	Gas Decay Tank Number 2	150	180	0-150 psig 0-30 psig	100 psig 20 psig		WPS panel	02-01
PIA - 1038	Gas Decay Tank Number 3	150	180	0-150 psig 0-30 psig	100 psig 20 psig		WPS panel	
PIA - 1039	Gas Decay Tank Number 4	150	180	0-150 psig 0-30 psig	100 psig 20 psig		WPS panel	

TABLE 11.3-6 (Continued)

GASEOUS WASTE PROCESSING SYSTEM INSTRUMENTATION DESIGN PARAMETERS

Channel Number	Location of Primary Sensor	Design Pressure (psig)	Design Temperature (°F)	Range	Alarm Setpoint	Control Setpoint	Location of Readout	
PRESSURE INSTRUMENTATION (Cont)								
PIA - 1052	Gas Decay Tank Number 5	150	180	0-150 psig 0-30 psig	100 psig 20 psig		WPS panel	02-01
PIA - 1053	Gas Decay Tank Number 6	150	180	0-150 psig 0-30 psig	100 psig 20 psig		WPS panel	
PIA - 1054	Gas Decay Tank Number 7	150	180	0-150 psig 0-30 psig	100 psig 20 psig		WPS panel	
PIA - 1055	Gas Decay Tank Number 8	150	180	0-150 psig 0-30 psig	100 psig 20 psig		WPS panel	
PIA - 1065	Hydrogen Supply Header	150	180	0-150 psig	90 psig		WPS panel	
PIA - 1066	Nitrogen Supply Header	150	180	0-150 psig	90 psig		WPS panel	
PICA - 1092	Compressor Suction Header	150	180	2 psi vac.- 2 psig	0.5 psi	0.5 psi vac.	WPS panel	02-01
PI - 1093	Gas Decay Tank Makeup Water	150	180	0-150 psig	2 psi		Local	
PA - 1094	Volume Control Tank Discharge Pressure	150	250	0-20 psig			Local	

TABLE 11.3-6 (Continued)

GASEOUS WASTE PROCESSING SYSTEM INSTRUMENTATION DESIGN PARAMETERS

Channel Number	Location of Primary Sensor	Design Pressure (psig)	Design Temperature (°F)	Range	Alarm Setpoint	Control Setpoint	Location of Readout	
LEVEL INSTRUMENTATION								
LICA - 1030	Compressor Moisture Separator	150	180	0-30 Inches H_20	15 inches H_20	15 to -10 inches 8 to -5 inch -1 inches H_20	WPS panel and local	
LICA - 1032	Compressor Moisture Separator	150	180	0-30 inches H_20	15 inches H_20	15 to -10 inches -8 to -5 inches -1 inches H_20	WPS panel and local	02-01
RADIATION INSTRUMENTATION								
RM - A10	Gas Discharge Monitor	15	100	-	Adjustable	-	WPS panel and control room	

TABLE 11.3-7

PWR-GALE CODE INPUT PARAMETERS USED IN CALCULATING RELEASES OF RADIOACTIVE MATERIALS IN GASEOUS EFFLUENTS 02-01

Reactor Power Level, MWt	2914	RN 02-028
Holdup Time for Xenon Stripped from Primary Coolant, days	90	
Holdup Time for Krypton Stripped from Primary Coolant, days	90	
Reactor Building Free Volume, million ft^3	1.84	
Flow Rate through Reactor Building Charcoal Cleanup System, thousand cfm	24	02-01
Continuous Reactor Building Ventilation Rate, cfm	1000 (1)	RN 02-028
Primary System		
Mass of Primary Coolant, thousand lbs	404	
Letdown Rate, gpm	60	
Letdown Cation Demineralizer Flow Rate, gpm	6	
Secondary System		
Steam Flow Rate, million lbs/hr	12.2	
Mass of Steam/Steam Generator, thousand lbs	8.56	
Mass of Liquid/Steam Generator, thousand lbs	94	
Mass of Secondary Coolant, thousand lbs	2260	02-01
Steam Generator Blowdown Rate, thousand lbs/hr	61	
Steam Generator Blowdown Tank Vent Option	Not applicable because of cooling by heat exchangers.	
HEPA/Charcoal Treatment of Releases		
Gaseous Waste Processing System	See Section 11.3.6.1	
Reactor Building Purge	See Section 11.3.6.2	
Auxiliary Building Ventilation	See Section 11.3.6.3	
Condenser Air Removal System	See Section 11.3.6.4.2	
Gas Stripping of Letdown Flow Option	Continuous purging of volume control tank.	

(1) Conservative scenario that maximizes the estimated annual gaseous effluents via Reactor Building purge. The current Technical Specifications limit the Reactor Building purge at power to no more than 1000 hours per year at a design flow of 600 cfm. RN 02-028

TABLE 11.3-8

CALCULATED RELEASES OF RADIOACTIVE MATERIALS IN GASEOUS EFFLUENTS FROM THE PLANT [1]

02-01

Nuclide	Releases (Ci/yr)					
	Gaseous Waste Processing System	Reactor Building Purge Exhaust	Auxiliary Building Leakage	Turbine Building Leakage	Condenser Air Removal System	Total
Kr-83m	(2)	1	(2)	(2)	(2)	1
Kr-85m	(2)	11	2	(2)	2	15
Kr-85	210	4	(2)	(2)	(2)	220
Kr-87	(2)	2	1	(2)	(2)	3
Kr-88	(2)	14	5	(2)	3	22
Kr-89	(2)	(2)	(2)	(2)	(2)	(2)
Xe-131m	3	10	(2)	(2)	(2)	13
Xe-133m	(2)	42	2	(2)	1	45
Xe-133	1	2500	110	(2)	71	2700
Xe-135m	(2)	(2)	(2)	(2)	(2)	(2)
Xe-135	(2)	54	7	(2)	4	65
Xe-137	(2)	(2)	(2)	(2)	(2)	(2)
Xe-138	(2)	(2)	1	(2)	(2)	1
I-131	(2)	1.4×10^{-2}	4.6×10^{-3}	1.1×10^{-3}	2.8×10^{-3}	2.3×10^{-2}
I-133	(2)	1.1×10^{-2}	6.6×10^{-3}	1.3×10^{-3}	4.1×10^{-3}	2.3×10^{-2}
Mn-54	4.5×10^{-5}	2.1×10^{-4}	1.8×10^{-4}	(3)	(3)	4.3×10^{-4}
Fe-59	1.5×10^{-5}	7.3×10^{-5}	6.0×10^{-5}	(3)	(3)	1.5×10^{-4}
Co-58	1.5×10^{-4}	7.3×10^{-4}	6.0×10^{-4}	(3)	(3)	1.5×10^{-3}
Co-60	7.0×10^{-5}	3.3×10^{-4}	2.7×10^{-4}	(3)	(3)	6.7×10^{-4}
Sr-89	3.3×10^{-6}	1.7×10^{-5}	1.3×10^{-5}	(3)	(3)	3.3×10^{-5}
Sr-90	6.0×10^{-7}	2.9×10^{-6}	2.4×10^{-6}	(3)	(3)	5.9×10^{-6}
Cs-134	4.5×10^{-5}	2.1×10^{-4}	1.8×10^{-4}	(3)	(3)	4.3×10^{-4}
Cs-137	7.5×10^{-5}	3.7×10^{-4}	3.0×10^{-4}	(3)	(3)	7.4×10^{-4}
C-14	7	1				8
H-3						580
Ar-41		25				25

(1) Based upon the parameters given in Table 11.3-7.
(2) Less than 1 Ci/yr noble gases, less than 10^{-4} Ci/yr for iodine.
(3) Less than 1% of total for nuclide.

TABLE 11.3-9

STACK RELEASE INFORMATION

Item No. [1]	Item	Location (Building)	Base Elevation	Exit Elevation	Exit Area Cross Section	Volume Flow Rate	Estimated Exit Velocity	
1.	Main Plant Vent	Auxiliary	511'-0"	524'-0"	72 by 96 in	172,000 cfm	3,583 fpm	
2.	Purge Exhaust	Auxiliary	511'-0"	524'-0"	36 by 36 in	20,000 cfm	2,220 fpm	
3.	Condensate Return Unit Vent	Auxiliary	418'-0"	455'-3"	28.9 in^2	2,700 lb/hr [2]	6,000 fpm	02-01
4.	Air Exhaust	Control	505'-0"	512'-0"	72 by 48 in	9,000 cfm	375 fpm	
5.	Air Exhaust	Control	505'-0"	512'-0"	72 by 48 in	9,000 cfm	375 fpm	
6	Air Exhaust [3]	Intermediate	463'-0"	492'-0"	38 by 14 in	10,200 cfm	2,760 fpm	
7.	Air Exhaust [3]	Intermediate	485'-0"	463'-0"	84 by 24 in	40, 000 cfm	2,860 fpm	
8.	Condenser Exhaust [4]	Turbine	415'-0"	454'-6"	113.1 in^2	800 lb/hr	750 fpm	
9.	Main Steam Dump [5] (3 points)	Intermediate	463'-0"	471'-0"	101.6 in^2 each	740,000 lb/hr each	(6)	02-01
10.	Main Steam Safety and Relief Valves[7] (10 points)	Intermediate	463'-0"	475'-0"	233.7 in^2 each	930,000 lb/hr each	40,000 fpm	02-01
	Main Steam Safety and Relief Valves[7] (5 points)	Auxiliary	485'-0"	497'-0"	233.7 in^2 each	930,000 lb/hr each	40,000 fpm	

Reformatted Per Amendment 02-01

TABLE 11.3-9 (Continued)

STACK RELEASE INFORMATION

Item No. (1)	Item	Location (Building)	Base Elevation	Exit Elevation	Exit Area Cross Section	Volume Flow Rate	Estimated Exit Velocity	
11.	Main Steam Power Relief Valves(5) (2 points)	Intermediate	463'-0"	475'-0"	113.1 in^2 each	740,000 lb/hr each	(6)	02-01
	Main Steam Power Relief Valve(5) (1 point)	Auxiliary	485'-0"	497'-0"	113.1 in^2 each	740,000 lb/hr each	(6)	02-01
12.	Roof Vent (3 points)	Turbine	-	503'-0"	48 in dia each	34,087 cfm each	1,115 fpm	
13.	Roof Vent (7 points)	Turbine	-	533'-0"	120 in dia each	199,958 cfm each	1,000 fpm	
14.	Reheat Steam Safety Relief Valves(8) (4 points)	Turbine	474'-0"	531'-0"	975.8 in^2	2.33×10^6 lb/hr	40,000 fpm	02-01
15.	EFW Pump Exhaust	Intermediate	420'-0"	475'-0"	135 in^2	15,000 cfm	15,000 fpm	

TABLE 11.3-9 (Continued)

STACK RELEASE INFORMATION

NOTES

(1) See Figure 11.3-8 for location.

(2) Condensate return unit vent volume flow rate is maximum theoretically possible.

(3) Location of intermediate building air exhaust relative to air intakes has not been finalized.

(4) Condenser exhaust flow is continuous.

(5) Main steam dump and power relief estimated occurrences are as follows:

a. Actual, 22 times per year for 10 minutes each time.
b. Test, 12 times per year for 1 minute each time. 02-01

(6) Main steam dump and power relief exit velocities are not available. Each vent incorporates a valve and exit diffuser of a proprietary design which diffuses and disperses the flow in a horizontal pattern, 360 degrees around the vent vertical axis. The volume flow rate is the flow through the vent stack prior to diffuser release.

(7) Main steam safety and relief estimated occurrences are as follows:

a. Actual, 2 times per year for 2 minutes each time.
b. Test, 3 times per year for less than 1 minute each time.

(8) Not expected to occur during life of plant. Test monthly for 10 minutes each time.

TABLE 11.3-9a

COMPARISON OF NORMAL VENTILATION EXHAUST SYSTEM
AIR FILTRATION AND ADSORPTION UNITS WITH BRANCH TECHNICAL POSITION ETSB 11-2

Branch Technical Position ETSB 11-2 Item	Reactor Building Purge Exhaust System	Reactor Building Charcoal Cleanup System	Auxiliary Building HEPA Exhaust System	Auxiliary Building Charcoal Exhaust System	Fuel Handling Building Charcoal Exhaust System	Controlled Access Area Exhaust System	Hot Machine Shop Ventilation System
B-1-a	System complies, except design is for intermittent operation.	System complies, except design is for intermittent operation.	System complies.	System complies.	System complies.	System complies.	System complies.
B-1-b	System complies.	System complies.	System complies.	System complies.	System complies.	System complies.	System complies.
B-1-c	System complies.	System complies.	System complies.	System complies.	System complies.	System complies.	System complies.
B-1-d	System complies.	System complies.	System complies.	System complies.	System complies.	System complies.	System complies.
B-2-a	System complies, except that heaters or cooling coils have not been used because relative humidity will not exceed 70 percent.	System complies, except that heaters or cooling coils have not been used because relative humidity will not exceed 70 percent.	System complies, except charcoal filters are not used.	System complies, except that heaters or cooling coils have not been used because relative humidity will not exceed 70 percent.	System complies, except that heaters or cooling coils have not been used because relative humidity will not exceed 70 percent.	System complies, except that heaters or cooling coils have not been used because relative humidity will not exceed 70 percent.	System complies, except charcoal filters are not used.
B-2-b	System complies.	System complies.	System plenum capacity is 50,000 cfm, 2 banks each, 5 filters wide by 5 filters high.	System plenum capacity is 45,000 cfm, 9 filters wide by 5 filters high.	System complies.	System complies.	System complies.
B-2-c	System has local differential pressure devices across filter banks - no alarm.	System has local differential pressure devices across filter banks - no alarm.	System has local differential pressure devices across filter banks - no alarm.	System has local differential pressure devices across filter banks - no alarm.	System has local differential pressure devices across filter banks - no alarm.	System has local differential pressure devices across filter banks - no alarm.	System has local differential pressure devices across filter banks - no alarm.
B-2-d	Wiring was purchased and qualified to IPCEA and IEEE Standards.	Wiring was purchased and qualified to IPCEA and IEEE Standards.	Wiring was purchased and qualified to IPCEA and IEEE Standards.	Wiring was purchased and qualified to IPCEA and IEEE Standards.	Wiring was purchased and qualified to IPCEA and IEEE Standards.	Wiring was purchased and qualified to IPCEA and IEEE Standards.	Wiring was purchased and qualified to IPCEA and IEEE Standards.
B-2-e	System complies.	System complies.	System complies.	System complies.	System complies.	System complies.	System complies.
B-2-f	System complies.	System complies.	System complies.	System complies.	System complies.	System complies.	System complies.

02-01

Reformatted Per
Amendment 00-01

TABLE 11.3-9a (Continued)

COMPARISON OF NORMAL VENTILATION EXHAUST SYSTEM
AIR FILTRATION AND ADSORPTION UNITS WITH BRANCH TECHNICAL POSITION ETSB 11-2

Branch Technical Position ETSB 11-2 Item	Reactor Building Purge Exhaust System	Reactor Building Charcoal Cleanup System	Auxiliary Building HEPA Exhaust System	Auxiliary Building Charcoal Exhaust System	Fuel Handling Building Charcoal Exhaust System	Controlled Access Area Exhaust System	Hot Machine Shop Ventilation System	
B-2-g	Plenums were specified to indicate no leakage through soap bubble testing with ducts at 2 psig.	Plenums were specified to indicate no leakage through soap bubble testing with ducts at 2 psig.	Plenums were specified to indicate no leakage through soap bubble testing with ducts at 2 psig.	Plenums were specified to indicate no leakage through soap bubble testing with ducts at 2 psig.	Plenums were specified to indicate no leakage through soap bubble testing with ducts at 2 psig.	Plenums were specified to indicate no leakage through soap bubble testing with ducts at 2 psig.	Plenums were specified to indicate no leakage through soap bubble testing with ducts at 2 psig.	
	Ducts were specified to satisfy leakage testing requirements of SMACNA, Chapter 8, 1967.	Ducts were specified to satisfy leakage testing requirements of SMACNA, Chapter 8, 1967.	Ducts were specified to satisfy leakage testing requirements of SMACNA, Chapter 8, 1967.	Ducts were specified to satisfy leakage testing requirements of SMACNA, Chapter 8, 1967.	Ducts were specified to satisfy leakage testing requirements of SMACNA, Chapter 8, 1967.	Ducts were specified to satisfy leakage testing requirements of SMACNA, Chapter 8, 1967.	Ducts were specified to satisfy leakage testing requirements of SMACNA, Chapter 8, 1967.	
B-3-a	Heaters not used in exhaust system plenums because relative humidity is not expected to exceed 70 percent.	Heaters not used in exhaust system plenums because relative humidity is not expected to exceed 70 percent.	Heaters not used in exhaust system plenums because relative humidity is not expected to exceed 70 percent.	Heaters not used in exhaust system plenums because relative humidity is not expected to exceed 70 percent.	Heaters not used in exhaust system plenums because relative humidity is not expected to exceed 70 percent.	Heaters not used in exhaust system plenums because relative humidity is not expected to exceed 70 percent.	Heaters not used in exhaust system plenums because relative humidity is not expected to exceed 70 percent.	
B-3-b	System complies. with this requirement	System complies. with this requirement	System complies. with this requirement	System complies. with this requirement	System complies. with this requirement	System complies. with this requirement	System complies. with this requirement	
B-3-c	System complies. with this requirement	System complies. with this requirement	System complies. with this requirement	System complies. with this requirement	System complies. with this requirement	System complies. with this requirement	System complies. with this requirement	
B-3-d	System complies. with this requirement	System complies. with this requirement	System complies. with this requirement	System complies. with this requirement	System complies. with this requirement	System complies. with this requirement	System complies. with this requirement	
B-3-e	System generally complies, except access has been provided on one side of plenum.	System generally complies, except access has been provided on one side of plenum.	System generally complies, except access doors have been provided on one side of plenum and capacity is 51,000 cfm.	System generally complies, except access doors have been provided on one side of plenum and capacity is 45,000 cfm.	System generally complies, except access doors have been provided on one side of plenum.	System generally complies, except access doors have been provided on one side of plenum.	System generally complies, except access doors have been provided on one side of plenum.	02-01

02-01

Reformatted Per
Amendment 00-01

TABLE 11.3-9a (Continued)

COMPARISON OF NORMAL VENTILATION EXHAUST SYSTEM
AIR FILTRATION AND ADSORPTION UNITS WITH BRANCH TECHNICAL POSITION ETSB 11-2

Branch Technical Position ETSB 11-2 Item	Reactor Building Purge Exhaust System	Reactor Building Charcoal Cleanup System	Auxiliary Building HEPA Exhaust System	Auxiliary Building Charcoal Exhaust System	Fuel Handling Building Charcoal Exhaust System	Controlled Access Area Exhaust System	Hot Machine Shop Ventilation System	02-01
B-3-f	System generally complies, except testing is in accordance with SMACNA Standards.	System generally complies, except testing is in accordance with SMACNA Standards.	System generally complies, except testing is in accordance with SMACNA Standards.	System generally complies, except testing is in accordance with SMACNA Standards.	System generally complies, except testing is in accordance with SMACNA Standards.	System generally complies, except testing is in accordance with SMACNA Standards.	System generally complies, except testing is in accordance with SMACNA Standards.	
B-3-g	System complies.	System complies.	Not applicable.	System complies.	System complies.	System complies.	Not applicable	
B-3-h	System complies.	System complies.	Not applicable	System complies.	System complies.	System complies.	Not applicable	
B-3-i	System generally complies.	System generally complies.	System generally complies.	System generally complies.	System generally complies.	System generally complies.	System generally complies.	
B-3-j	System complies.	System complies.	System complies.	System complies.	System complies.	System complies.	System complies.	
B-3-k	System complies.	System complies.	System complies.	System complies.	System complies.	System complies.	System complies.	
B-3-l	System generally complies.	System generally complies.	System generally complies.	System generally complies.	System generally complies.	System generally complies.	System generally complies.	
B-4-a	System complies.	System complies.	System complies.	System complies.	System complies.	System complies.	System complies.	
B-4-b	System complies, except door sizes are 30” by 60”.	System complies, except door sizes are 30” by 60”.	System complies, except door sizes are 30” by 60”.	System complies, except door sizes are 30” by 60”.	System complies, except door sizes are 30” by 60”.	System complies, except door sizes are 30” by 60”.	System complies, except door sizes are 30” by 60”.	
B-4-c	System complies.	System complies.	System complies.	System complies.	System complies.	System complies.	System complies.	
B-4-d	Openings have been provided for insertion of test probes.	Openings have been provided for insertion of test probes.	Openings have been provided for insertion of test probes.	Openings have been provided for insertion of test probes.	Openings have been provided for insertion of test probes.	Openings have been provided for insertion of test probes.	Openings have been provided for insertion of test probes.	
B-4-e	System startup and operating procedures comply with this requirement.	System startup and operating procedures comply with this requirement.	System startup and operating procedures comply with this requirement.	System startup and operating procedures comply with this requirement.	System startup and operating procedures comply with this requirement.	System startup and operating procedures comply with this requirement.	System startup and operating procedures comply with this requirement.	

TABLE 11.3-9a (Continued)

COMPARISON OF NORMAL VENTILATION EXHAUST SYSTEM
AIR FILTRATION AND ADSORPTION UNITS WITH BRANCH TECHNICAL POSITION ETSB 11-2

Branch Technical Position ETSB 11-2 Item	Reactor Building Purge Exhaust System	Reactor Building Charcoal Cleanup System	Auxiliary Building HEPA Exhaust System	Auxiliary Building Charcoal Exhaust System	Fuel Handling Building Charcoal Exhaust System	Controlled Access Area Exhaust System	Hot Machine Shop Ventilation System	
B-5-a	Filter plenum tested in place initially and at frequency not to exceed 18 months. Tests include visual inspection.	Filter plenum tested in place initially and at frequency not to exceed 18 months. Tests include visual inspection.	Filter plenum tested in place initially and at frequency not to exceed 18 months. Tests include visual inspection.	Filter plenum tested in place initially and at frequency not to exceed 18 months. Tests include visual inspection.	Filter plenum tested in place initially and at frequency not to exceed 18 months. Tests include visual inspection.	Filter plenum tested in place initially and at frequency not to exceed 18 months. Tests include visual inspection.	Filter plenum tested in place initially and at frequency not to exceed 18 months. Tests include visual inspection.	02-01
B-5-b	Filter system total flow rate will be checked for ±10 percent.	Filter system total flow rate will be checked for ±10 percent.	Filter system total flow rate will be checked for ±10 percent.	Filter system total flow rate will be checked for ±10 percent.	Filter system total flow rate will be checked for ±10 percent.	Filter system total flow rate will be checked for ±10 percent.	Filter system total flow rate will be checked for ±10 percent.	02-01
B-5-c	Filter plenums will be DOP tested at frequency noted in B-5-a above & following painting, fire or chem. release near the filter plenum. Filters will be tested in accor. with ANSI 101.1 Section 3.	Filter plenums will be DOP tested at frequency noted in B-5-a above & following painting, fire or chem. release near the filter plenum. Filters will be tested in accor. with ANSI 101.1 Section 3.	Filter plenums will be DOP tested at frequency noted in B-5-a above & following painting, fire or chem. release near the filter plenum. Filters will be tested in accor. with ANSI 101.1 Section 3.	Filter plenums will be DOP tested at frequency noted in B-5-a above & following painting, fire or chem. release near the filter plenum. Filters will be tested in accor. with ANSI 101.1 Section 3.	Filter plenums will be DOP tested at frequency noted in B-5-a above & following painting, fire or chem. release near the filter plenum. Filters will be tested in accor. with ANSI 101.1 Section 3.	Filter plenums will be DOP tested at frequency noted in B-5-a above & following painting, fire or chem. release near the filter plenum. Filters will be tested in accor. with ANSI 101.1 Section 3.	Filter plenums will be DOP tested at frequency noted in B-5-a above & following painting, fire or chem. release near the filter plenum. Filters will be tested in accor. with ANSI 101.1 Section 3.	02-01
B-5-d	Filter plen. will be tested with refrig. at the freq. noted in B-5-a above & following painting, fire or chem. release near the filter plenum. Filters will be tested in accor. with App. B of DP-1082.	Filter plen. will be tested with refrig. at the freq. noted in B-5-a above & following painting, fire or chem. release near the filter plenum. Filters will be tested in accor. with App. B of DP-1082.	Not Applicable,	Filter plen. will be tested with refrig. at the freq. noted in B-5-a above & following painting, fire or chem. release near the filter plenum. Filters will be tested in accor. with App. B of DP-1082.	Filter plen. will be tested with refrig. at the freq. noted in B-5-a above & following painting, fire or chem. release near the filter plenum. Filters will be tested in accor. with App. B of DP-1082.	Filter plen. will be tested with refrig. at the freq. noted in B-5-a above & following painting, fire or chem. release near the filter plenum. Filters will be tested in accor. with App. B of DP-1082.	Not Applicable.	

Reformatted Per
Amendment 00-01

TABLE 11.3-9a (Continued)

COMPARISON OF NORMAL VENTILATION EXHAUST SYSTEM
AIR FILTRATION AND ADSORPTION UNITS WITH BRANCH TECHNICAL POSITION ETSB 11-2

Branch Technical Position ETSB 11-2 Item	Reactor Building Purge Exhaust System	Reactor Building Charcoal Cleanup System	Auxiliary Building HEPA Exhaust System	Auxiliary Building Charcoal Exhaust System	Fuel Handling Building Charcoal Exhaust System	Controlled Access Area Exhaust System	Hot Machine Shop Ventilation System	
B-6-a, b	Char. media from those plen. shall be lab tested at a freq. not to exceed 18 mo. Sample shall be obtained by removing 1 entire bed from an adsorber tray & with drawing a 2" thick x 2" dia. sample. Lab test shall verify an iodine removal eff. of 90 percent for radioactive methyl iodine and it shall be in accor. w/RDT M16-IT para. 4.5.3.	Char. media from those plen. shall be lab tested at a freq. not to exceed 18 mo. Sample shall be obtained by removing 1 entire bed from an adsorber tray & with drawing a 2" thick x 2" dia. sample. Lab test shall verify an iodine removal eff. of 90 percent for radioactive methyl iodine and it shall be in accor. w/RDT M16-IT para. 4.5.3.	Not Applicable.	Char. media from those plen. shall be lab tested at a freq. not to exceed 18 mo. Sample shall be obtained by removing 1 entire bed from an adsorber tray & with drawing a 2" thick x 2" dia. sample. Lab test shall verify an iodine removal eff. of 90 percent for radioactive methyl iodine and it shall be in accor. w/RDT M16-IT para. 4.5.3.	Char. media from those plen. shall be lab tested at a freq. not to exceed 18 mo. Sample shall be obtained by drawing a 2" thick x 2" dia. sample. Lab test shall verify an iodine removal eff. of 95 percent for radioactive methyl iodine and it shall be in accor. w/ ASTM D3803-1989 at a test media temperature of 30°C.	Char. media from those plen. shall be lab tested at a freq. not to exceed 18 mo. Sample shall be obtained by removing 1 entire bed from an adsorber tray & with drawing a 2" thick x 2" dia. sample. Lab test shall verify an iodine removal eff. of 90 percent for radioactive methyl iodine and it shall be in accor. w/RDT M16-IT para. 4.5.3.	Not Applicable.	02-01 00-01 02-01 00-01 RN 02-034 00-01

Reformatted Per
Amendment 00-01

TABLE 11.3-10

COMPARISON OF RADIONUCLIDE CONCENTRATIONS IN GASEOUS EFFLUENTS TO THE LIMITS OF 10 CFR 20

Isotope	Annual Release (Ci/yr)	(Expected) [1] Site Boundary Concentration (μCi/ml)	Effluent [2] Concentration Limit In Air (μCi/ml)	Ratio of Expected Concentration to Concentration Limit
Kr-85m	15	2.6E-12	1.0E-7	2.6E-5
Kr-85	220	3.7E-11	7.0E-7	5.3E-5
Kr-87	3	5.1E-13	2.0E-8	2.6E-5
Kr-88	22	3.7E-12	9.0E-9	4.1E-4
Xe-131m	13	2.2E-12	2.0E-6	1.1E-6
Xe-133m	45	7.6E-12	6.0E-7	1.3E-5
Xe-133	2700	4.6E-10	5.0E-7	9.2E-4
Xe-135	65	1.1E-11	7.0E-8	1.6E-4
Xe-138	1	1.7E-13	2.0E-8	8.5E-6
I-131	2.3E-2	3.7E-15	2.0E-10	1.9E-5
I-133	2.3E-2	3.7E-15	1.0E-9	3.7E-6
Mn-54	4.3E-4	7.3E-17	1.0E-9	7.3E-8
Fe-59	1.5E-4	2.6E-17	5.0E-10	5.2E-8
Co-58	1.5E-3	2.6E-16	1.0E-9	2.6E-7
Co-60	6.7E-4	1.1E-16	5.0E-11	2.2E-6
Sr-89	3.3E-5	5.6E-18	2.0E-10	2.8E-8
Sr-90	5.9E-6	1.0E-18	6.0E-12	1.7E-7
Cs-134	4.3E-4	7.3E-17	2.0E-10	3.7E-7
Cs-137	7.4E-4	1.3E-16	2.0E-10	6.5E-7
C-14	8	1.3E-12	3.0E-9	4.3E-4
H-3	580	9.7E-11	1.0E-7	9.7E-4
Ar-41	25	4.2E-12	1.0E-8	4.2E-4
			TOTAL	3.5E-3

RN 02-028

(1) Expected concentration in worst sector averaged over a one-year period.
(2) From 10 CFR 20, Appendix B, Table 2, Column 1.

TABLE 11.3-11

SUMMARY OF CALCULATED GASEOUS PATHWAY DOSES
VIRGIL C. SUMMER NUCLEAR STATION

Pathway	Location	Age Group	Organ Receiving Maximum Dose: Organ	Organ Receiving Maximum Dose: Dose (mrem/yr)	Total Body Dose (mrem/yr)
Cloud Submersion	Nearest Residence (1.1 Miles ESE)	All	Skin	2.8E-1	1.1E-1
Ground Plane Contamination	Nearest Residence (1.1 Miles ESE)	All	Skin	9.8E-3	8.4E-3
Air Inhalation	Nearest Residence (1.1 Miles ESE)	Adult	Thyroid	8.6E-2	5.8E-2
		Teen	Thyroid	5.5E-2	3.2E-2
		Child	Thyroid	6.3E-2	3.2E-2
		Infant	Thyroid	8.7E-2	3.4E-2
Vegetable Ingestion	Nearest Residence (1.1 Miles ESE)	Adult	Bone	7.4E-1	2.7E-1
		Teen	Thyroid	4.4E-1	3.4E-1
		Child	Thyroid	8.7E-1	7.1E-1
Cow Milk Ingestion	Nearest Cow (1.5 Miles WSW) (Not now milked)	Adult	Thyroid	3.5E-1	5.3E-2
		Teen	Thyroid	5.2E-1	7.5E-2
		Child	Thyroid	1.0E-0	1.6E-1
		Infant	Thyroid	2.4E-0	3.2E-1
Meat Ingestion	Nearest Cow (1.5 Miles WSW)	Adult	Bone	1.4E-1	3.7E-2
		Teen	Thyroid	3.3E-2	2.6E-2
		Child	Thyroid	5.7E-2	4.6E-2

TABLE 11.3-12

APPENDIX I CONFORMANCE SUMMARY TABLE
VIRGIL C. SUMMER NUCLEAR STATION
GASEOUS EFFLUENTS

	Appendix I Criteria		Virgil C. Summer Nuclear Station		
Type of Dose	Design Objective [1]	Point of Dose Evaluation	Calculated Dose	Point of Dose Evaluation [9]	
Gaseous Effluents [3]					
Gamma dose in air	10 mrad/yr per site	Location of the highest dose offsite [2]	0.29 mrad/yr	Location of highest annual average concentration at the site boundary (SE at 1 mile)	02-01
Beta dose in air	20 mrad/yr per site	Same as above	0.62 mrad/yr	Same as above	02-01
Dose to total body	5 mrem/yr per site	Location of the [2] highest dose offsite	0.11 mrem/yr	Nearest residence (ESE at 1.1 miles)	
Dose to skin of an individual	15 mrem/yr per site	Same as above	0.28 mrem/yr	Same as above	
Radioiodines and Particulates [5] Released to the Atmosphere					
Dose to any organ from all pathways	15 mrem/yr per site	Location of the [6] highest dose offsite	2.49 mrem/yr [8]	Nearest cow [7] (WSW at 1.5 miles)	

TABLE 11.3-12 (Continued)

APPENDIX I CONFORMANCE SUMMARY TABLE VIRGIL C.
SUMMER NUCLEAR STATION
GASEOUS EFFLUENTS

---

(1) Design objectives as specified in the Commission's Appendix I Conformance Option, 40 FR 40816, September 4, 1975.

(2) Evaluated at a location that is anticipated to be occupied during plant lifetime or evaluated with respect to such potential land and water usage and food pathways as could actually exist during the term of plant operation.

(3) Calculated only for noble gases.

(4) Evaluated at a location that could be occupied during the term of plant operation.

(5) Doses due to carbon-14 and tritium intake from terrestrial food chains are included in this category.

(6) Evaluated at a location where an exposure pathway actually exists at time of licensing. However, if the applicant determines design objectives with respect to radioactive iodine on the basis of existing conditions and if potential changes in land and water usage and food pathways could result in exposures in excess of the guideline values given above, the applicant should provide reasonable assurance that a monitoring and surveillance program will be performed to determine: 1) the quantities of radioactive iodine actually released to the atmosphere and deposited relative to those estimated in the determination of design objectives; 2) whether changes in land and water usage and food pathways which would result in individual exposures greater than originally estimated have occurred; and 3) the content of radioactive iodine and foods involved in the changes, if and when they occur.

(7) Cows are not currently milked at this location. Doses evaluated were based on the assumption that pathways could reasonably be expected to exist during plant life.

(8) Dose to an infant thyroid from air inhalation and cow milk ingestion.

(9) Points given correspond to points of dose evaluation under Appendix I heading.

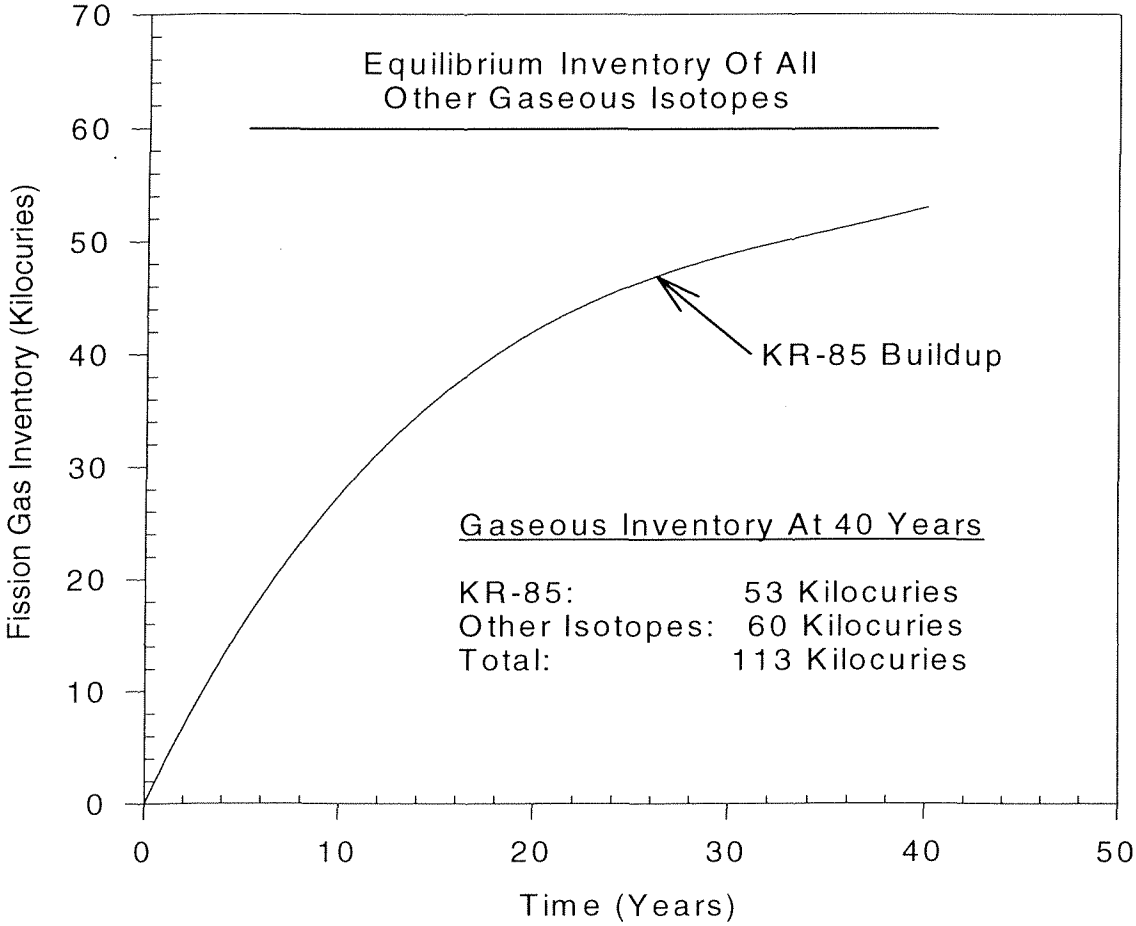

RN
02-025

RN 02-025
July 2002

SOUTH CAROLINA ELECTRIC & GAS CO
VIRGIL C. SUMMER NUCLEAR STATION

Gaseous Waste Processing System Fission Gas Accumulation Based on Continuous Core Operation at 2958 Mwt with 1% Fuel Defects and 60 gpm Continuous Letdown

Figure 11.3-1

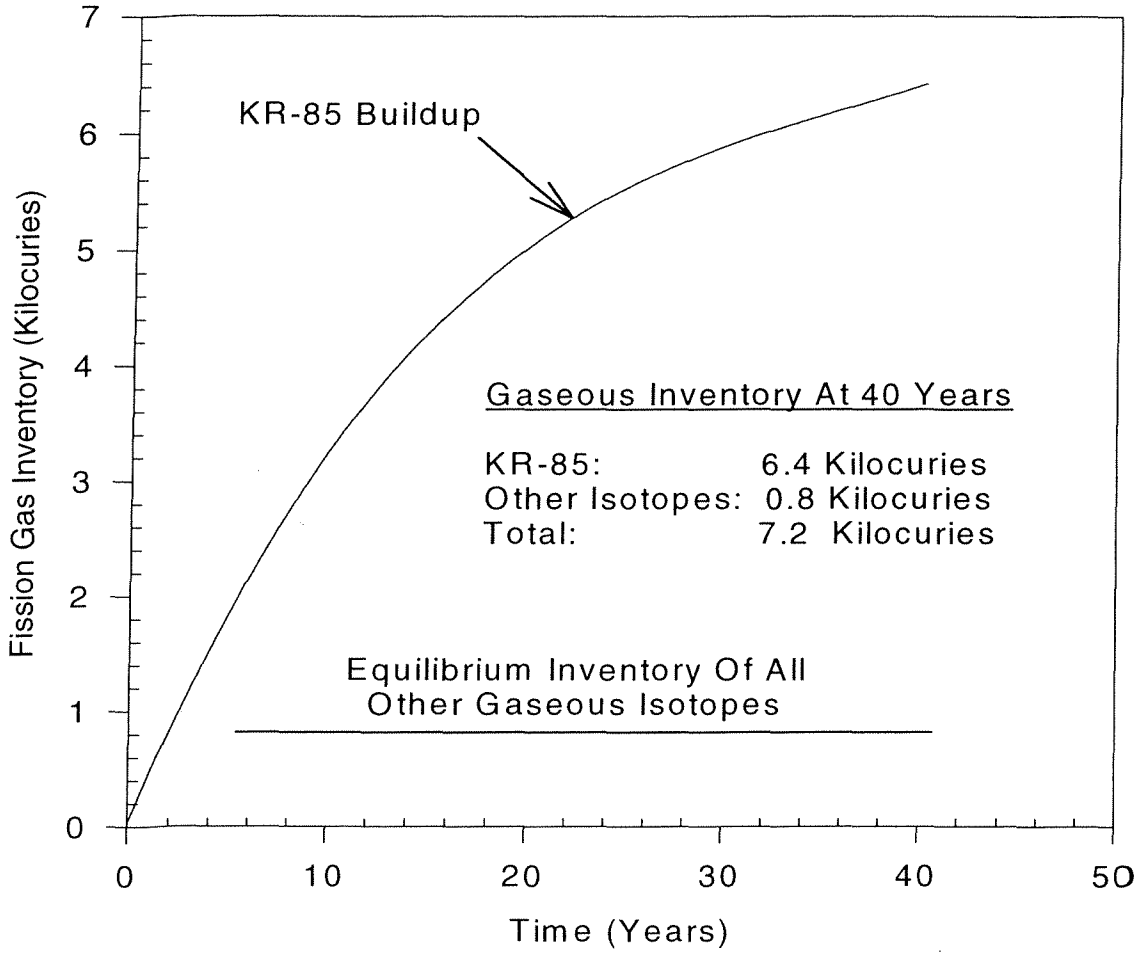

RN
02-025

RN 02-025
July 2002

SOUTH CAROLINA ELECTRIC & GAS CO
VIRGIL C. SUMMER NUCLEAR STATION

Estimated Gaseous Waste Processing System Fission Gas Accumulation Based on Table 11.1-5 and Full Power Operation at 2958 Mwt and 60 gpm Continuous Letdown

Figure 11.3-2

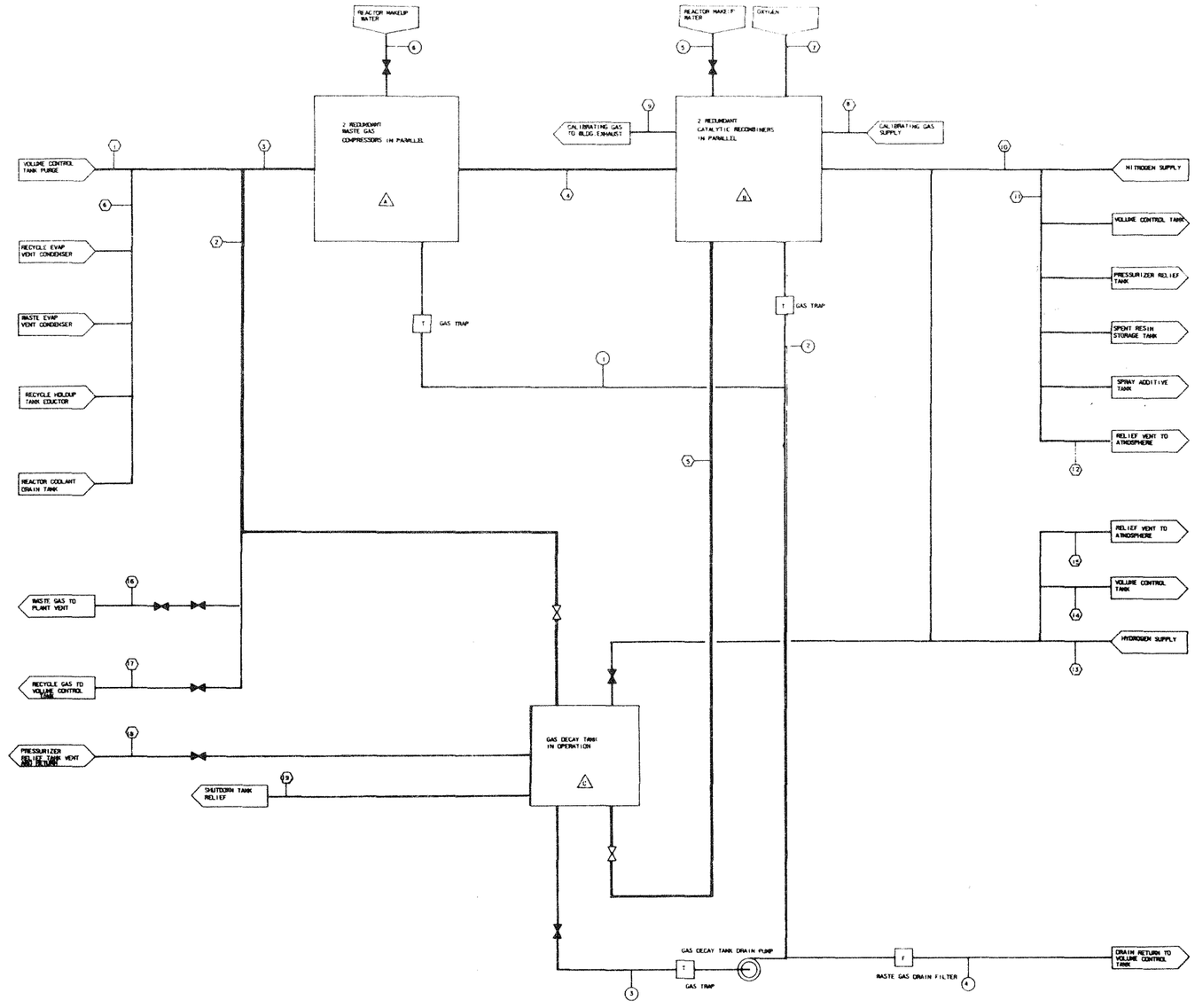

Amendment 0
August 1984

SOUTH CAROLINA ELECTRIC & GAS CO.
VIRGIL C. SUMMER NUCLEAR STATION

Gaseous Waste Processing System
Process Flow Diagram

Figure 11.3-3

FSAR FIGURE REFERENCE

FIGURE 11.3-4, Sheet 1

DRAWING E-302-741

FSAR FIGURE REFERENCE

FIGURE 11.3-4, Sheet 2

DRAWING E-302-743

FSAR FIGURE REFERENCE

FIGURE 11.3-4, Sheet 3

DRAWING E-302-742

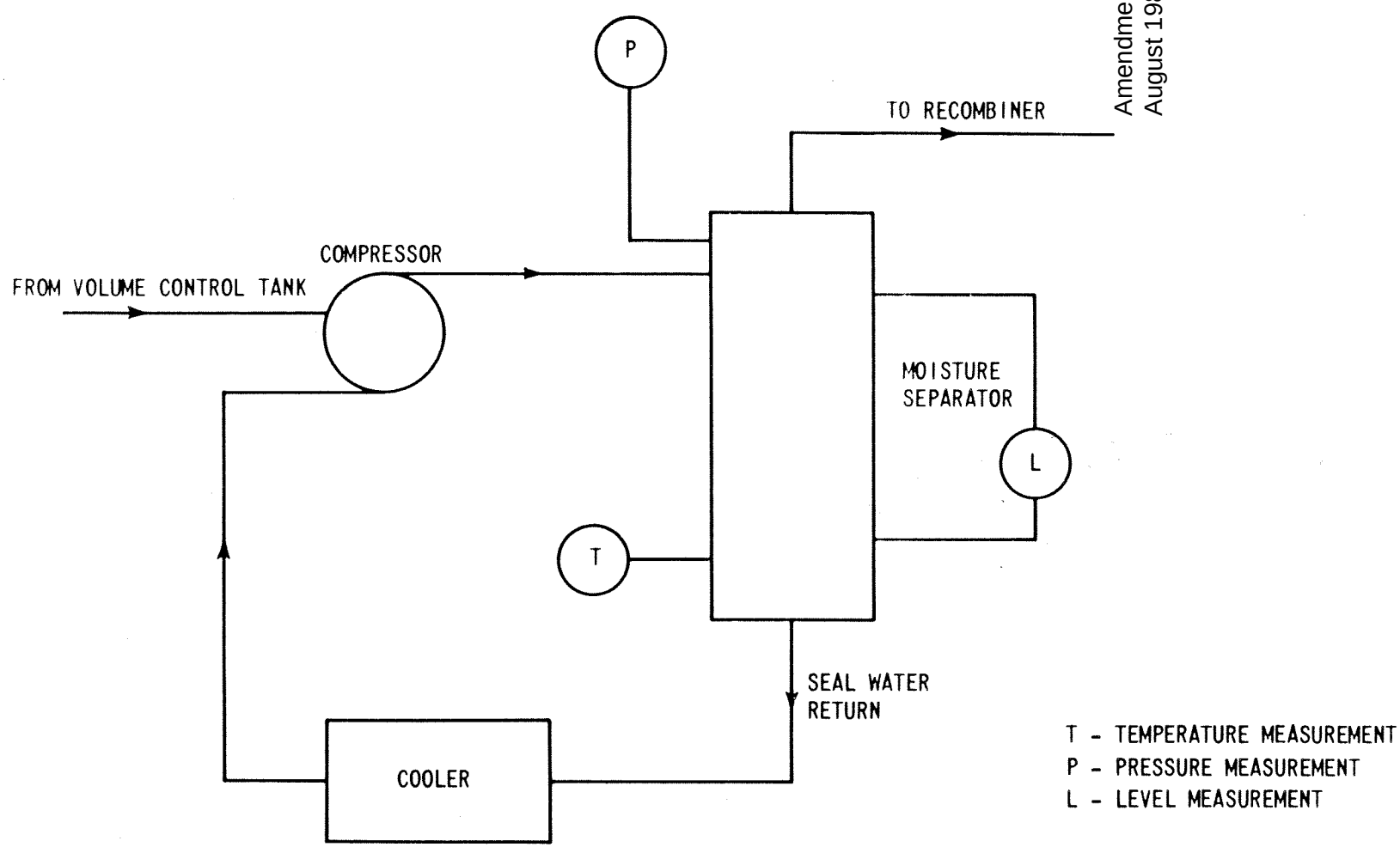

Amendment 0
August 1984

SOUTH CAROLINA ELECTRIC & GAS CO.
VIRGIL C. SUMMER NUCLEAR STATION

Waste Gas Compressor Package

Figure 11.3-5

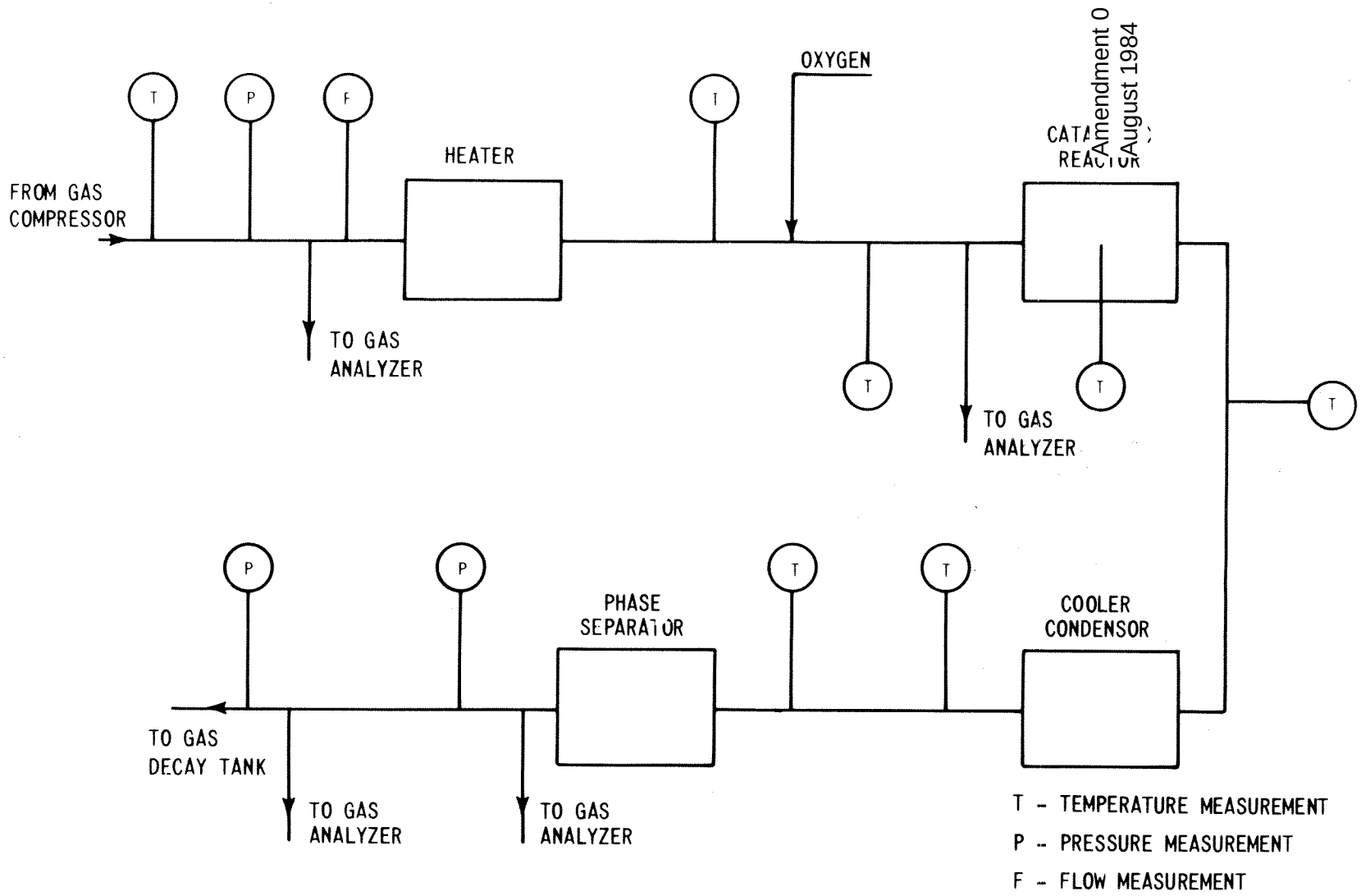

Amendment 0
August 1984

SOUTH CAROLINA ELECTRIC & GAS CO.
VIRGIL C. SUMMER NUCLEAR STATION

Catalytic Hydrogen Recombiner Package

Figure 11.3-6

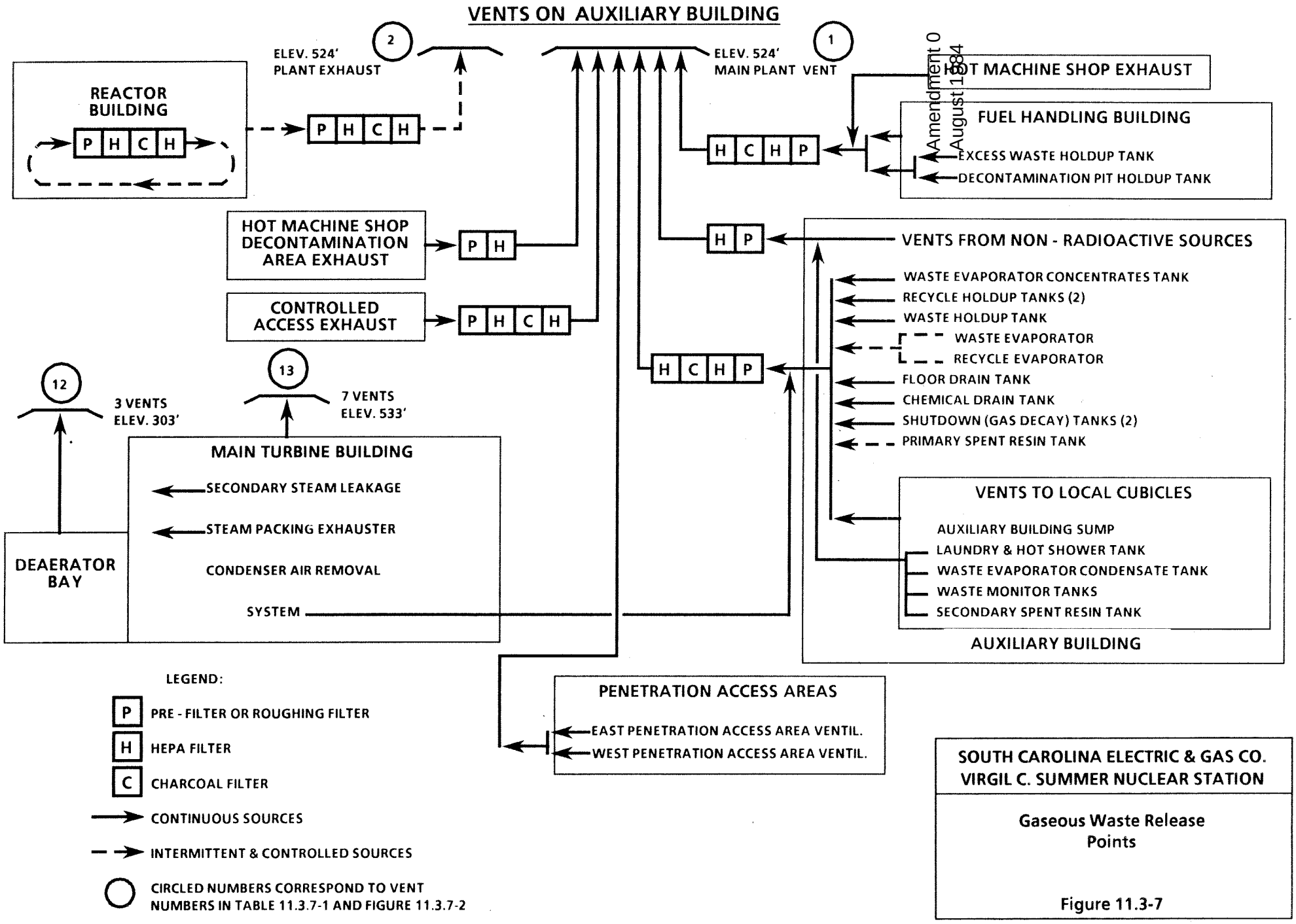

Amendment 0
August 1984

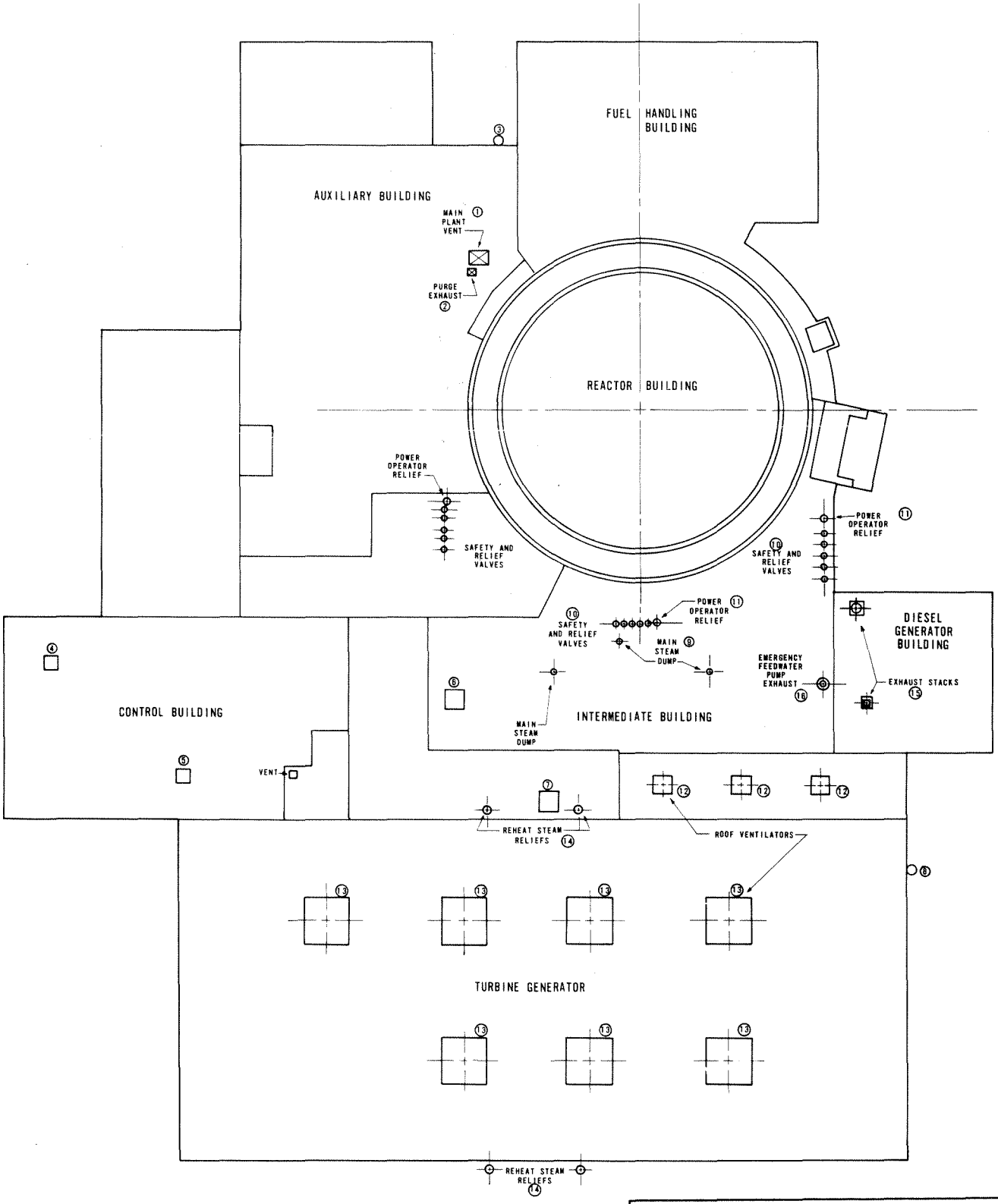

SOUTH CAROLINA ELECTRIC & GAS CO.
VIRGIL C. SUMMER NUCLEAR STATION

Potentially Radioactive Gaseous Waste Release Points

Figure 11.3-8

Amendment 0
August 1984

11.4 PROCESS AND EFFLUENT RADIOLOGICAL MONITORING SYSTEMS

Radiation monitors and analysis of samples are used to monitor process and effluent streams in order to record and control releases of radioactive materials generated as a result of normal operations, including anticipated operational occurrences, and during postulated accidents. The general description and approximate ranges of radiation monitors that measure, indicate, and record the activity of process and effluent streams in the plant are tabulated in Table 11.4-1. Additional radiation monitors are discussed in Sections 12.1.4 and 12.2.4. More detailed information on instrument ranges may be found in Health Physics procedures. 02-01 02-01

11.4.1 DESIGN OBJECTIVES

Major and potentially significant effluent discharge paths for release of radioactive material during normal reactor operation, including anticipated operational occurrences, are monitored as required by General Design Criterion 64. These effluent discharge paths are as follows:

1. Major Effluent Discharge Paths

    a. Reactor Building purge exhaust

    b. Plant vent exhaust (including the gaseous waste discharge)

    c. Liquid waste discharge

2. Potentially Significant Effluent Discharge Paths

    a. Condenser exhaust

    b. Nuclear Blowdown waste effluent

    c. Steam Generator Blowdown

    d. Turbine room sump

    e. Condensate Polish Backwash Tank effluent

Additionally, samples of these effluents are required for laboratory analysis to allow evaluation of the measured releases and compliance with the reporting requirements of Regulatory Guide 1.21 (see Appendix 3A). Monitoring and analysis of samples provide information useful in complying with the objectives of Appendix I to 10 CFR 50.

Process systems which do not discharge to the environment are monitored to permit identification of possible system or equipment malfunction through detection of activity levels in the system. The systems monitored are the following:

1. Component Cooling Water

2. Primary Coolant Letdown

3. Spent Fuel Cooling Water

RN 07-037

The Radiation Monitoring System continuously monitors the normal plant effluent discharge paths under steady-state, transient, or accident condition. After an accident the system provides information to aid in determining the magnitude of the accident. Locations where permanently mounted monitors are not provided are monitored periodically with portable instruments. Radiation monitoring, effluent flow measurements and meteorological instrumentation provide data which, under emergency procedures, determine the direction and rate of movement of radioactive effluents.

The monitors located in the normal plant effluent discharge paths, area gamma monitors, and manual sampling provide information on the rate and location of releases.

Radiation monitoring, analysis of samples, and Health Physics surveillance provide data used for assuring compliance with the requirements of 10 CFR 20.

Utilization of off-line process monitors provides improved access for maintenance and inspection. Remotely actuated check sources for the radiation monitor detectors facilitate routine functional verification. Detector assemblies are removable in the event that extensive maintenance is required. Decontamination of process monitors is facilitated by use of appropriate taps or valving to allow flushing or cleaning.

Expected process flow, composition, and contamination are a function of the specific process system being monitored and are discussed in the Section where the system is discussed.

11.4.2 CONTINUOUS MONITORING

Measurement data from the effluent radiation monitors and the analysis of samples by laboratory equipment (see Section 11.4.3) provide information used to comply with Regulatory Guide 1.21 (see Appendix 3A) and for evaluation of the releases to the environment.

Measured activity levels are indicated and recorded on the Radiation Monitoring control panel located in the Control Room (except RM-L8 and RM-L11). Local indication at or near the detector location is provided for each channel. The turbine room sump radiation monitor, RM-L8, is equipped for local indication, recording, and high level alarm and also actuates an alarm in the Control Room. If radiation discharge limits are exceeded, the sump pumps are automatically tripped and the flow path may be aligned to discharge to the Excess Liquid Waste System.

The condensate polish backwash effluent radiation monitor RM-L11 is equipped for local indication, recording, and high level alarm. Alarm is also provided through the local control panel for the condensate polishing system. A high radiation alarm will trip the backwash tank discharge pumps.

Detectors have remotely actuated check sources to provide functional verification. In addition, the monitoring channels are routinely calibrated by exposure to a calibrated test source for verification against initial calibration curves. Radiation monitor detection range is based upon the type of fluid being monitored for activity, the capability of commercial instrumentation, and the function of the monitor. Each rate meter is equipped with two adjustable alarm levels (alert and high) and a channel failure/loss of power alarm. These alarms, except for movable monitors, are annunciated on the Radiation Monitoring System control panel in the Control Room. Channels which have an interlock function with other systems (see Figure 11.4-1) are provided with a bypass switch for use during maintenance or testing. Use of the bypass switch is annunciated. Reliable power for the fixed, process, and effluent radiation monitoring instrumentation is obtained from the diesel backed, 120 volt instrument bus. Associated sample pumps obtain power from the 480 volt diesel backed bus. Radiation monitors RM-L8 and RM-L11 are powered by local 120 volt a-c power.

Individual ratemeter power supplies are independent of each other. The reliable a-c power source is divided between two trains (see Table 11.4-1) to provide a high degree of availability.

Specific instrumentation channels used for process and effluent monitoring are as follows:

1. Primary Coolant Letdown Monitor, Channel RM-L1

   A sample of the primary coolant letdown from the Nuclear Sampling System is monitored by this channel utilizing an off-line monitor located outside the Reactor Building (see Figure 9.3-4). The sample is delayed to allow decay of N16 activity. Two detectors, overlapping in ranges, as shown by Table 11.4-1, are used to obtain a wide measuring range, from approximately 1×10^{-3} μCi/cc to 10^{3} μCi/cc, based upon Cs-137. 02-01

The reactor coolant gross gamma activity resulting from instantaneous mixing of fission products from a small fraction of one fuel rod at equilibrium causes a net signal increase approximately equal to the signal produced by 1 percent failed fuel within four minutes. The contribution to gross gamma activity from corrosion products and tramp uranium is minor compared to that from 1 percent failed fuel. 02-01

The alarm setpoint is established at a level such that any sudden increase above the normal or expected operational reactor coolant activity is suspected as being due to gross fuel failure. Analyses of a manual sample provide verification of compliance with Technical Specifications and indicates any action to be taken.

No automatic interlock functions are served by this channel. If the detector is not available, the sampling frequency is increased. Loss of sample flow is annunciated in the Control Room. 02-01

Use of two detectors, scintillation and Geiger-Mueller (G-M), and two alarm modules provides a high level of availability. 02-01

2. Component Cooling Water Monitors, Channels RM-L2A and RM-L2B

Each of the two Component Cooling Water loops (see Figure 9.2-4) is equipped with an off-line, shielded sampler having a gamma sensitive scintillation detector for measurement of gross gamma activity in a sample of the cooling water. These monitors detect leakage of radioactivity into the Component Cooling Water and cause an alarm to sound upon detection of excessive activity levels. Sensitivity and range of these monitors is approximately 2×10^{-6} to 2×10^{-2} μCi/cc, Cs-137. 02-01

High activity, approximately one decade above normal background, causes an alarm and initiates closure of the Component Cooling Water surge tank vent valve. Laboratory analysis of a Component Cooling Water sample is used to verify the cause of an alarm and the extent of leakage into the Component Cooling Water loop.

3. Steam Generator Blowdown Monitor, Channel RM-L3

A fluid sample from the combined Steam Generator Blowdown (see Figure 10.4-13) is passed through a shielded, off-line sampler having a gamma sensitive scintillation detector for measurement of gross gamma activity. This monitor is used to detect primary to secondary leakage and sound an alarm upon detection. Design, sensitivity and range are similar to RM-L2A.

High activity causes an alarm and initiates valve operations to divert blowdown flow to the Nuclear Blowdown holdup tank. Laboratory analysis of Steam Generator Blowdown samples is used to verify the alarm condition.

4. Spent Fuel Cooling Water, Channel RM-L4

A sample of Spent Fuel Cooling Water (see Figure 9.1-3) is monitored by a shielded, off-line sampler using a gamma sensitive scintillation detector for measurement of gross gamma activity. Alarms are sounded upon detection of excessive activity. Design, sensitivity, and range are similar to RM-L2A.

The monitor alarms alert the operator to an increase of activity. Such an increase is then verified by laboratory analysis of a manual grab sample.

5. Liquid Waste Effluent Monitor, Channel RM-L5

An off-line monitor is used to sample the Liquid Waste effluent. A lead shielded sampler with a gamma sensitive scintillation detector is located upstream of the discharge dilution point for measurement of effluent gross gamma activity (see Figure 11.2-2, Sheet 4). Sensitivity and range are similar to RM-L2A.

High effluent activity causes an alarm and initiates closure of the waste processing discharge valve. The activity level at which this interlock is actuated is adjustable based upon the activity level of an analyzed sample of the waste batch and/or dilution flow available. The activity and dilution flow are evaluated prior to discharge. A high level alarm is also provided at the local Liquid Waste System control panel.

6. Boron Recycle System Monitor, Channel RM-L6 **--NO LONGER IN SERVICE--**

A sample of the discharge (see Figure 9.3-18) from the Boron Recycle System recycle evaporator condensate filter to the reactor makeup storage tank is monitored by an off-line, shielded sampler. This sampler uses a gamma scintillation detector to measure gross gamma activity. Sensitivity and range are similar to RM-L2A.

RN 07-037

High activity in the recycle evaporator condensate filter discharge to the reactor makeup storage tank causes an alarm and initiates diversion of the discharge flow from the reactor makeup storage tank to the recycle evaporator. Laboratory analysis of a sample is used to verify the alarm condition.

7. Nuclear Blowdown Waste Effluent Monitor, Channel RM-L7

A sample of the discharge (see Figure 10.4-14) from the Nuclear Blowdown Processing System is monitored for gross gamma activity by a shielded, gamma sensitive detector. This off-line monitor is used to detect excessive activity releases from the Nuclear Blowdown Processing System. Alarms are sounded upon detection of such releases. Design, sensitivity, and range are similar to RM-L2A.

High activity causes alarms and initiates valve operations to terminate discharge and divert the flow to the Nuclear Blowdown Processing System monitor tank. Laboratory analysis of the process discharge fluid is used to verify alarm conditions. The alarm setpoint is based upon the maximum release activity and dilution of the discharge stream.

8. Turbine Room Sump Monitor, Channel RM-L8

A sample of the turbine room sump discharge is monitored by a shielded gamma scintillation detector to provide local measurement, indication, and alarm of gross gamma activity. The monitor sample valve is opened and the 120 volt a-c sample pump is started when the turbine room sump pumps are operated. A high activity alarm annunciated in the control room, stops the sump pumps. Sensitivity and design are similar to those of the other fixed liquid monitors.

9. Main Plant Vent Exhaust Monitor, Channel RM-A3

This channel monitors particulate, iodine, and gaseous activity released through the main plant vent from the Auxiliary Building. The particulate detector, a beta scintillator, has a sensitivity and range of approximately 10^{-11} to 10^{-7} μCi/cc, Cs-137. The iodine detector, a gamma scintillator, has a sensitivity and range of approximately 2 x 10^{-11} to 10^{-7} μCi/cc,, I-131. The gas detector, a beta scintillator, has a sensitivity and range of approximately 2.6 x 10^{-6} to 2 x 10^{-2} μCi/cc, Kr-85. 02-01 RN 03-011

A particulate collection filter with an efficiency of 90 percent for particles 0.3 microns or larger is provided and is removable for laboratory analysis. A charcoal filter cartridge, removable for laboratory analysis and having an efficiency of 95 percent for elemental iodine, is also provided.

The plant vent discharge sample is taken downstream of the filtering units by a nozzle located near the point of discharge to the environment (see Figure 9.4-9). Sample nozzle flow is adjusted to be isokinetic at a nominal discharge flow rate (227,588 cfm) from the vent stack.

The pumping station and the three shielded detection channels are located on the floor below the sampling point to minimize sample line losses. This pumping station is equipped with two pumps to permit continued operation when pump maintenance is required.

Should the gaseous activity released through the main plant vent reach or exceed the Hi-Rad setpoint, the gaseous activity detection channel initiates closure of the Waste Gas decay tank discharge valve. RN 02-019

The RM-A3 setpoints are estimated by plant procedures to ensure that the site boundary dose limits specified in the ODCM are not exceeded.

Radiation monitor RM-A3 utilizes detectors which are 4-Pi shielded with 3-inches of lead to minimize the effect of the background radiation in normal operation in an environment as listed in Table 3.11-3.

10. Reactor Building Purge Exhaust Monitor, RM-A4

This monitor measures particulate, iodine, and gaseous activity in the discharge of the Reactor Building Purge Exhaust System during purging operations. This monitor is similar to RM-A3 with respect to its description, range, and sensitivity.

The monitored sample is obtained through an isokinetic nozzle located in the purge exhaust duct upstream of the discharge point (see Figure 9.4-28). The monitor is located on the floor below the duct to minimize sample line loses. The monitor obtains its sample from either of two sample probes in the discharge duct. One probe is isokinetic at the design discharge flow rate (20,000 CFM), the other probe is isokinetic at the design low flow rate. The duct flow rate is measured and indicated in the Control Room. Under operating conditions where this flow is more than 10% below design conditions, the data collected by RM-A4 will be corrected for an isokinetic sampling in accordance with ANSI 13.1 1969 Appendix C. Appendix C implies that an isokinetic correction for particle sizes less than 4 microns does not need to be considered. Particles penetrating the containment HEPA filters are normally less than 0.3 microns. 02-01

Should an unplanned gaseous activity release rate of approximately 4×10^1 μCi/sec, Kr-85, be exceeded, this monitor initiates closure of the Reactor Building purge valves. This activity release rate is based upon a flow rate of 20,000 cfm through the Reactor Building purge vent and a gaseous activity level setpoint of approximately two times the expected background at the monitor location. Such a setpoint provides for rapid detection of any unplanned release. 02-01

The alarm setpoints for particulate and iodine activity are estimated by plant procedures to ensure that the site boundary dose limits specified in the ODCM are not exceeded. RN 02-019

Alarm setpoints may be readjusted prior to commencement of Reactor Building purging based upon existing activity levels within the Reactor Building.

Radiation monitor RM-A4 utilizes detectors which are 4-Pi shielded with 3-inches of lead to minimize the effect of the background radiation in normal operation in an environment as listed in Table 3.11-3.

The gamma dose rate from the charcoal cartridge located inside the atmospheric monitor (RM-A4) shield assembly at a distance of one foot is approximately 2.8 mr/hr, assuming a sample activity of 10^2 μCi/cc, sample flow of 1 cfm, 95% collection efficiency, average E of 0.5 Mev, and 30 minutes collection time. 02-01

11. Condenser Exhaust Monitor, RM-A9

This monitor is a shielded, off-line unit with a gamma scintillation detector which monitors gaseous samples taken from the condenser exhaust discharge line (see Figure 10.4-1). Its purpose is detection of primary to secondary system leakage. Range of this monitor is approximately 2×10^{-6} to 2×10^{-2} μCi/cc, Xe-133. This range combined with a design discharge flow rate of 40 cfm permits monitoring of an activity discharge rate of 7.5×10^{-2} to 7.5×10^{2} μCi/sec. RN 03-011

12. Waste Gas Discharge Monitor, Channel RM-A10

This monitor is a shielded beta scintillation detector which monitors and controls the gaseous activity released from the Waste Gas decay tanks. Sensitivity and range of this monitor are approximately 2×10^{-4} to 2 μCi/cc, Xe-133. RN 03-011

Detection of high gaseous activity initiates closure of the Waste Gas decay tank discharge valve. Prior to a planned Waste Gas decay tank release, the alarm setpoint may be readjusted according to analyzed activity level existing in the Waste Gas decay tanks.

13. Main Plant Vent Exhaust High Range Gas Discharge Monitor, Channel RM-A13

This monitor (see Figure 11.4-2) provides extended range backup to channel RM-A3. The monitor utilizes an ion chamber gamma sensitive detector with a sensitivity and range of approximately 10^{-2} to 10^{+5} μCi/cc, XE-133. Detection of high activity provides an alarm, indication, and a record of excessive gas activity released through the main plant vent exhaust. The energy dependence is $\pm$ 10% from 80 kev to 3 mev. Background correction is achieved by a 2-inch lead shield which reduces background and provides collimation of the detector to respond to the gamma radiation from the exhaust duct. RN 03-011

Graphs will be available to operating personnel to reflect the readout of RM-A13 versus the curie concentration for a given release and an assumed isotopic mixture of the effluent.

14. Liquid Waste Effluent Monitor, Channel RM-L9

An off-line monitor is used to sample the Liquid Waste effluent to the penstocks. A lead shielded sampler with a gamma sensitive scintillation detector is located downstream of radiation monitor RM-L5 to monitor the discharge from the Liquid Waste Processing System or the discharge from the Nuclear Blowdown Processing System. Sensitivity and range of this monitor are similar to RM-L2A.

High effluent activity actuates an alarm and initiates closure of the waste discharge valve, thus terminating flow to the penstocks. The activity level at which this interlock is actuated is adjusted to limit the maximum permitted activity of the discharge to the penstocks and to provide backup for radiation monitors RM-L5 and RM-L7.

15. Steam Generator Blowdown Discharge Monitor, Channel RM-L10

A fluid sample from the Steam Generator Blowdown discharge to the Circulating Water System is passed through a shielded, off-line sampler having a gamma sensitive scintillation detector for measurement of gross gamma activity. This monitor is used to terminate the discharge flow to the Circulating Water System in the event of primary to secondary leakage in the steam generators. Design, sensitivity, and range of this monitor are similar to RM-L2A.

High activity actuates an alarm and initiates valve closure to terminate Steam Generator Blowdown flow to the Circulating Water System. This monitor backs up radiation monitor RM-L3. Laboratory analysis of Steam Generator Blowdown samples is used to verify the alarm condition.

16. Purge Exhaust Effluent High Range Radiation Monitor, Channel RM-A14

This monitor (see Figure 11.4-2) provides extended range backup to channel RM-A4. The monitor utilizes an ion chamber gamma sensitive detector with a sensitivity and range of approximately 10^{-2} to 10^{+5} μCi/cc, Xe-133. Detection of high activity provides an alarm, indication, and a record of excessive gas activity released through the purge vent exhaust. The energy dependence is $\pm$ 10% from 80 kev to 3 mev. Background correction is achieved by a 2-inch lead shield which reduces background and provides collimation of the detector to respond to the gamma radiation from the exhaust duct. RN 03-011

Graphs will be available to operating personnel to reflect the readout of RM-A14 versus the curie concentration for a given release and an assumed isotopic mixture of the effluent.

17. Steam Line High Range Monitors, Channels RM-G19A, B and C

Each Main Steam line header, upstream of the relief valves (2806-MS) is provided with a high range gamma sensitive monitor to provide indication of the steam activity in the event of a release equivalent to 2 curies/sec/MW_{th} of Xe-133.

These monitors are responsive to 0.1 mr/hr up to 10^7 mr/hr gamma with a flat response of $\pm$ 10% from 80 KeV to 3 MeV. The anticipated dose response, calculated for the detector due to an equivalent concentration of Xe-133 in the discharge effluent from the steam line is 6.1 x 10^{-1} mr/hr/μCi/cc. Background correction for each monitor is achieved by 2-inch lead shielding to reduce background and provide collimation of the detector to respond to the gamma radiation from the steam line. 02-01

18. Condensate Polish Backwash Effluent Monitor, Channel RM-L11

A sample of the recirculated or batch discharge fluid from the Condensate Polish System backwash receiver tank is monitored for gross gamma activity by an off-line liquid radiation monitor, RM-L11 (see Figure 10.4-7a). Sensitivity is approximately 1 x 10^{-6} μCi/cc referenced to Cs-137. Indication, alarms, and recording are provided locally. 02-01

Interlocks are provided to trip the backwash pumps upon a high activity alarm. The activity of the fluid is evaluated prior to discharge. Alarm is also provided at the local Condensate Polish System control panel.

As agreed with the NRC Staff, this monitor is required to be installed prior to startup after the first refueling.

11.4.3 SAMPLING

The requirements of General Design Criterion 64 are satisfied with respect to effluent discharge paths as stated below.

Radiation monitoring is accomplished using the Radiation Monitoring System and laboratory analysis of samples in accordance with Regulatory Guide 1.21 (see Appendix 3A).

Table 11.4-2 presents normal and potential discharge paths from the plant and lists the monitoring and analyses performed. The frequency of sampling is increased should abnormal levels of activity be detected.

Effluent monitors RM-L5, RM-L11 and RM-A10 provide backup control of the administrative release of liquid and gaseous waste. These batch releases are analyzed and evaluated prior to discharge. Main plant vent exhaust monitor RM-A3 provides additional backup to the Waste Gas discharge monitor RM-A10.

Ventilation discharge effluent monitors RM-A3 (main plant vent exhaust) and RM-A4 (Reactor Building purge exhaust) provide removable particulate filters and charcoal cartridges for laboratory analyses which allow evaluation of normal and/or abnormal releases.

Continuous effluent discharge radiation monitor (RM-A3, RM-A9 and RM-L7) readings of gas or liquid activity would be affected by abnormal background directly following a LOCA and would, at that time, indicate a higher gas or liquid activity than was actually being discharged. This would result only in the possibility of premature actuation of interlocks or alarms. Use of portable instrumentation, sample analysis, and appropriate emergency procedures, as well as the radiation monitors, permits evaluation of the plant discharge to the environment under accident conditions.

Liquid effluent monitor RM-L7 (Nuclear Blowdown waste) diverts the process discharge upon detection of excessive gross gamma activity. A manual sample of the diverted discharge fluid is analyzed in the laboratory for evaluation of the isotopic content.

Primary to secondary leakage is detected by the condenser exhaust monitor, RM-A9. Additional backup information is provided by the steam generator liquid blowdown monitor, RM-L3. Subsequent analysis of liquid samples in the laboratory provide verification.

In the event of simultaneous primary to secondary and turbine leaks, the Turbine Building Ventilation System and Floor Drain System become potential discharge points. Portable monitors and manual samples are used to determine the rate of release.

Liquid radiation monitor, RM-L8, monitors turbine room sump discharge and stops the sump pumps upon occurrence of a high radiation alarm.

The ventilation exhaust from the Intermediate Building is not considered a potential discharge point due to a lack of potential sources within this building. Routine Health Physics surveillance with portable monitors and analysis of particulate portable sampler filters are used for verification.

General Design Criterion 60 is satisfied by use of interlock circuits which are illustrated by Figure 11.4-1. In addition, alarms resulting from detection of high activity alert the operator to the need for appropriate action.

Requirements of General Design Criterion 63, with respect to the monitoring of radiation levels in radioactive waste process systems, are satisfied by use of the effluent and process radiation monitoring instrumentation, area gamma monitoring, Health Physics surveillance with portable instruments, and laboratory analysis of process samples.

11.4.4 INSERVICE INSPECTION, CALIBRATION, AND MAINTENANCE

The analyses of radioactive effluents are performed in accordance with requirements set forth in Regulatory Guide 1.21 (see Appendix 3A). Inplant laboratory facilities for these analyses include a separate sample room, radiochemistry laboratory, and count room located in the Control Building. Appropriate equipment for the safe handling of samples and standards is provided. Count room equipment includes the following:

1. Germanium detectors
2. Liquid scintillation counter
3. Gross alpha counter
4. Appropriate shielding for detection devices
5. Multichannel analyzers
6. Data reduction and storage system

Detailed written analytical laboratory procedures are provided to assure compliance with sensitivity, accuracy, and reproducibility requirements within the capabilities of commercially available equipment.

The schedule for routine calibration of laboratory equipment used for effluent sample analysis is detailed in such a manner as to assure the continuing accuracy of measurements. Calibration performance for the various equipment is closely monitored to determine if malfunction due to procedural difficulties or minimal equipment failure have occurred and, where applicable, whether equipment maintenance is required. Functional checks of equipment performance are performed on a more frequent basis than is calibration in accordance with written laboratory procedures. These checks use materials with the accuracy, stability, and range (though not necessarily traceable to the National Institute of Standards and Technology) necessary to assure a timely indication of equipment operational status. Maintenance or readjustment of the laboratory counting equipment is followed by appropriate recalibration. 02-01

Laboratory counting systems used in the analysis of effluent samples are calibrated using specific standards consistent with the particular effluent sample geometry.

The radioactive material in these standards is either certified by the National Institute of Standards and Technology or has been calibrated against standard reference material certified by the National Institute of Standards and Technology. Calibration standards have the accuracy, stability, and range required for the intended use. Detailed written procedures for calibration of laboratory counting equipment and preparation of standards are provided to assure the continuing adequacy of effluent sample measurements. Intercomparison and interlaboratory spiked samples and analyses of such samples provides further assurance of system measurement accuracy. Equipment ancillary to qualification and quantification of effluent samples is also calibrated using detailed written procedures such as those called for in Regulatory Guides 1.21 and 1.23 (see Appendix 3A) to assure analytical accuracy. 02-01

Maintenance of laboratory equipment used in the analysis of effluent samples is performed in accordance with procedures recommended by the equipment manufacturers. Laboratory equipment availability is maximized as follows:

1. The incorporation of modular designs where appropriate

2. Provision of spare parts

3. Interchangeability of certain components within different laboratory counting systems when consistent with design considerations.

The process sampling system is described in Section 9.3.2.

11.4.5 REFERENCES

1. Title 10, Code of Federal Regulations, Part 20, Appendix B, "Concentrations in Air and Water above Natural Background."

TABLE 11.4-1

PROCESS AND EFFLUENT RADIOLOGICAL MONITORS

Monitor	Function	Detector	Power	
RM-L1 Primary Coolant Letdown	Liquid process monitor, detection of gross activity buildup in reactor coolant.	NaI and G-M; Gamma 10^{-3} to 10^{2} μCi/cc & 10^{-1} to 10^{3} μCi/cc, Cs-137	Bus A	
RM-L2A Component Cooling Water Closed Loop A	Liquid process monitor, detection of leakage into component cooling water system.	NaI; Gamma 2×10^{-6} to 2×10^{-2} μCi/cc, Cs-137	Bus A	
RM-L2B Component Cooling Water Closed Loop B	Liquid process monitor, detection of leakage into component cooling water system.	NaI; Gamma 2×10^{-6} to 2×10^{-2} μCi/cc, Cs-137	Bus B	02-01
RM-L3 Steam Generator Blowdown	Liquid process monitor, detection of leakage into steam generators.	NaI; Gamma 2×10^{-6} to 2×10^{-2} μCi/cc, Cs-137	Bus A	
RM-L4 Spent Fuel Cooling Water	Liquid process monitor, detection of pool water contamination.	NaI; Gamma 2×10^{-6} to 2×10^{-2} μCi/cc, Cs-137	Bus B	
RM-L5 Liquid Waste Effluent	Liquid effluent monitor, terminates discharge of waste liquid on detection of excessive activity. Backup to predischarge analysis of liquid waste tank contents.	NaI; Gamma 2×10^{-6} to 2×10^{-2} μCi/cc, Cs-137	Bus B	
-NO LONGER IN SERVICE- RM-L6 Boron Recycle System	Liquid process monitor, diverts discharge on detection of excess activity.	NaI; Gamma 2×10^{-6} to 2×10^{-2} μCi/cc, Cs-137	Bus B	RN 07-037

TABLE 11.4-1 (Continued)

PROCESS AND EFFLUENT RADIOLOGICAL MONITORS

Monitor	Function	Detector	Power	
RM-L7 Nuclear Blowdown Waste Effluent	Liquid effluent monitor, terminates discharge and diverts flow upon detection of excess activity.	NaI; Gamma 2×10^{-6} to 2×10^{-2} μCi/cc, Cs-137	Bus B	
RM-L8 Turbine Room Sump Monitor	Liquid effluent monitor, stops sump pumps upon detection of excessive activity.	NaI; Gamma 2×10^{-6} to 2×10^{-2} μCi/cc, Cs-137	120 Volt	02-01
RM-L9 Liquid Waste Discharge	Effluent liquid monitor, terminates liquid waste discharge to penstocks upon detection of high activity. Provides backup to radiation monitors RM-L5 and RM-L7.	NaI; Gamma 2×10^{-6} to 2×10^{-2} μCi/cc, Cs-137	Bus A	
RM-L10 Steam Generator Blowdown Discharge	Effluent liquid monitor, terminates steam generator blowdown discharge to circulating water system upon detection of high activity. Provides backup to radiation monitor RM-L3.	NaI; Gamma 2×10^{-6} to 2×10^{-2} μCi/cc, Cs-137	Bus B	
RM-L11 Condensate Polish Backwash Effluent	Effluent liquid monitor, terminates backwash discharge pump operation upon detection of high activity. Provides backup to analysis of batch activity.	NaI; Gamma 10^{-6} to 10^{-2} μCi/cc, Cs-137	120v-ac Local	

TABLE 11.4-1 (Continued)

PROCESS AND EFFLUENT RADIOLOGICAL MONITORS

Monitor	Function	Detector	Power	
RM-A3 Main Plant Vent Exhaust	Effluent atmospheric monitor, detects excessive release from auxiliary building exhaust.	Particulate - Beta 4.7×10^{-11} to 10^{-7} μCi/cc, Cs-137 Iodine - NaI; Gamma 2×10^{-11} to 2×10^{-7} μCi/cc, I-131 Gas - Beta 2.6×10^{-6} to 2×10^{-2} μCi/cc, Kr-85	Bus A	
RM-A4 Reactor Building Purge Exhaust	Effluent atmospheric monitor, terminates purge exhaust on detection of excess gas activity.	Particulate - Beta 4.7×10^{-11} to 10^{-7} μCi/cc, Cs-137 Iodine - NaI; Gamma 2×10^{-11} to 2×10^{-7} μCi/cc, I-131 Gas - Beta 2×10^{-6} to 2×10^{-2} μCi/cc, Kr-85	Bus A	RN 03-011
RM-A9 Condenser Exhaust	Effluent gas monitor, detects leakage into steam generator system.	NaI; Gamma 2×10^{-6} to 2×10^{-2} μCi/cc, Xe-133	Bus B	
RM-A10 Waste Gas Discharge	Effluent gas monitor, terminates discharge of waste gas on detection of excess activity. Backup to predischarge analysis of waste gas tank contents.	Gamma 2×10^{-4} to 2 μCi/cc, Xe-133	Bus B	
RM-A13 Main Plant Vent Exhaust, High Range Gas Discharge	Effluent High Range Gas Monitor	Ion Chamber - Gamma Ref. 10^{-2} to 10^{5} μCi/cc, Xe-133 (0.1 to 10^{7} mr/hr)	Bus A	
RM-A14 Purge Exhaust Effluent, High Range	Effluent High Range Gas Monitor	Ion Chamber - Gamma Ref. 10^{-2} to 10^{5} μCi/cc, Xe-133 (0.1 to 10^{7} mr/hr)	Bus A	02-01
RM-G19, A,B,C	Steam Line High Range Gamma Monitor	Ion Chamber - Gamma 0.1 to 10^{7} mr/hr	Bus B	

TABLE 11.4-2

DISCHARGE MONITORING AND ANALYSIS

Normal Discharge Paths	Type of Continuous Monitoring	Samples for Isotopic Analysis	Frequency of Sampling	
Main Plant Vent	RM-A3 Particulate (β) RM-A3 Iodine (γ) RM-A3 Gas (β)	Fixed filter Charcoal cartridge Gas sample from gas decay tank (includes tritium)	Weekly	
Reactor Building Purge	RM-A4 Particulate (β) RM-A4 Iodine (γ) RM-A4 Gas (β)	Fixed filter Charcoal cartridge Gas sample from containment atmosphere (includes tritium)	Before each purge and weekly during a continuous purge (e.g., refueling period)	02-01
Liquid Waste Effluent Discharge	RM-L5 Liquid (γ) RM-L9 Liquid (γ)	Aliquot from holdup tank (includes tritium)	Prior to batch release	
Waste Gas Discharge	RM-A10 Gas (β)	Gas sample from gas decay tank	Prior to batch release	

TABLE 11.4-2 (Continued)

DISCHARGE MONITORING AND ANALYSIS

Normal Discharge Paths	Type of Continuous Monitoring	Samples for Isotopic Analysis	Frequency of Sampling	02-01
Steam Generator Blowdown	RM-L3 Liquid (γ) and/or RM-L10 Liquid (γ)	Aliquot from blowdown/discharge	Daily for composite and immediately following detection of a high radiation level	
Nuclear Blowdown Waste Effluent	RM-L7 Liquid (γ)	Aliquot from Nuclear Blowdown Monitor Tank	Prior to batch release and immediately following detection of a high radiation level	
Turbine Room Sump Discharge	RM-L8 Liquid (γ)	Aliquot from sump	Daily for composite and immediately following detection of a high radiation level	
Condensate Polish Backwash Effluent	RM-L11 Liquid (γ)	Aliquot from Backwash tank	Prior to discharge and following detection of a high radiation level	

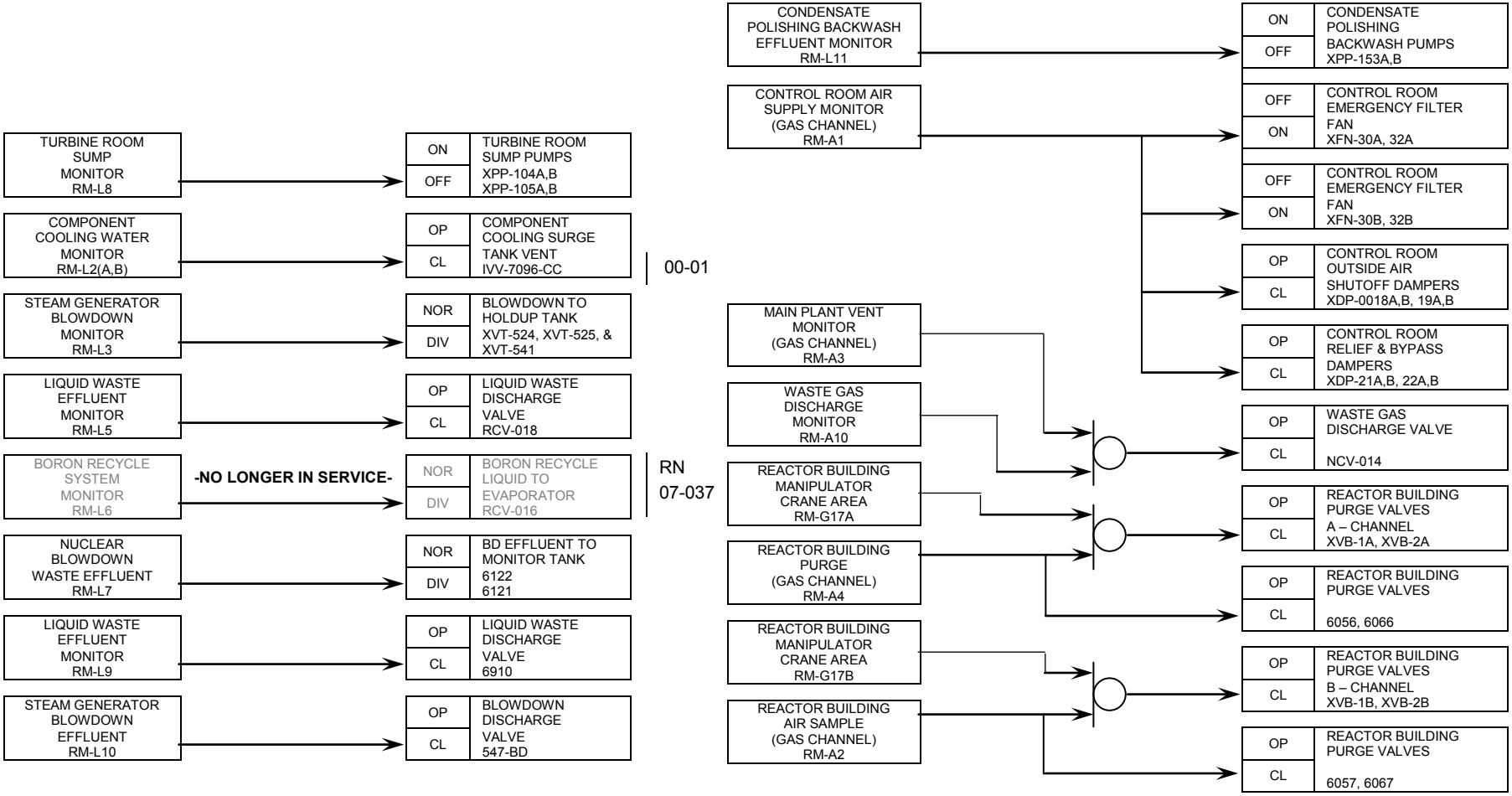

SOUTH CAROLINA ELECTRIC & GAS CO.
VIRGIL C. SUMMER NUCLEAR STATION

Radiation Monitoring System Interlocks

Figure 11.4-1 Rev. 2

RN 07-037
November 2011

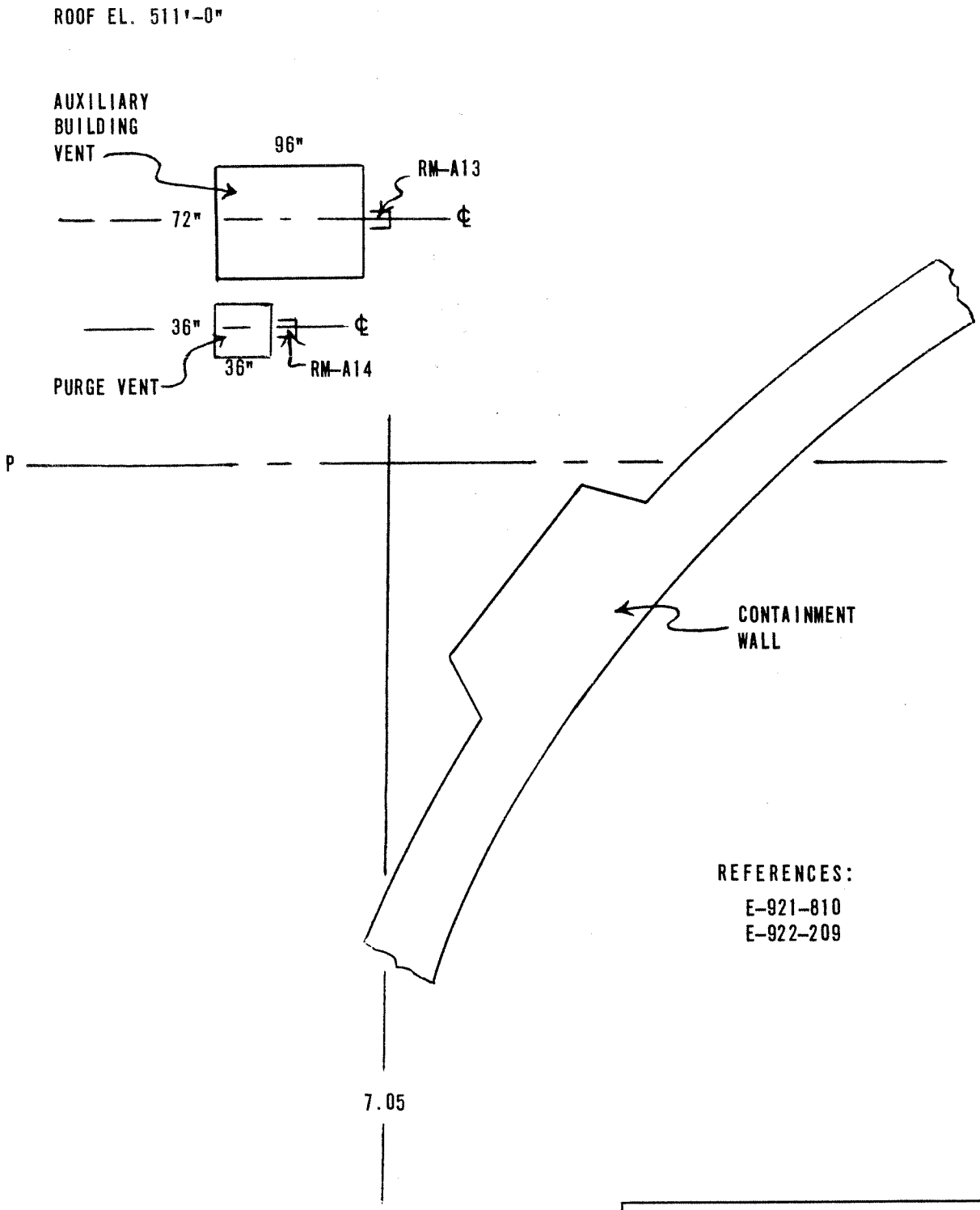

SOUTH CAROLINA ELECTRIC & GAS CO.
VIRGIL C. SUMMER NUCLEAR STATION

Location of High Range Effluent Monitors
RM - A13 and RM - A14

Figure 11.4-2

Amendment 0
August 1984

11.5 SOLID WASTE SYSTEM

11.5.1 DESIGN OBJECTIVES

The Solid Waste System is designed to package and/or solidify radioactive wastes for shipment to an approved offsite burial facility in accordance with applicable Department of Transportation (DOT), NRC, and State regulations. The system conforms to 10 CFR 20 and 10 CFR 50 requirements by providing shielding so that radiation exposure of operating personnel and the public is within acceptable limits. Solid waste packaging is accomplished in an area located on the ground floor (elevation 436') of the Auxiliary Building, a Seismic Category 1 structure.

Design, fabrication, and testing of Solid Waste System components and piping is in accordance with ANSI B31.1 and other accepted standards referenced by ANSI B31.1. Additional onsite system tests will be performed using nonradioactive materials prior to commercial operation. Packaging and shipping conform to 49 CFR 171 through 49 CFR 178.

Individual container shields and casks are used, when required, to maintain radiation levels within applicable radioactive materials regulations.

11.5.2 SYSTEM INPUTS

Radioactive waste packaged includes:

1. Spent resins.
2. Used filter cartridges.
3. Radioactive hardware.
4. Compacted waste such as rags, paper, clothing, etc.

RN 08-003

Secondary side condensate polisher resin may also be handled by the Solid Waste System (refer to 10.4.6).

Design quantities and activity levels of the various wastes are listed in Tables 11.5-1 through 11.5-4.

11.5.3 EQUIPMENT DESCRIPTION

11.5.3.1 Processing

The input to the Solid Waste System consists of the contents of several radioactive waste storage tanks containing primary spent resins, reactor grade demineralizer spent resins, non-reactor grade demineralizer spent resins, and nuclear blowdown spent resins and the associated valves, piping, and pumps. These components are located at elevation 412' and 447' in the Auxiliary Building. RN 08-003

Radwaste solidification when required is accomplished using approved equipment and process control program. Liquid waste contained in the reactor grade and non-reactor grade demineralizer is recirculated using their respective pumps and a sample is taken. This sample is used in the Process Control Program to determine pH adjustment, waste/binder ratio, and for the purpose of test solidification. Liquid waste is transferred to the fill head and into the liner located in the solidification area.

Primary and Secondary spent resins are transferred from their respective holdup tanks to either a disposable liner in the solidification area or a liner in the truck bay. A process shield or a DOT cask may be used when activity or exposure dictates. The resins may then be either solidified or dewatered for shipment. Dewater return is routed to the Excess Liquid Waste Hold up Tank, the Decon Pit Collection Tank, or the Floor Drain Tank. 02-01

Each waste transfer is immediately followed by a flush operation of the waste transfer piping and the internals of the fill head when used.

Labyrinth shield walls separate the drumming station control room, the piping process skid cubicle, and the container fill area from one another. Equipment is described in more detail in Section 11.5.3.2.

11.5.3.2 Equipment

The equipment comprising the Solid Waste System is described in Sections 11.5.3.2.1 through 11.5.3.2.6. Table 11.5-5 provides equipment design parameters. RN 08-003

Table 11.5-7 shows how the utility equipment, components, structures, and services that interface with the vendor-supplied solidification system comply with the applicable criteria of Regulatory Guide 1.143, Rev. 1, October 1979, "Design Guidance for Radioactive Waste Management Systems, Structures and Components Installed in Light-Water-Cooled Nuclear Power Plants" and Branch Technical Position ETSB 11-3, Rev. 2, July 1981, "Design Guidance for Solid Radioactive Waste Management Systems Installed in Light-Water-Cooled Nuclear Power Plants."

11.5.3.2.1 Waste Storage Tanks and Pumps

Tanks containing radioactive waste and wetted parts of pumps are fabricated from stainless steel, type 304, except as noted. The primary spent resin storage tank and pump are described in Section 11.2. Other radwaste tanks and pumps are the Nuclear Blowdown spent resin storage tank and Nuclear Blowdown spent resin storage tank pump.

The spent resin storage tank and the associated pump are located in the Auxiliary Building at floor elevation 412'. The waste hold-up tank and the associated pump are located at floor elevation 374'.

The resin transfer lines are sloped to avoid low points in the piping. Also, 5 diameter pipe bends are used from the resin tanks to the solidification area. These long sweeping bends are necessary to avoid plugging that could occur in the inner wall of a bend. Instrument lines are kept to a minimum to avoid dead legs. All lines will be flushed with makeup water prior to any maintenance activities. The reactor grade and non-reactor grade demineralizers located on elevation 447' are flushed directly to liners in the truck bay at elevation 436'. RN 08-003

The resin and waste transfer lines are 2" nominal diameter. This size is sufficient for the desired flow rates without causing excessively large pressure drops that could result in line plugging.

11.5.3.2.2 Instrumentation and Controls

The system uses temperature, flow, pressure, and level instruments to monitor and/or control the process located throughout the system. RN 08-003

1. Inplant Control Panel

   The inplant control panel is a standard enclosure of NEMA 12 construction. The inplant control panel provides full operational control for resin and liquid waste transfer operations to the waste processing equipment. It is also used to interface with equipment for dewater return and for flushing operations. This panel contains switches and lights for valves and pumps which facilitate these operations. RN 08-003

2. Power Panel

The power panel provides power for the operation of the various pump motors and valve motors in the system.

3. Radiation Monitoring RN 08-003

Radiation monitoring is provided by portable instrumentation and/or semi-permanent radiation monitoring equipment.

11.5.3.2.3 Waste Containers and Shielding

All wastes are packaged in containers which meet DOT/NRC requirements. The containers used for solidification and resin dewatering provide appropriate connections for processing.

RN 08-003

Higher activity wastes will be processed with the liner already in a cask located in the truck bay access. A double lid cask top will be used to limit exposure in this area. The main part of the lid shields the entire top of the cask except the immediate area required for the fill head. After the process is complete, the fill head is removed and the secondary cask lid is installed. 02-01

Final closure of all radwaste liners may be accomplished by remote handling equipment, if required. High integrity containers are remotely sealed by a hand manipulated device which screws the closure cap into the liner.

11.5.3.2.4 Contamination Control Facilities

An adjacent decontamination area is provided for cleanup of contaminated containers. Exposed surfaces of filled containers or casks are surveyed by the Health Physics Group to identify the presence of removable radioactive contamination prior to transfer to storage or shipment. Containers are decontaminated in the adjacent decontamination area, if required.

11.5.3.2.5 Handling Equipment

Equipment used for handling waste containers and equipment within the radwaste area and for truck loading includes the following:

1. One ton jib crane.

2. Three ton jib crane.

3. Twenty ton hoist and monorail.

4. Three ton bridge crane. RN 08-003

5. Ten ton bridge crane.

The one ton jib crane is located on a wall above the truck access floor at elevation 455'. It is used for hoisting chemicals and equipment from the truck access area to the mezzanine floor. It has a lift of 23 feet at a speed of 22 ft/min.

The three ton jib crane is located on a wall above the solidification area. It is used to handle the vendor's fill head and other equipment. It has a 23 foot lift at a speed of 11 ft/min.

The twenty ton hoist and monorail is used to load the containers on a truck for transport to a burial site. It has a lift of 27 feet at a speed of 10 ft/min. RN 08-003 02-01

The three ton bridge crane is located over the radioactive filter area at floor elevation 463'. It is used in conjunction with a 3-1/2 inch thick lead filter transfer cask to remove spent radioactive filter cartridges from the filter housings located in concrete cubicles on the floor below at elevation 452'-6". The trolley has a transfer mechanism which permits the hoist and the cask to engage a monorail which extends over the radwaste fill area. A hatch at floor elevation 463' is removed and the hoist lowers the cask to the radwaste area at floor elevation 436'. It has a lift of 52 feet at a speed of 22 ft/min and a trolley speed of 65 ft/min. 02-01

The ten ton bridge crane is located in the hot machine shop. It is chiefly used to service the machine shop. However, a portion of the floor area in the machine shop is partitioned from the rest of the shop for storage of unused containers, 55 gallon drums, pallets, etc. The storage area is also serviced by this crane. The hoist has a lift of 24 feet at either 7 or 20 ft/min. The trolley has a speed of either 32-1/2 or 65 ft/min.

11.5.3.2.6 Waste Compactors

One waste compactors is available for use and is capable of handling 90 cubic feet of waste in one compaction. RN 08-003

11.5.3.2.6.1 Normal Use Compactor

An electromechanical compactor with a compressive force capacity of 100,500 lbs. is used to compact dry wastes into a 90 cubic foot container. During compaction the container is completely enclosed. A self-contained HEPA filter and blower system filters the air released in the compaction process before any air is discharged to the Fuel Handling Building Charcoal Exhaust System. An electrical interlock prevents the operation of the compactor if the door which encloses the container is not completely closed. This prevents injury to the operator and unfiltered air from escaping to the Hot Machine Shop atmosphere. 02-01 02-01

11.5.3.2.6.2 Standby Compactor **-No Longer In Service-** RN 08-003

11.5.3.2.7 Truck Loading Features

A wall penetration is provided between the fill and truck access area to fill directly to containers on a truck. This penetration is located in the shielded cubicle of the solidification area such that exposure in the truck access is limited.

11.5.4 EXPECTED VOLUMES

The expected annual volume of solid radioactive wastes together with the associated Curie content of principal nuclides to be processed are described in Sections 11.5.4.1 through 11.5.4.4.

11.5.4.1 Activity Levels

The activity level of the wastes generated directly from operation of the Nuclear Steam Supply System is based upon reactor plant operation at a base load factor of 80 percent power with reactor coolant activity levels determined on the basis of fission product diffusion through cladding defects in 0.12 percent of the fuel rods. The system is conservatively designed to accommodate solid wastes generated by plant operations with up to 1 percent fuel defects. Source term data used for system design are presented in Section 11.1.

Table 11.5-1 lists the demineralizer resin volumes and expected volumes replaced on an average yearly basis. Table 11.5-2 presents a summary of the anticipated total solid radioactive waste generated per year. The expected activity of the solid waste at time of shipment is dependent upon the decay storage time. An isotopic breakdown of spent resin activities is presented in Table 11.5-3. The maximum activity of expended filter cartridges is given in Table 11.5-4. The associated Curie content and volume of waste shipped from a number of Westinghouse designed operating reactors is given in Table 11.5-6 for each year from 1971 through 1974. RN 08-003

11.5.4.2 Processed Wastes

In the case of primary spent resins, the Curie content totals approximately 1390 Ci/yr. Nuclear Blowdown System spent resins are estimated, for design purposes, to account for approximately 4.0 Curies per year. RN 08-003

11.5.4.3 Filter Cartridges

The volume of expended filter cartridges processed for disposal by the Solid Waste System is based upon the expected filter cartridge change frequency for potentially radioactive filters. The assumption is made that filters processing reactor coolant will require cartridge renewal due to excessive radiation levels or high ΔP.

The maximum expected activity of expended filter cartridges shipped from the site is conservatively based upon a shielding criteria of a maximum contact dose rate.

11.5.4.4 Miscellaneous Solid Wastes

The annual volume of miscellaneous solid wastes processed by the solid waste compactor is assumed to amount to 85 containers of 90 cubic feet of compacted refuse. The wastes consist of rags, coveralls, ventilation filter cartridges, and various other potentially contaminated refuse. This refuse is normally classified as low specific activity.

11.5.5 PACKAGING

11.5.5.1 Evaporator Bottoms and Chemical Samples **-No Longer In Service-** RN 08-003

11.5.5.2 Spent Resin

Resin in a demineralizer is considered spent when its decontamination factor falls below a permissible level. The spent resin, from demineralizers in the primary system is stored in a 350 ft^3 storage tank. The spent resin from nuclear blowdown demineralizers in the secondary system is stored in a 600 ft^3 Nuclear Blowdown System storage tank. The resin stored in the primary system is normally allowed to decay for a period of up to several months.

The reactor grade water demineralizers normally contain 28 ft^3 of resin per demineralizer in each of the three demineralizers. The non-reactor grade water demineralizers contain 28 ft^3 of resin per demineralizer in each of the seven demineralizers. These ten demineralizers are located on elevation 447' of the auxiliary building and are sluceable directly to an available liner in the truck bay. These demineralizers are flushed when the decontamination factor falls below a permissible level. RN 08-003

When a sufficient quantity of resin has accumulated and decayed, the resin is sampled, analyzed for isotopic constituents and activities, and packaged. Prior to packaging, nitrogen is sparged into the tank to form a slurry which is transferred to the liner by nitrogen cover gas pressure. Dewatering of the resin is accomplished using dewatering equipment with the water being returned either to the Excess Liquid Waste Holdup Tank, the Decon Pit Collection Tank, or the Floor Drain Tank. Spent resin may also be solidified.

The radiation level of the primary resin is expected to require use of a 4 inch lead shield on some occasions. The radiation level of the Nuclear Blowdown System resin is expected to require not more than 1-1/2 inch lead shield.

The primary spent resin storage tank has a two inch discharge line located along the tank center line, protruding from its top and extending to within 3 inches above the dished bottom. In preparation for packaging, the discharge valve is opened and the center discharge tube cleared by backflush with a burst of flush water from the Reactor Makeup Water System. Pressure to 100 psig is available, if required. Flush water may continue to be added if needed to obtain a reasonable slurry. The discharge valve is then closed. Loosening of the resin is achieved by introducing nitrogen through seven spargers at the tank bottom. Resin sluice water can be recirculated through the spargers to loosen the resin if desired. When the nitrogen pressure increases to that required for resin transfer, the resin discharge valve is opened. Nitrogen continues to bubble through the resin bed to maintain a gas pressure for transfer of the resin until the liner reaches the full level. The liner vent during this operation is directed to the plant vent or to a portable ventilation unit. Similarly, the reactor grade and non-reactor grade demineralizers are flushed directly to a truck bay liner. RN 08-003

The Nuclear Blowdown System spent resin storage tank is discharged by use of a procedure similar to that used for the primary spent resin storage tank. The resin slurry is discharged through a 2 inch nozzle located at the tank bottom. Nitrogen gas is bubbled into the tank bottom connection to loosen and mix the resin and pressurize the tank. When the tank gas pressure increases to that required for resin transfer, the resin slurry discharge valve is opened. Operation of both tanks from this point is similar. RN 08-003

When the transfer is complete, the resin discharge and nitrogen supply valves are closed and a tank vent valve is opened to discharge the nitrogen cover gas from the storage tank. In addition, the flush water supply valve is opened to backflush and forward flush and decontaminate the resin transfer line. A flow diagram of the primary resin system is provided by Figure 11.2-2, Sheet 3. Figure 10.4-15 describes the nuclear blowdown resin storage. RN 08-003

A flow of approximately 40 gpm is required to transfer the resin slurry to the liner in the radwaste area. It is anticipated that approximately 1300 std ft^3 and 2200 std ft^3 of nitrogen gas will be the maximum required for each resin transfer operation from the 350 ft^3 primary resin storage tank and 600 ft^3 nuclear blowdown resin storage tank, respectively.

The Nitrogen System is set to supply nitrogen to the resin storage tanks at a pressure of 100 psig, if needed. The resin storage tanks are designed for 150 psig. Relief valves on the primary and nuclear blowdown resin storage tanks are set to relieve at 100 psig and 150 psig, respectively. The primary resin storage tank relieves to the waste holdup tank. The Nuclear Blowdown resin storage tank relieves to the Nuclear Blowdown System reservoir by way of an open drain. 02-01

11.5.5.3 Filter Disposal

Filters are of the disposable cartridge type contained in housings having hinged tops. They are replaced when surface dose rate or pressure drop exceeds established levels. Filters which are potentially radioactive are located in individual cubicles in an area close to the drumming station area. If the radiation level of the cartridge requires shielding during removal, a concrete plug in the floor above the housing is removed and another plug with a hole in it is placed in the stepped opening. A filter cask with 3 1/2" lead encased in stainless steel is placed over the hole. The filter housing is opened and the cartridge is drawn into the cask by the use of special tools having extension rods. Once the filter is in place, the cask bottom is closed and the tops installed. The cask is then transported by an overhead crane to a hatch at floor elevation 463' of the Auxiliary Building. This hatch is located above the drumming station area on the floor below. The cask is lowered into the drumming station area. Storage and disposal of all filters is within either high integrity containers or DOT approved containers depending on the specific activity of the filters. For filters requiring shielding, the container is stored in a shielded cask. The filter transfer cask is positioned over a small opening in the shield cask, the bottom slide is pulled open, and the filter is lowered into the shielded container. In this manner, the handling of highly contaminated filters is kept to a minimum.

11.5.5.4 Radioactive Hardware

Radioactive hardware can consist of damaged or used equipment or instruments, which due to geometry or materials of fabrication, cannot be readily decontaminated. Such material is disposed of in much the same way as are filter cartridges or as compacted waste, depending upon radiation levels.

11.5.5.5 Compacted Wastes

An electromechanical compactor provides 100,500 lbs. of compressive force for the compaction of compressible waste into 90 cubic foot containers. During compaction the container and compacting mechanism are enclosed and the enclosure is vented to the Fuel Handling Building Charcoal Exhaust System through a HEPA filter by a blower. The blower and filter are contained within the compactor. The blower is automatically operated when the door is closed; however, a manual switch is provided so the blower may be operated without compactor operation. The compactor will not operate unless the door is closed, protecting the operator from injury and preventing escape of unfiltered air to the atmosphere. RN 08-003

11.5.6 STORAGE

Compactable waste, filled containers of compacted waste, and spent filter cartridges are stored in the shielded areas of the radwaste area or in a location determined by the Manager, Health Physics and Safety Services. Contaminated hardware and tools may also be stored in these rooms. Solidified waste, after solidification is complete, and dewatered resins, once dewatering is complete, may be shipped off-site for immediate burial at a licensed facility. Primary spent resins will normally have at least a one month decay period while being held in the spent resin storage tank. Secondary blowdown resins do not normally require a decay period. RN 10-022 02-01 RN 08-003

If solidified waste and/or dewatered resins require storage for any reason, they will be stored in the radiation control area outside the truck access on the concrete pavement or in a location determined by the Manager, Health Physics and Safety Services. Waste stored in the storage area will be shielded as required by portable shields and/or casks used for shipment. 02-01 RN 10-022

Storage areas for solidified waste, dewatered resins, and compacted waste are sufficient, based on the estimates presented in Section 11.5.4, to accommodate greater than 30 days waste generation.

11.5.7 SHIPMENT

Shipment, in accordance with applicable regulations, is made as necessary--dependent upon operational considerations and storage area availability.

The primary activity determination method will be to sample the waste stream (resins and liquid waste) during transfer to a process container and analyze the sample using the appropriate counting instrumentation. An isotopic determination is made of the radionuclides present and the activity of each. Summation of the individual activities is used to calculate the Curie content of the processed container.

For cases where the primary method cannot be used, an alternate technique will be implemented. The alternate method entails using the dose rate of the packaged waste in order to calculate the Curie content. The calculation considers the waste characteristics, geometry of the waste package, characteristics of the container and solidification media (if applicable), and the average gamma energy. For spent cartridge filters, this alternate method will be used to determine the Curie content. The appropriate counting instrumentation is used to analyze samples taken from the process stream to identify radionuclides present and the average gamma energy.

11.5.8 POTENTIAL FOR RELEASES

11.5.8.1 Potential for Release during Container Filling

The filling operation may be terminated via visual inspection using a remote monitor/television camera. Termination is accomplished by closing valves MOV-2 and MOV-5.

There is no airborne release to the atmosphere in the fill areas. Air in the container and gas, if any, from the waste entering the container are vented to the building exhaust, through a local filter, or through a portable ventilation unit. Only one line feeds waste to the container. This is flushed with water as the final phase of the fill cycle.

If leaks of any kind or spills are observed, the operation in progress can be immediately terminated. Any spill which may occur will be contained by permanent curbing in the solidification area.

Except for the curb in the solidification area, there are no physical barriers in the immediate fill areas to contain spills. Spills from the shipping container would need to be drained to a specific location or container as determined by the type of material spilled.

The floor surfaces have a special nonporous finish to permit decontamination of the surface, if required.

11.5.8.2 Potential for Release from Storage Tanks

11.5.8.2.1 Waste Evaporator Concentrates Tank **-No Longer In Service-** RN 08-003

11.5.8.2.2 Chemical Drain Tank **-No Longer In Service-**

11.5.8.2.3 Primary Spent Resin Storage Tank

This tank contains only a negligible quantity of radioactive gases in the gas space. The gas is normally contained in the tank by a closed vent valve. This vent is ducted to the Auxiliary Building Exhaust System and is open only during transfer of resin from the demineralizers or at the conclusion of transferring resin from this tank to the radwaste packaging area.

Overflow is not anticipated since primary spent resin storage tank capacity is sufficient to accommodate at least 60 days waste generation under normal plant operating conditions. Overflow protection is provided by a high level alarm at the Solid Waste System control panel. Excess water can either be pumped or drained to the waste holdup tank. Overflow, if it occurs, is to the waste holdup tank through a relief valve.

The tank is enclosed within a concrete cubicle with entrance from an overhead shield slab. Any leakage is directed to the floor drain tank through a floor drain.

11.5.8.2.4 Nuclear Blowdown Spent Resin Storage Tank

This tank contains only trace amounts of radioactive gas. The gas is normally contained in the tank by a closed vent valve. The tank is vented to the cubicle, which is serviced by the building exhaust system, only during transfer of resin from the demineralizers or at the conclusion of resin transfer from this tank to the radwaste packaging area.

Overflow is not anticipated since the nuclear blowdown spent resin storage tank capacity is sufficient to accommodate at least 30 days waste generation under normal plant operating conditions.

Overflow protection is provided by a high level alarm at the Solid Waste System control panel. Excess water can either be pumped or drained to the Nuclear Blowdown System reservoir. Overflow, if it occurs, is to the Nuclear Blowdown System reservoir through a relief valve.

The tank is enclosed within a concrete cubicle with entrance from an overhead shield slab. Any leakage is directed to the Nuclear Blowdown System reservoir through a floor drain.

TABLE 11.5-1

SPENT RESIN VOLUMES

Demineralizer	Number	Resin Volume per Bed (ft^3)	Expected Average Resin Volume Replaced/year (ft^3)	
CVCS Mixed Bed	2	30	60 (minimum)	
CVCS Cation Bed	1	20	20 (minimum)	
Recycle Evaporator Feed	2	30	30 (minimum)	
Boron Thermal Regeneration	4	70	70	RN 08-003
Waste Monitor Tank	1	30	540	
Nuclear Blowdown				
Primary	2	150	450	
Polishing	2	90	270	
Spent Fuel Pool	1	54	54	
Excess Liquid Waste	2	30	540	
Reactor Grade Process Water	3	28	28	RN 08-003
Non-Reactor Grade Process Water	7	28	56	

02-01

TABLE 11.5-2

ANTICIPATED TOTAL SOLID WASTE GENERATED PER YEAR

	VOLUME (FT^3) (1)	
Primary Spent Resins	1340	
Reactor Grade Demineralizer Spent Resins	28	RN 08-003
Non-Reactor Grade Demineralizer Spent Resins	56	
Dry Waste (Compacted)	5000	
Nuclear Blowdown Spent Resins	500	
Spent Filters		
Primary	320	
Nuclear Blowdown	160	
Totals	7404	RN 08-003

(1) Before solidification.

TABLE 11.5-3

MAXIMUM EXPECTED CONCENTRATIONS OF WASTE TO BE PACKAGED [1]

Isotope	Spent Resin Activity (μ/cc)
Cr-51	1.9×10^{1}
Mn-54	1.9×10^{1}
Fe-55	1.3×10^{2}
Fe-59	1.6×10^{1}
Co-58	3.9×10^{2}
Co-60	1.7×10^{2}
Rb-86	3.2×10^{-1}
Sr-89	6.2
Sr-90	8.7×10^{-1}
I-131	7.9×10^{2}
Cs-134	1.1×10^{3}
Cs-136	3.5×10^{1}
Cs-137	9.0×10^{2}
Ba-140	1.0
TOTAL	3.6×10^{3}

RN 08-003

(1) This table is based on N237 Standard.

TABLE 11.5-4

MAXIMUM EXPECTED ACTIVITIES OF EXPENDED FILTER CARTRIDGE

Filter	Number of Filters	Activity Per Cartridge (Ci)					Contact Dose Rate (R/Hr) (1)	
		Co-58	Co-60	Cs-134	Cs-137	Others		
Reactor Coolant	1	4.0	2.8	2.9	2.0	-	500.0	02-01
Seal Water Injection	2	5.4×10^{-1}	3.9×10^{-1}	3.8×10^{-1}	2.7×10^{-1}	-	100.0	02-01
Seal Water Return	1	8.2×10^{-1}	4.7×10^{-1}	5.7×10^{-1}	4.1×10^{-1}	-	100.0	
Recycle Evaporator Feed	1	8.2×10^{-1}	4.7×10^{-1}	5.7×10^{-1}	4.1×10^{-1}	-	100.0	
Waste Monitor Tank	1	8.1×10^{-1}	4.6×10^{-1}	5.8×10^{-1}	4.2×10^{-1}	-	100.0	RN 08-003
Spent Fuel Pool	2	8.2×10^{-1}	4.7×10^{-1}	5.7×10^{-1}	4.1×10^{-1}	-	100.0	
Spent Fuel Pool Skimmer	1	8.2×10^{-1}	4.7×10^{-1}	5.7×10^{-1}	4.1×10^{-1}	-	100.0	
Spent Resin Sluice	1	8.1×10^{-1}	4.6×10^{-1}	5.8×10^{-1}	4.2×10^{-1}	-	100.0	
Floor Drain Tank	1	8.1×10^{-1}	4.6×10^{-1}	5.8×10^{-1}	4.2×10^{-1}	-	100.0	
Nuclear Blowdown								
a. Demineralizer Inlet	1	8.8×10^{-3}	8.8×10^{-3}	7.3×10^{-3}	2.1×10^{-2}		1.111	02-01
b. Demineralizer Outlet	1	1.1×10^{-2}	2.6×10^{-3}	4.8×10^{-2}	1.3×10^{-1}		3.1	
c. Spent Resin Sluice	1	4.4×10^{-3}	4.0×10^{-3}	3.4×10^{-3}	1.0×10^{-2}		0.5	

(1) Unshielded surface dose rate.

TABLE 11.5-5

SOLID WASTE SYSTEM EQUIPMENT DESIGN PARAMETERS

Waste Evaporator Concentrates Tank **- No Longer In Service -**		RN 08-003
Waste Evaporator Concentrates Pump (XPP0052) **- No Longer In Service -**		
Nuclear Blowdown Spent Resin Storage Tank		
Quantity	1	
Volume, ft^3	600	
Type	Vertical	
Design Pressure, psig	150	
Nuclear Blowdown Spent Resin Storage Tank Sluice Pump (XPP0110)		
Quantity	1	
Type	Canned Centrifugal	
Design Capacity, gpm	150	02-01
Shutoff Head, ft	249	
Design Pressure, psig	150	
Design Operating Temperature, °F	100 - 135	
Design Temperature, °F	140	

TABLE 11.5-6

SOLID RADIOACTIVE WASTE PROCESSED
FROM WESTINGHOUSE DESIGNED OPERATING REACTORS

Ci (Ft^3)

Plant	1971	1972	1973	1974
Connecticut Yankee	$2.7x10^2$ ($2.2x10^3$)	$4.0x10^3$ ($3.9x10^3$)	$5.7x10^2$ ($5.6x10^3$)	$9.4x10^2$ ($7.1x10^3$)
Yankee Rowe	2.9 ($1.1x10^3$)	2.3 ($7.8x10^3$)	2.9 ($4.2x10^2$)	$1.3x10^2$ ($7.8x10^3$)
San Onofre	1.2 ($7.8x10^2$)	$8.0x10^1$ ($3.9x10^3$)	$3.8x10^2$ ($3.9x10^3$)	$2.3x10^2$ ($2.4x10^3$)
Robert E. Ginna	$4.7x10^1$ (2.5x104)	$1.4x10^3$ ($1.3x10^3$)	$6.0x10^2$ ($7.1x10^3$)	$6.1x10^2$ ($9.9x10^3$)

02-01

Note:

Annual Average Per Plant, Ci(ft^3) = 5.8×10^2 (5.6×10^3)

TABLE 11.5-7

VALVES (GAI); VALVES (WESTINGHOUSE);
EQUIPMENT; PIPING (GAI); PIPING (WESTINGHOUSE)

TYPE	DESIGN AND FABRICATION	INSPECTION AND TESTING	MATERIALS *	
		VALVES (GAI)		
Diaphragm (Dia.)	ANSI B16.5 (1968)	ANSI B16.5 (1968)	ASTM (6/74)	
Check (H_20)	ANSI B16.5 (1968)	ANSI B16.5 (1968)	ASTM (6/74)	
Dia. (auto.)	ANSI B16.5 (1968)	ANSI B16.5 (1968)	ASTM (6/74)	
Plug (auto.)	ANSI B16.5 (1968)	ANSI B16.5 (1968)	ASTM (3/73)	
Check	ANSI B16.5 (1968)	ANSI B16.5 (1968)	ASTM (2/74)	
Check (N_2)	ANSI B16.5 (1968)	ANSI B16.5 (1968)	ASTM (6/74)	
Dia. (N_2)	ANSI B16.5 (1968)	ANSI B16.5 (1968)	ASTM (6/74)	
Dia. (Control N_2)	ANSI B16.5 (1968)	ANSI B16.5 (1968)	ASTM (6/75)	
		VALVES (WESTINGHOUSE)		
Dia.	ANSI B16.5 (1968) ASME B&PV Sec. III	ANSI B16.5 (1968)	ASTM (1/73)	02-01
Dia. (auto)	ANSI B16.5 (1968) ASME B&PV Sec. III	ANSI B16.5 (1968)	ASTM (1/73)	
Check	ANSI B16.5 (1968)	ANSI B16.5 (1968)	ASTM (11/71)	
Globe	ANSI B16.5 (1968)	ANSI B16.5 (1968)	ASTM (11/71)	

* Dates listed under Materials refer to specification issue dates.
The ASTM Standard applicable to these dates apply.

EQUIPMENT

EQUIPMENT	SPEC. ISSUE DATE *	DESIGN AND FABRICATION	INSPECTION AND TESTING	MATERIALS	
Tank (PSRS)	6/72	ASME B&PV Sec. III	ASME B&PV Sec. III	ASME B&PV Sec. III	RN 08-003
Tank (NBSRS)	6/75	ASME Sec. VIII	ASME Sec. VIII	ASTM	
Tank (PSR)	11/71	ASME Sec. III, Hydraulic Inst. Standard (HIS)	ASME Sec. III, HIS	ASME Sec. III	02-01
PUMP (NBSR)	1/74	HIS	HIS	ASTM	RN 08-003
Filters	7/72	ASME Sec. VIII	ASME Sec. VIII	ASTM	

TABLE 11.5-7 (continued)

VALVES (GAI); VALVES (WESTINGHOUSE);
EQUIPMENT; PIPING (GAI); PIPING (WESTINGHOUSE)

EQUIPMENT	SPEC. ISSUE DATE*	DESIGN AND FABRICATION	INSPECTION AND TESTING	MATERIALS	02-01
		PIPING (GAI)			
Waste, H_20	10/73	ANSI B31.10	ANSI B31.10	ASTM	02-01
N_2, Air	10/73	ANSI B31.10	ANSI B31.10	ASTM	
		PIPING (WESTINGHOUSE)			
Waste, N_2, H_20	8/71	ANSI B31.10	ANSI B31.10	ASTM	02-01

NOTES:

CD = Chemical Drain **- No Longer In Service -**
PSRS = Primary Spent Resin Storage
NBSRS = Nuclear Blowdown Spent Resin Storage
WEC = Waste Evaporator Concentrates **- No Longer In Service -**
B&PV = Boiler and Pressure Vessel Code

RN 08-003

Figure 11.5-1 Rev. 18 - Deleted by RN08-003, January, 2011

11.6 OFFSITE RADIOLOGICAL MONITORING PROGRAM

The offsite Radiological Environmental Monitoring Program is described in The Offsite Dose Calculation Manual.