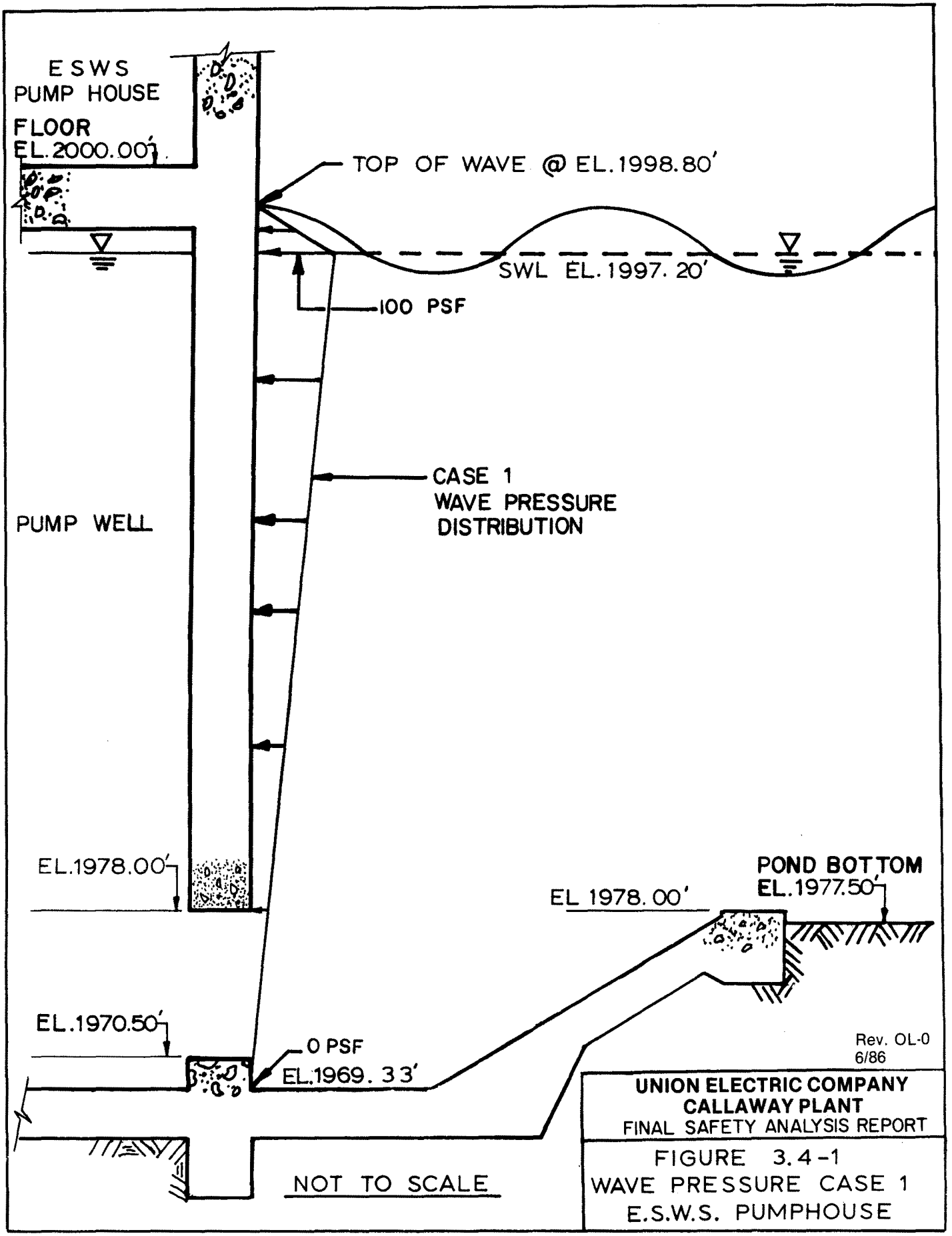
ESWS
PUMP HOUSE
FLOOR
EL.2000.00'
TOP OF WAVE @ EL.1998.80'
SWL EL.1997.20'
100 PSF
CASE 1
WAVE PRESSURE
DISTRIBUTION
PUMP WELL
EL.1978.00'
POND BOTTOM
EL.1977.50'
EL 1978.00'
EL.1970.50'
0 PSF
EL.1969.33'
NOT TO SCALE
Rev. OL-0
6/86
UNION ELECTRIC COMPANY
CALLAWAY PLANT
FINAL SAFETY ANALYSIS REPORT
FIGURE 3.4-1
WAVE PRESSURE CASE 1
E.S.W.S. PUMPHOUSE

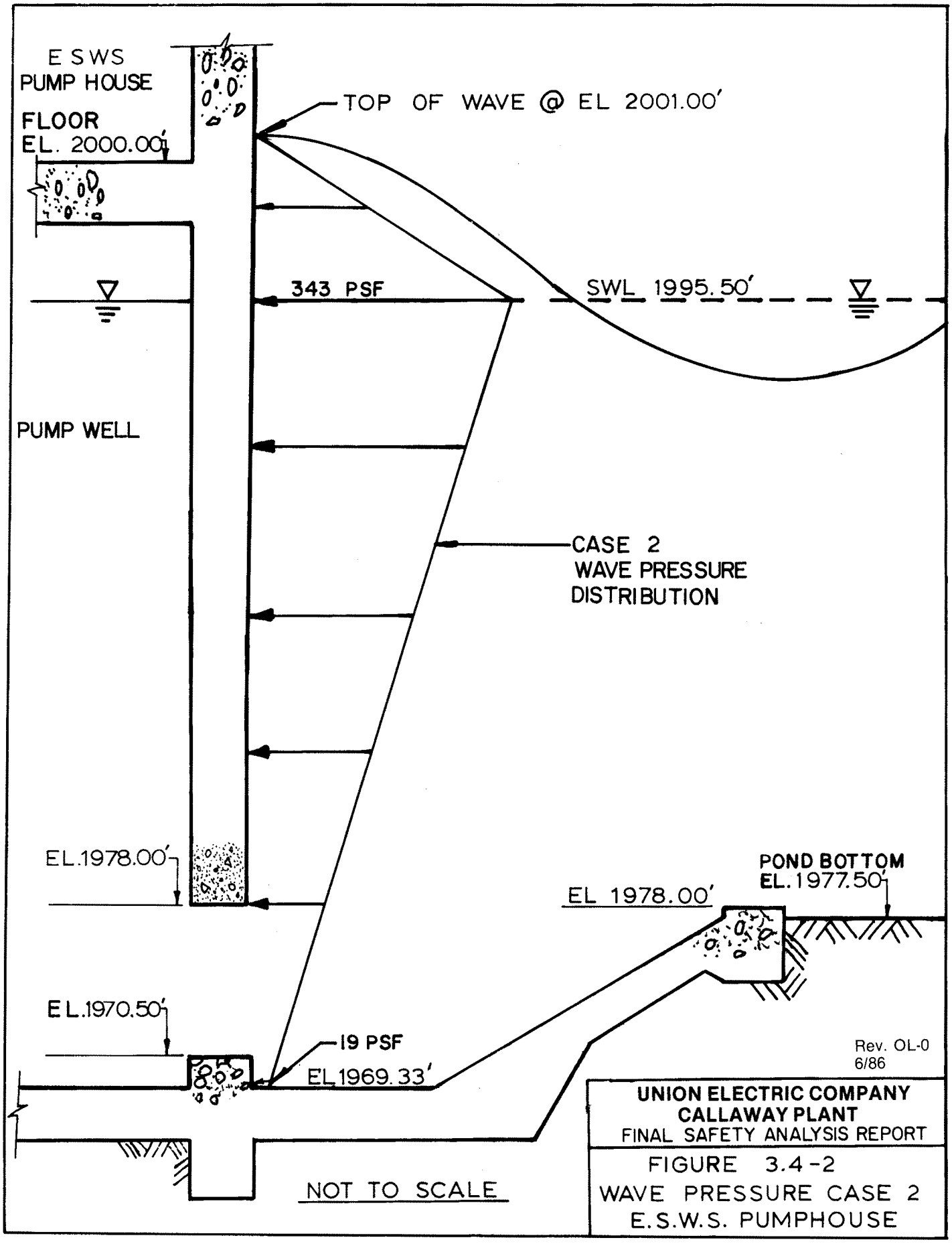

Rev. OL-0
6/86

UNION ELECTRIC COMPANY
CALLAWAY PLANT
FINAL SAFETY ANALYSIS REPORT

FIGURE 3.4-2
WAVE PRESSURE CASE 2
E.S.W.S. PUMPHOUSE

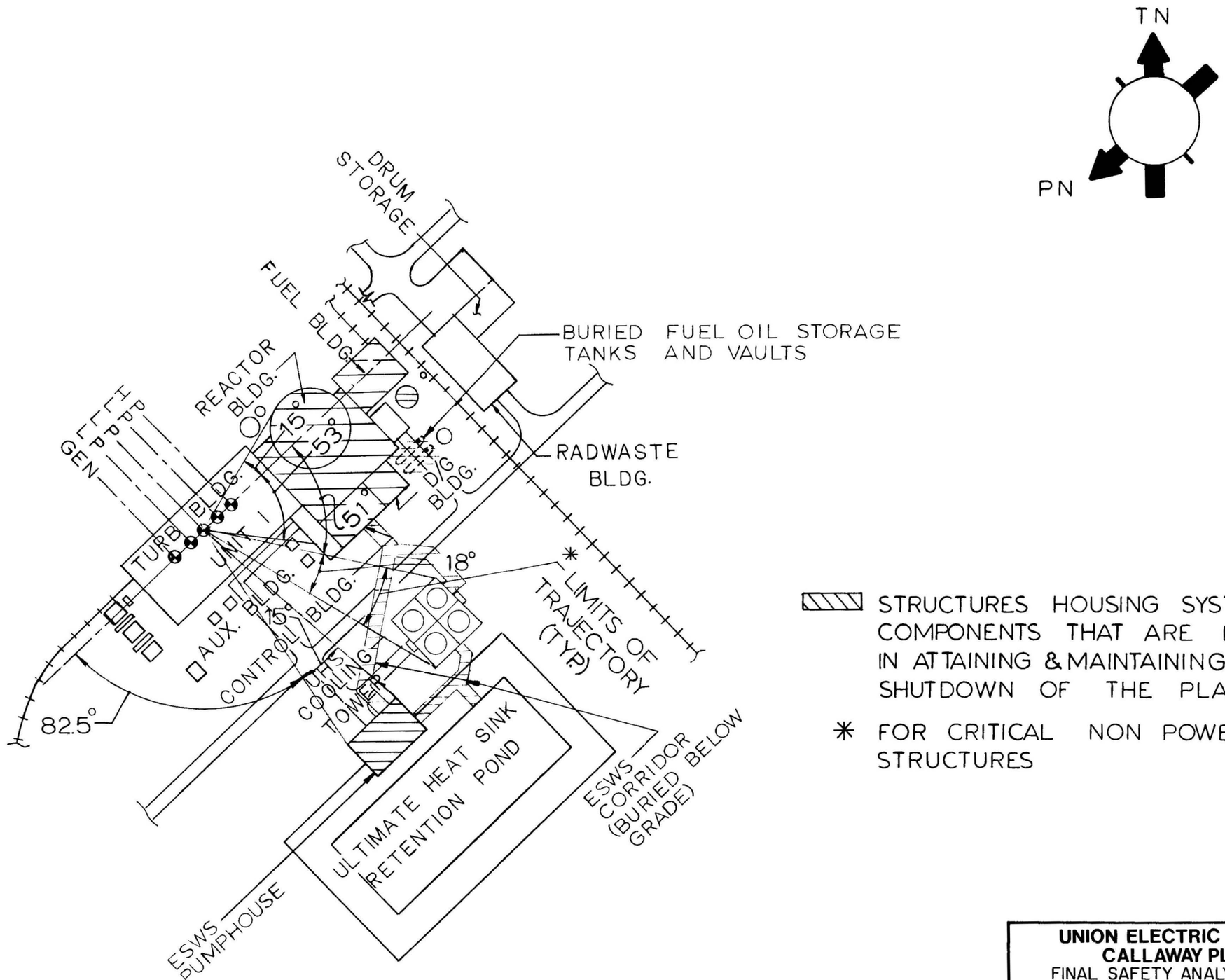

Rev. OL-0
6/86

UNION ELECTRIC COMPANY
CALLAWAY PLANT
FINAL SAFETY ANALYSIS REPORT

FIGURE 3.5-1

TURBINE MISSILE TRAJECTORY

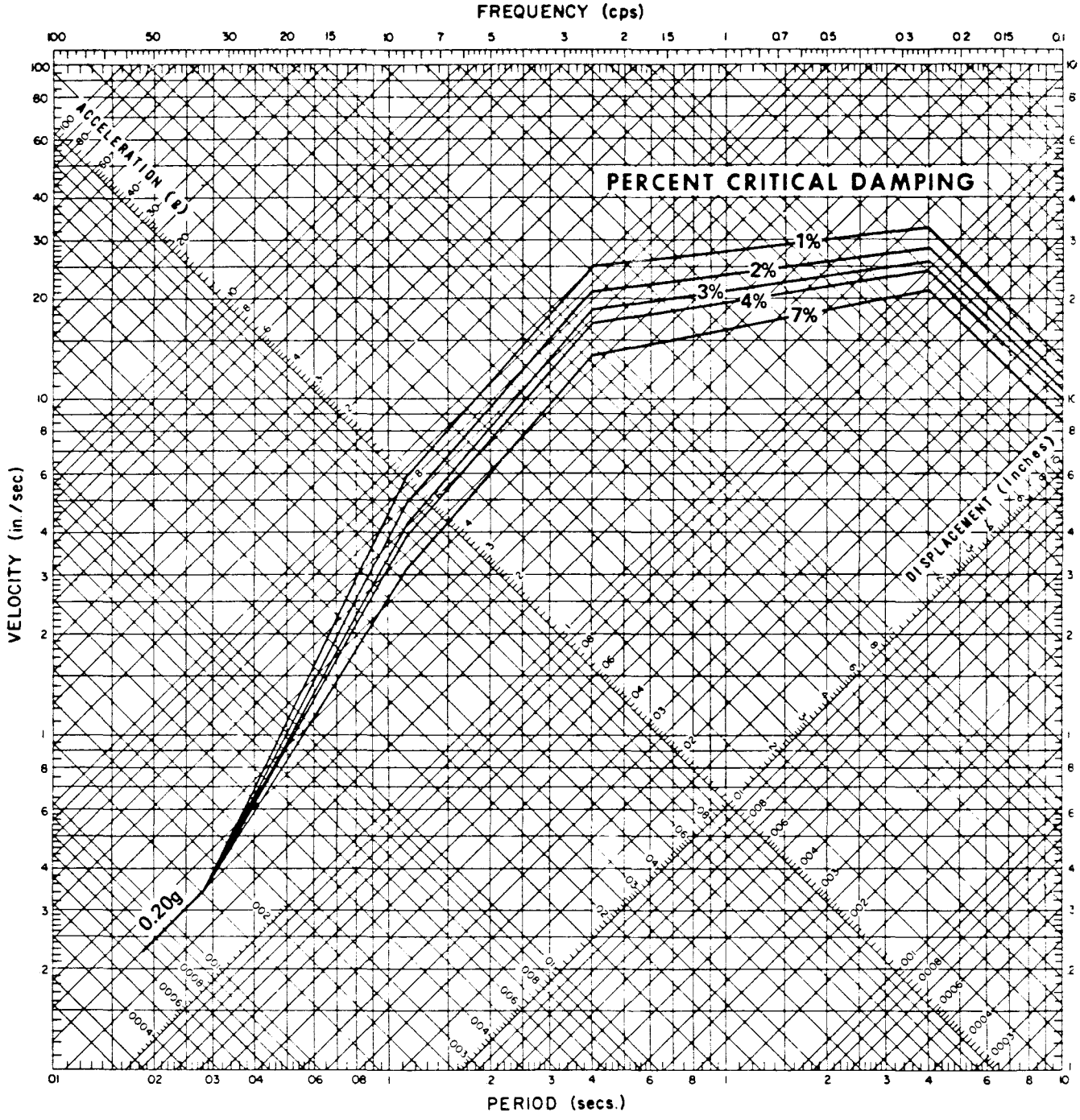

Rev. OL-0
6/86

UNION ELECTRIC COMPANY
CALLAWAY PLANT
FINAL SAFETY ANALYSIS REPORT

FIGURE 3.7-1
SSE HORIZONTAL GROUND SPECTRA
0.20 G

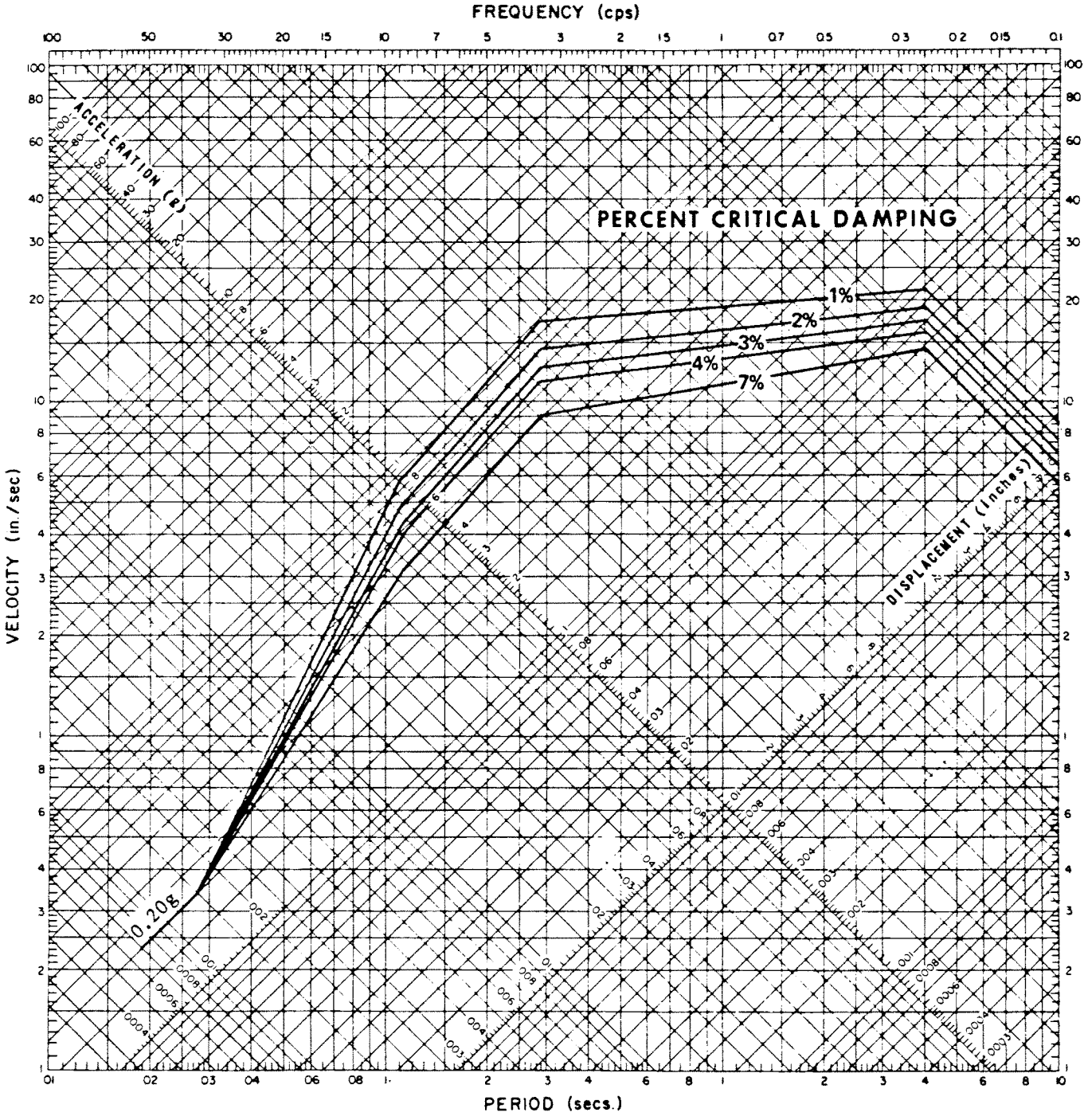

Rev. OL-0
6/86

UNION ELECTRIC COMPANY
CALLAWAY PLANT
FINAL SAFETY ANALYSIS REPORT

FIGURE 3.7-2
SSE VERTICAL GROUND SPECTRA
0.20 G

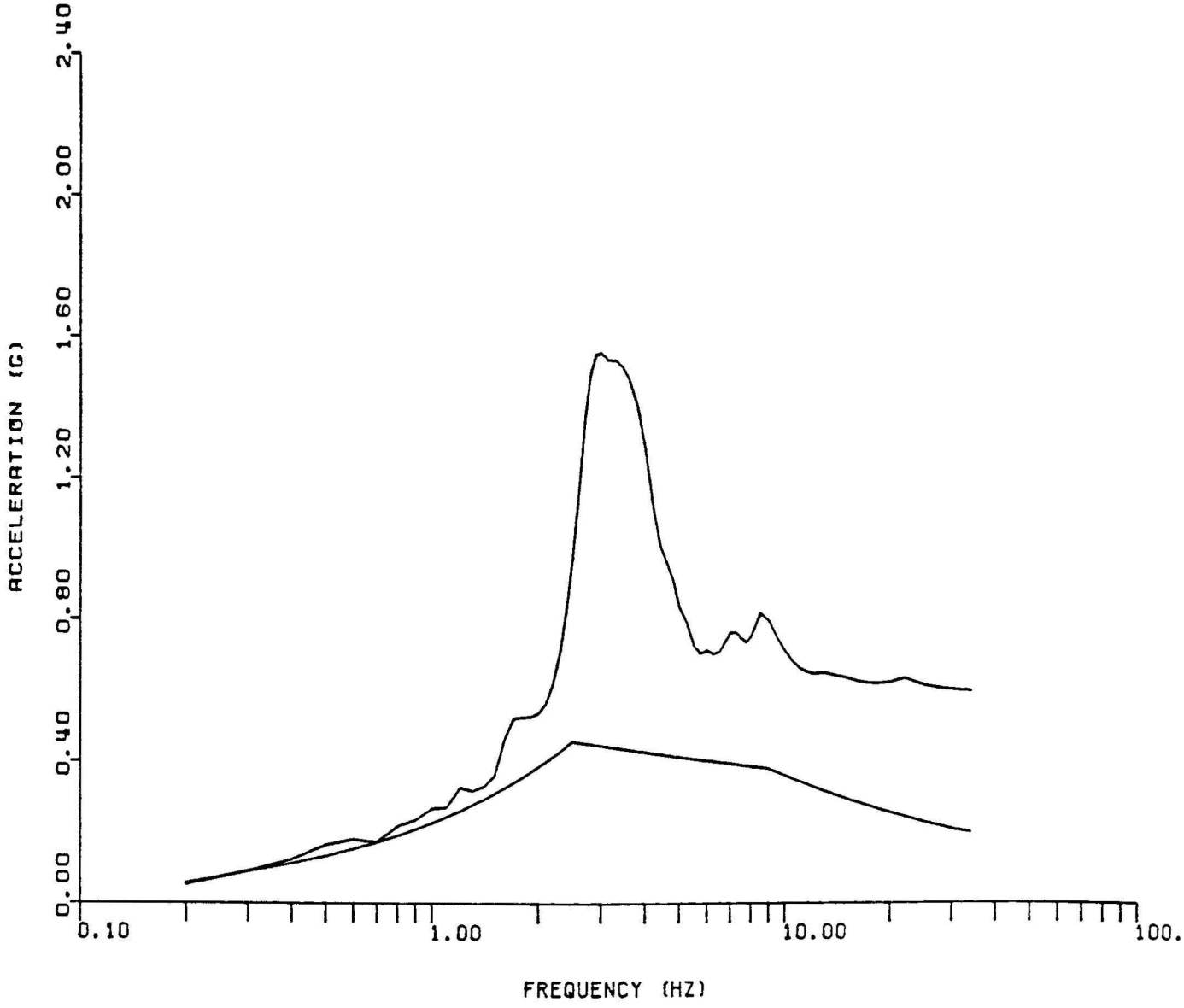

Rev. OL-0
6/86

UNION ELECTRIC COMPANY
CALLAWAY PLANT
FINAL SAFETY ANALYSIS REPORT

FIGURE 3.7-3
HORIZONTAL DESIGN RESPONSE SPECTRA
0.20 G GROUND ACCELERATION
10% DAMPING

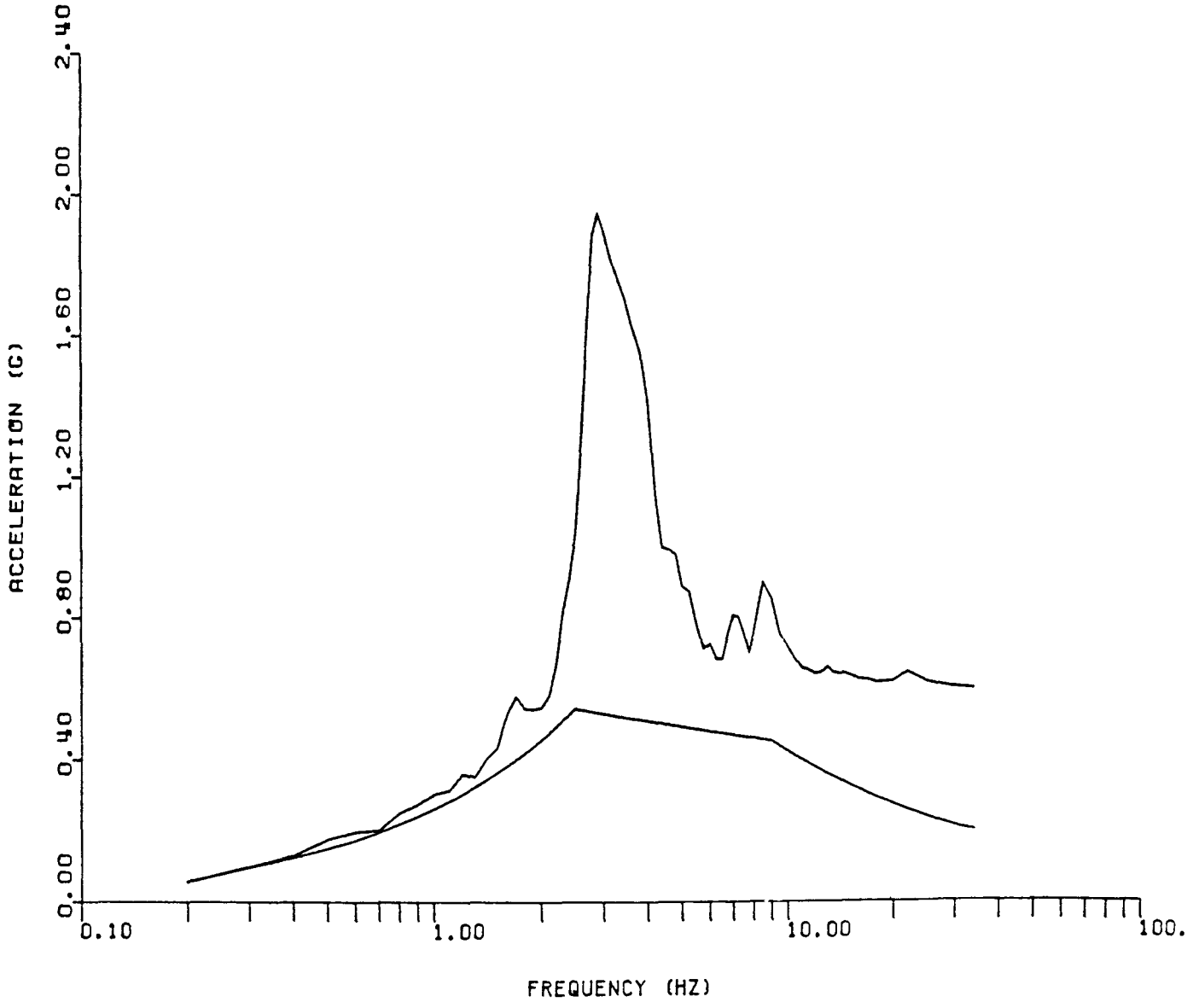

Rev. OL-0
6/86

UNION ELECTRIC COMPANY
CALLAWAY PLANT
FINAL SAFETY ANALYSIS REPORT

FIGURE 3.7-4
HORIZONTAL DESIGN RESPONSE SPECTRA
0.20 G GROUND ACCELERATION
7% DAMPING

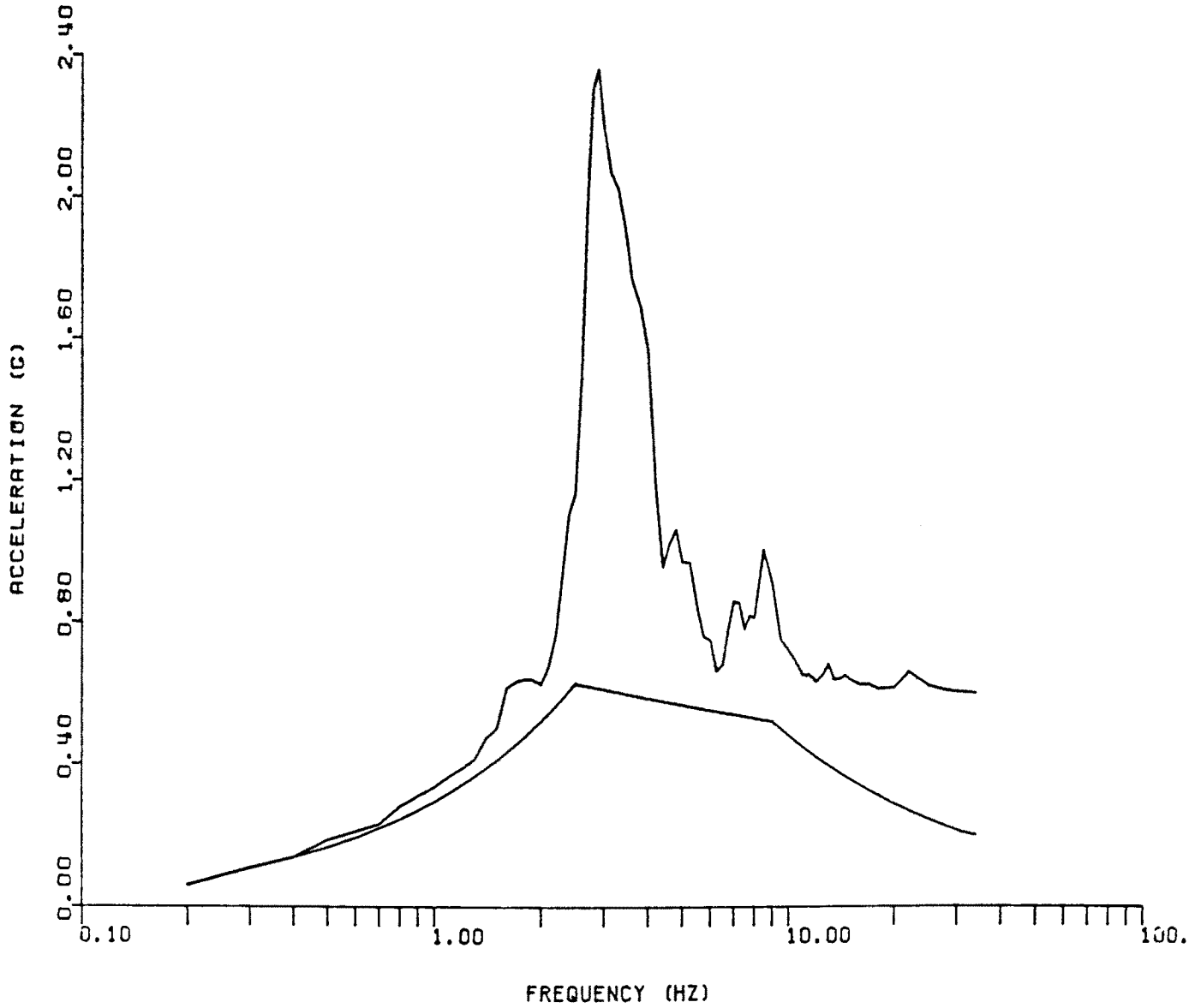

Rev. OL-0
6/86

UNION ELECTRIC COMPANY
CALLAWAY PLANT
FINAL SAFETY ANALYSIS REPORT

FIGURE 3.7-5
HORIZONTAL DESIGN RESPONSE SPECTRA
0.20 G GROUND ACCELERATION
5% DAMPING

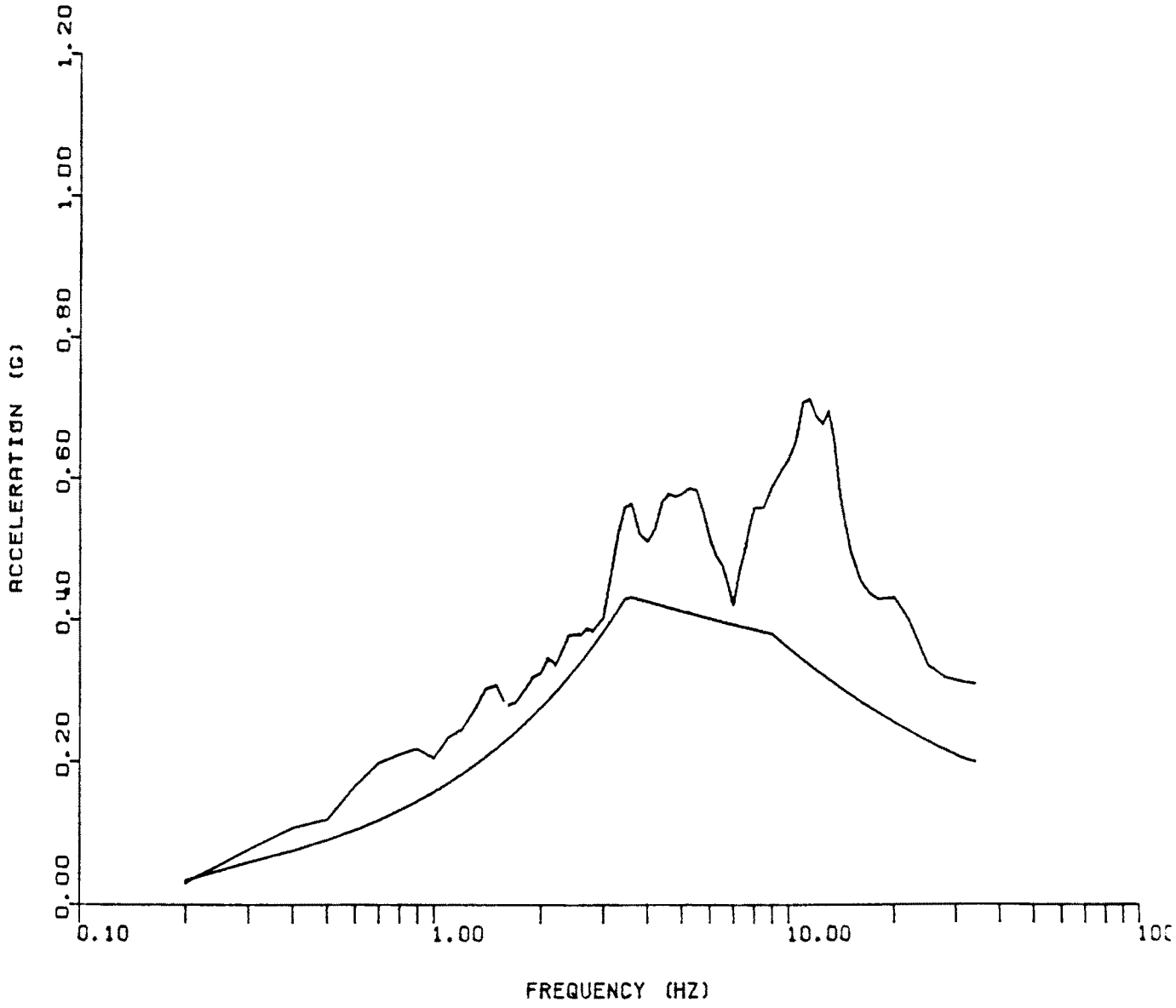

Rev. OL-0
6/86

UNION ELECTRIC COMPANY
CALLAWAY PLANT
FINAL SAFETY ANALYSIS REPORT

FIGURE 3.7-6
VERTICAL DESIGN RESPONSE SPECTRA
0.20 G GROUND ACCELERATION
10% DAMPING

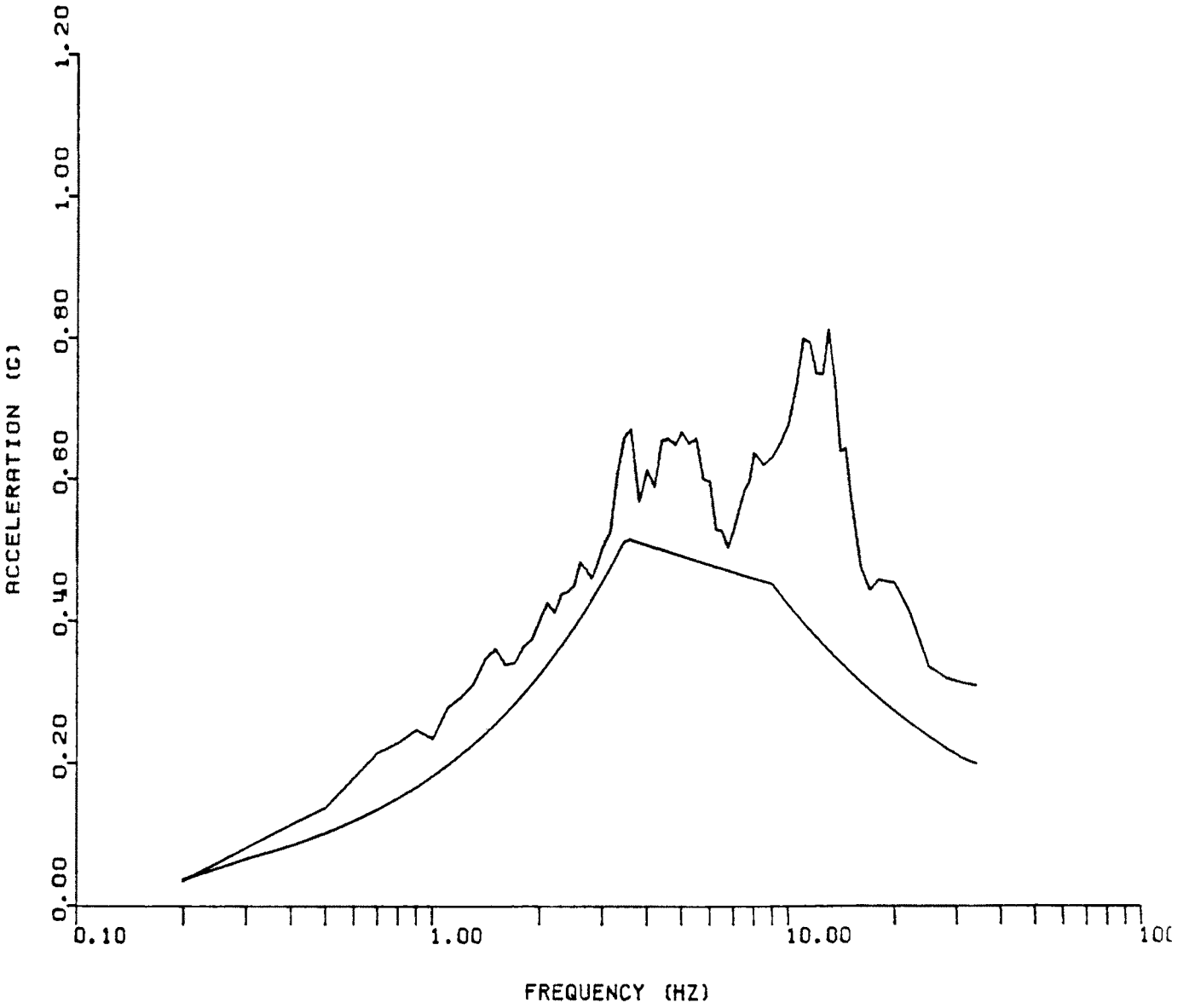

Rev. OL-0
6/86

UNION ELECTRIC COMPANY
CALLAWAY PLANT
FINAL SAFETY ANALYSIS REPORT

FIGURE 3.7-7
VERTICAL DESIGN RESPONSE SPECTRA
0.20 G GROUND ACCELERATION
7% DAMPING

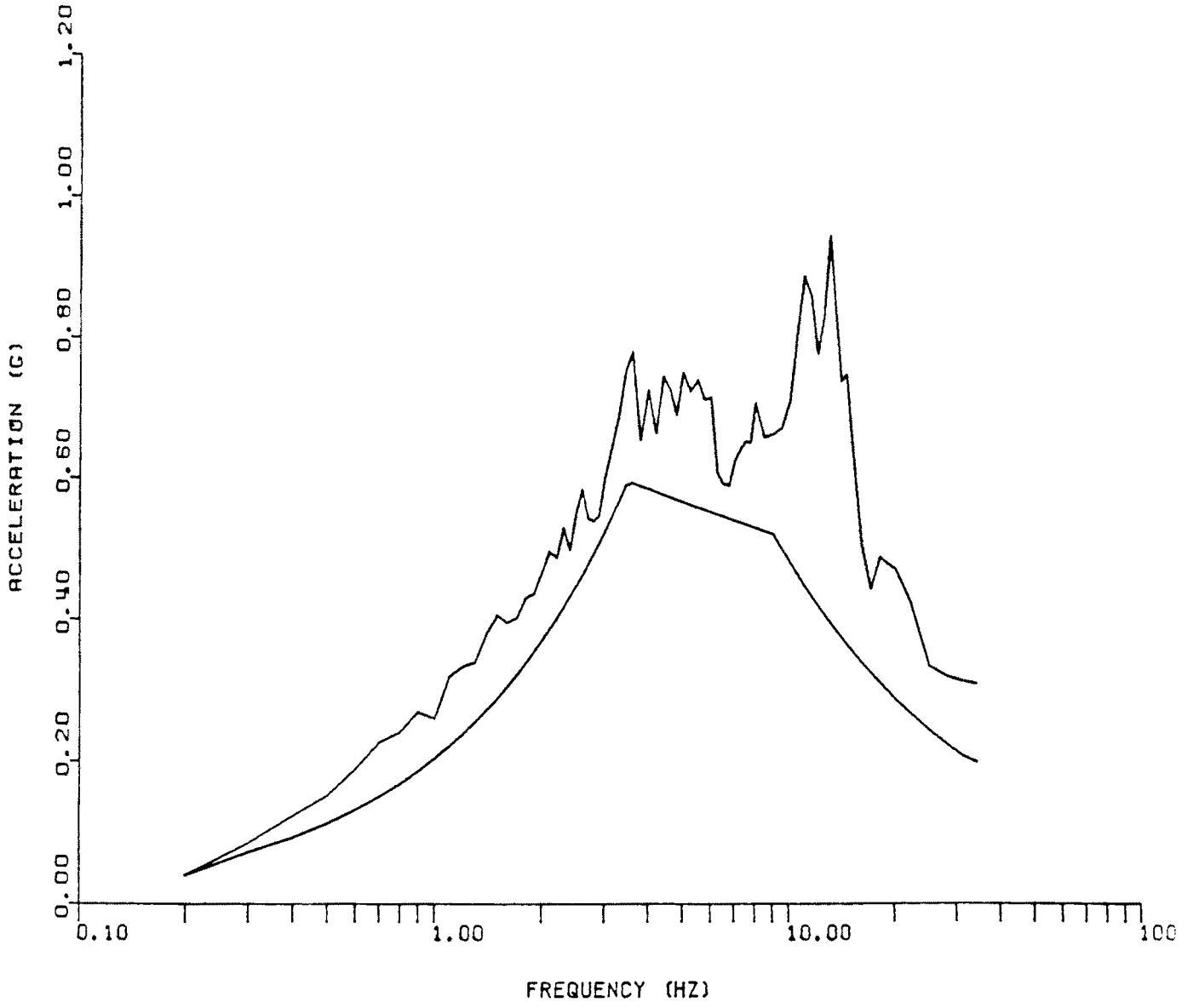

Rev. OL-0
6/86

UNION ELECTRIC COMPANY
CALLAWAY PLANT
FINAL SAFETY ANALYSIS REPORT

FIGURE 3.7-8
VERTICAL DESIGN RESPONSE SPECTRA
0.20 G GROUND ACCELERATION
5% DAMPING

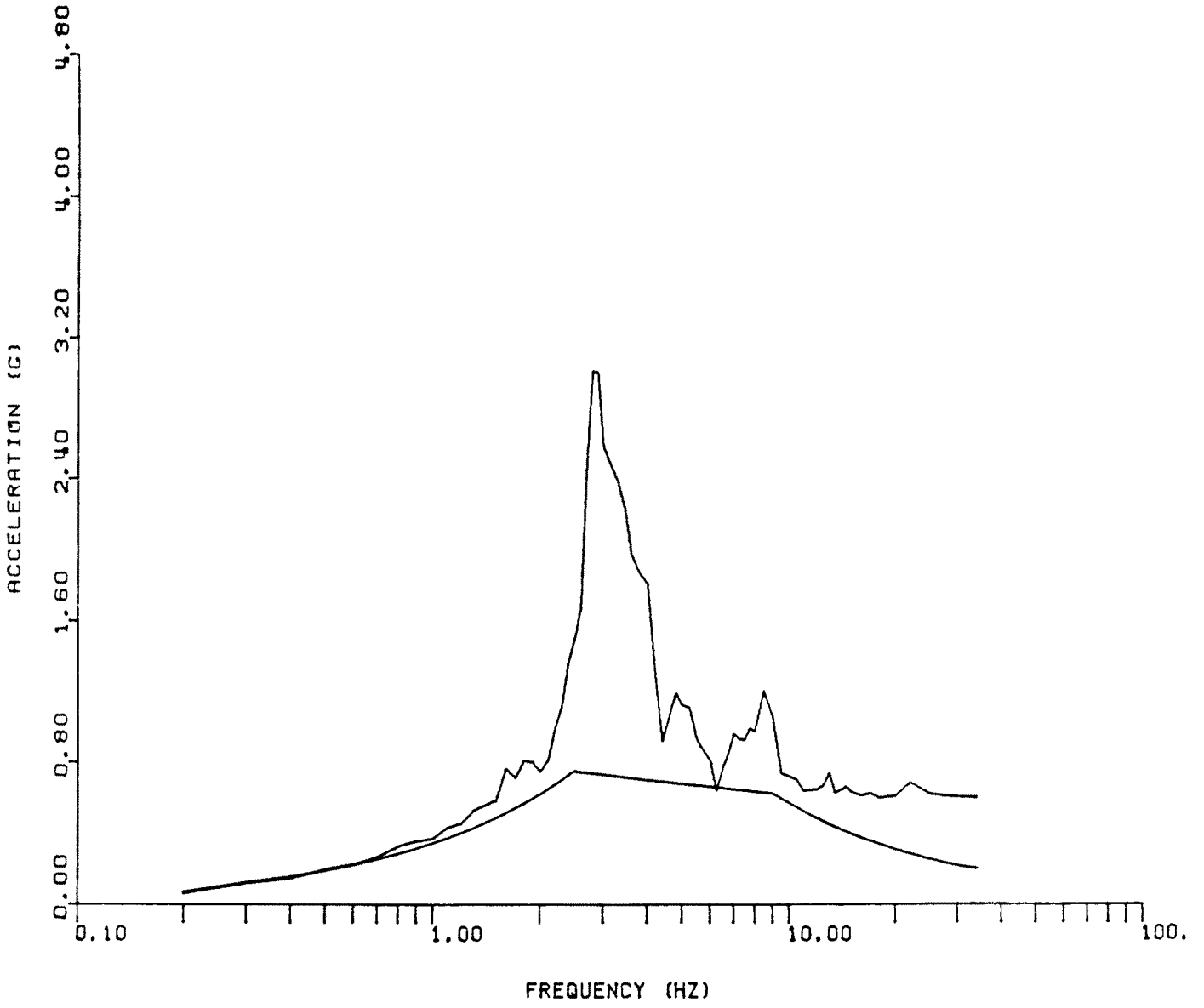

Rev. OL-0
6/86

UNION ELECTRIC COMPANY
CALLAWAY PLANT
FINAL SAFETY ANALYSIS REPORT

FIGURE 3.7-9
TYPICAL, FREE FIELD BASE
ELEVATION SPECTRA
ESWS PUMPHOUSE

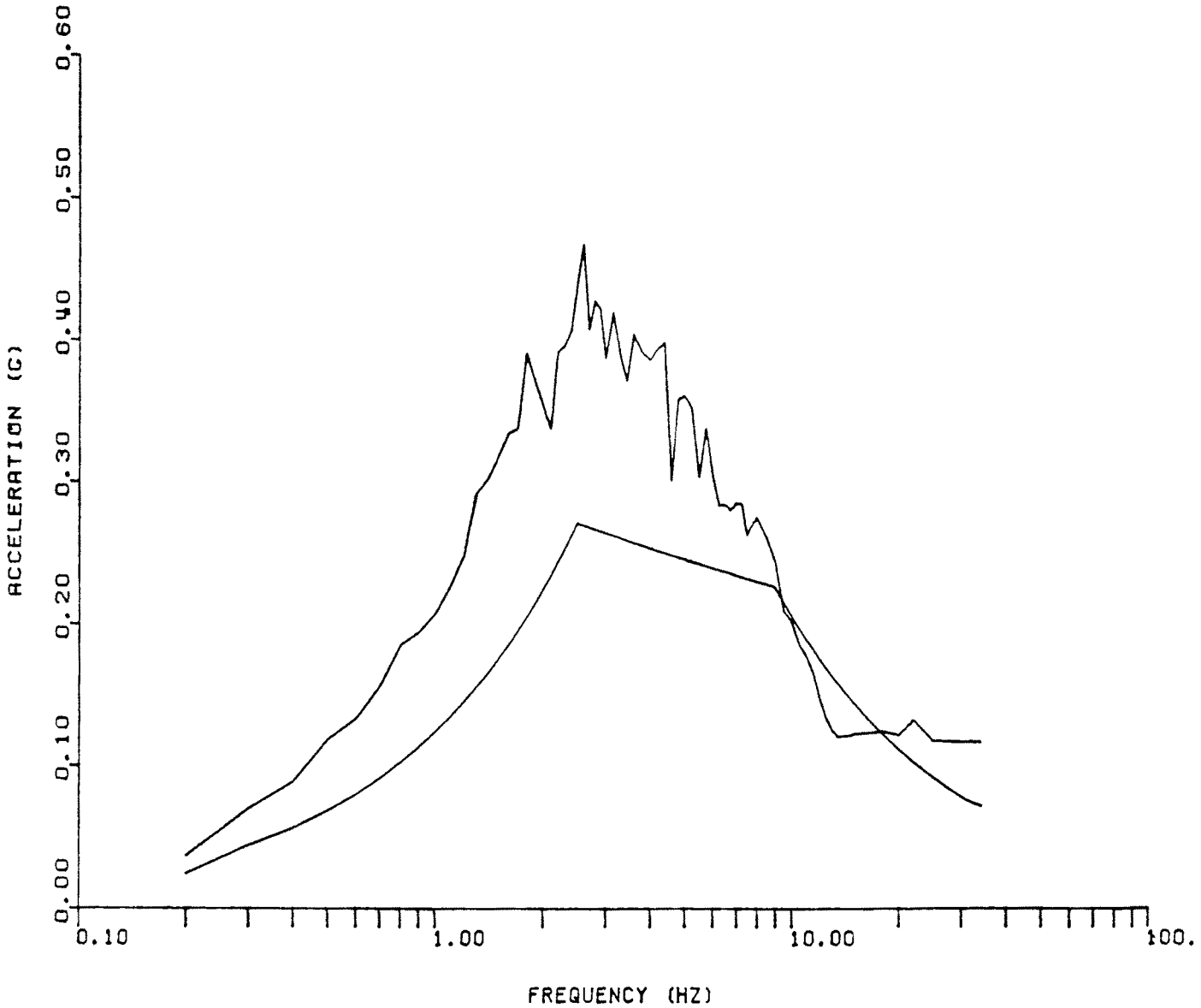

Rev. OL-0
6/86

UNION ELECTRIC COMPANY
CALLAWAY PLANT
FINAL SAFETY ANALYSIS REPORT

FIGURE 3.7-10
TYPICAL, FREE FIELD BASE
ELEVATION SPECTRA
UHS COOLING TOWER

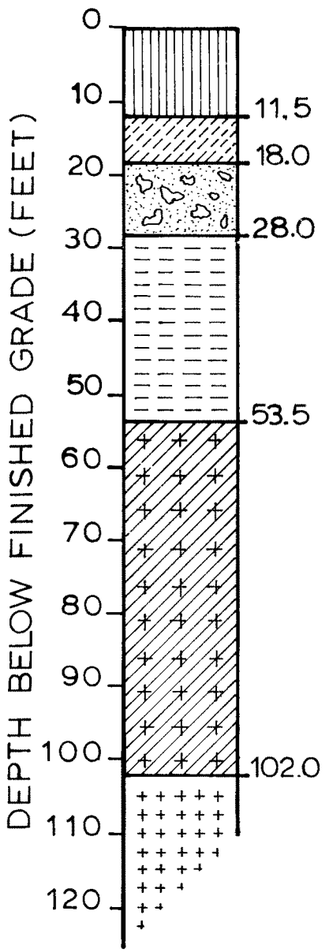

MATERIAL	LAYER THICKNESS (FEET)	SSE = 0.20g TYPICAL SHEAR MODULUS G (KSF)	SSE = 0.20g TYPICAL DAMPING FRACTION	OBE = 0.12g TYPICAL SHEAR MODULUS G (KSF)	OBE = 0.12g TYPICAL DAMPING FRACTION	POISSON'S RATIO	UNIT WEIGHT (PCF)	REMARKS
MODIFIED LOESS	11.5	430 TO 320	.057 TO .075	540 TO 400	.045 TO .059	.47	126	STRAIN DEPENDENT SHEAR MODULUS, AND DAMPING. Gmax = 978 (KSF) AT .0001% STRAIN.
ACCRETION GLEY	6.5	540 TO 380	.060 TO .082	530 TO 470	.051 TO .066	.47	127	STRAIN DEPENDENT SHEAR MODULUS, AND DAMPING. G max = 3,560 (KSF) AT .0001% STRAIN.
GLACIAL TILL	10.0	960 TO 620	.056 TO .078	1,230 TO 690	.048 TO .063	.47	134	STRAIN DEPENDENT SHEAR MODULUS, AND DAMPING. G max = 5,504 (KSF) AT .0001% STRAIN.
GRAYDON CHERT CONGLOMERATE	25.5	10,940 TO 8,990	.037 TO .043	12,360 TO 11,050	.033 TO .037	.39	138	STRAIN DEPENDENT SHEAR MODULUS, AND DAMPING. Gmax=18,900 (KSF) AT .0001% STRAIN.
BURLINGTON, BUSHBERG, SNYDER CREEK AND CALLAWAY FORMATION (ROCK)	48.5	65,380	.009	65,380	.009	.42	160	CONSTANT SHEAR MODULUS, AND DAMPING.
COTTER-JEFFERSON CITY FORMATION	BEDROCK	—	—	—	—	—	—	RIGID BOUNDARY FOR FLUSH PROGRAM. $V_S \geq 4{,}000$ FPS.

Rev. OL-0
6/86

UNION ELECTRIC COMPANY
CALLAWAY PLANT
FINAL SAFETY ANALYSIS REPORT

FIGURE 3.7-11
FREE FIELD MEDIA
TYPICAL SUBSURFACE PROFILE
AND SOIL PROPERTIES
SSE AND OBE

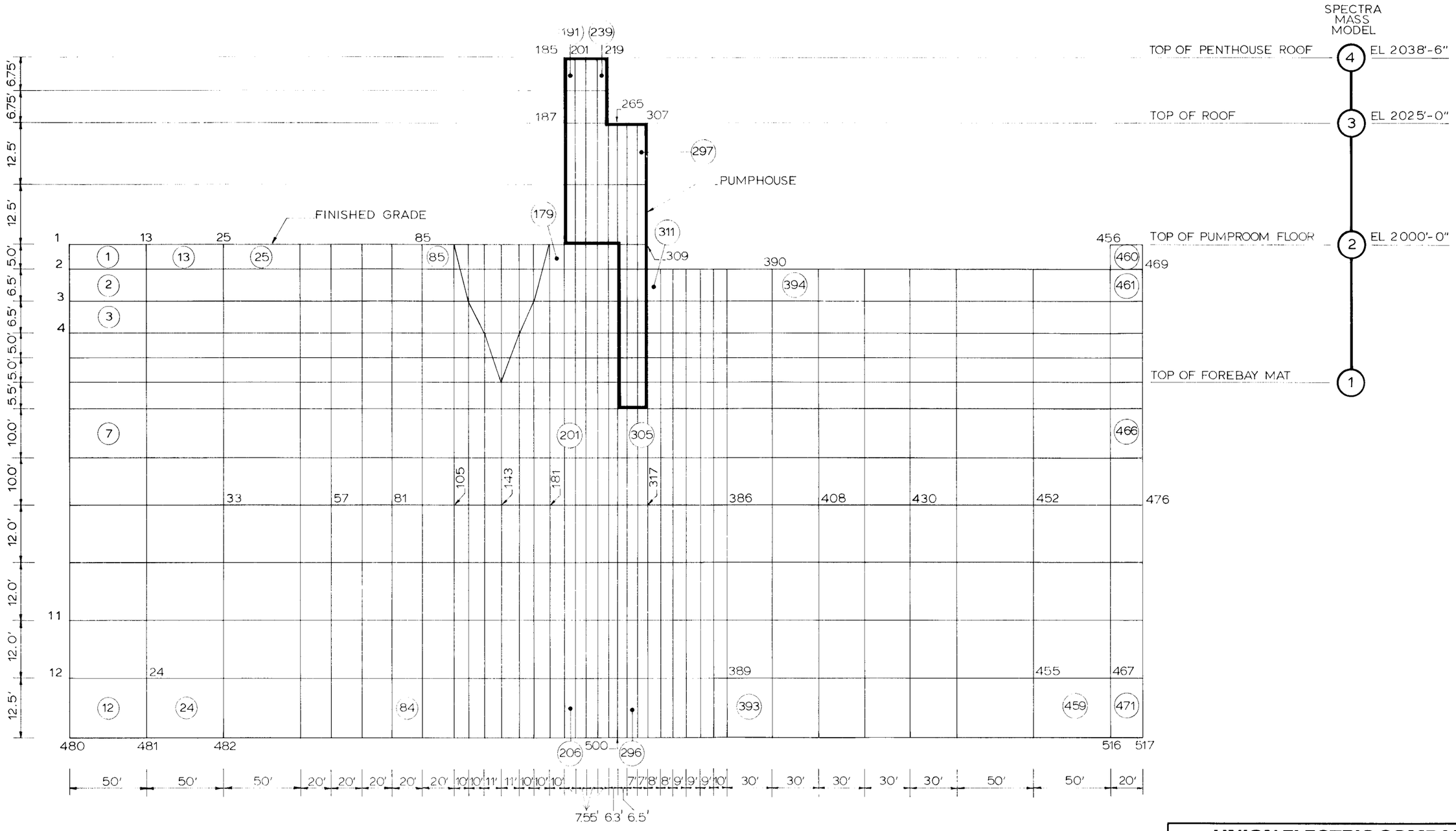

Rev. OL-0
6/86

UNION ELECTRIC COMPANY
CALLAWAY PLANT
FINAL SAFETY ANALYSIS REPORT

FIGURE 3.7-12
MATHEMATICAL MODEL FOR ESWS PUMPHOUSE FOR EAST-WEST AND VERTICAL ANALYSIS

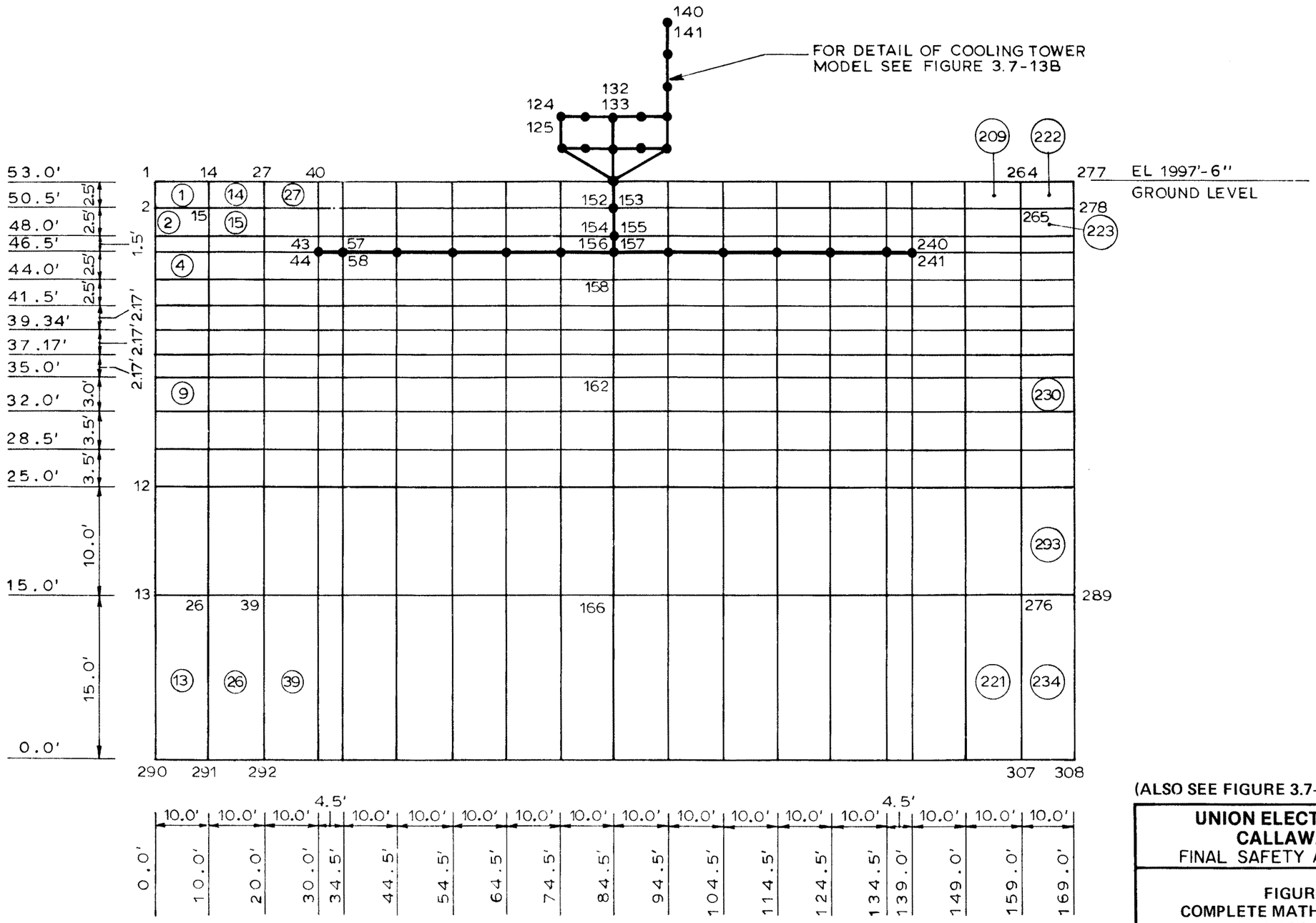

(ALSO SEE FIGURE 3.7-13B)

Rev. OL-0
6/86

UNION ELECTRIC COMPANY
CALLAWAY PLANT
FINAL SAFETY ANALYSIS REPORT

FIGURE 3.7-13A
COMPLETE MATHEMATICAL MODEL
UHS COOLING TOWER
NORTH-SOUTH ANALYSIS

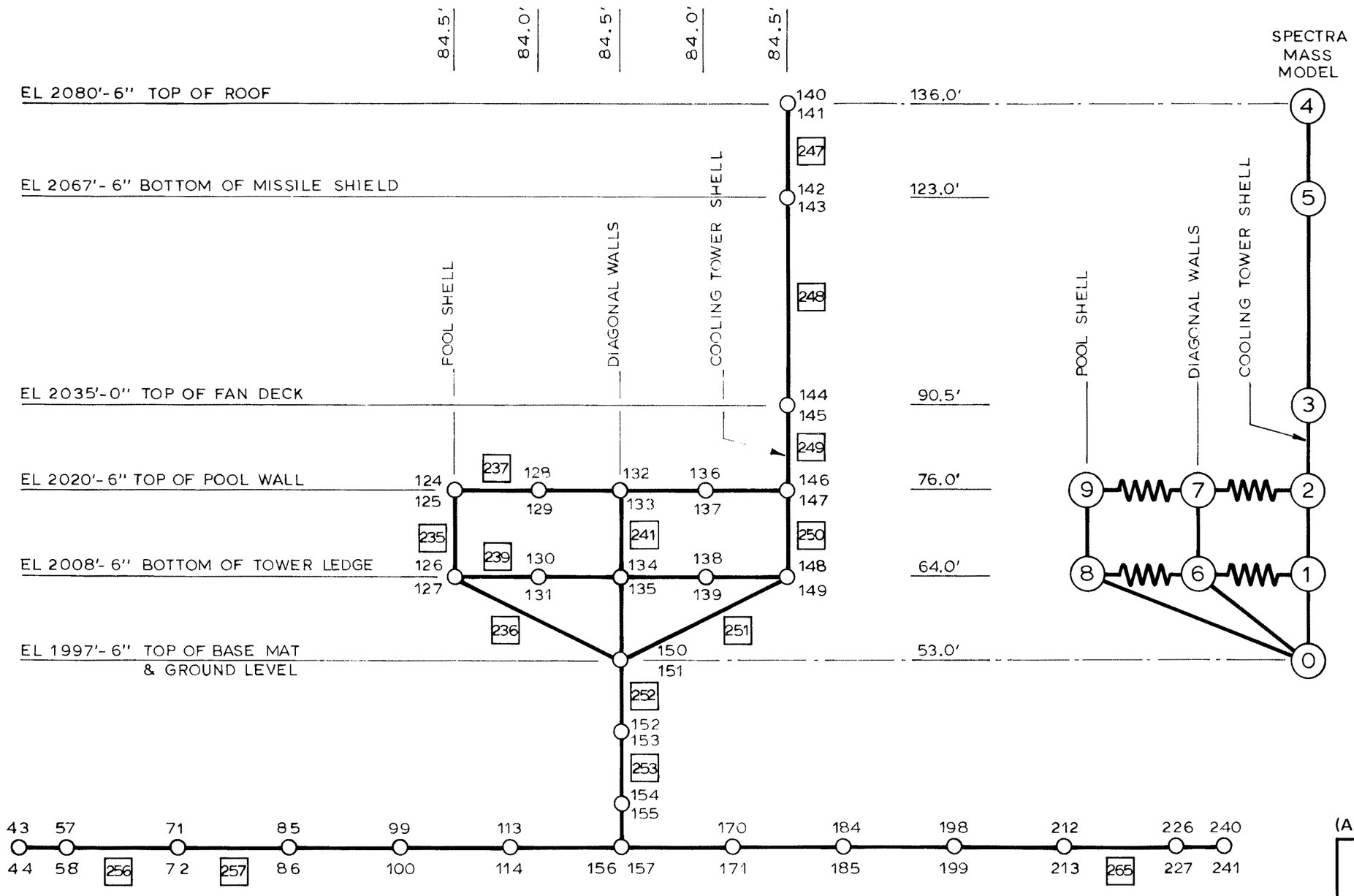

(ALSO SEE FIGURE 3.7-13A)

Rev. OL-0
6/86

UNION ELECTRIC COMPANY
CALLAWAY PLANT
FINAL SAFETY ANALYSIS REPORT

FIGURE 3.7-13B
SUPPLEMENTAL MATHEMATICAL MODEL
UHS COOLING TOWER
NORTH-SOUTH ANALYSIS

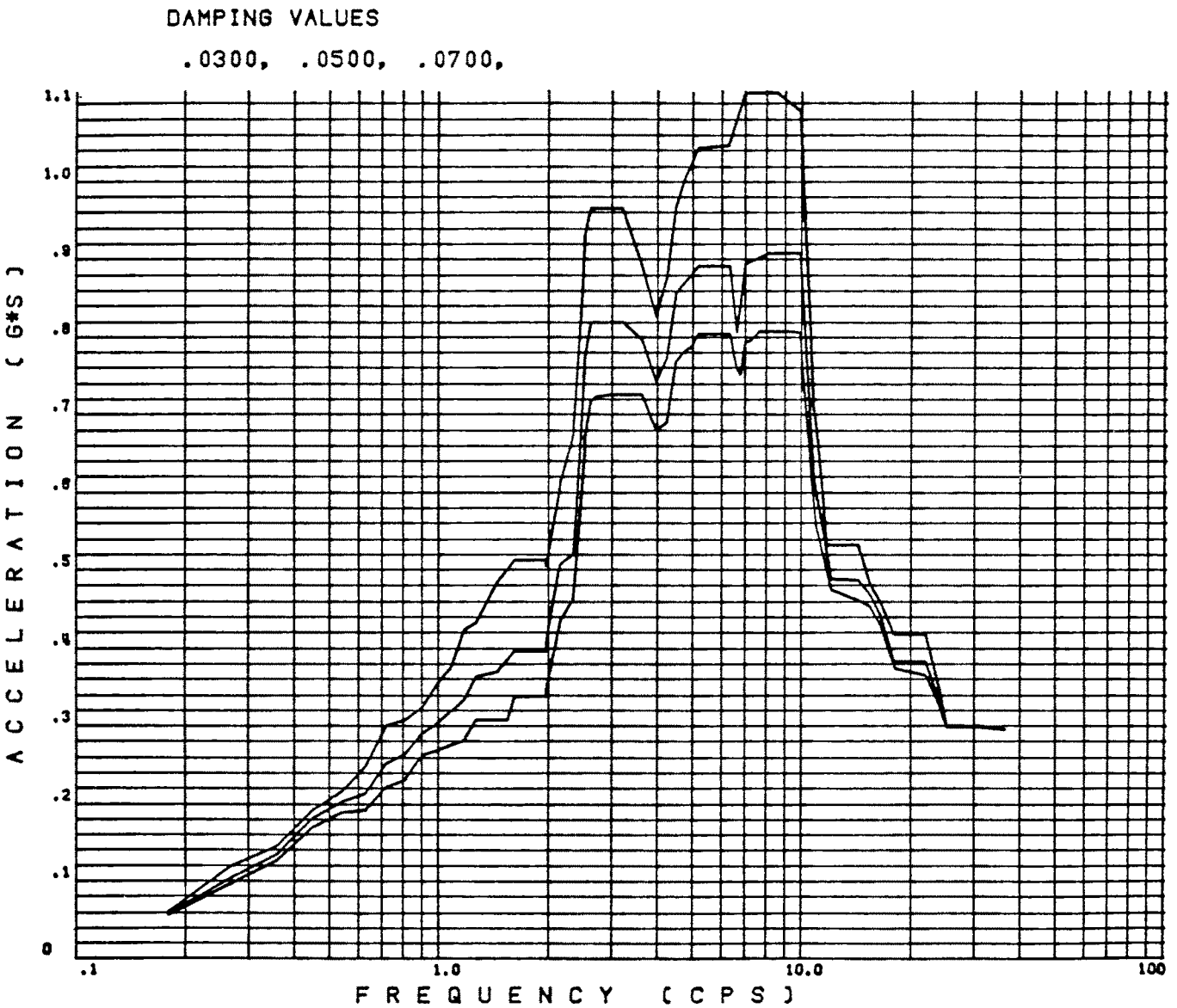

DESIGN FLOOR RESPONSE SPECTRA

MASS POINT 4
REF. FIGURE 3.7-12

Rev. OL-0
6/86

UNION ELECTRIC COMPANY
CALLAWAY PLANT
FINAL SAFETY ANALYSIS REPORT

FIGURE 3.7-14A
SPECTRA – ESWS PUMPHOUSE
SSE
NORTH-SOUTH DIRECTION
TOP OF PENTHOUSE ROOF

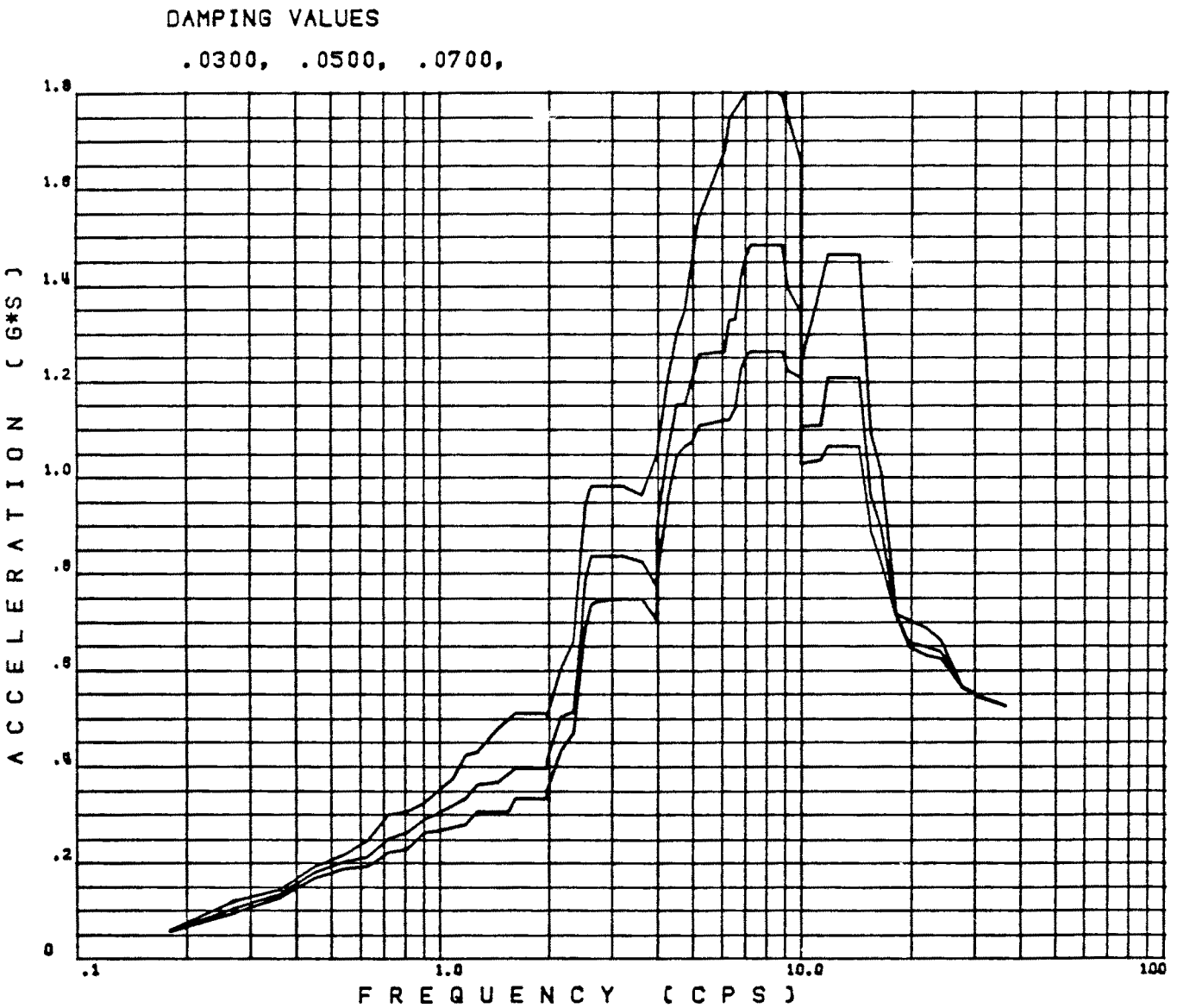

DESIGN FLOOR RESPONSE SPECTRA

MASS POINT 4
REF. FIGURE 3.7-12

Rev. OL-0
6/86

UNION ELECTRIC COMPANY
CALLAWAY PLANT
FINAL SAFETY ANALYSIS REPORT

FIGURE 3.7-14B
SPECTRA – ESWS PUMPHOUSE
SSE
EAST-WEST DIRECTION
TOP OF PENTHOUSE ROOF

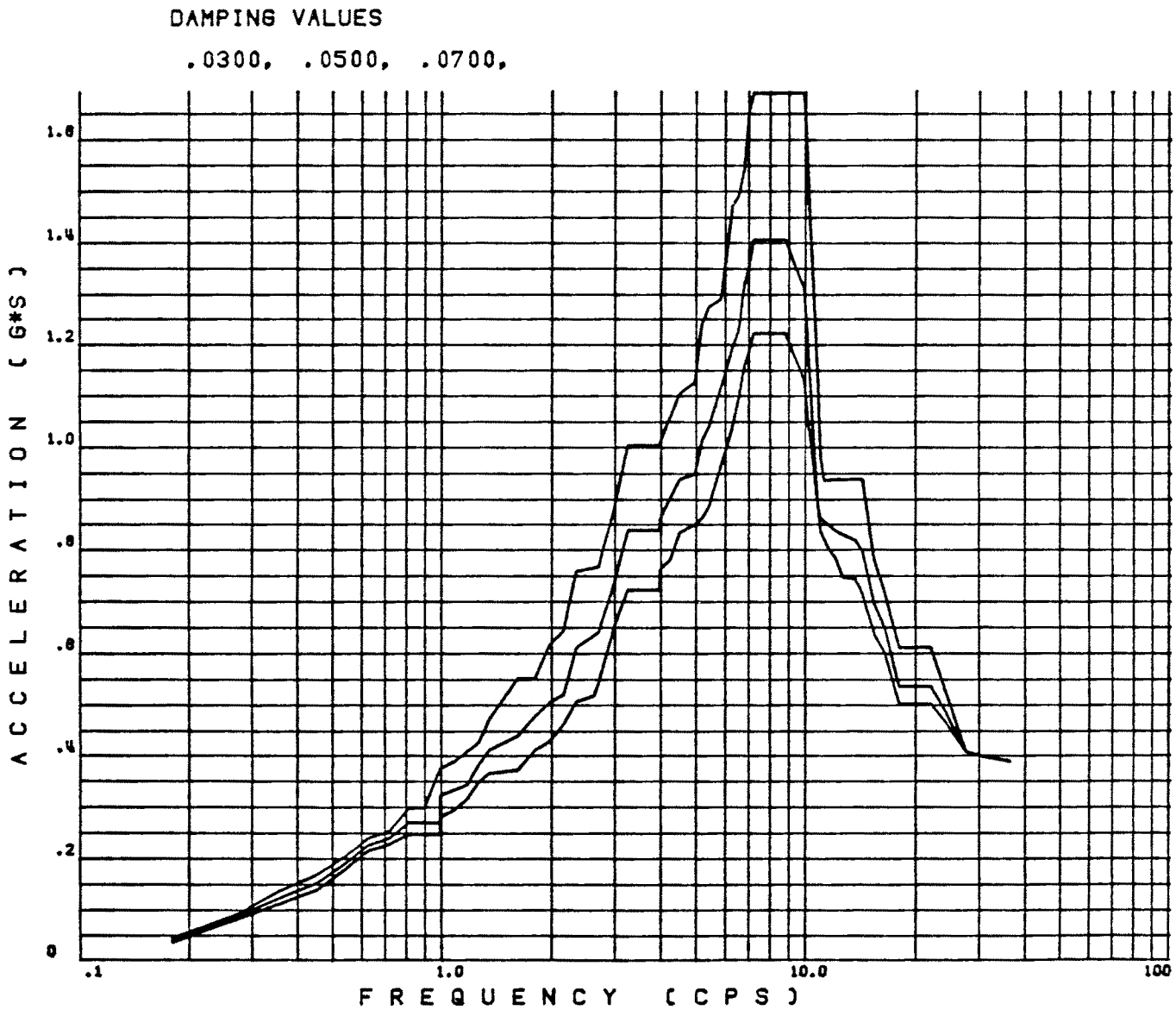

DESIGN FLOOR RESPONSE SPECTRA

MASS POINT 4
REF. FIGURE 3.7-12

Rev. OL-0
6/86

UNION ELECTRIC COMPANY
CALLAWAY PLANT
FINAL SAFETY ANALYSIS REPORT

FIGURE 3.7-14C
SPECTRA – ESWS PUMPHOUSE
SSE
VERTICAL DIRECTION
TOP OF PENTHOUSE ROOF

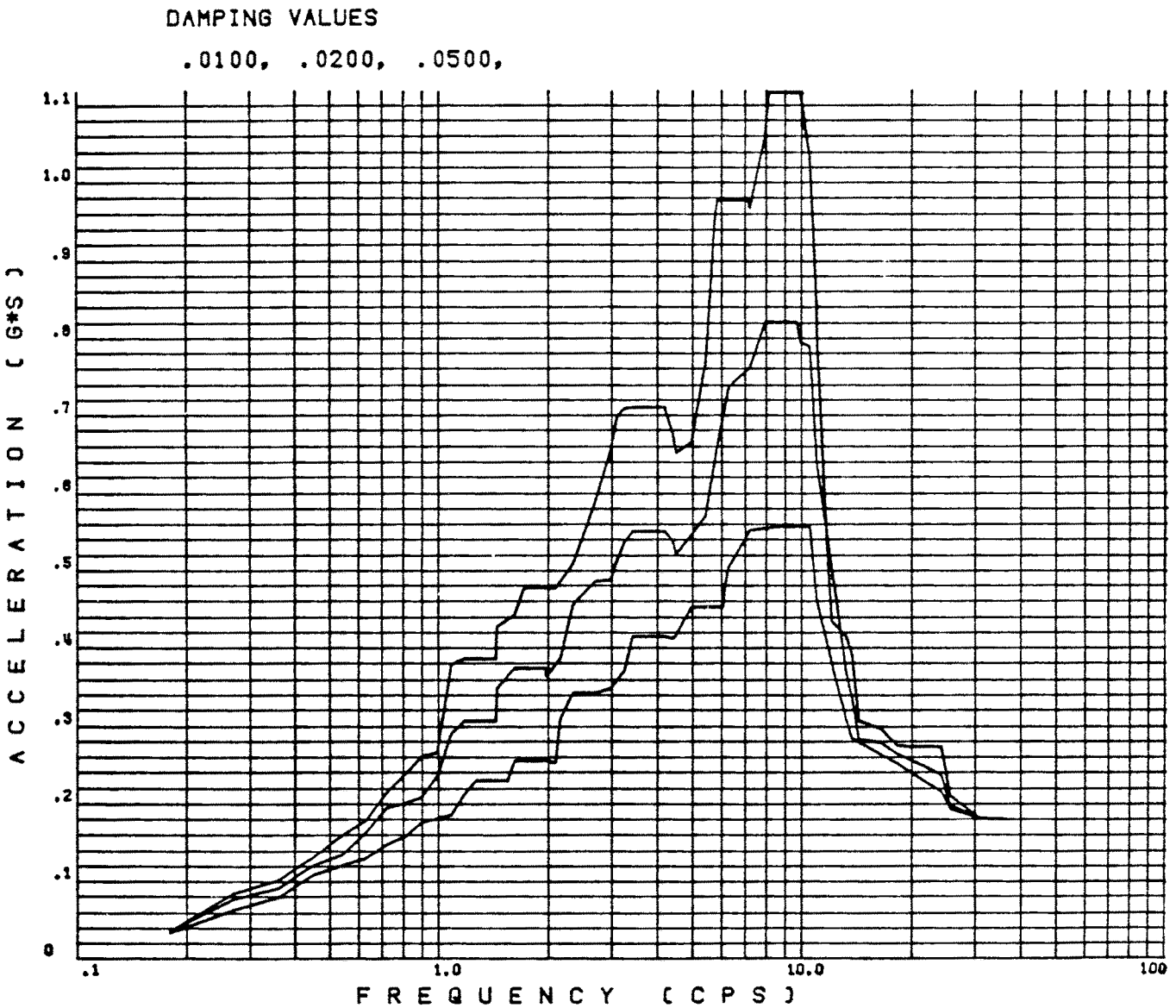

DESIGN FLOOR RESPONSE SPECTRA

MASS POINT 4
REF. FIGURE 3.7-12

Rev. OL-0
6/86

UNION ELECTRIC COMPANY
CALLAWAY PLANT
FINAL SAFETY ANALYSIS REPORT

FIGURE 3.7-14D
SPECTRA – ESWS PUMPHOUSE
OBE
NORTH-SOUTH DIRECTION
TOP OF PENTHOUSE ROOF

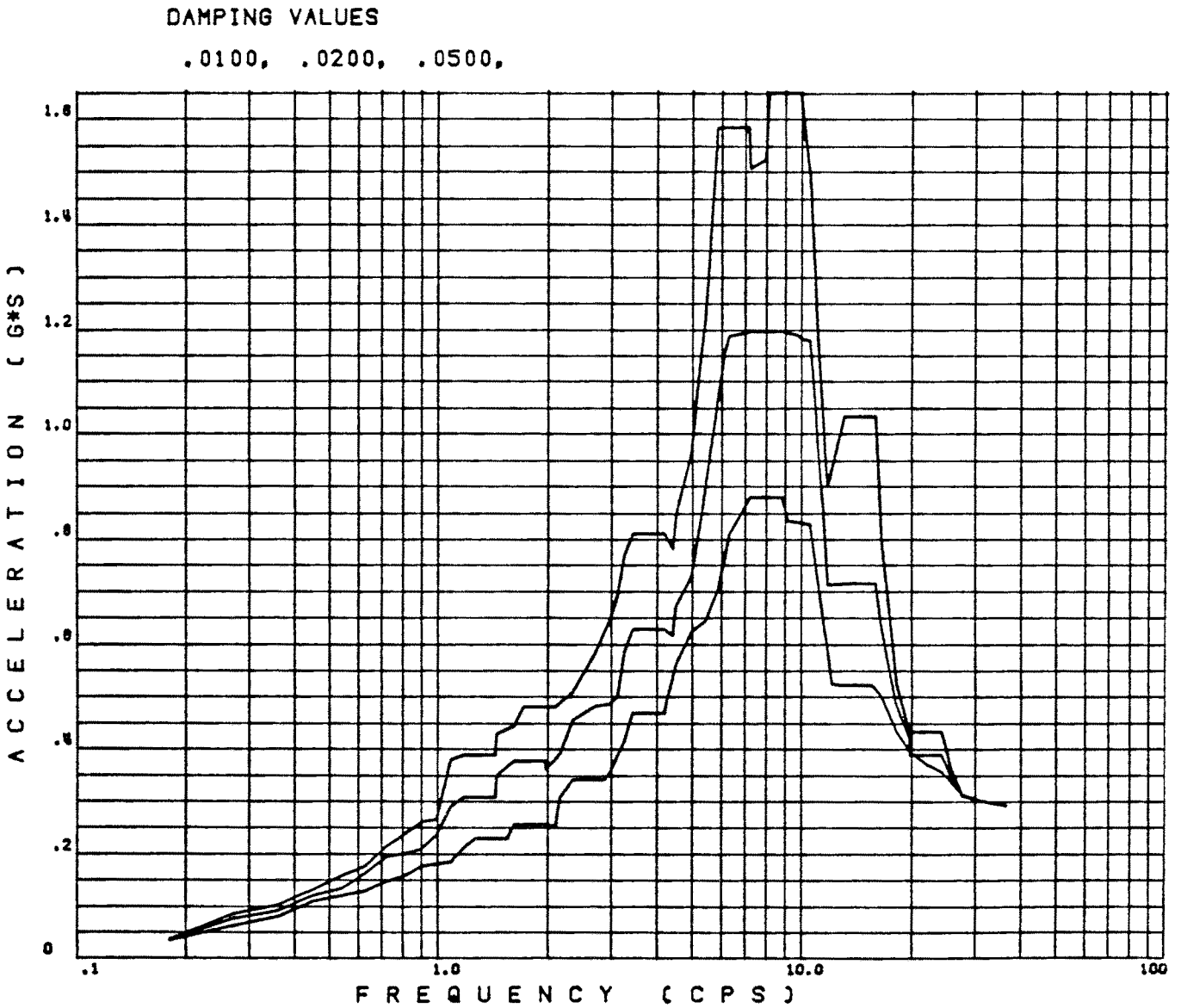

DESIGN FLOOR RESPONSE SPECTRA

MASS POINT 4
REF. FIGURE 3.7-12

Rev. OL-0
6/86

UNION ELECTRIC COMPANY
CALLAWAY PLANT
FINAL SAFETY ANALYSIS REPORT

FIGURE 3.7-14E
SPECTRA – ESWS PUMPHOUSE
OBE
EAST-WEST DIRECTION
TOP OF PENTHOUSE ROOF

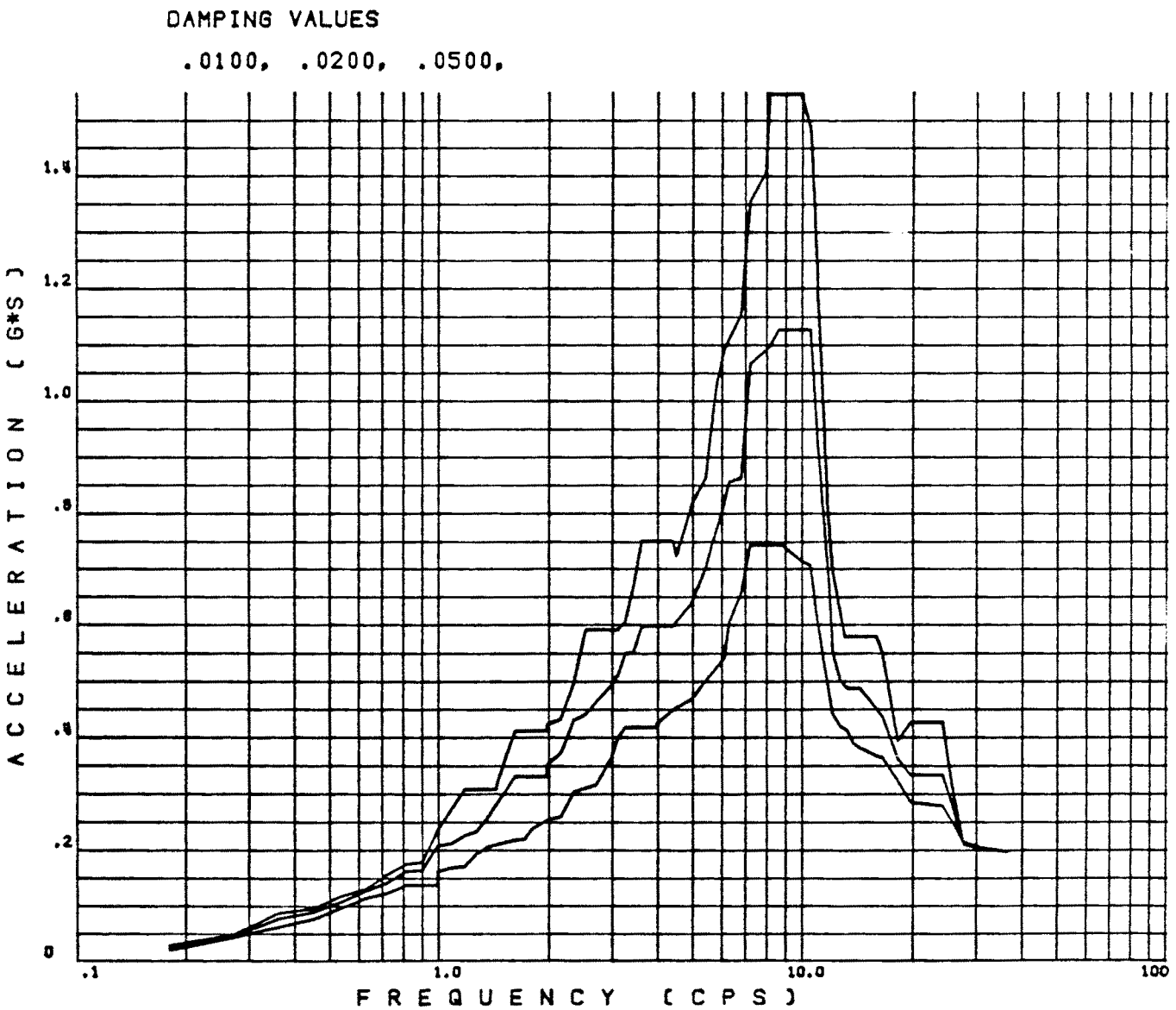

DESIGN FLOOR RESPONSE SPECTRA

MASS POINT 4
REF. FIGURE 3.7-12

Rev. OL-0
6/86

UNION ELECTRIC COMPANY
CALLAWAY PLANT
FINAL SAFETY ANALYSIS REPORT

FIGURE 3.7-14F
SPECTRA – ESWS PUMPHOUSE
OBE
VERTICAL DIRECTION
TOP OF PENTHOUSE ROOF

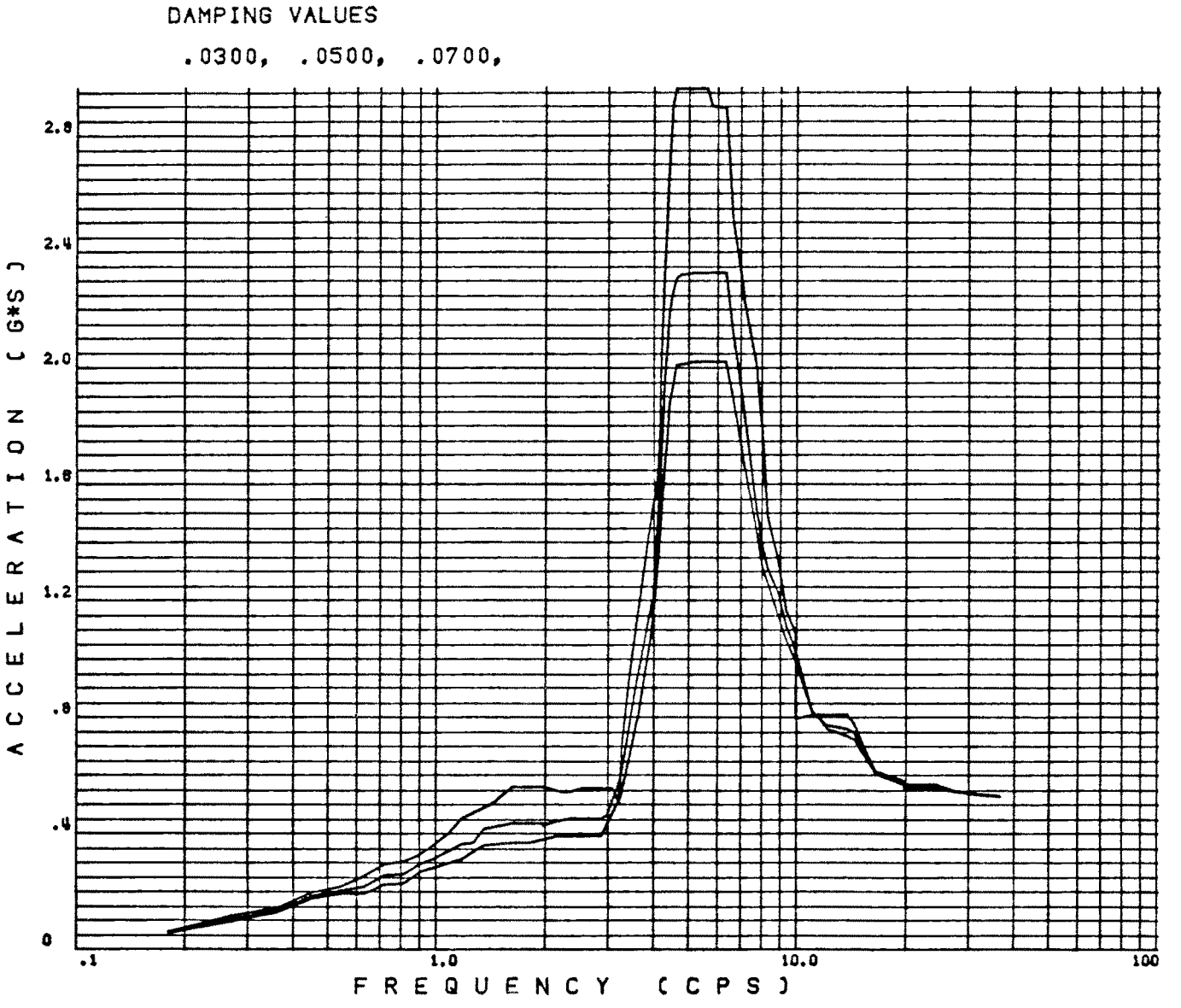

DESIGN FLOOR RESPONSE SPECTRA

MASS POINT 4
REF. FIGURE 3.7-13A & B

Rev. OL-0
6/86

UNION ELECTRIC COMPANY
CALLAWAY PLANT
FINAL SAFETY ANALYSIS REPORT

FIGURE 3.7-15A
SPECTRA – UHS COOLING TOWER
SSE
NORTH-SOUTH DIRECTION
TOP OF ROOF

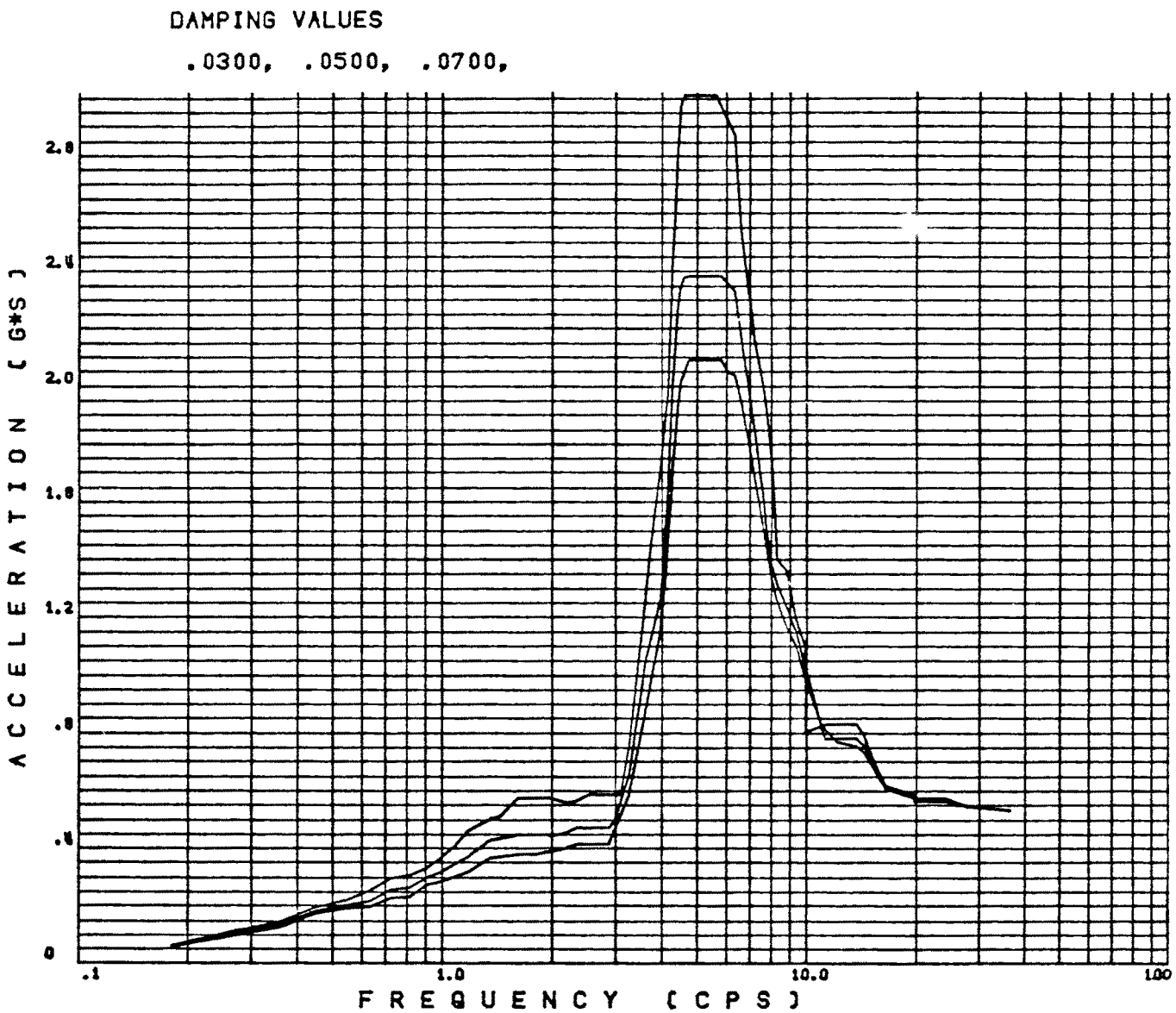

DESIGN FLOOR RESPONSE SPECTRA

MASS POINT 4
REF. FIGURE 3.7-13A & B

Rev. OL-0
6/86

UNION ELECTRIC COMPANY
CALLAWAY PLANT
FINAL SAFETY ANALYSIS REPORT

FIGURE 3.7-15B
SPECTRA – UHS COOLING TOWER
SSE
EAST-WEST DIRECTION
TOP OF ROOF

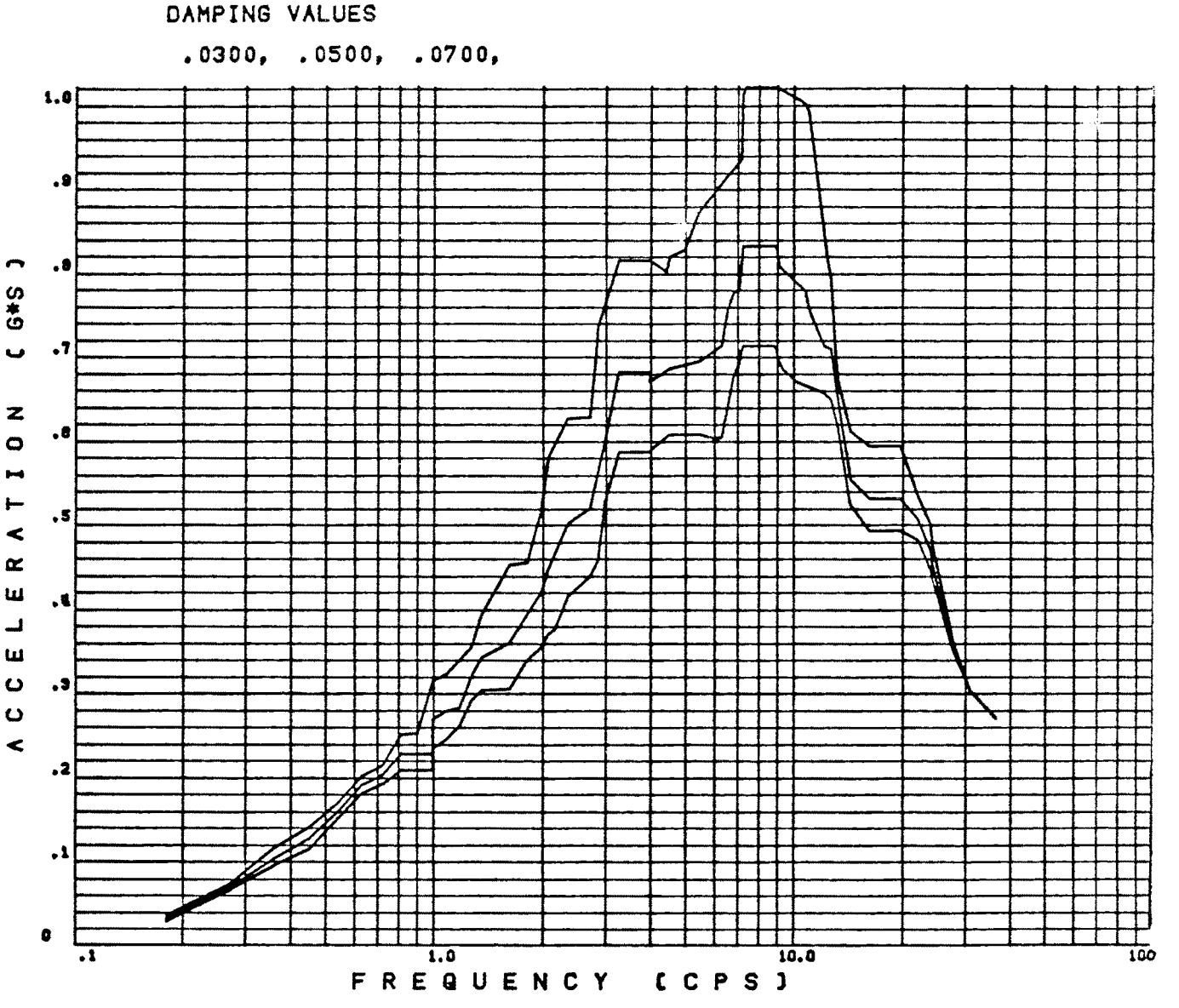

DESIGN FLOOR RESPONSE SPECTRA

MASS POINT 4
REF. FIGURE 3.7-13A & B

Rev. OL-0
6/86

UNION ELECTRIC COMPANY
CALLAWAY PLANT
FINAL SAFETY ANALYSIS REPORT

FIGURE 3.7-15C
SPECTRA – UHS COOLING TOWER
SSE
VERTICAL DIRECTION
TOP OF ROOF

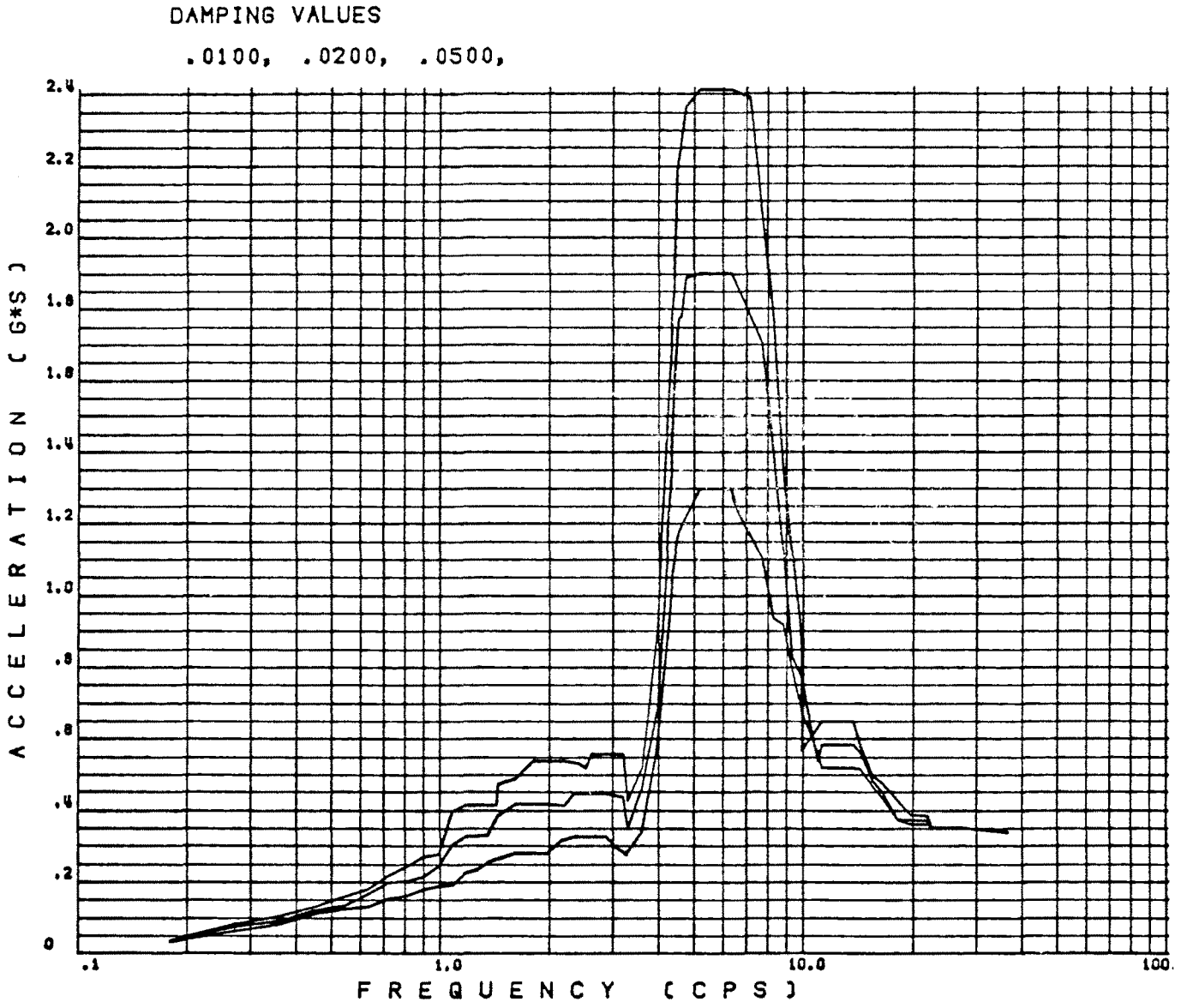

DESIGN FLOOR RESPONSE SPECTRA

MASS POINT 4
REF. FIGURE 3.7-13A & B

Rev. OL-0
6/86

UNION ELECTRIC COMPANY
CALLAWAY PLANT
FINAL SAFETY ANALYSIS REPORT

FIGURE 3.7-15D
SPECTRA – UHS COOLING TOWER
OBE
NORTH-SOUTH DIRECTION
TOP OF ROOF

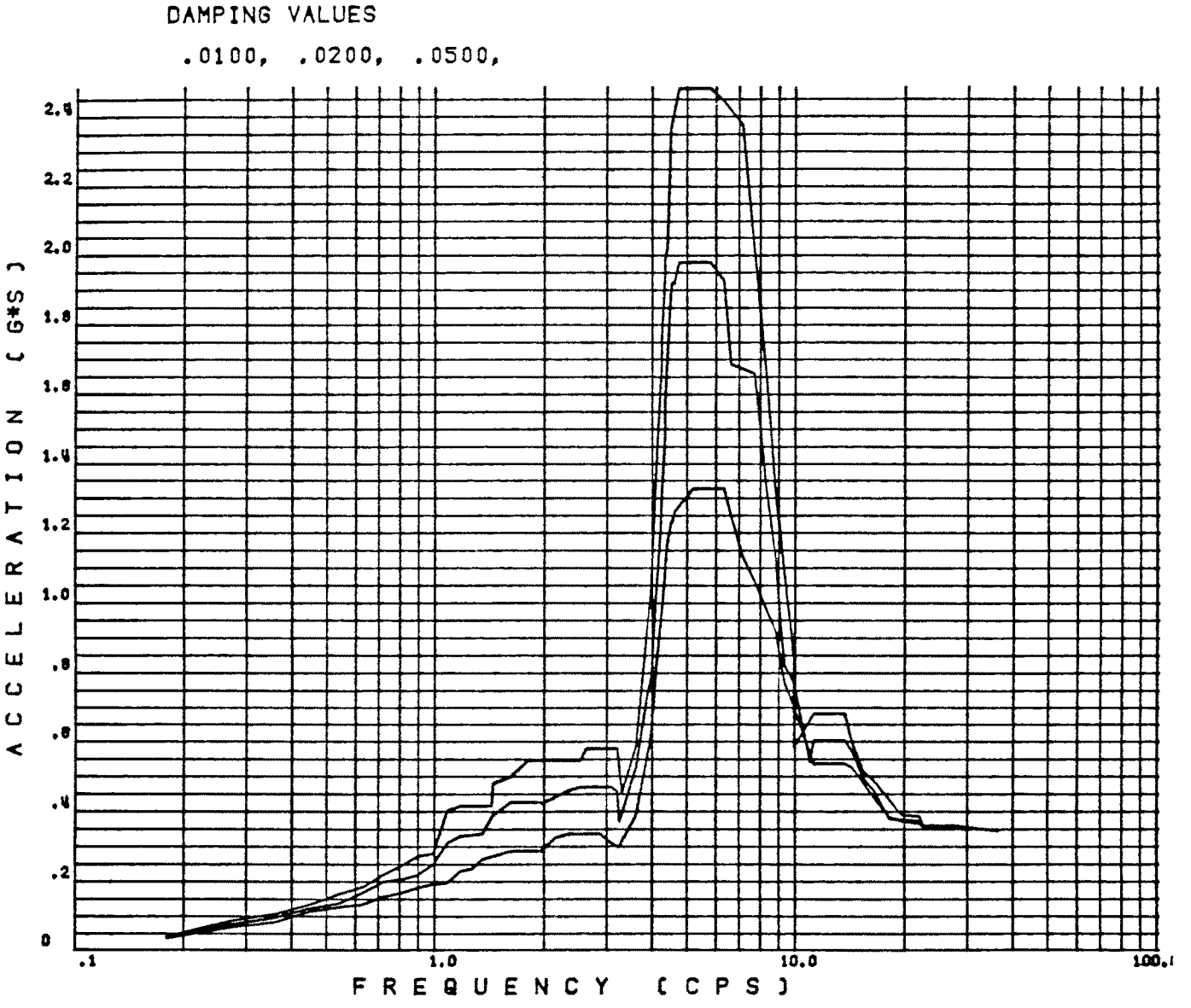

DESIGN FLOOR RESPONSE SPECTRA

MASS POINT 4
REF. FIGURE 3.7-13A & B

Rev. OL-0
6/86

UNION ELECTRIC COMPANY
CALLAWAY PLANT
FINAL SAFETY ANALYSIS REPORT

FIGURE 3.7-15E
SPECTRA – UHS COOLING TOWER
OBE
EAST-WEST DIRECTION
TOP OF ROOF

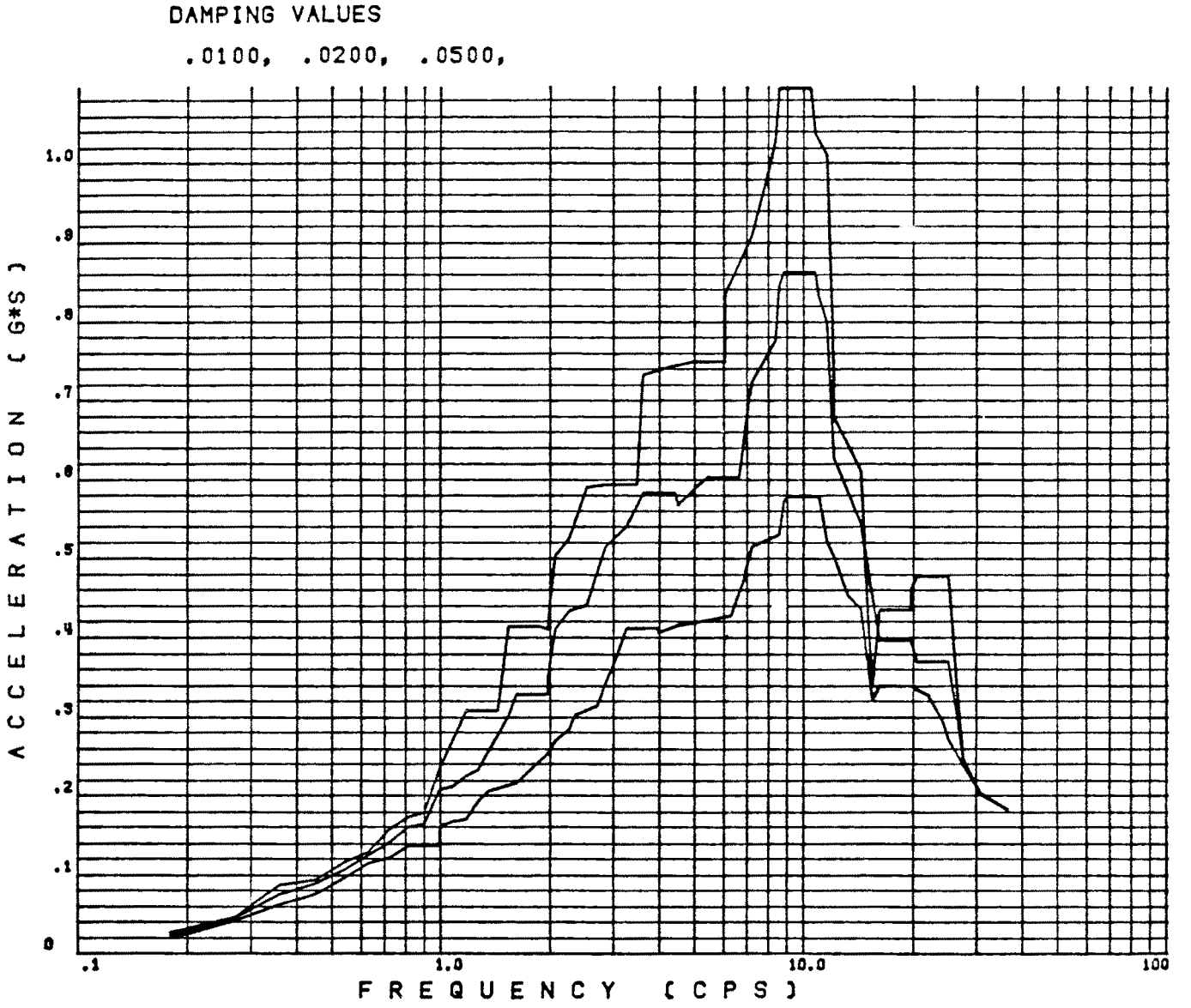

DESIGN FLOOR RESPONSE SPECTRA

MASS POINT 4
REF. FIGURE 3.7-13A & B

Rev. OL-0
6/86

UNION ELECTRIC COMPANY
CALLAWAY PLANT
FINAL SAFETY ANALYSIS REPORT

FIGURE 3.7-15F
SPECTRA – UHS COOLING TOWER
OBE
VERTICAL DIRECTION
TOP OF ROOF

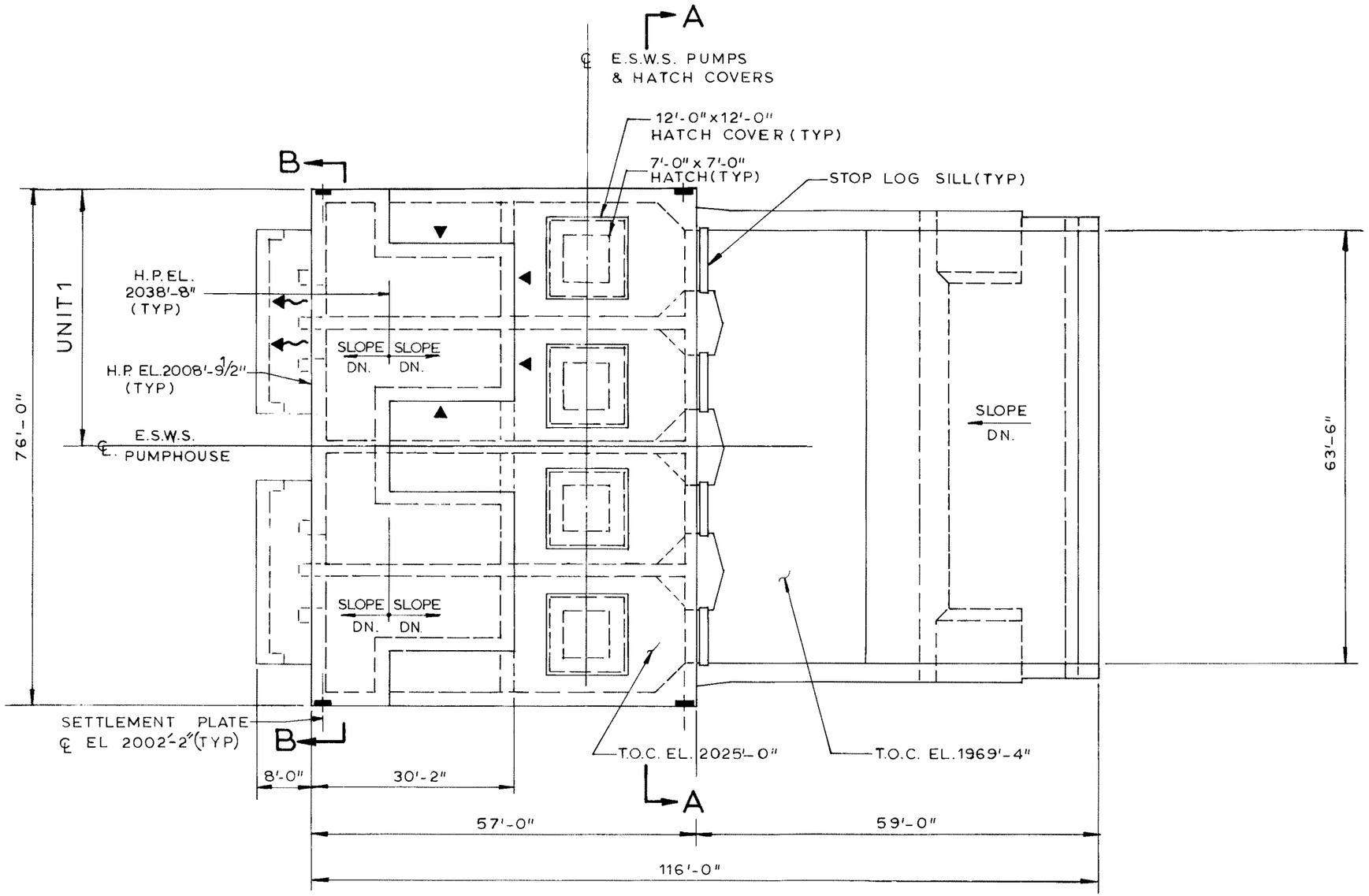

PLAN VIEW— E.S.W.S. PUMPHOUSE

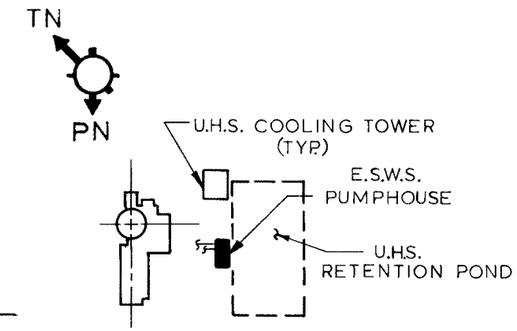

KEY PLAN

NOTE: ROOFS AND HATCHES AT EL 2038'-8", EL 2025'-0" AND EL 2008'-9 1/2" HAVE f'c = 5000 psi MINIMUM AT 90 DAYS. ALL OTHER CONCRETE IS f'c = 4000 psi MINIMUM AT 28 DAYS.

▶ AIR INTAKE

⇝ AIR EXHAUST

Rev. OL-0
6/86

UNION ELECTRIC COMPANY
CALLAWAY PLANT
FINAL SAFETY ANALYSIS REPORT

FIGURE 3.8-1

PLAN-E.S.W.S. PUMPHOUSE

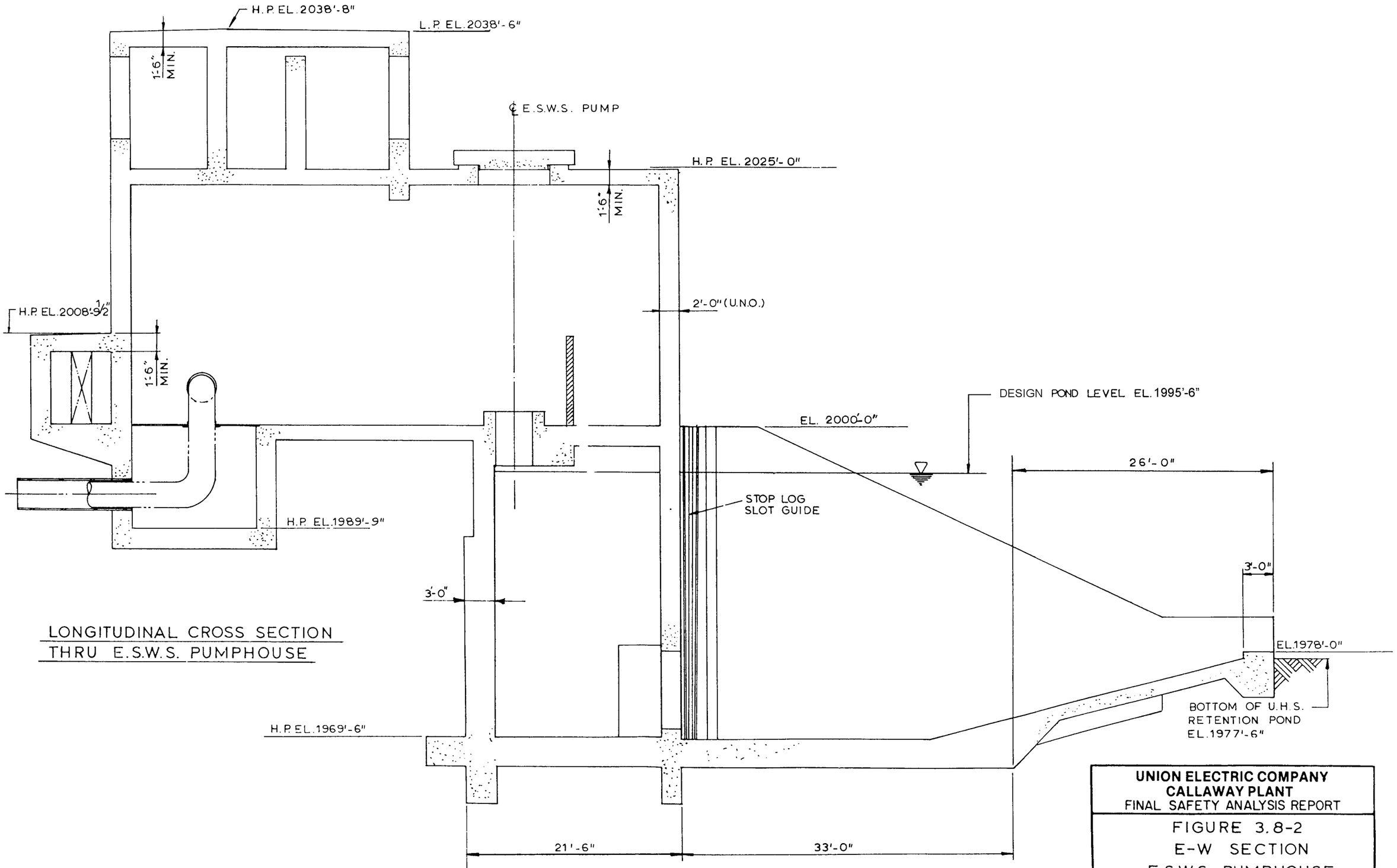

LONGITUDINAL CROSS SECTION THRU E.S.W.S. PUMPHOUSE

UNION ELECTRIC COMPANY
CALLAWAY PLANT
FINAL SAFETY ANALYSIS REPORT

FIGURE 3.8-2
E-W SECTION
E.S.W.S. PUMPHOUSE
REV. 5 9/14

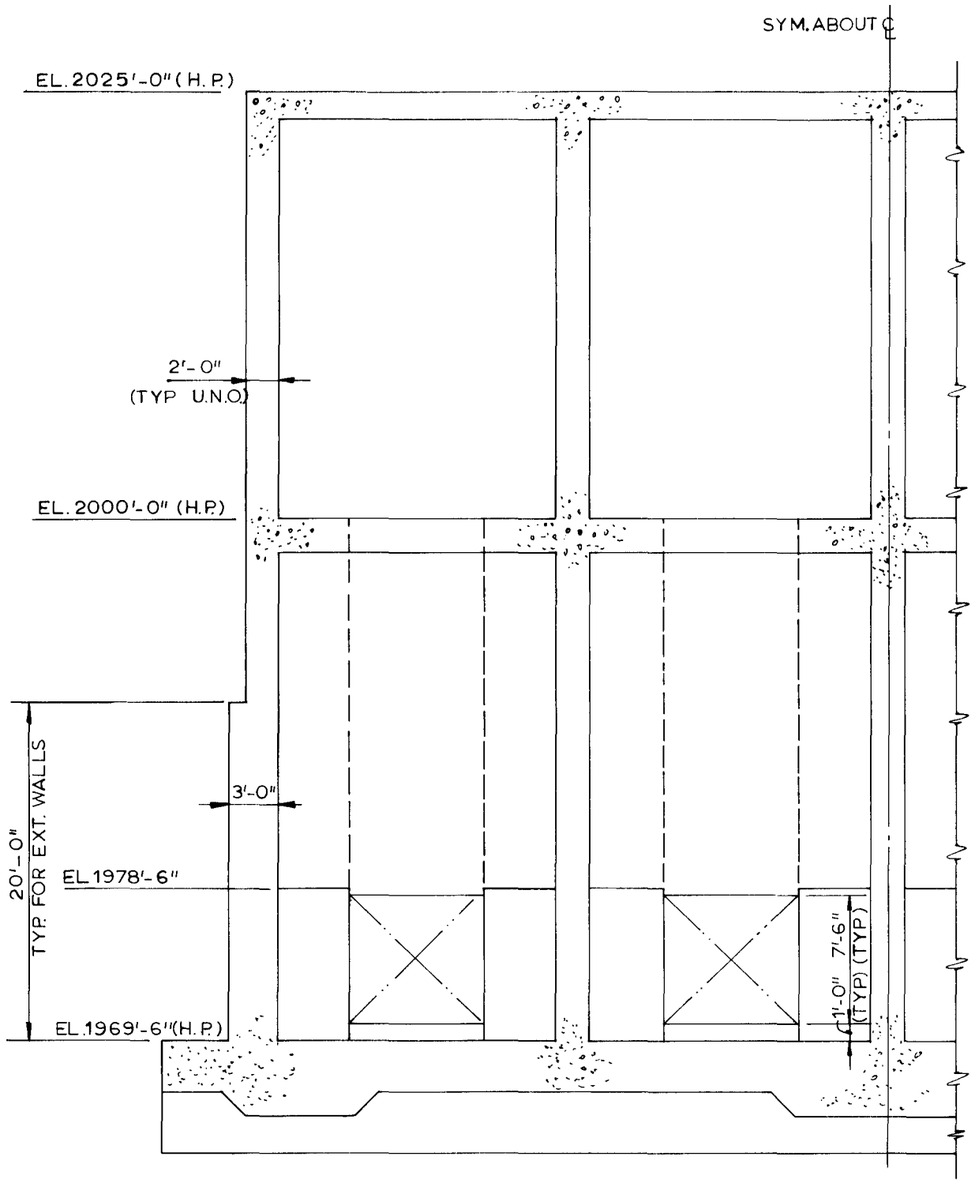

SECTION A-A

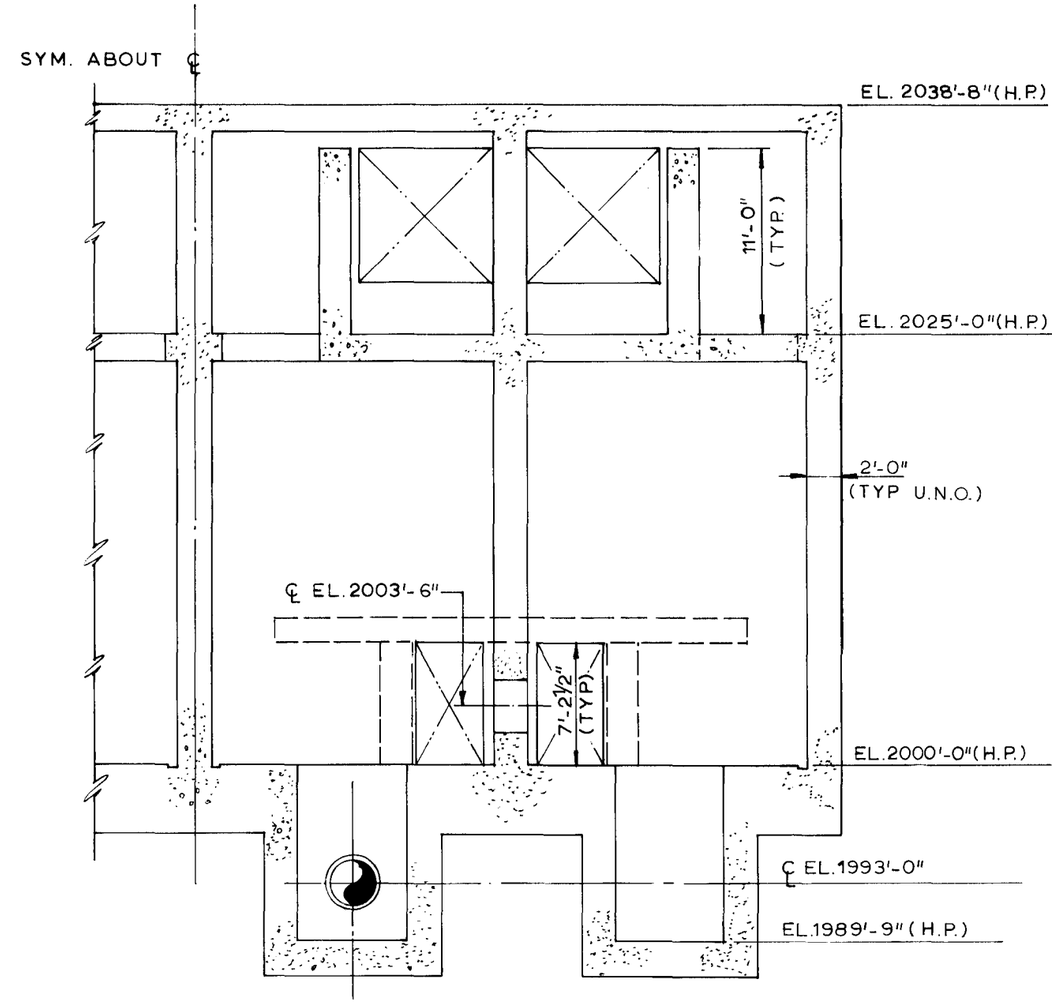

SECTION B-B

Rev. OL-0
6/86

UNION ELECTRIC COMPANY
CALLAWAY PLANT
FINAL SAFETY ANALYSIS REPORT

FIGURE 3.8-3
N-S SECTIONS
E.S.W.S. PUMPHOUSE

Note 1:
The ESWS intake and discharge line between the control building and the ESWS pumphouse and UHS cooling tower shown on this figure has been abandoned in place. The new routing of the ESWS intake and discharge line between the control building and the ESWS pumphouse and UHS cooling tower are shown on Figure 3.8-4, Sheet 2.

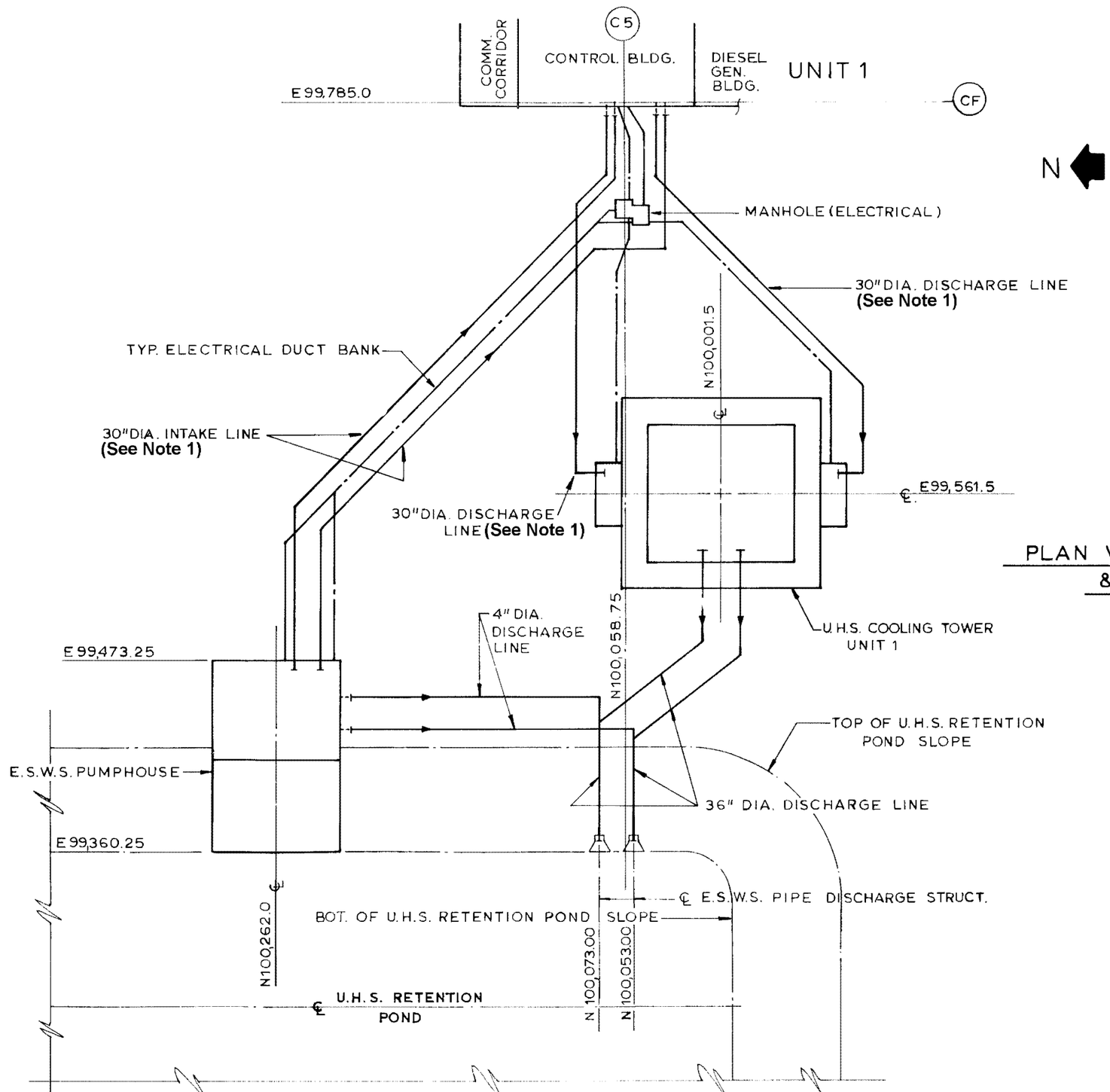

PLAN VIEW – E.S.W.S. UNIT 1 YARD PIPELINES & ELEC. DUCT BANKS

UNION ELECTRIC COMPANY **CALLAWAY PLANT** FINAL SAFETY ANALYSIS REPORT
FIGURE 3.8-4 PLAN UNIT-1 E.S.W.S. PIPES & DUCT BANKS **REV. 1 11/10**

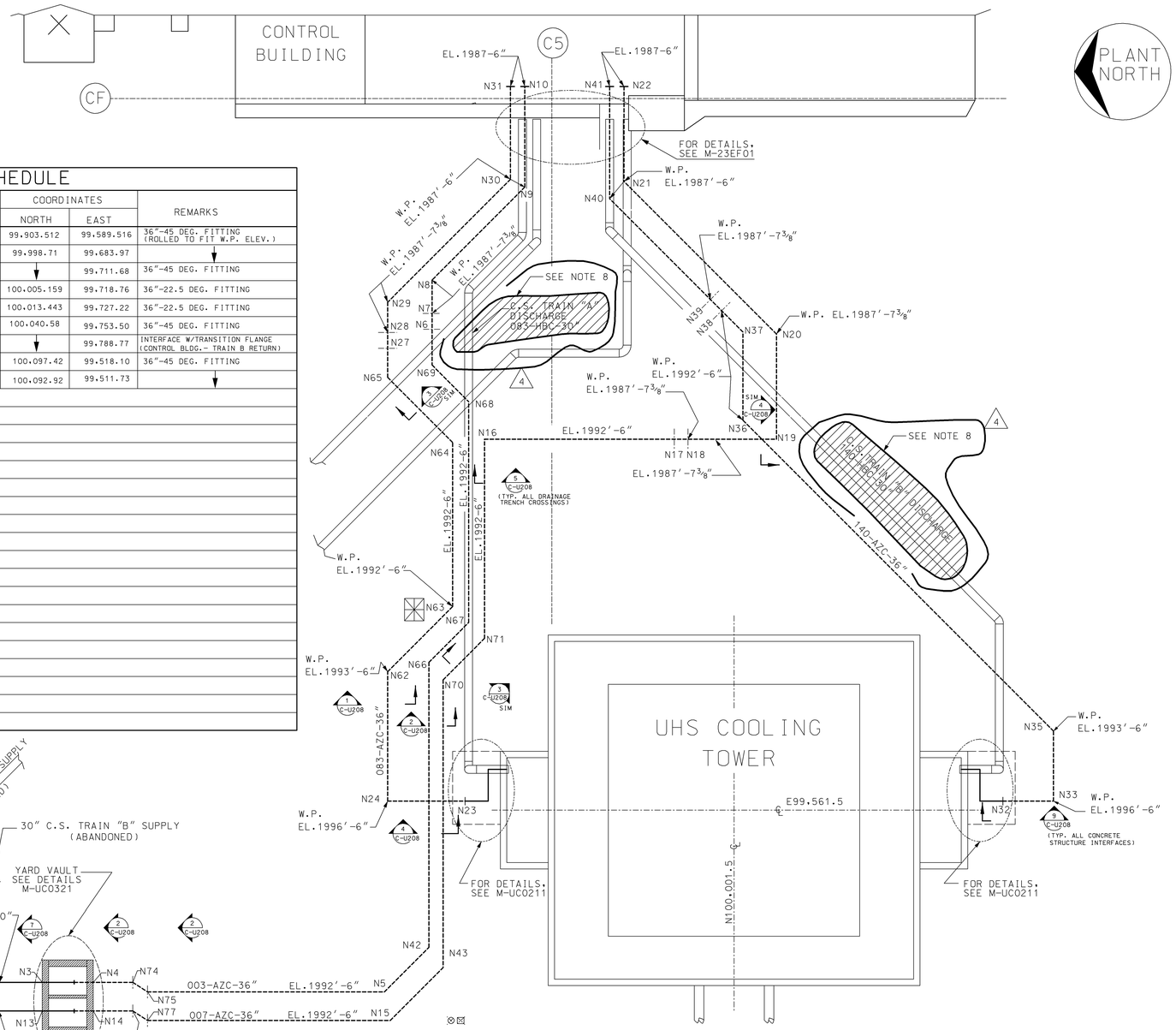

PLAN VIEW

PIPELINE WORK POINT SCHEDULE

WORK POINT NO.	℄ ELEV.	COORDINATES NORTH	COORDINATES EAST	REMARKS
N1	1993'-0"	100,252.75	99,473.25	INTERFACE W/PUMPHOUSE PIPING (TRAIN A SUPPLY)
N2	1996'-0"	↓	99,507.50	30"-90 DEG. S.R. (S.S.) FITTING (ROLLED TO FIT)
N3	↓	100,218.87	↓	30" S.S. PIPE INTERFACE W/YARD VAULT (TRAIN A SUPPLY)
N4	↓	100,202.87	↓	36" HDPE PIPE INTERFACE W/YARD VAULT (TRAIN A SUPPLY)
N5	1992'-6"	100,111.42	99,504.10	36"-45 DEG. FITTING
N6	↓	100,096.42	99,712.50	36"-45 DEG. FITTING
N7	1987'-7 3/8"	↓	99,717.39	↓
N8	↓	↓	99,728.00	36"-45 DEG. FITTING (ROLLED TO FIT W.P. ELEV.)
N9	1987'-6"	100,067.25	99,757.16	↓
N10	↓	↓	99,788.77	INTERFACE W/TRANSITION FLANGE (CONTROL BLDG.- TRAIN A SUPPLY)
N11	1993'-0"	100,234.25	99,473.25	INTERFACE W/PUMPHOUSE PIPING (TRAIN B SUPPLY)
N12	1996'-0"	↓	99,498.50	30"-90 DEG. S.R. (S.S.) FITTING (ROLLED TO FIT)
N13	↓	100,218.87	↓	30" S.S. PIPE INTERFACE W/YARD VAULT (TRAIN B SUPPLY)
N14	↓	100,202.87	↓	36" HDPE PIPE INTERFACE W/YARD VAULT (TRAIN B SUPPLY)
N15	1992'-6"	100,109.55	99,495.10	36"-45 DEG. FITTING
N16	↓	100,079.92	99,678.00	36"-90 DEG. FITTING
N17	↓	100,015.07	99,678.80	36"-22.5 DEG. FITTING
N18	1987'-7 3/8"	100,003.045	99,679.05	↓
N19	↓	99,988.20	99,678.00	36"-90 DEG. FITTING
N20	↓	↓	99,711.10	36"-45 DEG. FITTING (ROLLED TO FIT W.P. ELEV.)
N21	1987'-6"	100,036.08	99,759.15	↓
N22	↓	↓	99,788.77	INTERFACE W/TRANSITION FLANGE (CONTROL BLDG.- TRAIN B SUPPLY)
N23	1996'-6"	100,086.27	99,564.31	INTERFACE W/TRANSITION FLANGE (COOLING TOWER- TRAIN A)
N24	↓	100,110.37	↓	36"-90 DEG. FITTING (ROLLED TO FIT W.P. ELEV.)
N27	1992'-6"	100,110.37	99,706.30	36"-45 DEG. FITTING
N28	1987'-7 3/8"	↓	99,711.19	↓
N29	↓	↓	99,721.00	36"-45 DEG. FITTING (ROLLED TO FIT W.P. ELEV.)
N30	1987'-6"	100,071.75	99,759.61	↓
N31	↓	↓	99,788.77	INTERFACE W/TRANSITION FLANGE (CONTROL BLDG.- TRAIN A RETURN)
N32	1996'-6"	99,917.500	99,564.31	INTERFACE W/TRANSITION FLANGE (COOLING TOWER- TRAIN B)
N33	↓	99,903.921	99,564.321	36"-90 DEG. FITTING (ROLLED ELBOW)

PIPELINE WORK POINT SCHEDULE (CONT'D)

WORK POINT NO.	℄ ELEV.	COORDINATES NORTH	COORDINATES EAST	REMARKS
N35	1993'-6"	99,903.512	99,589.516	36"-45 DEG. FITTING (ROLLED TO FIT W.P. ELEV.)
N36	1992'-6"	99,998.71	99,683.97	↓
N37	↓	↓	99,711.68	36"-45 DEG. FITTING
N38	↓	100,005.159	99,718.76	36"-22.5 DEG. FITTING
N39	1987'-7 3/8"	100,013.443	99,727.22	36"-22.5 DEG. FITTING
N40	1987'-6"	100,040.58	99,753.50	36"-45 DEG. FITTING
N41	↓	↓	99,788.77	INTERFACE W/TRANSITION FLANGE (CONTROL BLDG.- TRAIN B RETURN)
N42	1992'-6"	100,097.42	99,518.10	36"-45 DEG. FITTING
N43	↓	100,092.92	99,511.73	↓

Figure 3.8-5 has been deleted

Figure 3.8-6 has been deleted

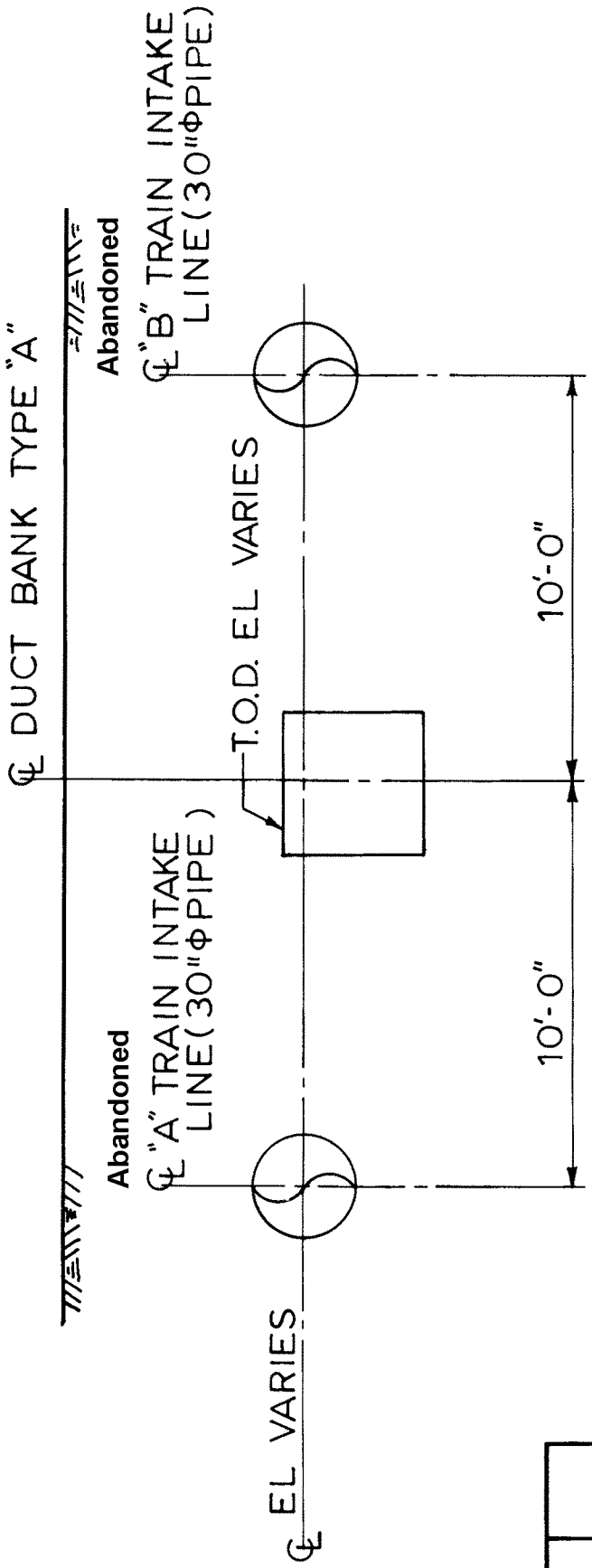

UNION ELECTRIC COMPANY
CALLAWAY PLANT
FINAL SAFETY ANALYSIS REPORT

FIGURE 3.8-7
SECTION THROUGH
E.S.W.S. PIPES & DUCT BANKS
REV. 1 11/10

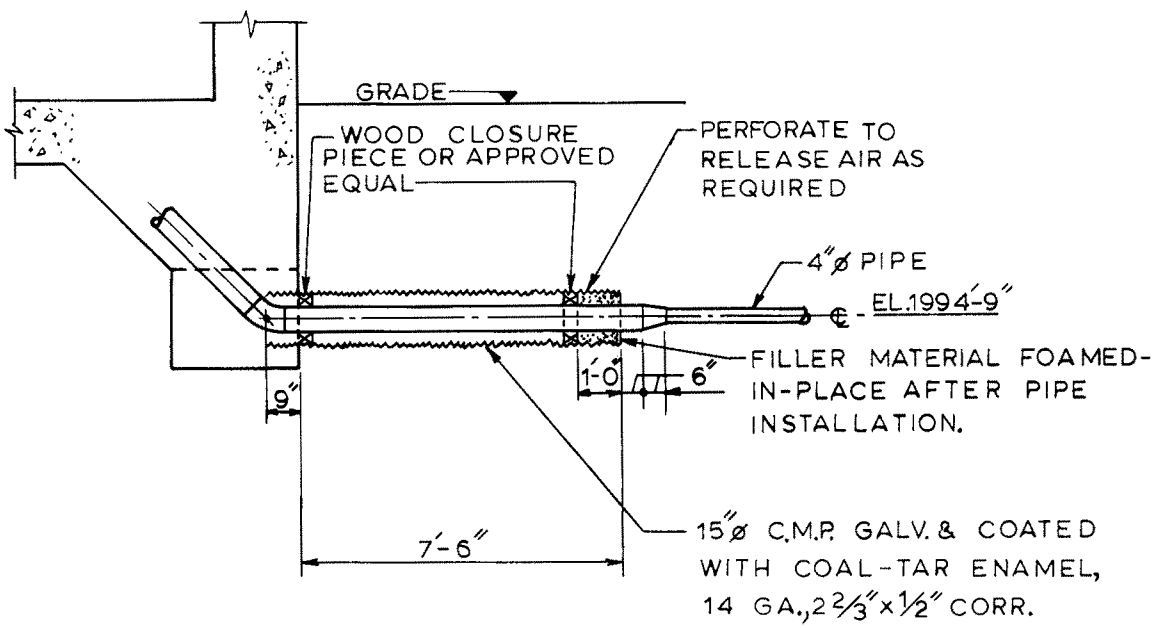

4"ø DISCHARGE PIPE PENETRATION - E.S.W.S. PUMPHOUSE

Rev. OL-0
6/86

UNION ELECTRIC COMPANY
CALLAWAY PLANT
FINAL SAFETY ANALYSIS REPORT

FIGURE 3.8-8
4" & 30" DIA. PIPE PENATRATION DETAILS SHEET-1

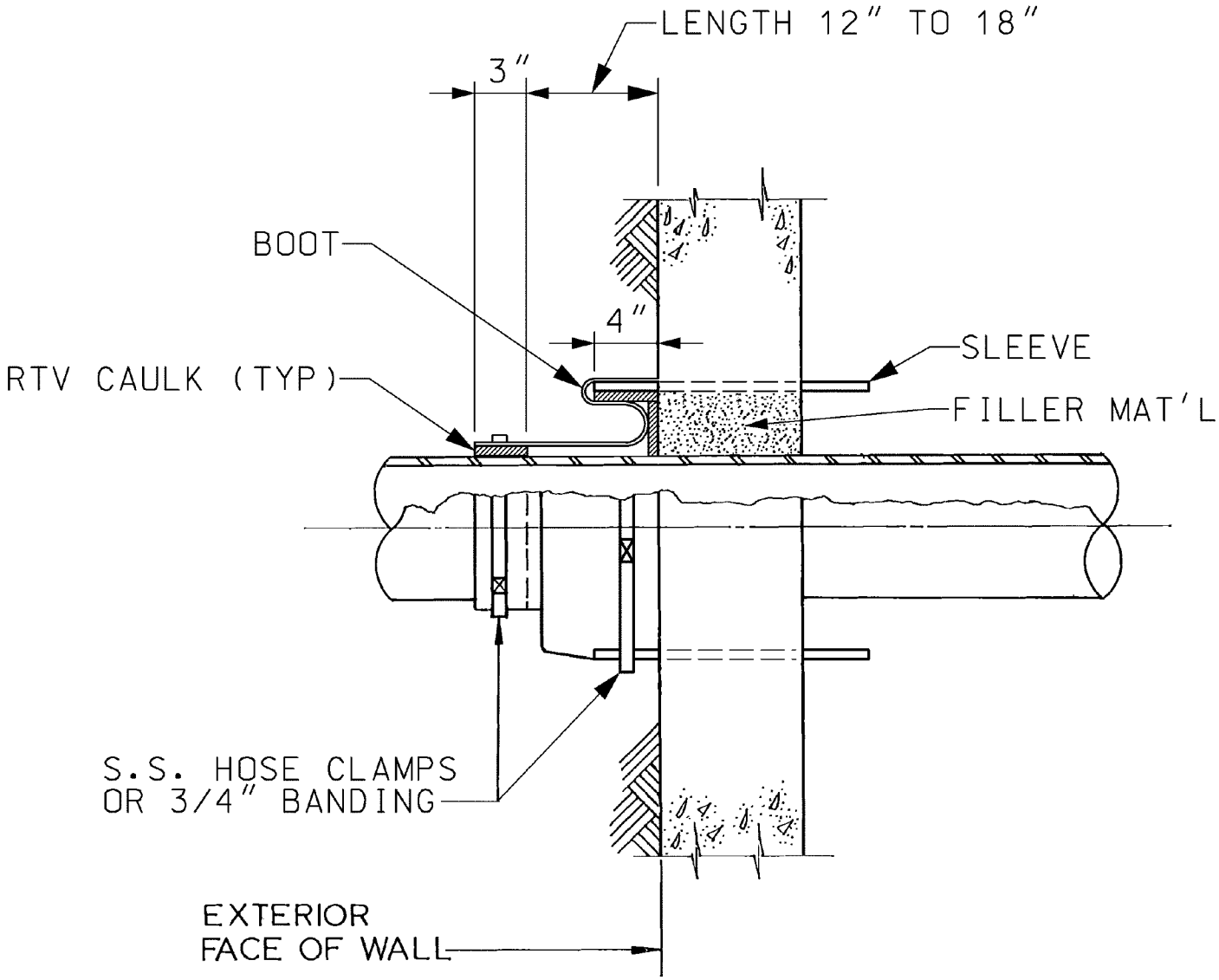

BOOT PENETRATION SEALS

NOTES:

1. **Fill sleeve with filler material (RTV foam) with in approximately 2 to 3 inches of exterior end & 1 to 2 inches from interior end.**

2. **Install approximately 1/2" of RTV caulk on sleeve & filler material interface as shown.**

UNION ELECTRIC COMPANY **CALLAWAY PLANT** FINAL SAFETY ANALYSIS REPORT
FIGURE 3.8-8 4" & 30" DIA. PIPE PENETRATION DETAILS SHEET-2 **REV. 1 11/10**

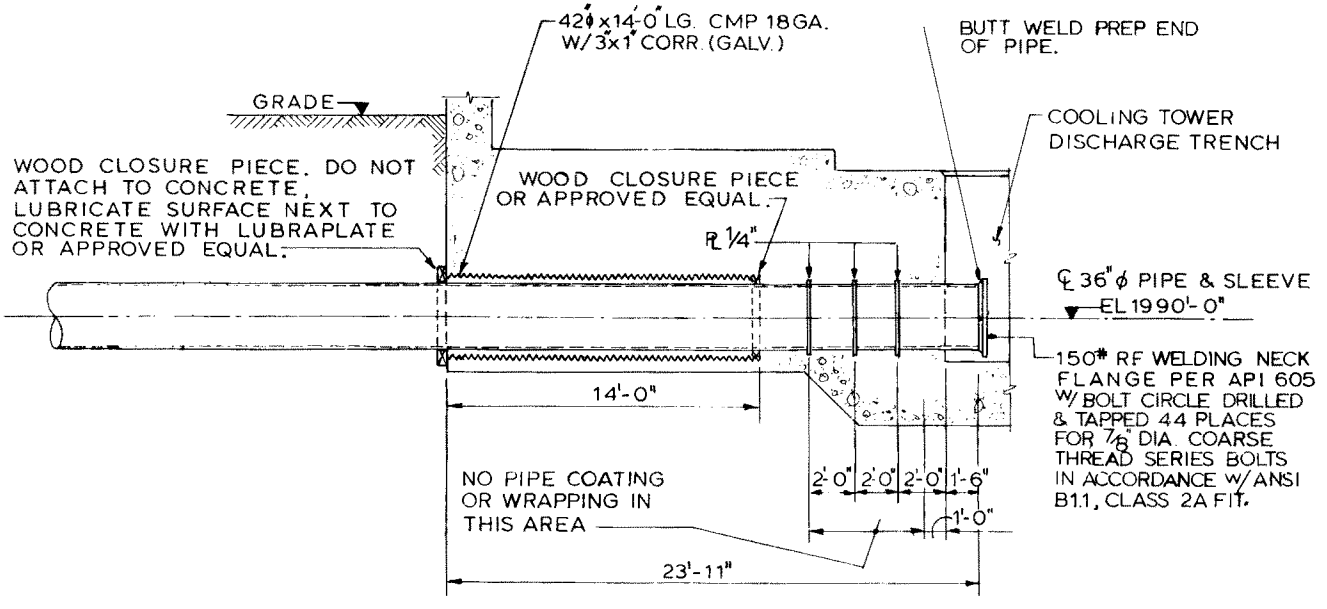

36"ϕ DISCHARGE PIPE PENETRATION - U.H.S. COOLING TOWER

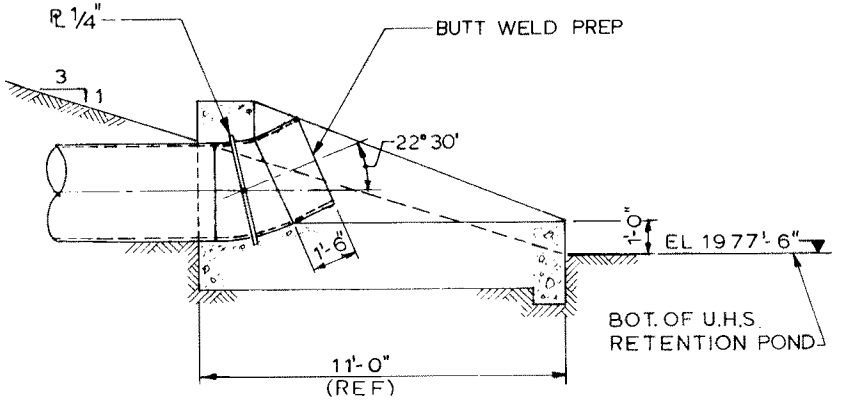

36"ϕ DISCHARGE PIPE PENETRATION - U.H.S. DISCHARGE STRUCTUR

UNION ELECTRIC COMPANY
CALLAWAY PLANT
FINAL SAFETY ANALYSIS REPORT

FIGURE 3.8-9

36" DIA PIPE PENETRATION DETAILS

Rev. OL-0
6/86

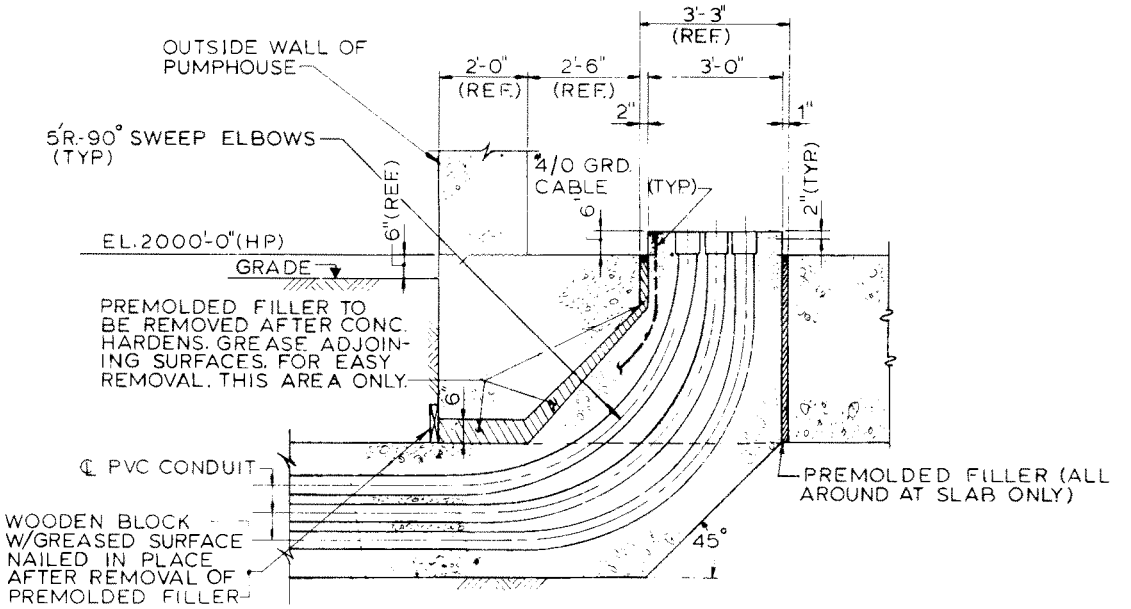

DUCT BANK ENTRANCE DETAILS AT E.S.W.S. PUMPHOUSE
SCALE ½" = 1'-0"

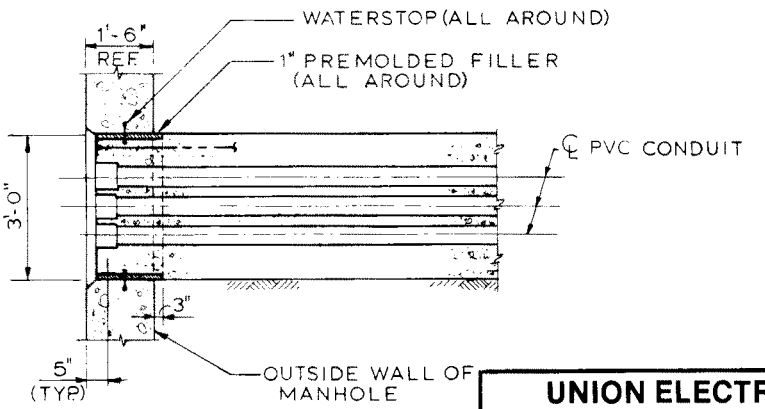

DUCT BANK ENTRANCE DETAIL AT
MANHOLES & U.H.S. COOLING TOWER(SIM.)

Rev. OL-0
6/86

UNION ELECTRIC COMPANY
CALLAWAY PLANT
FINAL SAFETY ANALYSIS REPORT

FIGURE 3.8-10
DUCT BANK ENTRANCE
DETAILS

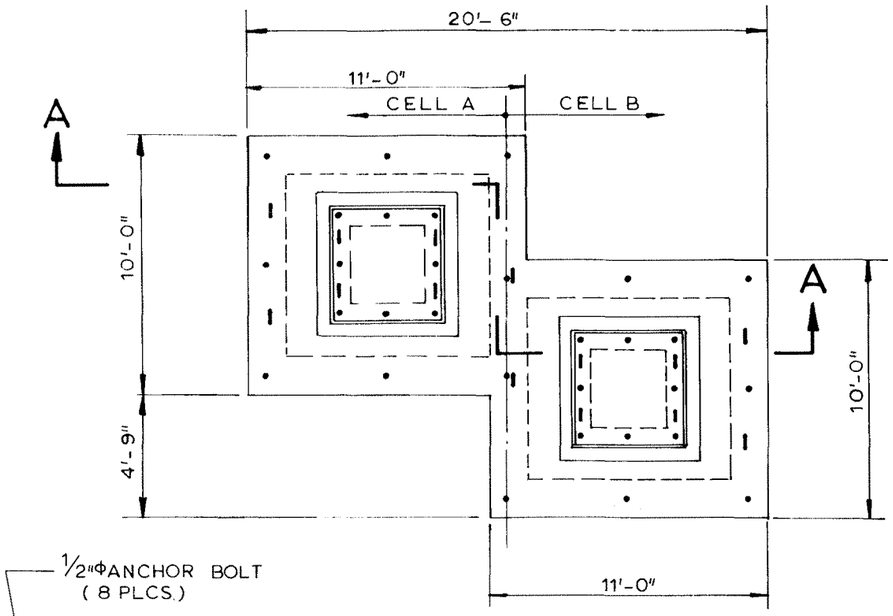

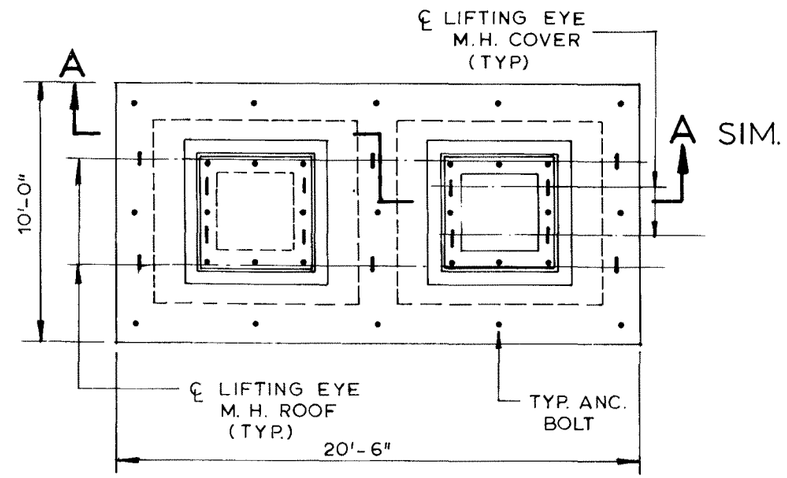

TYP. ROOF PLANS - ELEC. MANHOLES

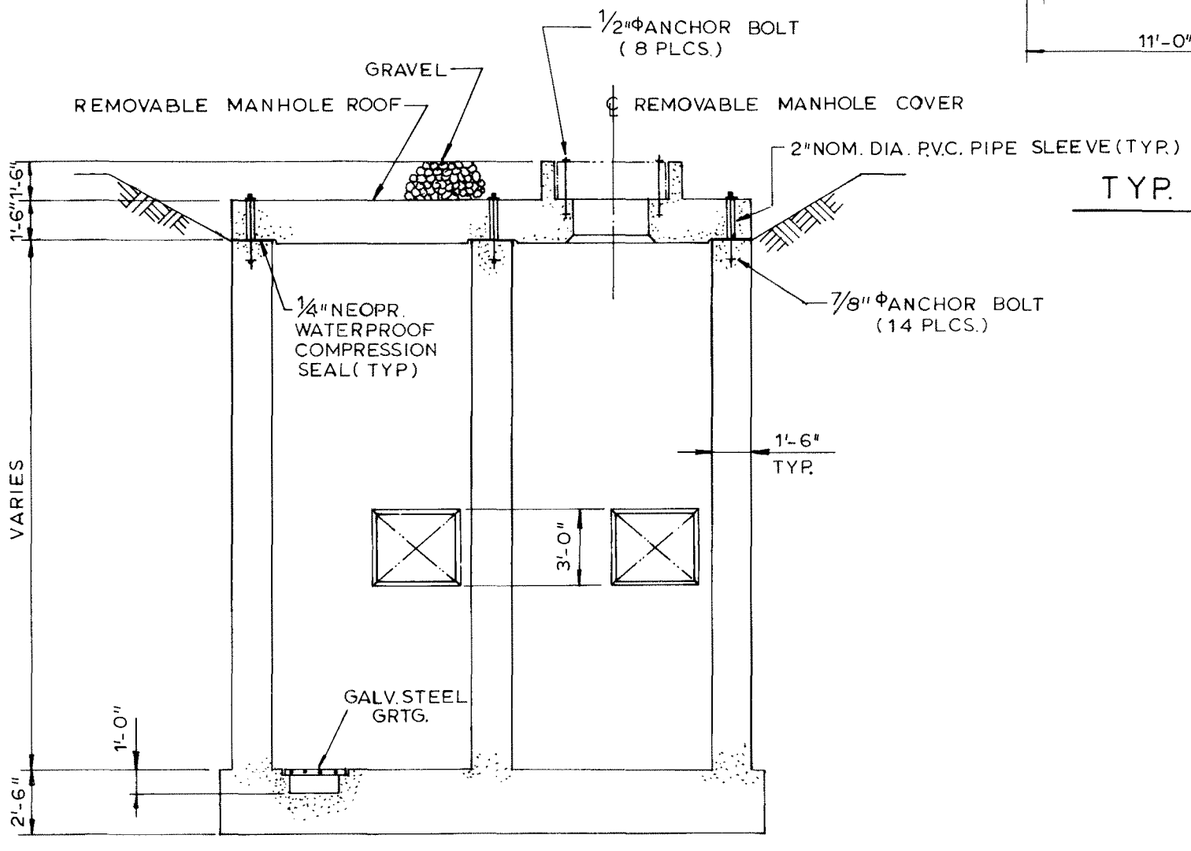

SECTION A - A

NOTE: FOR MANHOLE ROOF AND COVER f'c = 5000 psi MINIMUM AT 90 DAYS

Rev. OL-0
6/86

UNION ELECTRIC COMPANY
CALLAWAY PLANT
FINAL SAFETY ANALYSIS REPORT

FIGURE 3.8-11

E.S.W.S. MANHOLES

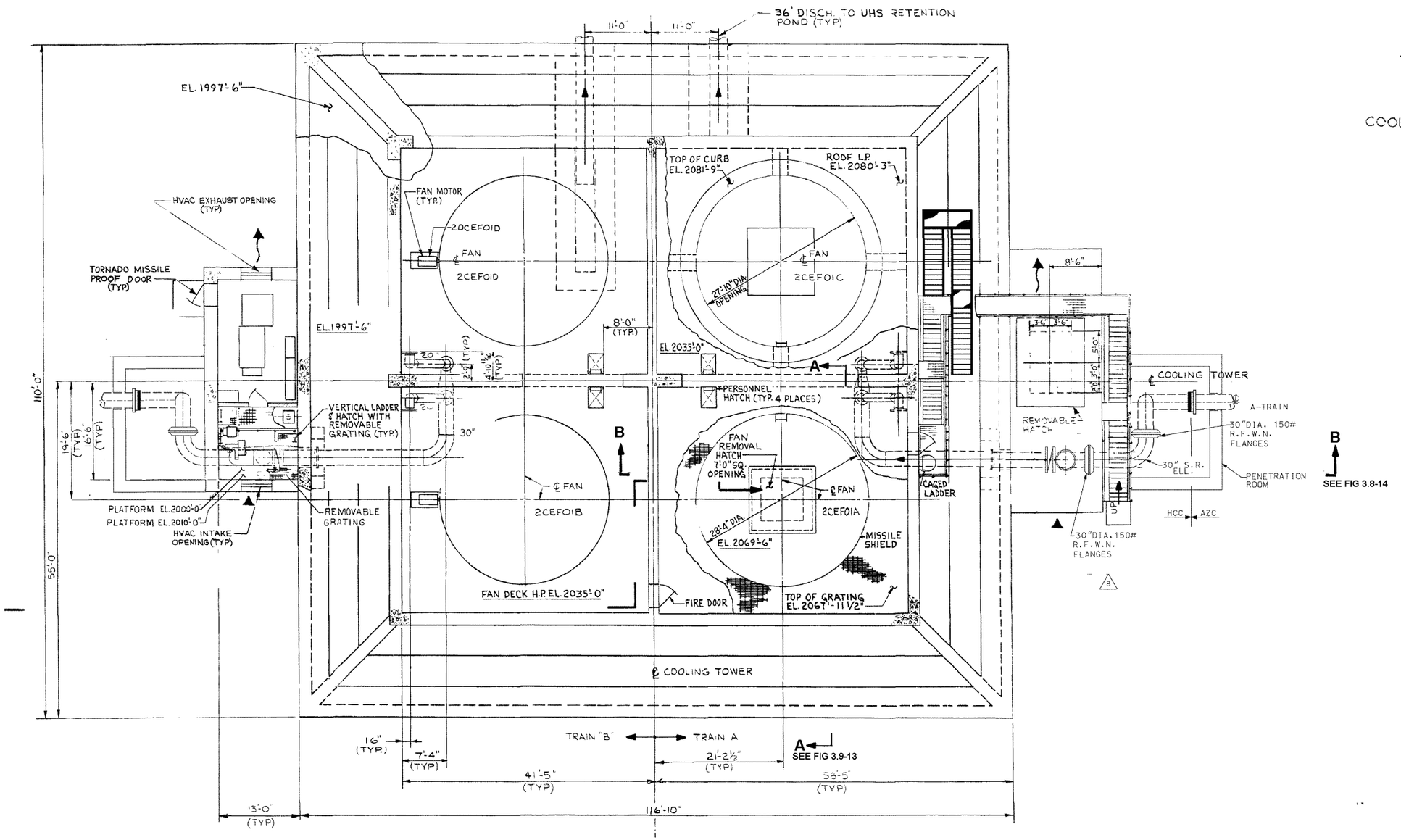

PLAN VIEW – U.H.S. COOLING TOWER

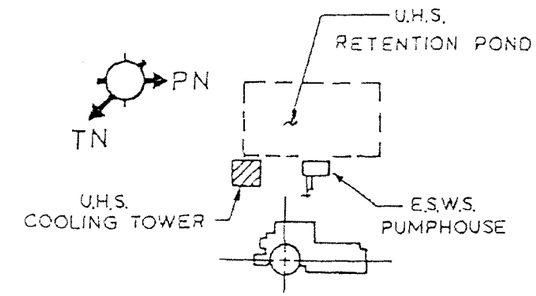

KEY PLAN

▶ AIR INTAKE

⇝ AIR EXHAUST

UNION ELECTRIC COMPANY CALLAWAY PLANT FINAL SAFETY ANALYSIS REPORT
FIGURE 3.8-12 PLAN - U.H.S. COOLING TOWER **REV. 12 11/10**

UNION ELECTRIC COMPANY
CALLAWAY PLANT
FINAL SAFETY ANALYSIS REPORT

FIGURE 3.8-13
E-W SECTION
U.H.S. COOLING TOWER SHT. 1

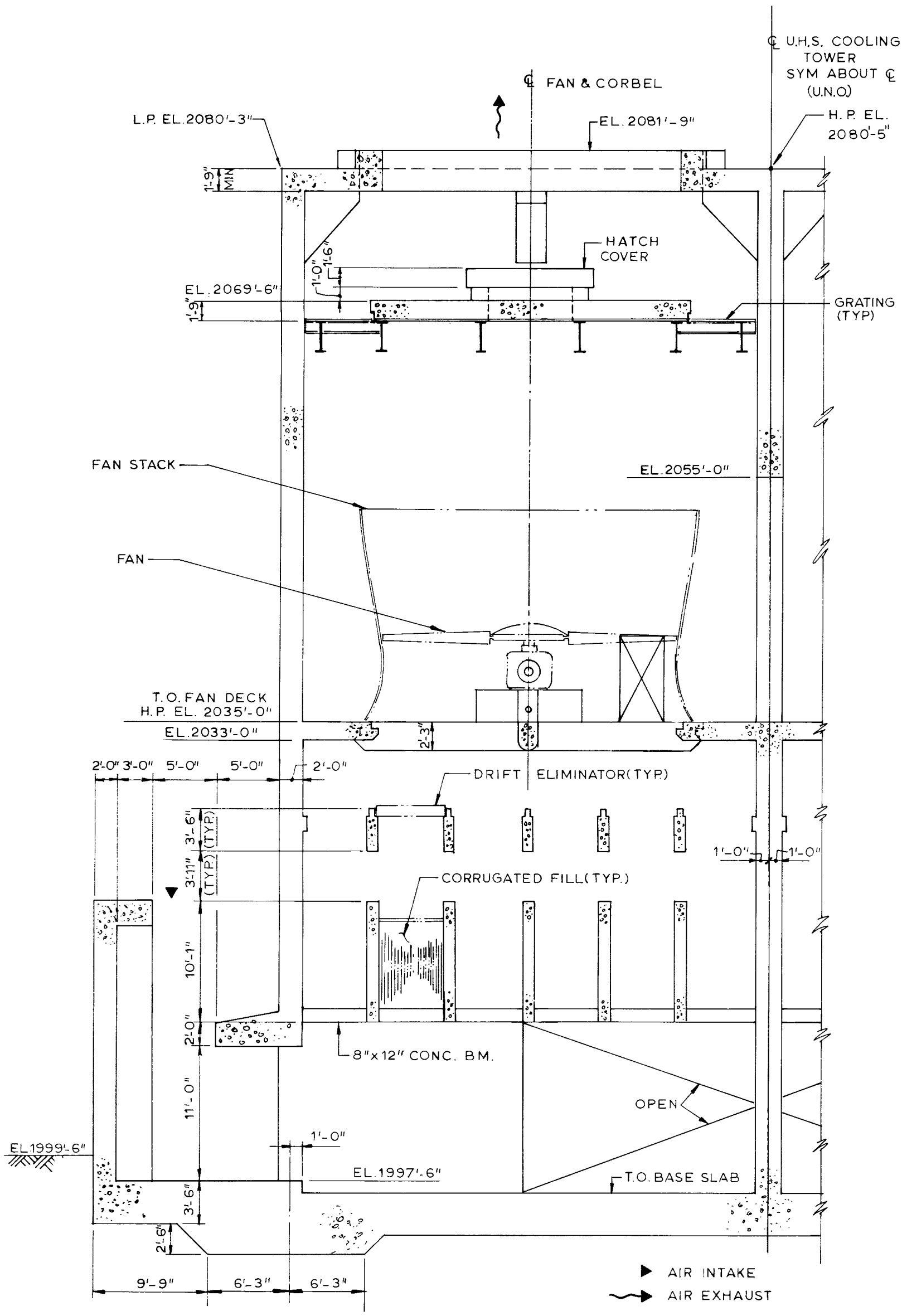

SECTION A-A

SEE FIG. 3.8-12

NOTE: SLAB AND HATCH COVER AT EL 2069'-6" AND BASE SLAB HAVE f'c = 5000 psi MINIMUM AT 90 DAYS. ALL OTHER CONCRETE HAS f'c = 4000 psi MINIMUM AT 28 DAYS.

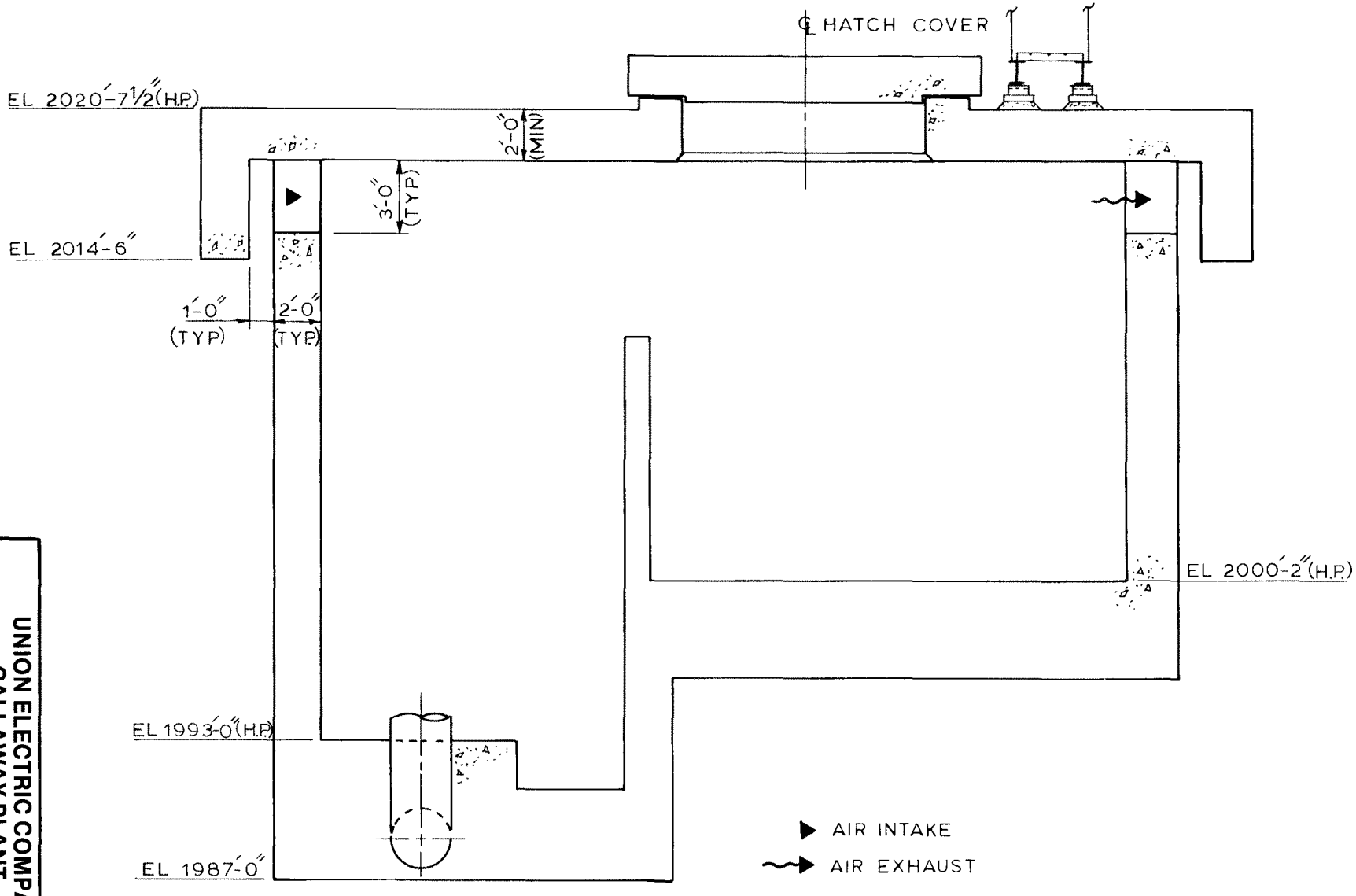

SECTION C-C

UNION ELECTRIC COMPANY
CALLAWAY PLANT
FINAL SAFETY ANALYSIS REPORT

FIGURE 3.8-13
E-W SECTION
U.H.S. COOLING TOWER SHT. 2

Rev. OL-0
6/86

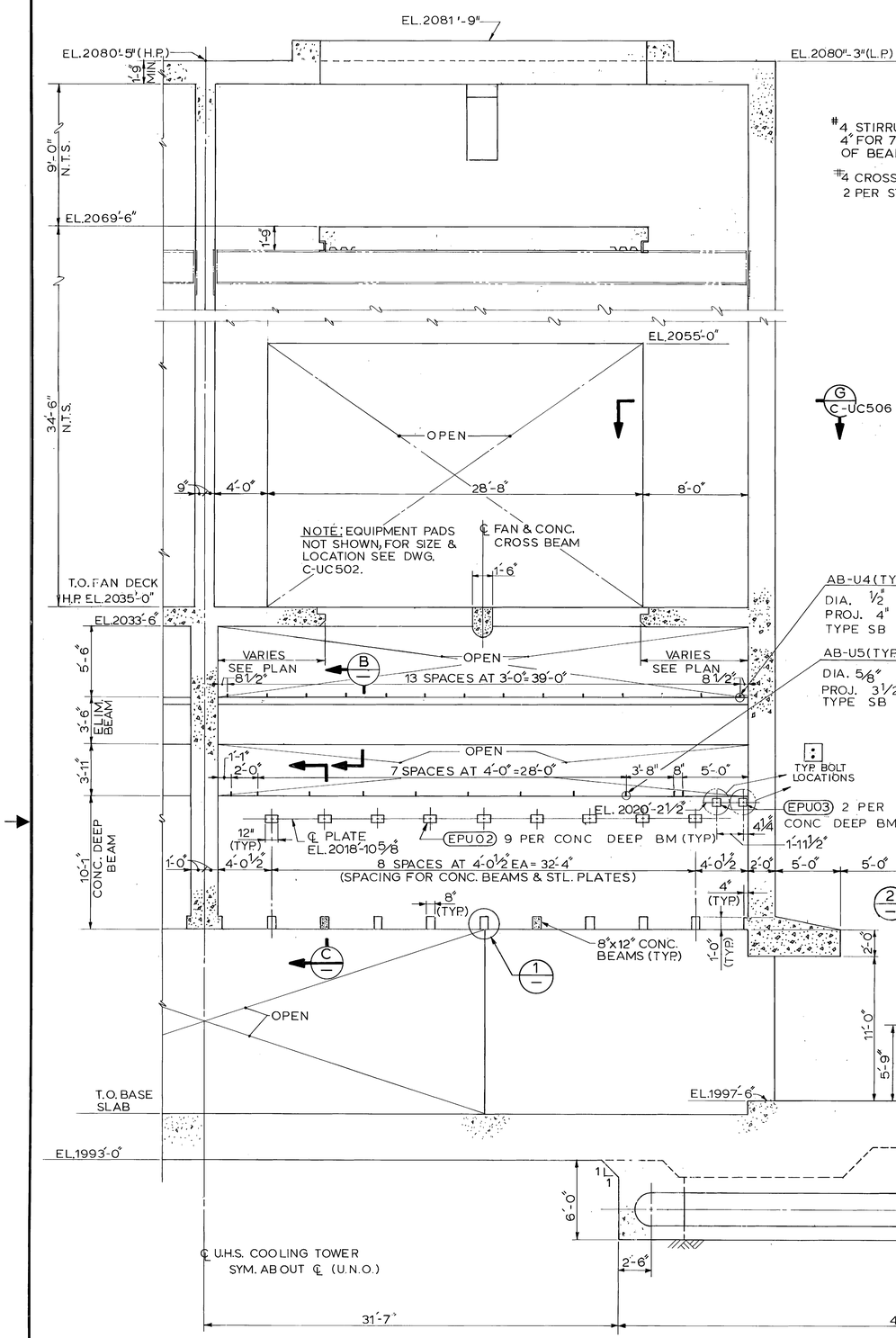

SECTION A
SCALE 1/4"=1'-0" C-UC503
SEE DWG C-UC501
C-UC502
C-UC512

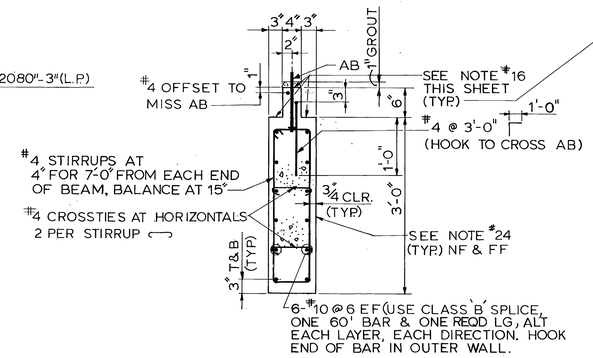

TYP SECTION THRU ELIMINATOR BEAM

SECTION B
SCALE 1"=1'-0"

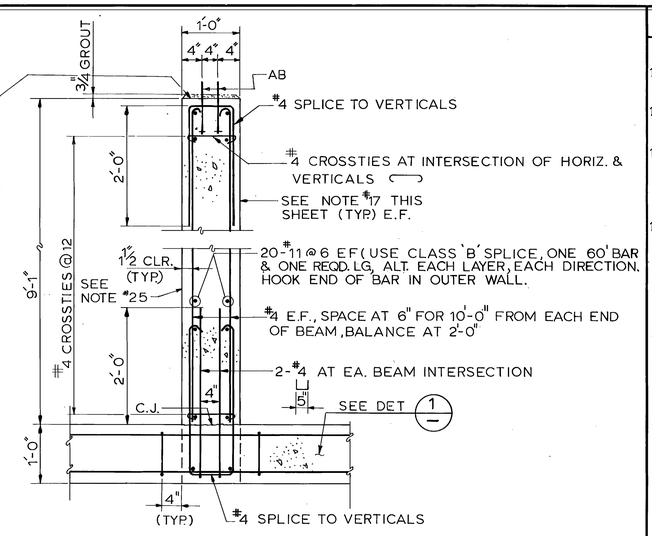

SECTION C
SCALE 1"=1'-0"

NOTE: SEE PARTIAL PLAN BELOW FOR EMBEDDED PLATES IN CONC. DEEP BEAMS.

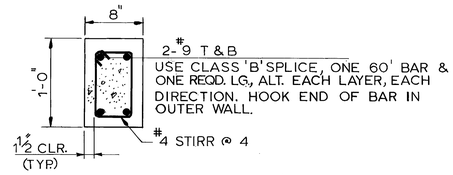

DETAIL 1
SCALE 1 1/2"=1'-0"

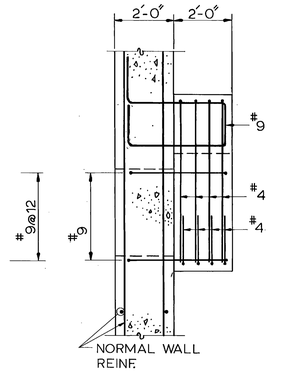

SECTION D
SCALE 1/2"=1'-0"

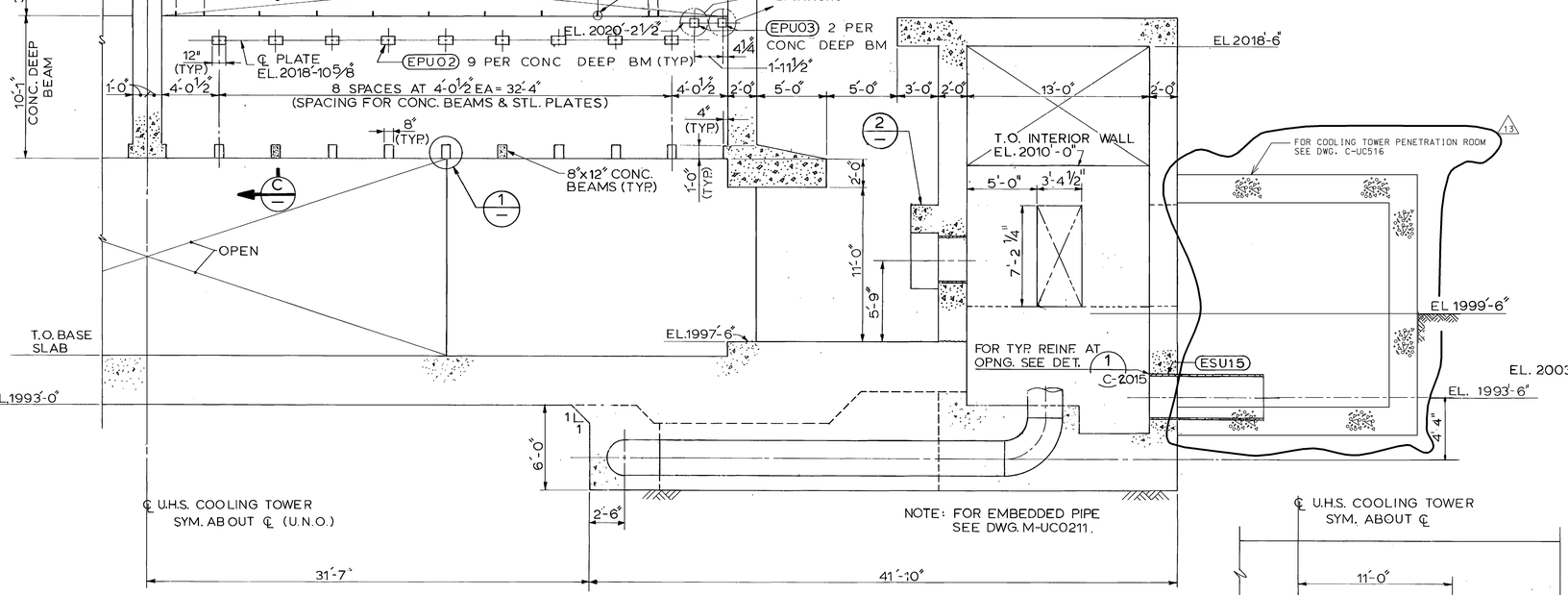

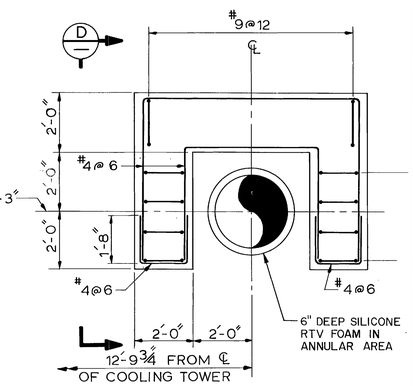

CONCRETE COLLAR AT PIPE

DETAIL 2
SCALE 1/2"=1'-0"

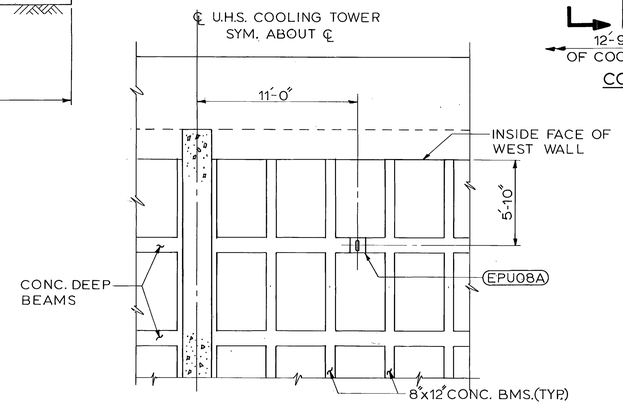

REFLECTED PARTIAL PLAN UNDERSIDE OF CONCRETE BEAMS AT EL. 2010'-6"
SCALE: 1/4"=1'-0"

NOTES

CONTINUED FROM DWG. C-UC502.

16. THESE SURFACES SHALL BE FINISHED SMOOTH & BE IN PLANE TO ± 1/4".
17. THESE SURFACES SHALL BE FLAT & IN VERT. PLANE TO ± 3/8".
18. HOR. REINF. LAP SPLICES AT VERT. C.J. SHALL BE CLASS "C" AS DEFINED IN A.C.I. 318-71. (PER TABLE VIII, CRSI REINF. BAR SPLICES) U.N.O.
19. HOR. REINF. LAP SPLICES SHALL BE STAGGERED WHERE POSSIBLE. SPLICES (U.N.O.) WHEN STAGGERED SHALL BE CLASS "B" AS DEFINED IN A.C.I. 318-71. (PER TABLE VIII, CRSI REINF. BAR SPLICES)
20. CABLE SUPPORT INSERTS TO BE FIELD CUT AT INTERFERENCES WITH EMBED PLATES.
21. ALL DOWELS (REINFORCING STEEL) EXTENDING FROM THE UNIT 2 BASE SLAB SHALL BE GALV. PER ASTM A123-73 (U.N.O.)
22. CONCRETE FINISHING, AFTER REMOVAL OF FORMS, SHALL BE IN ACCORDANCE WITH SPECIFICATION C103 AS FOLLOWS:
    INTERIOR WALLS & CEILINGS AS PER PARAGRAPH 14.1.1
    INTERIOR FLOORS AS PER PARAGRAPH 13.1.3
    EXTERIOR WALLS AS PER PARAGRAPH 14.1.1
    EXTERIOR FLAT SLABS AS PER PARAGRAPH 13.1.2
23. DOWELS 16 FT. OR LONGER EXTENDING FROM THE UNIT-1 BASE SLAB MAY BE CUT & MECHANICALLY SPLICED AT THE CONTRACTOR'S OPTION WITH OWNER'S APPROVAL PROVIDING THE FOLLOWING REQUIREMENTS ARE MET:
    a. SPEC. C-115 (Q)
    b. SPEC. C-112 (Q), ESPECIALLY SECT. 8.4
    c. SPLICES ARE STAGGERED AT LEAST ONE (1) FOOT FROM SPLICES ON ADJACENT REINF. BARS.
    c. CENTERLINES OF SPLICES ARE LOCATED NO CLOSER THAN THREE (3) FEET FROM THE CONCR. FACE.
24. CONCRETE CLEAR COVER AT ELIMINATOR BEAMS SHALL HAVE A TOLERANCE OF MINUS 0" PLUS 1/2"
25. DOWELS EXTENDING FROM UNIT 2 BASE SLAB MAY BE PAINTED WITH "DIMETCOTE 6" IN LIEU OF GALVANIZING. PRIOR TO PLACING CONCRETE AROUND THE PAINTED PORTION OF REBAR, SANDBLASTING SHALL BE USED TO REMOVE ALL PAINT

FOR CONTINUATION SEE DWG. C-UC504.

REFERENCE DRAWINGS

CONTINUED FROM DWG. C-UC502

M-WCO211	U.H.S. COOLING TOWER PIPING PLAN & SECTIONS
C-2012	CIVIL STRUCTURAL STANDARDS
C-2020	
C-2033	
C 2035	CIVIL STRUCTURAL STANDARDS
C-U001	ANCHOR BOLT DETS.
C-U002	EMBEDDED FRAME DETS.
C-U003	EMBEDDED SLEEVE DETS.
C-U004	EMBEDDED PLATE DETS.
C-U005	MISC. EMBEDS DETS.

MATERIAL RESPONSIBILITY

CONTINUED FROM DWG. C-UC502.

14. FURNISHING OF HANDRAILS & TOE PLATES UNDER SPEC. C-131.
15. FURNISHING OF REINFORCING MECHANICAL SPLICES UNDER SPEC. C-114.
16. ANCHOR SLEEVES HIGH DENSITY POLY-ETHYLENE PLASTIC AS MANUFACTURED BY WILSON PLASTIC SLEEVE INC., OR APPROVED: EQUAL SHALL BE PROCURED BY OWNER.

FOR CONTINUATION SEE DWG. C-UC504.

NO.	DATE	REVISIONS	BY	CHK	DES SUPV	ENGR	PROJ ENGR	APPR
13	021010	INCORP. MP 07-0066, FCN-24.	MAL	TJC	N/A			TWS
12	10/6/92	INCORP. RFR-10059	MAL					
11	5/14/92	REFLECTS TURNOVER TO U.E. INCORP. RFR-09867A.	JK		N/A			

SCALE NOTED | DATE 10/1/86 | DESIGNED TJ | DRAWN RS | CHIEF ENGR

BECHTEL
GAITHERSBURG, MARYLAND

SNUPPS

U.H.S. COOLING TOWER
CONCRETE NEAT LINE & REINFORCING
SECTIONS & DETAILS - SHT 1

AS-BUILT

UTILITY DRAWING NO.	REV

JOB NO.	BECHTEL DRAWING NO.	REV
10884	C-UC503 (Q) (UNO)	13

DRAWING APPLICABLE TO UNITS

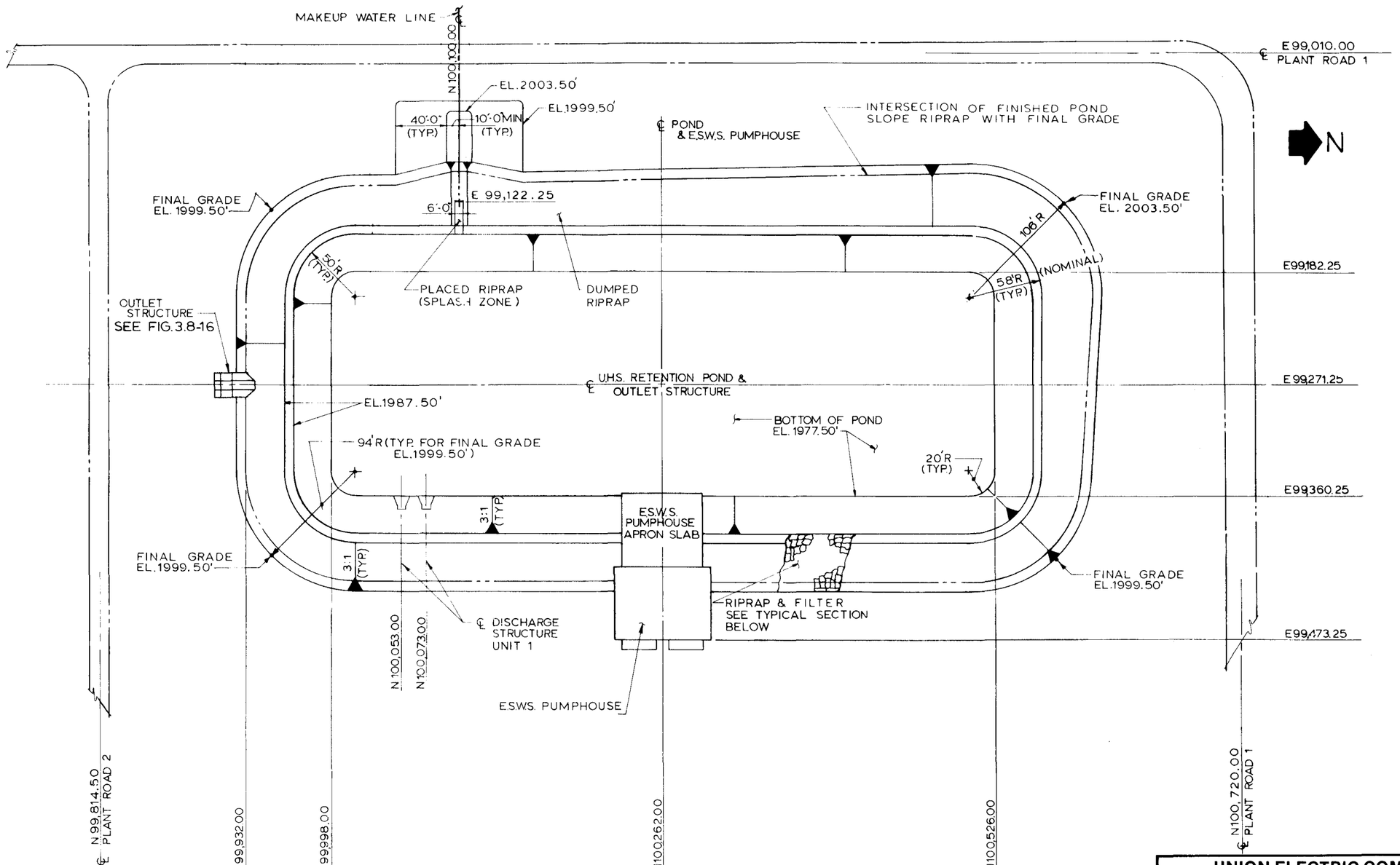

LOCATION PLAN
SCALE: 1"=40'-0"

Rev. OL-0
6/86

UNION ELECTRIC COMPANY
CALLAWAY PLANT
FINAL SAFETY ANALYSIS REPORT

FIGURE 3.8-15
PLAN
U.H.S. RETENTION POND

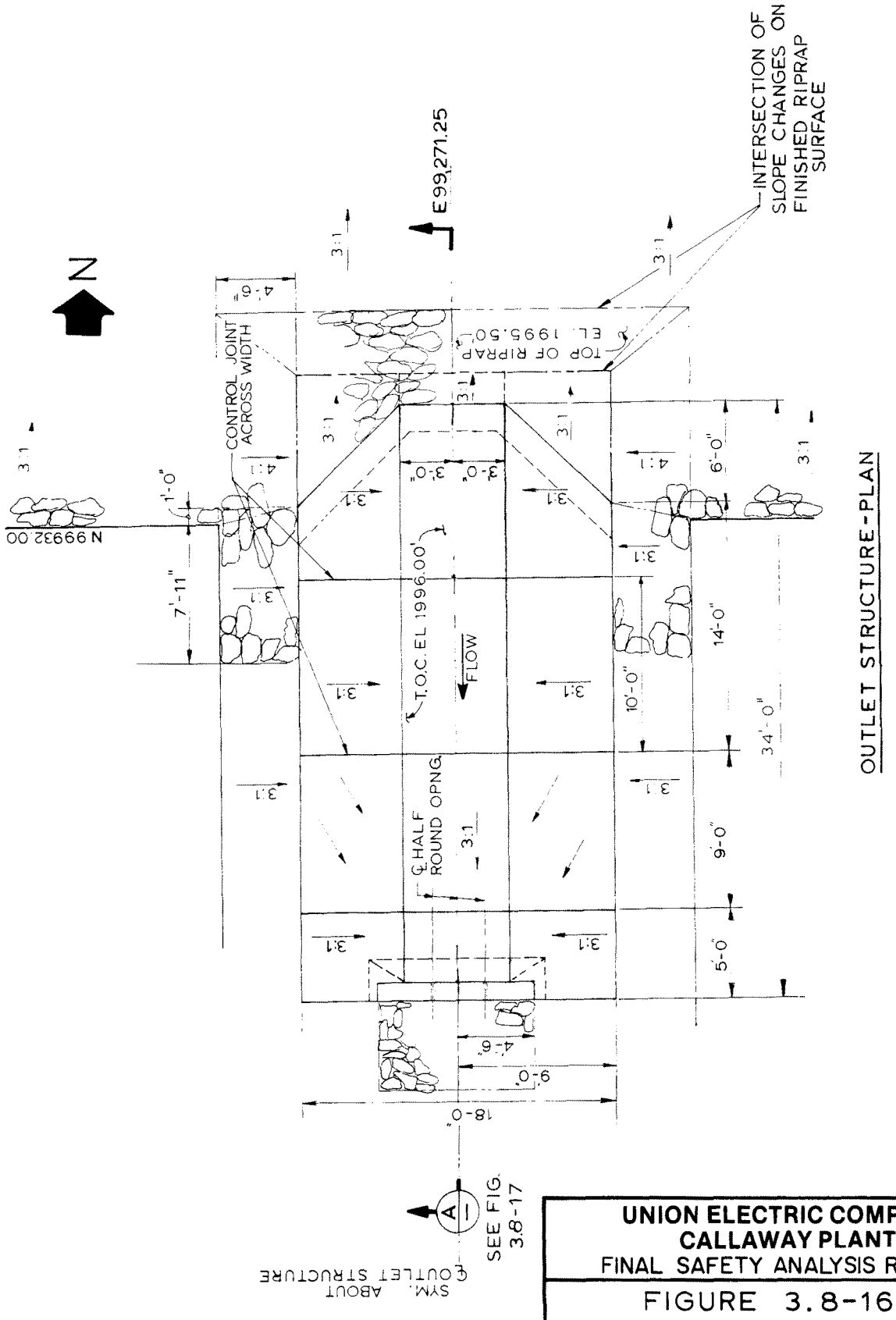

Rev. OL-0
6/86

UNION ELECTRIC COMPANY
CALLAWAY PLANT
FINAL SAFETY ANALYSIS REPORT

FIGURE 3.8-16
PLAN OUTLET STRUCTURE
U.H.S. RETENTION POND

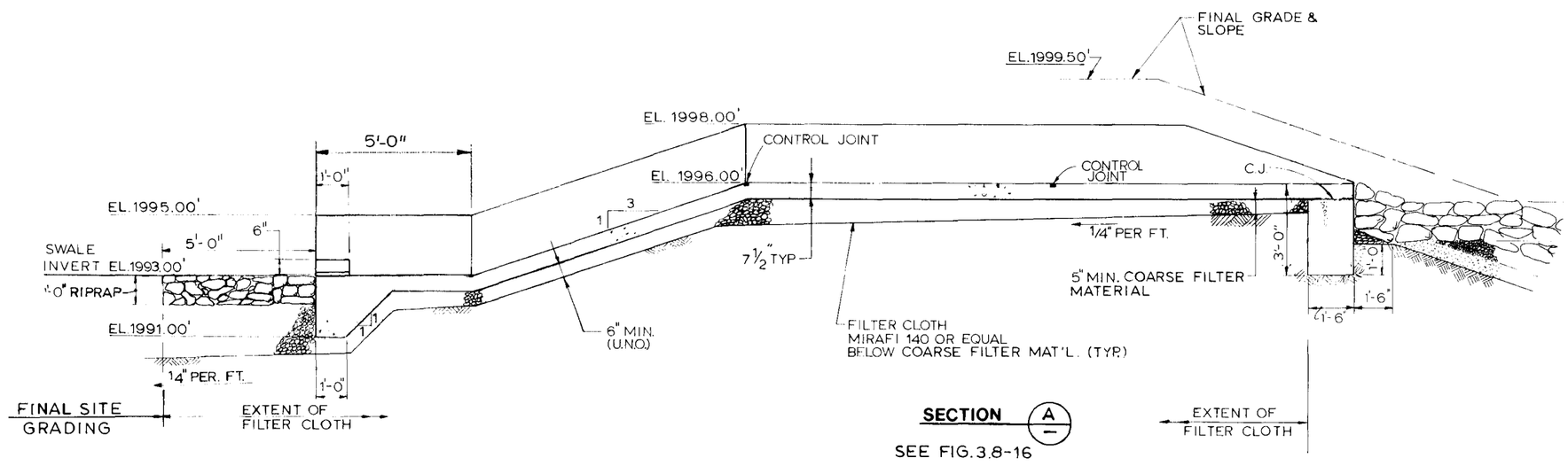

Rev. OL-0
6/86

UNION ELECTRIC COMPANY
CALLAWAY PLANT
FINAL SAFETY ANALYSIS REPORT

FIGURE 3.8-17
SECTION, OUTLET STRUCTURE
U.H.S. RETENTION POND

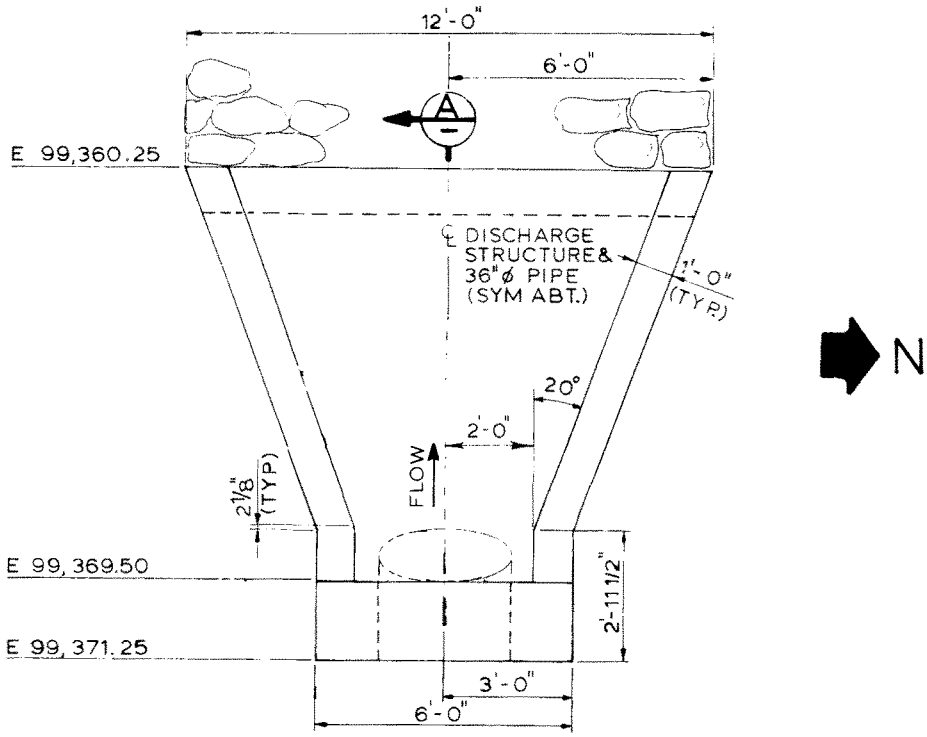

DISCHARGE STRUCTURE-PLAN

SCALE 1/2" = 1'-0"

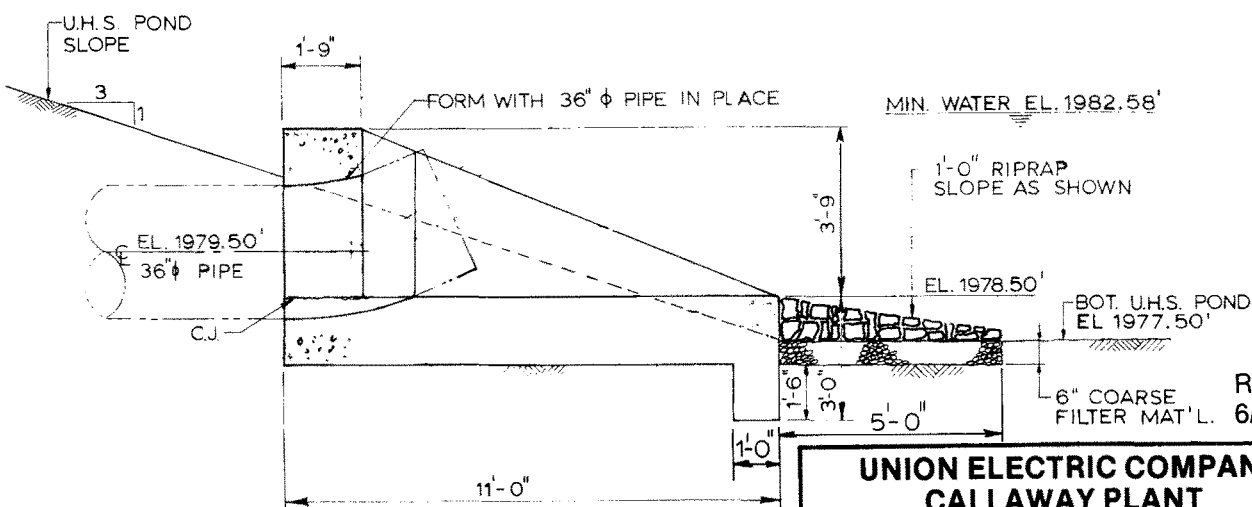

SECTION A

Rev. OL-0
6/86

UNION ELECTRIC COMPANY
CALLAWAY PLANT
FINAL SAFETY ANALYSIS REPORT

FIGURE 3.8-18
DISCHARGE STRUCTURE
U.H.S. RETENTION POND

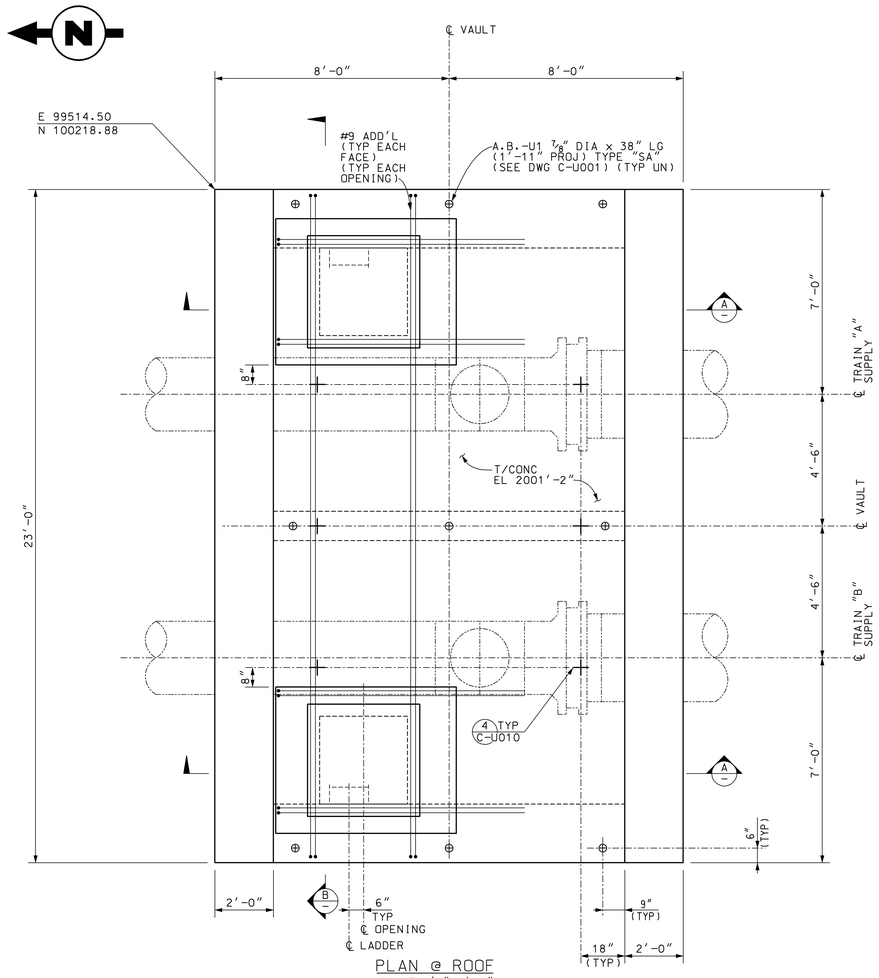

PLAN @ ROOF
SCALE: 1/2″=1′-0″

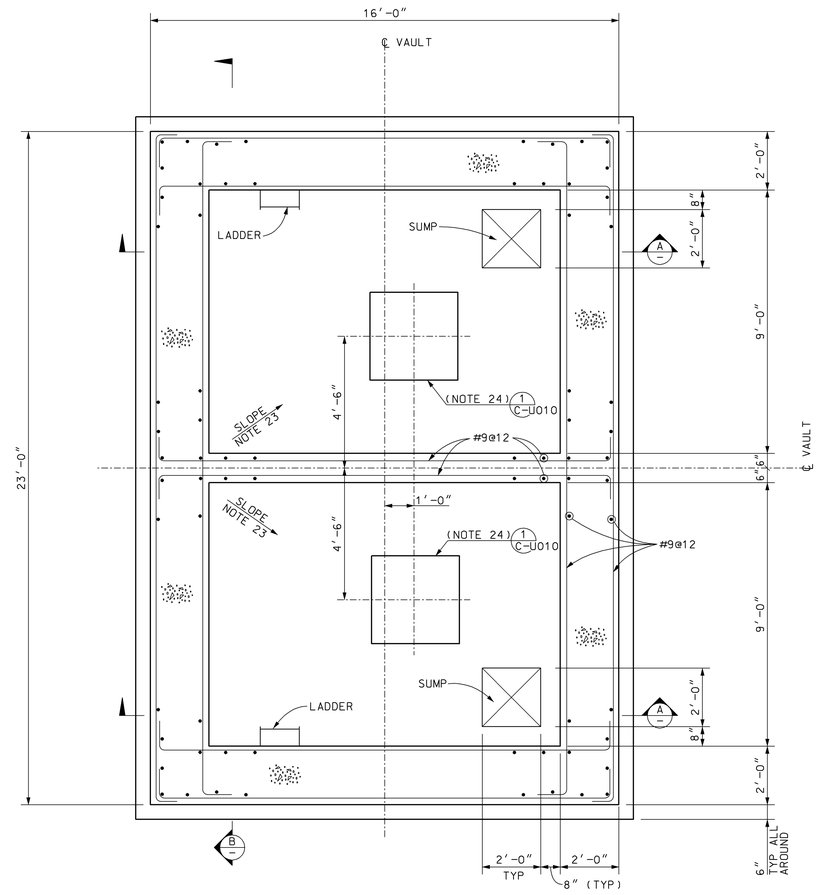

PLAN @ BASE SLAB
SCALE: 1/2″=1′-0″

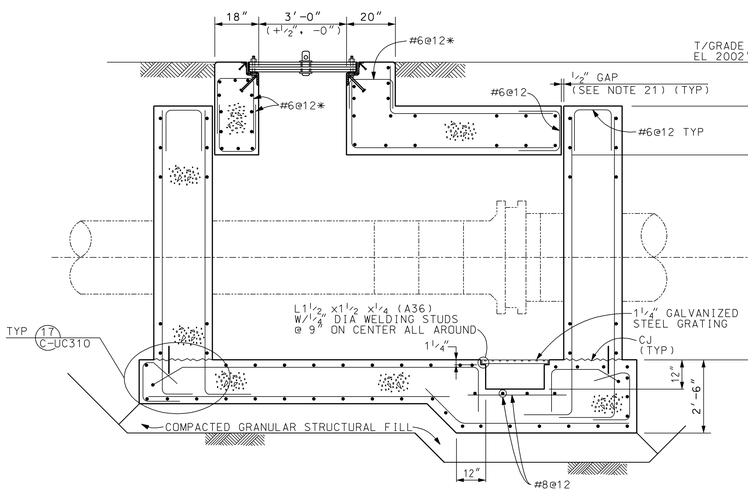

SECTION A
SCALE: 1/2″=1′-0″

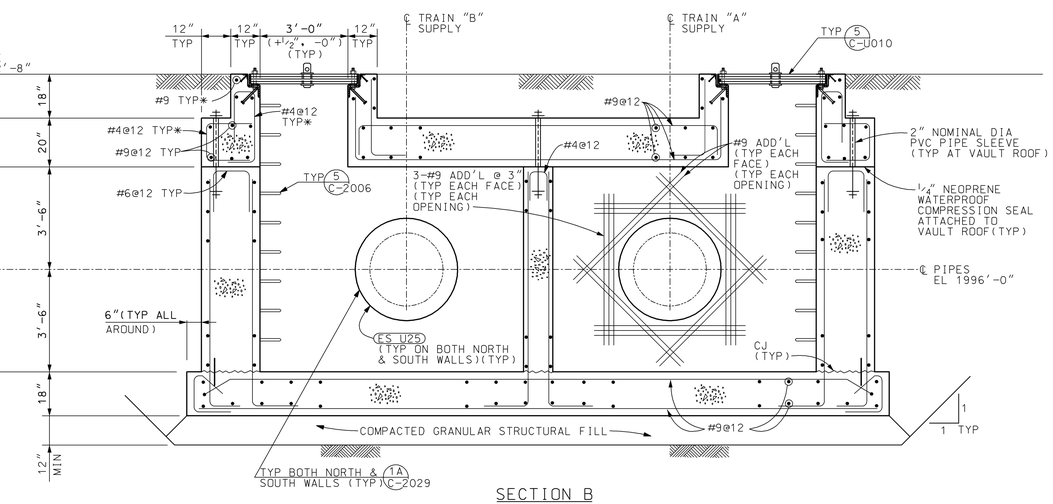

SECTION B
SCALE: 1/2″=1′-0″

CONSTRUCTION NOTES:

1. ALL WORK DONE BY CONTRACTOR/INSTALLER PURSUANT TO THIS DRAWING SHALL: (A) CONFORM TO THE GOVERNING CONTRACT DOCUMENTS; (B) BE PERFORMED EXCLUSIVELY BY ITS TRAINED, COMPETENT PERSONNEL OR, WHERE PERMITTED, THAT OF ITS SUBCONTRACTOR(S); AND (C) COMPLY WITH ALL APPLICABLE SAFETY LAWS, REGULATIONS, PROGRAMS AND PRACTICES TO ENSURE THE SAFETY OF ALL PEOPLE LOCATED ON THE WORK SITE, INCLUDING THE CONTRACTOR'S/INSTALLER'S PERSONNEL (OR THAT OF ITS SUBCONTRACTOR(S)) PERFORMING THE WORK.
2. UNDERGROUND OR EMBEDDED UTILITIES EXIST WITHIN THE AREA OF AND ADJACENT TO THE LIMITS OF THE WORK. THE LOCATION OR IDENTIFICATION OF SUCH UTILITIES HAS NOT BEEN VERIFIED BY PURCHASER OR BY S&L. CONTRACTOR/INSTALLER IS RESPONSIBLE FOR FIELD LOCATING AND IDENTIFYING UNDERGROUND OR EMBEDDED UTILITIES AND ANY OTHER UNDERGROUND OR EMBEDDED UTILITY DIMENSIONS.
3. REFERENCES USED HAVE BEEN IDENTIFIED ON EXCAVATION/FOUNDATION/DEMOLITION DRAWINGS AND HAVE BEEN PROVIDED TO ASSIST THE CONTRACTOR/INSTALLER IN THE FIELD LOCATING OF EXISTING UTILITIES AND OTHER POTENTIAL UNDERGROUND OR EMBEDDED INTERFERENCES. THESE REFERENCES ONLY SHOW THE APPROXIMATE LOCATION OF POTENTIAL UNDERGROUND OR EMBEDDED UTILITIES AND MAY NOT INDICATE OR REFLECT ALL EXISTING UNDERGROUND OR EMBEDDED UTILITIES OR THEIR ACTUAL LOCATIONS.
4. REFERENCES IDENTIFIED SHALL NOT SUBSTITUTE FOR THE CONTRACTOR'S/INSTALLER'S OBLIGATION TO FIELD LOCATE ANY UNDERGROUND OR EMBEDDED UTILITIES OR INTERFERENCES THAT MAY AFFECT THE WORK.
5. DUE CAUTION SHALL BE TAKEN DURING ANY EXCAVATION/FOUNDATION/DEMOLITION WORK WITHIN THE AREA OF AND ADJACENT TO THE LIMITS OF THE WORK DUE TO POSSIBLE INTERFERENCES THAT MAY NOT BE REFLECTED ON THE REFERENCES IDENTIFIED.
6. CONTRACTOR/INSTALLER SHALL TAKE ALL APPROPRIATE PRECAUTIONS TO ENSURE THE SAFETY OF ALL PEOPLE LOCATED ON THE WORK SITE, INCLUDING CONTRACTOR'S/INSTALLER'S PERSONNEL (OR THAT OF ITS SUBCONTRACTOR(S)) PERFORMING THE WORK.

NOTES

1. NOT USED.
2. ALL WORK SHOWN ON THIS DRAWING SHALL BE FURNISHED & INSTALLED PER PROJECT CONSTRUCTION SPECIFICATION C-101, C-107 & C-111.
3. ALL LIFTING EYES PROVIDED IN ROOF ARE REQUIRED TO BE UTILIZED WHEN LIFTING
4. TOP OF SUMP GRATING TO BE 3/4″ BELOW BASEMAT HIGH POINT ELEVATION.
5. VAULT SHALL BE PROPERLY VENTILATED BEFORE ENTERING.
6. CONCRETE COMPRESSIVE STRENGTH, fc′ (28 DAY STRENGTH), SHALL BE AT LEAST 5,000 PSI UNLESS NOTED OTHERWISE. VAULT ROOF SHALL BE PRECASTED WITH A CONCRETE COMPRESSIVE STRENGTH fc′ (90 DAY STRENGTH) OF AT LEAST 5,000 PSI.
7. REINFORCING BARS SHALL CONFORM TO ASTM A615 GRADE 60, DEFORMED BARS, UNLESS NOTED.
8. DETAILING OF REINFORCING BARS TO BE IN ACCORDANCE WITH ACI PUBLICATION SP-66 "ACI DETAILING MANUAL" LATEST EDITION.
9. REINFORCING BARS ADJACENT TO THE FACE OF CONCRETE SHALL HAVE THE FOLLOWING MINIMUM CONCRETE COVER UNLESS NOTED ON DESIGN DRAWING:
   a) CONCRETE CAST AGAINST EARTH OR OTHER SURFACE NOT FORMED ..... 3″
   b) FORMED CONCRETE SURFACES PERMANENTLY IN CONTACT WITH SOIL OR EXPOSED TO WEATHER: ..... 2″
   c) TOP BARS OF CONCRETE MATS AT GRADE. ..... 2″
   d) ALL OTHER CONDITIONS ..... 1 1/2″
10. FOR LAP AND DEVELOPMENT AND HOOK LENGTH:

LENGTHS GIVEN IN INCHES

BAR SIZE	LAP SPLICE LENGTH		DEVELOPMENT LENGTH		HOOK (90 DEG)		
	TOP BARS LST	OTHER BARS LSO	TOP BARS ELT	OTHER BARS ELO	H	ldh TOP BARS	ldh OTHER BARS
4	22	16	17	12	10	10	5
5	28	20	21	15	12	12	6
6	33	24	26	18	14	16	7
7	39	28	30	21	16	21	8
8	49	35	38	27	19	27	10
9	62	45	48	34	23	34	13

11. NOT USED.
12. FOR CONSTRUCTION TOLERANCE REFER TO ACI 117 LATEST EDITION, UNLESS OTHERWISE NOTED.
13. TYPICAL CONSTRUCTION JOINT DETAIL MAY BE USED BY CONCRETE WORK CONTRACTOR. THE LOCATION & NUMBER OF CONSTRUCTION JOINT SHALL BE APPROVED BY OWNER PRIOR TO FABRICATING REINFORCING BARS.
14. ALL CONSTRUCTION JOINTS (CJ) SHALL BE THOROUGHLY CLEANED AND MOISTENED. A LAYER OF MORTAR OF THE SAME STRENGTH OR GREATER AS THAT OF THE ADJACENT CONCRETE SHALL BE PLACED ON CONSTRUCTION JOINT SURFACES PRIOR TO PLACING FRESH CONCRETE. AS AN ALTERNATE TO PLACEMENT OF MORTAR, THE ENTIRE SURFACE MAY BE ROUGHENED IN ACCORDANCE WITH ACI 301 LATEST EDITION.
15. ALL GRANULAR BACKFILL SHALL BE FURNISHED & INSTALLED IN ACCORDANCE WITH SPECIFICATION 4645-32A(Q).
16. CONCRETE SHALL NOT BE PLACED UNTIL THE FORMS, REINFORCEMENT AND EMBEDDED ITEMS HAVE BEEN INSPECTED AND APPROVED BY OWNER.
17. TOP SURFACE OF CONCRETE SHALL RECEIVE A "BROOMED FINISH" AS DEFINED ACI 301-99.
18. "WS" INDICATES WATER STOP SHALL BE 9″ WIDE CENTER DUMBBELL TYPE HIGH GRADE RUBBER CONFORMING TO CRD-C513.
19. FOR PENETRATION SLEEVE DETAILS MARKED (ES XXX) SEE DRAWING C-U003.
20. BACKFILL INSIDE OF RETAINING WALL SHALL BE CONCURRENT WITH BACKFILL OF OUTSIDE RETAINING WALL.
21. FILL GAP WITH HBR BACKER ROD BY NOMACO OR EQUAL. SEAL TOP WITH SILICONE SEALANT OR EQUIVALENT.
22. FOR TYPICAL REINFORCING BAR DETAILS SEE DWG C-UC310. FOR OTHERS SEE DWG C-2003.
23. TOP OF BASE MAT CONCRETE TO BE SLOPED FROM EDGE OF CONCRETE WALL TO THE SUMP WITH A MINIMUM TOTAL ELEVATION DROP OF 1/4″ FROM HIGH POINT TO LOW POINT.
24. EMBED PLATES NOT TO BE SLOPED WITH CONCRETE FLOOR.
25. "*" INDICATES BARS REQUIRED AT MANWAY EXTENTIONS ONLY.

REFERENCE DRAWINGS

C-U001	E.S.W.S. ANCHOR BOLT DETAILS
C-U010	E.S.W.S & U.H.S. EMBEDDED PLATE & MISC DETAILS
C-2006	CIVIL - STRUCTURAL STANDARD DETAILS
C-U003	E.S.W.S & U.H.S. EMBEDDED SLEEVE DETAILS
C-U310	ESW PUMPHOUSE VAULTS ADDITIONAL SECTIONS & DETAILS
C-2029	CIVIL - STRUCTURAL STANDARD DETAILS

REV.	DATE
0	062509

DRAWN	CHKD.	SUPV.
MAL	TJC	TWS

INITIAL ISSUE PER MP 07-0066 FCN-09, FCN-23, FCN-15.

REV.	DATE
1	090314

DRAWN	CHKD.	SUPV.
MAL	RLW	DME

INCORP. CAR 201404565 ACTION 1.

AS-BUILT

DRAWN (DATE) N/A	ESW SUPPLY LINE YARD VAULT PLANS & SECTIONS	
CHKD. (DATE) N/A		
SUPV. (DATE) N/A	FSAR SA FIGURE 3.8-19 (1)	
APPD. (DATE) N/A	LOCATION: CALLAWAY ENERGY CENTER	CLASS
UNION ELECTRIC COMPANY ST. LOUIS, MO.	C-U209	REV. 1