CHAPTER 4

IRRADIATION UNIT AND RADIOISOTOPE PRODUCTION FACILITY DESCRIPTION

TABLE OF CONTENTS

Section	Title	Page
4a2	IRRADIATION FACILITY DESCRIPTION	4a2.1-1
4a2.1	SUMMARY DESCRIPTION	4a2.1-1
4a2.2	SUBCRITICAL ASSEMBLY	4a2.2-1
4a2.2.1	TARGET SOLUTION	4a2.2-1
4a2.2.2	REACTIVITY CONTROL MECHANISMS	4a2.2-7
4a2.2.3	NEUTRON MODERATOR AND REFLECTOR	4a2.2-9
4a2.2.4	SUBCRITICAL MULTIPLICATION SOURCE	4a2.2-9
4a2.2.5	SUBCRITICAL ASSEMBLY SUPPORT STRUCTURE	4a2.2-10
4a2.2.6	NEUTRON MULTIPLIER	4a2.2-11
4a2.3	NEUTRON DRIVER ASSEMBLY SYSTEM	4a2.3-1
4a2.3.1	NEUTRON DRIVER	4a2.3-2
4a2.3.2	NEUTRON DRIVER SUPPORT EQUIPMENT	4a2.3-3
4a2.3.3	OPERATION OVERVIEW	4a2.3-3
4a2.3.4	CONTROL SYSTEM	4a2.3-4
4a2.3.5	TRITIUM DESIGN	4a2.3-5
4a2.3.6	SEISMIC DESIGN	4a2.3-5
4a2.3.7	TARGET CHAMBER	4a2.3-6
4a2.3.8	PROCESS CONTROL REQUIREMENTS	4a2.3-6
4a2.3.9	TECHNICAL SPECIFICATIONS	4a2.3-7

CHAPTER 4

IRRADIATION UNIT AND RADIOISOTOPE PRODUCTION FACILITY DESCRIPTION

TABLE OF CONTENTS

Section	Title	Page
4a2.4	TARGET SOLUTION VESSEL AND LIGHT WATER POOL	4a2.4-1
4a2.4.1	TARGET SOLUTION VESSEL	4a2.4-1
4a2.4.2	LIGHT WATER POOL	4a2.4-5
4a2.4.3	TECHNICAL SPECIFICATIONS	4a2.4-7
4a2.5	IRRADIATION FACILITY BIOLOGICAL SHIELD	4a2.5-1
4a2.5.1	INTRODUCTION	4a2.5-1
4a2.5.2	BIOLOGICAL SHIELD DESIGN BASIS	4a2.5-1
4a2.5.3	SHIELD MATERIALS	4a2.5-2
4a2.5.4	ANALYSIS	4a2.5-5
4a2.5.5	TEST PROGRAM	4a2.5-7
4a2.5.6	TECHNICAL SPECIFICATIONS	4a2.5-7
4a2.6	NUCLEAR DESIGN	4a2.6-1
4a2.6.1	NORMAL OPERATING CONDITIONS	4a2.6-1
4a2.6.2	TARGET SOLUTION PHYSICS PARAMETERS	4a2.6-16
4a2.6.3	OPERATING LIMITS	4a2.6-28
4a2.7	THERMAL HYDRAULIC DESIGN	4a2.7-1
4a2.7.1	HEAT REMOVAL SYSTEMS	4a2.7-1
4a2.7.2	ACCOMODATION OF VARYING POWER	4a2.7-4
4a2.7.3	COOLING WATER HYDRAULIC CHARACTERISTICS OF THE TSV	4a2.7-4
4a2.7.4	TARGET SOLUTION THERMAL POWER DENSITY DISTRIBUTION	4a2.7-8

CHAPTER 4

IRRADIATION UNIT AND RADIOISOTOPE PRODUCTION FACILITY DESCRIPTION

TABLE OF CONTENTS

Section		Title	Page
	4a2.7.5	THERMAL-HYDRAULIC CALCULATIONS AND METHODOLOGY	4a2.7-8
	4a2.7.6	IMPACT OF OPERATING CONDITIONS ON THERMAL-HYDRAULICS	4a2.7-13
	4a2.7.7	TARGET SOLUTION CONDITIONS TO ENSURE VESSEL INTEGRITY AND PREVENT BOILING	4a2.7-15
	4a2.7.8	COOLING SYSTEM DESIGN BASES	4a2.7-16
	4a2.7.9	BULK BOILING OF THE TARGET SOLUTION	4a2.7-16
	4a2.7.10	TECHNICAL SPECIFICATIONS	4a2.7-17
4a2.8		GAS MANAGEMENT SYSTEM	4a2.8-1
	4a2.8.1	SYSTEM DESCRIPTION	4a2.8-1
	4a2.8.2	SYSTEM PROCESS AND SAFETY FUNCTIONS	4a2.8-1
	4a2.8.3	TSV OFF-GAS PROCESS FLOW DIAGRAM	4a2.8-2
	4a2.8.4	TOGS MAJOR COMPONENTS AND SYSTEM INTERFACES	4a2.8-2
	4a2.8.5	ABNORMAL CONDITIONS	4a2.8-3
	4a2.8.6	RADIATION AND HYDROGEN CONCENTRATION CONTROL/MONITORING	4a2.8-5
	4a2.8.7	PROTECTION AGAINST INOPERATIVE TOGS	4a2.8-6
	4a2.8.8	TECHNICAL SPECIFICATIONS	4a2.8-6
4a2.9		REFERENCES	4a2.9-1

CHAPTER 4

IRRADIATION UNIT AND RADIOISOTOPE PRODUCTION FACILITY DESCRIPTION

TABLE OF CONTENTS

Section	Title	Page
4b	RADIOISOTOPE PRODUCTION FACILITY DESCRIPTION	4b.1-1
4b.1	FACILITY AND PROCESS DESCRIPTION	4b.1-1
4b.1.1	INTRODUCTION	4b.1-1
4b.1.2	FACILITY DESCRIPTION	4b.1-1
4b.1.3	PROCESS DESCRIPTION	4b.1-2
4b.2	RADIOISOTOPE PRODUCTION FACILITY BIOLOGICAL SHIELD	4b.2-1
4b.2.1	INTRODUCTION	4b.2-1
4b.2.2	BIOLOGICAL SHIELD DESIGN BASIS	4b.2-1
4b.2.3	SHIELD MATERIALS	4b.2-3
4b.2.4	ANALYSIS	4b.2-5
4b.2.5	TEST PROGRAM	4b.2-6
4b.2.6	TECHNICAL SPECIFICATIONS	4b.2-7
4b.3	RADIOISOTOPE EXTRACTION SYSTEM	4b.3-1
4b.3.1	RADIOISOTOPE EXTRACTION PROCESS DESCRIPTION	4b.3-1
4b.3.2	PHYSICAL PROPERTIES	4b.3-7
4b.3.3	CRITICALITY CONTROL FEATURES	4b.3-8
4b.3.4	SHIELDING AND RADIOLOGICAL PROTECTION	4b.3-8
4b.3.5	MEPS HOT WATER LOOP SUBSYSTEM	4b.3-8
4b.3.6	TECHNICAL SPECIFICATIONS	4b.3-9

CHAPTER 4

IRRADIATION UNIT AND RADIOISOTOPE PRODUCTION FACILITY DESCRIPTION

TABLE OF CONTENTS

Section	Title	Page
4b.4	SPECIAL NUCLEAR MATERIAL PROCESSING AND STORAGE	4b.4-1
4b.4.1	PROCESSING OF IRRADIATED SPECIAL NUCLEAR MATERIAL	4b.4-2
4b.4.2	PROCESSING OF UNIRRADIATED SPECIAL NUCLEAR MATERIAL	4b.4-4
4b.5	REFERENCES	4b.5-1

LIST OF TABLES

Number	Title
4a2.1-1	Irradiation Unit Key Operating Parameters
4a2.2-1	Target Solution Chemical and Physical Properties
4a2.2-2	Target Solution Operating Limits
4a2.2-3	Neutron Source Energy Spectra
4a2.3-1	Neutron Driver Nominal Design Parameters
4a2.6-1	Typical Neutron Flux Ranges
4a2.6-2	Plutonium from Target Solution Transmutation
4a2.6-3	Reactivity Changes Due to PCLS Voids
4a2.6-4	Reactivity Changes Due to Loss of Light Water Pool
4a2.6-5	TSV Fill Limits
4a2.6-6	Calculated Core Effective Multiplication Factors
4a2.6-7	Maximum Additional Volume Margin to Critical to Compensate for Water Holdup
4a2.6-8	Nominal Removal Rates for Elements Affecting Reactivity
4a2.6-9	Power Density Limits for Target Solution
4a2.6-10	Limiting Core Configuration Calculated Parameters
4a2.8-1	TSV Off-Gas System Major Components
4a2.8-2	TSV Off-Gas System Interfaces
4b.3-1	MEPS Interfaces
4b.3-2	IXP Interfaces
4b.3-3	MEPS Extraction Chemical Inventory (Approximate)
4b.3-4	MEPS Purification Chemical Inventory (Approximate)
4b.3-5	IXP Chemical Inventory (Approximate)

LIST OF TABLES

Number	Title
4b.4-1	Special Nuclear Material Maximum Inventory in the Main Production Facility (Approximate)
4b.4-2	Physical and Chemical Forms of SNM within RPF Processes
4b.4-3	TSSS Interfaces
4b.4-4	TSPS Hazardous Chemicals Inventory (Approximate)
4b.4-5	URSS Interfaces
4b.4-6	TSPS Interfaces

LIST OF FIGURES

Number	Title
4a2.1-1	Irradiation Unit Cell Schematic
4a2.1-2	Subcritical Assembly System
4a2.2-1	Target Solution Tank Elevations
4a2.2-2	Primary System Interfaces During Irradiation Unit Operation
4a2.2-3	Temperature Profiles of Multiplier at Beginning of Life (BOL) and End of Life (EOL)
4a2.3-1	Neutron Driver Assembly General Arrangement (Not to Scale)
4a2.3-2	Neutron Driver Assembly Differential Pumping General Arrangement (Not to Scale)
4a2.4-1	Light Water Pool Loss of Cooling Heatup Curve
4a2.5-1	Irradiation Facility Biological Shield (not to scale)
4a2.6-1	1/M Curves
4a2.6-2	Xe-135 and Sm-149 Worth for Cycles 1-4
4a2.6-3	Xe-135 and Sm-149 Worth for End of Life Cycles
4a2.6-4	Power and Temperature Transients Due to Changes in TOGS Pressure Partially Collapsing Void in Target Solution
4a2.6-5	Void Collapse Transient at 100 Seconds, Lasting for 10 Seconds
4a2.6-6	Accelerator Transient from 100 Percent Output to 0 Percent Output for 60 Seconds, Followed by Return to 100 Percent Output
4a2.6-7	Accelerator Transient from 100 Percent Output to 80 Percent Output for 80 Seconds, Followed by Return to 100 Percent Output
4a2.6-8	Accelerator Transient, Output Oscillations of 10 Percent with a 5 Second Period
4a2.6-9	Accelerator Transient, Output Oscillations of 10 Percent with a 1 Hour Period
4a2.6-10	Primary Cooling Transient from 20°C to 25°C to 15°C
4a2.6-11	Axial Flux Densities
4a2.6-12	Radial Flux Densities
4a2.6-13	Distribution of Fast, Epithermal, and Thermal Neutron Fluxes

LIST OF FIGURES

Number	Title
4a2.6-14	Power Coefficients for Nominal and Limiting Core Configurations
4a2.6-15	Void Collapse Transient for Eight Different Bubble Zone Transit Times
4a2.6-16	Nominal Standard Startup Transient for Eight Different Bubble Zone Transit Times
4a2.6-17	Accelerator Dropout Transient for Eight Different Bubble Zone Transit Times
4a2.6-18	Temperature Coefficient of Reactivity
4a2.6-19	Inadvertent Fill Progression
4a2.7-1	Target Solution Vessel Heat Transfer Surfaces
4a2.7-2	Limiting Core Configuration Power Density (kW/L)
4a2.7-3	Target Solution Vessel Heat Transfer Paths
4a2.7-4	Target Solution Vessel Dump Tank Bounding Temperature Profile
4a2.8-1	Subcritical Assembly System and TSV Off-Gas System Flow Diagram
4b.2-1	Vault Shielding and Pipe Penetration - General Arrangement (Not to Scale)
4b.2-2	Waste Bore Hole Shielding - General Arrangement (Not to Scale)
4b.2-3	RLWI Shielding Entry and Exit Facilities - General Arrangement (Not to Scale)
4b.2-4	Supercell Shielding - General Arrangement (Not to Scale)
4b.3-1	MEPS Process Flow Diagram
4b.3-2	IXP Process Flow Diagram
4b.4-1	Target Solution Storage System Process Flow Diagram
4b.4-2	Uranium Receipt and Storage System Process Flow Diagram
4b.4-3	Target Solution Preparation System Process Flow Diagram

ACRONYMS AND ABBREVIATIONS

Acronym/Abbreviation	Definition
γ/cm^2-s	gamma photons per square centimeter per second
μm	micrometers
ACI	American Concrete Institute
AGS	American Glovebox Society
AHR	aqueous homogeneous reactor
ALARA	as low as reasonably achievable
Am	americium
ANL	Argonne National Laboratory
ANS	American Nuclear Society
ANSI	American National Standards Institute
ASME	American Society of Mechanical Engineers
atm	atmosphere
Be	beryllium
BPVC	Boiler and Pressure Vessel Code

ACRONYMS AND ABBREVIATIONS

Acronym/Abbreviation	Definition
Btu	British thermal unit
Btu/hr	British thermal units per hour
Btu/hr-ft^2	British thermal units per hour per square foot
CAAS	criticality accident alarm system
CAMS	continuous air monitoring system
CC1	cooling channel 1
CC2	cooling channel 2
CC3	cooling channel 3
Ci	curie
cm	centimeters
D	deuterium
DBEQ	design basis earthquake
DT	deuterium-tritium
ECR	electron cyclotron resonance
EFPD	effective full power day
ESFAS	engineered safety features actuation system

ACRONYMS AND ABBREVIATIONS

Acronym/Abbreviation	Definition
FCRS	facility chemical reagent system
FHA	fire hazard analysis
fl. oz.	fluid ounce
FNHS	facility nitrogen handling system
fps	feet per second
ft.	feet
g	gram
g/cm^3	grams per cubic centimeter
g/L	grams per liter
g/s	grams per second
gal	gallon
gpm	gallons per minute
gU/L	grams of uranium per liter
H_2	hydrogen gas
H_2SO_4	sulfuric acid
HVPS	high voltage power supply

ACRONYMS AND ABBREVIATIONS

Acronym/Abbreviation	Definition
I	iodine
ICBS	irradiation cell biological shield
ICSBEP	International Handbook of Evaluated Criticality Safety Benchmark Experiments
IF	irradiation facility
in.	inch
IRPhE	International Handbook of Evaluated Reactor Physics Benchmark Experiments
IU	irradiation unit
IXP	iodine and xenon purification and packaging
J/g°C	joules per gram degree centigrade
k_{eff}	effective neutron multiplication factor
keV	thousand electron volts
KEWB	Kinetics Experiments on Water Boilers
kg	kilogram
kg/hr	kilograms per hour
kg/L	kilograms per liter

ACRONYMS AND ABBREVIATIONS

Acronym/Abbreviation	Definition
kg/TSV batch	kilograms per TSV batch
kPa	kilopascal
kV	kilovolt
kW	kilowatt
kW/L	kilowatts per liter
kW/m^2	kilowatts per square meter
L (l)	liter
L/m	liters per minute
L/s	liters per second
L/TSV batch (l/TSV batch)	liters per TSV batch
LANL	Los Alamos National Laboratory
lb.	pound
lb/ft^3	pounds per cubic foot
lb/TSV batch	pounds per TSV batch
lbm/hr	pounds-mass per hour
lbU/gal	pounds of uranium per gallon

ACRONYMS AND ABBREVIATIONS

Acronym/Abbreviation	Definition
LEU	low-enriched uranium
LFL	lower flammability limit
LOOP	loss of off-site power
LWPS	light water pool system
LWR	light water reactor
M	molar (moles per liter)
m	meters
m/s	meters per second
M1TF	Mode 1 Trip Factor
MCNP	Monte Carlo N-Particle Transport Code
MEPS	molybdenum extraction and purification system
MeV	million electron volt
MeV/cm^2-sec	megaelectron volts per square centimeter per second
mg/mL	milligram per milliliter
MIPS	molybdenum isotope product packaging system
mL	milliliter

ACRONYMS AND ABBREVIATIONS

Acronym/Abbreviation	Definition
Mo	molybdenum
Mo-99	molybdenum-99
mrem/hr	millirem per hour
n/cm^2	neutrons per square centimeter (neutron fluence)
n/cm^2-sec	neutrons per square centimeter per second (neutron flux)
n/s	neutrons per second
N2PS	nitrogen purge system
NaOH	sodium hydroxide
NDAS	neutron driver assembly system
NFDS	neutron flux detection system
NOx	nitrogen oxide
NPS	nominal pipe size
NPSS	normal electrical power supply system
NSCR	normal startup count rate

ACRONYMS AND ABBREVIATIONS

Acronym/Abbreviation	Definition
ORIGEN	Oak Ridge Isotope Generation
ORNL	Oak Ridge National Laboratory
PCLS	primary closed loop cooling system
pcm	percent millirho
pcm/°C	percent millirho per degree Celsius
PFBS	production facility biological shield
PFD	process flow diagram
PICS	process integrated control system
ppm	parts per million
PSB	primary system boundary
psi	pounds per square inch
psig	pounds per square inch gage
Pu	plutonium
Pu-239	plutonium-239
PVVS	process vessel vent system

ACRONYMS AND ABBREVIATIONS

Acronym/Abbreviation	Definition
RAMS	radiation area monitoring system
RCA	radiologically controlled area
RDS	radioactive drain system
RLWI	radioactive liquid waste immobilization
RLWS	radioactive liquid waste storage
RPCS	radioisotope process facility cooling system
RPF	radioisotope production facility
RPP	Radiation Protection Program
RSICC	Radiation Safety Information Computational Center
RVZ1	radiological ventilation zone 1
RVZ1e	radiological ventilation zone 1 exhaust subsystem
RVZ1r	radiological ventilation zone 1 recirculating subsystem
RVZ2	radiological ventilation zone 2
SASS	subcritical assembly support structure
SCALE	Standardized Computer Analyses for Licensing Evaluations

ACRONYMS AND ABBREVIATIONS

Acronym/Abbreviation	Definition
SCAS	subcritical assembly system
sccm	standard cubic centimeters per minute
scfh	standard cubic feet per hour
scfm	standard cubic feet per minute
SITCCOM	SHINE Isotope Tracking Code Coupling ORIGEN and MCNP
slpm	standard liters per minute
Sm-149	samarium-149
SNM	special nuclear material
SRWP	solid radioactive waste packaging
SSC	structure, system, and component
T	tritium
TOGS	TSV off-gas system
TPS	tritium purification system
TRIAD	Transient Reactivity Integration Accelerator Driven Multiphysics Code
TRPS	TSV reactivity protection system

ACRONYMS AND ABBREVIATIONS

Acronym/Abbreviation	Definition
TSPS	target solution preparation system
TSSS	target solution staging system
TSV	target solution vessel
U-235	uranium-235
U-238	uranium-238
UPSS	uninterruptible electrical power supply system
URSS	uranium receipt and storage system
V&V	verification and validation
VTS	vacuum transfer system
Xe	xenon
Xe-135	xenon-135
yd^3	cubic yards

4a2 IRRADIATION FACILITY DESCRIPTION

This section describes the SHINE irradiation units and supporting systems used for the irradiation of uranyl sulfate target solution as part of the irradiation facility (IF).

4a2.1 SUMMARY DESCRIPTION

An irradiation unit (IU) is an accelerator-driven subcritical operating assembly used for the irradiation of an aqueous uranyl sulfate target solution, resulting in the production of molybdenum-99 (Mo-99) and other fission products. An accelerator is used to create deuterium-tritium fusion reactions, resulting in the formation of 14 million electron volt (MeV) neutrons. These high-energy neutrons cause various multiplying reactions in the neutron multiplier, which increase the neutron population entering the target solution vessel (TSV). The neutron population in the TSV leads to fissioning of the uranium solution. Without operation of the accelerator, the fission process essentially terminates. Key operating parameters for the IU are provided in Table 4a2.1-1.

An IU cell is comprised of the following (see Figure 4a2.1-1):

- Biological shielding: The IUs are surrounded by a biological shield that protects facility workers from sources of radiation inside the IU cell. A detailed description of the biological shield is provided in Section 4a2.5.
- Neutron driver assembly system (NDAS): An accelerator-based assembly is used to produce 14 MeV neutrons by the fusion of deuterium and tritium in the tritium target chamber. These neutrons then drive the fission reactions required for the production of Mo-99 and other fission products. The neutron driver is suspended above the subcritical assembly on support beams attached to the IU cell walls and is intended to be regularly replaced over the operating life of the facility. A detailed description of the NDAS is provided in Section 4a2.3.
- Light water pool: The light water pool serves two primary functions: shielding and cooling. The light water pool is the safety-related feature provided for heat removal from the subcritical assembly. In the event of a failure of the primary closed loop cooling system (PCLS), the target solution is drained to the TSV dump tank and the thermal mass provided by the light water pool provides sufficient decay heat removal capacity. See Section 4a2.4 for more information on the light water pool. Finally, the light water pool provides shielding necessary to allow manned entry to the IU cells when the IU is shut down and reduces biological shield wall thickness requirements.
- Subcritical assembly system (SCAS): The SCAS consists of the TSV, neutron multiplier, subcritical assembly support structure (SASS), subcritical multiplication source, and other components to safely contain the target solution during the irradiation process.
- Neutron flux detection system (NFDS): Neutron flux monitors are located as shown in Figure 4a2.1-2. A detailed description of the NFDS is provided in Section 7.8.

The systems supporting the IU cell include:

- Tritium purification system (TPS): The TPS is located outside the IU cell except for lines interfacing with the NDAS. The neutron driver is connected to the tritium system by supply and return lines that pass through the IU cell shield wall. During operation, purified tritium gas is supplied to the tritium target chamber, deuterium gas is supplied to the

accelerator, and mixed gas is returned to TPS for purification and re-use. A detailed description of the TPS is provided in Section 9a2.7.

- TSV off-gas system (TOGS): The TOGS is a catalytic hydrogen recombination system designed to maintain the hydrogen concentrations in the TSV and TSV dump tank gas space below the lower flammability limit (LFL). The majority of the system components are located inside the TOGS shielded cell and the IU cell. A detailed description of the TOGS is provided in Section 4a2.8.
- Primary closed loop cooling system: The PCLS is an active cooling system designed to remove heat from the TSV and neutron multiplier during IU operation. The PCLS includes filters to remove activation products, heat exchangers for rejection of heat to the secondary coolant system, and deionizer units. A detailed description of the PCLS is provided in Section 5a2.2.

Subcritical Assembly

Each IU cell contains one neutron driver, which generates a deuteron beam coaxially with the subcritical assembly. The neutron driver accelerates a deuteron beam into a tritium containing target chamber, which is located in the center of the subcritical assembly. The deuteron beam impinging on the tritium gas yields a neutron source with a shape similar to a vertical line distribution along the axis of the tritium target chamber. A small amount of tritium gas travels up the beam path leading to a small fraction of the reactions occurring above the target chamber. These fusion neutrons then move outward in all directions, with a nearly isotropic spectrum.

As the neutrons move outward, most of them enter the neutron multiplier and TSV. While the individual path of any single neutron is complicated, the overall effect of the subcritical assembly is to multiply the fusion neutrons, slow them down to thermal energy, and cause them to fission uranium-235 (U-235) atoms.

The multiplication of the neutrons happens in two primary locations: the neutron multiplier and the TSV. The neutron multiplier produces additional neutrons primarily through (n,2n), (n,3n), and fission reactions, while the TSV produces additional neutrons primarily through fission reactions. The slowing down of the neutrons occurs primarily in the TSV and the surrounding light water pool.

The subcritical assembly is composed of the following:

- Neutron multiplier: The neutron multiplier is located in the space between the neutron driver tritium target chamber and the TSV. It is comprised of a natural uranium metal core, encapsulated within an aluminum jacket. A detailed description of the neutron multiplier is provided in Subsection 4a2.2.6.
- Target solution vessel: The TSV is the stainless steel vessel that contains the uranyl sulfate target solution undergoing irradiation for the production of Mo-99 and other fission products. The TSV, excluding nozzles, is located within the SASS pressure boundary. A detailed description of the TSV is provided in Section 4a2.4.
- Subcritical assembly support structure: The seismically qualified SASS establishes the location of the subcritical assembly components relative to the neutron driver and facility structure. A detailed description of the SASS is provided in Subsection 4a2.2.5. In addition, the SASS surrounds the TSV. While the SASS is not a complete second fission product boundary for the entire system, it does provide an additional degree of defense-in-depth for the components exposed to the highest neutron fluxes in the system.

Cooling water supplied by the PCLS flowing through the subcritical assembly, inside the SASS, is the primary heat removal mechanism for the subcritical assembly during neutron driver operation. However, forced convection of the cooling water is not a safety-related function. In the event of low cooling water flow, the neutron driver high voltage supply is tripped and the target solution is dumped to the TSV dump tank. In the TSV dump tank, the light water pool provides sufficient thermal capacity to remove the decay heat from the target solution, and is credited as providing passive decay heat removal for normal conditions and design basis accidents.

- Subcritical multiplication source: The subcritical multiplication source is a fixed neutron source in the subcritical assembly that is used to monitor the state of the reactivity of the assembly when the neutron driver is not producing neutrons. This is a small neutron source (in comparison to the neutron driver) that facilitates the performance of 1/M measurements during the startup process. It provides a stable level of background neutrons so that neutron multiplication in the subcritical assembly can be accurately and reliably measured while filling the TSV with target solution. Details of the subcritical multiplication source are provided in Subsection 4a2.2.4.
- TSV dump valves: The TSV dump valves are provided to drain the TSV, whether as part of the process prior to transferring the target solution downstream for processing, or as a safety-related feature utilized as part of a planned response in the event of an IU abnormal condition. The valves are located in redundant flow paths and fail to a safe (open) position. The process integrated control system (PICS) and the TSV reactivity protection system (TRPS) are configured in a series configuration with respect to dump valve control, so either system has ability to open the dump valves.
- TSV dump tank: The TSV dump tank is normally utilized as a hold tank for target solution decay prior to transfer to the radioisotope production facility (RPF). The TSV dump tank is physically located below the TSV to allow for the gravity transfer of the target solution from the TSV to a passively cooled, geometrically favorable storage tank in the event of an abnormal condition or accident scenario.

The subcritical assembly is supported from the floor of the light water pool, beneath the neutron driver, and interfaces with the tritium target chamber. The subcritical assembly is designed such that routine replacement of its major components is not necessary.

Table 4a2.1-1 – Irradiation Unit Key Operating Parameters

Operating Parameter	Value and/or Description
Full Power Level of the Target Solution Vessel (TSV), fission	125 kW
Driver Neutron Production Rate	[ ]$^{PROP/ECI}$ to 1.5E+14 n/sec
Neutron Flux in the TSV	[ ]$^{PROP/ECI}$ n/cm^2-sec during irradiation
Neutron Multiplier Material	Natural uranium metal, aluminum-clad
Target Solution Uranium Type and Enrichment	Aqueous uranyl sulfate solution, [ ]$^{PROP/ECI}$ uranium concentration, 19.75 percent U-235 enrichment
Primary Cooling System Configuration	Forced convection cooling (deionized water), submersed in a heat-removing light water pool
Moderator Type	Light water
Reflector Type	Light water
Operating Type	Subcritical steady-state operation. Sustained nuclear reaction is not possible without the neutron addition provided by the accelerator when operated within technical specification limits.
Negative Temperature Coefficient	More negative than [ ]$^{PROP/ECI}$ during normal conditions Results in inherently limited power excursions (decreased reactivity with a power increase)
Negative Void Coefficient	More negative than [ ]$^{PROP/ECI}$ during normal conditions Results in inherently limited power excursions (decreased reactivity with a power increase)
Headspace hydrogen concentration	Maintains radiolytic hydrogen concentrations in the TSV below the LFL

Figure 4a2.1-1 – Irradiation Unit Cell Schematic

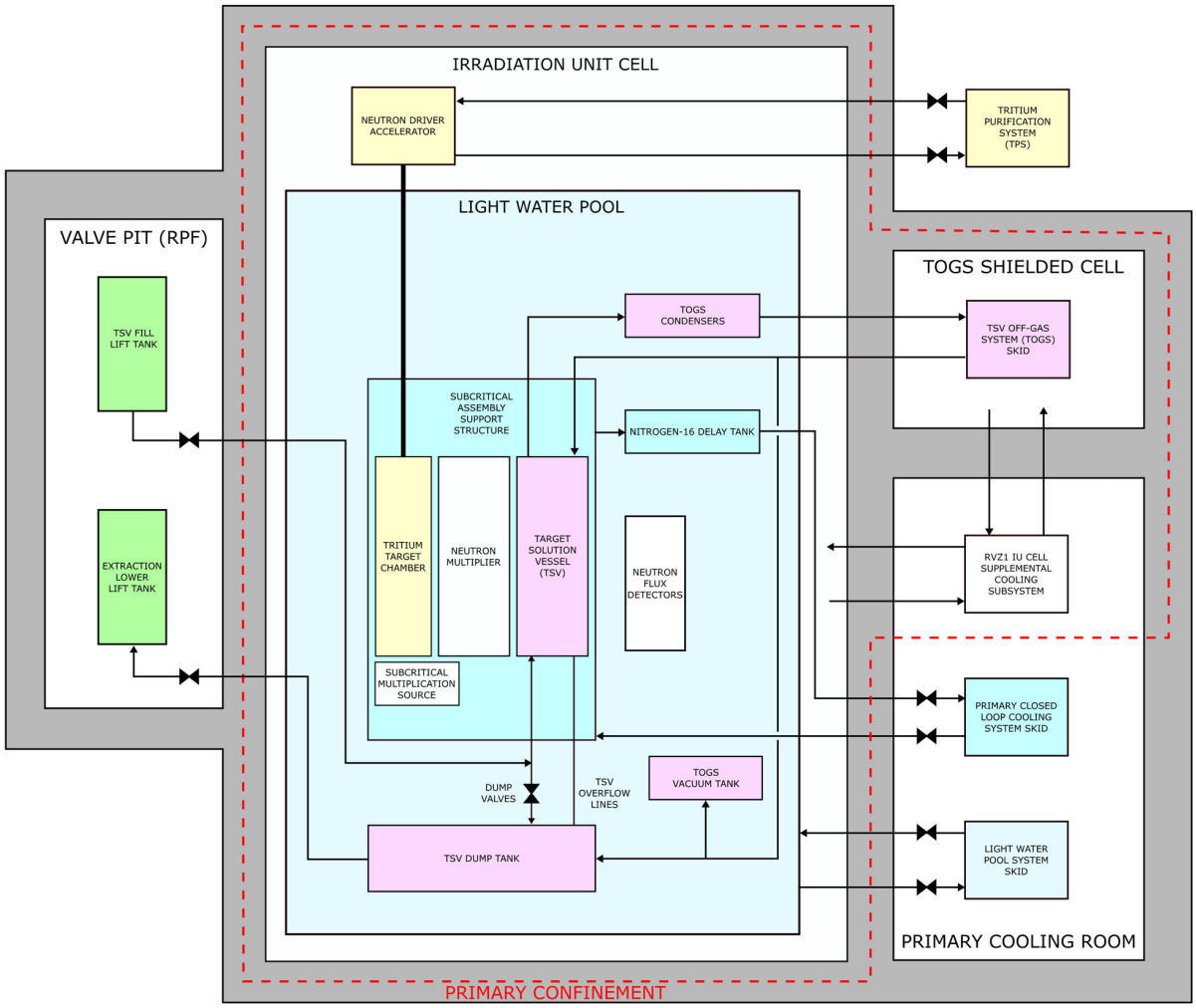

Proprietary Information – Withheld from public disclosure under 10 CFR 2.390(a)(4)
Export Controlled Information – Withheld from public disclosure under 10 CFR 2.390(a)(3)

Figure 4a2.1-2 – Subcritical Assembly System

Proprietary Information – Withheld from public disclosure under 10 CFR 2.390(a)(4)
Export Controlled Information – Withheld from public disclosure under 10 CFR 2.390(a)(3)

4a2.2 SUBCRITICAL ASSEMBLY

The principal systems that comprise an irradiation unit (IU) are the neutron driver assembly system (NDAS) and the subcritical assembly system (SCAS). The neutron driver is an accelerator-based neutron generator suspended above the light water pool and is described in detail in Section 4a2.3.

The SCAS maintains fissile material (i.e., uranium metal and uranyl sulfate target solution) in a subcritical, but highly multiplying configuration during the irradiation process to produce molybdenum-99 (Mo-99) and other fission products. The subcritical assembly is submerged in the light water pool, centered on a vertical centerline shared with the neutron driver. The subcritical assembly is primarily comprised of the target solution vessel (TSV), which contains the target solution during the irradiation process; a neutron multiplier; the subcritical assembly support structure (SASS); and the TSV dump tank. Figure 4a2.1-2 provides a depiction of the subcritical assembly.

4a2.2.1 TARGET SOLUTION

4a2.2.1.1 Description

The target solution is a uranyl sulfate solution that is irradiated in the TSV. The subsections below describe the chemical and radiological characteristics of the target solution and its interface with the subcritical assembly and supporting systems. Descriptions of the preparation, storage, and handling of the target solution can be found in Section 4b.4, Section 9a2.2, and Section 9b.2.

4a2.2.1.2 Chemical Properties

Table 4a2.2-1 provides the chemical and physical properties of the target solution for irradiation in the TSV. These properties are applicable to both fresh and previously irradiated target solution. The optimum uranium concentration of the system is a function of the desired cold fill height during Mode 1 (Startup) operation, the physical characteristics of the system design (e.g., wall thicknesses, material compositions), and other neutronics parameters (e.g., temperatures of cooling water and target solution). The optimum uranium concentration predicted by the SHINE neutronics models is approximately [ ]$^{PROP/ECI}$. Due to manufacturing tolerances and modeling bias, the operating band of uranium concentrations will be set during start-up testing. This operating band will fall within the uranium concentration range provided in Table 4a2.2-2.

4a2.2.1.3 Isotope Properties

Table 11.1-3 provides the nominal and safety-basis radionuclide inventories for a single TSV, following decay in the TSV dump tank and with the parameters listed in Table 11.1-1.

There are no significant quantities of fission products or transuranics in the fresh target solution because it has not been irradiated.

4a2.2.1.4 Primary System Boundary

The primary system boundary (PSB) includes the TSV, TSV dump tank, TSV off-gas system (TOGS), and associated components. The PSB is the primary fission product barrier for the IU. PSB components are designed to be compatible with the target solution to maintain corrosion within allowable limits and to avoid other unwanted metallurgical effects that could lead to the PSB being compromised. The TSV is located in the IU cell and primary confinement, which provides confinement protection to the facility, workers, and the public.

The PSB has a design pressure of 100 pounds per square inch (psi) (689 kilopascals [kPa]). The TSV, TSV dump tank, and most components of TOGS have a design temperature of 200°F (93°C). The TOGS hydrogen recombiners, recombiner condensers, and the interconnecting piping have a design temperature of 650°F (343°C) because the heat produced by the hydrogen recombination process results in a normally elevated temperature of these components.

4a2.2.1.5 Off-Gas Formation

During target solution irradiation, noble gases are formed by fission and decay, hydrogen and oxygen are formed by radiolysis, and water vapor is formed by evaporation.

The hydrogen concentration in the TSV headspace is maintained below the lower flammability limit (LFL) by using air as a sweep gas to ventilate the headspace. After leaving the TSV headspace, the sweep gas is drawn through a silver-coated zeolite bed in a TOGS side stream to maintain iodine concentrations within the PSB gas space below the limits defined by the safety analysis. The hydrogen and oxygen are recombined using a catalytic recombiner before the sweep gas is circulated back to the TSV headspace.

Published experimental data has been used to determine radiolysis rates for uranyl sulfate systems undergoing fission, as well as the uncertainty in those rates. The formation rate of hydrogen and oxygen is up to approximately 71 standard cubic feet per hour (scfh) (33 standard liters per minute [slpm]) of 67 percent hydrogen and 33 percent oxygen. These values include margins for uncertainty.

Additional design margin is added to the most limiting expected radiolysis rate with added margin for uncertainty to establish the design hydrogen handling rate for TOGS. The TOGS is designed to accommodate a hydrogen generation rate of at least 53 scfh (25 slpm). This is equivalent to 0.30 pounds per hour (lb./hr) (3.8E-02 grams per second [g/s]).

The overall circulation rate of the TOGS is approximately [ ]$^{PROP/ECI}$ to normally maintain the hydrogen concentration below 2 percent by volume. The headspace fraction within the TSV when the target solution is present is between approximately 27 percent and 42 percent of the TSV volume depending on the target solution fill volume determined during the startup process.

The PSB is a closed system during irradiation, except for gas adjustments in TOGS for pressure and oxygen concentration control. Water is condensed by TOGS and retained within the PSB.

The bounding TSV evaporation rate was calculated to be 59 lb./hr (27 kilograms per hour [kg/hr]) by assuming the following conditions:

- TOGS sweep gas supply temperature to the TSV: 77°F (25°C)
- TOGS sweep gas supply flow rate to the TSV: [ ]PROP/ECI
- TOGS sweep gas supply relative humidity: 0 percent
- TSV target solution temperature: 194°F (90°C)
- TSV headspace pressure: 10 pounds per square inch absolute (psia) (70 kPa absolute)

The bounding steady-state condensate return rate to the TSV from the recombination of hydrogen and oxygen is approximately 2.7 lbm/hr (1.2 kg/hr).

A detailed description of the TOGS can be found in Section 4a2.8.

4a2.2.1.6 TSV Operating Conditions

The normal operating conditions of the target solution in the TSV are approximately 68°F to 140°F (20°C to 60°C) and approximately -1 pounds per square inch gauge (psig) (-10 kPa gauge). Section 4a2.8 provides a detailed description of the TOGS operating conditions. Operating specification limits of the target solution are provided in Table 4a2.2-2.

During startup, the TSV temperature is approximately the same temperature as the primary closed loop cooling system (PCLS) due to the small amount of decay heat generation in the target solution and the negligible fission power generated during startup. The TSV and target solution are approximately the same temperature as the outlet temperature of the PCLS, nominally 68°F (20°C). The temperature control of the PCLS outlet temperature is within +/- 9°F (5°C). Therefore, the temperature of the TSV is nominally 68°F +/- 9°F (20°C +/- 5°C).

There is no mechanical mixing in the TSV. The target solution is mixed using natural convection and bubbling during irradiation. The highest heat generation occurs near the center of the solution and the TSV walls are cooled by the PCLS, creating an upward target solution flow through the center of the TSV with downward target solution flow along the walls. Non-uniformities exist in the power distribution in the TSV, void fraction within the TSV, and temperatures within the TSV. There are no expected non-uniformities in the chemical species that significantly affect reactivity. The non-uniformities above do not affect the operating limits for the target solution.

The temperature of the target solution rises from room temperature (approximately 68°F [20°C]) to approximately 122°F (50°C) during full-power irradiation. The pressure in the headspace of the TSV ranges from -2 to 0 psig (-13.8 to 0 kPa gauge) and is regulated by TOGS.

Fission product precipitation out of the target solution is small, and bounding values are described in Table 4a2.2-1. The potential precipitation has an insignificant effect on reactivity in the TSV. This precipitation may be filtered out during processing in the molybdenum extraction and purification system (MEPS) by the frits and extraction media in the extraction column.

There are no significant pH changes expected during irradiation.

The bulk void fraction within the target solution is expected to be less than 5 percent. The target solution has a negative void coefficient and increases in void lead to lower power in the TSV.

Steady-state power density limits have been developed to prevent significant uranyl peroxide precipitation, and are described in detail in Subsection 1.1.3.5. [ ]PROP/ECI catalyst is used to prevent precipitation. It is required to be present at minimum levels based on the target solution pH, as discussed in Subsection 1.1.3.5. [ ]PROP/ECI

The equations defining the minimum [ ]PROP/ECI catalyst concentration and limiting power density are provided in Table 4a2.6-10.

4a2.2.1.7 Target Solution Operating Limits

The operating limits of the target solution are provided in Table 4a2.2-2.

4a2.2.1.8 Sampling and Testing

The volume, uranium concentration, and pH of the target solution are determined and adjusted through the target solution preparation system (TSPS). Fresh target solution batches and target solution used for batch adjustments are held in the target solution preparation tanks. Sampling and analysis of the target solution in the target solution hold tank verifies that the target solution is within specification. Sampling is performed after preparing a new batch and after making adjustments to an existing batch, prior to transferring the batch to the TSV. Operators make adjustments to the target solution to meet specifications, as necessary. Subsection 4b.4.2 provides a detailed description of the TSPS.

SCAS instrumentation measures the temperature of the target solution during irradiation to monitor operating conditions.

4a2.2.1.9 Chemical and Physical Changes in Target Solution

Physical changes in the target solution as the irradiation cycle proceeds are generally small. Table 4a2.2-2 provides a list of chemical property operating range limits of the target solution.

An individual irradiation cycle is nominally 5.5 days, although individual cycles up to 30 days are analyzed. The maximum expected target solution burnup is less than [ ]PROP/ECI, which would occur after approximately [ ]PROP/ECI of operation at maximum power with no target solution makeup. Some target solution makeup is expected to be required to counteract process losses. This makeup will blend fresh uranium with irradiated uranium, extending the irradiation time before the maximum burnup is reached. Short term chemical and physical property changes of the target solution are limited to temperature, concentration, and radiolysis gas release. There is a small buildup of fission and activation products in the target solution during irradiation. Calculations indicate that the reactivity effects from plutonium buildup are [ ]PROP/ECI, and fission product poisons have reactivity effects of up to [ ]PROP/ECI over the life of the solution, as described in Section 1.1.

There is no significant change related to pH expected in the target solution during irradiation. The temperature of the target solution rises from room temperature (approximately 68°F [20°C] to approximately 122°F [50°C]) during irradiation. The concentration of the target solution is slightly affected by the holdup of hydrogen, oxygen, and water in the TOGS during operation. The TOGS is designed for the holdup of water to be less than 3 liters, approximately [ ]PROP/ECI of

the nominal TSV fill volume. Hydrogen and oxygen gas is produced by radiolysis of the target solution during irradiation and is drawn into the TOGS to recombine the hydrogen and oxygen and return condensate back to the TSV to limit water loss during operation.

After a typical irradiation cycle, the target solution is sent to the molybdenum extraction and purification system (MEPS) for removal of medical isotopes. Following extraction, the target solution is routed to a target solution hold tank, where it is sampled and adjusted if necessary to ensure the target solution parameters are within operational limits. There are no known long term chemical or physical effects that are a significant detriment to the uranyl sulfate target solution when used within operating limits. This is supported by the Target Solution Qualification Program. Section 4b.4 provides additional discussion of the target solution adjustment in the target solution hold tanks.

4a2.2.1.10 TSV Physical Structure

The TSV is sized to allow for up to approximately [ ]PROP/ECI of target solution to be irradiated. Up to [ ]PROP/ECI are contained within the TSV dump lines during irradiation. The TSV inner shell radius is approximately [ ]PROP/ECI, the outer shell radius is approximately [ ]PROP/ECI, and the height of the target solution is between [ ]PROP/ECI. The TSV is designed to contain the target solution and fission products during irradiation.

The TSV is capable of withstanding the pressure excursions encountered during a credible deflagration of the radiolytic gases. This was determined by evaluating the possible modes of excess hydrogen production and TOGS failure. The limiting case is analyzed in Subsection 13a2.1.9. The calculated peak hydrogen concentration is below the detonation limit. The maximum pressure during a credible deflagration is less than 65 psia (450 kPa).

The TSV is constructed of 347 stainless steel, which is resistant to corrosion by uranyl sulfate solutions under irradiation and has been used as a reactor vessel material in historical aqueous homogeneous reactors (AHRs). The solution also comes in contact with other stainless steel piping and vessels. These are generally constructed from 347 stainless steel, but 304L and 316L are also used in some areas. Historical data and testing at Oak Ridge National Laboratory (ORNL) has shown the compatibility of the utilized stainless steel alloys with uranyl sulfate solutions.

The TSV is cooled through both shells, [

]PROP/ECI The cooling channels formed by the annular gaps between the neutron multiplier and the TSV inner shell, the TSV outer shell and the SASS shell, [ ]PROP/ECI are provided with forced cooling water by the PCLS to actively cool the TSV during normal operation.

Detailed material and structural information for the TSV and auxiliary components can be found in the other sections of this chapter. These subsections include discussions on dimensions, materials of construction, and special features (e.g., reflectors) that relate to safety and the

physical integrity of the TSV. Additional information about the TSV is also included in Section 4a2.4.

4a2.2.1.11 Physical Properties Significant to Safety

Physical properties significant to safety of the target solution include:

- Mass density (see Table 4a2.2-1)
- Power density (see Table 4a2.6-9)
- Temperature (see Table 4a2.2-1)
- pH (see Table 4a2.2-1)
- Pressure (see Subsection 4a2.2.1.6)
- Specific Heat (see Table 4a2.2-1)
- Gas evolution (see Subsection 4a2.2.1.5)
- Changes in void fraction (see Subsection 4a2.2.1.6)
- Precipitation of uranium or fission product complexes (see Subsection 4a2.7.7)
- Sweep gas (see Subsection 4a2.2.1.6)

4a2.2.1.12 Target Solution Preparation

Target solution is prepared through the dissolution of low-enriched uranium (LEU) (19.75 ± 0.2 percent U-235) oxide in small batches. The preparation of target solution is discussed in Section 4b.4.

4a2.2.1.13 Target Solution History

Concept designs of solution reactors utilizing uranyl sulfate as fuel were first proposed in the 1940s (IAEA, 2008). Both ORNL and Los Alamos National Laboratory (LANL) initiated research activities on uranyl sulfate during that period (Secoy, 1948; Baker, 1944). These national laboratory research activities on uranyl sulfate continued during the 1950s, (ORNL, 1952; Lee, 1952; Lane, 1958; Beall, 1954). Concurrent with the research performed at the national laboratories, uranyl sulfate research was performed at universities with research reactors (NCSU, 1955), Atomics International (Wilson, 1958), and elsewhere (Parkins, 1958; Secoy, 1955; Silverman, 1961; Gamble, 1959). Experience has demonstrated that uranyl sulfate can be used in fission systems successfully and safely. Research on uranyl sulfate as a fuel solution has since continued and supports the concept of using uranyl sulfate as a target solution for the SHINE facility.

The Target Solution Qualification Program contains historical target solution data, the means to produce the target solution, an overview of the processes to which the target solution is exposed, limits to ensure safe and reliable target solution performance, and the tests and experiments that will be and have been performed to validate the target solution characteristics.

4a2.2.1.14 Technical Specifications

Certain material in this subsection provides information that is used in the technical specifications. This includes limiting conditions for operation, setpoints, design features, and means for accomplishing surveillances. In addition, significant material is also applicable to, and may be used for the bases that are described in the technical specifications.

4a2.2.2 REACTIVITY CONTROL MECHANISMS

There are six principal variables affecting reactivity that are controlled by the SHINE design. Three, once established during filling of the TSV, are not significantly altered during IU operation:

- Uranium concentration in solution
- Uranium enrichment
- TSV fill volume

Three factors that are controlled to ensure that they remain stable during operational modes are:

- Neutron driver source strength
- Target solution headspace pressure
- PCLS cooling water supply temperature

Note that water holdup by TOGS affects reactivity but is not a controlled variable. The design of TOGS minimizes this reactivity effect to the extent practical.

A detailed discussion of the systems used to monitor reactivity is provided in Section 7.3 and Section 7.4.

During TSV operation, the TSV dump valves can be opened to gravity drain the entire contents of the TSV to the TSV dump tank. The TSV dump tank has been designed to be favorable geometry for the most reactive credible uranium concentrations, including various upset conditions, and has sufficient capacity to hold the entire contents of the target solution hold tank.

The concentration of uranium in solution is measured and independently verified to ensure that concentration values remain within the limits prescribed by SHINE. Uranium concentration is prepared and measured to ensure it is within 1 percent of desired concentration. Sampling is performed after preparation of a new batch and after making adjustments to an existing batch, prior to transferring the batch to the TSV. The SHINE system provides a predictable and precisely controlled system response as the TSV fill volume rises above a fill height of approximately [ ]$^{PROP/ECI}$. Target solution characteristics and allowable operating ranges are discussed in Subsection 4a2.2.1.

The uranium enrichment is verified when received, and no means are provided to increase the enrichment in the process design. The allowable operating ranges are identified in Subsection 4a2.2.1.

A number of design features are provided to establish TSV fill volumes:

- Fixed TSV configuration

  The volume and geometry of the TSV are known and fixed.

- Level instrumentation

  Instrumentation provides an inferred measurement of the TSV fill volume. Level will be correlated to volume and verified in startup testing.

- Vacuum lift tank transfer volume

  The TSV fill lift tank is used to transfer target solution from the target solution hold tank to the TSV. The solution is lifted into the TSV fill lift tank and then gravity drained into the TSV. This tank is sized for approximately [ ]PROP/ECI of target solution. The TSV fill lift tank volume, number of lifts, and line holdup data provides confirmation for the TSV level instrumentation.

  The elevations of the target solution hold tank and TSV dump tank are established in relation to the TSV to preclude the gravity transfer of target solution into the TSV (see Figure 4a2.2-1) from these tanks. Positive action by the operator and control systems is required to add target solution to the TSV. To allow the operation of the TSV fill lift tank, it is located at an elevation above that of the TSV. Upon completion of filling and mode transfer to irradiation mode, the TSV fill lift tank is drained back to the target solution hold tank.

- Reactivity measurements

  The neutron flux detectors are used to determine system reactivity during filling of the TSV. Flux values are compared to trip setpoints to verify technical specification limits on system reactivity parameters are not exceeded.

The design of the TOGS prevents pressurization of the target solution during normal operations. The TOGS maintains the pressure over the target solution negative with respect to atmospheric. The pressure over the target solution is controlled by the TOGS pressure regulation components that remove excess sweep gas from the gas space of the PSB and transfer this gas to a vacuum tank (see Figure 4a2.2-2). Details of the TOGS are provided in Section 4a2.8.

The liquid condensed by TOGS is returned to the TSV via gravity drains to minimize the change in uranium concentration.

The PCLS is monitored and controlled to ensure that the temperature remains stable within the established operating limits. The PCLS is used to remove approximately up to 580,000 British thermal units per hour (Btu/hr) (170 kilowatts [kW]) of heat from the TSV and neutron multiplier during full power irradiation.

In the event of a loss of PCLS active heat removal capacity due to loss of cooling water flow or increased cooling water supply temperature above acceptable limits, the TSV reactivity protection system (TRPS) initiates an IU Cell Safety Actuation, resulting in a dump of the target solution and de-energization of the NDAS high voltage power supply (HVPS). Decreased heat removal results in a reactivity decrease, along with a decrease of power in the target solution. PCLS temperature below acceptable limits also results in an IU Cell Safety Actuation. Details of the PCLS are provided in Section 5a2.2.

The large thermal mass of the light water pool ensures stable temperatures of the neutron reflector. Heat removal from the light water pool for steady-state operation is provided by contact with PCLS-cooled components within the pool. PCLS flow rates and PCLS heat exchanger outlet

temperatures are maintained within the normal design range during startup and irradiation modes of operation.

A detailed description of the TRPS is provided in Section 7.4.

4a2.2.2.1 Technical Specifications

Certain material in this section provides information that is used in the technical specifications. This includes limiting conditions for operation, setpoints, design features, and means for accomplishing surveillances. In addition, significant material is also applicable to, and may be used for the bases that are described in the technical specifications.

4a2.2.3 NEUTRON MODERATOR AND REFLECTOR

The light water pool, which surrounds the TSV, provides neutron moderation and reflection to reduce neutron leakage from the system. The materials of construction, geometry, and other design considerations for the light water pool are described in Section 4a2.4.

The neutron multiplier is a solid uranium annulus that serves to improve the neutron population in the TSV. The design features of the neutron multiplier are described in Subsection 4a2.2.6.

No additional neutron moderators or reflectors are included in the design.

4a2.2.3.1 Technical Specification

See Section 4a2.4 and Subsection 4a2.2.6 for a discussion of technical specifications associated with the light water pool and neutron multiplier, respectively.

4a2.2.4 SUBCRITICAL MULTIPLICATION SOURCE

The subcritical multiplication source is a fixed neutron source in the subcritical assembly that is used to facilitate the monitoring of the reactivity of the assembly when the neutron driver is not producing neutrons. This is a neutron source with an output several orders of magnitude less than the neutron driver that facilitates the performance of 1/M measurements during the startup process. It provides a stable level of background neutrons so that neutron multiplication in the subcritical assembly can be accurately and reliably measured while filling the TSV with target solution.

The neutron driver produces an excessively large neutron flux for startup measurements and does not have the desired degree of stability to produce the accuracy required.

4a2.2.4.1 Type of Nuclear Reaction

The neutron source material is americium-beryllium (Am-Be) or plutonium-beryllium (Pu-Be). Am-Be and Pu-Be emit neutrons through (alpha,neutron) reactions in the beryllium.

4a2.2.4.2 Energy Spectrum of Neutrons

The energy spectrum is provided in Table 4a2.2-3 for the neutron sources described in Subsection 4a2.2.4.1.

4a2.2.4.3 Source Strength

The source is required to provide greater than 5.0E+05 neutrons per second (n/s).

4a2.2.4.4 Interaction with the System

The placement of the source is inside of a stainless steel capsule that is located below the tritium target chamber. This capsule is accessible when the target chamber is removed and the source is able to be inserted and removed using long-handled tools.

4a2.2.4.5 Physical Environment

The nominal temperature of the cooling water surrounding the source is approximately 68°F (20°C). The neutron source will be exposed to external neutron radiation up to [ ]PROP/ECI and external gamma radiation up to [ ]PROP/ECI.

4a2.2.4.6 Verification of Integrity and Performance

Leak and contamination tests of the subcritical multiplication source are performed prior to use in the SHINE facility. Neutron strength measurements are made to ensure the stated activity prior to operation using the source.

4a2.2.4.7 Technical Specifications

There are no technical specifications applicable to the subcritical multiplication source.

4a2.2.5 SUBCRITICAL ASSEMBLY SUPPORT STRUCTURE

The TSV maintains the location and shape of the target solution during irradiation. The SASS positions the TSV relative to the neutron driver, neutron multiplier, subcritical multiplication source, and neutron flux detectors as shown in Figure 4a2.1-2. The SASS contains the TSV and supports TSV dump lines, TSV overflow lines, TOGS components, and associated instrumentation.

The SASS channels cooling water around the TSV and neutron multiplier. The PCLS is attached to the SASS upper and lower plenums. The PCLS forces cooling water to pass [ ]PROP/ECI along the TSV inner and outer shells, and around the neutron multiplier to remove heat from the TSV and neutron multiplier during operation.

The SASS and PSB components are designed to withstand the design basis loads, including thermal, seismic, and hydrodynamic loads imposed by the light water pool during a seismic event. Hydrodynamic loads to safety-related equipment submerged within the light water pools were applied considering hydrodynamic added mass and drag forces from sloshing pool water. These hydrodynamic loads were calculated using the maximum vertical displacement of sloshing pool water determined using the methods in Section 9 of ACI 350.3-06, Seismic Design of Liquid-Containing Concrete Structures and Commentary (ACI, 2006). In addition, the SASS and supported PSB components are designed to withstand normal operating loads imposed by the

primary cooling water and target solution, including hydraulic and thermal stresses. The entire subcritical assembly is submerged in the light water pool.

The SASS is supported on top of the TSV dump tank which is attached to the floor of the light water pool via seismic anchorages that establish the alignment of the SASS relative to the neutron driver. The SASS provides vertical and lateral support for the subcritical assembly components. Nozzle loads imposed on the SASS are accommodated by the design of the SASS, ensuring that stresses and displacements resulting from these loads do not result in stresses that exceed design allowables, or displacements that affect the function, or neutronics of the overall system.

The SASS is operated at a higher pressure than the TSV to minimize leakage of target solution into the PCLS in the event of a loss of TSV integrity. The SASS is designed for an internal pressure of 100 psi (689 kPa) to provide a defense-in-depth fission product boundary in the event of a TSV breach.

Surrounding the TSV, the SASS is exposed to neutron fluxes of up to approximately [ ]PROP/ECI. The SASS does not normally contact the target solution. In the event of a breach in the TSV, the SASS provides a defense-in-depth fission product boundary between the target solution and the light water pool.

The material of construction for the SASS is 304L stainless steel. The properties and behavior of 304L stainless steel in the expected neutron fluences are well-documented and are accounted for in the design of the SASS, ensuring its safe reliable operation over its 30 year design life. The highest fluence to the SASS occurs adjacent to the TSV and is up to approximately [ ]PROP/ECI. The fluence to the SASS was compared to literature data (Kangilaski, 1967), which indicates an increase in yield and ultimate tensile strength and a reduction in ductility of austenitic stainless steel. Literature (Kangilaski, 1967; Kangilaski, 1971) indicates that while irradiated austenitic stainless steel loses some ductility, it will remain ductile for temperatures greater than -58°F (-50°C) when exposed to applicable fluence.

Neutron flux detectors are supported using brackets attached to the SASS outer shell. These brackets serve to locate the flux detectors in a fixed location relative to the TSV, ensuring flux profiles are measured consistently. Flux detectors are positioned around the SASS at nominally 120 degree intervals.

4a2.2.5.1 Technical Specifications

There are no technical specifications applicable to the SASS.

4a2.2.6 NEUTRON MULTIPLIER

The neutron multiplier is an annulus (approximately [ ]PROP/ECI tall) of aluminum-clad uranium metal that serves to moderate and multiply the fast neutrons coming from the fusion reactions initiated by the neutron driver. The multiplier consists of natural uranium metal (uranium that has not been enriched or depleted in U-235) with a thickness of approximately [ ]PROP/ECI, clad in approximately [ ]PROP/ECI thick aluminum. The

design life of the neutron multiplier is 30 years, but it is designed to allow remote replacement should physical damage occur to it, or a distortion that is outside of acceptable limits.

The multiplier is manufactured by casting natural uranium metal sections, machining the sections, and then placing the sections in a machined cladding. During the casting, the natural uranium is alloyed with a small weight fraction of silicon to assist in obtaining small, randomly-oriented grains to help reduced irradiation-induced growth. The uranium is cast in two axial pieces, with one piece supported on top of the other piece when installed in the cladding. The cast uranium is machined to final dimensions, and then is inserted into the aluminum cladding. The aluminum cladding is type 6061 aluminum. The aluminum cladding is welded closed after the uranium core is inserted. [ ]PROP/ECI The cladding is leak-tested following fabrication.

The fast fusion neutrons that collide with the uranium metal can cause several high energy reactions to occur. The most common reactions in the multiplier include fission, and to a lesser extent (n,2n) and (n,3n) reactions with U-235 and U-238. The resulting spectrum of fast fission, fusion, epithermal, and thermal neutrons then enter the TSV.

The aluminum cladding contains fission products created within the uranium (the cladding thickness is much greater than the distance traveled by a fission fragment). In the event of a cladding failure, there are no consequences that would affect the safe operation and shutdown of the irradiation system. There is potential that the uranium metal could form surface oxidization, releasing hydrogen gas. [ ]PROP/ECI

A cladding failure could also result in fission products being released into the primary cooling water, leading to contamination in the PCLS. Sampling the PCLS detects such a breach via the increased radioactive contamination present in the water. Additionally, radiation monitors on the radiological ventilation zone 1 exhaust subsystem (RVZ1e) line ventilating the PCLS expansion tank can detect fission products leaving the PCLS cooling water. The TRPS initiates an IU Cell Safety Actuation if radiation levels exceed predetermined limits, resulting in the isolation of the PCLS supply and return lines and the RVZ1e IU cell line as described in Section 7.4.

Radiation damage and burnup are not expected to impact operation of the multiplier for the lifetime of the plant. The maximum fast neutron fluence (greater than approximately 100 thousand electron volts [keV]) of the multiplier over a 30 year period of continuous operation is calculated to be less than [ ]PROP/ECI. Nuclear parameters of the subcritical assembly at the end-of-life for the multiplier have been calculated and do not affect the safety of the subcritical assembly. Nuclear parameters are described in Section 1.1.

Bounding fission product gas generation for the lifetime of the multiplier has been incorporated into the design. [ ]PROP/ECI

Overall heat generation rate in the multiplier is approximately 15 kW (50,000 Btu/hr) during operation of the TSV at the licensed power limit. Heat generation in the multiplier is from fissions occurring within the multiplier and radiation absorbed from the fission process in the TSV. Most fission energy is short range (fission products, betas) and is deposited locally. Some energy from long range products (gammas and fast neutrons) is deposited in the multiplier, with the balance being deposited in structural materials, the TSV, and the cooling water. Heat deposited in the

Proprietary Information – Withheld from public disclosure under 10 CFR 2.390(a)(4)
Export Controlled Information – Withheld from public disclosure under 10 CFR 2.390(a)(3)

multiplier is removed by the PCLS. The temperature profiles through the multiplier at beginning and end-of-life are provided in Figure 4a2.2-3. [

]PROP/ECI

4a2.2.6.1 Technical Specifications

Certain material in this subsection provides information that is used in the technical specifications. This includes limiting conditions for operation, setpoints, design features, and means for accomplishing surveillances. In addition, significant material is also applicable to, and may be used for the bases that are described in the technical specifications.

Table 4a2.2-1 – Target Solution Chemical and Physical Properties

Property	Nominal Values
Chemical Composition	[ ]PROP/ECI of uranium with [ ]PROP/ECI sulfuric acid and [ ]PROP/ECI
Temperature	50 to 194°F (10 to 90°C)
Density	[ ]PROP/ECI
Specific Heat	[ ]PROP/ECI
Average Power Density	Up to [ ]PROP/ECI
Mass	[ ]PROP/ECI
Volume	[ ]PROP/ECI
Uranium Content	[ ]PROP/ECI uranyl sulfate ([ ]PROP/ECI uranium)
pH (at 20°C)	[ ]PROP/ECI
Initial Enrichment	19.75 ± 0.2 percent U-235
Fission Product Precipitates	Less than [ ]PROP/ECI

Table 4a2.2-2 – Target Solution Operating Limits

Operating Limit	Range/Value
Temperature	50 to 194°F (10 to 90°C)
Uranium Concentration	[ ]PROP/ECI
pH	[ ]PROP/ECI
Power Density	Per Table 4a2.6-9

Table 4a2.2-3 – Neutron Source Energy Spectra
(Sheet 1 of 2)

Energy [MeV]	Pu-Be Source - Probabilities	Am-Be Source - Probabilities
1.00E-09	0.00E+00	0.00E+00
2.15E-09	0.00E+00	0.00E+00
4.64E-09	0.00E+00	0.00E+00
1.00E-08	0.00E+00	0.00E+00
2.15E-08	8.08E-03	0.00E+00
4.64E-08	1.02E-02	0.00E+00
1.00E-07	1.31E-02	0.00E+00
2.15E-07	1.46E-02	0.00E+00
4.64E-07	1.38E-02	0.00E+00
1.00E-06	9.93E-03	0.00E+00
2.15E-06	7.63E-03	0.00E+00
4.64E-06	6.25E-03	0.00E+00
1.00E-05	4.87E-03	0.00E+00
2.15E-05	4.09E-03	0.00E+00
4.64E-05	2.65E-03	0.00E+00
1.00E-04	2.64E-03	0.00E+00
2.15E-04	2.06E-03	0.00E+00
4.64E-04	1.70E-03	0.00E+00
1.00E-03	1.38E-03	0.00E+00
2.15E-03	1.32E-03	0.00E+00
4.64E-03	1.27E-03	0.00E+00
1.00E-02	1.33E-03	0.00E+00
1.25E-02	1.45E-03	0.00E+00
1.58E-02	1.63E-03	0.00E+00
1.99E-02	1.64E-03	0.00E+00
2.51E-02	1.72E-03	0.00E+00
3.16E-02	1.88E-03	0.00E+00
3.98E-02	2.14E-03	0.00E+00
5.01E-02	2.32E-03	0.00E+00
6.30E-02	2.65E-03	0.00E+00
7.94E-02	3.38E-03	0.00E+00
1.00E-01	4.15E-03	0.00E+00

Table 4a2.2-3 – Neutron Source Energy Spectra
(Sheet 2 of 2)

Energy [MeV]	Pu-Be Source - Probabilities	Am-Be Source - Probabilities
1.25E-01	5.11E-03	1.66E-02
1.58E-01	6.42E-03	2.21E-02
1.99E-01	8.05E-03	2.87E-02
2.51E-01	1.02E-02	3.67E-02
3.16E-01	1.49E-02	4.65E-02
3.98E-01	1.60E-02	5.77E-02
5.01E-01	2.53E-02	7.06E-02
6.30E-01	3.52E-02	8.48E-02
7.94E-01	4.97E-02	9.61E-02
1.00E+00	7.87E-02	1.06E-01
1.25E+00	1.20E-01	1.18E-01
1.58E+00	1.22E-01	1.27E-01
1.99E+00	2.39E-01	1.81E-01
2.51E+00	4.06E-01	2.43E-01
3.16E+00	4.57E-01	4.21E-01
3.98E+00	6.83E-01	5.71E-01
5.01E+00	5.96E-01	6.86E-01
6.30E+00	5.67E-01	6.50E-01
7.94E+00	4.64E-01	5.78E-01
1.00E+01	5.20E-02	1.66E-01
1.58E+01	3.38E-03	1.72E-02
2.51E+01	3.38E-04	0.00E+00
3.98E+01	0.00E+00	0.00E+00
6.30E+01	0.00E+00	0.00E+00
1.00E+02	0.00E+00	0.00E+00
1.58E+02	0.00E+00	0.00E+00
2.51E+02	0.00E+00	0.00E+00
3.98E+02	0.00E+00	0.00E+00
6.30E+02	0.00E+00	0.00E+00

Figure 4a2.2-1 – Target Solution Tank Elevations

Figure 4a2.2-2 – Primary System Interfaces During Irradiation Unit Operation

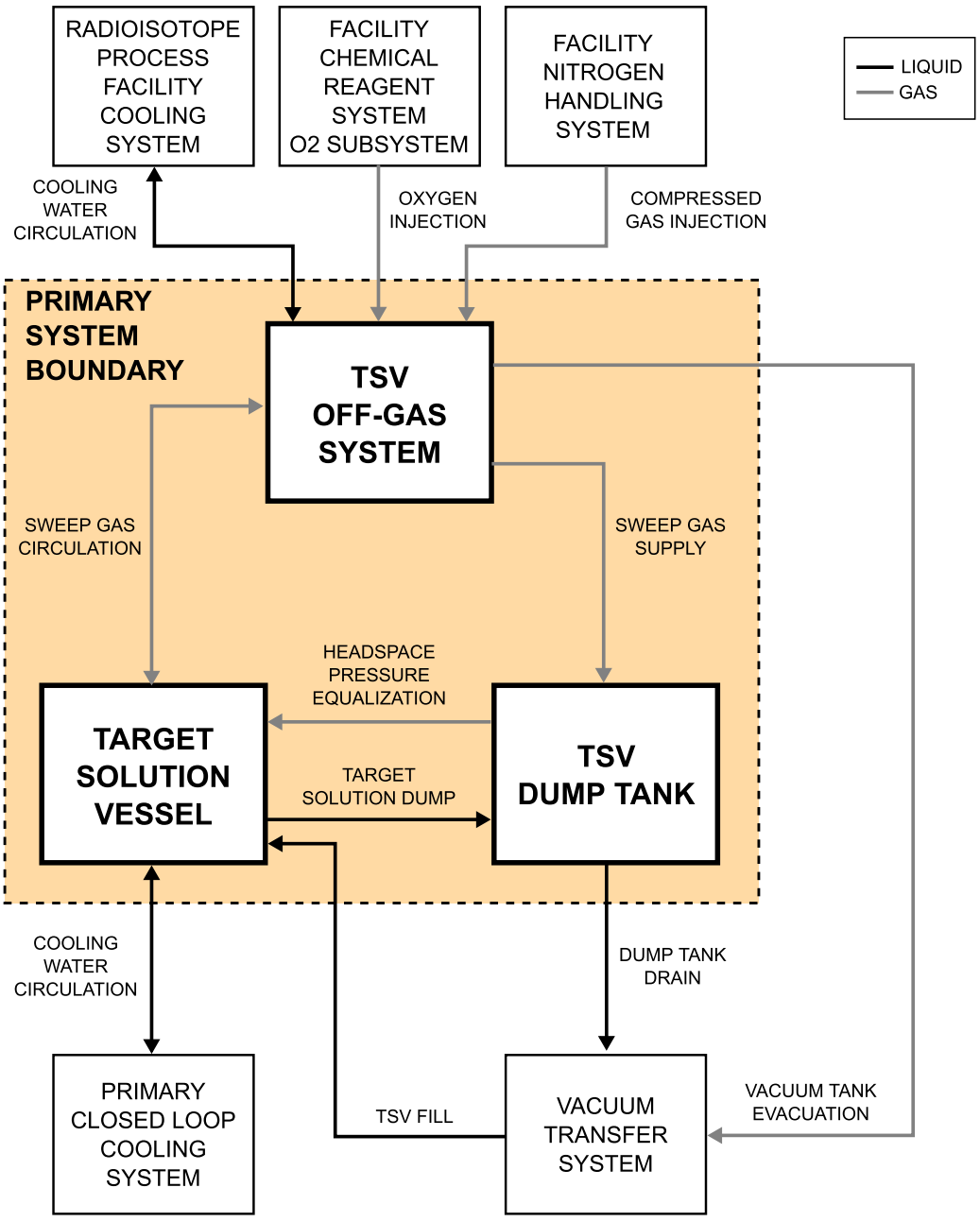

Figure 4a2.2-3 – Temperature Profiles of Multiplier at Beginning of Life (BOL) and End of Life (EOL)

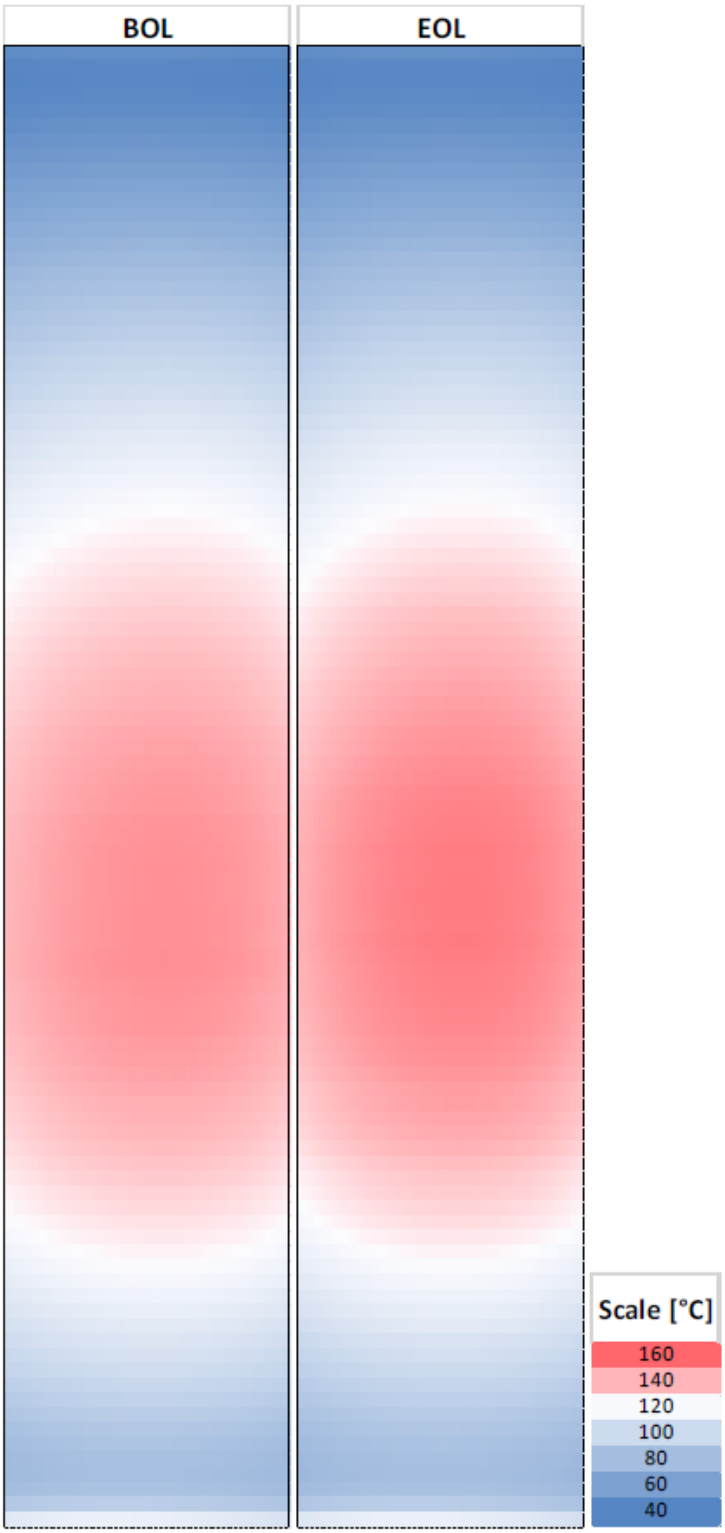

4a2.3 NEUTRON DRIVER ASSEMBLY SYSTEM

Within the irradiation facility (IF) there are eight neutron driver assembly systems (NDAS). The NDAS is the source of neutrons used to generate the neutron fluxes required to create medical isotopes in the target solution vessel (TSV) which holds the target solution during irradiation. In the IF, the eight NDAS units operate independently of each other.

The NDAS primary interfaces to the other IF structures, systems, and components (SSCs) include:

- The subcritical assembly system (SCAS) surrounds the NDAS target chamber. The neutrons produced by the NDAS in the target chamber irradiate the solution held by the SCAS. The SCAS is described in Section 4a2.2.
- The tritium purification system (TPS) processes mixed tritium and deuterium gas from the NDAS and returns purified tritium to the NDAS. The TPS also provides deuterium to the NDAS as well as cleanup of the NDAS secondary enclosure atmosphere. The TPS is described in Section 9a2.7.
- When necessary, the TSV reactivity protection system (TRPS) can initiate an IU Cell Safety Actuation, which de-energizes the NDAS. The TRPS is described in Section 7.4.

The NDAS produces neutrons by colliding a deuterium (D) ion beam with tritium (T) gas. D-T reactions have a lower energy threshold than any other neutron-producing, accelerator-driven reaction. D-T reactions also have a large cross section and therefore yield neutrons efficiently. Table 4a2.3-1 lists nominal design parameters for the NDAS. The NDAS is part of the tritium process boundary. In order to mitigate tritium leaks, NDAS components that contain tritium gas are designed for vacuum service and are maintained below atmospheric pressure. Component and system design requirements necessary to support vacuum service also inherently support tritium process boundary design objectives (see Section 9a2.7). The NDAS is designed to be able to be evacuated and flushed prior to maintenance operations that would open the tritium process boundary.

The design lifetime of NDAS components is at least [ ]^{PROP}. Neutron fluence on all portions of the NDAS above the light water pool is predicted to be [ ]$^{PROP/ECI}$. Because of this relatively low fluence, damage from radiation will not impact the NDAS internal structural components and tritium process boundary functions of NDAS components. See Subsection 4a2.3.6 for a discussion of the NDAS structural component safety support functions. Materials with low activation potential have been chosen for use in NDAS components consistent with their potential for exposure to neutron radiation, where practicable.

The NDAS is designed to allow for in-cell maintenance. It has also been designed to be lifted via a crane from the irradiation unit (IU) cell for installation and removal for major maintenance and replacement. Maintenance is performed consistent with the radiation protection controls described in Section 11.1.

Greater than 90 percent of the activity resulting from activation during irradiation operations is located beneath the pool surface. At the end of one irradiation cycle, the expected activity of the NDAS components is 146 Curies. After [ ]^{PROP} of operation, the expected activity of the NDAS components is 210 Curies, and after [ ]^{PROP}, the expected activity of NDAS components is 254 Curies.

The bulk of the NDAS resides above the subcritical assembly. In order to mitigate risk from the NDAS collapsing during a seismic event and damaging safety-related equipment, the neutron driver components in the IU cell are designed as Seismic Category II components.

NDAS units will be operated independently to fulfill SHINE production goals. The major equipment of the NDAS is discussed in two categories: the neutron driver and the neutron driver support equipment. The operational overview is discussed in Subsection 4a2.3.3.

4a2.3.1 NEUTRON DRIVER

The neutron driver subsystem consists of the components located within the IU cell. These components are functionally responsible for operation of the system as a source of high energy neutrons. When the system is operational, these components will not be accessible by personnel. General arrangement drawings of the NDAS and NDAS pumping stages are provided in Figures 4a2.3-1 and 4a2.3-2. Components of the neutron driver subsystem consist of:

1. Accelerator section

   The NDAS accelerator stage ionizes deuterium gas within a plasma chamber and then accelerates the ions with an electrostatic accelerator. A microwave source is used to create deuterium ions in the plasma chamber. The ionized deuterium passes through an extraction lens and it is accelerated by a static electric field into a drift tube to be transported to the target chamber. Not all deuterium that enters the plasma chamber is ionized, so there is an extraction pump that removes neutral gas from the extraction area. The accelerator stage is in a pressure vessel containing sulfur hexafluoride gas that serves as an insulating gas. Nominal pressure of the sulfur hexafluoride is 45 pounds per square inch absolute (psia) (210 kilopascal [kPa]) and the nominal mass of sulfur hexafluoride is 77 kilograms (kg). Dimensions of the accelerator stage are approximately 7 feet (ft.) (2 meters [m]) square by 7 ft. (2 m) tall.

2. Pumping stages

   The accelerator pumping stage contains a series of turbomolecular pump stages that extract neutral gas that escapes the target chamber and blowers that return escaped gas to the target chamber. Each stage of the pumping section may have multiple turbomolecular pumps running to maintain the required level of vacuum. Vacuum apertures between pumping stages are used to maintain the drift tube at high vacuum so the ion beam can travel to the target chamber. The pumping equipment is designed for high levels of vacuum and inherently provides a robust tritium process barrier. The pumping stages are approximately 12 ft. (4 m) by 9 ft. (3 m) by 9 ft. (3 m) high and are supported by the IU cell support beams.

3. Target section

   The target stage of the NDAS holds the target chamber where the majority of deuterium-tritium fusion occurs. A solenoid magnet ahead of the target chamber focuses the ion beam through a vacuum aperture into the target, where the accelerated deuterium ions impinge upon the neutral deuterium and tritium atoms within the target chamber to initiate fusion.

Heat is generated in the target chamber during accelerator operation. Total target chamber heat produced is less than [ ]PROP/ECI. Cooling is provided by the NDAS cooling cabinet. A jacket around the target chamber allows the NDAS to flow cooling water around the target.

The target stage is connected to the SCAS by a flange, which provides structural support of the target stage. The target stage requires low leakage to support the required levels of vacuum to operate the NDAS, which also provides a robust tritium process barrier. The target stage is partially submerged in the light water pool and is approximately 11 ft. (3.5 m) long.

4a2.3.2 NEUTRON DRIVER SUPPORT EQUIPMENT

The neutron driver support equipment interfaces directly with the neutron driver to provide the necessary services and utilities for proper system function. These components are located outside of the IU cell and may be accessed, maintained, replaced or repaired as needed. These components consist of:

1. High voltage power supply (HVPS)

   The HVPS is a low stored energy, high voltage oil-immersed power supply. weighing less than 8400 lbs (3800 kg). and measuring approximately 5 ft. (1.5 m) wide by 7 ft. (2.1 m) deep and 6 ft. (1.8 m) tall. The HVPS is considered in the facility fire hazard analysis (FHA) discussed in Section 9a2.3. The HVPS operates nominally at 300 kilovolts (kV).

2. Cooling cabinet

   The cooling cabinet contains the major components of the NDAS closed loop water cooling system. The radioisotope process facility cooling system (RPCS) provides a source of chilled water for the cooling cabinet. The NDAS cooling loops are isolated from the RPCS by heat exchangers.

3. Control cabinets

   The control cabinets contain electrical power distribution equipment, signal equipment, and logic controllers. The control cabinets interface with the normal electrical power supply system (NPSS) for electrical power and PICS for control.

4a2.3.3 OPERATION OVERVIEW

The NDAS is a linear electrostatic accelerator that ionizes deuterium gas by electron cyclotron resonance (ECR) within a plasma chamber. The ECR source is powered by a motor-generator set and is located within a pressurized vessel containing sulfur hexafluoride as an insulator. The generated deuterium ions are extracted from the plasma chamber and accelerated by a static electric field (nominally 300 kV) into a drift tube to be transported through a series of vacuum apertures which allow differential pumping from a region of high vacuum (approximately [ ]PROP/ECI), to the target chamber which is filled with a nominal mixture of [ ]PROP/ECI by volume during irradiation operations.

As the ion beam is accelerated, its initial divergence and any space charge forces cause it to grow in radius. The ion beam is focused by solenoid electromagnets, which focus the expanding ion beam through the differential pumping stages into the aperture of the target chamber. If the focus elements failed to operate properly, the ion beam size change would cause the neutron yield to drop. If the focus elements failed and caused the ion-beam to diverge or misalign from the target chamber, the ion-beam divergence would cause the neutron yield to drop.

The target gas within the chamber is maintained at low vacuum to provide proper target atom density. The accelerated deuterium ions impinge upon the neutral deuterium and tritium atoms within the target chamber to initiate fusion. Each D-T fusion reaction produces a single high energy neutron (approximately 14.1 million electron volt [MeV]) and a single high energy alpha particle (approximately 3.5 MeV). The neutrons produced radiate outward, with most entering the SCAS. To maintain the high vacuum differential between the accelerator and the target chamber, neutral gas which escapes the target chamber is extracted from the drift tube by a configuration of blowers and turbomolecular pumps. The extracted neutral target gas is then exhausted from the blowers back into the target chamber.

The neutron driver is supplied with high voltage from the remotely placed HVPS. Subsystems of the neutron driver are controlled and powered by the control cabinets. Cooling for the ion source, solenoid magnets, turbo pumps, blowers, and target chamber is accomplished by circulating deionized cooling water from the cooling cabinet. Operators interface with the neutron driver from the control room, and maintenance access is possible using a maintenance control station. Target gas and ion source gas are provided by the TPS which also controls the target gas purity and composition. See Subsection 9a2.7.1 for more details on TPS.

4a2.3.4 CONTROL SYSTEM

The NDAS operates with an internal control system that operates each of the subsystems of NDAS. The NDAS responds to the control signals from the facility PICS to start and stop the neutron generation. Typical NDAS operational conditions include:

1. System Off;
2. Vacuum;
3. Standby; and
4. Beam On.

During System Off, all systems except the control system are de-energized. During Vacuum, the NDAS is at its operating vacuum levels but beam focusing and steering magnets are de-energized. During Standby, all systems are operational and steady state, high voltage lines are de-energized. During Beam On, the neutron driver is fully operational.

The NDAS neutron yield is normally maintained within 10 percent stability during the irradiation cycle. However, the neutron yield can temporarily decrease to 0 percent, or to any fraction of full output, due to electrical, beam focusing, or other temporary issues in the NDAS. Beam interruptions are considered normal behavior of accelerator technology, and the NDAS control system includes automatic recovery functions. TRPS limits the duration that the NDAS control system can attempt recovery before it is required to ramp up to full source strength using a method similar to startup (see Subsection 7.4.3.1.4). If a trip condition is reached, the NDAS terminates neutron production within one second. NDAS operational variations are considered in

the calculation of TSV operating characteristics and are described in detail in Subsection 1.1.1.2. NDAS operational variations and TSV power response is described in Subsection 13a2.1.8.

4a2.3.5 TRITIUM DESIGN

The maximum tritium inventory of an individual neutron driver is [ ]PROP/ECI during operation. Target gas and ion source gas are provided by the TPS which also controls the target gas purity and composition. The TPS supplies target gas at up to approximately [ ]PROP/ECI per accelerator, and exhausts mixed tritium and deuterium gas from the accelerator at up to approximately [ ]PROP/ECI per accelerator.

NDAS components that contain tritium gas are designed for vacuum service and are maintained below atmospheric pressure. Components and system design requirements necessary to support vacuum service also inherently support tritium process boundary design objectives.

The NDAS is designed so that no single active failure can result in an uncontrolled release of tritium.

The NDAS detects abnormal in-leakage in the components and subsystems containing tritium gas. Facility operators are alerted upon detection of abnormal tritium process boundary leakage.

The engineered safety features actuation system (ESFAS) monitors the target chamber supply pressure and target chamber exhaust pressure within the TPS to protect against a break in the tritium boundary. A pressure above 8 psia would indicate a break in the system and the ESFAS would initiate the appropriate TPS Train Isolation, which then initiates IU Cell TPS Actuations in TRPS for the appropriate IU cells. Additional information on the ESFAS and TRPS controls can be found in Sections 7.4 and 7.5. Evaluation of accidents involving releases of tritium from the neutron driver is discussed in Subsection 13a2.2.12.

4a2.3.6 SEISMIC DESIGN

Structural support beams support the neutron driver in the IU cell, with components installed above and adjacent to safety-related equipment. Neutron driver components within the IU cell are classified as a Seismic Category II component. The neutron driver structure is designed to maintain structural integrity during and following a design basis seismic event, preventing damage to the IU cell safety-related equipment from the neutron driver due to the event. The NDAS cooling water loop isolation valves and piping between the valves and the primary confinement boundary are classified as Seismic Category I components. The cooling water loop isolation valves and piping between the valves and the primary confinement boundary are designed to maintain confinement boundary integrity during and following a design basis seismic event. Seismic qualification of the NDAS is consistent with the methods described in Subsection 3.4.3.

The target stage of the accelerator is connected to the subcritical assembly support structure (SASS) via a flange. This allows proper positioning of the target chamber in relation to the SCAS. The forces that the target stage would apply to the SASS during the design basis earthquake are incorporated into the design of the SASS.

4a2.3.7 TARGET CHAMBER

The target chamber vessel is fabricated from austenitic stainless steel, and is filled with low-pressure ([ ]PROP/ECI) tritium and deuterium. The target chamber central axis is in the center of the IU cell. When the accelerated deuterium ions interact with the tritium gas in the target chamber, many atomic and nuclear interactions occur in the target chamber. One of the interactions is the D-T fusion nuclear reaction, which generates 14 MeV neutrons. The target chamber generates up to 1.5E+14 neutrons per second (n/s) during operation. The number of neutrons generated per second is correlated to subcritical assembly fission power. TSV kinetic behavior, including interactions with the number of neutrons generated by the NDAS, is described in detail in Subsection 1.1.1.4.

The TPS provides the deuterium and tritium used in the target chamber, as controlled by PICS. See Subsection 7.3.1.1 for discussion of PICS controls.

[ ]PROP/ECI This results in a reduced neutron yield in order to ramp up power in the TSV, which creates heat, void, and negative reactivity feedback. Should unexpected tritium concentrations result in high fluxes in the TSV, the TRPS will protect the TSV through high flux trips.

Atomic reactions between the beam and the gas cause most of the beam to be stopped before reaching the bottom of the target chamber. Heat removal from the target is accomplished through a cooling water jacket around the target chamber. Because most of the beam stops in the gas during normal operation, inadvertent increases in target chamber pressure have insignificant effects on neutron yield. Inadvertent decreases in target chamber pressure results in lower neutron yield and may cause a larger fraction of the beam to strike the bottom of the target chamber. Therefore, the bottom surface is also water-cooled during operation.

The target chamber is surrounded by the subcritical assembly and is exposed to high neutron flux levels. The materials and design for the target chamber are selected to minimize tritium permeation, handle corrosion and damage due to the high neutron flux levels, for compatibility with the cooling water, and for compatibility with the subcritical assembly materials.

4a2.3.8 PROCESS CONTROL REQUIREMENTS

The PICS interfaces with the NDAS control system to start or stop the driver. Operators interface with the neutron driver from the control room using PICS, and maintenance access is possible using the maintenance operator interface. Target gas and ion source gas are provided by the TPS, which also controls the target gas purity and composition. See Subsection 7.3.1.1 for a discussion of PICS control over the NDAS.

In the event of a trip condition detected by TRPS (such as high neutron flux in the TSV), an IU Cell Safety Actuation is initiated, tripping the safety-related breakers that feed the HVPS. This isolates power to the HVPS, preventing ion acceleration, and therefore, neutron production by NDAS. See Subsection 7.4.3.1 for a discussion of TRPS safety functions.

4a2.3.9 TECHNICAL SPECIFICATIONS

Certain material in this section provides information that is used in the technical specifications. This includes limiting conditions for operation, setpoints, design features, and means for accomplishing surveillances. In addition, significant material is also applicable to, and may be used for the bases that are described in the technical specifications.

Table 4a2.3-1 – Neutron Driver Nominal Design Parameters

Condition	Operating Range
Neutron Output	Up to 1.5E+14 n/s
High voltage power supply voltage rating	Up to approximately 320 kV
Shutdown Command	< 1 second; neutron driver assembly system stops neutron production in less than one second in response to a shutdown command

Figure 4a2.3-1 – Neutron Driver Assembly General Arrangement (Not to Scale)

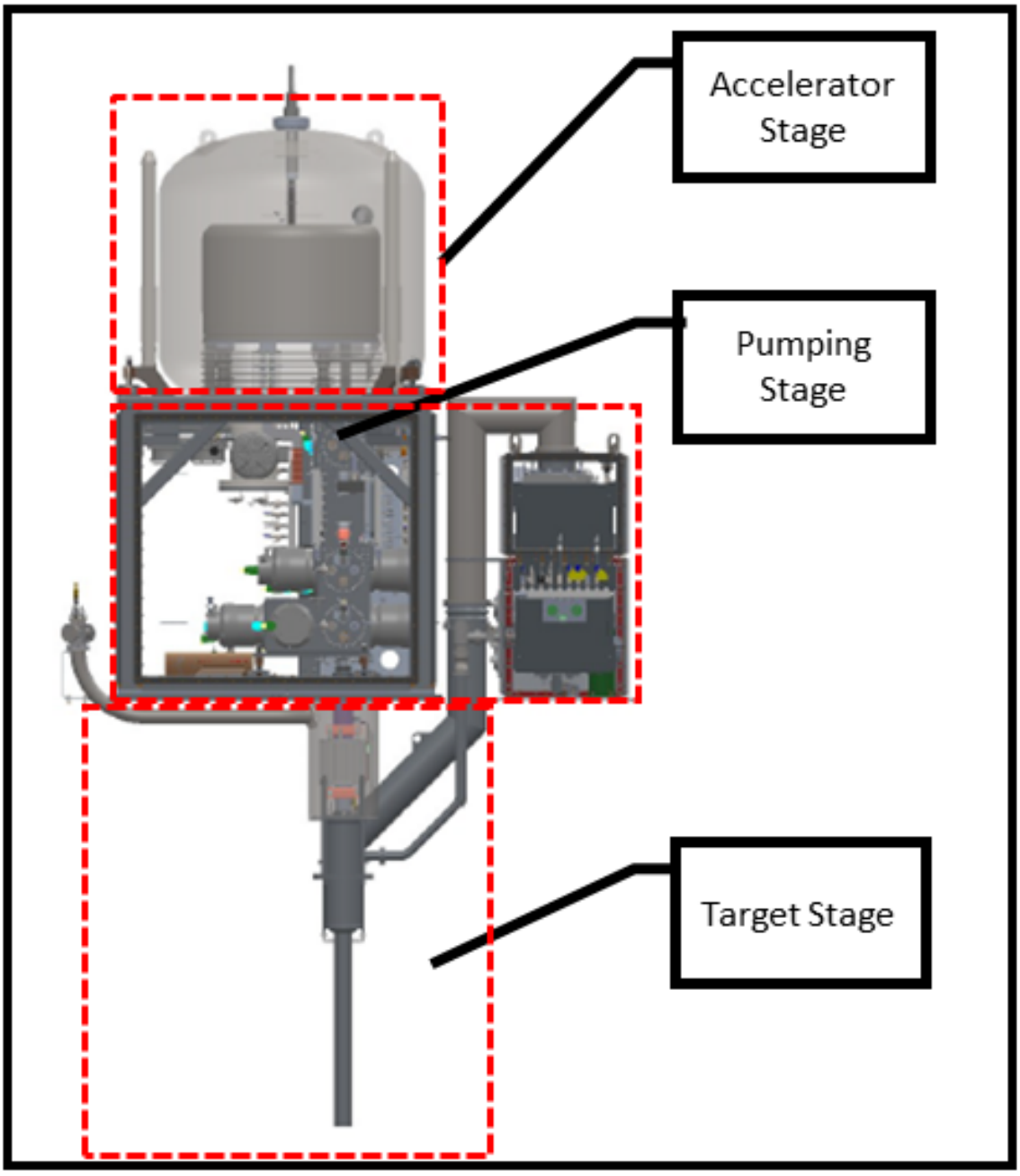

Figure 4a2.3-2 – Neutron Driver Assembly Differential Pumping General Arrangement (Not to Scale)

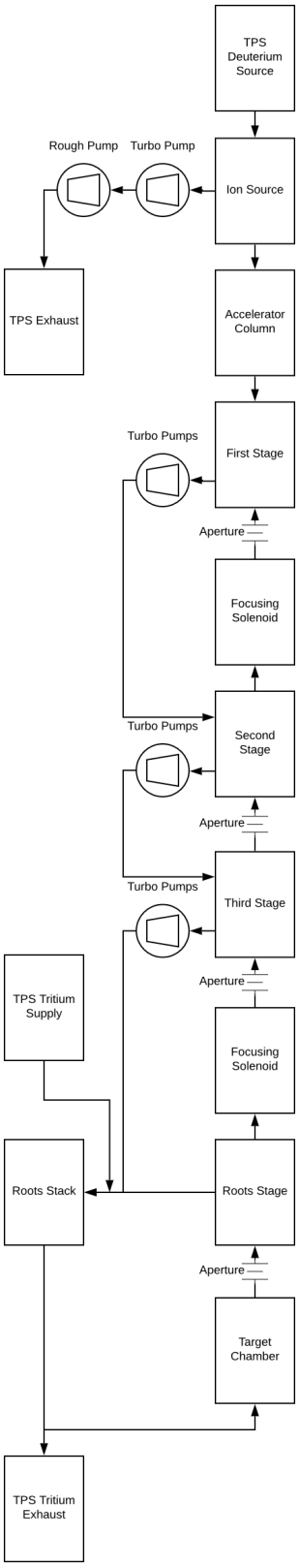

4a2.4 TARGET SOLUTION VESSEL AND LIGHT WATER POOL

This section presents information about the target solution vessel (TSV) and light water pool necessary to demonstrate their integrity. The TSV is part of the primary system boundary (PSB), which consists primarily of the TSV, TSV dump tank, and TSV off-gas system (TOGS).

4a2.4.1 TARGET SOLUTION VESSEL

The following subsections provide an overview of the TSV design characteristics, key functions, interfaces, and environment to which the TSV is exposed during operation (see additional details, including figures, in Section 4a2.1 and Section 4a2.2).

4a2.4.1.1 Design Considerations

The TSV is one of the four main components of the subcritical assembly (along with the neutron multiplier, subcritical assembly support structure (SASS), and TSV dump tank [see Figure 4a2.1-2]). The TSV is designed and fabricated in accordance with the American Society of Mechanical Engineers (ASME) Boiler and Pressure Vessel Code (BPVC), Section VIII, Division 1 (ASME, 2010).

The TSV provides structural integrity for maintaining the correct target geometry during operation. The TSV is designed to withstand loadings resulting from normal conditions and from postulated accident conditions. The loadings considered in the design of the TSV include those from:

- Internal pressure resulting from the process conditions
- External pressure from the primary closed loop cooling system (PCLS) cooling water
- Weight of the TSV and the contents of the TSV
- Reactions from attached equipment such as piping
- Attachment of internals and supports
- Cyclic reactions due to pressure and thermal variations
- Seismic reactions
- Hydrodynamic loads
- Temperature gradients and thermal expansion
- Abnormal pressures, such as those caused by hydrogen deflagrations
- Test pressures and coincident static head acting during the test

The intent of the ASME code is to establish rules of safety, relating only to pressure integrity. These rules do not cover deterioration in service as a result of radiation effects and corrosion.

Radiation effects and corrosion testing has been performed at Oak Ridge National Laboratory (ORNL) to determine the characteristics of stainless steel for TSV relevant conditions. The results of the radiation effects testing, corrosion testing, and literature data were used as input for the final TSV design.

During normal operation, there is approximately [ ]$^{PROP/ECI}$ of gas space above the uranium solution in the TSV. The gas space is connected to TOGS which continuously sweeps the headspace in order to reduce the potential for the development of explosive concentrations of radiolytic gases by limiting the hydrogen gas (H_2)

concentration to less than the lower flammability limit (LFL) (see Section 4a2.8 for a detailed description of the TOGS).

The average operating temperature in the TSV is expected to remain below 176°F (80°C). The TSV gas space and off-gas system are also held at a negative pressure (a few feet of water column). Operating specification limits of the target solution are discussed in Section 4a2.2.

There is no mechanical mixing in the TSV. The target solution is mixed using natural convection during irradiation due to internally-produced fission heat and radiolytic gas bubble formation.

Section 4a2.2 describes potential fission product precipitate quantities forming in the target solution. Section 1.1 describes controls on power density to prevent uranyl peroxide formation. Plating out of chemicals on the TSV surfaces is not expected. Potential precipitates are not expected to have significant effects on heat transfer in the TSV. Given the limited quantities and limited effects of the precipitates, no adverse effects are anticipated on the pressure vessel integrity.

The instrumentation monitoring the TSV has several connections to the TSV reactivity protection system (TRPS) and the control room. The subcritical assembly instrumentation provides information to the TRPS (such as neutron flux, cooling water flow rate, and cooling water temperature), which are used to de-energize (open) the TSV dump valves when safety parameters are exceeded, as described in Section 7.4. Pressure in the TSV is monitored to assess the status of the TOGS, and to indicate possible pressure fluctuations due to power oscillations.

4a2.4.1.2 Design and Dimensions

The TSV has an internal height of approximately [ ]PROP/ECI and a target solution thickness of about [ ]PROP/ECI. The TSV is filled to a height of approximately [ ]PROP/ECI at cold shutdown conditions. The wall thickness of the TSV varies within the range of [ ]PROP/ECI, depending on the location and feature.

4a2.4.1.3 Design Description of Materials and Supporting Structures

The TSV is constructed of 347 stainless steel, which has been shown to have high corrosion resistance in SHINE target solution environments and offer acceptable nuclear performance.

The TSV is supported in the light water pool by the SASS. The neutron driver is mounted directly overhead, extending down to the tritium target chamber which is located in the center of the subcritical assembly. The neutron multiplier inner shell is adjacent to the tritium target chamber as shown in Figure 4a2.1-2. Subsection 4a2.2.5 provides a detailed description of the SASS. The SASS is designed to withstand the environment of the irradiation process and the design basis accidents:

- The SASS is designed to withstand the design basis loads, including thermal, seismic, and hydrodynamic loads imposed by the light water pool during a seismic event.
- The material of construction for the SASS is 304L stainless steel. The material of construction for the associated fixtures used to locate the neutron flux monitors is

aluminum. Properties and behavior of these materials under neutron exposure and in contact with deionized water have been extensively analyzed.

- In the event of a breach of the TSV, the SASS and PCLS provide a boundary between the target solution and the light water pool. In addition, the SASS is designed to withstand credible pressure loadings due to the maximum credible hydrogen deflagration.

4a2.4.1.4 Location of Penetrations

The pool surface is nominally 5.3 ft. (1.6 m) above the top of the TSV.

The TSV is cooled through both shells, [

]PROP/ECI the shells of the TSV are convectively cooled via the PCLS. Forced convection is utilized during normal operation to maximize heat removal from the TSV and maintain the target solution below the operating condition limits specified in Subsection 4a2.2.1.

In addition to the [ ]PROP/ECI, the TSV contains two nominal pipe size (NPS) [ ]PROP/ECI drain nozzles for interconnection to the TSV dump tank. The TSV also has two connections to solution overflow lines, four TOGS supply/return connections, three thermowells, two inspection openings, two condensate return connections, and two spare irradiation sleeves that pass through the TSV but do not communicate with the interior. Solution addition is accomplished through a small diameter fill line connected to the TSV dump lines upstream of the TSV dump valves. The high hydraulic resistance of the fill valves and fill line limits the maximum solution fill rate for reactivity control purposes.

The [

]PROP/ECI. The drain nozzles are welded to the bottom head of the TSV. The overflow lines are welded to the bottom head of the TSV where they penetrate the vessel. Internal to the TSV, the overflow lines consist of a standpipe approximately [ ]PROP/ECI tall, which prevents inadvertent overfilling of the TSV.

The PCLS is an active coolant system designed to remove excess heat from the TSV during irradiation unit (IU) operation. PCLS cooling water is not required for target solution cooling post-shutdown. Adequate removal of decay heat from the dump tank is accomplished after loss of forced convection through natural convection and conduction to the light water pool.

4a2.4.1.5 Chemical Interactions and Neutron Damage

The TSV is exposed to total neutron fluxes up to [ ]PROP/ECI during irradiation, and is in direct contact with the uranyl sulfate target solution during operation and credible operational accidents. Based on the use of 347 stainless steel for the TSV construction:

- No significant chemical damage to the inner surface of the TSV is expected, and a coating on that surface is not required.

- The neutron fluence effects were determined at various locations of the TSV and evaluated for the projected life of the TSV. The steel will retain adequate strength and toughness properties for the lifetime neutron fluences.

The PCLS and SASS provide an additional barrier to fission product release in the event of a TSV breach, as shown in Figure 4a2.1-2. The closed loop design of the PCLS prevents commingling of the PCLS coolant with the water in the light water pool. The PCLS is operated at a higher pressure than the TSV, and normally prevents leakage of the target solution to the PCLS in the event of a breach. In the event of pressurization of the PSB due to an accident condition (such as hydrogen deflagration), leakage from the TSV would be contained within the PCLS. The PCLS is designed to withstand credible pressurized loadings due to a failure of the TSV during an accident. A detailed description of the PCLS is provided in Section 5a2.2.

Leakage of very small quantities of target solution is detected by periodic sampling of PCLS and light water pool water.

Significant leakage of PSB components outside of the SASS would result in contamination within the light water pool and atmosphere above the pool. Contamination would be controlled by the primary confinement boundary.

In the event of a significant breach of the TSV, which would be indicated by significantly lower flux levels, an uncharacteristic rise in TSV dump tank level, or detection of high radiation in the PCLS, the target solution is transferred to the favorable geometry TSV dump tank to minimize the activity lost to the systems surrounding the TSV.

In the event of a significant breach of the PSB causing leakage into the TSV dump tank, the low-high TSV dump tank level signal or high-high TSV dump tank level signal would cause the TRPS to initiate an IU Cell Safety Actuation and an IU Cell Nitrogen Purge to isolate the primary confinement boundary and provide combustible gas management.

The TSV, TSV dump tank, TOGS, and associated components act as the PSB and are safety-related. Surveillance and inspection capabilities for these structures, systems, and components (SSCs) are provided in order to assess mechanical integrity and verify corrosion rates are acceptable. The surveillance and inspection program ensures the integrity of the PSB components is not degraded below acceptable limits due to radiation damage, chemical damage, erosion, pressure pulses, or other deterioration.

The PSB components are inspected per the following requirements:

- Periodic visual inspection of the representative portions of the TSV interior surfaces, such as weld locations, the liquid level line, and piping connections. Access for the inspections is provided by openings in the TSV.
- Periodic visual inspection of the representative portions of the TSV dump tank interior surfaces, such as weld locations, the liquid level line, and piping connections. Access for the inspections is provided by openings in the TSV dump tank.
- Periodic internal visual inspection of the TOGS key components. Access for the inspections is provided by openings in the TOGS.
- Periodic external visual inspections of the TOGS components. The TOGS is designed with sufficient space between components to allow external visual inspection.

- Test coupons are located inside the TSV to verify the corrosion rate and material mechanical properties are acceptable. The test coupons are removable through an inspection opening.

4a2.4.2 LIGHT WATER POOL

4a2.4.2.1 Design of Light Water Pool

The light water pool is a concrete structure, lined with stainless steel, which is designed to withstand design basis events without the loss of liner integrity that could compromise the water retention capability of the liner. The pool is approximately 13.5 ft. x 13.5 ft. x 15 ft. deep (4.1 m x 4.1 m x 4.6 m deep). The pool volume is approximately 19,000 gallons (gal.) (72,000 liters [l]) of water. The concrete structure forming the pool and the pool liner are designed as Seismic Category I and remain functional after the design basis earthquake.

The light water pool is designed to mitigate the potential for leakage. The light water pool liner is formed by stainless steel plates welded to embed plates installed flush with the walls and floor of the concrete structure. The embed plates are attached to the concrete by concrete anchors and are supported by the safety-related reinforced concrete structure. The safety-related concrete structure provides a rigid structural support for the liner during normal operation and seismic events to minimize potential stress on the liner. The stainless steel liner is closely inspected and monitored during fabrication and installation. The fabrication of the liner includes inspection to ensure the welds are relatively smooth and free of significant pits and crevices where accumulation of fission or activation products could occur. Liner welds are inspected to ensure leak-tightness of the light water pool and liner materials are selected for corrosion resistance. There are no identified failure mechanisms that would degrade the liner welds as there is no significant thermal cycling/fatigue, corrosion, or pressure that could initiate a leak. Based on these design features, leakage to the environment is not expected.

The light water pool has minimum acceptable water levels that are assumed for safety analysis accident scenarios for normal operation and for loss of cooling conditions. The minimum acceptable water levels for normal operation provides adequate radiological shielding and equipment cooling for TSV operation at the licensed power limit. The minimum acceptable water level for loss of cooling conditions allows for adequate heat removal from the target solution after the loss of forced cooling. Piping penetrations through the light water pool liner are either above the minimum acceptable water level in the pool or a specific evaluation is performed to determine the potential for loss of pool water through the penetration. Piping penetrations into the light water pool with the potential for siphoning below the minimum acceptable water level contain anti-siphon devices or other means to prevent inadvertent loss of pool water.

Under normal operating conditions, the target solution does not come in contact with the light water pool or the light water pool steel liner. The target solution is located inside the PSB, which consists primarily of the TSV, the TOGS, and the TSV dump tank. As described in Subsection 4a2.2.1.4, the PSB components are designed to be compatible with the target solution to avoid excessive corrosion and other unwanted metallurgical effects that could lead to the PSB being compromised. Additionally, the TSV is located within the SASS pressure boundary. The SASS, along with the PCLS, provides another barrier between the target solution and the light water pool should a leak in the TSV develop. The closed loop design of the PCLS prevents the commingling of the PCLS coolant with the water in the light water pool.

In the event of a breach in which the target solution leaks into the light water pool, the IU cell where the leak is occurring would be shut down. The stainless steel liner of the pool is designed to withstand the chemical environment of the target solution. Contaminated pool water exceeding the cleanup capacity of the LWPS ion exchange beds would be processed by grouting and disposal as low-level radioactive waste. The IU cell would then be decontaminated by wash downs or other suitable means.

The primary functions of the light water pool are to: (1) remove heat, and (2) provide radiological shielding. These functions are described in the following subsections along with the related instrumentation.

4a2.4.2.2 Heat Removal

During normal operation, the light water pool absorbs a small portion of fission power from the TSV and neutron multiplier due to gamma and neutron energy deposition in the pool. The light water pool is not in direct contact with the target solution vessel or neutron multiplier. The light water pool is in contact with the target chamber assembly for the neutron driver; however, the target chamber itself is within the SASS pressure boundary and cooling for the target chamber is provided by a cooling water jacket integral to the target chamber. The light water pool also provides cooling for equipment located in the light water pool, including solenoid valves.

The light water pool absorbs the radiation heating and the heat generated by equipment in the pool, and rejects the heat to the PCLS equipment within the pool by natural convection. Up to 5.5 kilowatts (kW) (19,000 British thermal units per hour [Btu/hr]) of heat is absorbed by the light water pool during TSV operation at the licensed power limit of 125 kW (426,000 Btu/hr). The light water pool temperature remains below 95°F (35°C) during steady state operation, and up to 8 kW (20,000 Btu/hr) of heat is rejected to the concrete, IU cell atmosphere, and PCLS.

In the event of a failure of the PCLS forced cooling function, the target solution is drained to the dump tank and the thermal mass provided by the light water pool provides sufficient decay heat removal capacity to provide cooling for the target solution. The temperature rise in the light water pool is not more than [ ]PROP/ECI after a decay heat period of [ ]PROP/ECI, assuming the pool is at its minimum allowable level (approximately [ ]PROP/ECI filled) for accident conditions (see Figure 4a2.4-1). The light water pool is also used to remove up to approximately [ ]PROP/ECI of decay heat from the uranyl sulfate solution in the dump tank after the target solution has been irradiated, but prior to transfer to the extraction cell (see Section 4a2.5).

Subsection 13a2.1.3 discusses loss of cooling events and concludes that the fission product boundaries are not challenged. The integrity of the light water pool is not challenged under any postulated accident conditions.

4a2.4.2.3 Radiological Shielding

The light water pool surrounding the TSV provides significant neutron and gamma shielding, thereby reducing the shielding requirements of the IU cell biological shield and reducing neutron activation of equipment located above the light water pool.

As noted in Section 4a2.5, neither the neutron nor gamma flux levels are high enough to threaten the integrity of the concrete structure surrounding the light water pool. Significant degradation of

the shielding performance of the water only occurs if void volume results from boiling. Based on the heat generation rates for the various operational conditions, the heat capacity of the pool water and the heat transfer rate to adjacent materials, boiling of the pool water is not credible. Pool water temperature is monitored to ensure it is within the normal operating temperature range. The relatively minor loss of shielding resulting from a decrease in the pool water density as the water temperature increases was included in the shielding analysis.

The design of the light water pool and associated piping and valving prohibit configurations that could accumulate significant volumes of radiolytic gases within the bulk volume of pool water, which could result in voids that do not provide equivalent shielding.

A principal objective of the light water pool (together with the concrete biological shielding) is to ensure the projected radiation dose rates and accumulated doses in occupied areas do not exceed the limits of 10 CFR 20 and the guidelines of the as low as reasonably achievable (ALARA) program, described in Subsection 11.1.3.

4a2.4.2.4 Instrumentation

The light water pool includes instrumentation to monitor temperature and liquid level.

Temperature instrumentation monitors temperature within the light water pool. The normal operating temperature range of the light water pool is 50 to 95°F (10 to 35°C).

Liquid level instrumentation monitors volume changes in the light water pool. If the liquid level of the pool decreases to the low liquid level, there may be a leak in the pool liner.

Repair procedures are conducted in accordance with the radiation protection, monitoring, and response guidelines described in Section 11.1.

4a2.4.3 TECHNICAL SPECIFICATIONS

Certain material in this section provides information that is used in the technical specifications. This includes limiting conditions for operation, setpoints, design features, and means for accomplishing surveillances. In addition, significant material is also applicable to, and may be used for the bases that are described in the technical specifications.

Figure 4a2.4-1 – Light Water Pool Loss of Cooling Heatup Curve

4a2.5 IRRADIATION FACILITY BIOLOGICAL SHIELD

4a2.5.1 INTRODUCTION

The irradiation cell biological shield (ICBS) provides a barrier to protect SHINE facility personnel and members of the public by reducing radiation exposure to radiation sources within the irradiation facility (IF). ICBS also provides radiation shielding to protect various components and equipment of the SHINE facility. ICBS is comprised of the following concrete enclosures:

- Irradiation unit (IU) cells
- Target solution vessel (TSV) off-gas system (TOGS) shielded cells
- Primary cooling rooms

The IU cells provide shielding from the subcritical assembly, discussed in Section 4a2.2, and from the neutron drivers, discussed in Section 4a2.3. The TOGS shielded cells provide shielding from the TOGS skids, discussed in Section 4a2.8. The primary cooling rooms provide shielding from the primary closed loop cooling system (PCLS) skids, described in Section 5a2.2. The primary cooling rooms also provide shielding from the radiological ventilation zone 1 recirculating subsystem (RVZ1r), described in Section 9a2.1.

A description of radiation source locations and source term characterizations can be found in Chapter 11.

Section 6a2.2 describes the ventilation and confinement functions of the ICBS.

The neutron driver service cell is described in Section 9a2.7.

4a2.5.2 BIOLOGICAL SHIELD DESIGN BASIS

4a2.5.2.1 Materials

The design bases for the materials to be included in the biological shield design are:

- The dose reduction by the biological shielding supports compliance with the as low as reasonably achievable (ALARA) objectives and dose limit required by 10 CFR 20, as described in Chapter 11.
- The dose reduction by the biological shielding supports radiation exposure mitigation during postulated accident conditions as described in Chapter 13.
- The design and construction of the concrete portions of the biological shield conform to NRC Regulatory Guide 1.69, Concrete Radiation Shields and Generic Shield Testing for Nuclear Power Plants (NRC, 2009), with the exception that the ICBS conforms to ACI 349-13 (ACI, 2014) instead of ACI 349-06 (ACI, 2007), as described in Subsection 4a2.5.4.2.

4a2.5.2.2 Geometry and Configuration

The general shape of the ICBS is that of rectangular slabs comprising the walls, cover plugs, and shield doors.

The thickness of the walls of the IU cell shielding varies from approximately 4.0 feet (ft.) (1.2 meters [m]) to 5.8 ft. (1.8 m), the walls of the TOGS shielded cell shielding vary from approximately 4.0 ft. (1.2 m) to 6.0 ft. (1.8 m), and the walls of the primary cooling room shielding vary from approximately 0.7 ft. (0.2 m) to 1 ft. (0.3 m). The IU cell cover plug thickness is approximately 4.3 ft. (1.3 m), the TOGS cover plug thickness is approximately 6.0 ft. (1.8 m), and the primary cooling room cover plug thickness is approximately 1.0 ft. (0.3 m).

Concrete shielding is of standard density (nominally 140 pounds per cubic foot [lb/ft^3]) (2.24 grams per cubic centimeter [g/cm^3]) concrete, and shield thicknesses result in general dose rates on the external surface of the shielding of less than 1.0 millirem per hour (mrem/hr). Local hot spots (e.g., penetrations, interfaces) will be measured as part of the shielding test program and will be managed appropriately according to the Radiation Protection Program (see Section 11.1). See Figure 4a2.5-1 for a general depiction of the ICBS.

The primary cooling room shield doors are carbon steel and have an approximate thickness of 3 inches (in.) (8 centimeters [cm]).

4a2.5.2.3 Loss of Shield Integrity

The biological shield walls and supporting structures are designed and constructed to remain intact during normal operations as well as during and following design basis accidents. A loss of shield integrity is not credible given the seismic design and robust nature of the IU and TOGS cells.

4a2.5.2.4 Unrestricted Environment

Based on the design and construction of the biological shield walls, the neutron flux to soils surrounding the biological shield walls, in the unrestricted environment, is estimated to be less than 100 n/cm^2-s. Thus, the neutron activation of groundwater and soils surrounding the biological shield is expected to be insignificant.

4a2.5.3 SHIELD MATERIALS

The ICBS concrete shielding uses two distinct materials in different configurations to assemble the biological shield and meet the radiation exposure goals defined in Chapter 11. The materials that make up the concrete shielding use an engineered concrete mix with carbon steel reinforcing bars. Standard concrete is used with no special additives for shielding purposes. In the shielding analyses, individual rebar is not modeled. Instead a homogenization of rebar and concrete is used when rebar is included in the modeling. Conservative assumptions are used to define the overall shielding properties of the concrete and rebar, and secondary radiation production is considered in the analysis.

4a2.5.3.1 Shielding Calculations

Calculations are performed with the software package MCNP (Monte Carlo N-Particle Transport Code). MCNP is developed and validated by Los Alamos National Laboratory (LANL) and distributed by the Radiation Safety Information Computational Center (RSICC) at Oak Ridge National Laboratory (ORNL). MCNP uses a Monte Carlo based particle (neutrons and photons) transport method to generate a set of particle tracks through a model of the facility geometry (LANL, 2011). The Monte Carlo method generates a statistical set of results for individual

particles transported through the geometry. Enough particles are simulated to obtain statistically-significant results. Shielding coefficients are not used in the MCNP calculation methodology, and therefore, were not calculated. TSV fission power is assumed at 125 kW or higher.

The components inside the IU cell that are considered to be significant contributors to the gamma and neutron fluxes are the neutron driver, the subcritical assembly system (SCAS), and TOGS. The interior surface of the IU cell wall was partitioned into two-foot by two-foot sections above the light water pool, and the neutron and gamma flux and dose rates in each section were calculated due to the operation of these systems. The doses below the light water pool are not required for shielding purposes as this portion of the IU cell is below grade and there are no areas where personnel would normally be present below grade near the IU cell.

For the IU cell, the magnitude of the contributions from the neutron driver during irradiation is:

- Average neutron flux and dose rate impinging on the interior shield wall: less than 1E+05 n/cm^2-s, less than 5 rem/hr
- Peak neutron flux and dose rate impinging on the interior shield wall: less than 2E+05 n/cm^2-s, less than 10 rem/hr
- Average gamma flux and dose rate impinging on the interior shield wall: less than 2E+05 gamma/cm^2-s, less than 0.3 rem/hr
- Peak gamma flux and dose rate impinging on the interior shield wall: less than 4E+05 gamma/cm^2-s, less than 0.5 rem/hr

For the IU cell, the magnitude of the contributions from the SCAS and TOGS during irradiation is:

- Average neutron flux and dose rate impinging on the interior shield wall: Not significant compared to the neutron driver
- Peak neutron flux and dose rate impinging on the interior shield wall: Not significant compared to the neutron driver
- Average gamma flux and dose rate impinging on the interior shield wall: less than 2E+07 gamma/cm^2-s, less than 20 rem/hr
- Peak gamma flux and dose rate impinging on the interior shield wall: less than 6E+07 gamma/cm^2-s, less than 70 rem/hr

There is no significant source of neutron generation in the TOGS cell. The components inside the TOGS cell that are considered to be significant contributors to the gamma fluxes are the TOGS components that contain fission and activation products carried over from the subcritical assembly. The interior surface of the TOGS shield wall was partitioned into two-foot by two-foot sections, and the gamma flux and dose rates in each section were calculated due to the operation of this system.

For the TOGS cell, the magnitude of the fluxes and dose rates during irradiation is:

- Average gamma flux and dose rate impinging on the interior shield wall: less than 4E+09 gamma/cm^2-s, less than 4000 rem/hr
- Peak gamma flux and dose rate impinging on the interior shield wall: less than 5E+09 gamma/cm^2-s, less than 6000 rem/hr

Similar to the TOGS cell, there is no significant source of neutron generation in the primary cooling room. Gamma fluxes are from activation of the cooling water as it passes through the

subcritical assembly. The interior surface of the primary cooling room wall was partitioned into two-foot by two-foot sections, and the gamma flux and dose rates in each section were calculated due to the operation of the subcritical assembly and primary cooling system.

For the primary cooling room, the magnitude of the fluxes and dose rates during irradiation is:

- Average gamma flux and dose rate impinging on the interior wall: less than 3E+04 gamma/cm^2-s, less than 9E-02 rem/hr
- Peak gamma flux and dose rate impinging on the interior wall: less than 9E+04 gamma/cm^2-s, less than 3E-01 rem/hr

4a2.5.3.2 Radiation Damage

4a2.5.3.2.1 Concrete

According to the ANSI/ANS-6.4-2006, Nuclear Analysis and Design of Concrete Radiation Shielding for Nuclear Power Plants*,* nuclear heating in concrete can be neglected if the incident energy fluxes are less than 1E+10 MeV per square centimeter per second (MeV/cm^2-sec) or if temperatures are maintained below 149°F (65°C) (ANSI/ANS, 2006).

During irradiation, significant neutron and gamma fluxes are created by the irradiation process in the subcritical assembly. The light water pool serves to significantly reduce the magnitude of the fluxes that reach the ICBS. The cumulative effects of the neutron and gamma fluxes from the neutron driver, SCAS, and TOGS sources have been analyzed with MCNP software, and peak energy fluxes in the concrete were found to be less than 1E+10 MeV/cm^2-sec in all areas except immediately below the TSV dump tank, which had a maximum energy flux of 6E+10. With this region of the shielding in direct contact with the light water, which has a maximum temperature of 95°F (35°C) during normal operation, heat transfer from the concrete to the pool water is sufficient to maintain the concrete temperature below the 149°F (65°C) limit. Therefore, no nuclear heating concerns exist.

With regard to degradation, NUREG/CR-7171, A Review of the Effects of Radiation on Microstructure and Properties of Concretes Used in Nuclear Power Plants (NRC, 2013), provides recommended radiation exposure limits for concrete. The most limiting of the values listed are an integrated neutron fluence up to 1E+19 n/cm^2 and an integrated dose of gamma radiation up to 1E+10 rads, which have been shown to not significantly impact structural properties. Using MCNP, analysis of the maximum neutron and gamma doses to the concrete over the 30 year lifetime were < 2E+14 n/cm^2 and < 3E+09 rads, respectively. Given these results, concrete radiation degradation is not significant and does not need additional design considerations.

4a2.5.3.2.2 Steel

No neutron fluxes that could result in degradation or activation of the primary cooling room shield doors are present in the primary cooling room.

4a2.5.3.3 Radiation Streaming

The ICBS requires a number of penetrations, inserts, and other features where the bulk shielding materials are reduced in thickness, or where the materials used in the penetration are less dense than the surrounding bulk material. Each such penetration is designed with well-demonstrated

techniques of supplemental shielding, location in areas of low incident radiation, non-linear paths, and/or other methods to reduce streaming and leakage to ensure 10 CFR 20 limits are met. The largest penetrations through the ICBS are for the RVZ1r ducts and were analyzed at a bounding diameter of 14 in. (0.36 m). Location in areas of low incident radiation and supplemental shielding are used in these areas.

Penetration designs are performed with MCNP, with appropriate variance reduction techniques to ensure statistically significant results are obtained.

4a2.5.3.4 Induced Radioactivity in Structural Components

The induced radioactivity in structural components from neutron activation has been evaluated and considered in the design. A conservative analysis has been performed, including consideration of potential impurities in structural components. The total induced activity in structural components, due to impurities in the concrete, inside the IU cell (e.g., neutron driver support beams) was calculated to be less than 2E-03 Ci, and the total induced activity in structural components within the walls (i.e., concrete and rebar) was calculated to be 7E-02 Ci, with 40 percent of that activity occurring within the inner one foot of the concrete wall. Induced radioactivity is not significant for shielding design relative to other source terms from irradiation.

4a2.5.4 ANALYSIS

Analysis is performed to:

- Give detailed results of both neutron and gamma-ray dose rates at locations that could be occupied as well as to the unrestricted environment.
- Include shield penetrations and voids, as well as the shielding of piping and other components that could contain radioactive materials or allow radiation streaming.
- Determine extent of radiation effect on shielding materials (i.e., heating and activation).

4a2.5.4.1 Methodology

4a2.5.4.1.1 Concrete Radiation Shielding Minimum Thickness – Radiation Shielding Requirements

The minimum thickness of concrete radiation shields, based on radiation shielding requirements, is determined using the following approach:

a. Use ANSI/ANS 6.4-2006, Chapters 6, 7, and 8, as an overview of the historic calculation methodology for concrete radiation shields (ANSI/ANS, 2006).
b. Use Monte Carlo techniques for radiation shielding calculations.
c. Use a qualified version of the software for radiation shielding calculations (i.e., MCNP).
d. Use concrete composition input parameters for the MCNP calculations that correspond to the concrete used for the radiation shields.

4a2.5.4.1.2 Concrete Radiation Shielding Minimum Thickness – Structural Requirements and Other Structural Dimensions and Reinforcement Requirements

The minimum thickness of concrete radiation shields, based on structural requirements, and other structural dimensions and reinforcement requirements is determined in accordance with

the provisions of ACI 349-13 (ACI, 2014) for applicable normal loads, severe and extreme environmental loads, and abnormal loads, as defined in Section 9.1 of ACI 349-13. See Subsection 3.4.2.6 for details on the structural analysis methodology.

4a2.5.4.1.3 Concrete Radiation Shielding – Final Minimum Thickness

The final minimum thickness of the concrete biological shield structure for the IF is based on the greater of the radiation shielding requirements and the structural requirements. Thicknesses required for shielding are listed in Subsection 4a2.5.2.2.

4a2.5.4.1.4 Load and Strength Reduction Factors

Load and strength reduction factors for the structural design of concrete shield structures and related members will be based on those prescribed in ACI 349-13 (ACI, 2014), Sections 9.2 and 9.3, respectively.

4a2.5.4.1.5 Design of Concrete for Shielding Structures

The design of the concrete for shielding structures, including materials selection, durability requirements, quality control, mixing, placement, formwork, embedded pipes, construction joints, reinforcement, analysis, and design will conform to provisions outlined in Chapters 3 through 8 of ACI 349-13 (ACI, 2014).

4a2.5.4.1.6 Exceptions for Use of ACI 349-13

Regulatory Guide 1.69, Revision 1 (NRC, 2009) includes exceptions to the use of ACI 349-06. SHINE utilizes the revision to ACI 349-06 (ACI, 2007), ACI 349-13 (ACI, 2014), and has identified the following exceptions to align with the intent of the exceptions listed in Regulatory Guide 1.69, Revision 1. ACI 349-13, Section 1.2.2, states that input and output data shall be retained as documentation when software is used for the calculation (ACI, 2014). The software itself and other related documentation shall be retained as well. It is not required that the software be updated regularly.

SHINE does not utilize the following sections of ACI 349-13:

- Section 3.3.1: The exception portion of the section is not followed.
- Section 3.3.2 references ACI 318-08, Section 3.3.2 (ACI, 2008). The text in ACI 318-08, Section 3.3.2 stating, “These limitations shall not apply if, in the judgment of the licensed design professional, workability and methods of consolidation are such that concrete can be placed without honeycombs or voids,” is not followed.
- Section 5.4.1 references ACI 318-08, Section 5.4.1 (ACI, 2008). The text in ACI 318-08, Section 5.4.1 stating, “If data required by 5.3 are not available, concrete proportions shall be based upon other experience or information, if approved by the licensed design professional. The required average compressive strength f'cr of concrete produced with materials similar to those proposed for use shall be at least 1200 psi greater than f'c. This alternative shall not be used if f'c is greater than 5000 psi,” is not followed.
- Section 5.6.2.3: “When total quantity of a given class of concrete is less than 50 yd^3, strength tests are not required when evidence of satisfactory strength is submitted to and approved by the licensed design professional,” is not followed. Instead, the provisions of

Regulatory Position 5 of Regulatory Guide 1.142 for strength testing are utilized (NRC, 2001a).

- Section 7.10 references ACI 318-08, Section 7.10 (ACI, 2008). The text in ACI 318-08, Section 7.10.3 stating, “It shall be permitted to waive the lateral reinforcement requirements of 7.10, 10.13, and 18.11 where tests and structural analysis show adequate strength and feasibility of construction,” is not followed.

4a2.5.5 TEST PROGRAM

ANSI/ANS 6.3.1-1987 (R2015), Program for Testing Radiation Shields in Light Water Reactors (LWR) (ANSI/ANS, 2015), is used as a guide in the development of a test program to be used in evaluating biological radiation shielding in the SHINE facility under normal operating conditions, including anticipated operational occurrences.

4a2.5.6 TECHNICAL SPECIFICATIONS

Certain material in this section provides information that is used in the technical specifications. This includes limiting conditions for operation, setpoints, design features, and means for accomplishing surveillances. In addition, significant material is also applicable to, and may be referenced by the bases that are described in the technical specifications.

**Figure 4a2.5-1 — Irradiation Facility Biological Shield (not to scale)
(Sheet 1 of 2)**

**Figure 4a2.5-1 — Irradiation Facility Biological Shield (not to scale)
(Sheet 2 of 2)**

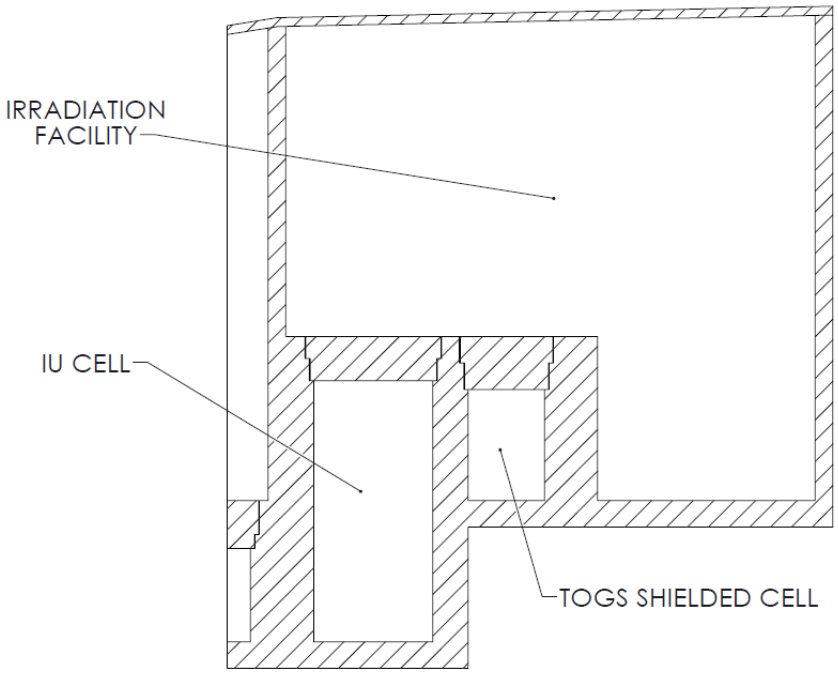

Section View Through TOGS Shielded Cell

4a2.6 NUCLEAR DESIGN

The irradiation unit (IU) for the main production facility employs an aqueous homogeneous target solution of uranyl sulfate which is irradiated by an external neutron source for production of medical isotopes. The irradiation facility (IF) consists of eight independent IUs, each consisting of the neutron driver assembly system (NDAS), subcritical assembly system (SCAS), primary closed loop cooling system (PCLS), target solution vessel (TSV) off-gas system (TOGS), light water pool, and supporting systems. The tritium purification system (TPS) is shared between the eight IUs. These systems operate in conjunction to achieve conditions and neutron fluxes sufficient to reach desired fission (molybdenum-99 [Mo-99] production) rates. The subsections that follow outline the nuclear parameters and characteristics of the subcritical assembly throughout its life cycle. These analyses show that the system is inherently stable during both steady-state and transient operations.

4a2.6.1 NORMAL OPERATING CONDITIONS

The normal operating conditions for the subcritical assembly are most significantly affected by four factors:

- uranium concentration in the target solution;
- fill height of the TSV;
- target solution temperature; and
- neutron driver neutron generation rate.

The SCAS is designed to remain in the subcritical operating region in all operating modes. The five modes that are used to describe the subcritical assembly status:

- Mode 0 – Solution Removed: No target solution in the SCAS
- Mode 1 – Startup: Filling the TSV
- Mode 2 – Irradiation: Operating mode (neutron driver active)
- Mode 3 – Post-Irradiation: TSV dump valves open
- Mode 4 – Transfer to radioisotope production facility (RPF): Dump tank drain valve opens to permit solution transfer

Modes 1, 2, and 3 are relevant to the nuclear design and are discussed in this section. Figure 4a2.1-2 provides the configuration of the SHINE subcritical assembly and is a useful reference in understanding this subsection and the relationship between components in the different operating modes. These modes are also described in Section 7.3.

Mode 1: Startup Mode

Prior to entering startup mode (filling the TSV), the TSV dump tank is empty and the target solution hold tank is filled with target solution (see Figure 4a2.2-1). Chemical and physical properties of the target solution are described in Subsection 4a2.2.1. The target solution uranium concentration, catalyst concentration, and pH are measured and adjusted as necessary to ensure parameters are within the prescribed technical specification limits. At a minimum, sampling is performed after preparation of a new batch and after making adjustments to an existing batch, prior to transferring the batch to the TSV.

The vacuum transfer system (VTS) is used to transfer the target solution to the TSV in a controlled manner, both with respect to fill rate and total volume. The TSV fill lift tank is used to transfer target solution from the target solution hold tank to the TSV. The solution is lifted into the TSV fill lift tank by vacuum and then gravity drained into the TSV. This tank is sized for approximately [ ]PROP/ECI of target solution.

The target solution hold tank is at an elevation below that of the TSV to reduce the potential for an accidental gravity-driven transfer of target solution to the TSV. Positive action by the operator and control systems is required to add target solution to the TSV. To avoid pressurized, pumped transfer, the TSV fill lift tank is located above the TSV (see Figure 4a2.2-1). Upon completion of filling and mode transfer to irradiation mode, the TSV fill lift tank is drained back to the target solution hold tank.

During filling, the subcritical multiplication source allows the flux detectors to monitor the reactivity increase of the assembly. This fixed neutron source provides a higher degree of accuracy and reliability compared to use of the neutron driver due to the known neutron source strength.

The TSV is filled in increments. The first fill increment is below the volume required for the system to go critical at the most reactive uranium concentration. After this fill increment, neutron flux measurements are able to detect gross fissile material concentration errors in the target solution.

During the fill process, a 1/M startup methodology is employed, and the startup curve is compared to the acceptable 1/M startup band. If the calculated 1/M curve violates the acceptable band, the operators dump the solution to the TSV dump tank. The TSV level instrumentation and the process integrated control system (PICS) are used to provide level measurements for the 1/M. The system is filled to a height that is approximately 5 percent by volume below critical. The expected k_{eff} after a normal startup, at cold conditions, is approximately [ ]PROP/ECI, which results in an expected margin to criticality of approximately [ ]PROP/ECI, or approximately [ ]PROP/ECI.

Additional volume margin to critical will be added based on the bounding water holdup expected in TOGS during irradiation. The additional margin will offset the reactivity increase due to the small increase in uranium concentration caused by the loss of water from the TSV. The magnitude of the additional volume margin is dependent on the mass of water lost to TOGS. For example, the additional volume margin to critical calculated for a TOGS holdup of 6.6 pounds (lbs.) (3 kilograms [kg]) of water is [ ]PROP/ECI and the TSV would be filled to approximately [ ]PROP/ECI below the estimated critical fill.

The 1/M curve acceptable band and interpretation by the operator is an additional barrier to the automatic safety systems. The use of the 1/M plot provides a visual indication of the system behavior to the operators and is useful for startup operations. TSV volume hold points are used to calculate the location within the 1/M curve acceptable band. This is an administrative, defense-in-depth measure, and is not required for safe startup and operation.

An acceptable band around the normal startup provides early indication to the operators of a potential issue; however, the TSV reactivity protection system (TRPS) and the neutron flux detection system (NFDS) ensure that the TSV is automatically dumped to protect the integrity of

the primary system boundary (PSB) should the safety parameter trip points be exceeded, including high source range neutron flux.

In addition to TSV fill volumes and reactivity, the temperature of the target solution is monitored via the temperature of the PCLS water. Due to the low decay power of the target solution, its temperature is approximately equal to the cooling water temperature during startup mode. Due to the operating characteristics of the SHINE system, a decrease in the temperature of the target solution results in an increase in system reactivity. Excessive cooldown of the target solution during startup is prevented by the TRPS initiating an IU Cell Safety Actuation on low PCLS temperature and high source range neutron flux. The IU Cell Safety Actuation results in drainage of the target solution in the TSV to the TSV dump tank, which maintains the k_{eff} below 0.94 for the most reactive credible uranium concentration.

If at any time during the fill process neutron flux, TSV fill volume, or target solution temperatures are determined to be outside allowable parameters, operators will transfer the entire contents of the TSV to the TSV dump tank via gravity by opening the TSV dump valves. Due to the location of the TSV dump tank in the light water pool, decay heat removal requirements from the target solution are satisfied.

Mode 2: Irradiation Mode

After filling the TSV with target solution, the TSV is isolated from the TSV fill lift tank and the target solution hold tank by closing two redundant (in series) fill valves. During Mode 2, there is no capability to increase reactivity by adding target solution to the TSV. Given the aqueous target solution negative void and temperature coefficients, reactivity decreases as the irradiation process begins. Furthermore, any increase in operating power levels beyond normal operating conditions results in a temperature increase and a corresponding increase in the void fraction of the target solution itself, reducing the power level.

Testing has demonstrated that the pH of the uranyl sulfate remains stable during full power operation. The TSV, TSV dump tank, and TOGS are operated as a closed system, except for gas adjustments in TOGS for pressure and oxygen concentration control, to prevent an inadvertent addition of material that could affect reactivity or system chemistry. Malfunctions in the TOGS gas adjustments are evaluated for potential reactivity effects in the accident analysis discussed in Subsection 13a2.1.2. The introduction of water into the system as a result of the failure of the pressure boundary is also analyzed in Subsection 13a2.1.2.

During irradiation of the subcritical assembly, the TOGS is used to purge radiolytic hydrogen from the headspace in the TSV. Section 4a2.8 provides a detailed discussion of the TOGS. The PCLS has the capability to remove approximately 137.5 kilowatts (kW) (469,000 British thermal units per hour [Btu/hr]) of heat from the TSV during irradiation. Cooling water is supplied to the external surfaces of the TSV and neutron multiplier at approximately 68°F (20°C) and exits the TSV and neutron multiplier at a maximum temperature of approximately 77°F (25°C). The TRPS monitors the PCLS during irradiation for low flow, high temperature, and low temperature and initiates an IU Cell Safety Actuation if the limits are exceeded.

The light water pool is not directly cooled. The light water pool provides a large thermal mass that absorbs heat and passively rejects heat to the PCLS-cooled components submerged in the pool and the surrounding concrete and air in the IU cell. The operating temperature of the pool ranges between 50°F and 95°F (10°C and 35°C).

In addition to monitoring reactivity during TSV filling, the flux detectors are used to monitor neutron multiplication rates and power levels in the subcritical assembly during operation. Typical neutron flux ranges are provided in Table 4a2.6-1.

During irradiation mode, the neutron driver high voltage power supply (HVPS) is energized to allow the production of fusion neutrons. [

]PROP/ECI Without the neutrons produced by the neutron driver, neutron flux and fission power levels drop to near zero with a time constant defined by the delayed neutron precursor half-lives.

As the SHINE system transitions from Mode 1 startup conditions to Mode 2 irradiation conditions, the k_{eff} of the system decreases to approximately [ ]PROP/ECI. This is a margin to criticality of approximately [ ]PROP/ECI.

Mode 3: Post-Irradiation Mode

Following irradiation, the neutron driver HVPS is de-energized. The TSV dump valves are opened and target solution is drained to the favorable geometry TSV dump tank. The pool serves to remove decay heat from the target solution via conduction through the TSV dump tank walls and convection to the pool water.

4a2.6.1.1 Gas Management System Effects

The primary functions of the TOGS include the management of fission product gases, the recombination of hydrogen and oxygen that come out of the target solution during irradiation, and returning the condensed water to the TSV (see Subsection 4a2.8.2). The radiolysis of water in the system and constant evaporation of target solution causes an anticipated increase in reactivity during operation due to the holdup of water within the TOGS condensers and piping. This increase occurs slowly as the assembly reaches steady-state operation. The total positive reactivity inserted is small in comparison to the large negative reactivity inserted by the increase in temperature and solution void during operation.

Up to 0.8 gal. (3 L) of water is calculated to be held up outside of the TSV in the TOGS assuming bounding evaporation and condensation rates. This is approximately [ ]PROP/ECI of the TSV volume.

The reactivity increase caused by removing 0.8 gal. (3 L) of water from the TSV during Mode 2 irradiation with the nominal core configuration is up to [ ]PROP/ECI. This water removal results in an increase in the uranium concentration up to [ ]PROP/ECI. To compensate for the anticipated reactivity increase from water holdup in TOGS, an additional volume margin to critical is applied to the fill during startup mode. The reactivity worth of the additional volume margin is greater than or equal to the reactivity worth of the water held up.

Sweep gas flow rate from TOGS to the TSV headspace is sufficiently high to reduce hydrogen concentrations below acceptable limits, while also low enough to minimize the potential for target solution entrainment in the sweep gas flow.

Due to the sulfate chemistry of the SHINE system, there is no significant nitrogen oxide (NO_x) gas released into the TOGS.

Due to the low power operation of the SHINE system, the effect of the release of gaseous fission products into TOGS on the power and flux in the SHINE system is minimal. The reactivity effects of fission product poisons are discussed below in Subsection 4a2.6.2.4.

TOGS controls the pressure in the PSB. The reactivity effects from pressure oscillations in TOGS are described below in Subsection 4a2.6.1.2.

Off-gases are discharged from the PSB through the TSV off-gas vacuum tank during venting and purging operations. The vacuum tank is periodically vented to the VTS, as needed to maintain sufficient vacuum. Venting of the vacuum tank to VTS may occur during an irradiation cycle. Interlocks in PICS and isolation valves on the vacuum tank prevent direct connection of VTS to the TSV gas space during Mode 2 operations. The TOGS can be purged with compressed air or nitrogen for maintenance or other dose reduction reasons. Both vent gases and purge gases are transferred to the VTS, and VTS discharges to the process vessel vent system (PVVS). The PVVS uses filters, carbon guard beds, and carbon delay beds to ensure particulates and iodine are scrubbed and radioactive noble gases are sufficiently held up prior to release to meet the requirements of 10 CFR 20. Subsection 9b.6.1 provides a detailed description of the PVVS.

If power is not available to TOGS, the irradiation process is terminated by TRPS. Off-gases are then discharged through a continual purging process to maintain hydrogen concentrations at acceptable levels. The nitrogen purge system (N2PS) supplies the purging gas and the gas is discharged through the PVVS system for proper filtering and delayed release. Subsection 9b.6.2 provides a detailed description of the N2PS.

A detailed discussion of the TOGS is provided in Section 4a2.8.

4a2.6.1.2 TSV Operating Characteristics

As stated earlier, the k_{eff} in the system is approximately [ ]$^{PROP/ECI}$ at cold startup conditions. As the system moves into Mode 2, various reactivity effects occur as described below.

The acceptable fill height of the solution following Mode 1 startup is between [ ]$^{PROP/ECI}$ from the bottom of the TSV. The resulting TSV batch volume is between [ ]$^{PROP/ECI}$, not including the dump line volume.

The calculated 1/M curves, showing the approach to cold startup k_{eff} values, are provided in Figure 4a2.6-1. Curves are provided that bound the expected startup conditions at minimum and nominal (maximum) batch volumes.

After transition from Mode 1 to Mode 2, the neutron driver HVPS is energized [ ]$^{PROP/ECI}$.

The TSV can be operated at a fission power level in Mode 2 of up to 125 kW. The 125 kW maximum power level ensures that the safety analysis assumptions are satisfied for fission product inventories and power density. The TSV must also be operated above a minimum power

level defined by the TRPS Driver Dropout on low power range neutron flux, as described in Section 7.4. This low power range neutron flux ensures sufficient negative reactivity is in the TSV prior to energizing high neutron source strengths.

The PCLS provides constant cooling water inlet temperature to the TSV within a range of 59°F (15°C) to 77°F (25°C). The target solution temperature in Mode 1 is from 59°F (15°C) to 77°F (25°C). At 125 kW fission power, the nominal average operating temperature is 118°F (48°C), which adds a calculated [ ]PROP/ECI of negative reactivity into the system from temperature effects.

Formation of radiolytic gases during operation increases the void fraction of the target solution. This also causes a decrease in reactivity as a result of the negative void coefficient. Void fraction in Mode 1 conditions from decay radiation is less than 0.02 percent. Nominal average void fraction during Mode 2 operations is estimated to be [ ]PROP/ECI at 125 kW power. This radiolytic gas formation during irradiation is calculated to add negative reactivity of approximately [ ]PROP/ECI at 125 kW power.

As stated in the previous subsection, the holdup of water in the TOGS due to radiolysis has a positive effect on reactivity because it increases the uranium concentration of the target solution. The TOGS is designed to ensure that the volume of water held in the system is less than 0.8 gal. (3 L), and the water holdup is accounted for in the system design. See Subsection 4a2.6.1.1 for reactivity worths.

During startup, irradiation, and shutdown operations, TOGS regulates gas pressures in the PSB to maintain pressures within the acceptable range. TOGS regulates TSV gas pressure between -2.0 psig (-13.8 kPa) and 0.0 psig (0.0 kPa). If pressure is too low, additional compressed air or nitrogen is added to the system. If pressure is too high, sweep gas is vented to the vacuum tank.

Increased gas pressures in the TSV reduce void fraction, leading to positive reactivity addition. The maximum reactivity change due to TOGS pressure regulation during normal operations occurs with the maximum change in pressure (i.e., air or nitrogen gas injection or venting from -2.0 psig [-13.8 kPa] to 0.0 psig [0.0 kPa]) at the maximum void fraction of 5 percent at 125 kW power. This reactivity effect is calculated to be [ ]PROP/ECI.

The nominal operating k_{eff} is approximately [ ]PROP/ECI. The target solution chemistry (pH, catalyst concentration, and uranium concentration) does not change during irradiation other than the small effects of water holdup in the TOGS. Target solution injection from the target solution hold tank during irradiation is not credible due to the TSV being located higher than the target solution hold tank and the fill valves being de-energized and interlocked during irradiation.

As the TSV is an accelerator-driven subcritical assembly, normal power oscillations will occur due to changes in reactivity or neutron driver output. Oscillations in TSV fission power are expected to be the result of coupled system oscillations, principally due to source oscillations from the neutron driver, pressure variations in the TOGS, and temperature variations in PCLS. The most significant source of power oscillations is the neutron driver.

The neutron yield of the accelerator is normally maintained within 10 percent stability during the operating cycle, which leads to less than 10 percent variation in TSV fission power. However, the

neutron yield can temporarily decrease to 0 percent, or to any fraction of full output, due to electrical, beam focusing, or other temporary issues in the NDAS. Beam interruptions are considered normal behavior of accelerator technology. This results in a corresponding decrease in TSV fission power, with a rate of response limited by delayed neutron effects. As the TSV begins to cool down and lose void fraction during an accelerator transient, reactivity increases. The TRPS limits the duration that the neutron driver is allowed to drop out before it is required to ramp up to full source strength using a method similar to startup. This protection is discussed further in Section 7.4.

The neutron driver control system will restart the neutron driver for transients within the transient recovery time, which is a function of the maximum driver source strength. The change in accelerator output results in a change in gas production in the TSV and thermal power output. The TSV does not contain, nor require, engineered reactivity control mechanisms for any design basis conditions. Through these oscillations, the TOGS maintains essentially constant sweep gas flow and the PCLS maintains constant cooling water temperatures entering the TSV.

Reactivity increases during these reduced power transients due to the negative feedback coefficients. As the accelerator returns to full output, the gas production and temperature increase. Since reactivity has increased, the power level will be higher than it was previously at the same source strength. This is short-lived though as the void quickly builds back in and the temperature increases, reducing reactivity back to the previous operating level. The transient recovery time allowed by TRPS, before a ramp up is required, is set to limit the peak power level reached and prevent the system from exceeding operational limits. For a complete loss of fusion neutron production for 10 seconds, TSV fission power decreases to approximately [ ]PROP/ECI of the previous steady state value before recovering. The system then experiences an approximately [ ]PROP/ECI overpower before returning to the initial power. A complete evaluation of the neutron driver induced transient is presented in Subsection 4a2.6.1.4.

As TOGS cycles between pressure control setpoints, it creates reactivity oscillations. The magnitude of reactivity changes from pressure regulation in TOGS are presented above. These pressure regulations are calculated to result in a change in TSV fission power of less than [ ]PROP/ECI for a nominal system.

PCLS cooling water is maintained within an acceptable band, as described above. The maximum change in fission power from oscillation between the high and low temperature limits is calculated to be approximately [ ]PROP/ECI.

The normal transients described above do not challenge PSB integrity and the Technical Specification Safety Limits. The resulting oscillations are acceptable, and modeling and results are discussed in detail below in Subsection 4a2.6.1.4.

4a2.6.1.3 TSV Burnup, Transmutation, and Removal/Addition Effects

The target solution is normally passed through the extraction column each week and then returned to the target solution hold tank for reuse. Prior to reuse, volume and temperature are verified acceptable and samples can be taken and analyzed to ensure the solution meets the specifications for pH, catalyst concentration, and uranium concentration. If the solution does not meet specifications, it is adjusted by the addition of components with the target solution preparation system (TSPS) to meet acceptance criteria, if possible. If not possible, it will be sent

to a storage tank or the radioactive liquid waste storage (RLWS) system to eventually be processed for disposal by the radioactive liquid waste immobilization (RLWI) system, as described in Section 9b.7.

The nominal and safety basis calculations are based on [ ]PROP/ECI of irradiation at full power and 10 percent above full power, respectively. The safety basis irradiation schedule is assumed as repetition of a 30 day continuous irradiation period at 137.5 kW fission power followed by a [ ]PROP/ECI shutdown period (i.e., 30 days irradiation, [ ]PROP/ECI shutdown, 30 days irradiation, [ ]PROP/ECI shutdown, etc.). The nominal irradiation cycles are expected to be 5.5 days in duration, with [ ]PROP between cycles. See Subsection 11.1.1 for more information on the target solution source terms.

A target solution batch is disposed of as waste prior to exceeding an accumulated irradiation time of [ ]PROP/ECI.

The target solution changes between each irradiation cycle are small. Less than [ ]PROP/ECI of the uranium-235 (U-235) in the target solution is burned up over a normal 5.5 day irradiation cycle. Total burnup through the solution life results in less than [ ]PROP/ECI, without considering target solution additions to make up for process losses.

The change in core reactivity due to uranium burnup with each irradiation cycle is less than [ ]PROP/ECI with new, unirradiated solution, and less than [ ]PROP/ECI with end-of-life target solution. The burnup of the uranium from beginning of life to end of life has a total reactivity effect calculated as [ ]PROP/ECI.

While small, the reactivity losses from burnup are automatically compensated for during each fill process due to the 1/M fill process. Fill heights are calculated during the fill process to result in fill volumes approximately 5 percent below critical; therefore, fill height will slightly increase with lower worth solution. Solution concentration can also be adjusted within the allowable uranium concentration range over the life of the solution to compensate for uranium burnup (see Table 4a2.2-2).

The calculated uranium concentration with unirradiated target solution for [ ]PROP/ECI fill height (5 percent by volume below critical) in the TSV is [ ]PROP/ECI. With [ ]PROP/ECI irradiated solution, the calculated uranium concentration for [ ]PROP/ECI fill height (5 percent by volume below critical) in the TSV when considering burnup effects is estimated to be [ ]PROP/ECI, an increase of [ ]PROP/ECI.

Transmutation of the uranium in the target solution results in the production of plutonium. Total plutonium production as a result of target solution irradiation over the solution life is shown in Table 4a2.6-2. [ ]PROP/ECI The expected normal mass of plutonium in a target solution batch at the end of life is also shown in Table 4a2.6-2.

The reactivity effect of the total plutonium production over solution life is [ ]PROP/ECI, which is equivalent to [ ]PROP/ECI at normal conditions. The reactivity effect of the

expected mass of plutonium in a target solution batch at the end of life is statistically insignificant [ ]PROP/ECI at normal conditions.

The neutron multiplier also undergoes burnup. The neutron multiplier is designed for a 30 year lifetime. Natural uranium metal in the multiplier contains 0.7 percent U-235, which is depleted by the fission process. In addition, plutonium is produced by the capture of neutrons in the uranium-238 (U-238). Unlike the target solution, the multiplier does not undergo chemical processing, and therefore, the plutonium production and the uranium burnup are not separable effects. The burnup numbers provided below account for simultaneous consumption of uranium and production of plutonium.

Change in reactivity of the nuclear system due to multiplier burnup is calculated to be less than [ ]PROP/ECI over the first 5 years of multiplier life. Over the duration of the last 5 years of the 30 year lifetime, the change in reactivity due to multiplier burnup is calculated to be less than [ ]PROP/ECI.

Fission product poisons xenon-135 (Xe-135) and samarium-149 (Sm-149) are produced in the TSV during the fission process. The reactivity worth due to Xe-135 and Sm-149 in the TSV over the first four 5.5 day cycles of batch life and the final four 5.5 day cycles of batch life [ ]PROP/ECI is presented in Figure 4a2.6-2 and Figure 4a2.6-3, respectively. Xenon was assumed to not escape from solution, resulting in bounding reactivity worth. As shown in Figure 4a2.6-3, the steady-state reactivity worth of Xe-135 is up to [ ]PROP/ECI. The reactivity worth from Sm-149 increases over the irradiation cycles, with a worth change per cycle of up to [ ]PROP/ECI.

The maximum reactivity change due to both Xe-135 and Sm-149 in the TSV, assuming no extraction, over the course of a cycle is calculated to be [ ]PROP/ECI. This change in reactivity is calculated to reduce operating neutron multiplication and fission power by less than [ ]PROP/ECI relative to a system without Xe-135 and Sm-149.

During the 1/M startup process, xenon within the target solution from previous cycles will partially decay. This decay results in a small reactivity addition. The rate of reactivity addition from xenon decay during startup is calculated to be less than [ ]PROP/ECI and is considered insignificant.

Xe-135 is expected to be partially extracted to the TOGS gas space during irradiation. Any xenon that leaves the target solution to the TOGS gas space will reduce the already small reactivity impact of xenon described above.

Sm-149 may be partially extracted by the Mo-99 extraction process. Due to the calibration of the startup 1/M process, fill height and uranium concentration will be adjusted to account for the reactivity changes due to changes in Sm-149 concentration.

Xe-135 and Sm-149 are also produced in the multiplier due to irradiation. Fission product poison worth in the multiplier follows a similar curve shape as the TSV, as fission in the multiplier is proportional to the TSV power. Steady-state reactivity worth of Xe-135 in the multiplier is up to [ ]PROP/ECI. Similar to the target solution, the reactivity worth from Sm-149 in the multiplier increases over the irradiation cycles, with a worth change over the 30 year lifetime of up to [ ]PROP/ECI.

The maximum reactivity change and corresponding effect on fission power due to both Xe-135 and Sm-149 in the multiplier over the course of a single cycle is negligible.

No reactivity poisons are added to the target solution by design.

No target solution or acid is added to the TSV during the Mode 2 irradiation process.

TOGS condenses water vapor and returns condensate to the top of the TSV. Condensate returned is lower density than target solution. Returned condensate is well mixed during normal Mode 2 irradiation due to the bubble generation and natural convection of the target solution. See Section 4a2.7 for a discussion of the thermal hydraulics within the TSV. Due to the mixing of the solution and condensate, the reactivity effect of condensate return during Mode 2 is not significant.

During Mode 1 startup, the target solution may not be well mixed due to low decay heat levels. To bound the reactivity effect, the entire TSV headspace was assumed to be filled with water that remained completely segregated from the target solution. The reactivity effect is calculated to be less than [ ]$^{PROP/ECI}$ for the nominal core and [ ]$^{PROP/ECI}$ for the limiting (minimum volume) core, which is acceptable and accounted for in the startup margin calculations.

4a2.6.1.4 TSV Kinetic Behavior

During operation, power oscillations are expected due to radiolysis void migration in the solution, pressure changes in the PSB from TOGS changes, neutron driver yield variation, and temperature changes. The solution mixes through natural convection due to the heat removal at the walls [ ]$^{PROP/ECI}$ and flow induced by the radiolytic bubble production. The power oscillations are self-limiting given SHINE's power density and negative temperature and void coefficients, as discussed in Subsection 4a2.6.3.2.

Analyses are performed using the SHINE computer code Transient Reactivity Integration Accelerator Driven Multiphysics Code (TRIAD), which is an extension of the Los Alamos National Laboratory (LANL) developed dynamic system simulation tool (LANL, 2013a; LANL, 2013b; LANL, 2014a; LANL, 2014b). TRIAD calculates the coupled transient system behavior of the SCAS, TOGS, neutron driver, and PCLS. A more detailed description of TRIAD is provided in Subsection 4a2.6.2.1.

During transients, radiolysis rates will change, and lead to changes in the distribution of voids in the system. The TRIAD code predicts the integrated system behavior, including the expected effects of radiolysis on power oscillations resulting from the formation and movement of voids. TRIAD calculates the void produced and total void fraction in 10 axial zones and models the movement of void through the zones up to the target solution surface. The reactivity effect of the void in each zone is calculated at each time step of the transient.

During steady-state operation, void fraction distribution is stable. The reactivity effects of void movement and formation during transients are included in the results of the discussions below on off-gas, accelerator, and cooling system induced transients.

As discussed earlier, the TOGS maintains pressure in the TSV headspace between -2.0 psig (-13.8 kPa) and 0.0 psig (0.0 kPa). As the pressure is adjusted, it causes a partial void collapse

within the target solution. This leads to a calculated increase in reactivity of less than [ ]PROP/ECI. The k_{eff} of the system remains significantly below that of cold startup conditions due to the large temperature defect present.

Figure 4a2.6-4 shows the stability of the system with pressure fluctuations of 1.5 psig (10.3 kPa) on a one hour period. The peak power increase is [ ]PROP/ECI above the prior steady-state power level. Figure 4a2.6-5 provides the results of the bounding scenario of complete void collapse in the solution for 10 seconds, showing the stability of the system with respect to any void effects.

Design basis accident calculations involving pressure excursions in TOGS related to credible deflagrations are described in Subsection 13a2.1.9.

Neutron driver yield variations are expected to occur. As mentioned in Subsection 4a2.6.1.2, fusion neutron yield could vary from 100 percent to 0 percent due to temporary issues with the accelerator. These accelerator transients result in changes in TSV fission power, and therefore heat generation and radiolytic gas formation. The maximum output change for the accelerator would be a decrease from nominally 100 percent output to 0 percent output. The allowed duration of the transient (neutron driver recovery window) is dependent on the maximum neutron driver source strength. For a driver source strength that would produce a TSV fission power of 125 kW, the allowable driver recovery window is approximately [ ]PROP/ECI. After this time, the neutron driver HVPS breakers will be opened [ ]PROP/ECI to initiate the ramp up. A bounding transient of operation at 125 kW with a 60 second transient to 0 percent power, followed by the accelerator returning to 100 percent output, is shown in Figure 4a2.6-6.

During the decreased accelerator output period, reactivity increases, principally through decrease in radiolytic void. Assuming a steady state starting TSV fission power level of 125 kW, the peak reactivity increase is calculated to be [ ]PROP/ECI. The accelerator is subsequently restored to full neutron output, and peak power during the transient is [ ]PROP/ECI above the initial steady state power (125 kW), but quickly decreases to less than [ ]PROP/ECI over power as the void builds back in to the solution.

Normal decreases of smaller magnitude are allowed to occur for longer time intervals. For example, a 20 percent decrease from 100 percent to 80 percent neutron yield for 80 seconds is shown in Figure 4a2.6-7. The same physical changes within the TSV occur as for the 100 percent to 0 percent transient, but on a lesser scale. Assuming a steady state starting TSV fission power of 125 kW, the peak reactivity increase is calculated to be [ ]PROP/ECI. The accelerator is returned to full power instantaneously, resulting in a peak power of [ ]PROP/ECI above the initial steady state power (125 kW).

During normal operations, the driver is expected to vary around its target neutron yield by up to 10 percent. Those variations produce similar variations in TSV fission power, which are acceptable. Oscillations with higher frequencies (5 second period) and lower frequency oscillations (1 hour period) are presented in Figures 4a2.6-8 and 4a2.6-9, respectively.

During steady state operations, temperatures are stable except for normal PCLS variations described below. Temperature oscillations will occur during induced transients, as described above. For each of the transients, TRIAD calculates the thermal-hydraulic changes in the systems and the resultant temperature feedback on the neutronics as part of the complete

system model. Temperatures are calculated in 10 axial zones. Therefore, the effect of temperature gradients is inherently included in each transient analyzed.

PCLS provides cooling water to the TSV, and therefore, temperature variations in the PCLS directly lead to TSV temperature variations. PCLS temperature in its normal operating range will vary from 59°F (15°C) to 77°F (25°C). A sudden drop in PCLS temperature from 77°C (25°C) to 59°F (15°C) results in a TSV power increase of approximately [ ]PROP/ECI from the previous steady state value for a nominal system. The system passively returns to equilibrium following the event. Figure 4a2.6-10 shows a transient where the temperature began at 68°F (20°C), changed to 77°F (25°C), reached steady state, then changed to 59°F (15°C).

The analyses show that no control rods are required to respond to TSV kinetic behavior and that kinetic behavior is acceptable. The TSV operation and supporting systems allow for controlled operation over the range of possible TSV conditions.

The NFDS provides monitoring of TSV flux levels during transients, and the TRPS initiates an IU Cell Safety Actuation should flux levels exceed predetermined setpoints. Analytical limits for the TRPS are described in Section 7.4.

4a2.6.1.5 Interacting Effects

The main systems and components interacting with the target solution in the IF include the neutron driver, neutron multiplier, TOGS, PCLS, and light water pool.

The neutron driver is a necessary part of the assembly, as it drives the reactions in the system. Having a subcritical assembly means that there would be no appreciable power (medical isotope production) without this external source of neutrons. Operation of the neutron driver in Mode 2 decreases the k_{eff} of the system because of the increase in temperature and void associated with the increase in power of the system. If neutron driver operation is lost due to an abnormal event or when the neutron driver is powered down, the reactivity of the system increases due to the cooling and void collapse within the solution. As stated previously, there is an acceptable delay for neutron driver recovery, after which time the neutron driver is required to ramp up to slowly build back in the negative reactivity, similar to what is done during startup.

The driver recovery window is dependent on the driver maximum operating source strength. For a driver source strength that would produce a TSV fission power of 125 kW, the allowable driver recovery window is approximately [ ]PROP/ECI. After this time, the neutron driver HVPS breakers will be opened until [ ]PROP/ECI to initiate the ramp up.

If the neutron driver target chamber were to be flooded due to a water leak from the driver cooling system or pool water, reactivity is calculated to decrease, moving the system farther from critical. The reactivity change is calculated to be [ ]PROP/ECI in Mode 1 and [ ]PROP/ECI in Mode 2.

The natural uranium neutron multiplier is designed to multiply the 14 MeV fusion neutrons and lower their energy spectrum. A significant fraction of the absorptions in the multiplier results in fission or (n, 2n) reactions that increase the neutron population that would otherwise enter the TSV. The multiplier is designed to last the lifetime of the facility (30 years). Reactivity effects of the neutron multiplier burnup are presented in Subsection 4a2.6.1.3.

Temperature variations of the multiplier affect reactivity. The power generation in the multiplier is related to TSV fission power, as approximately 90 percent of multiplier power is due to TSV fission neutrons. The multiplier average temperature at maximum TSV fission power of 125 kW is calculated to be less than 220°F (104°C), which is a temperature rise of approximately 150°F (80°C) from cold startup conditions. The reactivity effect of this temperature rise is calculated to be less than [ ]PROP/ECI at zero burnup and does not change appreciably over the 30 year life.

The multiplier is contained internal to the subcritical assembly support structure (SASS) pressure boundary but can be removed through the flanged connection to the neutron driver target chamber in the SASS head, when the target chamber is not in place. Should the multiplier develop a leak, the reactivity effect of the multiplier gas space filling with PCLS water was calculated to be [ ]PROP/ECI.

Reactivity effects of the TOGS have been discussed above in Subsection 4a2.6.1.1.

Normal operation of the PCLS serves to cool the target solution, thereby maintaining a high enough reactivity for an effective power level and maintaining target solution within operating limits. If there was a loss of cooling water flow event, reactivity would decrease due to the negative temperature coefficient of the system.

The reactivity changes due to voiding of the PCLS from nominal cooling water temperature and density to a fully voided cooling system have been calculated. Voids were assumed to occur in each of the cooling channels [ ]PROP/ECI of the subcritical assembly. The calculation was performed at cold (Mode 1) startup conditions and hot (Mode 2) irradiation conditions. Results of the calculation are provided in Table 4a2.6-3. The results provided in Table 4a2.6-3 show negligible reactivity impact for small void fractions in the PCLS and a positive reactivity insertion of up to [ ]PROP/ECI from complete voiding of PCLS. With the PCLS including an air separator and no credible way to drain the PCLS during operation, reactivity insertions from PCLS void are negligible. See Section 5a2.2 for information on prevention of PCLS cooling channel voiding.

Along with its function as a heat sink and biological shield, the light water pool serves as a reflector for the subcritical assembly. Note that there is no pumped cooling system for the light water pool. Reactivity decreases significantly with a decrease in light water pool level due to the loss of reflected neutrons.

The reactivity changes due to loss of pool water from a normally filled system to an empty pool have been calculated. The calculation was performed at cold (Mode 1) startup conditions and hot (Mode 2) irradiation conditions. Results of the calculation are provided in Table 4a2.6-4. The results provided in Table 4a2.6-4 show that there is a negative insertion of reactivity as the pool level decreases.

The subcritical assembly and TSV contain mechanical considerations for irradiation ports for production of other medical isotopes (i.e., isotopes not available from the target solution). The system is not currently analyzed for the reactivity effects of introducing samples or targets into these ports; therefore, the ports will not be used except to support neutron measurements during startup testing. They are maintained in a voided condition after startup testing is complete.

4a2.6.1.6 Solution Processing Reactivity Effects

Following normal 5.5 day cycles of irradiation, the solution is processed through the molybdenum extraction and purification system (MEPS) to selectively remove certain elements, including molybdenum. The solution may not be processed for medical isotope extraction between cycles if it is not desired, such as for testing purposes or standby batches.

Less than [ ]PROP/ECI of the overall solution is anticipated to be removed during this stage of processing. Adequate solution is included during the preparation of the target solution batch to accommodate small losses due to isotope extraction, and solution volume can be added as the solution is repeatedly processed. The uranium concentration, pH, and catalyst concentration of the target solution are verified following any solution additions. Adjustments are made to reach the correct values prior to use in the TSV. For more information on solution processing, see Section 4b.1.

Due to the low power of the system and low fission product inventory, selective removal of fission products due to isotope extraction has a minimal effect on system performance and reactivity.

Reactivity changes due to anticipated removal rates and maximum removal rates during solution processing have been calculated. The reactivity effect due to MEPS solution processing is anticipated to be [ ]PROP/ECI relative to no solution processing. Assuming the maximum irradiation cycle length (i.e., 30 days) and the maximum extraction rates, the maximum calculated reactivity effect is [ ]PROP/ECI relative to no solution processing.

Due to the 1/M startup methodology and the 5 percent by volume below critical fill level, the reactivity effects of solution processing are accounted for automatically during the startup process and are acceptable.

4a2.6.1.7 Safety Considerations of Different Core Configurations

Variation of the assembly configuration occurs with changes to the target solution properties, fill height, and TSV headspace pressure. The mechanical components of the subcritical assembly are not movable during operation. The highest reactivity for the system is at cold startup conditions.

There is an operating band for the 1/M curve, allowing for variations in solution chemistry. If the uranium concentration in the target solution is higher than nominal, but still within the operating band, the fill operation is stopped at a lower fill height than the nominal [ ]PROP/ECI fill height. Lower fill heights result in a higher power density, which is still acceptable based on system stability concerns (see Subsection 13a2.1.8).

If the uranium concentration in the target solution is lower than nominal, but still within the operating band, the maximum fill volume may be reached prior to reaching the ideal operating k_{eff}. This results in a lower production rate but poses no safety risk.

The allowable range of fill volumes and corresponding fill heights is provided in Table 4a2.6-5.

In the event of an inadvertent fill of the TSV, TRPS initiates an IU Cell Safety Actuation on high source range neutron flux that is designed to dump the target solution prior to reaching critical. The analytical limit for the source range neutron flux trip is 2.52 times the maximum flux expected

at the end of TSV fill. This is set by the nominal core configuration, which is the most reactive core.

The analytical limit includes consideration for transient neutronics behavior, detector uncertainties, maximum solution fill rate, and delay for opening of the dump valves.

The limiting core configuration is that configuration that yields the highest power densities. The limiting core configuration is at a batch size in the TSV of [ ]PROP/ECI, corresponding to a fill height of [ ]PROP/ECI from the bottom of the TSV. The calculated uranium concentration at this fill height is [ ]PROP/ECI. See Subsection 4a2.6.3.5 for more discussion on the limiting core configuration.

4a2.6.1.8 Calculated Reactivities for TSV Configurations

Calculated k_{eff} values for TSV configurations are provided in Table 4a2.6-6, including the limiting core configuration, which yields the highest possible power density. As shown in the table, k_{eff} for the subcritical assembly remains below 1.0 during operation.

The highest reactivity anticipated is at cold startup conditions, immediately following the filling of the TSV (Mode 1). The k_{eff} for this configuration is approximately [ ]PROP/ECI. During irradiation (Mode 2, Operation), k_{eff} decreases due to the large temperature and void coefficients and is approximately [ ]PROP/ECI at nominal operating conditions. Accordingly, the anticipated range for k_{eff} in the subcritical assembly for TSV configurations is approximately [ ]PROP/ECI.

4a2.6.1.9 Means to Prevent Addition of Positive Reactivity

Reactivity control in the TSV includes the following mechanisms:

- Passive control: TSV dump tank and hold tank are placed physically below the TSV, requiring motive force to move the solution from these tanks into the TSV.
- Passive control: During the fill process, the available pressure head, TSV fill line size, and manual flow control valve that is set and locked in position inherently limit the flow rate of solution from the target solution fill lift tank into the TSV.
- Passive control: Strong neutronics feedback reduces reactivity during operation due to highly negative temperature and void coefficients.
- Active engineered control: Remaining solution in the TSV fill lift tank from Mode 1 (Startup) is drained to the TSV hold tank when not in Mode 1 (Startup).
- Active engineered control: Two TSV fill isolation valves in series are closed and interlocked when system is not in Mode 1 (Startup).
- Active engineered control: Neutron flux detectors and the TRPS initiate dump of TSV and closure of fill valves (for Mode 1) if neutron flux exceeds predetermined flux level setpoint in both Mode 1 (Startup) and Mode 2 (Irradiation).
- Active engineered control: TSV is dumped if PCLS temperature exceeds acceptable limits.
- Active engineered control: The neutron driver is allowed a recovery window to return to full power operation, after which time the HVPS breakers are opened [ ]PROP/ECI to initiate a ramp up, similar to that used at the start of irradiation.

- Administrative control: Measurement and verification of target solution uranium concentration occurs after preparation of a new batch and after making adjustments to an existing batch, prior to the target solution being transferred to the TSV.
- Administrative control: Operators verify correct flux levels during startup process versus procedure-based acceptance criteria.
- Defense-in-depth feature: Once 40 percent of the maximum expected flux is exceeded in Mode 1, TSV fill steps are limited to [ ]$^{PROP/ECI}$ of flow with a 5 minute delay between steps.

See Subsection 13a2.1.2 for discussion on accident events involving insertion of positive reactivity.

4a2.6.1.10 Technical Specifications

Certain material in this subsection provides information that is used in the technical specifications. This includes limiting conditions for operation, setpoints, design features, and means for accomplishing surveillances. In addition, significant material is also applicable to, and may be used for, the bases that are described in the technical specifications.

4a2.6.2 TARGET SOLUTION PHYSICS PARAMETERS

This subsection discusses the TSV physics parameters and addresses the methods and analyses used to determine them.

4a2.6.2.1 Analysis Methods and Code Validation

The nuclear design computer codes used for the nuclear analyses include: Monte Carlo N-Particle Transport Code 5 (MCNP5), MAKXSF, COUPLE, ORIGEN-S, OPUS, SITCCOM, and TRIAD. Each of the codes and their use is described below.

MCNP5, version 1.60, the LANL Monte Carlo radiation transport code is used to calculate various steady-state nuclear physics parameters for the TSV and IU. MCNP5-1.60 is developed and maintained under a configuration management plan by LANL. The code is distributed by the Radiation Safety Information Computational Center (RSICC) (LANL, 2011). Installation of the code is conducted in accordance with the SHINE software quality assurance program. The nuclear physics parameters calculated include neutron and gamma flux, reactivity, dose rates and energy deposition, neutron lifetime, and reaction rates. These values are utilized to calculate parameters such as reactivity coefficients, flux-dependent cross sections, and fission yields for the system.

The ENDF/B-VII.1 cross section libraries are used for all reaction types, except S(alpha,beta). ENDF/B-VII.1 S(alpha,beta) library format is not compatible with MCNP5, so ENDF/B-VII.0 S(alpha,beta) libraries were used.

Verification and Validation (V&V) of MCNP5 for the SHINE nuclear system was performed by comparing to experimental results in benchmark handbooks and scientific literature. The V&V package includes calculations which evaluate the ability of MCNP5 to model the following key nuclear physics phenomena relevant to the SHINE system: reactivity in aqueous homogeneous systems, fast neutron interactions with uranium metal, reactivity changes with changes in temperature, and reactivity changes with changes in materials.

The MCNP5 validation for reactivity in aqueous homogeneous systems compares benchmark experiment k_{eff} values to MCNP5 calculated k_{eff} values. This calculation used over 120 cases from aqueous homogeneous benchmarks, to determine that MCNP5 can model aqueous homogeneous systems, such as SHINE's TSV, acceptably. The calculated bias and bias uncertainty in k_{eff} is not used for TSV subcriticality determination, but is used for subcriticality determination in the TSV dump tank and TSV off-gas system. This is discussed further in Subsection 4a2.6.2.6.1.

The MCNP5 validation for neutron interactions in uranium metal used benchmarks for fast neutron systems containing natural or depleted uranium metal and literature information on experiments with a deuterium-tritium (DT) fusion neutron source in uranium metal spheres to evaluate how closely MCNP5 models the shift in energy spectrum as neutrons move through the material. Calculated reactivities and nuclear reaction rates through the material were compared to the experimental results. Reactivity results showed similar bias and bias uncertainty to the validation for reactivity in aqueous homogeneous systems, and the shape of graphs for reaction rates through the assemblies for the DT experiments matched closely between calculation and experiment, validating that MCNP5 is accurately modeling reactions in the neutron multiplier.

The validation for reactivity changes with changes in temperature generates a two-sided tolerance band, with 95 percent confidence that 95 percent of the values would fall within, for temperature coefficients of reactivity calculated with MCNP5. This is discussed further in Subsection 4a2.6.2.6.

The validation for reactivity changes with changes in materials evaluates benchmarks that incorporate changes in uranium concentration and water reflection. Cases are evaluated and a two-sided tolerance band, with 95 percent confidence that 95 percent of the values would fall within, developed from these results is used to quantify uncertainty on reactivity changes related to material densities, such as the void coefficient of reactivity, solution worth, and the water loss coefficient of reactivity. This is discussed further in Subsection 4a2.6.2.6.

MAKXSF, provided with MCNP5, is used to prepare S(alpha,beta) tables at intermediate temperatures relevant to the SHINE system. S(alpha,beta) tables are used for improved thermal scattering treatment of neutrons in MCNP5 calculations. MAKXSF was qualified for use under SHINE's software quality assurance program.

COUPLE, a module of the larger SCALE (Standardized Computer Analyses for Licensing Evaluations) version 6.1 computational system from Oak Ridge National Laboratory (ORNL), is used to generate flux-dependent cross sections and fission yields for the SHINE subcritical assembly using the flux profiles calculated by MCNP5. As part of the larger SCALE computational system, the COUPLE code is developed and maintained under a configuration management plan by ORNL. The code is distributed by the RSICC.

ORIGEN (Oak Ridge Isotope Generation)-S, a module of the larger SCALE version 6.1 computational system from ORNL, is used to generate radionuclide concentrations and activities following various irradiation and decay intervals for the subcritical assembly components, target solution, and accelerator components. As part of the larger SCALE computational system, the ORIGEN-S code is developed and maintained under a configuration management plan by ORNL. The code is distributed by the RSICC.

OPUS, a module of the larger SCALE version 6.1 computational system from ORNL, is used as a post-processing utility for ORIGEN-S. OPUS was used to output ORIGEN-S results. A standard list of over 400 isotopes was developed, which included isotopes important to dose calculations, process evaluation, and waste classification. Requested output for these isotopes included curies, grams, watts, and the gamma spectra at key times. As part of the larger SCALE computational system, the OPUS code is developed and maintained under a configuration management plan by ORNL. The code is distributed by the RSICC.

COUPLE, ORIGEN-S, and OPUS were qualified through the SCALE installation process, conducted in accordance with the SHINE software quality assurance program.

Coupling of the MCNP5 results and the ORIGEN-S results is performed using the SHINE computer code SITCCOM (SHINE Isotope Tracking Code Coupling ORIGEN and MCNP). SITCCOM automates data transfer between MCNP5, SCALE, and COUPLE. SITCCOM performs no physics calculations and only transfers data to improve efficiency of the analysis process and reduce human error potential. SHINE performed V&V on SITCCOM through SHINE's software quality assurance program.

Transient analyses are performed using the SHINE computer code TRIAD, which is an extension of the LANL-developed dynamic system simulation tool (LANL, 2013a; LANL, 2013b; LANL, 2014a; LANL, 2014b). TRIAD calculates the integrated system response of the SCAS, TOGS, neutron driver, and PCLS. From the LANL code, SHINE added capability to the code, adjusted it to match SHINE subcritical assembly parameters, and performed in-house V&V of the completed code.

The TRIAD code has the following capabilities:

- Calculates total system reactivity
- Calculates heat transfer from target solution to cooling channels and impact on system reactivity
- Calculates hydrogen and oxygen created from radiolysis and impact on system reactivity
- Calculates total system power and axial temperature distribution
- Allows user to specify accelerator neutrons vs. time
- Allows user to specify perturbations in reactivity due to a given event
- Allows user to insert reactivity equal to negative reactivity caused by void (void collapse calculation)

The TRIAD code is matched to SHINE subcriticality assembly parameters with the following inputs:

- Geometry of target solution vessel, cooling channels, [ ]PROP/ECI
- Axial neutron importances per zone
- Axial fission fractions per zone
- Nuclear parameters of beta fraction and prompt neutron lifetime
- Table of reactivity vs. temperature and void fraction
- Flow and temperature of cooling channels versus time
- Production rate of radiolysis gases
- Bubble transit speed
- Heat capacities and densities of structural materials that transfer heat

- Input for specific transient calculation including reactivity perturbations, changes to coolant, changes in neutron source, and any system failures

V&V of the TRIAD code was performed with a series of methods. The verification of TRIAD was performed with a combination of unit tests, system tests, and code review. The verification checked the performance of the TRIAD code and assured that each requirement in the requirements document was successfully implemented.

- Unit Tests: New coding that was added to the original software included a unit test suite that is run as part of the final V&V. This assures that all inputs are being interpreted by the software correctly.
- System Tests: To test the original LANL code and the new code, a significant portion of the verification was performed with system tests. These tests consisted of creating TRIAD input, running, and comparing to expected results. System tests checked the calculation of different physical formulas against the source formulas and hand calculations.
- Code Review: In some limited cases, the formula used for a calculation is complex enough that it needed to be checked explicitly with a code review. In this case, the formulas were compared to the approved formulas. This was the case for calculations of the transfer of heat from the target solution to the coolant loops and the mass transfer of the solution. The code review checked elements that were not explicitly checked during unit and system tests.

The validation of TRIAD was performed using historical nuclear physics data that was selected following an extensive review of available literature. TRIAD was validated against two models: (1) Silene; and (2) Kinetics Experiments on Water Boilers (KEWB), core B-5. Silene was an annular reactor, while KEWB core B-5 was cylindrical. Each validation experiment exercised the same methods as the SHINE system, including:

- Determining kinetics coefficients using MCNP,
- Inputting geometry and kinetics coefficients into TRIAD,
- Inputting run conditions into TRIAD, and
- Running and comparing results to physical data collected.

The Silene and KEWB validation runs showed that the overall TRIAD code produces acceptable results for solution reactors and can successfully model transient behavior in the SHINE subcritical assembly.

4a2.6.2.2 Neutron Lifetime and Effective Delayed Neutron Fraction

The effective delayed neutron fraction, β_{eff}, for the system is calculated with MCNP5 and the ENDF/B-VII.1 cross section data. This is done by calculating the prompt neutron fraction in the system and subtracting it from 1. For unirradiated solution, the delayed neutron fraction is calculated to be 0.0072. For solution at the end of [ ]$^{PROP/ECI}$ of irradiation, the delayed neutron fraction is calculated to be 0.0073. These values are typical for thermal U-235 fission systems.

MCNP5 directly calculates prompt neutron lifetime. The prompt neutron lifetime for the system is calculated as [ ]$^{PROP/ECI}$ for unirradiated solution, and
[ ]$^{PROP/ECI}$ at end of solution life.

4a2.6.2.3 Axial and Radial Distributions of Neutron Flux Densities

The axial and radial distributions of neutron flux densities are calculated using MCNP5 for expected core configurations. MCNP5 has been validated for this use as discussed in Subsection 4a2.6.2.1.

The nominal uranium concentration is approximately [ ]PROP/ECI. The limiting core configuration is discussed in Subsection 4a2.6.3.5.

Figure 4a2.6-11 provides axial flux densities for the limiting core configuration and the nominal core configuration. As shown in the figure, for the limiting core configuration the peak flux density is [ ]PROP/ECI and the average flux density is [ ]PROP/ECI. Figure 4a2.6-12 provides radial flux densities for the limiting core configuration and the nominal core configuration.

The flux distributions are a function of power level. At higher power levels, greater void fractions in the upper portions of the solution leads to the flux and power peaks shifting slightly downwards since uranium density is decreased in the upper portion of the core. Burnup has a negligible effect on flux and power distributions within the assembly.

The nominal core and the limiting core configuration both have a peak-to-average value for flux and power density of approximately [ ]PROP/ECI. Temperature and void fractions are discussed in Section 4a2.7.

Calculations show that the neutron energy spectrum for the subcritical assembly has spatial variance from the inner to outer radius, with a predominantly fast spectrum in the tritium target chamber and neutron multiplier shifting to a predominantly thermal spectrum in the TSV target solution. Figure 4a2.6-13 provides radial distribution of the fast, epithermal, and thermal neutron spectrums for the nominal core configuration at 125 kW.

4a2.6.2.4 Coefficients of Reactivity

Coefficients of reactivity have been calculated using MCNP5, by calculating the k_{eff} value of the system, perturbing the parameter of interest, and calculating a new k_{eff} value. The coefficients are calculated as the ratio of the change in reactivity (in pcm) to the change in the parameter of interest.

The nominal uranium concentration is approximately [ ]PROP/ECI. The limiting core configuration is discussed in Subsection 4a2.6.3.5.

The temperature coefficient of reactivity at nominal uranium concentrations is calculated to be [ ]PROP/ECI during Mode 1 (startup) and [ ]PROP/ECI during Mode 2 (irradiation).

The temperature coefficients of reactivity for the core configurations range from [ ]PROP/ECI. The temperature coefficient becomes more negative with higher target solution temperature.

Burnup has minimal effect on the target solution reactivity coefficients due to the low power density of the solution and frequent extraction of radionuclides for medical isotope production.

For the limiting core configuration, the temperature coefficient is calculated as [ ]PROP/ECI at 20°C at beginning of solution life. The change in temperature coefficient between the beginning and the end of the solution life is within the uncertainty of the calculational method, discussed in Subsection 4a2.6.2.6.

The multiplier temperature coefficient at beginning of life is calculated to be [ ]PROP/ECI. The change in multiplier temperature coefficient over the 30 year life is within the uncertainty of the calculational method, discussed in Subsection 4a2.6.2.6.

The temperature coefficient of the PCLS is calculated to be [ ]PROP/ECI. The PCLS does not operate near boiling temperature; therefore, voiding is not expected. Subsection 4a2.6.1.5 discusses reactivity effects of voiding of the PCLS if it were to occur.

The temperature of the light water pool does not have a statistically significant effect on the reactivity of the subcritical assembly due to the isolating effect of the outer PCLS cooling channel and the relatively narrow operating temperature band of the light water pool.

The void coefficient of reactivity in the nominal core configuration is calculated to be [ ]PROP/ECI and was determined to be independent of temperature and power. The void coefficient is [ ]PROP/ECI in the limiting core configuration. The void coefficient becomes slightly less negative with higher uranium concentration cores.

The power coefficients of reactivity for the nominal and limiting core configurations are shown in Figure 4a2.6-14 for powers ranging from 25 kW to 125 kW at target solution at beginning-of-life. Burnup does not have a statistically significant impact on the power coefficients for end-of-life target solution.

As water is lost to evaporation and radiolysis, a portion is held up in the TOGS system. The water inventory reactivity coefficient for the nominal uranium concentration core is [ ]PROP/ECI.

Uncertainties in the calculational methods are discussed in the following subsections.

The target solution void, target solution temperature, and power coefficients of reactivity are highly negative over the range of operating conditions and core configurations. The power coefficient includes the combined effects of target solution temperature and void coefficients and shows the strong negative feedback inherent to the system. Due to the nature of the aqueous system, the majority of heat is directly deposited in the target solution and leads to significant uranium density decrease due to void and thermal expansion, leading to the rapid void and temperature feedback.

This analysis, along with the accident analysis in Chapter 13, shows that the combined temperature, void, and power reactivity coefficients are sufficiently negative over the anticipated operating conditions to prevent damage to the PSB and risk to the public from subcritical assembly transients.

4a2.6.2.5 Method for Calculating and Validating Burnup

Burnup of the target solution will be calculated from accumulated target solution power history data from PICS. Power history is collected by the PICS as a result of continuous neutron flux

detection readings. The neutron flux detection readings are calibrated to the thermal fission power of the system, as described in Section 12.11. Target solution power history is then converted to effective full power operating time of the target solution batch.

The fraction of an effective full power day (EFPD) is calculated as:

Fraction of EFPD = Daily average TSV fission power (watts)/125,000 watts

The burnup is validated through computations of Mo-99 production, and production of other fission products, as necessary. This data is accumulated during measurements as part of the medical isotope extraction process. Fission product yields are compared to calculated yields and discrepancies are investigated and resolved.

4a2.6.2.6 Uncertainty Considerations for the Reactivity Worths, Coefficients, and k_{eff} Values

Steady state reactivity worths, coefficients, and k_{eff} values are calculated using MCNP5.

Calculations were performed using MCNP5 for calculating temperature coefficients of reactivity in thermal neutron systems, including the SHINE TSV. Benchmark model calculations using MCNP5 were compared with experiment values from the International Handbook of Evaluated Reactor Physics Benchmark Experiments (IRPhE) (NEA, 2014a) and the International Handbook of Evaluated Criticality Safety Benchmark Experiments (ICSBEP) (NEA, 2014b) to determine the level of uncertainty in temperature coefficients of reactivity calculated using MCNP5 for comparable systems. A two-sided confidence interval was developed using conservative assumptions.

The calculations show there is a 95 percent confidence that at least 95 percent of the MCNP5 results for the temperature coefficient of reactivity exhibit the following difference from experimental results:

[$-4\ \text{pcm}/^{\circ}\text{C} < C - E < 6\ \text{pcm}/^{\circ}\text{C}$]PROP/ECI

Where:

- $C - E$ is the calculated value less the experimentally-determined value.

Therefore, a temperature coefficient of reactivity calculated at [ ]PROP/ECI is expected to be between [ ]PROP/ECI.

Additional calculations were performed using MCNP5-1.60 to validate calculated reactivity changes due to changes in materials for thermal neutron systems. The changes in material include voiding of the target solution, solution worth, target solution water loss, and voiding in the cooling system. Benchmark model calculations using MCNP5-1.60 were compared with experiment values from the IRPhE and the ICSBEP to determine the level of uncertainty in reactivity changes calculated using MCNP5-1.60.

There is 95 percent confidence that at least 95 percent of the MCNP5 results for reactivity effects of material changes exhibit a fractional difference from experimental results that fall in this tolerance band:

$$[(-24 \text{ percent}) < \frac{C-E}{\Delta\rho T} < 18 \text{ percent}]^{PROP/ECI}$$

Where:

- $C-E$ is the calculated reactivity less the experimentally-determined value.
- $\Delta\rho T$ is total calculated change in reactivity. (C)

The ratio of $C-E$ to $\Delta\rho T$ is the fractional difference between calculation and experiment. This result is applicable for water loss reactivity coefficients, solution voiding (void fraction) coefficients, solution worth coefficients, and cooling system voiding coefficients.

For example, a target solution voiding coefficient calculated at [ ]$^{PROP/ECI}$ is expected to be between [ ]$^{PROP/ECI}$.

The uncertainty of reactivity coefficients and reactivity worths will be verified acceptable during startup testing as described in the startup plan (see Section 12.11).

For k_{eff} calculations, the MCNP5 code and other neutronics codes contain an overall bias error, which results in absolute k_{eff} predictions deviating from actual system k_{eff}.

Bias in the calculations is a systematic error due to uncertainties and approximations in the models and methods inherent to MCNP5 (e.g., thermal scattering treatment), uncertainties in the input data (e.g., cross section data), and approximations and uncertainties in the user input (e.g., simplifications of geometry, material composition uncertainties). MCNP5 calculations have been performed to compare the code against benchmark aqueous systems, and SHINE's review of the benchmark data has found that a bias and bias uncertainty as described below in Subsection 4a2.6.2.6.1. SHINE uses this bias and bias uncertainty for calculating dimensions required for the TSV dump tank and TOGS, which is appropriate for these systems, as the code is being used to predict the absolute k_{eff} and the actual margin to criticality of these systems is not measured (i.e., criticality safety relies on the calculations).

Reactivity control in the subcritical assembly does not rely on the bias and bias uncertainties. SHINE does not use the absolute k_{eff} predictions from MCNP to ensure subcriticality. Instead, SHINE uses the neutron source multiplication method during each startup, multiple administrative controls, and an engineered protection based on high flux.

The neutron source multiplication method, which is equivalent to the 1/M methodology, is used to terminate the fill process below critical. For a wide variety of assemblies, including uranyl sulfate systems, as the system approaches criticality and highly multiplying configurations are achieved, source, counter, and geometry effects become relatively small and a good estimate of criticality is obtained by the 1/M method.

The fill process is normally stopped at 5 percent by volume below critical. Given the range of acceptable TSV fill volumes, 5 percent by volume below critical is equivalent to [ ]$^{PROP/ECI}$ below critical. This volume margin will be increased based on the mass of water expected to be held up by TOGS during an irradiation cycle.

The subcritical multiplication source location is described in Subsection 4a2.2.4. SHINE's detector, source, and subcritical assembly geometry result in conservative 1/M shapes (tailing

out shape (Clayton, 1985)). This ensures that early predictions of critical volume are lower than the actual critical volume and result in lower actual k_{eff} values.

Uncertainty in critical volume for SHINE's normal approach to critical is a combination of instrumentation and system design parameters. To calculate the uncertainty in the critical volume during a normal startup following the 1/M process, the following assumptions are made:

- Detector uncertainty of 2 percent
- Level measurement uncertainty of 0.3 percent
- Minimum volume between 1/M points of 5 L

The uncertainty in the prediction of critical volume of the subcritical assembly using the 1/M method is estimated to be less than [ ]$^{PROP/ECI}$ for the nominal core and [ ]$^{PROP/ECI}$ for the limiting core.

The reactivity worth of that solution addition is calculated by MCNP5 and validated during startup physics testing. The calculational uncertainty in the worth of that solution addition is described above in this section.

TRPS high source range flux trip setpoints for Mode 1 are determined in accordance with requirements in Subsection 4a2.6.2.7. The TRPS high source range flux trip setpoints provides an engineered control to initiate dumping of the target solution to the TSV dump tank prior to exceeding any allowable limits in anticipated transients and postulated accidents. Normal operating procedures and administrative controls provide the first barrier to maintaining a subcritical system, as described in Subsection 4a2.6.2.7.

The facility startup physics testing confirms that reactivity coefficients, worths, and k_{eff} predictions are within the expected uncertainties. Estimates of reactivity parameter uncertainties from the startup plan must be bounded by those used for the determination of safety limits or trip setpoints, or if not, they are specifically evaluated for their effect on safety. Following completion of the startup plan, target solution uranium concentration is adjusted based on the startup testing results (see Section 12.11).

Due to the statistical nature of MCNP5, results from MCNP5 also contain a statistical error. This statistical error is included in calculations of bounding and analytical limits, and is generally small in comparison with other sources of error.

4a2.6.2.6.1 Uncertainties in k_{eff} Values Relying on MCNP Calculation

The TSV dump tank and TOGS are designed to ensure that any target solution contained within them is sufficiently shutdown. The TSV dump tank and TOGS k_{eff} values are directly calculated by MCNP5.

These direct calculations of k_{eff} account for the bias and bias uncertainty of MCNP5, a subcritical margin of 0.06 Δk, and uncertainty in MCNP5's statistical analysis, as described below.

The MCNP bias and bias uncertainty was evaluated using greater than 120 critical and near-critical benchmark data points. The benchmark data points were selected based on applicability to the SHINE uranyl sulfate solution system. Using the results of the benchmark calculations, an average k_{eff} is calculated, weighted by the combined calculated and experimental uncertainties.

The difference between the weighted average k_{eff} and 1 is the bias. The bias is calculated using the methodology in Section 2.4.1 of NUREG/CR-6698, Guide for Validation of Nuclear Criticality Safety Calculational Methodology (NRC, 2001b).

For conservatism, positive bias (i.e., where MCNP is found on average to over-predict k_{eff}) is assumed to be zero for the purposes of determining TSV dump tank and TOGS reactivity.

Bias uncertainty is calculated based on the pooled variance of the data used to calculate the bias and a one-sided tolerance factor. The bias uncertainty is calculated using the methodology described in Section 2.4.1 of NUREG/CR-6698 (NRC, 2001b).

MCNP statistical uncertainty is accounted for in the calculation by adding two times the standard deviation in k_{eff} reported by MCNP ($\sigma_{keff,MCNP}$) to the k_{eff} reported by MCNP ($k_{eff,MCNP}$).

The TSV dump tank and TOGS are designed to a k_{eff} value of less than 0.94 at the most credible reactive uranium concentration and at cold conditions. Reactivity analysis for the TSV dump tank and TOGS satisfies the following inequality:

$$k_{eff,\,MCNP} + 2\,\sigma_{keff,\,MCNP} \leq K_L - 0.06 - \Delta A0A$$

Where:

- K_L is the weighted single-sided lower tolerance limit.
- $\Delta A0A$ is an additional margin of subcriticality that may be necessary as a result of extensions to the area of applicability.

Both of these values are determined following the methodology of Section 2.4.4 of NUREG/CR-6698 (NRC, 2001b). K_L includes the effects of bias and bias uncertainty.

The methodology ensures with a high degree of confidence that the target solution is safely shut down by appropriately accounting for uncertainty in MCNP and providing margin to criticality.

See Subsection 4a2.6.3.4 for detailed discussion on TSV dump tank subcriticality.

See Section 4a2.8 for detailed discussion on TOGS subcriticality.

4a2.6.2.7 Trip Requirements to Limit Reactivity in Mode 1

In conjunction with the additional engineered and administrative controls described below, the limiting trip setpoint for TRPS high source range neutron flux signal is designed such that during normal operation and anticipated transients, the subcritical assembly k_{eff} remains below 1.0.

Anticipated transients in the subcritical assembly are described in Subsection 4a2.6.3.3. Postulated accidents that could add reactivity to the system are described in Subsection 13a2.1.2.

The trip setpoint is set to ensure a trip occurs prior to exceeding a percentage above the normal startup flux as measured by the neutron detection system, per the equation below:

High Flux Mode 1 Trip Setpoint ≤ Mode 1 Trip Factor (M1TF) *
Normal Startup Count Rate (NSCR)

The NSCR is the lowest expected steady-state count rate that would occur during a startup at nominal conditions. NSCR is calculated in the startup plan (see Section 12.11). It is calibrated to be the count rate at nominal conditions, which are defined as:

- At least 5 percent below critical volume
- Uranium concentration that results in expected critical volume of less than or equal to [ ]PROP/ECI in the TSV
- Temperatures stable in the PCLS

The setpoint calculation accounts for uncertainties in calculated parameters (such as delayed neutron fraction and prompt neutron lifetime).

The M1TF is defined through calculation and specified in the technical specifications. Transient analysis has been performed that shows that the high source range neutron flux as defined above prevents reaching k_{eff} of 1.0 for the following analyzed conditions:

- Maximum uranium concentrations that would yield a fill height within the allowable range
- Maximum TSV cooling rate within the range of the PCLS temperature trip limits
- Maximum rate of water holdup by the TSV off-gas system

The most limiting M1TF has been found for the range of anticipated transients. For recent or ongoing reactivity insertions, such as solution filling, fluxes will be lower than steady-state fluxes due to delayed neutron effects. Solution fill rate in the SHINE system is physically limited to [ ]PROP/ECI, specifically to reduce this effect (see Subsection 4a2.6.1.9 for additional solution fill rate and timing limitations).

The most limiting reactivity insertion transient event is that of an inadvertent fill. The conditions for this event are:

- Uranium concentration of [ ]PROP/ECI
- A constant limiting cooldown caused by a 18°F (10°C) delta temperature between target solution and cooling channels
- Limiting delayed neutron fraction and prompt neutron lifetimes

The inadvertent fill accident scenario results in the most limiting M1TF.

The TRPS trip setpoints actuate such that the system does not reach k_{eff} = 1.0 in this event. The analysis shows that the system remains more than [ ]PROP/ECI below critical volume in the analyzed event considering reactivity from cooling driven by a limiting constant 18°F (10°C) temperature difference applied during the entire fill process.

4a2.6.2.8 Dynamic Behavior Due to Radiolytic Gases

Transient analyses has been performed using the SHINE computer code TRIAD, which includes calculations of the dynamic behavior of void fraction in the subcritical assembly. The computer code is an extension of a dynamic system simulation tool developed at LANL. The TRIAD code is described in more detail in Subsection 4a2.6.1.4.

Radiolytic gas bubbles are formed within the target solution due to the decomposition of water into hydrogen and oxygen. These bubbles migrate to the surface of the solution, and the gases are recombined by the TOGS. The hydrogen and oxygen gas production rate in the TSV is provided in Subsection 4a2.2.1.5.

Radiolytic gas bubbles affect reactivity by introducing an equivalent void volume, which moves fissile solution from regions of higher reactivity worth to regions of lower reactivity worth and causes solution expansion, which increases neutron leakage. The result is that the k_{eff} and total power of the target solution is decreased. The formation of gas molecules is proportional to the power deposition and, accordingly, is spatially-dependent. TRIAD contains 10 axial zones which track the production and transport of gas bubbles through the target solution.

Transient analysis has been performed on the behavior of the system due to changes in void fraction because of radiolytic gas formation and the transport of bubbles to the target solution surface. As this behavior is incorporated in the normal TRIAD calculation process, this analysis is included in the results of the discussions on off-gas, accelerator, and cooling system induced transients in Subsection 4a2.6.1.4.

TRIAD does not account for the agglomeration or growth of radiolytic gas bubbles as they rise to the surface. Instead, a constant bubble size is employed during the calculation. This constant bubble size is appropriate because SHINE has investigated effects from a wide range of bubble sizes to ensure safety considerations from dynamic effects are captured appropriately.

SHINE has analyzed a range of average bubble speeds, from approximately [ ]PROP/ECI. Assuming this is their terminal velocity, this corresponds to bubble sizes of approximately [ ]PROP/ECI for 140°F (60°C) target solution in the discussions below. Three representative scenarios are calculated which have significant effects due to void fraction: void collapse, normal startup, and accelerator cutout. These analyses show that bubble sizes have a significant effect on power of the assembly due to the change in average void fraction; however, the assembly remains stable and safe through the analyzed transients.

As there is no significant power or void fraction during Mode 1 operations, bubble size variations do not affect Mode 1 transients.

An analysis was performed assuming complete collapse of void fraction of the TSV for the anticipated range in average bubble size. The results are presented in Figure 4a2.6-15. Results are provided for the limiting core condition. As shown in the figure, power is calculated to increase by approximately [ ]PROP/ECI depending on bubble sizes. Reactivity remains subcritical due to the remaining temperature defect in the solution. Note that the TRPS would initiate an IU Cell Safety Actuation on any flux levels that exceeded the setpoints.

A normal startup of the assembly across the anticipated range of average bubble sizes is presented in Figure 4a2.6-16 for the nominal core configuration. As is shown in the figure, behavior of the systems is the same until hydrogen and oxygen reach limiting concentrations in solution and bubbles begin forming. Then, the smaller bubbles lead to greater void fraction, lower reactivity, and lower power levels. The final power produced for the range of average bubble

sizes ranges from approximately [ ]PROP/ECI to 125 kW. The startup process is not adversely affected by the range of bubble sizes.

Accelerator dropout has been evaluated across the anticipated range of average bubble sizes for 1, 10, and 60 seconds for nominal conditions. In all cases, the reactivity increased after the accelerator shut off due to void leaving the solution and the solution temperature reducing. For the 60 second dropout, after the accelerator returns to service, the peak power exceeds steady state power by approximately [ ]PROP/ECI for this range of bubble sizes. A plot of system power versus time for a 60 second dropout is shown in Figure 4a2.6-17.

In all of these scenarios, the range of bubble sizes and void fractions significantly affects fission power, but the system does not exhibit unbounded oscillatory behavior or unstable operation due to the bubble size variation. There is no adverse effect on safe assembly operation due to bubble growth and agglomeration.

4a2.6.2.9 Technical Specifications

Certain material in this subsection provides information that is used in the technical specifications. This includes limiting conditions for operation, setpoints, design features, and means for accomplishing surveillances. In addition, significant material is also applicable to, and may be used for the bases that are described in the technical specifications.

4a2.6.3 OPERATING LIMITS

This subsection addresses the nuclear design features necessary to ensure safe operation of the TSV and safe shutdown of the subcritical assembly from any operating condition. Potential accident scenarios, as distinct from normal operation, are discussed in Chapter 13.

The maximum reactivity of the subcritical assembly is dependent on the limits of the reactivity coefficients and related parameters as described below.

4a2.6.3.1 Reactivity Conditions for TSV

The limiting core configuration and nominal core configuration k_{eff} values are provided in Table 4a2.6-6 for Modes 1, 2, and 3. The limiting core configuration produces the highest possible power density, and is described in Subsection 4a2.6.3.5. The reactivity is negative (i.e., $k_{eff} < 1$) in both configurations, and there are no control rods or other reactivity control mechanisms in the core.

4a2.6.3.2 Operational Requirements for Reactivity Conditions

Typical reactors operate with excess reactivity. Excess reactivity is that positive reactivity that would be present if all control rods, burnable poisons, and boric acid were removed from a system. While reactors normally have engineered reactivity control mechanisms and then load excess reactivity into the core to accommodate power defect, fuel burnup, and uncertainty in k_{eff}, the SCAS is designed to operate without excess reactivity.

The SCAS is loaded in the cold state with only an amount of fissile material that brings the device to a sufficiently high subcritical multiplication factor for the production of medical isotopes. Power defect due to heat up, void production, and fission product poisons during operation decreases

reactivity with no engineered reactivity insertion to compensate for this decrease. The reactivity effects due to burnup are accounted for in the analysis and small due to the inherent adjustment of the reactivity with each 1/M startup process.

The negative reactivity of the system is dependent on the reactivity coefficients and other system parameters. These coefficients and parameters include: the value of the temperature coefficients of reactivity, cycle length and burnup, void coefficients, water loss coefficient, total water holdup in the TOGS, fission product poisons, and effects of target solution processing. The power coefficient of reactivity is a combination of the temperature and void fraction coefficients of reactivity and is not a standalone requirement. No experiments are performed with the SCAS; therefore, there are no reactivity effects from experiments.

Temperature Coefficient

The temperature coefficient of reactivity affects reactivity changes at startup, reactivity decrease that is incurred during irradiation, and the reactivity effects that occur during transients. When calculating the maximum reactivity during a transient event, the evaluations determine whether more negative or less negative temperature coefficients produce bounding k_{eff} values (i.e., higher reactivity results). The bounding coefficient is then used to produce the results.

The temperature coefficients of reactivity are a strong function of temperature for the subcritical assembly over the analyzed temperature range of 59°F (15°C) to 200°F (93°C) average temperature. The temperature coefficient of reactivity band is shown in Figure 4a2.6-18 which provides temperature coefficients as a function of average solution temperature. The values in Figure 4a2.6-18 include the uncertainties derived from the MCNP5 validation described in Subsection 4a2.6.2.4. Temperature coefficients were found to be not significantly dependent on void fraction over the range of 0 percent to 5 percent average void fraction or uranium concentration over the allowable uranium concentration range.

Cycle Length and Burnup

While small, the reactivity loss from burnup is automatically compensated for during each TSV fill due to the 1/M fill process. The nuclear calculations have evaluated bounding cycle lengths when evaluating safety considerations affected by cycle length.

The safety basis radionuclide inventories are calculated assuming the cycle length of any single irradiation does not exceed 30 days, with a minimum of [ ]$^{PROP/ECI}$ of decay prior to transitioning from the IF to the RPF, and a minimum total decay between cycles of [ ]$^{PROP/ECI}$. The target solution burnup for a batch is limited to less than [ ]$^{PROP/ECI}$ effective full power days (EFPDs). No credit to burnup is taken for periodic solution makeup or chemical adjustment processes to a batch. Target solution use outside of these assumptions, such as shorter decay periods for low power irradiations, will be evaluated to ensure that the potential radiological dose consequences of the radionuclide inventory do not exceed those of the safety basis radionuclide inventory.

Void Coefficients of Reactivity

During irradiation, radiolytic gas formation creates voids in the solution. As the gas migrates out of the target solution, it is swept into the TOGS. The total amount of gas contained within the solution leads to a reactivity defect in the solution during operation. This defect is related to the

total void fraction (as discussed in Subsection 4a2.6.1.2) and the void coefficient of reactivity. The potential reactivity increase during void collapse or pressure changes is directly related to the magnitude of the void coefficient of reactivity.

The void coefficient of reactivity was found to not significantly depend on temperature of the solution between 50°F (10°C) and 210°F (99°C) average temperature or void fraction between [ ]PROP/ECI average void fraction. The void coefficient of reactivity was found to have minor dependence on the core configuration. The void coefficient of reactivity is required to be within [ ]PROP/ECI for any core configuration. These values include the uncertainties derived from the MCNP validation described in Subsection 4a2.6.2.6.

Water Loss Coefficients of Reactivity and Water Holdup in TOGS

The reactivity of the subcritical assembly increases as water evaporates from the target solution and as water is lost due to radiolysis. The TOGS condenses evaporated water and recombines water lost due to radiolysis, returning this water to the TSV. The magnitude of the water loss coefficients and the amount of water held up in the TOGS is important to the reactivity in the TSV.

The water loss coefficients have been calculated for differing core configurations, void fraction, and temperatures. The water loss coefficients were found to be independent of temperature over the range of 68°F (20°C) and 176°F (80°C) average temperature and void fraction over the range of 0 percent to 5 percent average void fraction.

The water loss coefficients must be within [ ]PROP/ECI for any core configuration. These ranges include consideration for the uncertainties derived in the MCNP validation described in Subsection 4a2.6.2.6.

The water holdup in TOGS is expected to be approximately 0.7 gal (2.5 L).This has been analyzed through calculations of the film thickness on surfaces and water retention points within the TOGS system. Actual water loss will be less than the calculated value as the TOGS system is not expected to be completely dry at the beginning of any run.

As removing water from the target solution increases reactivity, the volume margin to critical will be adjusted during Mode 1 to compensate for the expected increase. Table 4a2.6-7 provides the maximum additional volume margin required as a function of water holdup in TOGS. These values are bounding for all core configuration and include the uncertainties derived from the MCNP validation described in Subsection 4a2.6.2.6.

Fission Product Poisons

Fission product poisons accumulate in the solution during the irradiation process. Fission products are not removed for reactivity control, although radioactive gases naturally escape the solution and the medical isotope separation process incidentally removes some additional fission products.

The two fission products that have the largest effect on the system are Xe-135 and Sm-149. The worth of these fission product poisons are small in comparison to the nominal temperature and void defects when at full power. The effects of xenon and samarium have been evaluated on the

startup process and the irradiation process, and the poisons do not have the potential to lead to reactivity insertion events that could affect the integrity of the PSB.

The xenon gas will partition between the liquid and gas space of the system. As xenon is a reactivity poison, higher reactivities are obtained by assuming it leaves the target solution. It is calculated that approximately [ ]PROP/ECI of the xenon will remain in the target solution during irradiation. For calculating limiting reactivity values in Subsection 4a2.6.2.4, it is assumed that no xenon is present in the solution at beginning-of-life or end-of-life. This bounding low value results in higher than actual reactivity values.

Samarium is partially removed by the medical isotope separation processes. The expected removal fraction of samarium ranges from [ ]PROP/ECI during molybdenum extraction. Samarium has a low reactivity worth change during an irradiation cycle. The Sm-149 worth change per cycle due to build-in is up to [ ]PROP/ECI. This causes a slight decrease in production during the irradiation cycle, but does not affect safety of the system.

Samarium accumulates during the solution lifetime. Given the range of samarium removal rates, the accumulated samarium worth at end of solution life is between [ ]PROP/ECI. An increase in the removal of samarium from one cycle to the next due to an increase in the removal rate during processing would increase reactivity worth of the target solution. The reactivity worth change of the solution would be automatically accounted for during the 1/M fill process due to a lower projected critical volume and resulting decrease in fill height of the system. However, this would not negatively affect the safety of the system. The reactivity protection limits are designed to protect the PSB based on target solution over the range of burnup (i.e., from new solution to [ ]PROP/ECI irradiated solution). Therefore, Sm-149 removal during processing and build-in during irradiation are accounted for in the design and do not pose reactivity restrictions on the system.

There are no operational requirements with regards to Xe-135 or Sm-149 in the target solution.

Target Solution Processing Effects

Target solution processing consist of medical isotope extraction and chemical adjustment to meet specifications.

During the medical isotope extraction process, various fission products and transuranics can be removed by the process steps. The removal rates of these elements that are assumed in the reactivity values presented in Subsection 4a2.6.2.4 are provided in Table 4a2.6-8 for elements with isotopes that have a significant effect on reactivity. Xenon and samarium are discussed separately above. Xenon and samarium account for greater than 90 percent of the negative reactivity worth of the fission products. The other fission products have lesser reactivity effect than xenon and samarium, and therefore, there are also no operational restrictions on the processing of these isotopes.

Plutonium-239 (Pu-239) builds-in during the target solution lifetime. The range of plutonium removal from the target solution during medical isotope processing may range from [ ]PROP/ECI. Greater removal of Pu-239 decreases reactivity worth per liter of solution. At the end of solution life, the total worth of plutonium in solution is between [ ]PROP/ECI. As the 1/M startup process accounts for the current solution reactivity worth, a change in reactivity worth of the solution as a result of a change in plutonium removal during

processing does not affect the safety of the startup process. The reactivity protection limits are designed to protect the PSB based on target solution over the range of burnup (i.e., from new solution to [ ]$^{PROP/ECI}$ irradiated solution), and therefore, over the range of plutonium concentrations. There are no operational requirements for reactivity control on the processing of the target solution as it relates to Pu-239.

The chemical adjustment of the target solution within the range of allowable specifications is accounted for in the analyses of reactivity values. The largest reactivity effect is the change in uranium concentration within allowable limits. The limiting core configuration has been determined and analyzed. The changes in pH and peroxide decomposition catalyst concentrations within acceptable range have negligible effect on reactivity. The operational requirements with regards to chemical adjustment of the solution are to maintain it within the allowable specifications of Table 4a2.2-2.

4a2.6.3.3 Credible Inadvertent Insertion of Reactivity

Operational and safety considerations for insertion of reactivity have been considered. As there are no control rods in the SHINE system, the inadvertent withdrawal of the most reactive control rod is not possible. SHINE has considered credible inadvertent insertion of reactivity scenarios and has found seven scenarios requiring detailed analysis.

The seven reactivity insertion events discussed in this subsection are:

- Target solution temperature reduction (e.g., excessive cooldown) during fill/startup
- Target solution temperature reduction (e.g., excessive cooldown) during irradiation operations
- Increase in the target solution density (e.g., due to pressurization) during irradiation operations
- Loss of neutron source during irradiation (e.g., due to accelerator interruptions)
- Additional target solution injection during fill/startup and irradiation operations
- Concentration of the uranium solution in the TSV through excessive evaporation
- Uranium solids introduction in the TSV through buildup or precipitation

Each event is summarized here, with additional discussion in Subsection 13a2.1.2 and Subsection 13a2.2.2. The results of credible reactivity insertion accidents show that they do not result in damage to the PSB.

For each type of event, the limiting reactivity insertion event sequence is selected. The limiting event is the event determined to have the greatest potential to damage the PSB. The highest peak powers are selected as the most limiting events. As peak power can generate higher temperatures, higher power densities, higher hydrogen levels, and greater pressure, the peak power is an appropriate means to select the limiting event. With a constant neutron source, peak power in a subcritical assembly is correlated closely to peak reactivity. When the system has neglible peak power (i.e., such as during filling), the event that generates the highest reactivity is selected as the limiting event.

Target Solution Temperature Reduction During Fill/Startup

A temperature range for irradiation has been set and is shown in Table 4a2.2-2. Low temperature limits in the TSV are protected by the TRPS and PCLS temperature instrumentation. If the

measured PCLS temperature is outside acceptable range, the target solution is transferred to the TSV dump tank.

Limiting scenarios have been evaluated for the target solution temperature reduction during fill/startup, and these scenarios set requirements for PCLS temperature trip setpoints. The most limiting reactivity insertion event from temperature reduction occurs after the TSV has been filled in Mode 1 to normal startup k_{eff} values. Then, the system is transitioned to Mode 2, and prior to neutron production with the accelerator, a failure in the PCLS is assumed to result in an instantaneous temperature decrease. It is assumed that the PCLS temperature changes from a steady state of 77°F (25°C) to a new steady state of 59°F (15°C). The instantaneous temperature change is conservative and not possible due to the thermal mass of the PCLS.

Using bounding temperature coefficients, including the uncertainties derived from the MCNP5 validation, the maximum reactivity insertion for this event is [ ]PROP/ECI. This was compared to the bounding low target solution worth, including the uncertainties derived from the MCNP validation, to calculate the maximum target solution volume with equivalent reactivity worth. This maximum volume is [ ]PROP/ECI of the expected critical volume, which is less than the minimum volume margin to critical used at fill. This demonstrated that the system has sufficient margin to prevent criticality in the bounding temperature reduction during fill scenario.

The increased reactivity in the system would result in a safety system actuation on high wide range neutron flux or high time-averaged neutron flux prior to reaching any safety limits for the system, as the neutron driver is ramped up to full output [ ]PROP/ECI. There is no damage to the PSB resulting from the event.

Target Solution Temperature Reduction During Irradiation Operations

Limiting scenarios have been evaluated for the target solution temperature reduction during irradiation operations.

A change in PCLS temperature during operation causes a relatively slow change in reactivity and in power because of the large thermal mass of the target solution. Because of this, the subcritical assembly will be protected by the IU Cell Safety Actuation initiated by the high time averaged flux trip at 104 percent power without risk of reaching unacceptable power levels in the time it takes the system to open the dump valves.

Increase in the Target Solution Density During Irradiation Operations

An increase in target solution density due to pressurization and void collapse during irradiation (Mode 2) causes a positive reactivity insertion. Relief valves on the TSV maintain the TSV headspace pressure within the range of -4.5 to 15 psig (-31.0 to 103 kPa) should the TOGS pressure regulation fail.

The limiting event that produces the highest TSV power has been analyzed. A TRIAD model was used to determine the timing of a nominal case. The limiting transient assumes that void fraction in the assembly instantaneously collapses to 0.0 percent void (i.e., complete collapse). This complete collapse of void bounds credible events with a smaller change in void fraction, such as a hydrogen deflagration or failure of TOGS pressure regulation. Results of the nominal void

collapse show that the transient occurs on a very short time scale, therefore a bounding analysis was made for the maximum power.

For the limiting event, a full void collapse was considered with the system operating at 125 kW. The maximum power reached was [ ]PROP/ECI, which results in a target solution power density below the limit for a transient event.

Loss of Neutron Source During Irradiation

Loss of neutron source during Mode 2 irradiation can occur due to intermittent decreases in the fusion neutron yield by the neutron driver. Fusion neutron yield can temporarily drop to any fraction from 100 percent and 0 percent due to focusing issues, electrical arcing, or other malfunctions within the accelerator.

As the neutron source effects generate substantial reactivity defect in the system, this loss of source creates positive reactivity insertion. During a loss of neutron source, void fractions decrease as bubbles leave the solution and temperatures begin to cool down, leading to reactivity increase.

The timing of this event was modeled for nominal conditions using TRIAD. Results showed that the transient happens on a short time scale, therefore a bounding analysis was made for the maximum power.

For this event, it is assumed that the accelerator decreases to 0 percent neutron yield. During this event, it is assumed all void leaves the target solution, leading to a reactivity increase of up to [ ]PROP/ECI. The temperature decreases, and within [ ]PROP/ECI, the TSV temperature has decreased by up to 11.2°F (6.2°C). This creates a reactivity increase of up to [ ]PROP/ECI. The final reactivity of the system is at least as negative as [ ]PROP/ECI below the startup k_{eff}.

It is assumed that the accelerator instantaneously returns to 122 percent output at peak reactivity. This results in a peak TSV power of [ ]PROP/ECI. The peak TSV power density is [ ]PROP/ECI. Following the peak power, the thermal and void feedback effects rapidly result in a decrease in power and the assembly output stabilizes with normal operating parameters. The safety limits of the assembly are not challenged, and therefore, there is no damage to the PSB.

Additional Target Solution Injection During Fill/Startup and Irradiation Operations

Target solution injection directly adds fissile material to the TSV, and results in reactivity increase. Multiple administrative controls, passive safety features, and active safety features are in place to limit the reactivity effects from additional target solution injection at TSV fill (Mode 1). Target solution injection during irradiation (Mode 2) is not considered credible due to redundant isolation valves interlocked with Mode 1 and the location of the TSV hold tank physically below the TSV.

In Mode 1, the limiting transient event (i.e., the one calculated to yield the highest reactivity values) is an inadvertent fill of solution after the target solution has already been filled to normal startup k_{eff} values. This could occur due to operator error or equipment malfunction.

Transient analysis has been performed using a point reactor kinetics model calculation. Controls related to this scenario are described in Subsection 4a2.6.2.7. Administrative controls are assumed to have failed. The results of the reactivity for the inadvertent fill event are shown in Figure 4a2.6-19. The delayed neutron population in the assembly delays the increase in neutron flux following the reactivity addition. The scenario occurs when the starting fill level results in the opening of the dump valves corresponding with the end of a fill step. The high source range neutron flux trip is reached prior to this point, but during the short delay between the trip point and the valves opening, the reactivity and power continue to rise. The minimum volume margin to critical at the time the valves are fully opened is approximately [ ]PROP/ECI.

There is no significant increase in thermal power during the event, and correspondingly no significant increase in hydrogen production, temperature of the target solution, power density, or pressure in the PSB. Therefore, the event does not challenge the safety limits or the integrity of the PSB and there are no radiological consequences. Subsection 13a2.1.2 describes the target solution insertion event in further detail.

Concentration of the Uranium Solution in the TSV through Excessive Evaporation

The reactivity of the target solution is dependent on the uranium concentration. Excessive evaporation or water loss from the target solution can lead to an increase in uranium concentration in the TSV, leading to a reactivity insertion. This reactivity insertion could occur in Mode 1 or Mode 2 conditions. Anticipated water holdup is accounted for in startup margin, and therefore does not pose a safety concern. TOGS operates as a closed loop and normally returns condensate from evaporation and hydrogen recombination to the TSV. Water loss could be caused by a failure of the TOGS to return condensate. The maximum rate of reactivity insertion from postulated events in Mode 1 or in Mode 2 prior to operation of the neutron driver was found to be [ ]PROP/ECI. In Mode 2 at full power irradiation and limiting target solution temperature, the maximum rate of reactivity insertion from postulated events was found to be approximately [ ]PROP/ECI. In Mode 1, the limiting reactivity insertion will lead to a TRPS actuation on high source range neutron flux, terminating the event. In Mode 2, the limiting reactivity insertion event will lead to increased power production, and if not terminated by the operators, the event is terminated by the TRPS actuation on high time averaged neutron flux. The event in either mode does not result in damage to the PSB.

Uranium Solids Introduction in the TSV through Buildup or Precipitation

Uranium solids could be introduced into the TSV through two identified means: uranyl salt crystal buildup in the TSV and precipitation of uranium solids. Uranium solids could result in unexpected reactivity increases through the relocation of fissile material in the primary system.

The first of the two postulated scenarios is a buildup of uranyl salt crystals occurs over time (such as in a “bathtub ring” in the TSV). The deposited salt crystals could become rewetted and re-enter the target solution. This could lead to an unexpected increase in reactivity as total uranium solution concentration would increase. The buildup of salt crystals in the TSV is not expected due to the high humidity of the TSV and the cold walls of the TSV. In addition, periodic internal inspection of the TSV is performed, which would detect salt crystal buildup in the TSV. To quantify reactivity effects, it is postulated that a piece of deposited salt containing 100 grams of uranium is dislodged from the upper TSV surfaces and falls into the target solution. The re-dissolution of the salt adds approximately [ ]PROP/ECI of reactivity to the system.

The second postulated scenario is precipitation of uranium solids from the solution. Precipitation of uranium solids due to uranyl peroxide formation is possible in aqueous reactors. In the SHINE system, chemistry, power density, and temperature limits have been placed on the target solution as described in Subsection 4a2.6.3.5. Given these limits, no significant precipitation is expected.

Summary of Credible Inadvertent Insertions of Reactivity

The controls that prevent or provide mitigation for the consequences of an excess reactivity insertion event are listed in Subsection 13a2.2.2 for the seven initiating events discussed. Given these controls, none of the analyzed events result in damage to the PSB.

4a2.6.3.4 Negative Reactivity

While typical reactors must have sufficient negative reactivity available in control rods to ensure the reactor can be shut down safely, the subcritical assembly operates safely without control rods. Reactors are required to characterize the amount of negative reactivity available to be added to the core. In the SHINE system, the target solution is moved for shutdown rather than adding poisons or control rod worth. Therefore, the concept of negative reactivity is different in the SHINE system.

In the SHINE system, the subcritical assembly is shut down by moving the target solution to a subcritical location (i.e., the TSV dump tank). The SHINE subcritical assembly is capable of being shutdown to $k_{eff} < 0.94$ for any analyzed condition by transferring the target solution to the TSV dump tank.

The important parameters for ensuring safe shutdown are: (1) the redundancy and reliability of transferring the solution to the TSV dump tank (described in Subsection 4a2.6.3.7), (2) the rate of target solution transfer to the TSV dump tank (described below), and (3) the reactivity analysis once the solution is in the TSV dump tank (described below).

Rate of Target Solution Transfer to the TSV Dump Tank

When analyzing transient or accident scenarios involving the shutdown of the TSV, the following parameters, or more conservative values, are used for the drain time, delay time, and opening time of the dump valves. The TSV drain system must drain the TSV within 183 seconds with a liquid volume in the TSV of [ ]$^{PROP/ECI}$, which is the limiting core configuration. The design drain time is conservatively based on only one drain line being available.

The delay time between neutron flux levels exceeding predetermined limits and the start of the dump valves opening is a maximum of one second. The duration of time it takes for the dump valves to fully open is less than 2.0 seconds.

The specified drain time, delay time, and opening time ensure safe shutdown of the subcritical assembly in anticipated transients and postulated accident conditions.

Reactivity Analysis in the TSV Dump Tank

The TSV dump tank reactivity has been analyzed using MCNP5. The V&V for MCNP5 is discussed in Subsection 4a2.6.2.1. The k_{eff} calculation methodology and how uncertainties in the

methodology are accounted for are discussed in Subsection 4a2.6.2.6.1. The methodology ensures that k_{eff} in the dump tank remains less than 0.94.

The TSV dump tank is analyzed to remain safely shutdown for the most reactive credible uranium concentration.

The most reactive uranium concentration results in an increase of approximately [ ]$^{PROP/ECI}$ relative to the nominal concentration. This methodology ensures that the TSV dump tank will be subcritical at any uranium concentration, which provides very high confidence in shutdown margin for the range of normal conditions and accident scenarios. This significantly increases margins when the system contains expected uranium concentrations, as specified in Table 4a2.2-2.

The TSV dump tank reactivity increases as the target solution temperature cools down from its operating temperature of approximately 118°F (48°C) to the light water pool temperature of approximately 68°F (20°C). Dump tank reactivity is calculated assuming the target solution has cooled down and achieved equilibrium with the pool.

Abnormal conditions were also evaluated within the TSV dump tank, including a design basis seismic event, excessive corrosion, overfilling, salt accumulation, and water intrusion. The increases in k_{eff} due to the single abnormal conditions analyzed do not result in k_{eff} values exceeding 0.94. Therefore, the dump tank is able to maintain the solution in a subcritical state when undergoing these analyzed single abnormal conditions.

Normal electrical power is not required to shut down the subcritical assembly or maintain it in a safe shutdown condition. After a loss of normal electrical power, the target solution is allowed to remain in the TSV for up to 3 minutes, with the dump valves receiving power from the uninterruptible electrical power supply system (UPSS). After this period of time, the TSV dump valves are automatically opened by TRPS disconnecting power to the valves, resulting in a dump of the solution to the TSV dump tank. The TSV dump tank does not require active cooling given the low decay heat loading of the target solution. Rejection of decay heat is achieved through passive convection with the light water pool.

Safety-related electrical power from the UPSS is required by the TOGS for 5 minutes following a loss of off-site power in order to maintain hydrogen concentrations at acceptable levels in the PSB. See Section 4a2.8.

Transient poisons, such as xenon, are not credited in the reactivity analysis.

Verification of the k_{eff} and shutdown margin in the TSV dump tank is not required. This approach to safety is acceptable given the subcritical margin of 0.06 Δk, the consideration of relevant uncertainties in the calculation process, and the consideration of abnormal conditions to which the vessel may be exposed while still maintaining the subcritical margin.

The subcritical assembly is capable of being safely shutdown for any postulated reactivity loading in the TSV. In the TSV dump tank, the target solution is maintained below a k_{eff} of 0.94 after cooldown for the most reactive credible uranium concentrations for normal and abnormal conditions. Combined with the analyses described in Subsection 4a2.6.3.7, the target solution can be shut down safely and maintained in a safe shutdown condition.

4a2.6.3.5 Limiting Core Configuration

The limiting core configuration is that core that produces the highest power density possible for the target solution. This power density is then compared to power density limits determined from historical stability data and solution chemistry effects to ensure acceptability.

Power Density Limits

The power density is important for ensuring thermal hydraulic stability. If the average power density is too high, the bubbles generated through radiolysis can cause surface effects such as sloshing from turbulent liquid contacting the vessel walls. Section 3.2 of IAEA-TECDOC-1601 (IAEA, 2008) summarizes historical data on power density instabilities. Based on experiments conducted at historic aqueous homogeneous reactor (AHR) facilities (Russian ARGUS facility and French SILENE facility), steady state, stable core conditions could be sustained at power densities below approximately 1.8 thermal kilowatts/liter (kW/L) (BNL, 2010; IAEA, 2008; Barbry Francis, 2007). The SHINE system is designed to ensure that power density is maintained less than [ ]PROP/ECI. However, the chemical stability data below provides additional restriction on the limiting power densities.

Power density is a key parameter for chemical stability. Uranyl peroxide is known to precipitate out of uranyl sulfate solution under certain conditions of irradiation, due to the presence of hydrogen peroxide formed from radiolysis effects. The formation of uranium precipitates is dependent on the rates of hydrogen peroxide production, the peroxide solubility, and the rate of decomposition. The key factors influencing these parameters include the solution chemistry (including pH and catalysts), temperature, and power density. SHINE has evaluated the available literature and found that in operating within the power density limits presented in Table 4a2.6-9 and the other operating limits of Table 4a2.2-2, formation of significant uranyl peroxide precipitates is not expected. Supporting literature is from existing operating reactor data and experimental investigations. The average steady-state power density limit to prevent precipitation is determined to be [ ]PROP/ECI at cold conditions of 68°F (20°C). The transient power density limit is determined to be [ ]PROP/ECI at cold conditions of 68°F (20°C), the duration of which is limited by the high time-average neutron flux trip within the TRPS.

The operational limits related to preventing uranyl peroxide precipitation include a correlation for the steady-state power density as a function of temperature, a correlation for the minimum concentration of [ ]PROP/ECI catalyst required as a function of pH, and a transient power density limit.

Peroxide decomposition rates are highly dependent on temperature and catalyst concentrations, while peroxide solubility is highly dependent on the pH of the solution. Uranium concentration also has a lesser effect on peroxide solubility but a compensating effect in the rate of hydrogen production, as a result the power density limits are independent of uranium concentration over the operating range.

For higher pH in the target solution, the peroxide solubility decreases, requiring an increase in the catalyst concentration to achieve a corresponding increase in the peroxide decomposition rate. A correlation for the [ ]PROP/ECI catalyst concentration required as a function of pH is provided in Table 4a2.6-9. A minimum concentration of [ ]PROP/ECI is imposed in addition to the correlation.

With the appropriate catalyst to compensate for pH, the power density limit is solely a function of the average temperature in the target solution. The correlation for the limiting average steady-state power density is provided in Table 4a2.6-9. A maximum value of [ ]PROP/ECI is also imposed due to the thermal hydraulic stability concerns discussed previously.

Although an extensive history of transient testing with AHRs has shown that precipitation will not occur with transient power densities in excess of 100 kW/L, the transient power density limit for the SHINE system is set to the maximum steady-state power density limit of [ ]PROP/ECI. The averaging time of the high time-average neutron flux trip was determined by evaluating the temperature effects of transients at this power density and ensuring the limiting event would not challenge the safety limits for the system.

Precipitation of the uranium from the solution is undesired due to potential for significant reactivity insertion and the possibility of difficulties in dumping the solution. Remaining below the power density limits and within the chemistry and temperature limits in Table 4a2.6-9 and Table 4a2.2-2 results in hydrogen peroxide concentrations below those that may result in precipitation.

Limiting Core Configuration Results

The limiting core configuration for a given power level is the core configuration that has the highest allowable power density. It was determined that the limiting core configuration is set by the thermal hydraulics analysis as the minimum volume to ensure that target solution boiling does not occur.

The limiting core configuration occurs at a minimum volume of [ ]PROP/ECI. This fill volume has a calculated uranium concentration of [ ]PROP/ECI and a cold fill height of approximately [ ]PROP/ECI in the TSV. At a TSV power level of 125 kW, this results in an average power density of less than [ ]PROP/ECI. The local peak power density is less than [ ]PROP/ECI. The limiting core configuration is summarized in Table 4a2.6-10.

The aspect ratio of the TSV and the startup method of using the 1/M curve to fill to approximately 5 percent by volume below critical, results in core configurations with smaller fill volumes having lower reactivity. This is due to the fact that although the volume margin is proportional and smaller with smaller core configurations, the final fill height is in a location of higher target solution worth, resulting in an overall larger reactivity margin to critical. With the lower reactivity in this system, it is estimated that a neutron source strength of [ ]PROP/ECI would be needed to reach the operating limit of 125 kW.

The peak flux density in the limiting core configuration is less than [ ]PROP/ECI.

The average power density has greater than [ ]PROP/ECI margin from the [ ]PROP/ECI, and greater than [ ]PROP/ECI margin to the average steady-state power density limit of [ ]PROP/ECI that was determined based on an anticipated solution temperature of 128°F (53°C).

Note that the power density of the nominal core configuration results in an average power density of [ ]PROP/ECI, which is [ ]PROP/ECI below the limiting core configuration average power density.

The thermal-hydraulic discussion in Section 4a2.7 contains the detailed analysis of this limiting core configuration and shows that cooling water availability and heat transfer is sufficient to maintain the target solution temperature within acceptable limits.

4a2.6.3.6 Stability Criteria

Operating at a subcritical condition with a low power density and negative temperature and void reactivity coefficients provides TSV stability and self-limiting power oscillations.

Power transients occur in the TSV as a result of normal anticipated reactivity variations within the target solution and normal expected driver output variations. These transients result in damped power oscillations. Transient analyses have been performed to demonstrate that normal power oscillations during operation are acceptable. See Subsection 4a2.6.1.4 and Subsection 4a2.6.2.8 for results from transient analyses, which show self-limiting oscillations and the magnitude of potential oscillations.

Also, see Subsection 13a2.1.8 for discussion of reactivity and power oscillations in accident conditions.

Section 13a8.1 describes controls to maintain power oscillations within acceptable limits through the TRPS high time-average neutron flux trip. If a power oscillation results in an increase in neutron flux higher than allowable without operator intervention, protection is provided by the TRPS setpoint on high time-average neutron flux. A trip by TRPS automatically de-energizes the neutron driver and opens the TSV dump valves. The target solution is transferred (by force of gravity) into the favorable geometry TSV dump tank.

Transient power oscillations less than [ ]$^{PROP/ECI}$ of full TSV power (i.e., 125 kW) are considered acceptable during normal operation. The high wide range neutron flux will initiate a trip if this discrete value is exceeded. The average power of these events are limited by the high time-average neutron flux trip, set to 104 percent of full TSV power, to ensure that they do not challenge the safety limits. The safety analyses assume the TRPS high time-average neutron flux trip initiates at 110 percent of full TSV power, providing margin to the acceptable power oscillation average power.

In addition, the PCLS low and high temperature trips prevent excessive cooling system oscillations, which provides additional defense-in-depth controls to prevent excessive oscillations from cooling system temperature variations.

The trip setpoint of the TRPS high wide range neutron flux and high time-average neutron flux are sufficient to protect the technical specification safety limits.

4a2.6.3.7 Redundancy and Diversity of Shutdown Methods

As indicated in Subsection 4a2.6.3.4 above, shutdown margin is achieved under credible conditions by transferring the target solution to the TSV dump tank by redundant dump valves.

The dump system consists of two completely independent flow paths between the TSV and the TSV dump tank. The physical design connects the flow paths to different parts of the TSV and dump tank. Each path consists of a dump line from the TSV to the TSV dump tank, and a dump valve to control the drainage of the target solution into the TSV dump tank. Two completely

independent overflow lines are also present, which serve as vent lines from the TSV dump tank to the TSV to equalize gas pressures during solution dumps.

The dump valves are highly reliable fail-open units designed for service in the environmental conditions present. Both valves are actuated by isolating power to them, which is a method resistant to common mode failures. Both TRPS and PICS can independently open the TSV dump valves. The PICS and TRPS are configured in series configuration for the TSV dump valve control. When the TRPS output is energized, the PICS has control of the TSV dump valves independent from the TRPS. If either system de-energizes the output, the dump valves open.

Each dump valve is equipped with a valve position indicator, which immediately alerts the operator of a failure of the valve to respond. Any failure of a valve to respond to a commanded signal will be thoroughly investigated and corrected, as part of the corrective action program, to ensure the valves can be relied upon when required.

Valves are maintained appropriately to ensure high reliability. Design considerations allow for underwater maintenance of the valves, when needed. The valves are designed for a lifetime of 30 years.

There is internal redundancy within the TRPS such that a single failure does not result in a spurious actuation. Either TRPS or PICS can open the dump valves.

As the dump valves are actuated with each irradiation cycle, they undergo regular normal cycling. This frequent actuation provides data that could indicate degraded performance prior to failure to perform their safety function. A decrease in drain rate indicates potential for dump line blockage, overflow line blockage, or valve failure to fully open. An increase in valve opening time indicates potential future valve failure. SHINE will monitor drain rates and opening time at least yearly to ensure early indication of failures are identified.

Given the high valve reliability, automatic valve opening on control system or electrical power failure, and ability to frequently actuate and trend performance of the dump valves, no additional shutdown mechanisms are required for ensuring target solution can be shut down safely.

The target solution is maintained in a favorable geometry shutdown condition (k_{eff} less than 0.94) in locations outside the TSV by passive engineered controls. TRPS IU Cell Safety Actuations also lead to de-energizing the HVPS of the NDAS, which eliminates fusion neutron production and terminates the fission process within the subcritical assembly.

The TSV dump valves and TPS provide a high degree of confidence in the ability to drain the target solution to a safe shutdown configuration.

4a2.6.3.8 Technical Specifications

Certain material in this subsection provides information that is used in the technical specifications. This includes limiting conditions for operation, setpoints, design features, and means for accomplishing surveillances. In addition, significant material is also applicable to, and may be used for the bases that are described in the technical specifications.

Table 4a2.6-1 – Typical Neutron Flux Ranges

Operational flux ranges in the TSV	Approximately [ ]PROP/ECI
Expected detector flux ranges during irradiation	Approximately [ ]PROP/ECI
Expected detector flux ranges during startup	Approximately 1.0E+00 to 1.0E+04 n/cm^2-s

Table 4a2.6-2 – Plutonium from Target Solution Transmutation

	Total Pu Mass Produced Throughout Solution Life, Per Batch (g)	Total Pu Mass Expected in Solution at End of Solution Life, Per Batch (g)
Pu-238	[ ]PROP/ECI	[ ]PROP/ECI
Pu-239	[ ]PROP/ECI	[ ]PROP/ECI
Pu-240	[ ]PROP/ECI	[ ]PROP/ECI
Pu-241	[ ]PROP/ECI	[ ]PROP/ECI

Table 4a2.6-3 – Reactivity Changes Due to PCLS Voids

	Delta Reactivity (pcm)	
Percent Void	**Reactivity Change for Mode 1 Startup Conditions**	**Reactivity Change for Mode 2 Irradiation Conditions**
1	[ ]PROP/ECI	[ ]PROP/ECI
2	[ ]PROP/ECI	[ ]PROP/ECI
3	[ ]PROP/ECI	[ ]PROP/ECI
5	[ ]PROP/ECI	[ ]PROP/ECI
10	[ ]PROP/ECI	[ ]PROP/ECI
20	[ ]PROP/ECI	[ ]PROP/ECI
50	[ ]PROP/ECI	[ ]PROP/ECI
100	[ ]PROP/ECI	[ ]PROP/ECI

Table 4a2.6-4 – Reactivity Changes Due to Loss of Light Water Pool

	Delta Reactivity (pcm)	
Pool Level Relative to Bottom of TSV (cm)	**Reactivity Change for Mode 1 Startup Conditions**	**Reactivity Change for Mode 2 Irradiation Conditions**
[ ]PROP/ECI	[ ]PROP/ECI	[ ]PROP/ECI
[ ]PROP/ECI	[ ]PROP/ECI	[ ]PROP/ECI
[ ]PROP/ECI	[ ]PROP/ECI	[ ]PROP/ECI
[ ]PROP/ECI	[ ]PROP/ECI	[ ]PROP/ECI
[ ]PROP/ECI	[ ]PROP/ECI	[ ]PROP/ECI

Table 4a2.6-5 – TSV Fill Limits

TSV Fill Limit	Fill Volume[(a)]	Approximate Fill Height at Zero Power Conditions[(b)]
Minimum Fill	[ ]PROP/ECI	[ ]PROP/ECI
Maximum Fill	[ ]PROP/ECI	[ ]PROP/ECI

(a) Excluding dump line volume
(b) From internal bottom of TSV

Table 4a2.6-6 – Calculated Core Effective Multiplication Factors

	k_{eff} in Mode 1 (After Filling)	k_{eff} in Mode 2 (Steady-State[(a)])	k_{eff} in Mode 3 (After Solution has Dumped)
Nominal core configuration	[ ]$^{PROP/ECI}$	[ ]$^{PROP/ECI}$	< 0.94
Limiting core configuration	[ ]$^{PROP/ECI}$	[ ]$^{PROP/ECI}$	< 0.94

(a) At 125 kW fission power, using best estimate temperatures and void fractions

Table 4a2.6-7 – Maximum Additional Volume Margin to Critical to Compensate for Water Holdup

Holdup Mass (kg)	Percent of Estimated Critical Volume
1	[ ]PROP/ECI
2	[ ]PROP/ECI
3	[ ]PROP/ECI

Table 4a2.6-8 – Nominal Removal Rates for Elements Affecting Reactivity[(a)]

Element	Percent Removed per Processing Cycle
Pu	[ ]PROP/ECI
Sm	[ ]PROP/ECI
Xe	[ ]PROP/ECI

(a) Values for elements that have potential for a statistically significant effect on reactivity

Table 4a2.6-9 – Power Density Limits for Target Solution

	Correlation	Additional Bounds
Steady-state average power density limit (kW/L)	[ ]PROP/ECI	[ ]PROP/ECI
Minimum [ ]PROP/ECI concentration required (ppm)	[ ]PROP/ECI	[ ]PROP/ECI
Transient average power density limit (kW/L)	[ ]PROP/ECI	N/A

Table 4a2.6-10 – Limiting Core Configuration Calculated Parameters

Parameter	Value
TSV Cold Volume[a]	[ ]PROP/ECI
Uranium Concentration	[ ]PROP/ECI
Approximate TSV Fill Height at Zero Power Conditions	[ ]PROP/ECI from interior bottom of TSV
Nominal Power Level	[ ]PROP/ECI
Average Void Fraction[b]	[ ]PROP/ECI
Average Solution Temperature[b]	128°F
Average Power Density[b]	[ ]PROP/ECI
Peak Power Density[b]	[ ]PROP/ECI

(a) Volume is the parameter that defines the limiting core configuration
(b) At 125 kW fission power, using best estimate temperatures and void fractions

Figure 4a2.6-1 – 1/M Curves

Proprietary Information – Withheld from public disclosure under 10 CFR 2.390(a)(4)
Export Controlled Information – Withheld from public disclosure under 10 CFR 2.390(a)(3)

Figure 4a2.6-2 – Xe-135 and Sm-149 Worth for Cycles 1-4

Figure 4a2.6-3 – Xe-135 and Sm-149 Worth for End of Life Cycles

Proprietary Information – Withheld from public disclosure under 10 CFR 2.390(a)(4)
Export Controlled Information – Withheld from public disclosure under 10 CFR 2.390(a)(3)

Figure 4a2.6-4 – Power and Temperature Transients Due to Changes in TOGS Pressure Partially Collapsing Void in Target Solution

Proprietary Information – Withheld from public disclosure under 10 CFR 2.390(a)(4)
Export Controlled Information – Withheld from public disclosure under 10 CFR 2.390(a)(3)

Figure 4a2.6-5 – Void Collapse Transient at 100 Seconds, Lasting for 10 Seconds

Figure 4a2.6-6 – Accelerator Transient from 100 Percent Output to 0 Percent Output for 60 Seconds, Followed by Return to 100 Percent Output

Proprietary Information – Withheld from public disclosure under 10 CFR 2.390(a)(4)
Export Controlled Information – Withheld from public disclosure under 10 CFR 2.390(a)(3)

Figure 4a2.6-7 – Accelerator Transient from 100 Percent Output to 80 Percent Output for 80 Seconds, Followed by Return to 100 Percent Output

Figure 4a2.6-8 – Accelerator Transient, Output Oscillations of 10 Percent with a 5 Second Period

Figure 4a2.6-9 – Accelerator Transient, Output Oscillations of 10 Percent with a 1 Hour Period

Proprietary Information – Withheld from public disclosure under 10 CFR 2.390(a)(4)
Export Controlled Information – Withheld from public disclosure under 10 CFR 2.390(a)(3)

Figure 4a2.6-10 – Primary Cooling Transient from 20°C to 25°C to 15°C

Proprietary Information – Withheld from public disclosure under 10 CFR 2.390(a)(4)
Export Controlled Information – Withheld from public disclosure under 10 CFR 2.390(a)(3)

Figure 4a2.6-11 – Axial Flux Densities
(Sheet 1 of 3)

Proprietary Information – Withheld from public disclosure under 10 CFR 2.390(a)(4)
Export Controlled Information – Withheld from public disclosure under 10 CFR 2.390(a)(3)

Figure 4a2.6-11 – Axial Flux Densities
(Sheet 2 of 3)

Proprietary Information – Withheld from public disclosure under 10 CFR 2.390(a)(4)
Export Controlled Information – Withheld from public disclosure under 10 CFR 2.390(a)(3)

Figure 4a2.6-11 – Axial Flux Densities
(Sheet 3 of 3)

Proprietary Information – Withheld from public disclosure under 10 CFR 2.390(a)(4)
Export Controlled Information – Withheld from public disclosure under 10 CFR 2.390(a)(3)

Figure 4a2.6-12 – Radial Flux Densities
(Sheet 1 of 2)

Proprietary Information – Withheld from public disclosure under 10 CFR 2.390(a)(4)
Export Controlled Information – Withheld from public disclosure under 10 CFR 2.390(a)(3)

Figure 4a2.6-12 – Radial Flux Densities
(Sheet 2 of 2)

Proprietary Information – Withheld from public disclosure under 10 CFR 2.390(a)(4)
Export Controlled Information – Withheld from public disclosure under 10 CFR 2.390(a)(3)

Figure 4a2.6-13 – Distribution of Fast, Epithermal, and Thermal Neutron Fluxes (Sheet 1 of 3)

Proprietary Information – Withheld from public disclosure under 10 CFR 2.390(a)(4)
Export Controlled Information – Withheld from public disclosure under 10 CFR 2.390(a)(3)

Figure 4a2.6-13 – Distribution of Fast, Epithermal, and Thermal Neutron Fluxes (Sheet 2 of 3)

Proprietary Information – Withheld from public disclosure under 10 CFR 2.390(a)(4)
Export Controlled Information – Withheld from public disclosure under 10 CFR 2.390(a)(3)

Figure 4a2.6-13 – Distribution of Fast, Epithermal, and Thermal Neutron Fluxes (Sheet 3 of 3)

Figure 4a2.6-14 – Power Coefficients for Nominal and Limiting Core Configurations

Figure 4a2.6-15 – Void Collapse Transient for Eight Different Bubble Zone Transit Times

Figure 4a2.6-16 – Nominal Standard Startup Transient for Eight Different Bubble Zone Transit Times

Figure 4a2.6-17 – Accelerator Dropout Transient for Eight Different Bubble Zone Transit Times

Proprietary Information – Withheld from public disclosure under 10 CFR 2.390(a)(4)
Export Controlled Information – Withheld from public disclosure under 10 CFR 2.390(a)(3)

Figure 4a2.6-18 – Temperature Coefficient of Reactivity

Proprietary Information – Withheld from public disclosure under 10 CFR 2.390(a)(4)
Export Controlled Information – Withheld from public disclosure under 10 CFR 2.390(a)(3)

Figure 4a2.6-19 – Inadvertent Fill Progression

4a2.7 THERMAL HYDRAULIC DESIGN

This section presents the information and analyses necessary to show that sufficient cooling capacity exists to prevent target solution overheating and loss of primary system boundary (PSB) integrity for anticipated system operating conditions.

The target solution vessel (TSV) is an annular pressure vessel that contains the target solution during the irradiation process. During irradiation, heat is generated in the target solution. The heat generation is volumetric and nonuniform. The highest generation rates are calculated to be towards the center of the target solution. The mechanism of heat transfer during irradiation from the target solution to the interior walls of the target solution vessel is a combination of temperature-driven natural convection of the bulk solution and bubble-driven convection by the flow of gas bubbles in the target solution. Radiolysis of the water in the target solution causes volumetric generation of hydrogen and oxygen bubbles. These bubbles flow upwards through the target solution to the surface of the solution, circulating the solution and enhancing the heat transfer.

The TSV is designed for cooling by internal natural and bubble-assisted convection of the target solution and by forced external convection of the primary cooling water supplied by the primary closed loop cooling system (PCLS). During Mode 2 operation, with the exception noted below, the PCLS flow rate must be above the minimum flow rate to ensure sufficient forced convection.

In Mode 2, the thermal-hydraulic design allows for short periods without forced cooling water flow from PCLS when there is no accelerator output. This allows for time to recover from potential cooling system transients without dumping target solution. During this time, the system is operating with natural convection cooling water flow.

No PCLS forced flow is required in Mode 1 for maintaining operating limits of the target solution, but forced flow is used to maintain stability of the nuclear system during the 1/M process.

No PCLS forced flow is required in Mode 3, as the solution is moved to the TSV dump tank and cooling is through natural convection to the light water pool.

Heat transfer and temperature profiles for the neutron multiplier are provided in Subsection 4a2.2.6.

Calculations presented in this section are performed with analytical methods and correlations.

4a2.7.1 HEAT REMOVAL SYSTEMS

The SHINE thermal-hydraulic design includes systems that provide heat removal from the subcritical assembly during normal irradiation and shutdown operations. These systems include the PCLS and the light water pool for each irradiation unit (IU). Detailed descriptions of the PCLS and the light water pool are provided in Section 5a2.2 and Section 4a2.4, respectively.

The TSV rejects heat through [ ]$^{PROP/ECI}$: the inner shell, the outer shell, [ ]$^{PROP/ECI}$.

Heat is also rejected to the gas management system, known as the TSV off-gas system (TOGS). Heat transfer is through evaporation, convective cooling on the liquid surface, and release of

radiolysis products. In the thermal-hydraulic analysis of the TSV and TSV dump tank, no credit is taken for TOGS heat removal. This is conservative as the heat transfer to TOGS will reduce the average and peak temperatures of the target solution.

Each of the systems and approaches for heat removal credited in the analysis is described in the subsections below.

For the analyses described below, the limiting core condition is assumed, as described in Subsection 1.1.3.

4a2.7.1.1 PCLS Cooling Loop

The PCLS cooling loop removes up to 469,000 British thermal units per hour (Btu/hr) (137.5 kilowatts [kW]) of heat, via forced convection, from a single TSV during full-power IU operation. The PCLS also removes up to 67,000 Btu/hr. (20 kW) of heat, via forced convection, from a single neutron multiplier during full-power IU operation. Each PCLS is separate and independent for an IU. There are eight instances of PCLS in the facility.

The PCLS circulates deionized water in the upward direction [ ]PROP/ECI along the outside of the TSV walls during normal operation. The heat absorbed by the PCLS water is transferred to the radioisotope process facility cooling system (RPCS) through a heat exchanger. See Figure 5a2.2-1 for the process flow diagram of the PCLS cooling loop.

The PCLS is calculated to remove approximately 98 percent of the TSV fission power, when assuming no heat removal by the TOGS.

Heat transfer from the neutron multiplier to the PCLS and multiplier temperatures are discussed in Subsection 4a2.2.6.

4a2.7.1.2 Light Water Pool

The light water pool contains no forced cooling components. In Mode 3, the light water pool performs direct cooling of the TSV dump tank via natural convection within the dump tank and natural convection of the pool water. Up to [ ]PROP/ECI of heat is deposited in the light water pool from the TSV dump tank. The light water pool is expected to remove 100 percent of the thermal power from the TSV dump tank.

The light water pool does not provide direct cooling of the TSV or neutron multiplier. Due to the radiation shielding provided by the light water pool, power is deposited into the pool by long-range radiation from the TSV, neutron multiplier, and neutron driver. Up to 7900 Btu/hr (2.3 kW) of heat is deposited in the pool during full-power IU operation.

The heat absorbed by the pool water is rejected principally through heat transfer to the PCLS via contact with the piping and vessels cooled by PCLS cooling water. This heat transfer is through natural convection on the pool side and forced convection on the PCLS side of the component.

Heat transfer also occurs through evaporation to the IU cell atmosphere and conduction through the surrounding concrete. These two mechanisms are ignored in the analysis, which is conservative as these mechanisms will lower actual pool temperatures.

The expected heat removal fraction of the light water pool is 2 percent of the thermal power of the TSV.

Heatup of the light water pool is described in Subsection 4a2.4.2.2.

4a2.7.1.3 TSV Heat Removal Surfaces

The TSV is an annular vessel with [ ]PROP/ECI. The TSV contains [ ]PROP/ECI: the TSV inner shell, the TSV outer shell, [ ]PROP/ECI.

The TSV inner shell inner diameter is [ ]PROP/ECI, with a nominal thickness of [ ]PROP/ECI. The TSV outer shell outer diameter is [ ]PROP/ECI, with a nominal thickness of [ ]PROP/ECI.

[

]PROP/ECI

Through these [ ]PROP/ECI surfaces, approximately [ ]PROP/ECI of the heat is expected to be transferred through the inner shell and approximately [ ]PROP/ECI of the heat is expected to be transferred through the outer shell. [ ]PROP/ECI

4a2.7.1.4 Gas Management System

Gas management is provided by the TOGS. TOGS provides a closed loop sweep gas over the head space of the TSV. There are two air-to-water heat exchangers in each TOGS loop for the purpose of removing solution entrained in the sweep gas, condensing water vapor, and removing heat generated by the recombination process. These heat exchangers are cooled by the RPCS.

A description of TOGS is provided in Section 4a2.8.

Evaporative cooling and convective cooling of the liquid surface of the target solution occurs within the TSV. Heat entering TOGS is removed and transferred to RPCS principally by the TSV off-gas condenser. The heat removal from the TSV by TOGS due to evaporative and convective cooling is not considered for target solution cooling calculations.

Radiolysis also occurs in the target solution. SHINE calibrates TSV fission power to the total energy produced from fission, including radiolysis product generation. Radiolysis absorbs energy from fission, resulting in the production of hydrogen and oxygen gases. This heat is then deposited in the TOGS gas stream through the recombination process, and then it is removed and transferred to RPCS principally by the TOGS recombiner condenser. The expected heat removal from the TSV by TOGS due to radiolysis products is not considered for target solution cooling calculations.

For TSV heat transfer calculations, the assumed heat removal rate of the TOGS is 0 percent of the TSV fission power. This is a conservative assumption as it results in higher bulk and peak target solution temperatures.

4a2.7.2 ACCOMODATION OF VARYING POWER

The PCLS is capable of removing the heat generated by the TSV and neutron multiplier from zero power operation to full-power operation at the licensed power limit of 125 kW. For the most limiting power transient, the target solution temperature is prevented from rising above allowable limits by the thermal mass of the target solution, as described in Subsection 4a2.7.6.

The power transient analyzed bounds the potential effects of gas generation, changes in void fraction, and gas transport. The analysis shows that the bulk target solution temperature in the most limiting transient remains below 176°F (80°C). This bulk temperature is acceptable as it is within the operating limits of the target solution.

After the transfer of target solution to the TSV dump tank is initiated, the light water pool is capable of removing, by natural convection, the heat generated after the TSV has been operating at up to full power. Sufficient margin is included to accommodate the heatup resulting from the most limiting power transient having occurred prior to the transfer of the target solution from the TSV to the TSV dump tank.

Given the transient analysis performed, the combined systems and approaches for heat removal in the TSV are able to accommodate varying power generation from gas generation, changes in void fraction, and gas transport during normal operation and anticipated transients.

4a2.7.3 COOLING WATER HYDRAULIC CHARACTERISTICS OF THE TSV

4a2.7.3.1 General Characteristics

[ ]PROP/ECI The arrangement, number, and types of heat transfer surfaces are described in Subsection 4a2.7.1. Heat transfer surface arrangements are also shown in Figure 4a2.7-1.

The PCLS removes heat directly from these heat transfer surfaces during normal operation and transients. Cooling water flows up from the lower plenum of the subcritical assembly support structure (SASS), past the TSV and neutron multiplier, and collects in the SASS upper plenum before returning to the PCLS heat exchanger.

Three cooling channels are formed by the SASS, TSV, neutron multiplier, and tritium target chamber. Cooling channel 1 (CC1) is the annular gap between the tritium target chamber and the multiplier inner shell exterior surface. Cooling channel 2 (CC2) is the annular gap between the TSV and neutron multiplier. Cooling channel 3 (CC3) is the annular gap between the TSV and the SASS inner baffle. Only CC2 and CC3 cool the TSV. The three cooling channels [ ]PROP/ECI. There is no coupling between cooling flows except at the SASS upper and lower plenums.

The PCLS volumetric cooling water flow rate is a minimum of [ ]PROP/ECI. At this total flow rate, the flow rate to CC2 is approximately

[ ]PROP/ECI, the flow rate to CC3 is approximately [ ]PROP/ECI.

The cooling water supply to the lower plenum of the SASS is at a pressure of up to approximately 20 pounds per square inch gage (psig) (138 kilopascal [kPa]) and a temperature of 59°F to 77°F (15°C to 25°C). The maximum PCLS cooling water temperature of 77°F (25°C) is used in the calculations presented in Subsection 4a2.7.5, below. This temperature limit is protected by the TSV reactivity protection system (TRPS) IU Cell Safety Actuation setpoints.

The TSV headspace pressure is maintained slightly below atmospheric pressure. The pressure over the target solution in the TSV is normally between -2 psig (-14 kPa) and 0 psig (0 kPa).

The cooling water pressure difference across the TSV within the SASS is less than approximately 7 psid (48 kPa), which accounts for entrance and exit pressure losses and frictional pressure losses in the cooling channels. See Table 5a2.2-1 for the PCLS parameters. As the primary cooling water is maintained far from boiling even at atmospheric pressures, pressure profiles of the cooling water in the flow channels are not important for the heat transfer characteristics of the system. Total cooling water flow rate and inlet temperature are principal variables of importance for heat transfer. These variables are monitored by the TRPS.

4a2.7.3.2 Chemical Effects Related to Heat Transfer

The TSV is constructed of 347 stainless steel. The target solution is chemically compatible with this alloy of stainless steel. When 347 stainless steel is placed in a uranyl-sulfate solution at temperatures up to 212°F (100°C), the steel retains its metallic luster, and only after long periods of time does it develop a very thin tarnish film (Lane, 1958).

Plating out of chemicals on the TSV surfaces is not expected in the operating temperature range of the SHINE process. Plating out of chemicals onto surfaces can occur via two mechanisms: a layer of non-volatile material can be left on surfaces when water is removed by boiling or vaporizing, or a layer of material can form when soluble components are electro-chemically reduced to a non-soluble state. The TSV is maintained at a nominal 120°F (50°C) during irradiation, which is well below the boiling point of water, even at a pressure slightly below atmospheric. No plating out of chemicals is expected from boiling because no boiling will occur in the TSV. Evaporation of and collection of solid salts on the TSV walls at the liquid surface is postulated; however, this does not affect the heat transfer as this will be above the liquid surface. Salts that are formed are expected to re-dissolve if they are rewetted due to differing solution heights between runs. There are multiple factors minimizing the opportunity for fission product ions to be reduced at the surface of the TSV. A stable, passive, non-porous oxide layer is quickly formed on the surface of the stainless steel. This will minimize plating out on the surface of the TSV. Therefore, plating out of chemicals on the TSV surfaces is not expected.

Potential precipitates are not expected to have significant effects on heat transfer in the TSV. Small amounts of precipitates could form in the target solution, as discussed in Section 4a2.2. However, the heat transfer surfaces are vertical, which reduces collection of settled precipitates. Suspended precipitates will also be separated from the target solution through the normal filtration of the molybdenum-99 extraction column during normal isotope extraction processes. Finally, precipitate masses are low, as indicated in Table 4a2.2-1, relative to masses that would be expected to affect heat transfer.

Temperature variation between cooling channels does not significantly affect flow distribution due to the short flow paths and limited temperature rise over the length of a channel.

4a2.7.3.3 Natural Circulation within the Target Solution

The higher temperature bulk target solution with colder target solution near the TSV vertical surfaces creates a chimney and downcomer effect. The bulk target solution (away from heat transfer surfaces) tends to travel upward due to buoyancy effects. The target solution tends to flow downwards in a layer near heat transfer surfaces because it is colder.

The natural convection velocities are not directly used in the heat transfer calculation process.

4a2.7.3.4 Temperature Profiles of Cooling Water

A heat transfer correlation-based calculational methodology is used that determines the average convection heat transfer coefficients. Therefore, the temperature profiles of the cooling water in the cooling channels are not directly calculated using the calculational methodology described in this section. At the TSV licensed power limit of 125 kW, the lowest potential flow rates of PCLS water, and a PCLS supply temperature of 68°F (20°C) [

]PROP/ECI.

4a2.7.3.5 Frictional and Buoyant Forces in PCLS

Frictional forces of the cooling water in the cooling channels are calculated using a friction factor derived from published literature for turbulent flow. The friction factor is used within its range of applicability and appropriate roughness factors are assumed.

There are no buoyant forces of relevance for the PCLS cooling water flow.

4a2.7.3.6 Effects Over Range of Flow Conditions

Thermal-hydraulic analysis is performed at the lowest allowable PCLS flow rate of [ ]PROP/ECI. PCLS design flow rate is [ ]PROP/ECI. Over the range of flow rates, the potential for vibration and subsequent wave generation from the cooling channels has been considered. The cooling channels are formed by rolled shells [ ]PROP/ECI that are supported at both ends. This configuration results in a rigid assembly with negligible potential for wave generation or propagation within the target solution.

4a2.7.3.7 Effects from Primary Cooling Water Breach

Due to the pressure differential between the PCLS and the TSV volume, it is expected that a breach of a TSV [ ]PROP/ECI would result in leakage of cooling water into the TSV volume. This will cause a dilution of the target solution and a reduction in the system k_{eff}. Some target solution may leak out of the TSV and into the PCLS in the event of a TSV [ ]PROP/ECI breach.

Target solution leakage into the PCLS is detectable by radiation monitors on the radiological ventilation zone 1 exhaust subsystem (RVZ1e) line ventilating the PCLS expansion tank. High

radiation in this exhaust line results in the TRPS initiating an IU Cell Safety Actuation, causing the closure of the PCLS supply and return isolation valves to minimize leakage of target solution outside of the IU cell. This would result in a change of the cooling water flow from forced to natural convection within the SASS.

The TRPS automatically initiates an IU Cell Safety Actuation following loss of PCLS flow. The TSV dump tank is submerged in the light water pool and sufficient cooling capacity is provided by natural convection.

Excessive in-leakage would result in overflowing the water and target solution mixture to the TSV dump tank through the overflow lines. This would result in TRPS initiating an IU Cell Safety Actuation and an IU Cell Nitrogen Purge based on liquid level detection in the TSV dump tank.

The chemistry changes from a breached [ ]$^{PROP/ECI}$ are not expected to result in precipitation of the uranium or other adverse chemistry effects.

4a2.7.3.8 Transition from Forced to Natural Convection

In the event of a loss of off-site power (LOOP), two scenarios are possible. For short duration LOOP events (nominally less than three minutes), the target solution normally remains in the TSV. The PCLS pumps will not function on a LOOP and PCLS flow will be lost.

For long duration LOOP events (nominally greater than three minutes), the target solution is dumped to the TSV dump tank. In the dump tank, the light water pool serves as the decay heat sink for the target solution.

When the target solution is still in the TSV with reduced or no PCLS flow and when the target solution is draining to the TSV dump tank, the target solution temperature has been calculated using bounding analyses that conservatively predict higher than actual temperatures. Target solution temperatures remain less than 194°F (90°C) during these phases.

Once target solution is in the TSV dump tank, bounding analyses have also been performed for the natural convection cooling in the dump tank. The highest target solution temperature reached in the TSV dump tank is less than 194°F (90°C).

The light water pool minimum water level is such that it can safely remove decay heat from the TSV dump tank. The minimum water level is specified in Subsection 4a2.7.6.

4a2.7.3.9 Above Core Gas Removal and Pool Cooling Systems

The TOGS serves as the above core gas removal system. TOGS sweeps cover gas through the TSV headspace, providing cooling to the TSV. Cooling by TOGS is not credited for the purposes of the thermal-hydraulic analysis of the TSV. Therefore, loss of TOGS does not affect the thermal-hydraulic analysis of the TSV. Loss of the TOGS will result in an IU Cell Safety Actuation due to low sweep gas flow rate, causing a dump of the target solution to the TSV dump tank where it is passively cooled by the pool water.

There are no heat exchangers that cool the light water pool. During Mode 2 irradiation, the pool is cooled by components within the pool that contain circulating PCLS cooling water. The pool is heated to slightly above PCLS temperature from radiation heating, and heat is transferred from

the pool through component walls to the PCLS cooling water. The pool is maintained within the temperature range of 50°F (10°C) and 95°F (35°C) during normal operation, and pool temperature is monitored. If PCLS cooling is lost, the irradiation process is shut down due to TRPS initiating an IU Cell Safety Actuation on low PCLS flow and high PCLS temperature.

Once target solution is in the dump tank during Mode 3, the pool provides passive decay heat removal. For calculating thermal-hydraulics and pool heatup in Mode 3, it is assumed that PCLS is not operating. This is an appropriate assumption as PCLS provides indirect cooling to the pool and assuming it is not operating will result in higher pool and target solution temperatures.

4a2.7.4 TARGET SOLUTION THERMAL POWER DENSITY DISTRIBUTION

The power density distribution for the limiting core configuration is shown in Figure 4a2.7-2. Calculated power density is shown for the axial and radial dimensions.

The power peaking factor is defined as:

$$Power\ Peaking\ Factor = \frac{Peak\ Target\ Solution\ Power\ Density}{Average\ Target\ Solution\ Power\ Density}$$

For the limiting core configuration, the power peaking factor is calculated to be [ ]PROP/ECI.

The heat flux along the cooling surfaces has been calculated from the limiting core configuration geometry and resulting neutron flux characteristics. The average heat flux into CC2 and CC3 is calculated to be approximately [

]PROP/ECI.

4a2.7.5 THERMAL-HYDRAULIC CALCULATIONS AND METHODOLOGY

Correlation-based methodology has been used for safety-related calculations of the TSV thermal-hydraulics. The calculational methodology is described in the subsections below. It has been developed based on the target solution specifications provided in Section 4a2.2. Properties of uranyl sulfate, such as density, specific heat, and viscosity are derived from literature values.

The power generated within the neutron multiplier and TSV is dissipated into the three cooling channels: CC1, CC2, and CC3. Only the multiplier rejects appreciable heat to CC1, because the tritium target chamber is internally cooled. CC2 receives heat from both the multiplier and TSV. Only the TSV rejects heat to CC3.

[

]PROP/ECI, as described in Subsection 4a2.7.1.3.

The methodology used is appropriate to the thermal-hydraulic operating conditions because it is based on experimental data applicable to the SHINE system, includes numerous conservatisms to account for the uncertainty in a first-of-a-kind system, and accounts for relevant engineering tolerances and uncertainties.

4a2.7.5.1 Primary Heat Transfer Resistances

The TSV cooling system is modeled with three parallel heat transfer paths from the target solution to the cooling water, as shown in Figure 4a2.7-3. The first path is from the target solution to the cooling water in CC2, the second path is from the target solution to the cooling water in CC3, [ ]PROP/ECI Heat transfer from the target solution to the lower plenum or to the TOGS sweep gas is ignored.

The differential between the target solution bulk temperature and the cooling water temperature drives the transfer of the heat generated in the target solution. Because the cooling water temperature increases as it flows through the cooling channel, the log mean temperature difference is used to calculate the heat transfer.

Cooling Water Forced Convection Resistance

Heat is transferred by convection from the exterior walls of the TSV to the PCLS cooling water forced through the cooling channels. The heat transfer coefficient is calculated from a correlation for turbulent internal forced convection used within its range of validity for Prandtl and Reynolds numbers.

The cooling water velocity in a single channel is used with the Darcy-Weisbach equation to calculate the head loss in the cooling channel, and friction factor is calculated with an appropriate turbulent flow friction factor formula.

Because all the cooling channels are connected to common plenums, they will have approximately the same cooling water head loss. Given the known pressure losses, velocities and volumetric flow rates are calculated for the flow channels. Total PCLS flow rate is the sum of the CC1, CC2, CC3, [ ]PROP/ECI flow rates.

The thermal resistance associated with the cooling water forced convection is then calculated as the inverse of the heat transfer coefficient multiplied by the area of heat transfer.

TSV Walls Conduction Resistance

The thermal resistance to radial conduction through the TSV walls is calculated using the thermal conductivity of the 347 stainless steel and the geometry of the heat transfer surfaces.

Target Solution Convection Resistance

To establish a heat transfer correlation for situations involving volumetric heat generation, volumetric bubble generation, cooled walls, and the [ ]PROP/ECI, heat transfer experiments were performed at University of Wisconsin – Madison (Bull, G., 2014). In the development of the refined correlation described below, existing correlations from literature were reviewed. [

]PROP/ECI

Volumetric heat generation was approximated using cartridge heaters. Volumetric bubble

generation was approximated by injecting a roughly uniform sheet of bubbles at the base of the vessel. The cooled vessel walls were made of stainless steel, and aluminum heat exchangers applied to the outer surface of these walls to simulate the cooled wall conditions. Both water and magnesium sulfate solution were used as surrogate target solution. The following heat transfer correlation was developed.

$$h = C_{10}k\left(\frac{gPr\beta\Delta T}{\nu^2}\right)^{\frac{1}{3}}\left(1 + C_{20}Pr^{\frac{3}{2}}\alpha^{\frac{1}{4}}\right)$$

Where:

- h is the average heat transfer coefficient
- C_{10} is the single phase coefficient, 0.097 for water and magnesium sulfate solutions
- k is the thermal conductivity of the solution
- g is gravitational acceleration
- Pr is the Prandtl number of the solution
- β is the volumetric thermal expansion coefficient of the solution
- ΔT is the temperature difference between the bulk solution and the interior walls of the vessel
- ν is the kinematic viscosity of the solution
- C_{20} is the multiphase coefficient, 0.57 for water and 0.3 for magnesium sulfate solutions
- α is the average void fraction of the solution

Coefficient values of C_{10} and C_{20} are assumed to be those of magnesium sulfate. Magnesium sulfate solution was used as a uranyl sulfate solution surrogate (0.54 molar solutions of the Mg2+ ions and pH either at 7 or lowered to 1 using sulfuric acid) in the experiments. The magnesium sulfate properties of relevance to the heat transfer were considered and found sufficiently similar to use the surrogate data.

The thermal resistance associated with the target solution convection is then calculated as the inverse of the heat transfer coefficient multiplied by the area of heat transfer.

4a2.7.5.2 TSV Manufacturing Tolerances

Because of the narrow width of the TSV cooling channels, small variations of diameters from nominal make an appreciable effect on cooling water distribution. This effect has been conservatively accounted for by calculating flow re-distribution given some channels being narrower than nominal and some channels wider than nominal. The channels with a greater hydraulic diameter have a higher velocity and flow area, leading to substantially higher cooling water flow rates and consequently heat transfer. The total flow rate is adjusted in the analysis to maintain the minimum value of [ ]PROP/ECI.

For conservatism, cooling calculations were then performed using the narrower channels and lower velocities.

Thickness tolerances on the TSV walls were also applied as appropriate to maximize conduction resistance through the TSV walls.

4a2.7.5.3 Fouling Resistance

SHINE has considered the buildup of any layers that might reduce heat transfer on the interior and exterior of the TSV heat transfer surfaces.

PCLS water is maintained at high purity as discussed in Section 5a2.2. During operation, a small amount of fouling may occur in the PCLS cooling channels. This reduction in heat transfer is accounted for by using a literature value for fouling heat transfer coefficients applicable to distilled water.

While the target solution is acidic and will tend to resist the formation of films, a fouling heat transfer coefficient is also assumed for the target solution side of the TSV. Literature data for fouling by uranyl sulfate was not available. An estimated value was assumed based on cooling water fouling in salt water. During operation of the TSV, the TSV thermocouples may be used to trend increases in target solution temperature over time caused by fouling.

The thermal resistance associated with the fouling is then calculated as the inverse of the heat transfer coefficient multiplied by the area of heat transfer.

4a2.7.5.4 Target Solution Temperature Nonuniformities

Experimental results at University of Wisconsin – Madison (Bull, G., 2014) indicate negligible thermal stratification of the surrogate target solution, despite a cooling water temperature rise of 18°F (10°C) between the bottom and the top of the test vessel that carried through to the test vessel inner wall surface in the experiments performed.

The generation of heat in the target solution will not be uniform. To evaluate the effect of non-uniform power generation, Bull, G., 2014 used both short and long cartridge heaters to study the sensitivity of the power density. It was determined that the more concentrated heat generation of the short heaters did not impact the heat transfer coefficient significantly. Total change in heater power density was 480 percent, while change in inner wall to bulk solution temperature difference was less than 3.6°F (2°C).

To bound credible temperature nonuniformities, the following method is used. Bulk fluid is assumed to rise from the bottom of the TSV to the target solution surface with downward recirculation along the cold walls, similar to the chimney effect. For a small control volume of fluid rising in the bulk, it is assumed to be only heated by the irradiation process, with no heat removal during the ascent.

The power deposition in the control volume during the ascent is taken to be the calculated power deposition in the vertical target solution column with the greatest power deposition.

The velocity of the upward flow is estimated based on conservation of mass principle and the calculation of the downward flow rate along the cold walls. The downward flow rate is calculated based on the boundary layer characteristic velocity and the fully developed thickness of the target solution boundary layer. A flat plate approximation is assumed.

A transit time is calculated based on the distance from the bottom of the TSV to the target solution surface and the velocity of the upward flow.

The total temperature rise is calculated based on the power density in the control volume, the transit time, the solution heat capacity, and solution mass density.

Finally, the peak temperature is determined by adding the temperature rise to the average temperature. Adding the total temperature rise to the average temperature is conservative, as some of the temperature rise will occur at temperatures below the average temperature.

4a2.7.5.5 Target Solution Void Fraction

TSV void fraction during irradiation has been calculated assuming using a bubble nucleation and growth model in the target solution. Bubble size and velocity was calculated assuming various TSV power levels, solution temperatures, and solution updraft speeds. The void fraction of the target solution during steady-state operation is then calculated based on the transit time of the bubbles and total gas generation rates.

Void fraction is necessary to estimate the target solution convection heat transfer coefficient. The void fraction is determined using the upward target solution velocity described in Subsection 4a2.7.5.4. The void fraction determination also assumes:

- The radiolytic yield of hydrogen, G_{H2}, is less than the G_{H2} that correlates to [ ]$^{PROP/ECI}$. G_{H2} decreases with increasing uranium concentration, and [ ]$^{PROP/ECI}$ bounds the allowable uranium concentrations. A lower G_{H2} value decreases void fraction.
- The radiolytic yield of oxygen, G_{O2}, is half that of hydrogen, G_{H2}.
- Dissolved gas concentrations remain constant at the critical concentration necessary for bubble nucleation in the solution.
- Generation of radiolysis gas within the target solution follows a fixed characteristic spatial distribution.
- Target solution fluid properties are uniform over the solution bulk.
- Bubbles are generated volumetrically within the solution and not at the solution-vessel interface.

The resulting average void fraction for the limiting core configuration was calculated to be at least [ ]$^{PROP/ECI}$ void at 469,000 Btu/hr. (137.5 kW). The void fraction value is then used in the equation specified in Subsection 4a2.7.5.1.

4a2.7.5.6 Calculation Results

The safety calculations performed using the methodology described above show that the target solution temperatures do not exceed the limits provided in Table 4a2.2-1.

The peak target solution temperature in the TSV is not more than 194°F (90°C), which assures no significant boiling in the TSV.

Furthermore, the bulk target solution temperature in the TSV is not more than 176°F (80°C). This bulk temperature is a limit for the TSV dump tank to assure no significant boiling once the solution has been dumped.

4a2.7.5.7 Accuracy of Analytical Methods

The analytical methods described above for calculating the heat transfer from the TSV and resulting target solution temperatures are based on experimental correlations and calculational simplifications. Inherent inaccuracy exists in the calculation methodology. To ensure conservative results, the simplifications were made using bounding assumptions.

The experimentally determined natural convection heat transfer correlation described in Subsection 4a2.7.4 was compared to available literature correlations. For relevant system parameters, the target solution natural convection heat transfer coefficient calculated with the methodology presented in this section was less than 50 percent of the heat transfer coefficient calculated using the heat transfer correlation for vertical surfaces with bubble agitation provided in NUREG/CR-0944, Hydrodynamics and Heat Transfer Characteristics of Liquid Pools with Bubble Agitation (NRC, 1979).

4a2.7.6 IMPACT OF OPERATING CONDITIONS ON THERMAL-HYDRAULICS

The target solution temperature and pressure limits are provided in Table 4a2.2-1 and Subsection 4a2.2.1.6, respectively. Temperature and pressure limits ensure that the target solution does not undergo boiling. Pressure of the target solution is controlled by the TOGS, as described in Section 4a2.8. Should a TOGS pressure control malfunction occur, minimum pressure is maintained in the PSB by vacuum relief valves on the TSV.

The cooling water conditions that ensure that target solution temperature limit is not exceeded are:

- PCLS minimum flow rate of [ ]PROP/ECI
- PCLS maximum temperature at inlet to TSV of 77°F (25°C)

The calculations in Subsection 4a2.7.5 determine that these cooling conditions are sufficient for the TSV at 469,000 Btu/hr. (137.5 kW) of steady fission power in the limiting core condition. The limiting core condition is the core with the highest possible power density.

Excessive Cooldown

Excessive cooldown of the TSV has been evaluated. The excessive cooling has no adverse consequences to the thermal-hydraulic analysis, but does lead to positive reactivity insertion. These effects are evaluated in Subsection 1.1.3.2.

Shutdown decay heat

Shutdown decay heat is normally removed by the light water pool surrounding the TSV dump tank. Decay heat can also be removed in the TSV if PCLS cooling is available. As decay heat is substantially less than the operating power, the decay heat removal in the TSV by PCLS is bounded by the analysis described above.

TSV dump tank heat removal to the pool has been conservatively evaluated in the TSV dump tank. The analysis is performed with the following methodology:

- TSV fission power prior to shutdown was taken at 469,000 Btu/hr. (137.5 kW).
- The bulk target solution temperature during irradiation (prior to shutdown) is less than 176°F (80°C). The analysis in Subsection 4a2.7.5 shows this condition is met.
- Natural convection for a horizontal flat plate with heated surface facing downward is assumed between the TSV dump tank outer shell and the light water pool.
- Horizontal tube internal natural convection is assumed between the TSV dump tank inner shell and the light water pool.
- Permutations of tolerances were evaluated to ensure conservative results.
- The light water pool is maintained at a minimum water level of not less than [ ]PROP/ECI below finished floor (water depth of approximately [ ]PROP/ECI for the duration of the analysis.
- Target solution is assumed to remain in the TSV for up to 3 minutes prior to dump valve opening.
- Opening time of the dump valve is not more than 30 seconds.
- Drain time of the TSV is calculated assuming only one dump valve opens.

The thermal mass provided by the light water pool provides sufficient decay heat removal capacity to provide cooling for the target solution.

The peak target solution temperature is calculated to be less than 194°F (90°C). The target solution remains below operating limits and no boiling occurs in the TSV dump tank. Figure 4a2.7-4 shows the target solution peak and wall temperatures calculated during the event.

The minimum allowable light water pool water level is not lower than [ ]PROP/ECI below finished floor. The temperature rise in the light water pool is not more than [ ]PROP/ECI after a decay heat period of [ ]PROP/ECI, assuming the pool is at the minimum allowable level and no cooling to the pool (see Figure 4a2.4-1).

Assuming a nominal pool water level and no cooling to the pool, the temperature rise in the light water pool is not more than 13°F (7°C) after a decay heat period of 90 days.

Shutdown decay heat is satisfactorily removed from the target solution.

Planned Pulses and Transients

The TSV has been analyzed for transient conditions, including those that generate power pulses. See Section 1.1 (Nuclear Design), Subsection 13a2.1.2 (Insertion of Excess Reactivity), Subsection 13a2.1.3 (Reduction in Cooling), Subsection 13a2.1.5 (Loss of Off-Site Power), Subsection 13a2.1.8 (Large Undamped Power Oscillations), and Subsection 13a2.1.9 (Detonation and Deflagration in the Primary System Boundary).

Most transients that result in excessive power generation are short in duration due to the highly negative temperature and void feedback coefficients and the TRPS IU Cell Safety Actuation due to high neutron flux. As a result, the transients generally do not result in significant increases in bulk target solution temperature.

The analyzed transient resulting in the most limiting temperature is the transient bounded by the TRPS high neutron flux trips. The TSV is assumed to be undergoing irradiation at the maximum average power limit, which is protected by the TRPS high time-averaged neutron flux trip. Irradiation is then assumed to cease, with the power dropping to zero. Following the dropout, the TSV is assumed to experience a power transient with a magnitude equal to the TRPS high wide range neutron flux trip. The period of zero power before the transient results in a longer duration of the power transient prior to the flux trip initiating an IU Cell Safety Actuation. After the IU Cell Safety Actuation has occurred, the driver shuts down and the target solution drains to the TSV dump tank. The target solution temperature continues to rise from fission by delayed neutrons and from fission product decay heat as the target solution drains.

Assuming the limiting core configuration, the transient is calculated to result in a peak solution temperature of less than the target solution operating temperature limit of 176°F (80°C). Other transients result in lower peak solution temperatures.

Changes with Burnup

Beginning-of-life and end-of-life target solution effects have been considered in the thermal-hydraulic design of the system.

Total power of the TSV is limited to 427,000 Btu/hr. (125 kW) regardless of solution burnup. Solution burnup has negligible effects on solution power distribution. There are no significant changes in void production with burnup.

The steady state heat transfer methodology is described in Subsection 4a2.7.5. This methodology is bounding with regards power density changes with solution burnup. Fouling has been considered in the analysis.

The transient analyses have considered the effects of target solution burnup. Burnup has minimal effect on the target solution reactivity coefficients due to the low power density of the solution and frequent extraction of radionuclides for medical isotope production. The methodology used to calculate the temperatures resulting from power transients bounds the effects of solution burnup.

4a2.7.7 TARGET SOLUTION CONDITIONS TO ENSURE VESSEL INTEGRITY AND PREVENT BOILING

Target solution limits are established to prevent boiling and ensure the integrity of the PSB. The target solution limits relevant to the thermal-hydraulics analysis are power density, minimum pressure, maximum temperature, pH, and [ ]$^{PROP/ECI}$ concentration.

The power density limit is established for stability and precipitation requirements. The limiting core configuration, which is the maximum power density core, is an input to the thermal-hydraulic analysis. The power density limits are discussed in Subsection 1.1.3.4.

Target solution minimum pressure is limited to prevent boiling. Because the TOGS and the TSV are connected, target solution headspace pressure is controlled by the TOGS. Gas pressure in the TSV headspace is regulated to -2 psig (-14 kPa) to 0 psig (0 kPa). Failure of TOGS pressure regulation is analyzed in Subsection 13a2.1.8. Should a TOGS control system malfunction occur, minimum pressure in the TSV is maintained through vacuum relief valves in on the TSV. The

vacuum relief valves ensure target solution headspace pressure is at least 10.2 pounds per square inch absolute (psia) (70.3 kPa).

The target solution temperature is driven by system neutron flux. The analysis shows that the target solution temperature is maintained below 194°F (90°C) if PCLS flow is maintained above [ ]PROP/ECI and PCLS temperature entering the SASS lower plenum is maintained below 77°F (25°C). The acceptable temperature distribution that ensures PSB integrity and prevention of target solution boiling is peak target solution temperature less than 194°F (90°C) and average target solution temperature (within the TSV) less than 176°F (80°C). Any temperature distribution meeting these requirements is acceptable.

The other operating limits of the target solution are shown in Table 4a2.2-2. Target solution pH and [ ]PROP/ECI additives are maintained within allowable limits as specified in the technical specifications. The pH and [ ]PROP/ECI are required to ensure solubility of the uranium and avoid precipitation. Target solution pH is stable under irradiation.

There are no controls on fission product solubility to ensure the integrity of the PSB or prevent solution boiling. The potential precipitates have been calculated and are provided in Section 4a2.2.

4a2.7.8 COOLING SYSTEM DESIGN BASES

The design bases for the PCLS are described in Section 5a2.2. SHINE does not have an emergency cooling system for the TSV, as the light water pool provides sufficient passive heat removal capabilities.

Cooling for the TOGS is provided by RPCS. RPCS design bases are provided in Section 5a2.3.

There is no light water pool forced cooling system. Heat is removed primarily indirectly by PCLS through components submerged in the light water pool that are cooled by PCLS.

Reduction in cooling scenarios in the TSV occur due to loss of the ability of PCLS to provide cooling. Loss of PCLS results in an IU Cell Safety Actuation on low PCLS flow or high PCLS temperature, depending on the cause of reduction in cooling. The decreased cooling results in increased bulk temperatures in the TSV prior to target solution transfer to the TSV dump tank. Temperatures of the target solution remain below 194°F (90°C), as described in Subsection 4a2.7.6. Reduction in cooling scenarios are also addressed in Subsection 13a2.1.3.

Natural convection cooling in the TSV dump tank to remove decay heat is discussed in Subsection 4a2.7.6.

4a2.7.9 BULK BOILING OF THE TARGET SOLUTION

The operational limits to prevent bulk boiling in the target solution vessel are:

- TSV fission power less than 469,000 Btu/hr. (137.5 kW) during normal operation.
- PCLS cooling water flow rate greater than [ ]PROP/ECI.
- PCLS cooling water temperature entering the SASS lower plenum of less than 77°F (25°C).
- PSB minimum pressure of 10.2 psia (70.3 kPa).

- Target solution uranium concentration within limits of Table 4a2.2-2 to ensure power density of the limiting core condition is bounding.

TSV fission power, PCLS cooling water flow rate, and PCLS cooling water temperature, are protected by the TRPS. PSB minimum pressure is protected by vacuum relief valves in TOGS.

Temperature monitoring of the target solution is also provided for indication to the operators. Temperature elements are located within thermowells contained within the TSV. Measurements are provided at multiple heights in order to compare TSV temperature profiles to expected profiles.

4a2.7.10 TECHNICAL SPECIFICATIONS

Certain material in this section provides information that is used in the technical specifications. This includes limiting conditions for operation, setpoints, design features, and means for accomplishing surveillances. In addition, significant material is also applicable to, and may be referenced by the bases that are described in the technical specifications.

Proprietary Information – Withheld from public disclosure under 10 CFR 2.390(a)(4)
Export Controlled Information – Withheld from public disclosure under 10 CFR 2.390(a)(3)

Figure 4a2.7-1 – Target Solution Vessel Heat Transfer Surfaces

Proprietary Information – Withheld from public disclosure under 10 CFR 2.390(a)(4)
Export Controlled Information – Withheld from public disclosure under 10 CFR 2.390(a)(3)

Figure 4a2.7-2 – Limiting Core Configuration Power Density (kW/L)

Proprietary Information – Withheld from public disclosure under 10 CFR 2.390(a)(4)
Export Controlled Information – Withheld from public disclosure under 10 CFR 2.390(a)(3)

Figure 4a2.7-3 – Target Solution Vessel Heat Transfer Paths

Figure 4a2.7-4 – Target Solution Vessel Dump Tank Bounding Temperature Profile

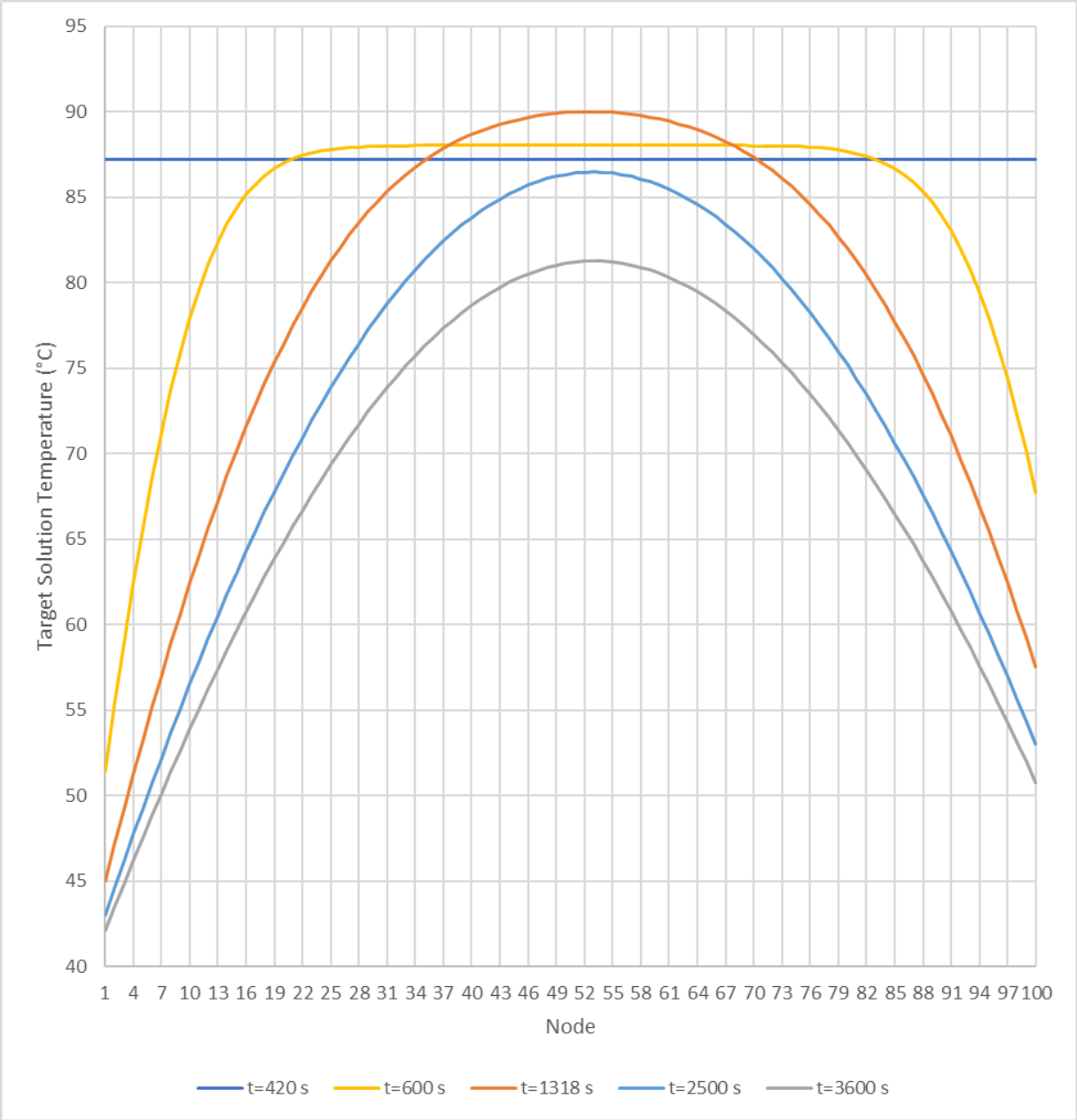

Notes:

- Time is measured after shutdown of the irradiation unit (IU). The analysis starts at 420 seconds.
- Node 1 is located at the target solution vessel (TSV) dump tank inner shell interior surface.
- Node 100 is located at the TSV dump tank outer shell interior surface.

4a2.8 GAS MANAGEMENT SYSTEM

4a2.8.1 SYSTEM DESCRIPTION

The gas management system is the target solution vessel (TSV) off-gas system (TOGS). The TOGS removes radiolysis gases and a portion of the iodine in the gas space from the TSV during irradiation operation and from the TSV dump tank during target solution cooldown to maintain concentrations within safe limits.

The TOGS equipment is located in the TOGS cell and irradiation unit (IU) cell. A total of eight independent instances of TOGS are installed in the irradiation facility (IF), one for each IU. Each instance of TOGS consists of two separate recombiner loops, both of which must be operating during irradiation. One recombiner loop is equipped with hydrogen sensors, oxygen sensors, and a zeolite bed for iodine capture. During a loss of off-site power (LOOP), at least one recombiner loop must continue to operate for a short period of time to assure safe shutdown.

4a2.8.2 SYSTEM PROCESS AND SAFETY FUNCTIONS

The process functions of the TOGS are listed below:

- TOGS sweeps the TSV headspace to dilute radiolytic hydrogen generated by the target solution in the TSV during irradiation, maintaining bulk hydrogen concentration within the primary system boundary (PSB) below the lower flammability limit (LFL) to prevent deflagration during normal operation.
- TOGS sweeps the TSV dump tank headspace to dilute radiolytic hydrogen generated by the target solution in the TSV dump tank during shutdown conditions, maintaining bulk hydrogen concentration within the PSB below the LFL to prevent deflagration during normal operation.
- TOGS absorbs iodine in the sweep gas to maintain iodine concentrations within the PSB gas space below the limits defined by the safety analysis.
- TOGS condenses water vapor generated by the target solution in the TSV and returns the condensate to the TSV to limit water holdup in TOGS to less than 3 liters.
- TOGS captures target solution droplets entrained in the sweep gas and returns them to the TSV to minimize buildup of fissile material in TOGS.
- The sections of the TOGS pressure boundary that form a portion of the PSB provide containment of fission product and decay product gases generated during target solution irradiation and cooldown.
- TOGS maintains the pressure within the PSB slightly sub-atmospheric with respect to the IU cell during normal conditions.

The safety functions of the TOGS are listed below:

- Provide confinement of target solution and fission products as part of the PSB to prevent release of radioactive material that could cause undue risk to health and safety of workers and the public.
- Maintain hydrogen concentrations below values which could result in a hydrogen explosion overpressure capable of rupturing the PSB, preventing release of radioactive material that could cause undue risk to health and safety of workers and the public.
- Remove a portion of the iodine from the sweep gas to mitigate the dose consequences of accidents involving loss of PSB integrity.

4a2.8.3 TSV OFF-GAS PROCESS FLOW DIAGRAM

Figure 4a2.8-1 shows the process flow diagram of the TOGS and its major components.

4a2.8.4 TOGS MAJOR COMPONENTS AND SYSTEM INTERFACES

Table 4a2.8-1 lists the major components in the TOGS shown in Figure 4a2.8-1. The description of the components includes the design codes and standards of these TOGS components. Also provided in Table 4a2.8-1 are major dimensions of the principal TOGS components. A discussion of the favorable geometry of the TOGS components is described below in Subsection 4a2.8.5.

The TOGS components are designed based on the following TSV operating envelope and conservative design assumptions for the gas leaving the TSV headspace:

- Gas temperature: The range of temperatures for gas leaving the TSV headspace is based on the sweep gas supply temperature from TOGS and the heat transfer rate between the sweep gas and the target solution at a temperature range of 50°F (10°C) to 194°F (90°C).
- Gas pressure: -4.5 pounds per square inch gauge (psig) (-31 kilopascals [kPa] gauge) to 15 psig (103 kPa gauge).
- Steady state hydrogen production rate: up to approximately 3.8E-2 grams/second.
- Relative humidity: The relative humidity for gas leaving the TSV headspace is based on the evaporation rate of the target solution at a maximum temperature of 194°F (90°C).

The component designs are based on the normal operating envelope, anticipated transients, and conservative assumptions, and then additional design margin is included in the capacity of each of the components. The design margin applied is specific to the component being analyzed, and the amount of design margin includes consideration for the importance of that component to affecting the capacity of TOGS and the potential variability of the relevant process parameters.

Table 4a2.8-2 provides a listing of the TOGS interfaces with interconnecting systems.

The specified materials of construction of the TOGS components are chemically compatible with the evolved fission product, radiolytic, and sweep gases. Major TOGS components are made of austenitic stainless steel. Unlike nitric acid systems, sulfuric acid is stable under irradiation. Seals/gaskets are chemically compatible with the process fluids. This ensures that possible corrosion damage to the system is reduced. The TOGS components are designed and fabricated in accordance with the codes and standards listed in Table 4a2.8-1.

The TOGS components are designed to withstand system pressures that could occur during credible TSV power fluctuations to avoid breaching the PSB. The components are designed to withstand credible hydrogen deflagrations.

The TOGS condenses water vapor and returns the water to the TSV. This also serves to conserve water in the system. The reactivity effects of water retention in TOGS are provided in Subsection 1.1.1.

The primary confinement boundary is designed to limit the release of radioactive and hazardous materials in the event that the TOGS leaks into the TOGS shielded cell or IU cell. See Section 6a2.2 for a detailed description of confinement.

4a2.8.5 ABNORMAL CONDITIONS

The TOGS components are part of the PSB for fission products in the system.

The controls discussed in Chapter 13 ensure that for accidents involving TOGS, dose consequences for the public and workers are within acceptable limits.

Hydrogen recombiners prevent the hydrogen concentration from reaching a level where a deflagration or detonation could occur during normal operation or transients that are expected to occur.

As discussed in Subsection 13a2.1.9, during some unlikely accident scenarios, hydrogen may reach deflagration concentrations. The maximum credible deflagration in these accident scenarios results in a pressure of less than 65 pounds per square inch absolute (psia) (448 kPa absolute), and this pressure does not violate the PSB safety limits or lead to the release of radioactive materials. The effects of the pressure increase on the TSV reactivity are acceptable and discussed in Subsection 13a2.1.2.

If the neutron driver shuts down due to power loss or an off-normal event, the blowers and recombiner beds continue to operate while the hydrogen production rate subsides. If off-site power is still available to TOGS, the system continues to operate normally. If a LOOP occurs, the uninterruptible electrical power supply system (UPSS) provides emergency power for the blowers and recombiner heaters for a 5-minute duration. This period of TOGS operation provides for adequate sweep gas flow for the target solution while it is being transferred to the TSV dump tank and while hydrogen generation rates decrease to decay levels. Both trains are provided with UPSS power and both will continue to operate on a LOOP. Three minutes after the LOOP occurs, the ESFAS will initiate an IU Cell Nitrogen Purge based on the UPSS loss of external power signal, to provide continuous combustible gas management.

Once in the TSV dump tank, hydrogen generation from radioactive decay is mitigated by normal operation of the TOGS.

If TOGS is inoperable, the hydrogen buildup is mitigated by the nitrogen purge system (N2PS), which injects nitrogen gas into the TSV dump tank. The injected nitrogen dilutes the hydrogen released by the target solution. The nitrogen sweep gas mixture is released through a high point vent on TOGS, which transfers the sweep gas mixture to the process vessel vent system (PVVS). The N2PS system begins injecting gas upon indication of a loss of TOGS flow or electrical power while in modes requiring TOGS operation. Loss of TOGS flow is evaluated in Subsection 13a2.1.9. Upon a loss of normal electrical power, N2PS injection ensures that hydrogen concentrations in the PSB are maintained below 3 percent by volume. The N2PS injection starts after approximately 3 minutes post-LOOP, unless a failure of TOGS is detected, in which case it starts immediately. Details on the N2PS are provided in Subsection 9b.6.2.

The normal operation of the TOGS maintains hydrogen concentrations at or less than 2 percent in the off-gas.

There is no significant nitrogen oxide (NO_x) gas present in the off-gas; therefore, there is no postulated accident scenario resulting in the release or accumulation of NO_x gas. The SHINE target solution is a sulfuric/sulfate system. Nitric acid is not used to prepare the target solution or to adjust the target solution chemistry.

Additionally, no significant amount of SO_x gas is present in the off-gas. Sulfuric/sulfate was chosen as the acid/counter ion system because of the stability it maintains in the presence of radiation. Furthermore, the vapor pressure of sulfuric acid is known to be extremely low, so very little SO_x gases will leave the liquid phase. Therefore, it is not necessary to consider scenarios related to SO_x gas in the abnormal conditions of the TOGS.

Pressure safety valves are connected to the PSB piping to passively prevent an over-pressurization of the PSB, which may cause structural damage to the IU or malfunction of TOGS. The setpoint of the pressure safety valves does not exceed the design pressure of the PSB components. The pressure safety valves are connected to the PVVS. PVVS is capable of receiving the calculated maximum gas relieving rate from TOGS. The relief gas is then processed through the PVVS filters, guard beds, and carbon delay beds to remove particulates, remove iodine, and sufficiently delay noble gas release. This process ensures that the radioactive release and dose requirements of 10 CFR 20 are met. See Subsection 9b.6.1 for a discussion on the PVVS.

Transients can occur in the nuclear system due to pressure fluctuations, neutron driver interruptions, cooling system malfunctions, and other causes. See Subsection 1.1.1 for kinetic behavior of the TSV. Variations in TSV power lead to variations in hydrogen and oxygen generation rates. TOGS is designed to handle transient and accident hydrogen generation rates while maintaining hydrogen concentrations in the PSB below those that could cause damage to the PSB.

SHINE has considered the long-term accumulation of fissionable material entrained in the system. Long term accumulation of material could lead to flow blockages and subsequent system malfunction, or it could present a hazard for inadvertent criticality. Inadvertent criticality is discussed below. Monitoring is performed for flow blockages due to long term accumulation of material by periodically trending system flow rates. Long term accumulation would result in changes in pressure drops in the system, especially in the demisters and catalytic recombiner beds.

4a2.8.5.1 Protection Against Inadvertent Criticality

The potential exists for fissile material from the TSV, such as uranium solution droplets, to enter TOGS. Water leakage from the light water pool could cause flooding of the target solution into TOGS. Droplet carryover from TOGS could lead to uranium entrainment in TOGS. Fissile material, without proper design, could lead to inadvertent criticality in TOGS.

To prevent the potential for an inadvertent criticality in TOGS, the sections of TOGS that form a portion of the PSB are designed to be geometrically favorable if fully flooded. Analyses are performed in accordance with the methodology described in Subsection 1.1.2.6.1. The TOGS k_{eff} analysis is evaluated at the most reactive credible uranium concentration, which ensures the system will be subcritical at any uranium concentration. As discussed in Subsection 1.1.2.6.1, TOGS is designed to a k_{eff} value of less than 0.94 at the most reactive credible uranium concentration and at cold conditions.

Since TOGS is designed to be at a k_{eff} below 0.94 even if fully flooded at the most reactive credible uranium concentration, TOGS is protected against inadvertent criticality.

4a2.8.6 RADIATION AND HYDROGEN CONCENTRATION CONTROL/MONITORING

The TOGS is connected to the vacuum transfer system (VTS) for purging between irradiations, as needed. The VTS discharges collected TOGS gases to the PVVS, where they are treated through the PVVS filters, guard beds, and carbon delay beds. Purging the off-gas to the VTS allows SHINE to decrease gaseous fission products contained within the system. TOGS is purged to VTS prior to maintenance operations in which lower dose rates in and surrounding the TOGS equipment are desired. The TOGS components are designed and shielded to limit personnel exposure to radiation.

Hydrogen concentration monitoring instrumentation is included to measure the concentration of hydrogen in the TOGS piping. The TOGS is designed to maintain hydrogen concentrations at or less than 2 percent during normal operation.

If the hydrogen concentration exceeds 2.5 percent by volume, an alarm alerts the operator to take action. If the neutron driver is shut down, the blowers and recombiners remain active to circulate and recombine the hydrogen and oxygen in the off-gas.

The alarm setpoint of 2.5 percent is slightly higher than normal operating conditions to provide advanced warning of abnormal conditions to the operator prior to reaching the operating limit of 3 percent while not resulting in excessive alarms that distract the operators in the control room. The hydrogen concentration limit of 3.0 percent provides sufficient margin to hydrogen concentrations that could result in a deflagration pressure exceeding 65 psia should the failure of a single active component occur. A minimum TOGS mainstream flow of [ ]$^{PROP/ECI}$ and a TOGS dump tank flow of [ ]$^{PROP/ECI}$ is required to ensure hydrogen can be maintained below this limit.

The worst postulated single active failure is that of the blower ventilating the TSV dump tank. The TSV reactivity protection system (TRPS) detects loss of flow and initiates an IU Cell Safety Actuation and an IU Cell Nitrogen Purge. This opens the TSV dump valves and de-energizes the high voltage power supply to the neutron driver, rapidly reducing hydrogen production. Conservatively assuming that the TOGS and TSV were uniformly at 3.0 percent hydrogen concentration prior to the trip, the peak hydrogen concentration has been calculated. This peak hydrogen concentration results in deflagration pressures less than 65 psia assuming a deflagration occurred immediately at the peak concentration.

Oxygen concentration monitoring instrumentation is also included to measure the concentration of oxygen in the TOGS piping. Oxygen holdup in the target solution can lead to non-stoichiometric releases of hydrogen and oxygen from the solution. A minimum oxygen concentration of 10 percent is required to ensure hydrogen recombination in the TSV off-gas recombiner occurs satisfactorily.

TOGS condenser demister outlet temperature sensors monitor the health of the condenser demisters. A temperature over 25°C is indicative of a failure of the condenser demister, which could lead to increased water holdup in TOGS and potential reduction in hydrogen recombination. In the event of a failure, the TRPS would initiate an IU Cell Nitrogen Purge.

The hydrogen concentration measurements are taken in the TOGS after the TSV off-gas condenser demister and before the TSV off-gas recombiner, which provides a measurement at the highest expected concentration in TOGS. Instruments are located in a measurement sidestream, which allows for increased shielding from the process gas. Oxygen concentration measurements are taken in the same sidestream as the hydrogen measurements. See Figure 4a2.8-1 for the location of the TSV off-gas condenser demister, TSV off-gas recombiner, and measurement sidestream.

4a2.8.7 PROTECTION AGAINST INOPERATIVE TOGS

The instrumentation inputs from the TOGS to the TRPS ensure the ability to reach safe shutdown under normal and accident conditions, including an inoperative or blocked TOGS train or loss of cooling to the condensers. These inputs include the following:

- Low TOGS oxygen concentration
- Low TOGS mainstream flow (Train A)
- Low TOGS mainstream flow (Train B)
- Low TOGS TSV dump tank sweep gas flow
- High TOGS condenser demister outlet temperature (Train A)
- High TOGS condenser demister outlet temperature (Train B)

See Section 7.4 for further discussion on the TRPS trips.

Upon actuation signals from TRPS, the following piping lines are isolated in TOGS to meet safety-related criteria:

- Vacuum tank outlet: Two vacuum tank automatic isolation valves in series provide redundant isolation capabilities.
- Gas inlet line: Two gas inlet automatic isolation valves in series provide redundant isolation capabilities.
- TOGS radioisotope process facility cooling system (RPCS) supply line: Two cooling water automatic isolation valves in series provide redundant isolation capabilities.
- TOGS RPCS return line: One cooling water automatic isolation valve and one check valve in series provide redundant isolation capabilities.

See Section 7.4 for further discussion on TRPS actuation of TOGS components.

See Section 5a2.3 for further discussion on the RPCS.

4a2.8.8 TECHNICAL SPECIFICATIONS

Certain material in this section provides information that is used in the technical specifications. This includes limiting conditions for operation, setpoints, design features, and means for accomplishing surveillances. In addition, significant material is also applicable to, and may be referenced by the bases that are described in the technical specifications.

Table 4a2.8-1 – TSV Off-Gas System Major Components
(Sheet 1 of 3)

Component	Description	Major Dimensions	Principal Design Code/Standard
Condenser demister	The condenser demister includes both condenser coils and a demister element in a single housing. The condenser portion cools the target solution vessel (TSV) off-gas system (TOGS) sweep gas leaving the TSV and condenses the water vapor generated by evaporation of the target solution in order to protect the zeolite bed and instrumentation from high temperatures and high humidity. The demister portion of the condenser demister unit removes entrained target solution droplets and condensate droplets from the sweep gas to protect the TOGS from target solution and to protect the zeolite bed and instrumentation from moisture. The TSV off-gas condenser demister is geometrically favorable.	[ ]PROP/ECI diameter shell	ASME BPVC Section VIII (ASME, 2010)
Instrument demister	The instrument demister is a demister element in a pressure vessel housing. The instrument demister is used to detect a malfunction of the condenser demister unit capable of interfering with the operation of the TOGS gas concentration measurement instrumentation. The instrument demister contains a level indicator in its sump to detect water droplet carryover from the condenser demister unit. Only TOGS train A is equipped with an instrument demister. The TSV off-gas instrument demister is geometrically favorable.	[ ]PROP/ECI diameter shell	ASME BPVC Section VIII (ASME, 2010)

Table 4a2.8-1 – TSV Off-Gas System Major Components
(Sheet 2 of 3)

Component	Description	Major Dimensions	Principal Design Code/Standard
Zeolite bed	The zeolite bed is composed of a housing fitted with a cartridge packed with silver-coated zeolite granules, restrained by a screen or similar device. The zeolite bed is located in a side stream separate from the main TOGS sweep gas loop and receives a percentage of the overall sweep gas flow. The zeolite bed strips the iodine from the sweep gas passing through it to reduce the inventory of iodine in the primary system boundary gas space. Only the TOGS train B is equipped with a zeolite bed. The TSV off-gas zeolite bed is geometrically favorable.	[ ]PROP/ECI diameter shell	ASME BPVC Section VIII (ASME, 2010)
Blower	The blower circulates sweep gas through the TSV headspace and through the hydrogen recombiner to control the hydrogen concentration in the primary system boundary. The TSV off-gas blower is geometrically favorable.	[ ]PROP/ECI diameter housing	N/A
Recombiner	The recombiner catalyzes the recombination of radiolytic hydrogen and oxygen in the TOGS sweep gas. The recombiner consists of three subcomponents: the recombiner element, the recombiner housing, and the recombiner heater. The recombiner heater provides heating to ensure proper recombination at low hydrogen concentrations and to ensure the recombiner remains dry. The TSV off-gas recombiner is geometrically favorable.	[ ]PROP/ECI diameter shell	ASME BPVC Section VIII (ASME, 2010)

Table 4a2.8-1 – TSV Off-Gas System Major Components
(Sheet 3 of 3)

Component	Description	Major Dimensions	Principal Design Code/Standard
Recombiner condenser	The recombiner condenser is a shell and tube heat exchanger. The recombiner condenser cools the TOGS sweep gas leaving the recombiner and condenses the water vapor generated by the recombination process in order to reduce the temperature of the sweep gas entering the TSV and TSV dump tank to below the pool water temperature. The TSV off-gas recombiner condenser is geometrically favorable.	[ ]PROP/ECI diameter shell	ASME BPVC Section VIII (ASME, 2010)
Recombiner demister	The recombiner demister removes entrained droplets from the TOGS sweep gas leaving the recombiner condenser and returns the liquid to the TSV. This process is necessary to prevent accumulation of water in the TSV dump tank, which would increase uranium concentration in the target solution in the TSV during irradiation and thereby increase reactivity in the subcritical assembly. Only the TOGS train B is equipped with a recombiner demister because it is the only one that connects to the TSV dump tank. The TSV off-gas recombiner demister is geometrically favorable.	[ ]PROP/ECI diameter shell	ASME BPVC Section VIII (ASME, 2010)
Vacuum tank	The vacuum tank is a vacuum reservoir that receives gas from the TOGS sweep gas loop to regulate pressure within the primary system boundary. The vacuum tank is re-evacuated as needed by the vacuum transfer system (VTS) to maintain pressure regulation capability. The vacuum tank is shared with both TOGS trains per irradiation unit. The TSV off-gas vacuum tank is geometrically favorable.	[ ]PROP/ECI diameter shell	ASME BPVC Section VIII (ASME, 2010)
Primary system boundary piping	The TOGS piping forming a portion of the primary system boundary is stainless steel pipe that interconnects the TOGS major components. The TOGS primary system boundary piping is geometrically favorable.	Up to NPS [ ]PROP/ECI	ASME B31.3 (ASME, 2013)

Table 4a2.8-2 – TSV Off-Gas System Interfaces
(Sheet 1 of 2)

System	Interface Description
Radioisotope process facility cooling system (RPCS)	RPCS provides chilled water at a nominal temperature of approximately 42°F (5.5°C) with a maximum of approximately 44°F (6.7°C) for the TSV off-gas condenser demister and target solution vessel (TSV) off-gas recombiner condenser. RPCS is periodically sampled for the presence of radiological material for the detection of primary system boundary leaks to the chilled water.
Subcritical assembly system (SCAS)	SCAS interfaces at the TSV off-gas system (TOGS) sweep gas supply and return piping, condensate return piping, and dump tank sweep gas supply piping. Fission product, radiolytic, and sweep gases are drawn into the TOGS circulation loop from the TSV. The SCAS also provides structural support to the TSV off-gas condenser demister units and TSV off-gas recombiner demister.
Normal electrical power supply system (NPSS)	The NPSS provides power to TOGS components and instrumentation.
Uninterruptible electrical power supply system (UPSS)	The UPSS provides power to the TSV off-gas blowers, TSV off-gas recombiner heaters, and TOGS safety-related instrumentation to ensure operation in the event of power loss.
TSV reactivity protection system (TRPS)	The TOGS provides safety-related instrumentation signals to TRPS. The TRPS initiates an IU Cell Safety Actuation and an IU Cell Nitrogen Purge if instrumentation signals from TOGS exceed predetermined limits. Instrumentation inputs to TRPS from TOGS are described in Subsection 4a2.8.6. IU Cell Safety Actuation and IU Cell Nitrogen Purge are described in Subsection 7.4.3.1. The TRPS provides outputs used to notify control room operators of abnormal conditions in TOGS.
Process integrated control system (PICS)	The PICS provides control signals to TOGS. PICS receives instrumentation signals and valve position indication from TOGS.
Irradiation cell biological shield (ICBS)	The ICBS provides shielding from TOGS components in the TOGS shielded cell and irradiation unit (IU) cell sufficient to reduce total dose rates to less than the requirements discussed in Chapter 11.
Light water pool system (LWPS)	The light water pool liner provides penetrations for the TOGS process piping. The light water pool liner also provides structural mounting for the TOGS piping and vacuum tank.
Vacuum transfer system (VTS)	The VTS provides a source of vacuum to evacuate the TOGS vacuum tank.

Table 4a2.8-2 – TSV Off-Gas System Interfaces
(Sheet 2 of 2)

System	Interface Description
Facility nitrogen handling system (FNHS)	The FNHS supplies TOGS with compressed nitrogen to allow pressure regulation in TOGS.
Facility chemical reagent system (FCRS)	The FCRS supplies TOGS with oxygen gas to ensure hydrogen recombination capability.
Process vessel vent system (PVVS)	The PVVS accepts TOGS pressure relief gases. The PVVS also accepts sweep gas from TOGS during nitrogen purge system (N2PS) operation.

Figure 4a2.8-1 – Subcritical Assembly System and TSV Off-Gas System Flow Diagram

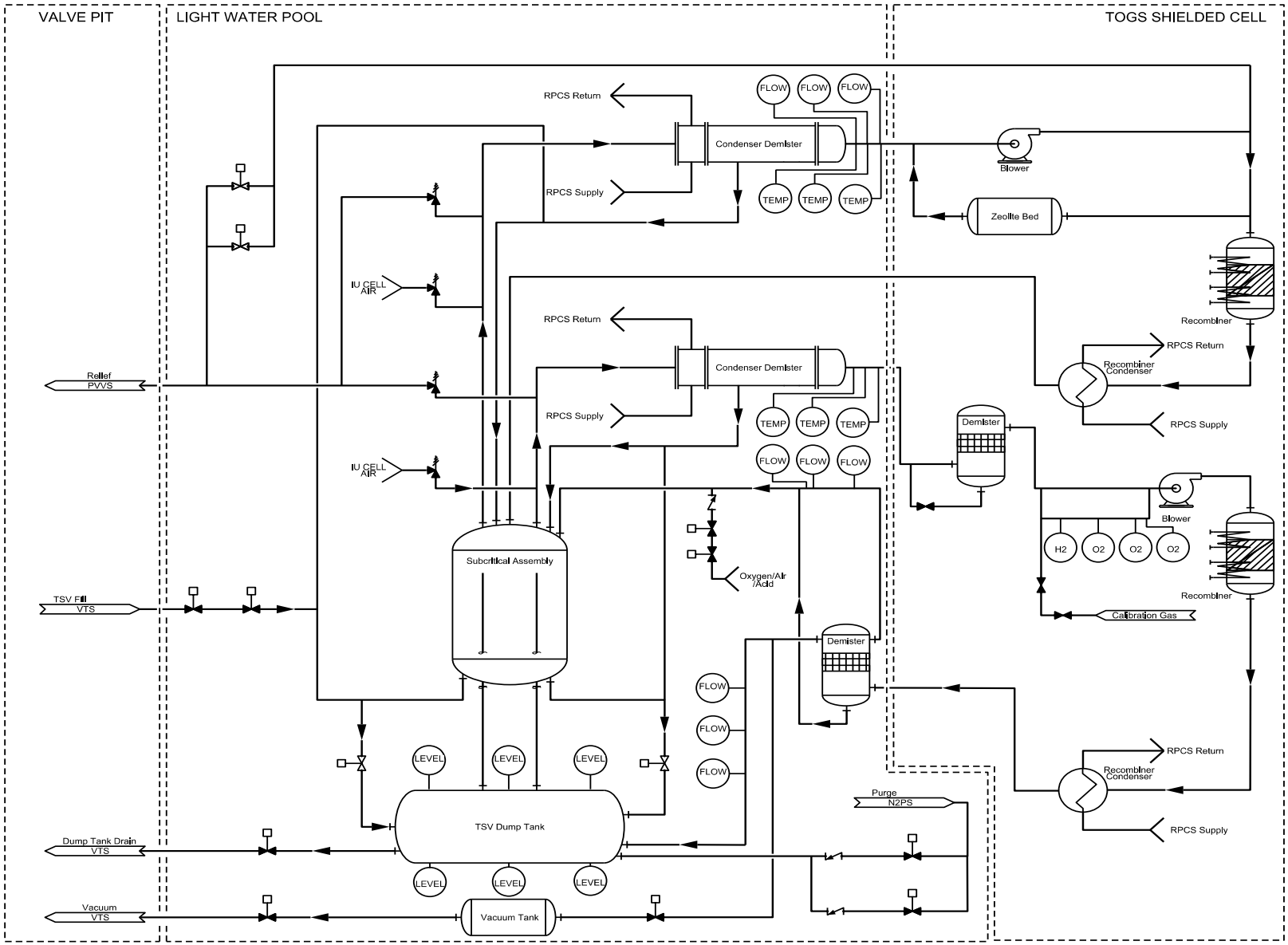

4a2.9 REFERENCES

ACI, 2006. Seismic Design of Liquid-Containing Concrete Structures and Commentary, ACI 350.3-06, American Concrete Institute, 2006.

ACI, 2007. Code Requirements for Nuclear Safety-Related Concrete Structures and Commentary, ACI 349-06, American Concrete Institute, 2007.

ACI, 2008. Building Code Requirements for Structural Concrete and Commentary, ACI 318-08, American Concrete Institute, 2008.

ACI, 2014. Code Requirements for Nuclear Safety-Related Concrete Structures and Commentary, ACI 349-13, American Concrete Institute, 2014.

ANSI/ANS, 2006. Nuclear Analysis and Design of Concrete Radiation Shielding for Nuclear Power Plants, ANSI/ANS-6.4-2006, American National Standards Institute, 2006.

ANSI/ANS, 2015. Program for Testing Radiation Shields in Light Water Reactors (LWR), ANSI/ANS-6.3.1-1987 (R2015), American National Standards Institute, 2015.

ASME, 2010. Boiler & Pressure Vessel Code - Rules for Construction of Pressure Vessels, Section VIII, American Society of Mechanical Engineers, July 1, 2010.

ASME, 2013. Code for Pressure Piping, B31.3-2012, American Society of Mechanical Engineers, January 10, 2013.

Baker, 1944. Water Boiler, LA Report 134, Los Alamos National Laboratory, Baker, C., et al., September 4, 1944.

Barbry Francis, 2007. French CEA Experience on Homogeneous Aqueous Solution Nuclear Reactors, Commissariat a l' Energie Atomique CEA/France, June 2007.

Beall, 1954. The Homogeneous Reactor Experiment – A Chemical Engineering Pilot Plant, Chemical Engineering Progress, Vol. 50, No. 5, Beall, S., et al., May 1954.

BNL, 2010. Aqueous Homogenous Reactor Technical Panel Report, BNL-94462-2010, Brookhaven National Laboratory, December 10, 2010.

Bull, 2014. Effects of Gas Bubble Production on Heat Transfer from a Volumetrically Heated Liquid Pool, University of Wisconsin-Madison, Bull, G., 2014.

Clayton, 1985. Neutron Source Multiplication Method, Pacific Northwest National Laboratory, Proceedings of the Workshop on Subcritical Reactivity Measurements, Clayton, E.D., 1985.

Gamble, 1959. A Proposed Model of Bubble Growth during Fast Transients in the KEWB Reactor, Paper 25-3, American Nuclear Society, Gamble, D., June 15, 1959.

IAEA, 2008. Homogeneous Aqueous Solution Nuclear Reactors for the Production of Mo-99 and Other Short Lived Radioisotopes, TECDOC-1601, International Atomic Energy Agency, September 2008.

Kangilaski, 1967. The Effects of Neutron Radiation on Structural Materials, Radiation Effects Information Center, Battelle Memorial Institute, REIC Report No. 45, Kangilaski, M., June 30, 1967.

Kangilaski, 1971. Radiation Effects Design Handbook: Section 7. Structural Alloys, National Aeronautics and Space Administration, NASA CR-1873, Kangilaski, M., October 1971.

Lane, 1958. Fluid Fuel Reactors, Part 1, Aqueous Homogeneous Reactors, Oak Ridge National Laboratory, Lane, J., June 1958.

LANL, 2011. Monte-Carlo N-Particle Transport Code MCNP5-1.60 Release & Verification, LA-UR-11-00230, Los Alamos National Laboratory, F.B. Brown, B.C. Kiedrowski, J.S. Bull, M.A. Gonzales, N.A. Gibson, 2011.

LANL, 2013a. A Generic System Model for a Fissile Solution Fueled Assembly, LA-UR-13-22033, Los Alamos National Laboratory, Kimpland, R., Klein, S., 2013.

LANL, 2013b. A Generic System Model for a Fissile Solution Fueled Assembly – Part II, LA-UR-13-28572, Los Alamos National Laboratory, Kimpland, R., Klein, S., November 2013.

LANL, 2014a. Aqueous Homogeneous Reactor (AHR) Benchmarks, LA-UR-14-21529, Los Alamos National Laboratory, Kimpland, R., Klein, S., March 2014.

LANL, 2014b. Discussion Regarding Aqueous Homogeneous Reactor (AHR) Benchmarks, LA-UR-14-23768, Los Alamos National Laboratory, Kimpland, R., Klein, S., May 2014.

Lee, 1952. The Density of Uranyl Sulfate Solutions and the Determination of Uranium Concentration by Density Measurements, ORNL-1332, Oak Ridge National Laboratory, Lee, J., et al., June 18, 1952.

NCSU, 1955. Raleigh Research Reactor Critical on September 1953, NCSCR-1, North Carolina State University, June 1955.

NEA, 2014a. International Handbook of Evaluated Reactor Physics Benchmark Experiments, Nuclear Energy Agency, NEA/NSC/DOC(2006)1, March 2014.

NEA, 2014b. International Handbook of Evaluated Criticality Safety Benchmark Experiments, Nuclear Energy Agency, NEA/NSC/DOC(95)03, September 2014.

NRC, 1979. Hydrodynamics and Heat Transfer Characteristics of Liquid Pools with Bubble Agitation, NUREG/CR-0944, United States Nuclear Regulatory Commission, Blottner, F., November 1979.

NRC, 2001a. Safety-Related Concrete Structures for Nuclear Power Plants (Other Than Reactor Vessels and Containments), Regulatory Guide 1.142, Revision 2, United States Nuclear Regulatory Commission, November 2001.

NRC, 2001b. Guide for Validation of Nuclear Criticality Safety Calculational Methodology, NUCREG/CR-6698, United States Nuclear Regulatory Commission, Dean, J., Tayloe, R., January 2001.

NRC, 2009. Concrete Radiation Shields and Generic Shield Testing for Nuclear Power Plants, Regulatory Guide 1.69, United States Nuclear Regulatory Commission, May 2009.

NRC, 2013. A Review of the Effects of Radiation on Microstructure and Properties of Concretes Used in Nuclear Power Plants, NUREG/CR-7171, United States Nuclear Regulatory Commission, November 2013.

ORNL, 1952. Physical Properties of Uranyl Sulfate at Atmospheric Pressure, CF52-3-253, Oak Ridge National Laboratory, March 10, 1952.

Parkins, 1958. Aqueous Homogeneous Type Research Reactors, Second International Conference on Peaceful Uses of Atomic Energy, Parkins, W., March 19, 1958.

Secoy, 1948. The System Uranyl Sulfate – Water, II. Temperature – Concentration Relationships above 250°C, ORNL-98, Oak Ridge National Laboratory, Secoy, C., July 7, 1948.

Secoy, 1955. Survey of Homogeneous Reactor Chemical Problems, Nuclear Engineering and Science Congress, American Chemical Society, Secoy, C., December 1955.

Silverman, 1961. Homogeneous Nuclear Reactor Fuel Composition, Patent No. 2,978,399, Silverman, Louis, et al., April 4, 1961.

Wilson, 1958. Aqueous Homogeneous Type Research Reactors, P/1543, Atomics International, Wilson, R., et al., June 1958.

4b RADIOISOTOPE PRODUCTION FACILITY DESCRIPTION

Chapter 4b describes the structures, systems, and components associated with the radioisotope production facility (RPF). These descriptions are associated with systems that are not covered in Chapter 4a2, which covers the irradiation facility (IF).

4b.1 FACILITY AND PROCESS DESCRIPTION

4b.1.1 INTRODUCTION

This chapter describes the design of the radioisotope production facility (RPF) and the processes employed within it. The primary function of the facility is to extract, purify, package, and ship medical isotopes.

4b.1.2 FACILITY DESCRIPTION

The facility design includes a number of intrinsic safety features that represent good engineering practice for nuclear production facilities.

- Radioactive material processing areas and related structures, systems, and components (SSCs) are located in Category I structures designed to survive design basis earthquake loadings and other external events. Additionally, SSCs co-located with safety-related SSCs are reviewed and supported in accordance with seismic II over I criteria. This avoids any unacceptable interactions between SSCs that could degrade the confinement of radioactive or chemically hazardous materials and result in an unacceptable release.
- Radioactive materials are contained within hermetically-sealed piping and processing systems to the extent practical. These systems are located within enclosures, hot cells, trenches, and vaults to provide shielding and confinement as necessary to protect workers, the public, and the environment.
- Ventilation pressures are cascaded from lowest pressures in the highest expected contamination areas to higher pressures in occupied zones.
- Radioactive material transfers between hot cells and vaults are minimized to the extent possible.
- Tanks, piping, and equipment that contain fissile material are designed to be favorable geometry to the extent practical.
- Piping systems for radioactive liquid transfers between processing areas are contained within shielded pipe trenches or pipe sleeves.
- Hot cells, tank vaults, valve pits, and pipe trenches housing equipment containing significant concentrations of fissile material drain to the radioactive drain system (RDS) which includes leak detection to alert operators to a breach of the process system boundary.
- Tanks containing significant concentrations of fissile material include overflow lines that are hard-piped to the RDS tanks in the low point of the building.
- Operating areas are monitored with the continuous air monitoring system (CAMS), radiation area monitoring system (RAMS), and a criticality accident alarm system (CAAS).
- Hot cells are isolated upon detection of a leak exceeding pre-determined criteria, to prevent the spread of contamination.
- Radioactive materials are excluded from normally occupied areas, except for transfers within suitably shielded containers.

4b.1.3 PROCESS DESCRIPTION

The RPF has been divided into a number of systems that represent discrete areas for isotope production. The systems associated with isotope production include:

- Target solution preparation system (TSPS)
- Molybdenum (Mo) extraction and purification system (MEPS)
- Iodine and xenon purification and packaging (IXP)
- Target solution staging system (TSSS)
- Uranium receipt and storage system (URSS)
- Process vessel vent system (PVVS)
- Radioactive liquid waste storage (RLWS)
- Radioactive liquid waste immobilization (RLWI)
- Vacuum transfer system (VTS)
- Mo isotope product packaging system (MIPS)

A description of the operational and safety functions of each system is included in the section for each system. Summary descriptions are provided in this section for PVVS, RLWI, RLWS, VTS, and MIPS and additional descriptions are contained in Chapter 9b. TSPS and URSS are described in this section, as well as in Section 4b.4 as they relate to processing of unirradiated special nuclear material (SNM).

The bounding radionuclide inventory for one target solution batch entering the RPF is given in Chapter 11. The SNM inventory is less than 3000 kilograms (kg) for the entire facility.

The processing systems are located within the radiologically controlled area (RCA). The RCA design includes a ventilation system with active monitoring equipment and audible and visual alarms (see Subsection 6b.3.3, Section 7.7, and Section 9a2.1). The RCA and radiation protection controls are described in Section 11.1.

The facility uses SNM within processing systems. The chemical forms and maximum quantities of SNM in each system are included in the subsequent process descriptions. Details of SNM controls are included in Subsection 4b.4.1 and Subsection 4b.4.2.

The provisions for criticality safety control, including adherence to the double contingency principle, are detailed in Section 6b.3. References for criticality safety descriptions for specific systems are provided in the subsequent process descriptions.

4b.1.3.1 Target Solution Preparation System (TSPS)

4b.1.3.1.1 Process Functions

- Prepare target solution (uranyl sulfate) by reacting uranium oxide and sulfuric acid in the uranyl sulfate dissolution tanks.
- Condense water vapor generated during the dissolution process and return the condensate to the dissolution tank.
- Capture entrained liquid droplets in the dissolution tank headspace vent and return the liquid to the dissolution tank.
- Remove solids that may be present in solution during transfer of solution from the uranyl sulfate dissolution tanks to the target solution preparation tank.

- Allow blending of batches of uranyl sulfate from the uranyl sulfate dissolution tanks in the target solution preparation tank.
- Allow representative samples of the dissolution tank and preparation tank contents to be collected.
- Transfer target solution into a selected target solution hold tank.
- Provide uranyl sulfate, sulfuric acid, catalyst, or water for adjustment of target solution batches.

4b.1.3.1.2 Safety Functions

- Prevent inadvertent criticality through design of equipment in accordance with the criticality safety evaluation (see Section 6b.3).
- Prevent intake of uranium chemical forms that would exceed allowable limits through confinement of uranium during the uranium oxide loading, dissolution, and transfer processes.

4b.1.3.1.3 Process Description

The TSPS is used to prepare low enriched uranium (LEU) uranyl sulfate (UO_2SO_4) solution. Solid uranium oxide is first converted to uranyl peroxide ($UO_2O_2 \cdot nH_2O$), which is then dissolved in sulfuric acid (H_2SO_4) and adjusted to the final desired pH. Excess peroxide present is decomposed with heat. Uranium oxide is obtained from the URSS.

Once the dissolution procedure is complete, the solution is pumped from the dissolution tank through a filter to remove undissolved solids and to the target solution preparation tank. Volumes of target solution prepared in the uranyl sulfate dissolution tanks are smaller than the nominal volume of a full target solution batch. As such, solution from the dissolution tanks is combined in the target solution preparation tank to produce a full batch of target solution. The uranium concentration of the prepared uranyl sulfate is [ ]PROP/ECI and the pH is [ ]PROP/ECI. Concentrations greater than the irradiation operating limit are used to adjust the uranium concentration for batches between cycles.

From the target solution preparation tank, the target solution is transferred to one of the target solution hold tanks. There is one target solution hold tank per target solution vessel (TSV). The target solution hold tanks are part of the TSSS system.

The SNM within the TSPS system is LEU. This is present in the form of uranium oxide, uranyl peroxide, or uranyl sulfate depending on its location within the process. The maximum inventory of LEU in the system is 200 kg divided between the TSPS glovebox, process vessels, and piping components. The U-235 present in the facility is derived from LEU, which is less than 20 percent enriched. The nominal enrichment is 19.75 percent.

A description of provisions for criticality safety control in the TSPS is contained in Subsection 6b.3.2.4.

The chemical hazards present from licensed materials in the TSPS room include uranium oxide powder and uranium metal (although uranium metal is not used in the TSPS process) (see Subsection 4b.4.2.1). Chemical compounds produced in TSPS from licensed materials include uranyl peroxide (an intermediate compound) and uranyl sulfate. The uranium compounds can

present a health (toxicity) risk through inhalation or other ingestion pathways. Exposure to uranium oxide and uranium metal is controlled through storage in sealed containers, seismically-qualified storage racks, and confinement in the TSPS glovebox while being transferred from open containers. Airborne droplets that may emanate from the solution are controlled by sweep gas routed through a reflux condenser and exhausted to radiological ventilation zone 1 (RVZ1).

Other hazardous chemicals present in the TSPS room include sulfuric acid, hydrogen peroxide, and [ ]PROP/ECI. These reagents are used in the target solution preparation and are not produced from licensed materials.

A detailed description of the TSPS is provided in Section 4b.4.

4b.1.3.2 Molybdenum Extraction and Purification System

4b.1.3.2.1 Process Functions

- Separate Mo from irradiated uranyl sulfate solution (target solution).
- Increase target solution temperature to promote adsorption of the Mo from the target solution.
- Cool target solution prior to return to the target solution hold tank.
- Concentrate the product solution volume such that it may be processed by the purification subsystem.
- Reduce the acid and base vapor load of the gases going to the process vessel ventilation system.
- Purify the molybdenum-99 (Mo-99) product to within the limits described in the customer supply agreements.

4b.1.3.2.2 Safety Functions

- Prevent inadvertent criticality through design of equipment in accordance with the criticality safety evaluation.
- Ensure confinement boundaries are maintained during normal conditions and during and following design basis events to ensure dose consequences during accidents are within acceptance criteria.
- Ensure the process system boundary integrity is maintained during normal conditions and during and following design basis events to prevent uncontrolled release of radioactivity.

4b.1.3.2.3 Process Description

The MEPS extracts the Mo from the irradiated uranyl sulfate. The Mo is concentrated and purified to the final Mo product form and is sampled for product specification compliance prior to transfer to the MIPS.

MEPS operations are performed in two distinct phases:

1. Mo extraction
2. Mo purification

Each of these operations takes place in separate, segregated shielded hot cells, which together form part of the supercell. Supercell shielding is described in Section 4b.2 and supercell confinement is described in Section 6b.2.

4b.1.3.2.3.1 Molybdenum Extraction

The Mo extraction is a batch process. It is performed in a number of steps.

1. Irradiated uranyl sulfate is heated to below the boiling point and passed through an adsorption column packed with [ ]PROP/ECI. The [ ]PROP/ECI column adsorbs the majority of the Mo-99 along with fractions of other fission products and impurities in solution, such as transuranics, as discussed in detail in Subsection 4b.3.1. The uranium concentration and pH of the target solution are negligibly affected by the extraction process.
2. The target solution, less the extracted fission products and impurities, is then cooled and directed to either the TSSS, the IXP cell, or the RLWS.
3. The extraction column is washed with H_2SO_4 solution to remove the residual uranyl sulfate solution.
4. The extraction column is washed with water to neutralize the column.
5. The Mo is eluted using sodium hydroxide (NaOH) solution into an eluate hold tank.

Following the removal of the Mo from the uranium-bearing target solution, the Mo eluate is processed [

].PROP/ECI The Mo solution is concentrated through evaporation to ensure the solution is the correct volume for purification. The expected level of impurities in a target solution batch, from fission products and transuranics, is described in Section 4a2.2 and Section 1.1.

The Mo extraction [ ]PROP/ECI are replaced if required for product purity or product yield. Spent columns are disposed of as solid waste.

The SNM present in the MEPS is target solution in the piping and extraction column and other equipment. The MEPS does not contain the entire target solution batch as it is transferred through MEPS equipment. The maximum amount of SNM in MEPS process equipment at one time is [ ]PROP/ECI. A description of provisions for criticality control in the MEPS is contained in Subsection 6b.3.2.3. A detailed description of the Mo extraction is provided in Subsection 4b.3.1.

4b.1.3.2.3.2 Molybdenum Purification

The purification process is a series of steps which purifies the Mo-99 solution produced by the Mo extraction process. This process removes impurities through small-scale additions of reagents, precipitation, filtration, and evaporation. The total additions and wastes to and from the purification process are expected to be less than 68 fluid ounces (fl. oz.) (2 liters [L]) for a typical Mo batch, excluding the glassware. The purification process is performed using laboratory glassware. Spent glassware is disposed of as solid radioactive waste. Only trace amounts of SNM (transuranic impurities contained in the Mo solution) are present in the Mo purification process. A detailed description of the purification process is provided in Subsection 4b.3.1.

4b.1.3.3 Iodine and Xenon Purification and Packaging

4b.1.3.3.1 Process Functions

The process functions of IXP include:

- Separate iodine from an acidic solution, either target solution [ ]PROP/ECI.
- Purify the iodine-131 product to within the limits required by customers.
- Purify the xenon-133 product to within the limits required by customers.

4b.1.3.3.2 Safety Functions

- Prevent inadvertent criticality through design of equipment in accordance with the criticality safety evaluation.
- Ensure confinement boundaries are maintained during normal conditions and during and following design basis events to ensure dose consequences during accidents are within acceptance criteria.
- Ensure the process system boundary integrity is maintained during normal conditions and during and following design basis events to prevent uncontrolled release of radioactivity.

4b.1.3.3.3 Process Description

The IXP separates the iodine from an acidic solution following target solution irradiation. The IXP is capable of processing target solution, [ ]PROP/ECI.

For extraction from target solution, the solution is directed from the extraction hot cell to the IXP hot cell following Mo extraction. [

]PROP/ECI

In the IXP cell, solution is pumped through the first adsorption column to separate iodine from the bulk solution. Column effluent is directed towards the TSSS or to the RLWS. The iodine is eluted from the first column and drained to a holding tank. [

]PROP/ECI The resulting product is an iodine-131, sodium hydroxide solution. The product is bottled and transferred to the MIPS.

[

]PROP/ECI The cryotrap is reheated to desorb the xenon and allow it to be packaged. Xenon is packaged in small gas bottles, and then transferred to the MIPS.

The SNM present in IXP is target solution in the piping and first adsorption column. The IXP does not contain an entire target solution batch as it is transferred through IXP equipment. The

maximum amount of SNM in IXP process equipment at one time is [ ]PROP/ECI. A description of provisions for criticality control in the IXP is contained in Subsection 6b.3.2.12. A detailed description of the IXP system is provided in Subsection 4b.3.1.

4b.1.3.4 Target Solution Staging System

4b.1.3.4.1 Process Functions

- The TSSS provides capacity to store target solution awaiting irradiation and after processing to remove radioisotopes.
- The TSSS provides capacity to store target solution requiring adjustment, analysis, or disposal.
- The TSSS allows a representative sample of the contents of each target solution hold tank and target solution storage tank to be obtained.

4b.1.3.4.2 Safety Functions

- Prevent inadvertent criticality through design of equipment in accordance with the criticality safety evaluation.
- Ensure the process system boundary integrity is maintained during normal conditions and during and following design basis events to prevent uncontrolled release of radioactivity.

4b.1.3.4.3 Process Description

The TSSS is a set of tanks used to provide staging and storage of target solution in the RPF. The target solution hold tanks stage target solution that is to be irradiated. Target solution awaiting irradiation may be freshly prepared and supplied from the TSPS or previously irradiated target solution that is returned to the target solution hold tank after being processed through the MEPS or IXP. Target solution is transferred from the target solution hold tank to the TSV by use of the VTS. One target solution hold tank is dedicated to each IU cell, totaling eight hold tanks.

Adjustments to solution in the hold tanks for uranium concentration or other solution properties are made by reagent addition using the TSPS, MEPS, or IXP. Air sparging is provided for mixing the target solution hold tanks.

The target solution storage tanks provide storage for target solution batches that may be out of specification, are awaiting disposal in the RLWS, or otherwise require storage. Two target solution storage tanks are provided in the RPF. Adjustments to solution properties can be made by reagent addition using MEPS or IXP. Air sparging is also provided for mixing the target solution storage tanks.

The SNM present in TSSS is target solution in the piping and vessels. The TSSS process equipment can contain up to 10 target solution batches. The maximum amount of SNM in process at one time is [ ]PROP/ECI. The equipment and piping in the TSSS that potentially contain uranium meet the criticality safety requirements of the criticality safety evaluation, which includes geometry, volume, and physicochemical controls. A description of provisions for criticality control in the TSSS is contained in Subsection 6b.3.2.1. A detailed description of the TSSS system is provided in Subsection 4b.4.1.

4b.1.3.5 Uranium Receipt and Storage System

4b.1.3.5.1 Process Functions

- Provide receipt and repackaging of uranium (metal or oxide) received from a supplier
- Convert uranium metal to uranium oxide
- Provide storage for uranium oxide prior to use in the TSPS
- Provide storage for uranium metal
- Provide for sampling to measure uranium enrichment

4b.1.3.5.2 Safety Functions

- Prevent inadvertent criticality through design of equipment in accordance with the criticality safety evaluation.
- Prevent exposure to uranium that would exceed allowable uptake limits through confinement of uranium during the uranium receipt, repackaging, conversion, and storage processes.

4b.1.3.5.3 Process Description

The URSS processes include receipt, repackaging, storage, and conversion of uranium received from a supplier. Upon receipt of a uranium shipment, inner containers from the supplier shipping container are imported to the URSS glovebox and repackaged. If the material received is uranium metal, it is converted to uranium oxide using a furnace. If the material received is uranium oxide, further processing is not required. The uranium oxide is then weighed and repackaged into storage canisters. Once transfer to storage canisters is complete, the canisters are removed from the URSS glovebox and stored in the uranium oxide storage rack.

The SNM within the URSS system is LEU. This is present in the form of uranium oxide and uranium metal. The maximum inventory of LEU in the system is 770 kg. This is divided between the URSS glovebox, supplier shipping containers, furnace, SHINE storage containers, and the storage rack. A description of provisions for criticality control in the URSS is contained in Subsection 6b.3.2.7.

The chemical hazards present from licensed materials in the URSS room include uranium oxide powder and uranium metal. The uranium can present a health (toxicity) risk through inhalation or other ingestion pathways. Exposure to uranium oxide and uranium metal is controlled through storage in sealed containers, seismically-qualified storage racks, and confinement in the URSS glovebox. A detailed description of the URSS is provided in Section 4b.4.

4b.1.3.6 Process Vessel Vent System

4b.1.3.6.1 Process and Safety Functions

Section 9b.6 describes the process and safety functions for the PVVS.

4b.1.3.6.2 Process Description

The PVVS ventilates and treats off-gas from RPF vessels that handle the radioactive material where there is a potential for radiolytic hydrogen to accumulate. The off-gas may contain

gaseous fission products (e.g., iodine, xenon, and krypton). Other systems discharge gases to the PVVS as needed as part of other facility processes (e.g., vacuum transfer, vessel filling). PVVS interfaces with the following systems:

- TSSS
- MEPS
- IXP
- RLWI
- RLWS
- VTS
- RDS
- TSV off-gas system (TOGS)

Contaminants in the PVVS system include:

- Acid gases
- Caustic gases
- Iodine
- Noble gases

Blowers at the discharge of the system develop a slight vacuum to pull air across the headspace of each tank served. The flow rates across each tank dilute radiolytic hydrogen below the lower flammability limit (LFL).

The off-gas is conditioned to reduce acid contaminant concentrations, reduce relative humidity, and to regulate temperature. The gas flows through adsorption beds to adsorb iodine and delay the release of krypton and xenon to the facility stack to allow these isotopes to decay.

There is no significant quantity of SNM within the PVVS system. A general description of provisions for criticality control in the PVVS is contained in Subsection 6b.3.2.6. A detailed description of the PVVS is provided in Section 9b.6.

4b.1.3.7 Radioactive Liquid Waste Storage

4b.1.3.7.1 Process and Safety Functions

Section 9b.7 describes the process and safety functions for the RLWS.

4b.1.3.7.2 Process Description

The RLWS system collects, stores, blends, conditions, and stages liquid wastes upstream of the RLWI system for solidification. The RLWS is a set of below-grade tanks used to provide storage for radioactive liquid wastes prior to immobilization. Liquid wastes from processes that may contain greater than trace amounts of uranium, including spent target solution, are segregated in favorable geometry tanks until the solutions are verified to have a uranium concentration below the single-parameter administrative limit as described in Section 6b.3. Liquid wastes from other processes are collected separately. Liquid wastes are blended prior to immobilization.

Liquid wastes collected and stored by RLWS include the following:

- MEPS liquid wastes
- IXP liquid wastes
- PVVS condensate
- Spent target solution
- Flush solution

The SNM within the RLWS system is from process wastes where target solution was present and from spent target solution. This is present in the form of uranyl sulfate. The maximum inventory of LEU in the system is 1200 kg divided between the RLWS process vessels and piping. A general description of provisions for criticality control in the RLWS is contained in Subsection 6b.3.2.2. A detailed description of the RLWS is provided in Section 9b.7.

4b.1.3.8 Radioactive Liquid Waste Immobilization

4b.1.3.8.1 Process and Safety Functions

Section 9b.7 describes the process and safety functions for the RLWI system.

4b.1.3.8.2 Process Description

The RLWI system immobilizes the facility generated radioactive liquid wastes for ultimate disposal. The waste solutions are solidified with an immobilization agent to comply with the relevant storage, shipping, and disposal requirements.

Liquid waste is transferred to the RLWI system from RLWS using the VTS. Wastes may be recirculated in the RLWI system through a set of adsorption columns to remove isotopes that impact dose and classification of the waste package. These isotopes may include strontium, cesium, and cerium/praseodymium. Solution in the RLWI system is pumped into a waste drum pre-filled with solidification agents, and the drum is mixed and allowed to cure. The solidified waste drum is transported from the RPF to the material staging building.

The SNM within the RLWI system is from process wastes where target solution was present and from spent target solution. The maximum inventory of SNM in the system is 10 kg within the RLWI process vessels and piping. A general description of provisions for criticality control in the RLWI is contained in Subsection 6b.3.2.9. A more detailed description of the RLWI system is provided in Section 9b.7.

4b.1.3.9 Vacuum Transfer System

4b.1.3.9.1 Process and Safety Functions

Section 9b.2 describes the process and safety functions for the VTS.

4b.1.3.9.2 Process Description

The VTS provides target solution and liquid waste transfer throughout the RPF using vacuum operated lifts. Equipment in VTS includes vacuum lift tanks, a knockout pot, and vacuum pumps.

The VTS is one of the methods used to transfer liquids throughout the RPF. Liquid is moved in batches using tanks that have a favorable geometry for criticality safety. These tanks are collectively named lift tanks. Vacuum is applied to the destination lift tank causing liquid to flow from the source tank to the lift tank. When filled to a specified height, vacuum is broken and the tank is vented to atmospheric pressure. Liquid is then transferred to its subsequent destination through gravity, a second lift, or pumping. A detailed description of the VTS is provided in Section 9b.2.

The SNM present in the VTS is target solution and waste streams being transferred by the system. This SNM is in the form of uranyl sulfate. The maximum inventory of LEU in the system is 60 kg. This is divided between the VTS lift tanks and piping.

The components in the VTS that potentially contain uranium meet the criticality safety requirements of the criticality safety evaluation, which include geometry, interaction, and volume controls. A general description of provisions for criticality control in the VTS is described in Subsection 6b.3.2.5.

4b.1.3.10 Molybdenum Isotope Product Packaging System

4b.1.3.10.1 Process and Safety Functions

Section 9b.7 describes the process and safety functions for the MIPS.

4b.1.3.10.2 Process Description

The MIPS receives concentrated Mo-99 product solution from the MEPS and Xe-133 and I-131 product containers from the IXP system. After Mo product is purified and sampled in the purification hot cell, the Mo product bottle is capped and transferred to the packaging hot cell. Labels are applied to the product bottle and the bottle is secured into the secondary container. The secondary container is labeled and then secured into the Mo shipping cask. The cask is leak tested prior to being shipped from the facility. The packaging operations for iodine and xenon products are the same as for the Mo.

There is no significant quantity of SNM within the MIPS system. Therefore, no criticality controls are required. A more detailed description of the MIPS is provided in Section 9b.7.

4b.2 RADIOISOTOPE PRODUCTION FACILITY BIOLOGICAL SHIELD

4b.2.1 INTRODUCTION

The production facility biological shield (PFBS) provides a barrier to protect SHINE facility personnel and members of the public by reducing radiation exposure to radiation sources within the radioisotope production facility (RPF). PFBS also provides radiation shielding to protect various components and equipment of the SHINE facility. The major areas in the RPF that target solution and other radiation sources containing byproduct material are:

- Supercell, including the following cells
  - Extraction (3)
  - Purification (3)
  - Packaging (2)
  - Process vessel vent system (PVVS)
  - Iodine and xenon purification and packaging (IXP)
- Process tank vaults
- Process valve pits
- Pipe trenches
- Carbon delay bed vault
- Solid waste drum storage bore holes
- Radioactive liquid waste immobilization (RLWI) shielded enclosure

A description of radiation source locations and source term characterizations can be found in Chapter 11.

Section 6b.2 describes the ventilation and confinement function of the PFBS (other than the RLWI enclosure), including normal and postulated accident conditions. Ventilation for the RLWI enclosure is provided by radiological ventilation zone 1 (RVZ1), as described in Section 9a2.1.

4b.2.2 BIOLOGICAL SHIELD DESIGN BASIS

4b.2.2.1 Materials

The design bases for the materials included in the biological shield design are:

- The dose reduction by the biological shielding supports compliance with the as low as is reasonably achievable (ALARA) objectives and dose limit required by 10 CFR 20, as described in Chapter 11.
- The dose reduction by the biological shielding supports radiation exposure mitigation during postulated accident conditions, as described in Chapter 13.
- The design and construction of the concrete portions of the biological shield conforms to Regulatory Guide 1.69, Concrete Radiation Shields and Generic Shield Testing for Nuclear Power Plants, Revision 1 (USNRC, 2009), with the exception that the PFBS conforms to ACI 349-13 (ACI, 2014), Code Requirements for Nuclear Safety-Related Concrete Structures and Commentary, instead of ACI 349-06 (ACI, 2007), as described in Section 4b.2.4.

4b.2.2.2 Geometry and Configuration

The general shape of the PFBS shielding elements is that of rectangular slabs comprising the walls and cover plugs.

The shield walls of the supercell shield are lead and vary in thickness from approximately 0.75 ft. (0.2 m) to 1.0 ft. (0.3 m). The walls of the RLWI shielded enclosure are concrete and vary in thickness from approximately 1.5 ft. (0.5 m) to 2.5 ft. (0.8 m). Below-grade PFBS enclosures include process tank vaults, pipe trenches, valve pits, waste drum storage bore holes, and the carbon delay bed vault. The concrete process tank and pipe trench cover plugs vary in thickness from approximately 4.5 ft. (1.4 m) to 5.5 ft. (1.7 m), the concrete carbon delay bed vault cover plug thickness is approximately 5.5 ft. (1.7 m), and the lead waste drum storage cover plug thickness is approximately 0.83 ft. (0.25 m). Alternative shielding materials and configurations that provide equivalent or increased shielding effectiveness may be used.

Biological shielding materials are described in Section 4b.2.3 and shield thicknesses support ALARA goals and compliance with 10 CFR 20 dose limits as described in Section 11.1. Local hot spots (e.g., penetrations, interfaces) will be measured as part of the shielding test program and will be managed appropriately according to the Radiation Protection Program (RPP), as described in Section 11.1.

Figure 4b.2-1 shows a section view through a representative auxiliary valve pit, pipe trench, and tank vault, providing a general depiction of the below-grade RPF biological shielding.

4b.2.2.2.1 Functional Design of Biological Shield

Process piping generally transitions between the RPF and IF biological shields (i.e., PFBS and irradiation cell biological shield [ICBS]) directly through below-grade piping penetrations. Auxiliary piping and unirradiated target solution piping enter the PFBS shielding through one of two auxiliary valve pits using fixed supplemental shielding and non-linear paths, as shown in Figure 4b.2-1. Shielding for the waste drum bore holes, shown in Figure 4b.2-2, utilizes a shielding gate, which interfaces with the drum transfer cart to limit streaming paths. Compensating shielding is used as needed to ensure sufficient shielding for the different gate positions. Process tank vault, pipe trench, and carbon delay bed cover plugs are not removed during routine operation, but can be removed for equipment replacement, maintenance, or inspection. Smaller access plugs are available within larger plugs for inspection purposes.

The RLWI shielded enclosure has functional design requirements for waste and equipment import and export. The liquid process wastes enter the RLWI shielded enclosure through the process piping trench, they are solidified in the cell, and the solidified waste drums exit through the RLWI drum access door. New drums enter the RLWI shielded enclosure through the same drum access door, and personnel can enter and leave the shielding via the personnel access door. Contaminated process equipment is removed via the drum access door or shield plugs. Figure 4b.2-3 shows a general depiction of the entry and exit facilities for the RLWI shielded enclosure.

The supercell has multiple functional design requirements for interfacing with the shielded area. Solid wastes exit through drum export features on the supercell. The supercell includes features to allow the import of consumables and process equipment and transfer between adjacent cells. The supercell has export features for product shipping containers. Penetrations through the hot

cell work surfaces to the import and export areas have plugs that are in-place when not actively importing or exporting materials. Plugs have the same shielding capability as the bulk material they penetrate. The penetrations are designed to minimize the potential spread of contamination in accordance with the RPP. The supercell consists of multiple individual hot cells. The hot cells are equipped with manipulators. Manipulator penetrations are designed with supplemental shielding to meet ALARA goals. The hot cells are equipped with lead glass windows. The window design incorporates compensating shielding to reduce streaming at the interface of the window and the hot cell wall. Figure 4b.2-4 shows a general depiction of the entry and exit facilities from the supercell.

The biological shield and supporting structures are designed and constructed to remain intact during normal operations as well as during and following design basis accidents.

No neutron fluxes exist in the RPF that could result in activation of groundwater or soils.

4b.2.3 SHIELD MATERIALS

The RPF uses the following primary materials in different configurations to assemble the biological shield and meet the radiation exposure goals defined in Chapter 11:

- standard density (minimum 140 pounds per cubic foot [lb/ft^3]) (2.2 grams per cubic centimeter [g/cm^3]) concrete with reinforcing steel,
- lead,
- steel, and
- lead glass.

The concrete is of the ordinary type, with no special additives for shielding purposes.

The biological shielding for the tank vaults, pipe trenches, carbon delay bed vault, waste drum storage (except upper portions), and portions of the RLWI shielded enclosure is reinforced concrete. Waste drum storage bore hole upper portions (i.e., covers and compensating shielding) are lead. Portions of the RLWI shielded enclosure include steel. The supercell shielding is primarily lead. Lead glass windows are used for viewing purposes. Lead is used for localized shielding around components with high activity. Alternative shielding materials and configurations that provide equivalent or increased shielding properties may be used.

4b.2.3.1 Shielding Calculations

Calculations are performed with the software package named MCNP (Monte Carlo N-Particle Transport Code). MCNP is developed and validated by Los Alamos National Laboratory (LANL) and distributed by the Radiation Safety Information Computational Center (RSICC) at Oak Ridge National Laboratory (ORNL) (LANL, 2011). MCNP uses a Monte Carlo based particle (neutrons and photons) transport method to generate a set of particle tracks through a model of the facility geometry. The Monte Carlo method generates a statistical set of results for individual particles transported through the geometry. Enough particles are simulated to obtain statistically significant results. Conservative assumptions are used to define the overall shielding properties of the concrete and reinforcing bar assuming no reinforcing bar is conservative for gamma shielding. Shielding coefficients are not used in the MCNP calculation methodology and, therefore, were not calculated. See Table 11.1-1 for source term assumptions.

4b.2.3.2 Radiation Damage

4b.2.3.2.1 Concrete

According to the ANSI/ANS 6.4-2006, Nuclear Analysis and Design of Concrete Radiation Shielding for Nuclear Power Plants, nuclear heating in concrete can be neglected if the incident energy fluxes are less than 1E+10 MeV/cm^2-sec or will operate at a temperature below 65°C (ANSI/ANS, 2006a). The cumulative effects of the gamma fluxes from the process equipment sources have been analyzed with MCNP software, and peak energy fluxes in the concrete were calculated to be less than 1E+10 MeV/cm^2-sec or the concrete temperature was calculated to be below 65°C; therefore, no nuclear heating concerns exist.

With regard to degradation, an integrated dose of gamma radiation up to 1E+10 rad has been shown to not have significant impacts to concrete structural properties (USNRC, 2013). Using MCNP, analysis of the maximum gamma doses to the concrete over the 30 year lifetime was 2E+09 rad. Given these results, concrete radiation degradation is not significant and does not indicate additional design considerations.

No neutron fluxes that could result in degradation or activation of concrete PFBS components are present in the RPF.

4b.2.3.2.2 Steel, Lead, and Lead Glass

No neutron fluxes that could result in degradation or activation of steel, lead, or lead glass in PFBS components are present in the RPF.

With regard to gamma radiation, no effect on steel or lead integrity occurs. Lead glass windows are designed to withstand the integrated dose expected over their lifetime.

4b.2.3.3 Radiation Streaming

The biological shield requires a number of penetrations, inserts, and other features where the bulk shielding materials are reduced in thickness, or where the materials used in the penetration are less dense than the surrounding bulk material. Each such penetration is designed with well-demonstrated techniques such as supplemental shielding, location in areas of low incident radiation, non-linear paths, and/or other methods to reduce streaming and leakage to ensure 10 CFR 20 limits are met. The largest penetrations through the biological shielding are to accommodate ventilation on the hot cell confinements. Non-linear paths and supplemental shielding are used in these areas.

Gaps between vault and trench cover plugs are explicitly modeled to account for the potential streaming caused by construction tolerances. Locations where shielding materials of different densities meet are also evaluated and compensating shielding is used as needed to support ALARA goals described in Section 11.1.

Penetration designs are done with MCNP, with appropriate variance reduction techniques to ensure statistically significant results are obtained.

4b.2.4 ANALYSIS

Analysis is performed to:

- Provide estimates for both neutron (when applicable) and gamma-ray dose rates at locations inside and outside the facility;
- Evaluate shield penetrations and voids, discontinuities in shield material, and material transport operations such as exports from hot cell confinements for potential radiation streaming; and
- Determine extent of radiation effect on shielding materials (i.e., heating and activation).

Results of dose calculations are presented in Section 11.1 and show that the form and materials of the shielding support ALARA goals and compliance with 10 CFR 20 dose limits.

4b.2.4.1 Methodology

4b.2.4.1.1 Concrete Radiation Shielding Minimum Thickness – Radiation Shielding Requirements

The minimum thickness of concrete radiation shields, based on radiation shielding requirements, is determined using the following approach:

a. Use ANSI/ANS 6.4-2006, Chapters 6, 7, and 8, as an overview of the historic calculation methodology for concrete radiation shields (ANSI/ANS, 2006a).
b. Use Monte Carlo techniques for radiation shielding calculations.
c. Use a qualified version of the software for radiation shielding calculations (i.e., MCNP5).
d. Use concrete composition input parameters corresponding to Type 04 ordinary concrete, as described in ANSI/ANS 6.4-2006 (ANSI/ANS, 2006a), which was determined acceptable for SHINE's concrete specifications.
e. Verify sufficient shielding around features with potential for radiation streaming.
f. Determine shielding thicknesses required to meet 10 CFR 20 and facility ALARA program.

4b.2.4.1.2 Concrete Radiation Shielding Minimum Thickness – Structural Requirements and Other Structural Dimensions and Reinforcement Requirements

The minimum thickness of concrete radiation shields, based on structural requirements, other structural dimensions, and reinforcement requirements, is determined in accordance with the provisions of ACI 349-13 (ACI, 2014) for applicable normal loads, severe and extreme environmental loads, and abnormal loads, as defined in Section 9.1 of ACI 349-13. See Subsection 3.4.2.6 for details on the structural analysis methodology.

4b.2.4.1.3 Concrete Radiation Shielding – Final Minimum Thickness

The final minimum thickness of the concrete biological shield structure for the RPF is based on the greater of the radiation shielding requirements and the structural requirements.

4b.2.4.1.4 Load and Strength Reduction Factors

Load and strength reduction factors for the structural design of concrete shield structures and related members shall be based on those prescribed in ACI 349-13, Sections 9.2 and 9.3, respectively (ACI, 2014).

4b.2.4.1.5 Design of Concrete for Shielding Structures

The design of the concrete for shielding structures, including materials selection, durability requirements, quality control, mixing, placement, formwork, embedded pipes, construction joints, reinforcement, analysis, and design, shall conform to provisions outlined in Chapters 3 through 8 of ACI 349-13 (ACI, 2014).

4b.2.4.2 Exceptions for Use of ACI 349-13

Regulatory Guide 1.69, Revision 1 (NRC, 2009) includes exceptions to the use of ACI 349-06. SHINE utilizes the revision to ACI 349-06 (ACI, 2007) and ACI 349-13 (ACI, 2014), and has identified the following exceptions to align with the intent of the exceptions listed in Regulatory Guide 1.69, Revision 1. ACI 349-13, Section 1.2.2, states that input and output data shall be retained as documentation when software is used for the calculation. The software itself and other related documentation is retained as well.

SHINE does not utilize the following sections of ACI 349-13:

- Section 3.3.1: The exception portion of the section is not followed.
- Section 3.3.2 references ACI 318-08, Section 3.3.2 (ACI, 2008). The text in ACI 318-08, Section 3.3.2 stating, “These limitations shall not apply if, in the judgment of the licensed design professional, workability and methods of consolidation are such that concrete can be placed without honeycombs or voids,” is not followed.
- Section 5.4.1 references ACI 318-08, Section 5.4.1 (ACI, 2008). The text in ACI 318-08, Section 5.4.1 stating, “If data required by 5.3 are not available, concrete proportions shall be based upon other experience or information, if approved by the licensed design professional. The required average compressive strength f'cr of concrete produced with materials similar to those proposed for use shall be at least 1200 psi greater than f'c. This alternative shall not be used if f'c is greater than 5000 psi,” is not followed.
- Section 5.6.2.3: “When total quantity of a given class of concrete is less than 50 yd^3, strength tests are not required when evidence of satisfactory strength is submitted to and approved by the licensed design professional” is not followed. Instead, the provisions of Regulatory Position 5 of Regulatory Guide 1.142 for strength testing are utilized (NRC, 2001).
- Section 7.10 references ACI 318-08, Section 7.10 (ACI, 2008). The text in ACI 318-08, Section 7.10.3 stating, “It shall be permitted to waive the lateral reinforcement requirements of 7.10, 10.13, and 18.11 where tests and structural analysis show adequate strength and feasibility of construction,” is not followed.

4b.2.5 TEST PROGRAM

ANSI/ANS-6.3.1-1987 (R2015) (ANSI/ANS, 2015), Program for Testing Radiation Shields in Light Water Reactors (LWR), is used as a guide in the development of a test program to be used

in evaluating biological radiation shielding in the SHINE facility under normal operating conditions, including anticipated operational occurrences.

4b.2.6 TECHNICAL SPECIFICATIONS

Certain material in this section provides information that is used in the technical specifications. This includes limiting conditions for operation, setpoints, design features, and means for accomplishing surveillances. In addition, significant material is also applicable to, and may be used for, the bases that are described in the technical specifications.

Figure 4b.2-1 – Vault Shielding and Pipe Penetration - General Arrangement (Not to Scale)

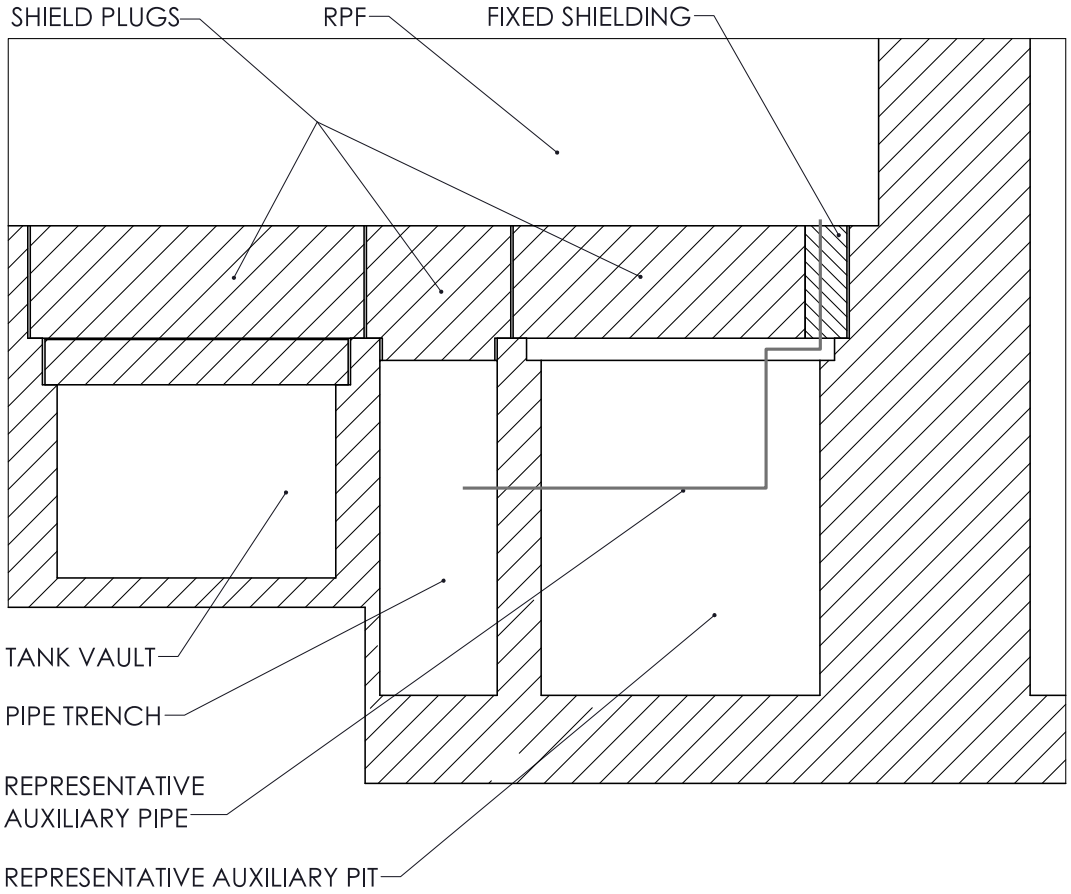

Figure 4b.2-2 – Waste Bore Hole Shielding – General Arrangement (Not to Scale)

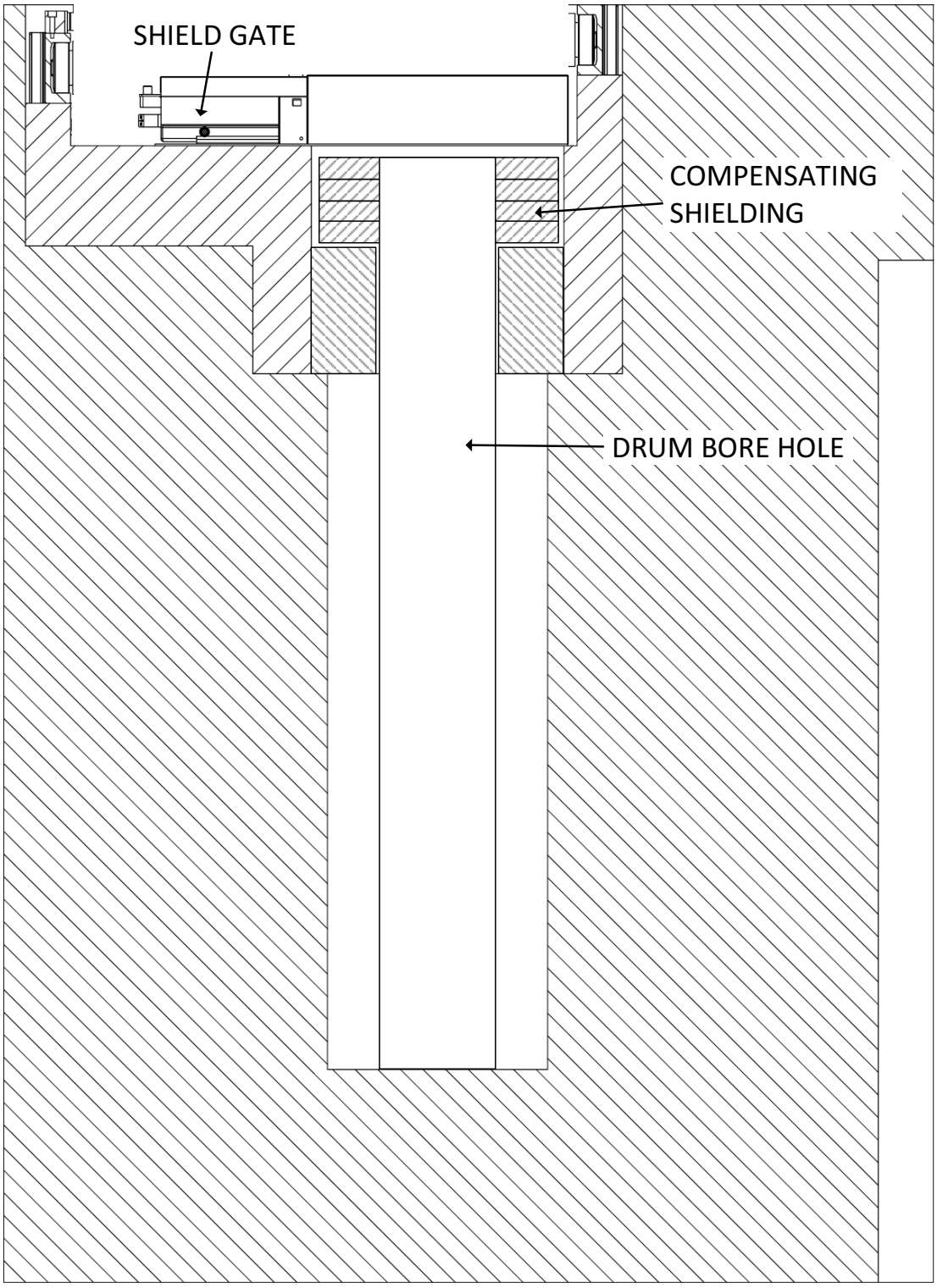

Figure 4b.2-3 – RLWI Shielding Entry and Exit Facilities - General Arrangement (Not to Scale)

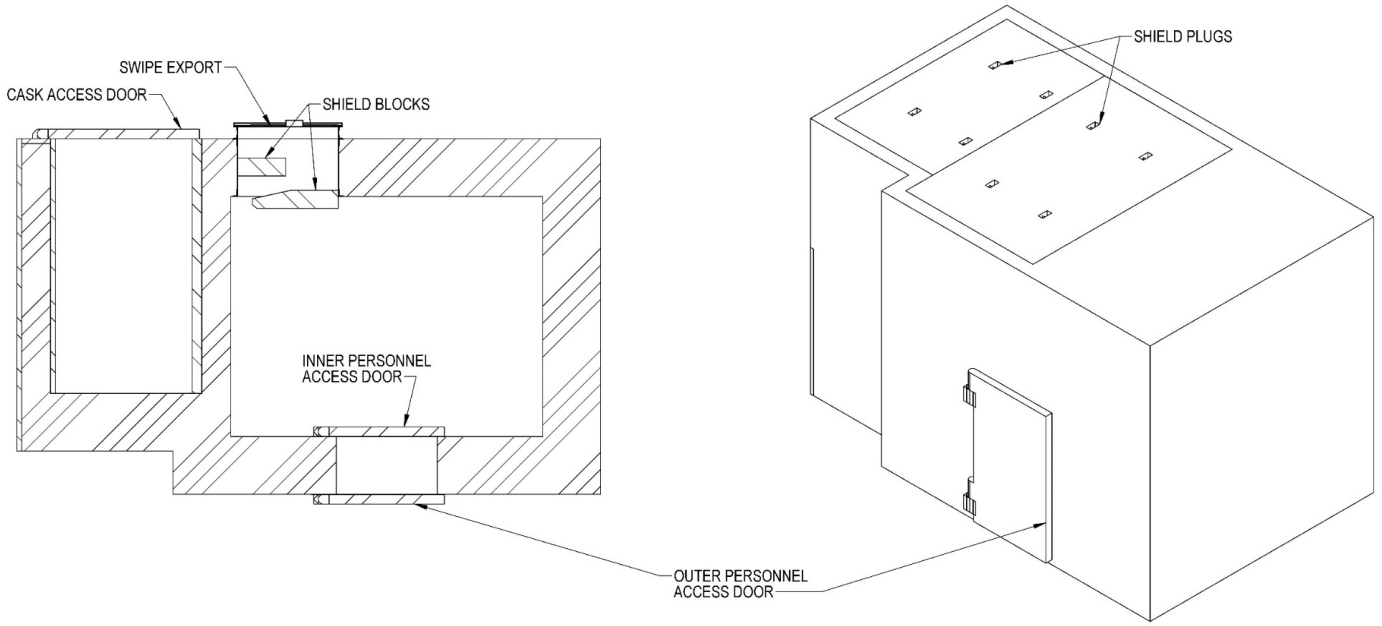

Proprietary Information – Withheld from public disclosure under 10 CFR 2.390(a)(4)
Export Controlled Information – Withheld from public disclosure under 10 CFR 2.390(a)(3)
Security-Related Information – Withheld under 10 CFR 2.390(d)

Figure 4b.2-4 – Supercell Shielding - General Arrangement (Not to Scale)

4b.3 RADIOISOTOPE EXTRACTION SYSTEM

4b.3.1 RADIOISOTOPE EXTRACTION PROCESS DESCRIPTION

The molybdenum (Mo) extraction and purification system (MEPS) and the iodine (I) and xenon (Xe) purification and packaging (IXP) system are used to separate specific fission products from the target solution. Target solution is normally directed through the MEPS following irradiation. Target solution can then be directed to IXP after passing through MEPS.

MEPS performs fission product separation from target solution using a [ ]PROP/ECI adsorption column.

IXP performs fission product separation from target solution using [

]PROP/ECI.

4b.3.1.1 Process Functions

The process functions of MEPS and IXP are described in Section 4b.1.

4b.3.1.2 Safety Functions

The safety functions of MEPS and IXP are described in Section 4b.1.

4b.3.1.3 Primary System Interfaces

A listing of system interfaces of MEPS and IXP are provided in Table 4b.3-1 and Table 4b.3-2, respectively.

4b.3.1.4 Process Sequence

This process sequence includes the extraction, concentration, and purification steps of the MEPS, and the extraction and purification steps of the IXP. Hot water is provided by the MEPS hot water loop, described in Subsection 4b.3.5. Figure 4b.3-1 provides a process flow diagram (PFD) of the process steps of MEPS and Figure 4b.3-2 provides a PFD of the IXP process.

4b.3.1.4.1 Molybdenum Radioisotope Extraction and Concentration Process Sequence

The following steps are used for extracting and concentrating the radioisotope molybdenum-99 (Mo-99):

1. Irradiated target solution is transferred to the MEPS using the vacuum transfer system (VTS). The VTS is described in Section 9b.2.
2. Inside the supercell, the irradiated target solution is pumped by the extraction column feed pump through heat exchangers to raise the temperature of the solution to improve the adsorption process. The target solution is heated to nominally 158°F to 203°F (70°C to 95°C). The heating process is designed to prevent boiling of the target solution.
3. The irradiated target solution flows through the extraction column, where Mo is adsorbed. The Mo extraction column contains a fixed bed of [ ]PROP/ECI. Extraction of the Mo

from the irradiated target solution takes approximately [ ]PROP/ECI per target solution batch.

4. After the irradiated target solution passes through the extraction column and target solution heat exchanger, it is directed to the target solution storage system (TSSS), IXP, or radioactive liquid waste storage (RLWS).
5. The column is washed with sulfuric acid. As small amounts of target solution are contained in the interstitial column spaces and piping, uranium is recovered in the initial sulfuric acid wash. This recovered uranium solution can be directed to follow the target solution batch or be sent to RLWS. The remainder of the wash is directed to RLWS.
6. The column is then washed with water to remove acid remaining on the column. The water wash is drained to the RLWS.
7. The extraction column is eluted with the extraction column eluent, sodium hydroxide, to extract the Mo-99. The eluate associated with this process is transferred to the Mo-99 eluate hold tank.
8. The extraction column is washed with deionized water. The water is drained to the Mo-99 eluate hold tank or RLWS.
9. The collected Mo-bearing solution is re-acidified with nitric acid.
10. The Mo-bearing solution [

]PROP/ECI.

11. [

]PROP/ECI

12. If replacement is required for product purity or product yield purposes, the Mo-99 extraction column [ ]PROP/ECI disconnected and removed from service. The extraction column [ ]PROP/ECI placed on a decay storage rack prior to being transferred into the waste export drum. The solid radioactive waste packaging (SRWP) system is described in Subsection 9b.7.5. A new Mo extraction column [ ]PROP/ECI then installed.

The radioactive inventory in the extraction and concentration process is evaluated for release in the safety analysis. The engineered safety features actuation system (ESFAS) detects unacceptable releases from the extraction cell, if they were to occur, and provides confinement functions to maintain doses within acceptable levels. Section 7.5 provides a detailed description of ESFAS. See Section 6b.2 for a description of confinement.

4b.3.1.4.2 Molybdenum Radioisotope Purification Process Sequence

The purification process for the Mo occurs in the Mo-99 purification hot cell, which is a portion of the supercell.

The Mo-99 purification process does not involve any significant quantities of special nuclear material (SNM). The radioisotopes involved are the Mo isotopes and any impurities that have followed the Mo through the extraction process. Radioactive material inventories are described in Subsection 4b.3.2 and Section 11.1.

First, solution received from the extraction process is collected in an evaporator. The volume of solution is decreased to match the input requirements of the subsequent purification steps. The evaporator condensate is collected and directed towards the RLWS.

The subsequent purification steps use a laboratory scale process, which was derived from the low enriched uranium (LEU)-modified Cintichem process (ANL, 2016). The purification process consists of precipitation of contaminants, chelation of the Mo, and filtering of the product solution. The resulting product is a Mo-99, sodium hydroxide solution, with a volume of [ ]PROP. Small samples are taken from the purification process and transported to the analytical laboratories to verify product specifications are met. The product bottle is transferred to the Mo isotope product packaging system (MIPS) to prepare for shipment.

The radioactive inventory in the purification process is evaluated for release in the safety analysis. The ESFAS system detects unacceptable releases from the purification cell, if they were to occur, and provides confinement functions to maintain doses within acceptable levels. Section 7.5 provides a detailed description of ESFAS. See Section 6b.2 for a description of confinement.

4b.3.1.4.3 Iodine and Xenon Radioisotope Extraction and Purification Process Sequence

The IXP separates the iodine from acidic solution and purifies it [ ]PROP/ECI. The separation and purification of the iodine from the solution occurs in the IXP hot cell. [ ]PROP/ECI There is one IXP hot cell in the radioisotope production facility (RPF).

The following steps are used for extracting the radioisotopes I-131 and Xe-133:

1. Acidic solution is transferred from MEPS for iodine removal using the pumps provided in the MEPS system. The solution can be target solution [ ]PROP/ECI Figure 4b.3-1 identifies the MEPS transfer points to the IXP system.
2. Solution is pumped through the iodine recovery column to separate iodine from the bulk solution. [ ]PROP/ECI
3. The effluent from the adsorption process is directed to TSSS or RLWS.
4. The iodine recovery column is then washed to prepare for subsequent processing steps. [ ]PROP/ECI The washes are directed to TSSS as needed for uranium recovery, and the remainder is directed to RLWS.
5. The iodine recovery column is eluted [ ]PROP/ECI and drained to the IXP elution tank. Any required adjustments to the solution are made in this tank.
6. [ ]PROP/ECI
7. The resulting product is an iodine-131, sodium hydroxide solution.
8. [

]PROP/ECI The cryotrap is reheated to desorb the xenon and allow it to be packaged.

9. Xenon is transferred to a xenon product gas bottle meeting customer requirements and shipping requirements. The resulting product is xenon-133 gas, with a volume of [ ]PROP/ECI.
10. The iodine product bottle is transferred to the MIPS system to prepare for shipment.
11. The xenon product bottle is transferred to the MIPS system to prepare for shipment.
12. If replacement is required for product purity or product yield purposes, the iodine recovery, [ ]PROP/ECI disconnected and removed from service. The columns are placed on a decay storage rack prior to being transferred into the waste export drum. The SRWP system is described in Subsection 9b.7.5. New columns are then installed to replace the spent columns.

The radioactive inventory in the IXP process is evaluated for release in the safety analysis. The ESFAS system detects unacceptable releases from the hot cell, if they were to occur, and provides confinement functions to maintain doses within acceptable levels. Section 7.5 provides a detailed description of ESFAS.

4b.3.1.4.4 Process Equipment

The following is process equipment associated with the Mo-99 extraction system.

Components within the extraction cell are typically replaceable with the manipulators. Materials of construction for the below listed components are principally stainless steel. Materials of construction for extraction components are chemically compatible with the process fluids (including target solution for relevant components) to ensure corrosion resistance, designed to prevent galvanic coupling concerns, and perform acceptably under the radiation environment. Alloys that meet these criteria include type 316/316L stainless steel, type 347 stainless steel, type 304/304L stainless steel, and Alloy 20.

Nonsafety-related monitoring and control of MEPS is provided by the process integrated control system (PICS), which is described in Section 7.3. PICS monitors valve position, process temperature, pressure, and pump operation in MEPS. PICS also provides interlocks to minimize process errors.

Safety-related monitoring and control of MEPS is provided by ESFAS. ESFAS monitors positions of valves performing a safety-related function in MEPS, conductivity in the MEPS hot water return, radiation in the hot cell ventilation ducts, and level detection in the radioactive drain system (RDS). In the event ESFAS detects an abnormal condition in any of these parameters, ESFAS actuates to isolate the MEPS hot cell and place MEPS equipment in a safe condition. Details on each ESFAS operation and actuation are described in Section 7.5.

MEPS isolation valves and conductivity instrumentation are the only components within the MEPS that are required to function during an accident to ensure doses to the public and workers meet acceptance criteria. A conductivity of greater than 500 micromho/cm in the MEPS heating loop would indicate a leak in the system and potential for dose to the workers. Components are designed to meet criticality safety controls. The ESFAS monitors the position of the extraction column upper and lower three-way valves as a criticality safety control, as referenced in Section 4b.1 and discussed in Section 6b.3.

The MEPS pipes and piping components that may contain uranyl sulfate or Mo eluate have a design pressure of 100 psi. The primary MEPS process equipment is described below.

a. Target solution heat exchanger
   - Description: cools target solution leaving MEPS and pre-heats target solution prior to extraction
   - Outlet temperature: nominally 68°F-158°F (20°C-70°C)
   - Design pressure: 100 pounds per square inch (psi)

b. Extraction column preheater
   - Description: pre-heats target solution prior to extraction
   - Exchange fluid: Hot water
   - Outlet temperature: nominally 158°F-203°F (70°C-95°C)
   - Design pressure: 100 psi

c. Mo-99 extraction column
   - Description: extracts Mo-99 from uranyl sulfate solution
   - Volume: [ ]PROP/ECI
   - Design pressure: 100 psi
   - Packing: [ ]PROP/ECI

d. [
   -

]PROP/ECI

e. Extraction column feed pump
   - Description: provides motive force to move solution through the Mo-99 extraction column
   - Design flow rate: [ ]PROP/ECI
   - Maximum output pressure (protected by internal or external overpressure protection): up to 50 psig

f. [
   -

]PROP/ECI

g. Mo-99 eluate hold tank
   - Description: holds Mo-99 eluate and allows for re-acidification of solution [ ]PROP/ECI
   - Size: [ ]PROP/ECI
   - Design pressure: 15 psi (normally vented)

Chemical reagents are supplied to MEPS via the facility chemical reagent system (FCRS). FCRS reagents may be pre-heated prior to introduction into the extraction cell. See Subsection 9b.7.10 for the description of FCRS.

Components within the IXP cell are typically replaceable with the manipulators. Materials of construction for the below listed components are principally stainless steel. Materials of construction for extraction components are chemically compatible with the process fluids (including target solution for relevant components) to ensure corrosion resistance, designed to prevent galvanic coupling concerns, and perform acceptably under the radiation environment. Alloys that meet these criteria include type 316/316L stainless steel, type 347 stainless steel, type 304/304L stainless steel, and Alloy 20.

Nonsafety-related monitoring and control of IXP is provided by PICS, which is described in Section 7.3. PICS monitors valve position, process temperature and pressure, and operation of each component in the IXP hot cell. PICS also provides interlocks to minimize process errors.

Safety-related monitoring and control of IXP is provided by ESFAS. ESFAS monitors the position of valves performing a safety-related function in IXP, radiation in the hot cell ventilation, and level detection in the RDS. In the event ESFAS detects an abnormal condition in any of these parameters, ESFAS actuates to isolate the IXP hot cell and place IXP equipment in a safe condition. Details on each ESFAS operation and actuation are described in Section 7.5.

IXP isolation valves are the only components within the IXP that are required to function during an accident to ensure doses to the public and workers meet acceptance criteria. Components are designed to meet criticality safety controls. The ESFAS monitors the position of the IXP upper and lower three-way valves as a criticality safety control, as discussed in Section 6b.3.

The IXP pipes and piping components that may contain uranyl sulfate or iodine eluate have a design pressure of 100 psi. The primary IXP process equipment is described below.

a. Iodine recovery column
   - Description: extracts iodine from uranyl sulfate solution [ ]PROP/ECI.
   - Volume: [ ]PROP/ECI.
   - Design pressure: 100 psi.
   - Packing: [ ]PROP/ECI

b. [
   -]PROP/ECI

c. [
   -]PROP/ECI

d. [
   •
   ]PROP/ECI

e. IXP eluate hold tank
   • Description: holds iodine recovery column eluate and allows for adjustment of solution [ ]PROP/ECI
   • Size: [ ]PROP/ECI
   • Design pressure: 15 psi (normally vented)

f. Xenon dryer bed and cryotrap
   • Description: [ ]PROP/ECI
   • Cryotrap size: [ ]PROP/ECI
   • Design pressure: 15 psi (normally vented).

4b.3.2 PHYSICAL PROPERTIES

4b.3.2.1 Target Solution Properties

This subsection describes the physical, chemical, and radiological properties of the irradiated target solution, which is received from the target solution vessel (TSV) dump tank via the VTS.

4b.3.2.1.1 Physical and Chemical Properties

Table 4a2.2-1 shows the chemical properties of the target solution.

The physical and chemical form and inventory of SNM in the RPF is provided in Table 4b.4-1.

4b.3.2.1.2 Radioisotope Properties

The highest activity in irradiated target solution in the RPF is immediately following transfer from the irradiation facility (IF). The irradiated target solution radioisotope inventory, including inventory assumptions concerning irradiation cycles and decay periods, is described in Section 11.1. The total inventory of irradiated target solution within a MEPS or IXP portion of the supercell is significantly less, since the supercell never contains an entire TSV batch.

4b.3.2.2 Hazardous Chemicals

Table 4b.3-3 and Table 4b.3-4 provide the chemical inventories associated with the MEPS. In addition to the reagents used, the MEPS receives target solution. Section 4b.4 provides a description of the target solution preparation process. Off-gases evolved during MEPS processing are generally swept to PVVS. Should off-gases be released during processing, they are released within the supercell, are isolated from workers by the supercell confinement, and are processed by the radiological ventilation zone 1 (RVZ1) system, as described in Section 9a2.1.

Table 4b.3-5 provides the chemical inventories associated with the IXP. In addition to the reagents used, the IXP receives target solution. Section 4b.4 provides a description of the target solution preparation process. Off-gases evolved during IXP processing are generally swept to PVVS. Should off-gases be released during processing, they are released within the supercell, are isolated from workers by the supercell confinement, and are processed by the RVZ1 system, as described in Section 9a2.1.

4b.3.3 CRITICALITY CONTROL FEATURES

The MEPS and IXP prevent inadvertent criticality through criticality control features, described in detail in Section 6b.3.

4b.3.4 SHIELDING AND RADIOLOGICAL PROTECTION

The MEPS and IXP processes described above are performed in the production facility biological shield (PFBS) hot cells, which supports compliance with the as low as reasonably achievable (ALARA) objectives and dose limits required by 10 CFR 20. Refer to Section 11.1 for the facility radiation protection description, and Section 4b.2 for description of the PFBS.

The processes are remotely controlled, and performed with remote manipulators, with minimal automated sequences. Radiation monitors and alarms are used to monitor release of radiological materials, monitor high background gamma dose levels, and to detect criticality events were such an event to occur.

Piping that contains potentially radioactive material is routed through shielded pipe trenches to limit the worker exposure to radiation. Tanks within the MEPS are inside shielded hot cells, so additional tank shielding is not required.

4b.3.5 MEPS HOT WATER LOOP SUBSYSTEM

The MEPS hot water loop subsystem is a closed-loop hot water system for process heating within the extraction hot cells. The temperature of the water loop is less than 212°F (100°C), to provide assurance that solutions warmed by the hot water loop do not boil.

The MEPS hot water loop subsystem supports the process of separating Mo from target solution. The MEPS hot water loop subsystem is also used as needed to preheat the reagents for Mo extraction and concentration before they are pumped into the hot cell. The subsystem provides branch connections at the hot cells for the FCRS equipment designed to preheat reagents before they are introduced into the hot cell processes.

Deionized water is circulated through the hot water loop to provide heating service to the MEPS preheater and the FCRS components at the supercell. Water is pumped through and heated by an electric circulation heater. A temperature instrument at the heater outlet feeds back to the heater controller to ensure temperature of the water supply is consistent. The header is routed from the heater outlet to the supercell. Branches from the header are taken at each hot cell where hot water is needed.

After the supply branches are taken from the header, the header turns back to the hot water loop skid. A flow control valve is installed on a by-pass to the hot water return header. The flow control valve ensures flow to each hot cell is constant by maintaining the pressure in the supply header.

The header returns to the skid and enters the air separator to remove any entrained gases. An expansion tank downstream of the separator provides constant pressure to the suction side of the pump. A pressure relief valve is provided at the outlet of the pump. The discharge of the relief valve is routed to a container that sits below the skid. The facility deionized water system provides make up water as needed.

The PICS accepts outputs from the MEPS hot water loop subsystem instruments. PICS is further discussed in Section 7.3.

Conductivity sensors are provided in the MEPS hot water loop to detect ingress of radioactive material if it were to occur. If conductivity exceeds predetermined limits, ESFAS initiates a MEPS heating loop isolation, closing the hot water loop inlet and outlet isolation valves and tripping the extraction feed pump breakers. MEPS also closes the hot water loop inlet and outlet isolation valves on level detected in RDS and as part of a supercell isolation. Section 7.5 provides a detailed description of ESFAS.

4b.3.6 TECHNICAL SPECIFICATIONS

Certain material in this section provides information that is used in the technical specifications. This includes limiting conditions for operation, setpoints, design features, and means for accomplishing surveillances. In addition, significant material is also applicable to, and may be used for, the bases that are described in the technical specifications.

Table 4b.3-1 – MEPS Interfaces

Interfacing System	Interface Description
Vacuum transfer system (VTS)	The VTS transfers target solution to MEPS for Mo extraction and provides vacuum service for the evaporator.
Process vessel vent system (PVVS)	The MEPS interfaces with the PVVS at two locations, the vent lines from the Mo eluate hold tank and the MEPS condensate tank.
Radioisotope process facility cooling system (RPCS)	The RPCS provides cooling water to the Mo eluate evaporator condenser.
Normal electrical power supply system (NPSS)	Electrical power is provided to the extraction column feed pumps, [ ]PROP/ECI, the Mo eluate evaporator, valves, and ancillary equipment.
Radioactive liquid waste storage (RLWS)	Solutions resulting from the processing of Mo batches are discharged to the RLWS tanks.
Target solution staging system (TSSS)	Target solution batches may be returned to the target solution hold tanks following separation of Mo from the target solution.
Solid radioactive waste packaging (SRWP)	The MEPS interfaces with the SRWP system at the solid waste shielded drum interface point.
Molybdenum isotope product packaging system (MIPS)	The MEPS interfaces with the MIPS by transferring a container with the purified Mo-99 from the MEPS area of the supercell to the MIPS area of the supercell.
Engineered safety features actuation system (ESFAS)	ESFAS actuates isolation functions of the MEPS to prevent unacceptable radiological releases.
Facility nitrogen handling system (FNHS)	The FNHS provides nitrogen to operate the extraction column feed pumps [ ]PROP/ECI
Process integrated control system (PICS)	PICS allows operators to monitor MEPS parameters and control process functions.
Iodine and xenon purification and packaging (IXP)	Target solution [ ]PROP/ECI transferred to IXP from MEPS for iodine processing.
Production facility biological shield (PFBS)	The MEPS components with radiological inventories are within a hot cell to minimize worker doses.
Facility chemical reagent system (FCRS)	The FCRS provides chemical reagents to MEPS as needed.
Nitrogen purge system (N2PS)	The N2PS ventilates the MEPS tanks if normal ventilation provided by PVVS were to fail.

Table 4b.3-2 – IXP Interfaces

Interfacing System	Interface Description
Engineered safety features actuation system (ESFAS)	ESFAS actuates isolation functions of the IXP to prevent unacceptable radiological releases.
Molybdenum extraction and purification system (MEPS)	The MEPS supplies acidic solutions for the IXP to separate from iodine product.
Molybdenum isotope product packaging system (MIPS)	The iodine-131 and xenon-133 production containers are transferred to the packaging hot cell for labeling and placement in shipping containers by MIPS.
Solid radioactive waste packaging (SRWP)	Solid wastes of IXP are placed into waste containers and exported from the hot cell to SRWP.
Target solution staging system (TSSS)	Target solution batches may be discharged to TSSS following the separation of iodine.
Radioactive liquid waste storage (RLWS)	Liquid wastes resulting from the processing of the iodine batches are discharged to the RLWS tanks.
Facility nitrogen handling system (FNHS)	The FNHS supplies nitrogen to purge the IXP product bottle headspace and to cool the cryotrap.
Process vessel ventilation system (PVVS)	Tanks in the IXP are ventilated by the PVVS to mitigate radiological hydrogen generation. The cryotrap discharges gaseous radiological wastes to the PVVS.
Process integrated control system (PICS)	PICS allows operators to monitor IXP parameters and control process functions.
Facility chemical reagent system (FCRS)	The FCRS provides chemical reagents to IXP as needed.
Production facility biological shield (PFBS)	The IXP components with radiological inventories are within a hot cell to minimize worker doses.

Table 4b.3-3 – MEPS Extraction Chemical Inventory (Approximate)

Chemical Name (CAS Number)	Chemical Concentration	Chemical Inventory in Extraction Portion of Supercell
Ammonium hydroxide (1336-21-6)	< 2 M	< 5 L
Nitric acid (7697-37-2)	< 12 M	< 5 L
Sodium hydroxide (1310-73-2)	< 2 M	< 40 L
Sulfuric acid (7664-93-9)	< 0.5 M	< 25 L

Table 4b.3-4 – MEPS Purification Chemical Inventory (Approximate)

Chemical Name (CAS Number)	Chemical Concentration	Chemical Inventory in Purification Portion of Supercell
Alpha-benzoin oxime (441-38-3)	< 10% wt.	Up to 1 L
Hydrochloric acid (7647-01-0)	< 5 M	Up to 1 L
Hydrogen peroxide (7722-84-1)	< 10% wt.	Up to 1 L
Molybdenum trioxide (1313-27-5)	< 100 mg/mL	Up to 1 L
Nitric acid (7697-37-2)	< 10 M	Up to 1 L
Potassium permanganate (7722-64-7)	< 10% wt.	Up to 1 L
Potassium hexachlororuthenate (23013-82-3)	< 50 mg/mL	Up to 1 L
Rhodium chloride (10049-07-7)	< 100 mg/mL	Up to 1 L
Silver nitrate (7761-88-8)	< 20% wt.	Up to 1 L
Sodium hydroxide (1310-73-2)	< 1 M	Up to 1 L
Sodium iodide (7681-82-5)	< 10 mg/mL	Up to 1 L

Table 4b.3-5 – IXP Chemical Inventory (Approximate)

Chemical Name (CAS Number)	Chemical Concentration	Chemical Inventory in IXP Portion of Supercell
Sulfuric acid (7664-93-9)	< 2 M	< 20 L
Sodium hydroxide (1310-73-2)	< 2 M	< 35 L

Figure 4b.3-1 – MEPS Process Flow Diagram
(Sheet 1 of 2)

Figure 4b.3-1 – MEPS Process Flow Diagram
(Sheet 2 of 2)

Figure 4b.3-2 – IXP Process Flow Diagram

4b.4 SPECIAL NUCLEAR MATERIAL PROCESSING AND STORAGE

Special nuclear material (SNM) is used throughout the radioisotope production facility (RPF) radiologically controlled area (RCA) in both unirradiated and irradiated forms for the production of medical isotopes.

Molybdenum (Mo) is extracted from the irradiated SNM in the Mo extraction and purification system (MEPS) and iodine (I) is extracted from the irradiated SNM in the iodine and xenon purification and packaging (IXP) system as described in Section 4b.3. Following isotope extraction, the target solution is directed to one of the target solution hold tanks, the target solution storage tanks, or the radioactive liquid waste storage (RLWS) system. In the target solution hold tanks, sampling and adjustments to chemistry are performed as required. Target solution is stored in favorable geometry tanks that are designed to remain subcritical. Subsection 4b.4.1 discusses the processing of irradiated SNM.

The following are the major SNM processing steps:

- Dissolve uranium oxide in sulfuric acid to form target solution.
- Extract radioisotopes from irradiated target solution.
- Store and transport irradiated target solution, allowing for in-process adjustments.

The facility receives and stores new shipments of uranium metal and uranium oxide. Uranium metal is converted to uranium oxide in the uranium receipt and storage system (URSS). Uranium oxide is used to prepare unirradiated target solution. Uranium oxide is stored in uranium oxide storage canisters and is transported from the URSS to the target solution preparation system (TSPS) area. Subsection 4b.4.2 discusses the preparation of the target solution.

Shipments of SNM are received at the facility in solid form. The shipments consist of low enriched uranium (LEU), uranium metal or uranium oxide enriched to 19.75 ± 0.2 percent uranium-235 (U-235). The SNM is shipped in approved shipping containers (a general-purpose Type B fissile material shipping container). The SNM is removed from the shipping containers and stored in uranium metal storage canisters or uranium oxide storage canisters in a favorable configuration storage rack. Subsection 4b.4.2 provides more detail on the receipt and storage of unirradiated SNM.

The RPF contains uranium in multiple forms: uranium metal, uranium oxide, and uranyl sulfate. A small amount of plutonium is generated during the irradiation cycle, as described in Section 1.1, and is transferred to the RPF in aqueous form within the target solution. Table 4b.4-1 provides the total inventory of SNM in the main production facility. Table 4b.4-2 provides the physical and chemical forms of SNM within RPF processes. Refer to Table 4a2.2-1 for the target solution batch uranium inventory. See Table 4a2.6-2 for the target solution batch plutonium inventory. Refer to Section 4b.1 for maximum SNM inventory within each RPF process system.

The SNM processing and storage systems prevent inadvertent criticality through criticality safety controls applied to the design of tanks, process equipment, storage containers, and other components that may handle the SNM, as well as through other controls detailed in the nuclear criticality safety evaluations, as described in Section 6b.3.

Favorable geometry tanks are designed to be subcritical at the most reactive credible uranium concentration, [

]PROP/ECI. This design philosophy adds conservatism to the criticality safety process and decreases reliance on active or administrative controls. A detailed description of the criticality safety program is provided in Section 6b.3.

The processing and storage of irradiated SNM is performed in tank vaults (below-grade concrete enclosures providing shielding and confinement of hazardous materials) and shielded hot cells (controlled-environment work enclosures providing confinement of hazardous materials), which supports compliance with as low as reasonably achievable (ALARA) objectives and dose limits required by 10 CFR 20, as described in Section 4b.2 and Section 11.1. Gloveboxes are used to minimize personnel exposure to unirradiated SNM.

4b.4.1 PROCESSING OF IRRADIATED SPECIAL NUCLEAR MATERIAL

4b.4.1.1 Process Description

4b.4.1.1.1 Process Functions

Processing of irradiated target solution includes in-process adjustments within the target solution storage system (TSSS). Storage of in-process target solution is also done by TSSS. Extraction of medical isotopes is discussed in Section 4b.3. Waste processing of spent solutions are discussed in Section 9b.7 and Section 11.2.

The TSSS provides eight target solution hold tanks and two target solution storage tanks. Each target solution hold tank is connected to one target solution vessel (TSV) via the vacuum transfer system (VTS). Target solution in the target solution hold tanks and target solution storage tanks is shielded from workers by the production facility biological shield (PFBS) and maintained in a favorable geometry tank. The process vessel vent system (PVVS) provides sweep gas flow over the tanks which removes gas buildup and maintains hydrogen concentrations at acceptable levels. The process flow diagram for TSSS is provided in Figure 4b.4-1.

Prior to irradiation, the target solution is sampled for pH and uranium concentration, and the solution is adjusted if required. Reagents, including sulfuric acid and water, are added using TSPS, MEPS, or IXP. Additional uranyl sulfate is added using TSPS. The target solution hold tanks are mixed by gas sparging to ensure uniform samples and mixing of reagent additions.

The TSSS tanks have a design pressure of 15 psi. The TSSS pipes and piping components have a design pressure of 100 psi.

The process and safety functions of TSSS are provided in Section 4b.1. The system interfaces for TSSS are provided in Table 4b.4-3.

The primary process equipment for TSSS includes:

a. Target solution hold tank
   - Type: annular
   - Liquid capacity: [ ]PROP/ECI
   - Gas space: [ ]PROP/ECI
   - Quantity: 8

b. Target solution storage tank
   - Type: annular
   - Liquid capacity: [ ]PROP/ECI
   - Gas space: [ ]PROP/ECI
   - Quantity: 2

4b.4.1.2 Physical Properties

4b.4.1.2.1 Process Fluid Properties

This subsection describes the approximate physical, chemical, and radiological isotope properties of the solutions containing irradiated SNM. The solution properties are presented in quantities representing a single batch of target solution.

4b.4.1.2.2 Physical and Chemical Properties

The physical and chemical properties of the target solution, including target solution batch volume, LEU concentration, and pH are provided in Table 4a2.2-1.

4b.4.1.2.3 Radioisotope Properties

The highest activity in irradiated target solution in the RPF is immediately following transfer from the irradiation facility (IF). The irradiated target solution radioisotope inventory, including inventory assumptions concerning irradiation cycles and decay periods, is described in Section 11.1.

4b.4.1.2.4 Hazardous Chemicals

For solution adjustments in TSSS, adjustments may include uranyl sulfate and sulfuric acid additions, which are hazardous chemicals. Chemicals are prepared within well-ventilated areas and within enclosures as needed to prevent exposure. Off-gases evolved within the TSSS are isolated from workers and ventilated by the PVVS, as described in Section 9b.6. Uranyl sulfate is prepared in the TSPS, as described in Subsection 4b.4.2.2. SHINE has chemical inventory controls, including separation of chemicals, based on the potential for exothermic reactions. Table 4b.4-4 provides the TSPS hazardous chemical inventory.

4b.4.1.2.5 Special Nuclear Material

The SNM within the irradiated target solution in the RPF are LEU and small amounts of plutonium. The LEU is in the form of uranyl sulfate, and the plutonium is in aqueous form in the target solution. The TSSS contains up to eight batches of target solution in the target solution hold tanks and up to two batches in the target solution storage tanks. Table 4a2.2-1 provides the uranium inventory in a target solution batch. Table 4a2.6-2 provides the plutonium inventory in a target solution batch. Section 4b.1 provides the maximum SNM inventory within each RPF process system.

4b.4.1.3 Criticality Control Features

TSSS criticality safety controls are summarized in Section 4b.1 and discussed in detail in Subsection 6b.3.2.1.

4b.4.1.4 Shielding and Radiological Protection

Storage and adjustment of the target solution is performed in TSSS within the shielded tank vaults of PFBS. Piping that contains potentially radioactive material is transferred through shielded pipe trenches to limit the exposure of individuals to radiation. Radiation monitors and alarms are used to detect release of radiological materials, detect high background gamma dose levels, and to detect criticality were it to occur as described in Subsection 6b.3.3 and Section 7.7.

4b.4.1.5 Technical Specifications

Certain material in this section provides information that is used in the technical specifications. This includes limiting conditions for operation, setpoints, design features, and means for accomplishing surveillances. In addition, significant material is also applicable to, and may be used for, the bases that are described in the technical specifications.

4b.4.2 PROCESSING OF UNIRRADIATED SPECIAL NUCLEAR MATERIAL

The following sections provide detailed descriptions of the processes in URSS and TSPS. Process functions, safety functions, and a process description for each system are provided in Subsection 4b.1.3.6 for URSS and Subsection 4b.1.3.1 for TSPS. Process flow diagrams for the URSS and TSPS are provided in Figure 4b.4-2 and Figure 4b.4-3, respectively.

Unirradiated SNM shipments are received in solid form as uranium metal or uranium oxide. The shipments consist of LEU (i.e., less than 20 percent U-235). Nominal enrichment of the received uranium is 19.75 ± 0.2 percent. The SNM is transported in approved shipping containers and is stored in those containers in accordance with packaging limitations for use. The shipping containers are manually transferred to the [ ]^{SRI} where the SNM may be removed from the shipping containers. Each package of SNM is inspected upon receipt. Dependent on the form received, the SMN is repackaged from the shipping containers to either uranium metal storage canisters or uranium oxide storage canisters and placed in a favorable configuration on the uranium metal storage rack or uranium oxide storage rack for criticality safety.

The uranium metal is converted to uranium oxide by a furnace within the URSS glovebox. The uranium oxide produced from the oxidation of unirradiated uranium metal is stored in uranium oxide storage canisters in favorable configuration for criticality safety on the uranium oxide storage rack within the [ ]^{SRI}. Uranium oxide is stored for future production of uranyl sulfate target solution.

4b.4.2.1 Uranium Receipt and Storage System

4b.4.2.1.1 Safety Functions

The safety functions of URSS are provided in Section 4b.1. The system interfaces for URSS are provided in Table 4b.4-5.

4b.4.2.1.2 Uranium Metal Receipt

Shipments of uranium metal are received in licensed shipping containers. Shipping containers are manually transferred to the [ ]^{SRI} within the RCA. Uranium metal

is stored in a favorable configuration for criticality safety within the shipping containers and is stored in those containers in accordance with packaging limitations for use. Operators verify supplied documentation and survey the shipping container and contents for damage.

Administrative criticality safety controls limit the handling of uranium from the shipping container to the URSS glovebox, as described in Section 6b.3.

Within the URSS glovebox, the uranium metal contents of the shipping container are sampled and verified for form and enrichment. Uranium metal is then repackaged into a uranium metal storage canister. The mass of uranium metal repackaged into a uranium metal storage canister is limited for criticality safety. The mass of SNM in the glovebox is limited for criticality safety. The uranium metal storage canister is then transferred to the uranium metal storage rack from the URSS glovebox. Criticality safety controls in the URSS are further described in Subsection 6b.3.2.7.

4b.4.2.1.3 Uranium Metal Storage

Uranium metal storage canisters are stored in the uranium metal storage rack within the [ ]^{SRI}. The uranium metal storage rack holds uranium metal storage canisters in a favorable configuration for criticality safety. The uranium metal storage rack is designed as an array of storage cells. Each storage cell may hold one uranium metal storage canister and the cubic dimensions for each storage cell are maintained. Criticality safety controls in the URSS are further described in Subsection 6b.3.2.7.

Uranium storage canisters are transferred individually from the uranium metal storage rack to the URSS glovebox for conversion to uranium oxide. Detailed descriptions of the metal to oxide conversion can be found in Subsection 4b.4.2.1.6.

4b.4.2.1.4 Uranium Oxide Receipt

Shipments of uranium oxide are received in licensed shipping containers. Shipping containers are manually transferred to the [ ]^{SRI} within the RCA. Uranium oxide is stored in a favorable configuration for criticality safety within the shipping containers and is stored in those containers in accordance with packaging limitations for use. Operators verify supplied documentation and survey the shipping container and contents for damage.

URSS administrative, criticality safety controls limit the handling of uranium oxide from the shipping container to the URSS glovebox, as described in Section 6b.3.

Within the URSS glovebox, the uranium oxide contents are sampled and verified for form, enrichment, and moisture content. Uranium oxide is then repackaged into a uranium oxide storage canister. The mass of uranium oxide repackaged into a uranium oxide storage canister is limited for criticality safety. The mass of SNM in the glovebox is limited for criticality safety. The uranium oxide storage canister is then transferred to the uranium oxide storage rack from the URSS glovebox prior to further processing. Criticality safety controls in the URSS are further described in Subsection 6b.3.2.7.

4b.4.2.1.5 Uranium Oxide Storage

Uranium oxide storage canisters are stored in the uranium oxide storage rack within the [ ]SRI. The uranium oxide storage rack holds uranium oxide storage canisters in a favorable configuration for criticality safety. The uranium oxide storage rack is designed as an array of storage cells. Each storage cell may hold one uranium oxide storage canister and the cubic dimensions for each storage cell are maintained. Criticality safety controls in the URSS are further described in Subsection 6b.3.2.7.

Uranium oxide storage canisters are transferred individually from the uranium oxide storage rack to the TSPS glovebox, located in the [ ]SRI for conversion to uranyl sulfate. A detailed description of the TSPS is provided in Subsection 4b.4.2.2.

4b.4.2.1.6 Uranium Metal to Oxide Conversion

Uranium metal is converted to uranium oxide thermally by an oxidation furnace within the URSS glovebox. Uranium metal storage canisters are transferred individually from the uranium metal storage rack to the URSS glovebox. Uranium metal storage canisters are imported into the URSS glovebox, and contents are transferred to the furnace.

The oxidation process results in the uranium metal being converted into a powder. To prevent any entrainment of the uranium oxide powder into the ventilation systems, the URSS glovebox is kept at negative pressure by radiological ventilation zone 1 (RVZ1) and equipped with high efficiency particulate air (HEPA) filters to remove particles at both the ventilation supply and exhaust penetrations of the glovebox. The volume of each filter housing is limited as a criticality safety control.

Before the uranium oxide is removed from the furnace, the process is verified to have spent sufficient time at a minimum sustained temperature to ensure metal has been converted to oxide. The uranium oxide is removed from the furnace and packed into a uranium oxide storage canister by the method described in Subsection 4b.4.2.1.4.

Criticality safety controls in the URSS are further described in Subsection 6b.3.2.7.

4b.4.2.2 Target Solution Preparation System

The TSPS produces a LEU, uranyl sulfate solution, which once qualified for use, is referred to as target solution. Solid uranium oxide is dissolved in a sulfuric acid solution to convert the uranium to uranyl sulfate. Hydrogen peroxide may be used as a catalyst to aid the conversion. The solution is adjusted as needed for pH and the batch is verified to be within the specifications of the target solution qualification program. Target solution is released by operators to the RPF for use in the irradiation cycle. Solutions prepared by TSPS may be used either as a fresh target solution batch or as makeup solution for in-use target solution batches in the RPF.

4b.4.2.2.1 Safety Functions

The safety functions of TSPS are provided in Section 4b.1. The system interfaces for TSPS are provided in Table 4b.4-6. The process flow diagram for TSPS are provided in Figure 4b.4-3.

Proprietary Information – Withheld from public disclosure under 10 CFR 2.390(a)(4)
Export Controlled Information – Withheld from public disclosure under 10 CFR 2.390(a)(3)
Security-Related – Withheld under 10 CFR 2.390(d)

4b.4.2.2.2 Dissolution of Uranium Oxide

Uranium oxide is converted to a uranyl sulfate solution within the uranyl sulfate dissolution tanks. Uranium oxide, within a uranium oxide storage canister, is transferred from the uranium oxide storage rack to the [ ]SRI. The uranium oxide storage canister is imported and opened within the TSPS glovebox. Only one uranium oxide storage canister is imported to the TSPS glovebox at any time. The TSPS glovebox is kept at negative pressure by RVZ1 and equipped with HEPA filters on the supply and exhaust connections. The volume of the filters is limited as a criticality safety control.

Measurement, by mass, of uranium oxide powder is performed in the TSPS glovebox, and the material is transferred to one of the two uranyl sulfate dissolution tanks via a normally closed port in the TSPS glovebox. Two ports are provided, one dedicated to each uranyl sulfate dissolution tank. The ports preclude backflow of liquid from a uranyl sulfate dissolution tank. Unused uranium oxide remains in the uranium oxide storage canister and is returned to the uranium oxide storage rack.

The uranyl sulfate dissolution tanks are designed with favorable dimensions for criticality safety and are spaced from one another to minimize reactivity by interaction. Sulfuric acid used to convert the uranium oxide to uranyl sulfate is added to the tank. Hydrogen peroxide may also be added as a catalyst, and uranyl peroxide is formed as an intermediate. Heat is applied to the uranyl sulfate dissolution tank to aid the conversion to uranyl sulfate. Heat also decomposes excess hydrogen peroxide if it is used as a catalyst. Throughout the conversion process, the tank may be agitated. A reflux condenser on the exhaust ventilation of the uranyl sulfate dissolution tank is used to condense and return evaporated water. Non-condensable gases are exhausted from the condenser to RVZ1 through a HEPA filter. The reflux condenser size is limited as a criticality safety control as described in Section 6b.3, but operation of the reflux condenser is not required to maintain a safe configuration.

On a leak of the reflux condenser into the dissolution tank, a high level in the tank results in an engineered safety features actuation system (ESFAS) Dissolution Tank Isolation, which closes the TSPS radioisotope process facility cooling system (RPCS) supply and return cooling valves, TSPS air inlet isolation valve, and TSPS RVZ1 exhaust isolation valve to prevent uranium bearing solution from exiting the tank.

Once operators verify the dissolution process is complete by sampling, the uranyl sulfate is pumped to the target solution preparation tank through a set of filters to remove any potentially undissolved solids. The filters are limited in size as a criticality safety control.

4b.4.2.2.3 Preparation of Target Solution

Both qualified target solution batches and uranyl sulfate makeup solutions are prepared for use in the target solution preparation tank. The target solution preparation tank has capacity for an entire batch of target solution and is a favorable geometry for criticality safety. Solutions are pumped into the target solution preparation tank from the uranyl sulfate dissolution tanks and blended to generate a target solution batch. If the solution is to be a qualified target solution batch, reagents, such as water, sulfuric acid, [ ]PROP/ECI are added to the tank to adjust solution properties within the constraints specified by the Target Solution Qualification Program, as described in Section 4a2.2. Makeup solution is adjusted by operators as needed to

ensure the batch already in a TSSS tank will meet the Target Solution Qualification Program requirements once the makeup solution is added.

Agitation of the target solution preparation tank is provided to ensure the solutions are well-mixed before samples are taken and before they are pumped to the TSSS. RVZ1 provides ventilation for the target solution preparation tank. HEPA filters at the target solution preparation tank minimize contamination of the ventilation system.

4b.4.2.3 Unirradiated SNM Related Equipment

The following is a list of process equipment associated with processing unirradiated SNM. System components meet the criticality safety controls determined in the nuclear criticality safety evaluations described in Section 6b.3. Nominal sizes and specifications are provided below:

a. URSS glovebox
   - Quantity: 1
   - Design guidance: AGS-G001-2007 (AGS, 2007)

b. Uranium oxidation furnace
   - Quantity: 1
   - Normal operating temperature: 482°F-1832°F (250°C-1000°C)

c. Uranium storage racks
   - Capacity: 80 canisters

d. Uranium metal storage canister
   - Description: Storage of uranium metal
   - Content administratively controlled to less than 14.7 lbs. (6.70 kg)

e. Uranium oxide storage canister
   - Description: Storage of uranium oxide
   - Content administratively controlled to less than 8.8 lbs. (4.0 kg)

f. TSPS glovebox
   - Quantity: 1
   - Design guidance: AGS-G001-2007 (AGS, 2007)

g. Uranyl sulfate dissolution tank
   - Quantity: 2
   - Size: 5.3 gal. (20 l)
   - Normal operating pressure: atmospheric (vented)

h. Target solution preparation tank
   - Quantity: 1
   - Size: [ ]PROP/ECI
   - Normal operating pressure: atmospheric (vented)

i. Uranyl sulfate dissolution tank filter
   - Quantity: 2

4b.4.2.4 Hazardous Chemicals

Uranium is used in URSS. The URSS is equipped with a glovebox in which handling of uranium within the system is performed. The URSS glovebox is kept at a negative pressure, has HEPA filters on the supply and exhaust connections, and is ventilated by RVZ1 to minimize operator exposure to uranium. No other hazardous chemicals are used in URSS.

Processes in TSPS use uranium oxide, sulfuric acid, and hydrogen peroxide. Uranium oxide handling is performed within the TSPS glovebox, which is kept at a negative pressure, has HEPA filters on the supply and exhaust connections, and is ventilated by RVZ1 to minimize operator exposure to uranium. Liquid processes are completed in a closed system ventilated by RVZ1 to minimize operator exposure to any evolved gases.

SHINE has chemical inventory controls including separation of chemicals based on the potential for adverse reactions. Process chemicals are prepared within well-ventilated areas.

4b.4.2.5 Criticality Control Features

Processes of unirradiated SNM prevents inadvertent criticality through passive engineered features such as favorable geometry equipment, and administrative controls. A detailed description of criticality safety is provided in Section 6b.3.

4b.4.2.6 Shielding and Radiological Protection

The URSS and TSPS operations are completed within gloveboxes and closed tanks with ventilation isolated from operators. The PFBS is described in Section 4b.2. The criticality accident alarm system is described in Subsection 6b.3.3.

4b.4.2.7 Technical Specifications

Certain material in this section provides information that is used in the technical specifications. This includes limiting conditions for operation, setpoints, design features, and means for accomplishing surveillances. In addition, significant material is also applicable to, and may be used for, the bases that are described in the technical specifications.

Table 4b.4-1 – Special Nuclear Material Maximum Inventory in the Main Production Facility (Approximate)

Chemical Form[a]	Physical Form	Inventory[b]
Uranium metal	Solid	1030 lb. (470 kg)
Uranium oxide	Powder	310 lb. (140 kg)
Uranyl sulfate	Aqueous	4770 lb. (2170 kg)
Uranyl sulfate	Solidified	16 lb. (8 kg)
Plutonium	Aqueous, solidified	4.08 lb. (1.85 kg)
Highly enriched uranium in fission chambers	Solid	0.55 lb. (0.25 kg)

a) Uranium is low enriched uranium (LEU), unless otherwise noted.
b) Inventory mass does not include the water mass for aqueous solutions.

Table 4b.4-2 – Physical and Chemical Forms of SNM within RPF Processes

Process Stage	Physical Form	Chemical Form	Process Location
Uranium receipt	Solid	Uranium metal Uranium oxide	[ ]SRI
Solid storage	Solid	Uranium metal Uranium oxide	Uranium receipt and storage system (URSS) storage racks
Uranium oxidation	Solid	Uranium metal Uranium oxide	URSS glovebox
Uranium dissolution	Solid	Uranium oxide	Target solution preparation system (TSPS) glovebox Uranyl sulfate dissolution tanks
Uranium dissolution	Slurry	Uranyl peroxide	Uranyl sulfate dissolution tanks
Uranium dissolution	Aqueous	Uranyl sulfate	Uranyl sulfate dissolution tanks
Target solution preparation	Aqueous	Uranyl sulfate	Target solution preparation tank
Irradiated target solution	Aqueous	Uranyl sulfate Plutonium	Molybdenum extraction and purification system (MEPS) Iodine and xenon purification and packaging (IXP) system Target solution staging system (TSSS) tanks Vacuum transfer system (VTS)
Spent target solution	Aqueous	Uranyl sulfate Plutonium	Radioactive liquid waste system (RLWS) tanks
Immobilization	Aqueous	Uranyl sulfate Plutonium	Radioactive liquid waste immobilization (RLWI) tank
Immobilization	Solid	Uranyl (solidified) Plutonium (solidified)	Waste drums

Table 4b.4-3 – TSSS Interfaces

Interfacing System	Interface Description
Molybdenum extraction and purification system (MEPS)	The TSSS receives solutions from MEPS.
Target solution preparation system (TSPS)	The TSSS receives target solution, makeup solution, sulfuric acid, or water from the TSPS.
Iodine and xenon purification and packaging (IXP)	The TSSS receives solution from IXP.
Vacuum transfer system (VTS)	Solutions are transferred from the TSSS via VTS.
Process vessel vent system (PVVS)	The TSSS tanks are ventilated by the PVVS for evolved radiolytic hydrogen and radiological gases.
Radioactive drain system (RDS)	The TSSS tanks have overflow connections to the RDS.
Production facility biological shield (PFBS)	The TSSS tanks are located in shielded below-grade vaults that are part of PFBS.
Normal electrical power supply system (NPSS)	TSSS equipment is supplied electric power from the NPSS.
Facility nitrogen handling system (FNHS)	The FNHS provides a nitrogen gas supply for liquid level detectors for the target solution hold tanks and target solution storage tanks. The TSSS tanks are agitated by the FNHS.
Nitrogen purge system (N2PS)	The N2PS provides ventilation to the TSSS tanks in the event of a loss of PVVS. The N2PS ventilates the TSSS via PVVS piping.
Process integrated control system (PICS)	PICS allows operators to monitor TSSS parameters.

Table 4b.4-4 – TSPS Hazardous Chemicals Inventory (Approximate)

Chemical	Quantity Per TSPS Dissolution Batch
Sulfuric Acid	1 liter, 96 percent wt.
Hydrogen Peroxide	4 liters, 30 percent wt.

Table 4b.4-5 – URSS Interfaces

Interfacing System	Interface Description
Target solution preparation system (TSPS)	Uranium oxide storage canisters are transferred from the uranium oxide storage rack to the TSPS glovebox.
Radiological ventilation zone 1 (RVZ1)	RVZ1 provides exhaust ventilation to the URSS glovebox.
Radiological ventilation zone 2 (RVZ2)	The URSS glovebox ventilation supply is taken from RVZ2.
Solid radioactive waste packaging (SRWP)	Spent SNM containers and URSS glovebox filters are processed by SRWP for disposal.
Normal electrical power supply system (NPSS)	The NPSS is distributed to provide power within the URSS glovebox, the oxidation furnace, and ancillary equipment.
Process integrated control system (PICS)	The URSS provide measurement signals to the PICS. The PICS allows operators to control processes in the URSS.

Table 4b.4-6 – TSPS Interfaces

Interfacing System	Interface Description
Uranium receipt and storage system (URSS)	Uranium oxide storage canisters are transferred from the uranium oxide storage rack to the TSPS glovebox.
Target solution staging system (TSSS)	Uranyl sulfate solutions are pumped from the target solution preparation tank to the target solution hold tanks.
Facility chemical reagent system (FCRS)	The chemical reagent system supplies reagents to the uranyl sulfate dissolution tanks for the conversion of uranium oxide to uranyl sulfate solution as well as reagents for adjustment of solutions in the TSPS.
Solid radioactive waste packaging (SRWP)	Spent TSPS glovebox filters and spent liquid filters are processed by SRWP system.
Radioisotope process facility cooling system (RPCS)	The RPCS provides process cooling water to the reflux condensers on the uranyl sulfate dissolution tanks.
Radiological ventilation zone 1 (RVZ1)	RVZ1 provides exhaust ventilation to the TSPS glovebox, the uranyl sulfate dissolution tanks, and the target solution preparation tank.
Radiological ventilation zone 2 (RVZ2)	The ventilation supply for the TSPS glovebox, the uranyl sulfate dissolution tanks, and the target solution preparation tank is taken from RVZ2.
Normal electrical power supply system (NPSS)	The NPSS is distributed to provide power to the TSPS glovebox, to operate the pumps, heating elements, and ancillary equipment.
Engineered safety features actuation system (ESFAS)	The ESFAS actuates isolation functions on detection of high dissolution tank level.
Process integrated control system (PICS)	The TSPS provides measurement signals to the PICS. PICS allows operators to control processes in TSPS.

Figure 4b.4-1 – Target Solution Storage System Process Flow Diagram

Figure 4b.4-2 – Uranium Receipt and Storage System Process Flow Diagram

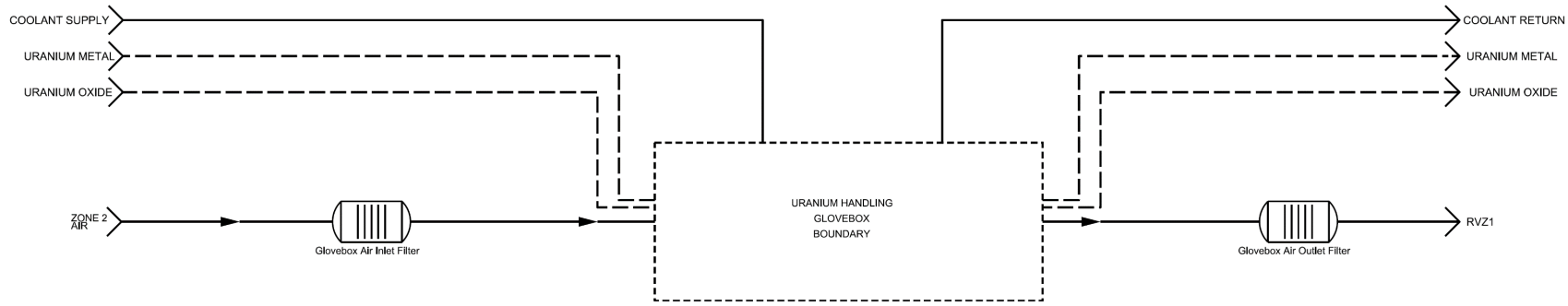

Figure 4b.4-3 – Target Solution Preparation System Process Flow Diagram (Sheet 1 of 2)

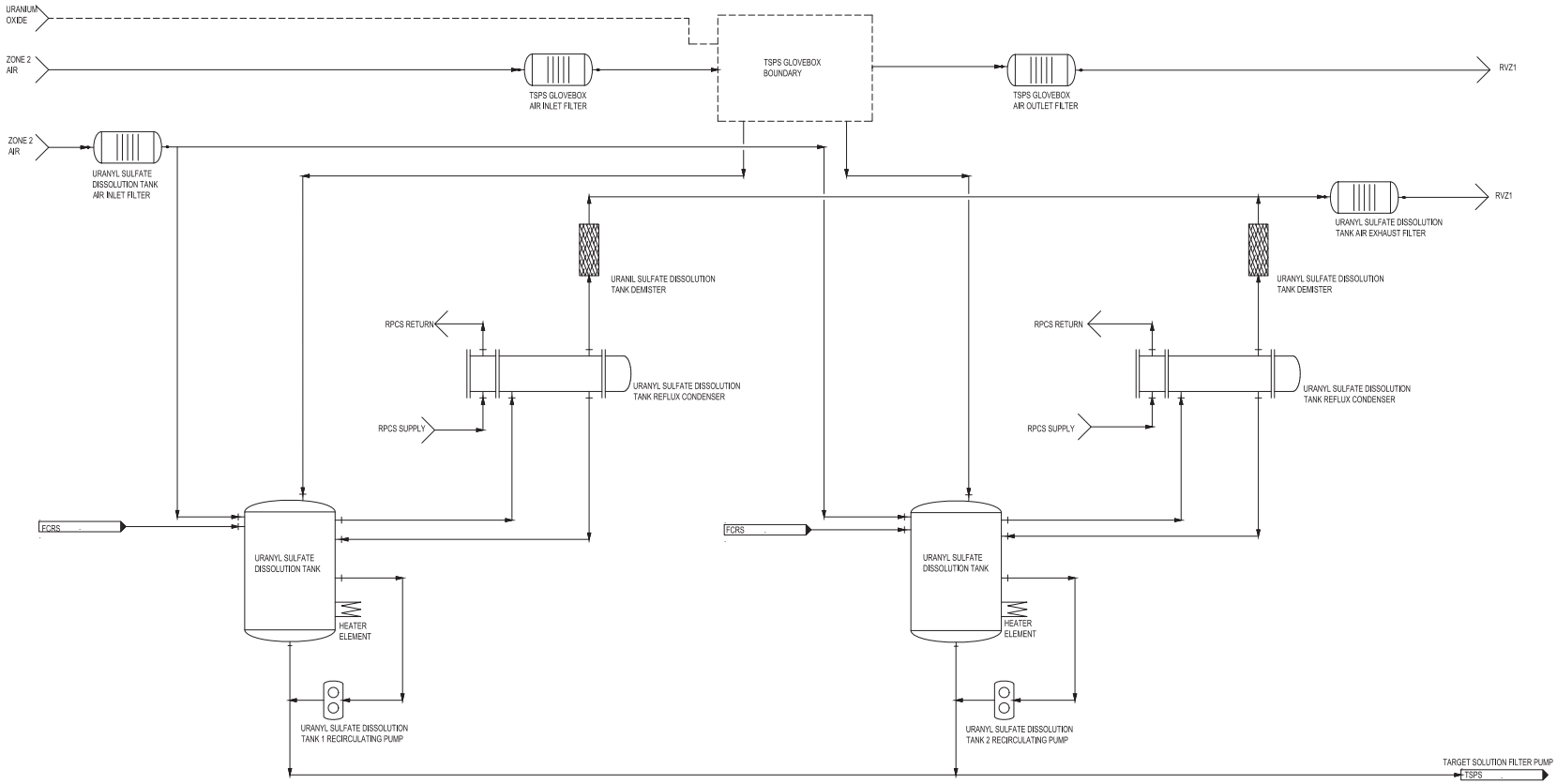

Figure 4b.4-3 – Target Solution Preparation System Process Flow Diagram
(Sheet 2 of 2)

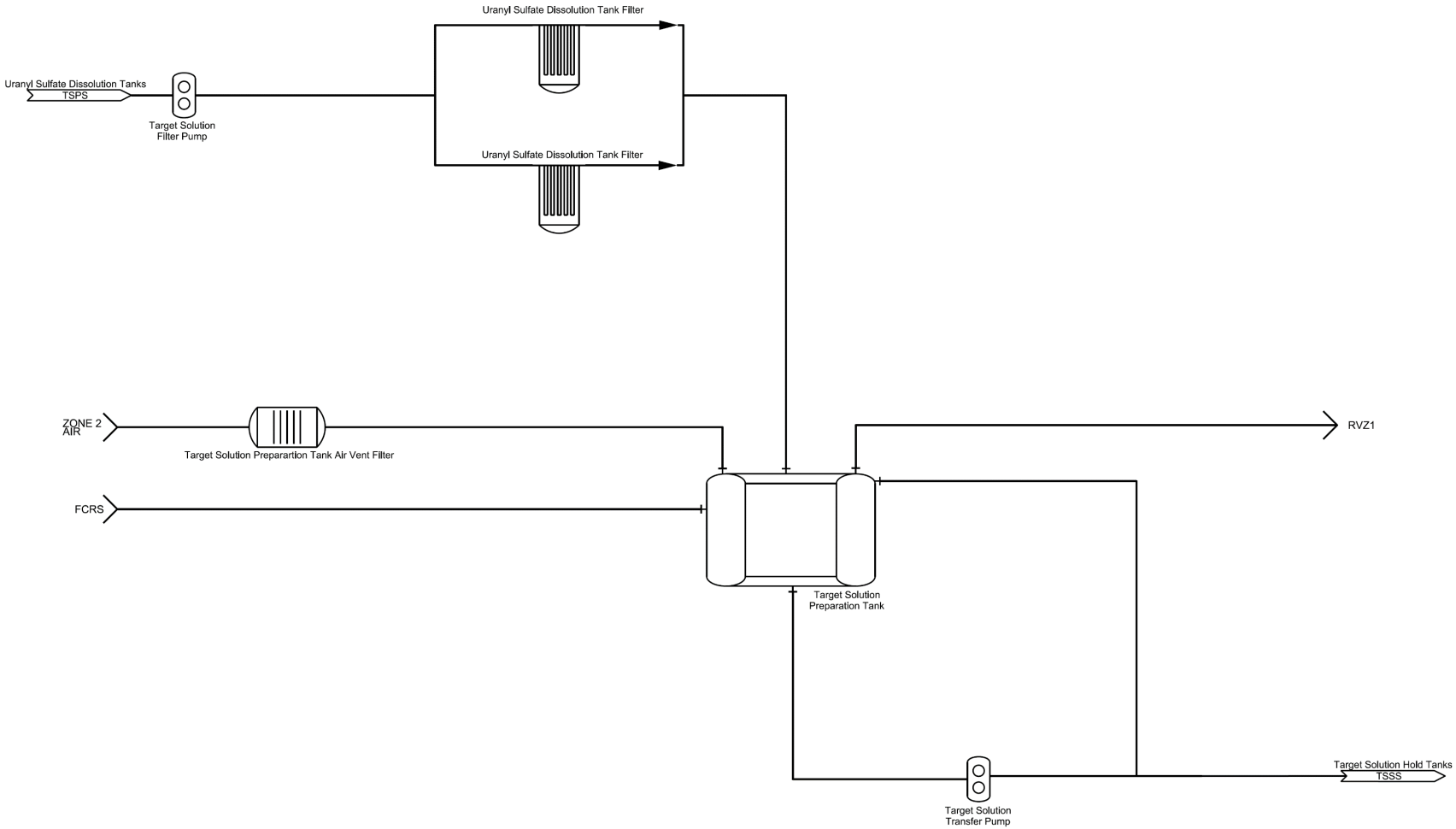

4b.5 REFERENCES

ACI, 2007. Code Requirements for Nuclear Safety-Related Concrete Structures and Commentary, ACI 349-06, American Concrete Institute, 2007.

ACI, 2008. Building Code Requirements for Structural Concrete and Commentary, ACI 318-08, American Concrete Institute, 2008.

ACI, 2014. Code Requirements for Nuclear Safety-Related Concrete Structures and Commentary, ACI 349-13, American Concrete Institute, 2014.

AGS, 2007. Guideline for Gloveboxes, AGS-G001-2007, American Glovebox Society, 2007.

ANL, 2016. Compendium of Phase-1 Mini-SHINE Experiments, ANL/NE-16/39, Argonne National Laboratory, 2016.

ANSI/ANS, 2006a. Nuclear Analysis and Design of Concrete Radiation Shielding for Nuclear Power Plants, ANSI/ANS 6.4-2006, American National Standards Institute, 2006.

ANSI/ANS, 2015. Program for Testing Radiation Shield in Light Water Reactors (LWR), ANSI/ANS 6.3.1-1987 (R2015), American National Standards Institute, 2015.

LANL, 2011. Monte Carlo N-Particle Transport Code MCNP5-1.60 Release & Verification, LA-UR-11-00230, Los Alamos National Laboratory, F.B. Brown, B.C. Kiedrowski, J.S. Bull, M.A. Gonzales, N.A. Gibson, 2011.

USNRC, 2001. Safety-Related Concrete Structures for Nuclear Power Plants (Other Than Reactor Vessels and Containments), Regulatory Guide 1.142, Revision 2, U.S. Nuclear Regulatory Commission, November 2001.

USNRC, 2009. Concrete Radiation Shields and Generic Shield Testing for Nuclear Power Plants, Regulatory Guide 1.69, Revision 1, U.S. Nuclear Regulatory Commission, 2009.

USNRC, 2013. A Review of the Effects of Radiation on Microstructure and Properties of Concretes Used in Nuclear Power Plants, NUREG/CR-7171, U.S. Nuclear Regulatory Commission, 2013.