MIT NUCLEAR REACTOR LABORATORY

AN MIT INTERDEPARTMENTAL CENTER

Edward Lau
Assistant Director
Reactor Operations

Mail Stop: NW12-116A
138 Albany Street
Cambridge, MA 02139

Phone: 617 253-4211
Fax: 617 324-0042
Email: eslau@mit.edu

2 March 2021

U.S. Nuclear Regulatory Commission
Washington, D.C. 20555

Attn.: Document Control Desk

Subject: License Amendment Request regarding Emergency Battery Surveillances in Technical Specification 4.6, Docket No. 50-20, License R-37

The Massachusetts Institute of Technology Nuclear Reactor Laboratory (NRL) hereby submits a License Amendment Request (LAR) for its Facility Operating License No. R-37. The NRL plans to upgrade the batteries in the reactor's emergency electrical power systems from flooded lead-acid batteries to absorbent glass mat (AGM) valve-regulated lead-acid (VRLA) batteries.

The NRL proposes a corresponding modification to reactor Technical Specification 4.6, updating the emergency battery surveillance requirements to be appropriate for use with the AGM VRLA batteries. The basis and safety evaluation for this LAR are detailed in the enclosed Safety Review #2020-32 "Emergency Battery Surveillances in TS 4.6".

The updated surveillance requirements ensure that the new batteries will meet all Technical Specification 3.6 requirements to provide emergency electrical power to operate the reactor equipment listed in Table 3.6-1 for at least one hour following a loss of normal electrical power to the reactor facility. This update has been reviewed and approved by the MIT Reactor Safeguards Committee.

A020
NRR

Sincerely,

Edward S. Lau, NE
Assistant Director of Reactor Operations
MIT Research Reactor

I declare under penalty of perjury that the foregoing is true and correct.

Executed on 03/02/2021
Date

Signature

EL/t

Enclosure: As stated

cc: USNRC – Senior Project Manager
Research and Test Reactors Licensing Branch
Division of Licensing Projects
Office of Nuclear Reactor Regulation

USNRC – Senior Reactor Inspector
Research and Test Reactors Oversight Branch
Division of Licensing Projects
Office of Nuclear Reactor Regulation

Safety Review #2020-32 – Emergency Battery Surveillances in TS 4.6

Description of Change

The sixty battery cells of the reactor emergency power system's battery bank will be replaced by an improved type of batteries. The existing batteries are lead-acid type, flooded with liquid sulfuric acid as the electrolyte. The proposed new batteries are also lead-acid type, but use no free-flowing electrolyte. Instead, their sulfuric acid electrolyte is absorbed into a very fine fiberglass mat, known as absorbent glass mat (AGM), making the battery non-spillable. Battery cells of this type are sealed.

Compared to the flooded lead-acid cells, AGM cells offer lower internal resistance and faster charging times. They have better electrical reliability, delivering high currents on demand and offering a longer service life, capable of repeated deep cycle to as much as 80% discharged. The battery stands up well to low temperatures, and has a low self-discharge characteristic when not in use. Even under prolonged periods of a low state-of-charge, AGM batteries are less prone to sulfation, that is, amorphous lead sulfate converting to a stable crystalline form and depositing onto the negative electrode plates, leading to development of large crystals and depleting the battery's performance. AGM cells are lighter than their flooded counterparts. The technology has been in proven applications since the early 1980s as a sealed lead-acid battery for military aircraft, vehicles and UPS to reduce weight and improve reliability.

The existing battery cells, and the proposed ones, are both manufactured by C&D Technologies. The proposed battery cells are the "msEndur II" series, model AT-15P, standard version with 2 VDC per cell. They are designed for a performance life of 20 years (7 years full warranty, with 20 years prorated warranty). See Figure 1 and Figure 2 photos of the batteries.

Each AT-15P cell is rated at 840 ampere-hours (Ah) for an eight-hour discharge time duration, thus providing a discharge current of 105 A for eight hours, down to 1.75 volts per cell. By comparison, the existing battery cells are rated at 577 Ah for an eight-hour discharge, with a discharge current of 72 A for the eight hours, to 1.75 VDC per cell. Alternatively, according to the manufacturer's Rating Table (enclosed), a one-hour discharge to 1.75 VDC per cell provides 454 A. By comparison, the one-hour discharge to 1.75 VDC per cell for the existing battery system is rated at 298 A.

The cells are designed for industrial, stationary application, and are constructed with lead-calcium alloy grids, using sulfuric acid as electrolyte in AGM form, and enclosed in a flame-retardant thermoplastic container. They are characterized as Valve-Regulated Lead-Acid (VRLA) cells. Each cell is equipped with an assembly (flash arrestor and pressure relief valve) that seals the cells during normal charge and operation but allows safe venting of hydrogen and oxygen gases if the cells are subjected to excessive overcharge voltage. All lead-acid batteries, including the msEndur II cells, are capable of generating excessive

hydrogen and oxygen gases under prolonged charging at voltages that are higher than the initial or equalizing charge. The valve assembly is a safety feature, and therefore must not be removed from the cells.

According to the battery manufacturer, the electrolyte in a sealed AGM cell pack will have a stable and consistent specific gravity, so measurement of the batteries' specific gravity is not needed. C&D Technologies' "Installation and Operating Manual", section 9 "Maintenance", states that the msEndur II cell "does not require water addition and no specific gravities or water levels need to be checked throughout its life". According to IEEE 1188a-2014 (Amendment 1 to IEEE 1188-2005 "Recommended Practice for Maintenance, Testing, and Replacement of VRLA Batteries for Stationary Applications") Annex C.8.1, the cells are all sealed to prevent oxygen from entering; otherwise, oxygen from outside air will oxidize the negative electrode plate, degrading the cell's performance. With the cells sealed, there is no access for measurement of specific gravity of the sulfuric acid electrolyte. Measurement of cell voltage is the best way to assess the condition of an AGM battery.

Modification of the reactor's Technical Specification (TS) 4.6 Emergency Electrical Power Systems is therefore proposed to remove the requirement for periodic measurement of specific gravity of the battery cells. The state-of-charge assessment will be done by measurement of voltage of each cell semi-annually, per the battery manufacturer's maintenance recommendations. At any time that a significant change is noted such as a severe discharge, overcharge, or extremely high or low ambient temperature, the voltage of each cell will be measured to assure that the battery has not been damaged. See enclosed final- and markup-version pages for the proposed modifications to TS 4.6.

Figure 1 – Battery Inspection and Initial Setup

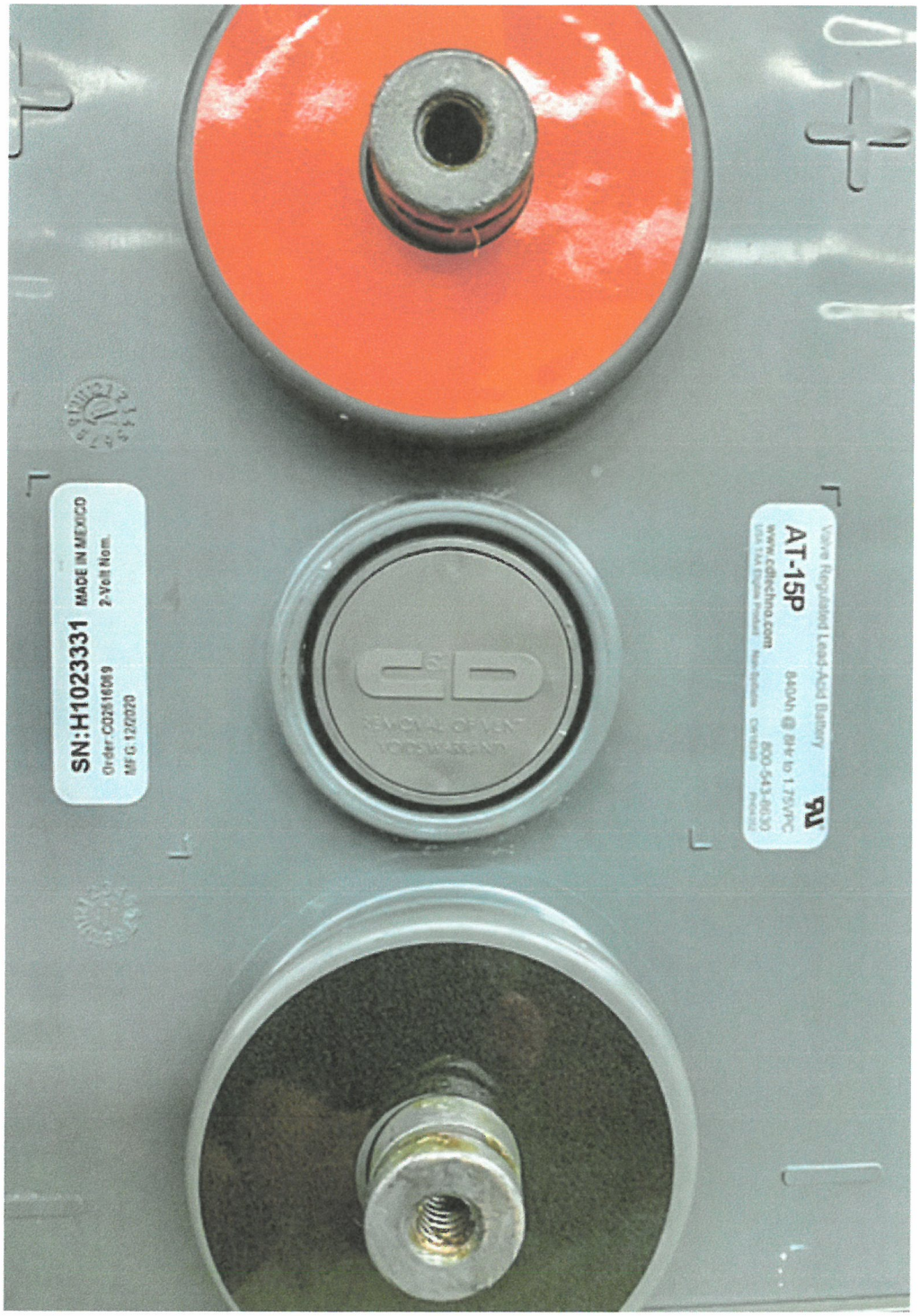

Figure 2 – Front of a Battery Cell, with Specification Stickers

Discussion of Proposed Changes in Technical Specification 4.6

The following provides discussion on each of the items in the proposed modifications to reactor Technical Specification (TS) 4.6, Emergency Electrical Power Systems.

(1) "The temperature of the negative terminal on each battery cell shall be measured quarterly." This new measurement is a recommendation from the battery manufacturer. – See enclosed C&D Technologies "Installation and Operating Manual" for msEndur II Valve-Regulated Lead Acid Batteries, page 24, "Part 9 – Maintenance", item 5, "Measure and record the temperature of the negative terminal on each cell." C&D recommends that the battery be operated at 77 F (25 C) ± 10 F (5.5 C). The two new battery racks, with 30 battery cells each, will be installed and operated indoors in the reactor's Utility Room NW12-100D, external to but immediately adjacent to the containment building, where the room (ambient) temperature is maintained within the recommended operating temperature. The negative terminal best represents the operating temperature of the battery, because it is connected to a lead anode, which has higher thermal conductivity than the calcium cathode.

C&D states that if the battery is operated at temperatures far below the recommended range, the capacity will be reduced. While lower operating temperatures reduce battery performance, higher temperatures improve performance but reduce battery service life as elevated operating temperatures accelerate the electrochemical reaction within the lead-acid battery. Additionally, significant cell temperature deviations during a single inspection can reveal incipient problems with individual cells.

(2) "The voltage of each battery cell shall be measured semi-annually." The specific gravity requirement is removed, as C&D states that no specific gravities or water levels are to be checked throughout the battery life. The frequency of cell voltage measurement is decreased from quarterly to semi-annually based upon C&D Technologies "Installation and Operating Manual" for msEndur II Valve-Regulated Lead Acid Batteries, page 24, "Part 9 – Maintenance", item 6, "Measure and record the individual cell voltages," which is listed under "Semi-Annually".

(3) "The connector resistance at each battery cell shall be measured annually." This is a manufacturer recommendation in C&D Technologies "Installation and Operating Manual" for msEndur II Valve-Regulated Lead Acid Batteries, page 24, "Part 9 – Maintenance", item 9, which is listed under "Annually". While item 7 recommends, "Re-torque cell connector bolts to 125 in-lbs" annually, the manufacturer pointed out that the requirement was a holdover from flooded lead-acid batteries. For AT-15P cells, the manufacturer prefers the connector resistance measurement, followed by checking the connector bolt torque if a resistance is out of range.

(4) "A discharge test shall be performed once every two years." This item is unchanged except for being renumbered to maintain sequential numbering. The test performed at the MIT reactor discharges the batteries for one hour, matching their expected duty cycle of one hour, per IEEE 1188-2005 Section 6.3 Performance, and Section 7.6 Service Test. The

manufacturer does not make a recommendation on discharge testing nor its frequency. ANSI/ANS 15.1-2007 Section 4.6.2 -1 "Emergency batteries" recommends a discharge test every five years. However, IEEE 1188-2005 Section 6.5 Performance states, "It is recommended that the performance test interval should not be greater than 25% of the expected service life or two years, whichever is less." This supports maintaining the discharge test frequency at once every two years.

(5) "Operability of the inverter motor-generator set and associated switches shall be verified annually. Performance of a discharge test satisfies this requirement." This item is unchanged except for being renumbered to maintain sequential numbering. As a service test, the operability of the inverter motor-generator set and associated switches will continue to be verified annually.

The Basis of TS 4.6 is updated correspondingly to include manufacturer's recommendations. Additionally, a typographical error is corrected in the Basis, changing "ANSI/ANSI-15.1-2007" to "ANSI/ANS-15.1-2007".

Sizing of the New Batteries

The MIT Reactor periodically performs a discharge test (PM 6.1.3.10 Emergency Battery Discharge Test) on its emergency battery system. This test also measures the total battery current input to the motor-generator (M-G) set and to the building's hard-wired emergency lights. It is important to note that the equipment on emergency power is not limited to the items listed in TS Table 3.6-1 "Minimum Equipment to be Supplied by Emergency Electrical Power". Typically, the additional equipment includes the reflector coolant system's auxiliary pump DM-2 and the shield coolant system's main pump PM-1. Some reactor experiments at the time of the tests would also receive emergency power.

On average, the total battery current output during a loss of off-site electrical power is between 50 and 60 amperes.

Date & Test Type	M-G Input (amps)	Bldg. Lighting (amps)	Total Battery Output (amps)	Battery Voltage (volts)
2020-06-30 Discharge	36	16	52	121
2018-07-23 Discharge	38	18	56	121
2016-07-05 Discharge	40	19.5	59.5	121
2014-06-30 Discharge	39	17	56	121

MIT provided battery manufacturer C&D Technologies the design criteria of 60 cells at 2 VDC per cell connected in series to discharge 57 A for 8 hours. For 60 AT-15P battery cells, at 2 VDC each, discharging at a rate of 57 A, the manufacturer estimates that it would take 16 hours 5 minutes for the batteries to drop to 1.75 VDC. See manufacturer's Rating Table (enclosed, as mentioned earlier). If the discharge rate were to double to ~120 A, it would take the batteries about 7 hours to drop to 1.75 VDC.

The existing lead-acid battery bank, as described in SAR Section 8.2.2 System Description, is rated for 577 ampere-hours at an 8-hour discharge time duration, thus providing a battery capacity of 72 A for 8 hours. Its one-hour discharge to 1.75 VDC per cell is rated at 298 A. Therefore, the proposed AT-15P battery system with 60 cells exceeds the capacity of the existing battery system by ~150%. The manufacturer estimates this as 133.88%, by incorporating average operating temperature at the design range of 77 F, 110% design growth, and a 125% aging factor.

The reactor's Technical Specification (TS) 3.6.1 "Emergency Power" states that emergency electrical power with the capacity to operate the equipment listed in Table 3.6-1 shall be available when the reactor is operating and shall be capable of operation for at least one hour following a loss of normal electrical power to the facility. Therefore, the sizing of the proposed new batteries ensures that it is capable of meeting the TS requirement with a generous margin.

Seismic Evaluation

The battery manufacturer (C&D Technologies) specifies that the AT-15P batteries mounted in their racks, 30 cells per rack, each assembly weighing ~4,200 lbs., are designed to exceed 1997 Uniform Building Code (UBC) Zone 4 seismic requirements when installed at or below grade. See Figure 3 U.S. Seismic Zones Map (NRC ADAMS ML 15131A128).

The two battery racks will be floor-mounted at grade level according to manufacturer instructions, using structural steel bolts of at least 5/8" size that fit through the eight 0.81" bolt openings, with four on each side of the rack, into ~4" depth of solid concrete floor. See "Floor Mounting Detail" on enclosed C&D Technologies drawing #E1565060CE01 "Connection Diagram 120V/125V 6x5 AT-15P", Rev. 0. According to the 1997 UBC Seismic Zone Map, Massachusetts is located in UBC Zone 2A, with peak ground acceleration of 0.15 g. The rack's design exceeds seismic protection requirements for UBC Zone 4 with peak ground acceleration of 0.4 g. The MIT Reactor Safety Analysis Report (SAR) Sections 2.5.3 through 2.5.6 provide discussion on seismicity at the reactor site. The SAR supports the use of 0.15 g as the maximum safe shutdown earthquake acceleration, but it then applies an amplification factor of 1.5 based upon soil at the reactor site as Class B for lateral force analysis. Upon application of the factor of 1.5, the SAR adjusted the maximum safe shutdown earthquake acceleration to 0.225 g. This ground acceleration is still well below that for UBC Zone 4.

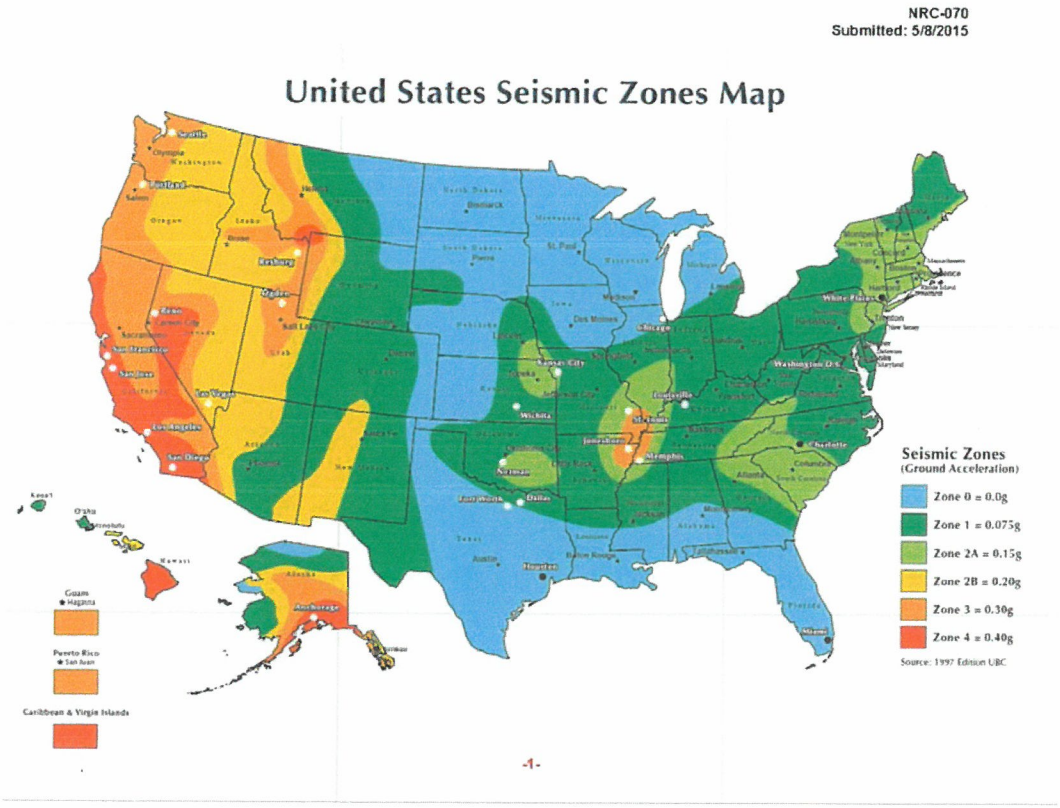

Figure 3 – UBC Seismic Zones

The battery manufacturer has not performed seismic tests directly on AT-15P battery assemblies. However, they have performed seismic compliance tests on a range of battery cells, from lighter and smaller, to larger and heavier, than the proposed AT-15P batteries. (See Figure 4.) The number before the "P" represents the number of plates assembled in the battery cell. The manufacturer has tested AT-09P, AT-21P, AT-29P and AT-39P battery cells, all AGM VRLA batteries, in racks of various configurations including 4 cells wide by 9 cells high. These tests subjected the batteries to a 2006 International Building Code (IBC) Earthquake Program that included package drop tests (per GR-63-CORE Section 5.3.1 requirements) and earthquake / office vibration tests (per GR-63-CORE Section 5.4.1 and 5.4.2, 2006 IBC 125% g, 200% g and 300% g requirements), at Wyle Laboratories, which is accredited by the American Association for Laboratory Accreditation (Certificate #845.02). These batteries were all found to be in compliance with all applicable Telcordia Network Equipment Building System (NEBS) GR-63-CORE Issue 3 (March 2006) seismic requirements and objectives, from UBC Zone 2 up to Zone 4 ground accelerations. See enclosed Executive Summaries for Wyle Reports #55308R08, #55590R08, and #55970R08, and the enclosed UBC Zone 4 Certification letter for C&D msEndur II ATP/ATLP modular battery systems.

Figure 4 – Acceleration Platform with Eight-High Stack of AT-39P Batteries

Safety Evaluation

General personnel industrial safety is improved by this update because of the use of non-spillable lead-acid batteries. Most importantly, measurement of specific gravity is no longer required with the use of AGM-type batteries, eliminating the sulfuric acid exposure risk to personnel using a hydrometer to perform periodic measurements of specific gravity. The new, manufacturer-recommended surveillances for battery terminal temperature and connector resistance involve only minor electrical risks that are more readily managed.

Reactor safety is maintained as the new batteries will continue to meet Technical Specification 3.6 requirements to provide emergency electrical power to operate reactor equipment listed in Table 3.6-1 for at least one hour following a loss of normal electrical power to the reactor facility, with satisfactory capacity and margin. Sizing of the batteries provided generous margin of capacity such that the batteries would supply emergency electrical power up to 16 hours for an expected load of 57 amperes.

The new battery cells are designed and constructed to be in compliance with NEBS GR-63-CORE Issue 3 (March 2006) seismic requirements and objectives, from UBC Zone 2 up to Zone 4 ground accelerations. Likewise, when they are mounted into their support racks at ground level, the assembly withstands in excess of 1997 Uniform Building Code (UBC) Zone 4 seismic requirements.

IEEE Standard 1188-2005 "Recommended Practice for Maintenance, Testing, and Replacement of VRLA Batteries for Stationary Applications" Section 5, Maintenance, uses measurements of all individual cell voltages as a primary means of assessment of battery performance. The C&D Technologies "Installation and Operating Manual" for msEndur II VRLA batteries also recommends that voltage of all cells shall be measured semi-annually. This surveillance frequency is within the range recommended by ANSI/ANS-15.1-2007 section 4.6.2(1). The discharge test for the new batteries will continue to be performed every two years, consistent with IEEE 1188-2005 Section 6.3 on performance testing.

Therefore, the proposed set of surveillance tests and frequency requirements will assure operability of the new batteries, with the degree of assurance expected to equal or exceed that provided by the existing battery surveillance requirements.

Renumbering within TS 4.6 has no effect other than to maintain sequential numbering, and thus has no effect on safety. Changing "ANSI/ANSI-15.1-2007" to "ANSI/ANS-15.1-2007" in the Technical Specification 3.6 Basis corrects a typographical error and likewise has no effect on safety.

Existing Technical Specification 3.6 "Emergency Power" does not specify the type of emergency battery cells and does not discuss methods of performance assessment. It therefore requires no modification.

Enclosures

1. msEndur II Rating Table
2. proposed Technical Specification 4.6 – final version
3. proposed Technical Specification 4.6 – showing markup
4. C&D Technologies msEndur II "Installation and Operating Manual" – introduction and maintenance pages
5. C&D Technologies drawing #E1565060CE01 "Connection Diagram 120V/125V 6x5 AT-15P", Rev. 0
6. Executive Summary of Wyle Report #55308R08
7. Executive Summary of Wyle Report #55590R08
8. Executive Summary of Wyle Report #55970R08
9. UBC Zone 4 Certification of C&D msEndur II ATP/ATLP modular battery systems

C&D TECHNOLOGIES, INC.
1400 UNION MEETING ROAD
BLUE BELL, PA 19422
(215) 619-2700
FAX: (215) 619-7840

Rating Table

msEndur II AT-P - amps
Final Voltage 1.75 volts per cell - at 77.00°F

Battery Model	1 min	1 hrs 0 min	2 hrs 0 min	3 hrs 0 min	4 hrs 0 min	5 hrs 0 min	6 hrs 0 min	7 hrs 0 min	8 hrs 0 min	9 hrs 0 min	10 hrs 0 min	11 hrs 0 min
AT-07P	396.6	189.3	122.71	92.55	74.84	63.02	54.53	48.1	43.06	38.98	35.63	32.81
AT-09P	529.7	259.3	170.15	128.73	104.19	87.78	75.95	66.99	59.96	54.28	49.6	45.67
AT-11P	662.1	324.1	212.69	160.91	130.24	109.72	94.94	83.74	74.95	67.85	62	57.09
AT-13P	737.7	352.1	228.24	172.14	139.2	117.23	101.42	89.47	80.08	72.51	66.26	61.02
AT-15P	927	453.7	297.77	225.27	182.34	153.61	132.91	117.24	104.93	95	86.8	79.93
AT-17P	1057.6	504.8	327.23	246.8	199.56	168.07	145.41	128.27	114.81	103.96	95	87.49
AT-19P	1191.9	583.4	382.85	289.63	234.43	197.5	170.88	150.73	134.91	122.14	111.6	102.76
AT-21P	1322	631.1	409.04	308.5	249.45	210.08	181.76	160.34	143.52	129.95	118.75	109.36
AT-23P	1456.7	713	467.92	353.99	286.53	241.38	208.86	184.23	164.89	149.28	136.41	125.6
AT-25P	1586.4	757.3	490.84	370.2	299.34	252.1	218.12	192.4	172.22	155.93	142.5	131.23
AT-27P	1721.6	842.6	553	418.36	338.62	285.27	246.83	217.72	194.87	176.42	161.21	148.44
AT-29P	1850.8	883.5	572.65	431.9	349.24	294.11	254.47	224.47	200.92	181.92	166.25	153.1
AT-35P		1101.9	723.15	547.08	442.82	373.05	322.78	284.72	254.83	230.71	210.81	194.11
AT-39P		1199	777.17	586.14	473.96	399.16	345.35	304.64	272.68	246.9	225.63	207.78

4.6 Emergency Electrical Power Systems

Applicability

This specification applies to the surveillance of the emergency electrical power supply.

Objective

To ensure that the emergency electrical power supply is maintained and tested in accordance with accepted standards.

Specification

1. The temperature of the negative terminal on each battery cell shall be measured quarterly.

2. The voltage of each battery cell shall be measured semi-annually.

3. The connector resistance at each battery cell shall be measured annually.

4. A discharge test shall be performed once every two years.

5. Operability of the inverter motor-generator set and associated switches shall be verified annually. Performance of a discharge test satisfies this requirement.

Basis

The emergency electrical power system consists of batteries, an inverter motor-generator set, and the switches necessary to tie into the normal electrical distribution system.

Voltage measurements of individual battery cells are the accepted method of ensuring that the batteries are in satisfactory condition. In addition, periodic discharge tests are performed to detect deterioration of cells. To ensure the operability of the inverter motor-generator set, the generator and associated switches will be operationally tested.

The frequency of these component tests is based on manufacturer recommendations and on standard practice as recommended in ANSI/ANS-15.1-2007. Specific gravity measurements are not needed for lead-acid battery cells that use no free-flowing electrolyte. The discharge test frequency is biennial rather than every five years.

4.6 Emergency Electrical Power Systems

Applicability

This specification applies to the surveillance of the emergency electrical power supply.

Objective

To ensure that the emergency electrical power supply is maintained and tested in accordance with accepted standards.

Specification

1. The temperature of the negative terminal~~voltage and specific gravity of the pilot~~ on each battery cell shall be measured quarterly.

2. The ~~specific gravity~~voltage of ~~all batteries~~ each battery cell shall be measured semi-annually~~at any time that a significant change is noted in the pilot cell and at least every two years~~.

3. The connector resistance at each battery cell shall be measured annually.

4~~3~~. A discharge test shall be performed once every two years.

5~~4~~. Operability of the inverter motor-generator set and associated switches shall be verified annually. Performance of a discharge test satisfies this requirement.

Basis

The emergency electrical power system consists of batteries, an inverter motor-generator set, and the switches necessary to tie into the normal electrical distribution system. ~~Specific gravity and v~~Voltage measurements of individual battery cells are the accepted method of ensuring that the batteries are in satisfactory condition. In addition, periodic discharge tests are performed to detect deterioration of cells. To ensure the operability of the inverter motor-generator set, the generator and associated switches will be operationally tested.

The frequency of these component tests is based on manufacturer recommendations and~~are based on experience to date with the MITR-II and~~ on standard practice as recommended in ANSI/ANS~~I~~-15.1-2007. Specific gravity measurements are not needed for lead-acid battery cells that use no free-flowing electrolyte. ~~Where appropriate, the latter has been modified by the manufacturer's recommendations. Thus, t~~The discharge test frequency is biennial rather than every five years.

C&D TECHNOLOGIES, INC.
Power Solutions

m·s· endur II

Valve-Regulated Lead Acid Batteries

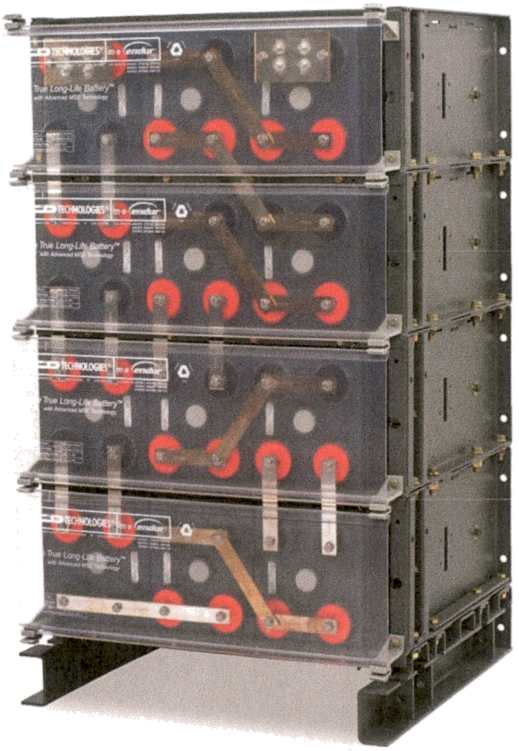

Installation and Operating Manual

SAFETY PRECAUTIONS

Only authorized and trained personnel familiar with battery installation, preparation, charging, and maintenance should be permitted access to the battery.

WARNING

SHOCK HAZARD – Do not touch un-insulated battery, connectors, or terminals. Be sure to discharge static electricity from tools and technician by touching a grounded surface near the batteries, but away from the cells and flame arresters. All tools should be adequately insulated to avoid the possibility of shorting connections. Do not lay tools on the top of the battery.

Although msEndur II batteries are sealed and emit no gas during normal operation, they contain potentially explosive gases, which may be released under abnormal operating conditions, such as a charger malfunction. It is the responsibility of the customer to provide adequate ventilation so hydrogen gas accumulation in the battery area does not exceed two percent by volume. However, normal air circulation in a ventilated facility will preclude any hydrogen build-up even during equalize charging. Never install batteries in a sealed cabinet or enclosure. If you have any questions, contact your local C&D representative.

This battery contains sulfuric acid, which can cause severe burns. In case of skin contact with electrolyte, remove contaminated clothing and flush affected areas thoroughly with water. If eye contact has occurred, flush for a minimum of 15 minutes with large amounts of running water and seek immediate medical attention.

IMPORTANT

Follow instructions contained in this manual when installing, charging, and servicing batteries

For Additional Information Contact:
C&D Technologies, Inc.
Technical Service Department
1400 Union Meeting Road
P.O. Box 3053
Blue Bell, PA 19422-0858
Telephone 800-543-8630 FAX 215-619-7899
customersvc@cdtechno.com

Or check C&D's website **www.cdtechno.com**

NOTE
This manual is to be used for the installation and operating of C&D's msEndur II series of batteries.

WARRANTY NOTICE

This instruction manual is not a warranty. Each standby battery is sold subject to a limited warranty, which is in place of all other warranties, express or implied (including the warranties of merchantability or fitness for a particular purpose) and which limits a purchaser's (user's) remedy to the repair or replacement of a defective battery or parts thereof. The terms of the limited warranty are incorporated herein or a written copy is provided within the shipping materials

Table of Contents

Part 1: Introduction 5
1.1 Cell Characteristics 5
Part 2 – Recommended Technical References 6
Part 3 – Safety Precautions 7
3.1 Recommended Tools 7
3.2 Personnel Protection Equipment (Safety) 7
3.3 Installation Tools and Supplies 8
Part 4 - Receiving 8
4.1 Inspection at Time of Delivery 8
4.2 Damage and Shortage Situations 8
Part 5 – Storage Prior to Installation 9
5.1 Storage Conditions 9
5.2 Storage Temperature and Duration 9
Part 6 - Installation 9
6.1 Locating Battery System 9
6.2 Ventilation 10
6.3 Floor Loading and Anchoring 10
6.4 Spill Containment 10
6.5 Module Installation 11
6.5.1 Installation of Modules and Cells Together 11
6.5.2 Installation of Modules and Cells Separately 11
6.5.3 Cell Removal and Stack Disassembly 16
6.6 Electrical Connections 18
6.7 Terminal Plates 18
6.8 Numbering Cells 18
6.9 Interconnection 18
6.10 Tap Connections 19
Part 7 – Initial Charging 20
7.1 Initial Charge 21
7.1.1 Initial Charge – UPS Applications 21
7.2 Initial Charge Records 21
Part 8 – Battery Operation 22
8.1 Float Charging 22
8.2 Equalize or Freshening Charge 22
8.3 Temperature Effects on Batteries 23
Part 9 – Maintenance 24

9.1 Monthly Inspection 24
9.2 Quarterly (including the above) 24
9.3 Semi-Annually (including the above) 24
9.4 Annually (including the above) 24
9.5 Module Assembly Adjustments 25
9.6 Performance Tests 26
9.6a UPS Transfer Tests 26
Part 10 – Battery Degradation 27
10.1 General Information and Precautions 27
10.2 Float Versus Cycle Life 27
10.3 High Temperature Operation 27
10.4 Low Float Voltage and Sulfation 28
10.5 Hydration 28
10.6 Open Circuit – Late Installations 28
10.7 Parallel Battery Strings 28
Appendix A - Connections 29
A.1 Terminal Connections 29
A.2 Reworking Terminal Connections 29
Appendix B – Installation and Operation of Cam Assemblies 30
Appendix C Gap and Module Assembly Details 31
Appendix F – Recycling 35
Figure & Table Index 36

Part 1: Introduction

The msEndur II batteries referenced in this document are stationary, lead-acid batterles. They are constructed with an absorbent glass mat (AGM) and are characterized as Valve Regulated Lead-Acid (VRLA). As VRLA, there is no free flowing electrolyte. They are constructed with lead-calcium alloy grids, dilute sulfuric acid (electrolyte) enclosed in a flame retardant thermoplastic container with a safety vent and a flame arresting disk to prohibit a spark from entering the head space of the cell. This type of battery is nearly 100% recyclable. At the end of life, please dispose of properly or consult C&D for recycling information.

The msEndur II series of batteries are designed to provide reliable service life with minimal maintenance when used in accordance with this manual. They are a single cell unit producing a nominal two volts per cell, which are connected in series for the desired system voltage. The cells are housed in steel modules, coated with acid resistant paint. These modules come in varying widths, depending on the cell size and can be stacked up to eight modules high while maintaining their seismic ratings. The msEndur II series are to be installed in a horizontal position with all connections accessible from the front of the system assembly. These cells are not designed for operation in any other orientation.

The msEndur II is available in two different battery versions. The standard version has the series nomenclature of ATP for systems that can float between 2.25 to 2.30 volts per cell average. For systems where the msEndur II cells will be floated in parallel with flooded battery strings, the ATLP series should be set on float between 2.17 to 2.22 volts per cell average. Check with C&D to determine which ATP/ATLP model offers comparable float characteristics.

1.1 Cell Characteristics

Under normal float operation, msEndur II batteries can be installed in proximity to electronic equipment and in computer rooms with occupied space. However, if subjected to excessive overcharge voltage, hydrogen and oxygen can be vented into the atmosphere. Therefore, lead acid batteries should never be installed in an airtight enclosure. Sufficient precautions must be taken to prevent excessive overcharge and containment of potential explosive off gases. All Lead-Acid batteries, including msEndur II, are capable of generating excessive potentially explosive gases when charged for prolonged periods at voltages higher than initial or equalizing charge.

The msEndur II cells are equipped with a "flash arrestor and pressure relief valve" assembly that seals the cells during normal charge and operation but allows it to safely vent in case of overcharge. Removing the valve assembly can cause the release of potentially explosive gases and such action will void the warranty.

Part 9 – Maintenance

The msEndur II is a VRLA cell which does not require water addition and no specific gravities or water levels need to be checked throughout its life. However, it is recommended to properly follow the below maintenance procedure, this will assure that the batteries are well maintained and ready for operation when needed. A blank inspection report (RS-1992) is shown in Appendix E.

9.1 Monthly Inspection

1. Visual inspection of the battery for general appearance and connector conditions. Check for bulging jars, corrosion build up or any signs of heat damage to the jars/covers and connectors. Visually check cell spacing and cell side restraint plate gap as noted in Appendix C, Table 2.
2. Measure and record the total system float voltage.
3. Measure and record the total system float current.

9.2 Quarterly (including the above)

4. Optional; measure and record one of the following: conductance, impedance, resistance or internal resistance of each battery. Changes over time of less than ±20 % are acceptable, changes of greater than 50% require further attention (such as a load test).
5. Measure and record the temperature of the negative terminal on each cell.

9.3 Semi-Annually (including the above)

6. Measure and record the individual cell voltages.

9.4 Annually (including the above)

7. Re-torque cell connector bolts to 125in-lbs (14 N-m).
8. Any disassembled connections should be re-torqued to 160 in-lb (18 N-m).
9. Measure and record connector resistance reading. If a value exceeds the average by 10% for similar connections, see Appendix B and reference IEEE 1188 for more information.
10. If possible, measure and record the total and individual AC ripple current or voltage.
11. Clean products with a solution of 1 lb of sodium bicarbonate to 1 gallon of water, if necessary.

CAUTION:
Never use solvents to clean a battery system.
Only use a solution of water and sodium bicarbonate, 1 gallon to 1 lb.

For more information, IEEE 1188 discusses the significance of connection integrity, further maintenance techniques and testing information.

REVISION HISTORY								
ECN14079								
ZONE	REV	DESCRIPTION	ECN#	REV'D	CHK'D	DATE	APPROVED	

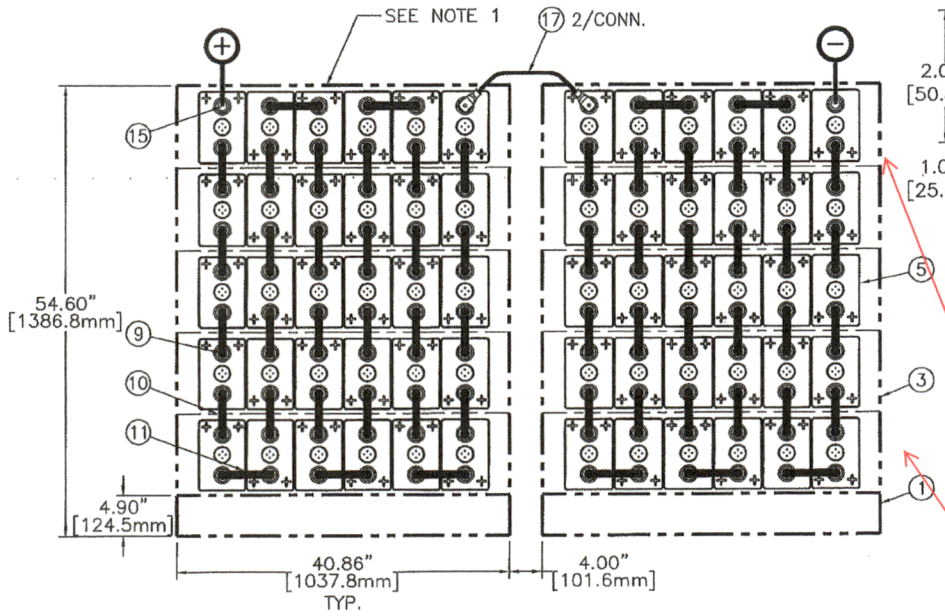

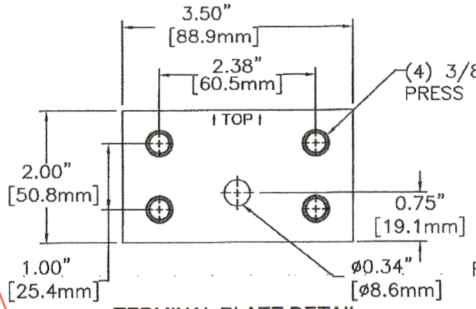

TERMINAL PLATE DETAIL
PART NO. PT00962T

120/125 VOLT SYSTEM
(60) AT-15P CELLS

APPROX. SYSTEM WEIGHT: 8,320 LBS. [3,773.9 kg.]
FLOOR CONTACT AREA: 148.50 SQ. IN. [95,806 mm²]

m-s-endur II

SYSTEM NO. E1565060CE01

ITEM	QTY	PART NO.	DESCRIPTION
20	1	RE04455-60	ACCESSORY KIT (J29537)
19			
18			
17	2	RA02250-21	4/0 CABLE 21" LONG
16			
15	2	PT00962T	TERMINAL PLATE (M15923)
14			
13			
12			
11	10	PK04276T	CONNECTOR 1.50 X 7.12 X 0.18
10	48	PK04097T	CONNECTOR 1.50 x 5.96 x 0.12
9	5	HDWR-R11	HARDWARE KIT, CONNECTOR
9.1	120	PB00327	BOLT, HEX 5/16-18 x 1.25 S.S
9.2	120	PH01700	WASHER, FLAT S.S.
8	10	PH04006-40	FACEPLATE (K11056)
7	12	HDWR-R13	HARDWARE KIT, FACEPLATE (J29535)
5	60	CW18349	CELL (N03375)
3	10	RD04496-40D	MODULE ASSEMBLY KIT (M14111)
1	2	RD04407-40A	BASE ASSEMBLY KIT (M14028)

E1565060JE01 with "J" Termination

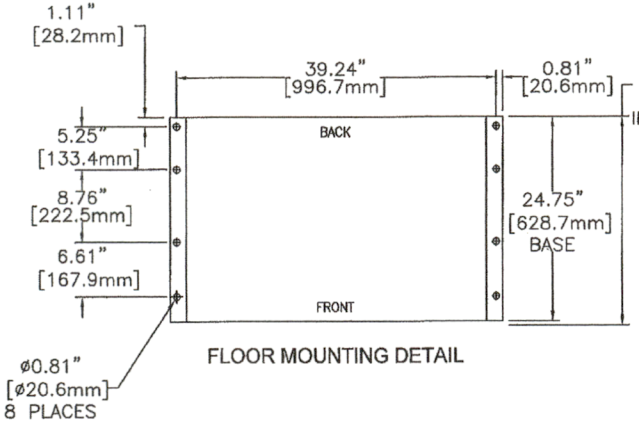

FLOOR MOUNTING DETAIL

NOTES:
1. LOCATE POLARITY OF BATTERIES FOR PROPER ORIENTATION DURING INSTALLATION.
2. FLOOR MOUNTING (ANCHOR) BOLTS ARE NOT FURNISHED.
3. INSTALLATION ANCHOR BOLT SIZE AND TYPE ARE TO BE DETERMINED BY USER IN ACCORDANCE WITH BUILDING CODES APPLICABLE TO THE ARRANGEMENT DESCRIBED ON THIS DRAWING.
4. REFERENCE INSTALLATION MANUAL RS02044 FOR: CONNECTOR TORQUE VALUES, MODULE TO MODULE CONNECTIONS & FACEPLATE MOUNTING DETAILS.
5. CONNECTORS AND CABLES ARE SIZED TO THE 1 MIN. RATE AT 1.75 VPC AT 927.0 AMPS. CONNECTORS RESULT IN <30mV DROP AND CABLES RESULT IN <100mV DROP.

UNLESS OTHERWISE SPECIFIED DIMENSIONS ARE IN MM/IN. TOLERANCE: .XX ±.01 .XXX ±.005 .XXXX ±.0005 ANGLE ±1°
THIRD ANGLE PROJECTION
MATERIAL

DRAWN: M. REESE 11/18/14
CHECKED: 11/18/14
APPROVED: 11/18/14
FILE: E1565060CE01

ALL SHEETS ARE THE SAME REVISION STATUS

C&D TECHNOLOGIES, INC.
1400 UNION MEETING, BLUE BELL, PA 19422-0715
www.cdtechno.com

TITLE: CONNECTION DIAGRAM
120V/125V 6X5 AT-15P

SIZE: D | CAGE CODE | DRAWING NUMBER: E1565060CE01 | REVISION: 0
SCALE: NTS | SHEET 1 OF 1
12/2000

EXECUTIVE SUMMARY

The AT-09P, AT-29P, and AT-39P Battery Module Configurations, hereinafter called the equipment under test (EUT), were subjected to a GR-63-CORE, Issue 3, Compliance Test Program. The EUT was also subjected to a 2006 International Building Code (IBC) Earthquake Test Program. The test program included the tests listed in the table below:

Test	Specification
Packaged Drop	GR-63-CORE Section 5.3.1
Earthquake and Office Vibration	GR-63-CORE Section 5.4.1 and 5.4.2 and 2006 IBC 125% g, 200% g and 300% g RRS

Wyle Laboratories is accredited by the American Association for Laboratory Accreditation (A2LA) (Certificate No. 845.02), and the test results documented in this report have been determined in accordance with Wyle Laboratories' scope of accreditation.

The EUT was found to be compliant with all applicable GR-63-CORE requirements and objectives. The EUT also possessed sufficient integrity to satisfy the intent of the IBC. The Compliance Matrix included in this report indicates the GR-63-CORE requirements and objectives applicable to the tests performed and the compliance results.

Model	Number of Modules (W x H)	Bracing Kit	Maximum GR-63-CORE Earthquake Compliance Level	Maximum IBC Compliance Level*
AT-09P	4 x 6	Yes	Zone 4	300% g
AT-09P	4 x 8	Yes	Zone 4	300% g
AT-09P	4 x 10	No	---	125% g
AT-29P	4 x 6	Yes	Zone 4	300% g
AT-29P	4 x 9	No	---	125% g
AT-39P	3 x 4	No	Zone 4	200% g

* The tests performed also demonstrated compliance with the 2007 California Building Code (CBC) and ASCE 7-05.

Additionally, a palletized AT-09P 4 x 4 configuration, AT-29P 4 x 3 configuration, AT-39P 3 x 3 configuration, and an AT-39P 4 x 2 configuration were subjected to Drop Tests. Also, an AT-39P 4 x 6 configuration was successfully subjected to Office Vibration Tests. Typical EUT configurations are shown on the following page.

A similarity evaluation to be documented in a separate report will list additional Battery Module Configurations demonstrated to be compliant by this test program.

EXECUTIVE SUMMARY

The AT-21P, AT-29P, and AT-39P Battery Module Configurations, hereinafter called the equipment under test (EUT), were subjected to a GR-63-CORE, Issue 3, Compliance Test Program. The EUT was also subjected to a 2006 International Building Code (IBC) Earthquake Test Program. The test program included the tests listed in the table below:

Test	Specification
Earthquake Simulation	GR-63-CORE Section 5.4.1 and 5.4.2 and 2006 IBC 125% g and 300% g RRS

Wyle Laboratories is accredited by the American Association for Laboratory Accreditation (A2LA) (Certificate No. 845.02), and the test results documented in this report have been determined in accordance with Wyle Laboratories' scope of accreditation.

The EUT was found to be compliant with all applicable GR-63-CORE requirements and objectives. The EUT also possessed sufficient integrity to satisfy the intent of the IBC. The Compliance Matrix included in this report indicates the GR-63-CORE requirements and objectives applicable to the tests performed and the compliance results. Also, the AT-21P 3 x 8 300% g 2006 IBC/2007 CBC Level Compliance with bracing kit and the AT-21P 3 x 10 125% g 2006 IBC/2007 CBC Level Compliance without bracing kit are contingent on base module enhancements/modifications (see Notice of Anomaly 1). Additionally, the AT-39P 4 x 6 Zone 4 GR-63-CORE and 300% g 2006 IBC/2007 CBC Level Compliance with bracing kit are contingent on the base module enhancements/modifications and reinforced mounting base (see Notices of Anomaly 2 and 3).

Model	Number of Modules (W x H)	Bracing Kit	Maximum GR-63-CORE Earthquake Compliance Level	Maximum IBC Compliance Level*
AT-21P	3 x 8	Yes	Zone 4	300% g
AT-21P	3 x 10	Yes	—	125% g
AT-21P	3 x 10	No	—	125% g
AT-29P	4 x 9	Yes	—	125% g
AT-29P	4 x 9	No	—	125% g
AT-39P	4 x 6	Yes	Zone 4	300% g

* The tests performed also demonstrated compliance with the 2007 California Building Code (CBC) and ASCE 7-05.

Typical EUT configurations are shown on the following page.

A similarity evaluation to be documented in a separate report will list additional Battery Module Configurations demonstrated to be compliant by this test program.

EXECUTIVE SUMMARY

A Five String Battery Rack along with AT-39P Battery Module Configurations, hereinafter called the equipment under test (EUT), were subjected to a GR-63-CORE, Issue 3, Compliance Test Program. The test program included the tests listed in the table below:

Test	Specification
Earthquake Simulation	GR-63-CORE Section 5.4.1 and 5.4.2

Wyle Laboratories is accredited by the American Association for Laboratory Accreditation (A2LA) (Certificate No. 845.02), and the test results documented in this report have been determined in accordance with Wyle Laboratories' scope of accreditation.

The EUT was found to be compliant with all applicable GR-63-CORE requirements and objectives with the following exception. The Five String Battery Rack and the Eight-High Stack of AT-39P Modules did not achieve the greater than 6.0 Hz resonant frequency objective O4-71. The Compliance Matrix included in this report indicates the GR-63-CORE requirements and objectives applicable to the tests performed and the compliance results.

Model	Number of Modules (W x H)	Bracing Kit	Top Angle	Maximum GR-63-CORE Earthquake Compliance Level
Five String	4 x 5	—	—	Zone 2
AT-39P	3 x 8	Yes	Yes	Zone 2
AT-39P	3 x 8	No	Yes	Zone 2
AT-39P	3 x 8	No	No	Zone 2
AT-39P	3 x 8	Yes	Yes	Zone 4

Typical EUT configurations are shown on the following page.

A similarity evaluation to be documented in a separate report will list additional Battery Module Configurations demonstrated to be compliant by this test program.

December 20, 2012

Reference: UBC Zone 4 Certification of C&D msEndur II ATP/ATLP modular battery systems.

To whom it may concern,

Executive Summary:

C&D battery modules RD04406, per drawings M14011 and M14014, are qualified to withstand statically applied seismic accelerations per 1994 UBC seismic Zone 4 requirements of up to .9g. Systems assembled up to 8-tiers high, ranging in width from 18" to 45", filled with C&D Technologies msEndur II ATP/ATLP batteries (AT(L)-07P through AT(L)-39P) are in compliance with the seismic requirements including applicable codes, specifications and standards as identified by the 1994 edition of the Uniform Building Code, section 1630. Battery modules must be properly fabricated to the C&D drawing specifications and systems must be properly assembled, supported and anchored in order to meet these requirements.

Professional Engineering Analysis and Certification:

In 1992 C&D Technologies contracted Nuclear Logistics, Inc. (NLI) to analyze and certify the Liberty 2000 modular battery systems to the 1991 Uniform Building Code (UBC) for use in seismic zones 2B and 4. The findings of this analysis were reported in NLI report number C-023-003-1, dated 4/6/1992, signed and stamped by California registered Professional Engineer Michael B. de Estrada. In conclusion, it was determined that all systems of RD02209 modules per the design drawings current at the time met the structural requirements for zone 2B and that all systems of RD02210 modules except for 8 and 9 tier, 39 inch wide systems per the design drawings current at the time met the structural requirements for zone 4.

In 1998 C&D Technologies contracted FDI Engineering to certify the seismic zone 4 Liberty 2000 modular battery systems to the 1994 UBC. Based on their structural analysis, FDI Engineering certified that all of the battery systems consisting of RD02210 modules "shown on drawing M11724 are qualified to withstand statically applied seismic accelerations as defined in section 1630 of the 1994 UBC" and that the "modules are designed to meet the requirements of Zone 4 up to and including 0.9g". FDI analysis report A-1-98 and signed and stamped certificate by North Carolina registered Professional Engineer Michael D. Mountcastle, dated 1/25/1998, were submitted to C&D Technologies in support of those findings.

Today, C&D Technologies' comparable battery models to the Liberty 2000 both in size and weight, the msEndur II ATP & ATLP, use modules RD04406 as defined in drawings M14011 and M14014 (assemblies shown in M14111-09). These are identical in construction to the RD02210 modules per drawing M11723-04 (assemblies shown in M11724-00) with minor superficial modifications, which have no negative structural impact. By analogy then it follows that modular battery systems consisting of RD04406 modules, assembled up to 8-tiers high, ranging in width from 18" to 45", filled with C&D Technologies msEndur II ATP & ATLP batteries (AT(L)-07P through AT(L)-39P), are also in compliance with the seismic requirements including applicable codes, specifications and standards as identified by the 1994 edition of the Uniform Building Code, section 1630.

Andrew Marraffa, P.E.
Pennsylvania License No: PE-049003-E

COMMONWEALTH OF PENNSYLVANIA
REGISTERED PROFESSIONAL
ANDREW M. MARRAFFA
ENGINEER
PE-049003-E

msEndur II ATP Certification Letter.docx