top piece is analyzed as part of the enclosure vessel pressure boundary. The bottom piece acts as a radiation shield and is attached to the top piece with a non-structural, non-pressure retaining weld. The lid is equipped with vent and drain ports that are utilized to remove moisture and air from the MPC, and backfill the MPC with a specified amount of inert gas (helium). The vent and drain ports (fabricated with or without the redundant port cover design) are covered and seal welded before the closure ring is installed. The closure ring is a circular ring edge-welded to the MPC shell and lid. The MPC lid provides sufficient rigidity to allow the entire MPC loaded with SNF to be lifted by threaded holes in the MPC lid.

For fuel assemblies that are shorter than the design basis length, upper and lower fuel spacers (as appropriate) maintain the axial position of the fuel assembly within the MPC basket. The upper fuel spacers are threaded into the underside of the MPC lid as shown in Figure 1.2.5. The lower fuel spacers are placed in the bottom of each fuel basket cell. The upper and lower fuel spacers are designed to withstand normal, off-normal, and accident conditions of storage. An axial clearance of approximately 2 to 2-1/2 inches is provided to account for the irradiation and thermal growth of the fuel assemblies. The suggested values for the upper and lower fuel spacer lengths are listed in Tables 2.1.9 and 2.1.10 for each fuel assembly type. The actual length of fuel spacers will be determined on a site-specific or fuel assembly-specific basis.

The MPC confinement boundary is constructed entirely from stainless steel alloy materials. All MPC components that may come into contact with spent fuel pool water or the ambient environment (with the exception of neutron absorber, aluminum seals on vent and drain port caps, optional aluminum heat conduction elements, and MPC extruded aluminum shims) must be constructed from stainless steel alloy materials. Concerns regarding interaction of coated carbon steel materials and various MPC operating environments [1.2.1] are not applicable to the MPC. All structural components in a MPC shall be made of Alloy X, a designation which warrants further explanation.

Alloy X is a material that is expected to be acceptable as a Mined Geological Disposal System (MGDS) waste package and which meets the thermophysical properties set forth in this document.

At this time, there is considerable uncertainty with respect to the material of construction for an MPC that would be acceptable as a waste package for the MGDS. Candidate materials being considered for acceptability by the DOE include:

- Type 316
- Type 316LN
- Type 304
- Type 304LN

The DOE material selection process is primarily driven by corrosion resistance in the potential environment of the MGDS. As the decision regarding a suitable material to meet disposal requirements is not imminent, the MPC design allows the use of any one of the four Alloy X materials.

For the MPC design and analysis, Alloy X (as defined in this FSAR) may be one of the following materials. Any steel part in an MPC may be fabricated from any of the acceptable Alloy X materials

- Stability of the homogeneous nature of the shielding material matrix;
- Stability of the shielding material in mechanical or thermal accident conditions to the desired performance levels; and
- Predictability of the manufacturing process under adequate procedural control to yield an in-place neutron shield of desired function and uniformity.

Other aspects of a shielding material, such as ease of handling and prior nuclear industry use, are also considered, within the limitations of the main criteria. Final specification of a shield material is a result of optimizing the material properties with respect to the main criteria, along with the design of the shield system, to achieve the desired shielding results.

Neutron attenuation in the HI-STORM overpack is provided by the thick walls of concrete contained in the steel vessel, lid, and pedestal (only for the HI-STORM 100 and –100S overpack designs). Concrete is a shielding material with a long proven history in the nuclear industry. The concrete composition has been specified to ensure its continued integrity at the long term temperatures required for SNF storage.

The HI-TRAC transfer cask is equipped with a water jacket providing radial neutron shielding. Demineralized water will be utilized in the water jacket. To ensure operability for low temperature conditions, ethylene glycol (25% in solution) will be added to reduce the freezing point for low temperature operations (e.g., below 32ºF) [1.2.7]. Addition of ethylene glycol in the water jacket is not required if the MPC heat load is high enough to preclude freezing of the water. This threshold MPC heat load is determined on a site-specific basis through the methodology described in Section 4.5.7.

Neutron shielding in the HI-TRAC 125, 125D, and 100G transfer casks in the axial direction is provided by Holtite-A within the top lid. HI-TRAC 125 also contains Holtite-A in the transfer lid. Holtite-A is a poured-in-place solid borated synthetic neutron-absorbing polymer. Holtite-A is specified with a nominal B_4C loading of 1 weight percent for the HI-STORM 100 System. Appendix 1.B provides the Holtite-A material properties germane to its function as a neutron shield. Holtec has performed confirmatory qualification tests on Holtite-A under the company's QA program.

In the following, a brief summary of the performance characteristics and properties of Holtite-A is provided.

Density

The specific gravity of Holtite-A is 1.68 g/cm^3 as specified in Appendix 1.B. To conservatively bound any potential weight loss at the design temperature and any inability to reach the theoretical density, the density is reduced by 4% to 1.61 g/cm^3. The density used for the shielding analysis is conservatively assumed to be 1.61 g/cm^3 to underestimate the shielding capabilities of the neutron shield.

At the start of loading operations, the HI-TRAC transfer cask is configured with the pool lid installed. The HI-TRAC water jacket is filled with demineralized water or a 25% ethylene glycol solution, depending on the ambient temperature conditions and MPC heat loads. The lift yoke is used to position HI-TRAC in the designated preparation area or setdown area for HI-TRAC inspection and MPC insertion. The annulus is filled with plant demineralized water, and an inflatable annulus seal is installed. The inflatable seal prevents contact between spent fuel pool water and the MPC shell reducing the possibility of contaminating the outer surfaces of the MPC. The MPC is then filled with water (borated if necessary). Based on the MPC model and fuel enrichment, this may be borated water or plant demineralized water (see Section 2.1). HI-TRAC and the MPC are lowered into the spent fuel pool for fuel loading using the lift yoke. Pre-selected assemblies are loaded into the MPC and a visual verification of the assembly identification is performed.

While still underwater, a thick shielding lid (the MPC lid) is installed. The lift yoke is remotely engaged to the HI-TRAC lifting trunnions and is used to lift the HI-TRAC close to the spent fuel pool surface. As an ALARA measure, dose rates are measured on the top of the HI-TRAC and MPC prior to removal from the pool to check for activated debris on the top surface. The MPC lift bolts (securing the MPC lid to the lift yoke) are removed. As HI-TRAC is removed from the spent fuel pool, the lift yoke and HI-TRAC are sprayed with demineralized water to help remove contamination.

HI-TRAC is removed from the pool and placed in the designated preparation area. The top surfaces of the MPC lid and the upper flange of HI-TRAC are decontaminated. The inflatable annulus seal is removed, and an annulus shield is installed. The annulus shield provides additional personnel shielding at the top of the annulus and also prevents small items from being dropped into the annulus. The Automated Welding System baseplate shield (if used) is installed to reduce dose rates around the top of the cask. The MPC water level is lowered slightly and the MPC lid is seal-welded using the Automated Welding System (AWS) or other approved welding process. Liquid penetrant examinations are performed on the root and final passes. A multi-layer liquid penetrant or volumetric examination is also performed on the MPC lid-to-shell weld. The MPC water is displaced from the MPC by blowing pressurized helium or nitrogen gas into the vent port of the MPC, thus displacing the water through the drain line. At the appropriate time in the sequence of activities, appropriate non-destructive tests on the MPC Enclosure Vessel as set down in Chapter 9 are performed.

For MPCs containing all moderate burnup fuel, a Vacuum Drying System (VDS) may be used to remove moisture from the MPC cavity. The VDS is connected to the MPC and is used to remove liquid water from the MPC in a stepped evacuation process. The stepped evacuation process is used to preclude the formation of ice in the MPC and Vacuum Drying System lines. The internal pressure is reduced and held for a duration to ensure that all liquid water has evaporated. This process is continued until the pressure in the MPC meets the technical specification limit and can be held there for the required amount of time.

For storage of high burnup fuel and as an option for storage of moderate burnup fuel, the reduction of residual moisture in the MPC to trace amounts is accomplished using a Forced Helium Dehydration (FHD) system, as described in Appendix 2.B. Relatively warm and dry helium is recirculated through the MPC cavity, which helps maintain the SNF in a cooled condition while

moisture is being removed. The warm, dry gas is supplied to the MPC drain port and circulated through the MPC cavity where it absorbs moisture. The humidified gas travels out of the MPC and through appropriate equipment to cool and remove the absorbed water from the gas. The dry gas may be heated prior to its return to the MPC in a closed loop system to accelerate the rate of moisture removal in the MPC. This process is continued until the temperature of the gas exiting the demoisturizing module described in Appendix 2.B meets the specified limit.

Following moisture removal, the MPC is backfilled with a predetermined amount of helium gas. The helium backfill ensures adequate heat transfer during storage and provides an inert atmosphere for long-term fuel integrity. Cover plates are installed and seal-welded over the MPC vent and drain ports with liquid penetrant examinations performed on the root and final passes. The cover plates are helium leakage tested to confirm that they meet the established leakage rate criteria. If the redundant port cover design is used, the helium leakage test is not required to be performed.

The MPC closure ring is then placed on the MPC, aligned, tacked in place, and seal welded, providing redundant closure of the MPC lid and cover plates confinement closure welds. Tack welds are visually examined, and the root and final welds are inspected using the liquid penetrant examination technique to ensure weld integrity. The annulus shield is removed and the remaining water in the annulus is drained. The AWS Baseplate shield is removed. The MPC lid and accessible areas of the top of the MPC shell are smeared for removable contamination and HI-TRAC dose rates are measured. The HI-TRAC top lid is installed and the bolts are torqued. The MPC lift cleats are installed on the MPC lid. The MPC lift cleats are the primary lifting point of the MPC.

Rigging is installed between the MPC lift cleats and the lift yoke. . The rigging supports the MPC within HI-TRAC while the pool lid is replaced with the transfer lid. For the standard design transfer cask, the HI-TRAC is manipulated to replace the pool lid with the transfer lid. The MPC lift cleats and rigging support the MPC during the transfer operations.

MPC transfer from the HI-TRAC transfer cask into the overpack may be performed inside or outside the fuel building. Similarly, HI-TRAC and HI-STORM may be transferred to the ISFSI in several different ways. The loaded HI-TRAC may be handled in the vertical or horizontal orientation. The loaded HI-STORM can only be handled vertically.

For MPC transfers inside the fuel building, the empty HI-STORM overpack is inspected and staged with the lid removed, the alignment device positioned, and, for the HI-STORM 100 overpack, the vent duct shield inserts installed. If using HI-TRAC 100D, 125D, or 100G, the HI-STORM mating device is placed (bolted if required by generic or site specific seismic evaluation) to the top of the empty overpack (Figure 1.2.18). The loaded HI-TRAC is placed using the fuel building crane on top of HI-STORM, or the mating device, as applicable. After the HI-TRAC is positioned atop the HI-STORM or positioned (bolted if required by generic or site specific seismic evaluation) atop the mating device, as applicable, the MPC is raised slightly. With the standard HI-TRAC design, the transfer lid door locking pins are removed and the doors are opened. With the HI-TRAC 100D, 125D, and 100G, the pool lid is removed using the mating device. The MPC is lowered into HI-STORM. Following verification that the MPC is fully lowered, slings are disconnected and lowered onto the MPC lid. For the HI-STORM 100, the doors are closed and the HI-TRAC is prepared for removal from on top of HI-STORM (with HI-TRAC 100D, 125D, and 100G, the transfer cask must

Table 1.2.6

HI-STORM 100 OPERATIONS SEQUENCE

Site-specific handling and operations procedures will be prepared, reviewed, and approved by each owner/user.	
1	HI-TRAC and MPC lowered into the fuel pool without lids
2	Fuel assemblies transferred into the MPC fuel basket
3	MPC lid lowered onto the MPC
4	HI-TRAC/MPC assembly moved to the decon pit and MPC lid welded in place, volumetrically or multi-layer PT examined, and pressure and leakage tested, as applicable
5	MPC dewatered, moisture removed, backfilled with helium, and the closure ring welded
6	HI-TRAC annulus drained and external surfaces decontaminated
7	MPC lifting cleats installed and MPC weight supported by rigging
8	HI-TRAC pool lid removed and transfer lid attached (not applicable to HI-TRAC 100D, 125D, or 100G)
9	MPC lowered and seated on HI-TRAC transfer lid (not applicable to HI-TRAC 100D, 125D, or 100G)
9a	HI-STORM mating device secured to top of empty HI-STORM overpack (HI-TRAC 100D, 125D, and 100G only)
10	HI-TRAC/MPC assembly transferred to atop the HI-STORM overpack or mating device, as applicable
11	MPC weight supported by rigging and transfer lid doors opened (standard design HI-TRAC) or pool lid removed (HI-TRAC 100D, 125D, and 100G)
12	MPC lowered into HI-STORM overpack, and HI-TRAC removed from atop the HI-STORM overpack/mating device
12a	HI-STORM mating device removed (HI-TRAC 100D, 125D, and 100G only)
13	HI-STORM overpack lid installed and bolted in place
14	HI-STORM overpack placed in storage at the ISFSI pad
15	For HI-STORM 100A (or 100SA) users, the overpack is anchored to the ISFSI pad by installation of nuts onto studs and torquing to the minimum required torque.

APPENDIX 1.D: ~~Requirements on~~Specification for Plain Concrete in the HI-STORM ~~100 Shielding Concrete~~Family of Overpacks

1.D.1 Introduction

~~The HI-STORM 100 overpack utilizes~~This Appendix provides the generic technical specification for plain concrete ~~for~~ for all HI-STORM overpack versions for the neutron and gamma shielding~~.~~ function which employ unreinforced concrete in a confined environment. Hereafter, for brevity, the term HI-STORM is used to represent all its versions and models. Plain concrete used in the HI-STORM overpack ~~provides only a compressive strength~~ is not bonded to the HI-STORM overpack's dual steel shell structure surfaces and therefore, its structural function ~~due to the fact that both the primary and secondary load bearing members~~is limited to maintaining its monolithic shape in the normal condition of ~~the overpack are made~~storage and to withstanding any missiles under an accident event. The buttressed steel shell structure in the body and Closure lid of ~~carbon steel.~~the overpacks provide the requisite structural strength to the cask structure. While most of the shielding concrete used in the HI-STORM ~~100 overpack~~overpacks is installed in the annulus between the concentric structural shells, smaller quantities of concrete are also present in the pedestal shield and the overpack lid. Because plain concrete has little ability to withstand tensile stresses, but is competent in withstanding compressive and bearing loads, the design of the HI-STORM ~~100~~overpack places no reliance on the tension-competence of the shielding concrete.

During normal operations of the HI-STORM, the stresses in the concrete continuum are negligible, arising solely from its self-weight. The provisions of ACI 318~~.~~ [1~~-89(92) provides formulas.~~D.1] are invoked as applicable, to provide a complete set of requirements for ~~permissible compressive~~concrete and ~~bearing stresses~~its placement in ~~plain concrete, which incorporate a penalty over the corresponding permissible values in reinforced concrete. The~~HI-STORM. Likewise, the formulas for permissible compressive and bearing stresses set forth in ~~ACI 318.1-89(92)~~[1.D.1] ~~-~~are used in the calculations ~~supporting this FSAR in~~for the load cases involving compression or bearing loads on the overpack concrete. However, since the overpack concrete is designated as an ITS Category B material, it is appropriate to ensure that all "*critical characteristics*" of the concrete, as defined herein, are fully satisfied. During normal storage operations, the overpack concrete is completely enclosed by the overpack steel structure, protecting it from the deleterious effects of direct exposure to the environment, typical of most concrete structures ~~governed by~~used in the ~~ACI codes~~industry.

The "*critical characteristics*" of the plain concrete in the HI-STORM overpack are: (i) its density ~~and~~ (ii) its compressive strength~~.~~, and for unventilated overpack models only, (iii) thermal conductivity.

This appendix provides the ~~criteria applicable to the~~governing specification for ~~-~~plain concrete used in the various models of the HI-STORM ~~100 overpack~~family of overpacks and associated ~~-~~ancillary equipment where plain concrete may be used. Like the rest of the material in this FSAR, it takes precedence all codes, norms and standards referenced herein.

1.D.2 Design Requirements

The paragraphs applicable to plain concrete ~~(not reinforced concrete)~~ in ~~American Concrete Institute (ACI) 349-85~~[1.D.1] provide the governing requirements for HI-STORM overpack concrete to ensure that ~~the key parameters that bear upon the performance of concrete in the HI-STORM overpack, (namely, density and compressive strength)~~ its critical characteristics noted above are in compliance with the design basis values specified for the storage system.

This Appendix uses US national consensus standards, such as ASTM and ACI, for providing succinct design and operational guidelines. Equivalent foreign or international national norms and standards may be employed instead in overseas jurisdictions if ~~determined to be acceptable through the 72.48 change process.~~, at minimum, the *critical characteristics* specified in this Appendix are met.

The primary function of the plain concrete is to provide neutron and gamma shielding. As plain concrete is structurally competent in compression, the plain concrete's effect on the performance of the HI-STORM overpack under compression loadings is considered and modeled in the structural analyses, as necessary. The HI-STORM concrete is termed *non-structural* concrete.

~~The steel structure of the HI-STORM overpack provides the strength to meet all load combinations specified in Chapters 2 and 3, due to the fact that both the primary and secondary load bearing members (as defined in the ASME Code, Section III, Subsection NF-1215) of the HI-STORM overpack are made from carbon steel. Credit for the structural strength of the plain concrete is only taken to enhance the compressive load carrying capability of the concrete in calculations appropriate to handling and transfer operations, and to demonstrate that the HI-STORM 100 System continues to provide functional performance in a post-accident environment. Therefore, the load combinations provided in ACI 349 and NUREG-1536, Table 3-1 are not applicable to the plain concrete in the HI-STORM overpack.~~

The shielding performance of the plain concrete is maintained by ensuring that the minimum concrete density is met during its placement and the allowable concrete temperature limits are not exceeded. The thermal analyses for normal and off-normal conditions utilize the temperature limits provided in Table 1.D.1. The temperature limits for transient conditions (such as under partial or full duct blockage and fire) are set down in reference [1.D.4] in conformance with the guidelines in the ACI code, supplemented by data from the published permanent literature. A state-of-the-art review paper [1.D.5], which contains the information in other industry publications listed in the reference section, provides extensive test data on the temperature dependence of plain concrete. In reference [1.D.4] the guidance from ACI and the published archival data on plain concrete has been used to establish temperature limits for normal and transient conditions listed in Table 1.D.1 herein.

1.D.2.1 Consideration of Temperature effects ~~on HI-STORM concrete~~

The principal function of the concrete is to provide shielding against gamma and neutron radiation. However, the massive bulk of concrete imparts a large thermal inertia to the HI-STORM ~~FW~~ overpack, allowing it to moderate the rise in temperature of the system under hypothetical thermal

transient conditions ~~when all ventilation passages are assumed to be blocked~~. During the postulated fire accident, the high thermal inertia characteristics of the HI-STORM overpack concrete control the temperature of the MPC. Although the annular concrete mass in the overpack shell is not a structural member, it does act as an elastic/plastic filler of the inter-shell space buttressing the steel shells

Because HI-STORM concrete does not contain reinforcing steel is not relied on to bond with the overpack's steel weldment, its allowable temperatures under normal and other operating conditions are guided by considerations of loss of entrained hydrogen which is important to neutron attenuation. Likewise, the differential thermal expansion between the concrete and interfacing steel is not a significant parameter because the thermal stresses produced by any mismatch belong to the class of secondary stresses which are alleviated by the deformations required to establish compatibility.

~~Exposure of concrete~~ Because sustained exposure ~~-~~to elevated temperatures can affect ~~its~~plain concrete's~~-~~ properties due to the dehydration or loss of absorbed and chemically combined water~~. With respect to concrete~~ , the shielding performance of the HI-STORM concrete at ~~local~~ temperatures above 300°F~~, [1.D.4] examined weight loss and thermal degradation mechanisms of concrete at elevated temperatures.~~

~~Using~~ shall be factored in the overpack's service life evaluation using the data in [1.D.4~~] to address a postulated accident that may occur during the 30-day vent blockage~~, 1.D.5] if the local temperature in the concrete's corpus exceeds 300F for extended periods. The data in [1.D.4, 1.D.5] shall also be used for determining the shielding and structural adequacy of the HI-STORM concrete after a significant thermal event such as an ISFSI fire or an "all-ducts blocked condition" in ventilated module models. ~~(i.e. a tornado borne missile impact), the compressive strength of the concrete is conservatively reduced by 50% even though the maximum temperature experienced by concrete during 30-day vent blockage accident is less than 450°F and is about 300°F during long term normal condition. The evaluations (Supplements 15 and 25 of HI-2012769) conclude that the concrete in overpack, post 50% strength reduction, is acceptable during and after the 30-day vent blockage accident, and during the long-term normal condition.~~

~~To evaluate the effect of hydrogen loss on the shielding performance of the HI-STORM 100, it was assumed that entire hydrogen is lost from the concrete. This is a conservative estimate of an upper bound dose rate effect. Water and hydrogen is present in concrete in two forms, chemically bound water/hydrogen, and physically bound water. The material properties for the concrete in the HI-STORM 100 assume hydrogen content that is less than or equal to that in the chemically bound water. As the entire weight loss is attributed to water loss, the total amount of hydrogen in concrete is expected to be no less than 0.8 wt%. The assumed hydrogen content in concrete composition listed in Table 5.3.2 of the FSAR is only 0.6 wt%, which is used for shielding analyses. The analyses results show that shielding performance with such reductions in hydrogen content is negligible. Additionally, the results demonstrate that the hypothetical HI-STORM 100% duct blockage accident condition is bounded by the HI-TRAC accident condition discussed in Section 5.1.2 of the FSAR.~~Table 1.D.1 provides reference to the chemical composition of concrete that can be used in shielding calculations after a significant thermal event. It also provides the corresponding lower

bound value of concrete's compressive strength in the wake of a significant thermal event which can be used if a site-specific test data is not available.

1.D.3 Material Requirements

Table 1.D.1 provides the material limitations and requirements applicable to the overpack plain concrete. These requirements~~, drawn from ACI 349-85 and supplemented by the provisions of NUREG 1536 (page 3-21),~~ are intended to ensure that the "*critical characteristics*" of the concrete placed in the HI-STORM overpack comply with the requirements of this Appendix and standard good practice~~.~~

~~ACI 349 was developed to govern the design and construction of steel reinforced concrete structures for the entire array of nuclear power plant applications, except for concrete reactor vessels and containment structures. As such, ACI 349 contains many requirements not germane to the plain concrete installed within and completely enclosed by the steel HI-STORM overpack structure. For example, the overpack concrete is not exposed to the environment, so provisions in the standard for protecting concrete from the environment would not be applicable to the concrete contained in the overpack.~~

~~In accordance with the requirement in Section 3.3 of Appendix B of the HI-STORM 100 CoC, Section 1.D.4, Table 1.D.1 and Table 1.D.2 were developed using the guidance of ACI 349-85, to the extent~~ applicable to the unique application of placing unreinforced concrete inside the steel enclosure of the HI-STORM overpack. Other concrete standards ~~were used~~are consulted in developing Table 1.D.1, as appropriate, to provide the controls necessary to assure that the *critical characteristics* of the overpack concrete will be achieved and that the concrete will perform its ~~design~~intended function.

Aggregate is an important constituent material in the shielding concrete installed in the HI-STORM unit. The critical criteria that the aggregate must fulfill to support the HI-STORM's service life are its chemical inertness in the concrete's environment, absence of large concentration of deleterious materials such as chlorides, and appropriate specific gravity. Because the mass of the shielding in a HI-STORM module is customized to meet shielding requirements for a ~~particular~~specific application, several candidate materials are available for a ~~particular application from which~~specific site where sourcing a locally available material ~~can~~may be ~~sourced~~more feasible. Broadly speaking, the aggregates may be placed in two categories, namely, standard, and heavy aggregate.

(a) Standard aggregates pre-approved for HI-STORM application are limestone, marble, basalt, granite, gabbro, or rhyolite. The thermal expansion coefficient limit does not apply when these aggregates are used. Careful consideration shall be given to the potential of long-term degradation of concrete due to chemical reactions between the aggregate and cement selected for HI-STORM overpack concrete. Unlike reinforced concrete where the differential thermal expansion between the rebars and the concrete may weaken their adhesive bond resulting in loss of strength, thermal expansion coefficient of the aggregate is not a critical characteristic in plain concrete.

(b) Heavy aggregates pre-approved for HI-STORM applications are the following selected from [1.D.2]: They are Hematite, Magnetite (FeFe2O4), and Barite (BaSO4).

Shielding Enhancer Additives may be used to enhance the shielding effectiveness or neutron capture effectiveness of the plain concrete. To enhance the gamma shielding effectiveness, it is permissible to use a higher density conventional aggregate and/or to incorporate suitable high specific gravity non-organic material (such as granularized or chipped steel) as additives. To improve the neutron capture effectiveness, granules of material with high neutron absorption cross-sections may also be dispersed in the plain concrete. Table 1.D.3 provides the acceptance criteria for using shielding enhancer additives. It is noted that any specific material selected for use as a shielding enhancer additive to meet site specific needs may require additional consideration under the §72.48 process to show conformance with the requirements of Table 1.D.3.

In addition to the pre-approved aggregates, locally available natural or synthetic aggregates may be considered for a site-specific application if they meet the acceptance criteria summarized above.

1.D.3.1 Essential Requirements for Concrete Supplier and Lab Testing Support

The ~~material~~materials used in HI-STORM ~~related~~ concrete shall be procured to satisfy Holtec's QA program for ITS Category B materials. ~~-~~The ~~QA surveillance record on~~following requirements pursuant to the ITS-B designation apply to the acquisition of constituent materials and associated tests.

(i) The concrete supplier must ~~be current at the time~~meet the certificate holder's criteria for corporate experience, cadre' of qualified professionals and track record of satisfactory performance.

(ii) The mix design shall be subject to technical review and approval by the Certificate Holder's Civil Engineering department.

(iii) Test cylinders shall be prepared and tested to ensure compliance with the required critical characteristics of the plain concrete as set down in HSP-170 [1.D.6]

(iv) Prior to the start of concrete placement~~.~~ at the site, the supplier shall be subject to a comprehensive surveillance by one or more designated personnel certified by Holtec to possess the technical know-how to conduct effective assessment of the supplier's capabilities. The surveillance ~~shall~~ which will be performed in accordance with written procedures that include activities that are crucial to ~~insure~~ensure that all required *critical characteristics* shall be met such as, confirmation that scales used in the batching process are calibrated, delivery trucks are inspected to confirm working condition, and aggregate material stored at the facility is properly stored and segregated. ~~.~~

(v) ~~With respect to the~~The test lab ~~services, the~~shall also be subject to a comprehensive surveillance using written procedures ~~describing the surveillance of the lab shall~~to ensure that the equipment used in testing of aggregates and concrete compression samples is calibrated. Additionally, the procedure will address the inspection of the concrete cylinder storage facilities as well as basic material controls. ~~With these controls in place, the results~~

~~of any aggregate testing or concrete cylinder testing can be confirmed to be accurate and reliable.~~

(vi) In overseas jurisdictions, Holtec standard procedure HSP-170[1.D.6] will be amended to meet national norms and standards , as necessary.

1.D.3.2 Concrete Mix Design and Material Requirements

A concrete mix design shall be developed in accordance with written procedures to determine the necessary quantity of constituent materials ~~(the recipe)~~ to produce a HI-STORM concrete that meets the *critical characteristics* of the HI-STORM as specified ~~in this section.~~herein. Holtec Standard Procedures provide detailed requirements and testing logistics to comply with this appendix.

~~With respect to individual aggregate testing, those provisions from ACI 349 that are germane to the plain concrete installed in and completely enclosed by the steel HI-STORM overpack structure are summarized herein.~~ For ~~example, the overpack concrete is not exposed to the environment, so provisions in the ACI standards for protecting concrete from the environment would not be applicable to the concrete contained in the overpack.~~

~~For the~~ standard application, use of local coarse and fine aggregates ~~supplied by the~~ in continuous use secured from a local batch~~,~~ facility, which provides a high level of confidence ~~based on continued use in area concrete~~ obviates the need for many of the aggregate testing recommended by ASTM C33[1.D.8]. The source pile shall be visually inspected to evaluate the aggregates for any deleterious substances or organic impurities. If this visual inspection reveals any evidence of deleterious substances or organic impurities, additional aggregate testing that addresses deleterious substances per ASTM C33 for both fine and coarse aggregates as well as organic impurities testing per ASTM C40 for the local fine aggregate shall be conducted.

High density aggregate that is supplied from an outside source, shall also be tested to confirm grading per ASTM C33 as modified by ASTM C637 [1.D.9].

~~1.D.3.3 Shielding Enhancer Additives~~

~~Shielding Enhancer Additives may be used to enhance the shielding effectiveness or neutron capture effectiveness of the plain concrete. To enhance the gamma shielding effectiveness, it is permissible to use a higher density conventional aggregate and/or to incorporate suitable high specific gravity non-organic material as additives. To improve the neutron capture effectiveness, granules of material with high neutron absorption cross-sections may also be dispersed in the plain concrete. The Shielding Enhancer Additives shall meet the product performance criteria set forth in Table 1.D.3. The use of Shielding Enhancer Additives requires consideration be given to the effects on Chapter 4 thermal evaluations and Chapter 5 shielding evaluations concerning the plain concrete on a site-specific basis. If the use of Shielding Enhancer Additives causes the overpack to exceed the bounding weight used in Chapter 2 structural qualifications, the HI-STORM shell and/or lid "steel structure", as applicable, shall be evaluated to insure that all structural requirements set forth in Chapter 2 are satisfied. It is noted that any specific material selected for use as a Shielding Enhancer~~

~~Additive may require additional consideration under the §72.48 process.~~

1.D.4 Construction Requirements

As is true of all SSCs in this FSAR, the design, construction and commissioning principles set down in this Appendix for plain concrete are implemented through Holtec Standard Procedures (HSPs) prepared and adopted under the Company's quality assurance program.

~~The slump of the concrete shall be checked as necessary prior to placement to ensure that the concrete is suitable for pumping.~~

~~Appropriate measures shall be taken for hot and cold weather conditions as prescribed by ACI-305R and ACI-306R, respectively.~~

1.D.5 Testing Requirements

Fresh concrete tests and compressive testing shall be performed in accordance with written procedures meeting the requirements of the applicable ASTM ~~standard~~standards. Concrete may be tested for temperature, slump, and density for each truck prior to placement in the HI-STORM for informational purposes. Official samples, as required by the applicable written procedure, will become the sample of record for slump, temperature, and density. Additionally, compressive test cylinder samples shall be ~~taken of a quantity~~extracted to support required break tests as detailed in the governing Holtec procedure~~ and will ensure a representative sample of the concrete is tested in accordance with ACI 349-85.~~. At a minimum, one set of samples must be taken for each HI-STORM. All test samples shall be prepared, stored, and tested in accordance with written procedures. Compressive break strengths of the official concrete cylinder samples taken shall be tested for the required minimum concrete strength. ~~Based upon~~Because the~~ fact that~~ compressive strength of concrete is known to increase monotonically with the time of curing, break tests resulting in a compressive strength exceeding the minimum required compressive strength earlier than 28 days may be used as the official concrete break data in lieu of waiting for 28-day breaks.

1.D.6 References

[1.D.1] ACI 318, 2019, "Building Code Requirements for Structural Concrete", Chapter14.

[1.D.2] ASTM C638; Standard descriptive nomenclature of constituents of aggregates for radiation shielding concrete.

[1.D.3] Concrete Manual, 8th Edition, US Bureau of Proclamation, Denver, Colorado, 1975.

[1.D.4] Holtec Position Paper, DS-289,"Maximum Permissible Temperature in Plain Concrete in HI-STORM System Components Under Off-Normal and Accident Conditions", Revision 5.

[1.D.5] Kodur,V., "Properties of Concrete at Elevated Temperatures", ISRN Civil Engineering,

Volume 2014 (2014), Article ID 468510, 15 pages.

[1.D.6] Holtec Standard Procedure HSP-170, "Concrete Placement Procedure", Latest Revision (Holtec Proprietary)

[1.D.7] Lamond, J.F. & Pielert, J.H., "Significance of Tests and Properties of Concrete and Concrete-Making Materials," ASTM STP 169D, April 2006.

[1.D.8] ASTM C33; Standard Specification for Concrete Aggregates

[1.D.9] ASTM C637; Standard Specification for Aggregates for Radiation-Shielding Concrete

Table 1.D.1
:Requirements for Plain Concrete (see numbered notes below)

ITEM	APPLICABLE LIMIT OR REFERENCE
~~Density in overpack body (~~Minimum~~)~~ ~~(see Table 3.2.1 for information on maximum~~ concrete ~~–~~density~~)~~ in overpack body and Closure Lid	~~140 lb/ft^3~~140 lb/ft^3 ; unless specified otherwise in the applicable HI-STORM FSAR. [Note 1,8)]
~~Density in lid and pedestal (Minimum)~~ ~~(See Table 3.2.1 for information on maximum~~Minimum concrete density~~)~~ in unventilated overpacks	~~140 lb/ft^3 (HI-STORM 100S Version B does not have a concrete filled pedestal)~~ 200 pcf (Note 1, 8)
Reference concrete conductivity (ventilated overpacks)	See Table 4.2.2
Minimum Concrete conductivity (unventilated overpack only)	1.50 Btu/hr-ft-Deg. F [Note 3]
~~Specified~~Minimum assumed Compressive Strength in structural calculations	3,300 psi (Note 5)
Compressive and Bearing Stress Limit	Per ~~ACI 318.~~[1~~-89(92)~~.D.1]
Cement Type and Mill Test Report	Type II; (ASTM C 150)
Aggregate Type	Fine and coarse aggregate as required (Note 2)
Nominal Maximum Aggregate Size	1-1/2 (inch)
Reference ~~Water Quality~~ Chemical Composition of Concrete~~e~~	~~Deleted~~See Tables 5.3.2, ~~&~~ 5.II.3.2 and 5.IV.3.1
Material Testing	See Note 4.
~~Admixtures~~Assumed lower bound concrete compressive strength after a significant thermal event	~~Deleted~~50% of nominal value prior to the thermal event
Maximum Water to Cement Ratio	0.5 (Table 4.5.2)
Maximum Water~~-~~-Soluble Chloride Ion Cl in Concrete	1.00 percent by weight of cement (Table 4.5.4) (See Table 1.D.2, Note 1)
~~Concrete Quality~~	~~Deleted~~
Mixing and Placing	See Note 6.
~~Consolidation~~	~~Deleted~~
Quality Assurance	Per Holtec Quality Assurance Manual, 10 CFR Part 72, Appendix G commitments
~~Through-Thickness~~Cross Section Average~~‡~~ Temperature Limit Under Long Term	300°F ~~(See Note 3)~~

~~‡ The through-thickness section average is the same quantity as that defined in Paragraph A.4.3 of Appendix A to ACI 349 as the mean temperature distribution. A formula for determining this value, consistent with the inner and outer surface averaging used in this FSAR, is presented in Figure A-1 of the commentary on ACI 349. Use of this quantity as an acceptance criterion is, therefore, in accordance with the governing ACI code.~~

Conditions	
Local Temperature Limit Under 30-Day 100% Vent Blockage Accident Conditions	See Table 2.2.3 in this FSAR and similar tables in other HI-STORM FSARs
Local ~~Temperature~~ Temperature Limit Under Short Term, Off Normal, and Accident Conditions (Note 9)	See Table 2.2.3 in this FSAR and similar tables in other HI-STORM FSARs
~~Aggregate Maximum Value of Coefficient of Thermal Expansion (tangent in the range of 70°F to 100°F)~~	~~6E-06 inch/inch/°F (See Note 1) (NUREG-1536, 3.V.2.b.i.(2)(c)2.b)~~

Notes:

~~1. The following aggregate types are a priori acceptable: limestone, marble, basalt, granite, gabbro, rhyolite, hematite, magnetite, or barite. Careful consideration shall be given to the potential of long-term degradation of concrete due to chemical reactions between the aggregate and cement selected for HI-STORM overpack concrete.~~

1. Density values used in the safety analysis of the different overpacks may be greater than the minimums provided in this table and are pre-empted by those set down in Chapter 5 of the applicable FSAR.

2. The coarse aggregate shall meet the requirements of ASTM C33 for class designation 1S from Table 3. However, if the requirements of ASTM C33 cannot be met, concrete aggregates that have been shown by special tests or actual service to produce concrete of adequate strength, unit weight, and durability meeting the requirements of Tables 1.D.1 and 1.D.2 are acceptable in accordance with ACI 349 Section 3.3.2. The high-density coarse aggregate percentage of Material Finer than No. 200 Sieve may be increased to 10-% if the material is essentially free of clay or shale.

~~3. The 300°F long term temperature limit is specified in accordance with Paragraph A.4.3 of Appendix A to ACI 349 for normal conditions considering the very low maximum stresses calculated and discussed in Section 3.4 of this FSAR for normal conditions. In accordance with this paragraph of the governing code, the specified concrete compressive strength is supported by test data and the concrete is shown not to deteriorate, as evidenced by a lack of reduction in concrete density or durability.~~

3. The listed value of thermal conductivity is a lower bound and is considered to be acceptable *a' priori* as in most cases it would likely be exceeded [1.D.7]. A higher conductivity of plain concrete may be used in a site-specific safety qualification if supported by appropriate conduction tests. The conductivity value used in Chapter 4 controls and must be demonstrated for a site-specific application by testing.

4. Tests of materials and concrete, as required, shall be made in accordance with standards of the American Society for Testing and Materials (ASTM) ~~as specified here,~~ to ensure that the *critical characteristics* for the HI-STORM concrete are achieved. ~~ASTM Standards to be used include: C 31, C 33, C 39, C 88, C 131, C 138, C 143, C 150, C 172, C 192, C 494, C 637. Equivalent standards may be approved for use after a 10CFR72.48 safety evaluation by Holtec.~~

5. The compressive strength of HI-STORM concrete is used in determining the extent of penetration into the cask by a medium or small Design Basis Missile treated in this FSAR. For sites subject to more severe missiles, the minimum concrete strength may be increased, as necessary, to meet site specific requirements. Lower than the reference strength is seldom required to improve safety margins at a site; however, if required, a lower concrete

compressive strength than the nominal value in the table may be employed with ~~Holtec structural engineering~~Certificate holder's approval.

6. Water and admixtures may be added at ~~the job~~a site as specified in the ~~procedure~~HSP-170 to bring both the slump and wet unit weight of the concrete within the mix design limits. The tolerance for individual and combined aggregate weights in the concrete batch may be outside of tolerances specified in ASTM C94, provided that the wet unit weight of the concrete is tested prior to placement and confirmed to be within the approved range.

7. Equivalent standards may be approved for use after a 10CFR72.48 evaluation by the Certificate Holder considering the effect on the *critical characteristics*.

8. The highest planar cross-section average temperature in the vertical overpack must not exceed the limit set down in this table.

Table 1.D.2: Reference specifications for testing of HI-STORM concrete (see notes below)	
TEST	**SPECIFICATION**
Compression Test	ASTM C31, ASTM C39, ASTM C192
Unit Weight (Density)	ASTM C138
Maximum Water- Soluble Chloride Ion Concentration	ASTM C1218 (See Note 1)

Notes:

1. If the concrete or concrete aggregates are suspected of containing excessive amounts of chlorides, they will be tested to ensure that their contribution will not cause the water-soluble chloride concentration to exceed the required maximum. Factors to be considered will consist of the source of the aggregates (proximity to a salt water source, brackish area, etc.) and service history of the concrete made from aggregates originating from the same source. No specific tests are required unless the aggregates or water source are suspected of containing an excessive concentration of chloride ions.

2. Equivalent standards may be approved for use after a 10CFR72.48 safety evaluation by the Certificate Holder considering effect on the critical characteristics.

Table 1.D.3~~: Required Properties of Shielding Enhancer Additives ("Aggregate")~~ : **Generic Checklist for evaluating shielding enhancer materials**	
~~**ITEM**~~	~~**REQUIRED PROPERTY**~~
1	The Aggregate does not chemically react extensively with the other constituents in the concrete.
2	The concrete meets the minimum compressive strength requirement specified for the specific HI-STORM application.
3	The Aggregate remains physically stable at the maximum permissible normal and short- term temperatures set down in Table 1.D.1.
4	The maximum Aggregate size is bounded by the limit in Table 1.D.1.
5	The concrete mixing process is qualified to ensure the additive aggregate is evenly distributed with a maximum permissible distribution difference of 10%.

criteria for the SCS are provided in Appendix 2.C. The HI-TRAC water jacket maximum allowable temperature is a function of the internal pressure. To preclude over pressurization of the water jacket due to boiling of the neutron shield liquid (water), the maximum temperature of the water is limited to less than the saturation temperature at the shell design pressure. In addition, the water is precluded from freezing during off-normal cold conditions by limiting the minimum allowable temperature, ~~and~~ adding ethylene glycol, or controlling the MPC heat load. The thermal characteristics of the fuel for each MPC for which the transfer cask is designed are defined in Section 2.1.6. The working area ambient temperature limit for loading operations is limited in accordance with the design criteria established for the transfer cask.

Shielding

The HI-TRAC transfer cask provides shielding to maintain occupational exposures ALARA in accordance with 10CFR20, while also maintaining the maximum load on the plant's crane hook to below either 125 tons or 100 tons, or less, depending on whether the HI-TRAC 125 or HI-TRAC 100 transfer cask is utilized. The HI-TRAC calculated dose rates are reported in Section 5.1. These dose rates are used to perform a generic occupational exposure estimate for MPC loading, closure, and transfer operations, as described in Chapter 10. A postulated HI-TRAC accident condition, which includes the loss of the liquid neutron shield (water), is also evaluated in Section 5.1.2. In addition,

HI-TRAC dose rates are controlled in accordance with plant-specific procedures and ALARA requirements (discussed in Chapter 10).

The HI-TRAC 125 and 125D provide better shielding than the HI-TRAC 100, 100D, or 100G. Provided the licensee is capable of utilizing the 125-ton HI-TRAC, ALARA considerations would normally dictate that the 125-ton HI-TRAC should be used. However, sites may not be capable of utilizing the 125-ton HI-TRAC due to crane capacity limitations, floor loading limits, or other site-specific considerations. As with other dose reduction-based plant activities, individual users who cannot accommodate the 125-ton HI-TRAC should perform a cost-benefit analysis of the actions (e.g., modifications), which would be necessary to use the 125-ton HI-TRAC. The cost of the action(s) would be weighed against the value of the projected reduction in radiation exposure and a decision made based on each plant’s particular ALARA implementation philosophy.

The HI-TRAC provides a means to isolate the annular area between the MPC outer surface and the HI-TRAC inner surface to minimize the potential for surface contamination of the MPC by spent fuel pool water during wet loading operations. The HI-TRAC surfaces expected to require decontamination are coated. The maximum permissible surface contamination for the HI-TRAC is in accordance with plant-specific procedures and ALARA requirements (discussed in Chapter 10).

Confinement

The HI-TRAC transfer cask does not perform any confinement function. Confinement during MPC transfer operations is provided by the MPC, and is addressed in Chapter 7. The HI-TRAC provides physical protection and biological shielding for the MPC confinement boundary during MPC closure

Table 2.0.1 (continued)
MPC DESIGN CRITERIA SUMMARY

Type	Criteria	Basis	FSAR Reference
Leak Testing:			
Welds Tested	MPC shell to shell and MPC shell to baseplate welds (Fabrication). Port covers-to-MPC lid (field) (not required when the redundant port cover design is used)	ISG-25 ISG-18	Section 9.1
Base Metals Tested	MPC shell, MPC baseplate, MPC lid (Fabrication). MPC vent and drain port cover plates (Field).	ISG-25	Section 9.1
Medium	Helium	ANSI N14.5	Section 9.1
Max. Leak Rate	Leaktight	ANSI N14.5	Section 9.1
Monitoring System	None	10CFR72.128(a)(1)	Section 2.3.2.1
Pressure Testing (if specified):			
Minimum Test Pressure	125 psig (hydrostatic) 120 psig (pneumatic)	-	Governing requirements are specified in Sections 8.1 and 9.1
Welds Tested	MPC Lid-to-Shell, MPC Shell seams, MPC Shell-to-Baseplate	-	Sections 8.1 and 9.1-
Medium	Water or helium	-	Section 8.1 and Chapter 9-
Retrievability:			
Normal and Off-normal:	No Encroachment on Fuel Assemblies	10CFR72.122(f) & (l)	Sections 3.4 and 3.1.2
Post (design basis) Accident			
Criticality:		10CFR72.124 & 10CFR72.236(c)	
Method of Control	Fixed Borated Neutron Absorber, Geometry, and Soluble Boron	-	Section 2.3.4

2.1.6 Thermal Parameters for Design Basis SNF

The principal thermal design parameter for the stored fuel is the peak fuel cladding temperature, which is a function of the maximum heat generation rate per assembly and the decay heat removal capabilities of the HI-STORM 100 System. No attempt is made to link the maximum allowable decay heat per fuel assembly with burnup, enrichment, or cooling time. Rather, the decay heat per fuel assembly is adjusted to yield peak fuel cladding temperatures with an allowance for margin to the temperature limit.

To ensure the permissible fuel cladding temperature limits are not exceeded, Section 2.1.9 specifies the allowable decay heat per assembly for each MPC model. For both uniform and regionalized loading of moderate and high burnup fuel assemblies, the allowable decay heat per assembly is presented in Section 2.1.9.

~~Section 2.1.9 also includes separate cooling time, burnup, and decay heat limits for uniform fuel loading and regionalized fuel loading.~~ Regionalized loading allows higher heat emitting fuel assemblies to be stored in the center fuel storage locations than would otherwise be authorized for storage under uniform loading conditions.

The fuel cladding temperature is also affected by the heat transfer characteristics of the fuel assemblies. The bounding fuel assembly design for thermal calculations for each fuel type is provided in Table 2.1.5.

Finally, the axial variation in the heat generation rate in the design basis fuel assembly is defined based on the axial burnup distribution. For this purpose, the data provided in Refs. [2.1.7] and [2.1.8] are utilized and summarized in Table 2.1.11 and Figures 2.1.3 and 2.1.4 for reference. These distributions are representative of fuel assemblies with the design basis burnup levels considered. These distributions are used for analyses only, and do not provide a criteria for fuel assembly acceptability for storage in the HI-STORM 100 System.

Except for MPC-68F, fuel may be stored in the MPC using one of two storage strategies, namely, uniform loading and regionalized loading. Uniform loading allows storage of any fuel assembly in any fuel storage location, subject to additional restrictions, such as those for loading of fuel assemblies containing non-fuel hardware as defined in the glossary. Regionalized fuel loading allows for higher heat emitting fuel assemblies to be stored in some storage locations with lower heat emitting fuel assemblies in the remaining fuel storage locations. Regionalized loading allows storage of higher heat emitting fuel assemblies than would otherwise be permitted using the uniform loading strategy. The definition of the regions for each MPC model is provided in Table 2.1.27. Regionalized fuel loading is not permitted in MPC-68F.

2.1.7 Radiological Parameters for Design Basis SNF

The principal radiological design criteria for the HI-STORM 100 System are the 10CFR72.104 site boundary dose rate limits and maintaining operational dose rates as low as reasonably achievable (ALARA). The radiation dose is directly affected by the gamma and neutron source terms of the

SNF assembly.

The gamma and neutron sources are separate and are affected differently by enrichment, burnup, and cooling time. It is recognized that, at a given burnup, the radiological source terms increase monotonically as the initial enrichment is reduced. The shielding design basis fuel assembly, therefore, is evaluated at conservatively high burnups, low cooling times, and low enrichments, as discussed in Chapter 5. The shielding design basis fuel assembly thus bounds all other fuel assemblies.

The design basis dose rates can be met by a variety of burnup levels and cooling times. Section 2.1.9 provides the ~~procedure for determining~~ burnup and cooling time limits for all of the authorized fuel assembly array/classes for both uniform fuel loading and regionalized loading. Table 2.1.11 and Figures 2.1.3 and 2.1.4 provide the axial distribution for the radiological source terms for PWR and BWR fuel assemblies based on the axial burnup distribution. The axial burnup distributions are representative of fuel assemblies with the design basis burnup levels considered. These distributions are used for analyses only, and do not provide a criteria for fuel assembly acceptability for storage in the HI-STORM 100 System.

Thoria rods placed in Dresden Unit 1 Thoria Rod Canisters meeting the requirements of Table 2.1.12 and Dresden Unit 1 fuel assemblies with one Antimony-Beryllium neutron source have been qualified for storage. Up to one Thoria Rod Canister is authorized for storage in combination with other intact and damaged fuel, and fuel debris as specified in Section 2.1.9.

Non-fuel hardware, as defined in the glossary, has been evaluated and is authorized for storage in the PWR MPCs as specified in Section 2.1.9.

2.1.8 Criticality Parameters for Design Basis SNF

As discussed earlier, the MPC-68, MPC-68F, MPC-68FF, MPC-32 and MPC-32F feature a basket without flux traps. In the aforementioned baskets, there is one panel of neutron absorber between two adjacent fuel assemblies. The MPC-24, MPC-24E, and MPC-24EF employ a construction wherein two neighboring fuel assemblies are separated by two panels of neutron absorber with a water gap between them (flux trap construction).

The minimum ^{10}B areal density in the neutron absorber panels for each MPC model is shown in Table 2.1.15.

For all MPCs, the ^{10}B areal density used for the criticality analysis is conservatively established below the minimum values shown in Table 2.1.15. For Boral, the value used in the analysis is 75% of the minimum value, while for METAMIC, it is 90% of the minimum value. This is consistent with NUREG-1536 [2.1.5] which suggests a 25% reduction in ^{10}B areal density credit when subject to standard acceptance tests, and which allows a smaller reduction when more comprehensive tests of the areal density are performed.

The criticality analyses for the MPC-24, MPC-24E and MPC-24EF (all with higher enriched fuel) and for the MPC-32 and MPC-32F were performed with credit taken for soluble boron in the MPC

(ii) Calculate q_2 using the following equation:

$$q_2 = \frac{2 \times Q_d}{\left(1 + X^y\right) \times \left(n_1 \times X + n_2\right)} \qquad \text{Equation h}$$

where:

$y = 0.23/X^{0.1}$
q_2 = Maximum allowable decay heat per fuel storage location in Region 2 (kW)
Q_d= Maximum uniform storage MPC decay heat (34 kW)
X = Ratio of q_1 to q_2 chosen in Step (i)
n_1 = Number of fuel storage locations in Region 1 from Table 2.1.27
n_2 = Number of fuel storage locations in Region 2 from Table 2.1.27

(iii) Calculate q_1 using the following equation:

$$q_1 = X \times q_2 \qquad \text{Equation i}$$

Using the steps provided above we find for X=2 that q_1 = 1.43 kW and q_2 = 0.715 kW for MPC-32. The user can follow Table 2.1.30 for discrete values of X to determine q_1 and q_2 or calculate q_1 and q_2 for a specific value of X using the steps above. It should be noted that equation e is used to determine Q_{CoC} when following the heat load limits for regionalized loading.

It should be emphasized that the variable two-region scheme of storage does not introduce any new complication in the dry storage implementation. As compared to uniform loading in MPC-32, where q = 1.0625 kW for all cells, the regionalized loading gives the user the flexibility to load the MPC with more varying heat loads. It is noted that for X < 1 Q_{CoC} is greater than Q_d, for X = 1 Q_{CoC} equals Q_d, and for X >1 Q_{CoC} is less than Q_d. For ALARA and regardless of which loading pattern is used, a plant should always seek to preferentially locate the fuel with the higher heat loads toward the center of the MPC. If the need arises to place younger fuel into dry storage a regionalized pattern with X <1 may be more appropriate.

2.1.9.1.3 Burnup Limits as a Function of Cooling Time for ZR-Clad Fuel

The maximum allowable ZR-clad fuel assembly average burnup varies with the minimum required fuel assembly cooling time~~following parameters~~, based on the shielding analysis in Chapter 5.~~:~~ Tables 2.1.28 and 2.1.29 provide for each MPC

- ~~Minimum required fuel assembly cooling time~~
- ~~Maximum allowable fuel assembly decay heat~~
- ~~Minimum fuel assembly average enrichment~~

~~The calculation described in this section is used to determine the maximum allowable fuel assembly burnup for minimum cooling times between 2 and 40 years, using maximum decay heat and minimum enrichment as input values. This calculation may be used to create multiple burnup versus cooling time tables for a particular fuel assembly array/class and different minimum enrichments. T~~ the allowable maximum burnup ~~for a specific fuel assembly may be calculated~~ based on the

assembly's particular ~~enrichment and~~ cooling time.

~~(i) Choose a fuel assembly minimum enrichment, E_{235}.~~

~~(ii) Calculate the maximum allowable fuel assembly average burnup for a minimum cooling time between 2 and 40 years using the equation below:~~

~~$Bu = (A \times q) + (B \times q^2) + (C \times q^3) + [D \times (E_{235})^2] + (E \times q \times E_{235}) + (F \times q^2 \times E_{235}) + G$~~

~~Equation j~~

~~Where:~~

~~Bu = Maximum allowable assembly average burnup (MWD/MTU)~~

~~q = Maximum allowable decay heat per fuel storage location determined in Section 2.1.9.1.1 or 2.1.9.1.2 (kW)~~

~~E_{235} = Minimum fuel assembly average enrichment (wt. % ^{235}U) (e.g., for 4.05 wt. %, use 4.05)~~

~~A through G = Coefficients from Tables 2.1.28 or 2.1.29 for the applicable fuel assembly array/class and minimum cooling time.~~

2.1.9.1.4 Other Considerations

In computing the allowable maximum fuel storage location decay heats and fuel assembly average burnups, the following requirements apply:

- Linear interpolation of burnups between cooling times is permitted. For example, the allowable burnup for a minimum cooling time of 4.5 years may be interpolated between those burnups calculated for 4 and 5 years.
- Calculated burnup limits shall be rounded down to the nearest integer
- Calculated burnup limits greater than 68,200 MWD/MTU for PWR fuel and 65,000 MWD/MTU for BWR fuel must be reduced to be equal to these values.
- ~~Linear interpolation of calculated burnups between cooling times for a given fuel assembly maximum decay heat and minimum enrichment is permitted. For example, the allowable burnup for a minimum cooling time of 4.5 years may be interpolated between those burnups calculated for 4 and 5 years.~~
- ~~ZR-clad fuel assemblies must have a minimum enrichment, as defined in the glossary, greater than or equal to the value used in determining the maximum allowable burnup per~~

~~Section 2.1.9.1.3 to be authorized for storage in the MPC.~~

- When complying with the maximum fuel storage location decay heat limits, users must account for the decay heat from both the fuel assembly and any PWR non-fuel hardware, as applicable for the particular fuel storage location, to ensure the decay heat emitted by all contents in a storage location does not exceed the limit.

- There are two options for helium backfill range (shown in Table 1.2.2). The lower helium backfill range has different per cell heat load limits given in Table 2.1.31.

Section 12.2.10 provides a practical example of determining fuel storage location decay heat, burnup, and cooling time limits and verifying compliance for a set of example fuel assemblies.

2.1.9.1.5 Supplemental Cooling Threshold Heat Loads

Fuel loading operations involving the handling of High Burnup Fuel (HBF) in a dewatered MPC emplaced in a HI-TRAC transfer cask require additional cooling under certain thermal loads to address reduced heat dissipation relative to the normal storage condition. To address this requirement the Supplemental Cooling System (SCS) defined in Appendix 2.C is mandated under threshold heat loads defined in Section 4.5 and Table 2.1.30. The specific design of a SCS must accord with site-specific needs and resources, including the availability of plant utilities. However, a set of specifications to ensure that the performance objectives of the SCS are satisfied by plant-specific designs are set forth in Appendix 2.C.

Table 2.1.28
PWR FUEL ASSEMBLY BURNUP AND COOLING TIME ~~DEPENDENT COEFFICIENTS~~ LIMITS
(ZR-CLAD FUEL)

Minimum Cooling Time (years)	**Maximum Allowable Burnup, MWd/mtU**
MPC-24/24E/24EF	
1.0	5,000
1.4	15,000
1.8	25,000
2.0	35,000
2.2	40,000
2.4	45,000
2.6	50,000
2.8	55,000
3.0	60,000
4.0	69,000
5.0	75,000
MPC-32/32F	
1.0	5,000
1.4	10,000
1.8	20,000
2.0	25,000
2.2	30,000
2.4	35,000
2.6	40,000
3.0	45,000
4.0	60,000
5.0	69,000

Table 2.1.29
BWR FUEL ASSEMBLY BURNUP AND COOLING TIME LIMITS
(ZR-CLAD FUEL)

Minimum Cooling Time (years)	**Maximum Allowable Burnup, MWd/mtU**
MPC-68/68FF	
1.0	10,000
1.2	15,000
1.4	20,000
2.0	25,000
2.2	30,000
2.4	35,000
2.6	40,000
3.0	50,000
4.0	62,000
5.0	65,000
6.0	70,000

~~Cooling Time (years)~~	~~Array/Class 14x14A~~						
	~~A~~	~~B~~	~~C~~	~~D~~	~~E~~	~~F~~	~~G~~
~~2.0~~	~~8716.89~~	~~1454.67~~	~~-91.96~~	~~-168.45~~	~~2047.50~~	~~-209.91~~	~~-738.51~~
~~2.25~~	~~10917.50~~	~~1441.49~~	~~-112.76~~	~~-162.14~~	~~2274.96~~	~~-266.46~~	~~-788.45~~
~~2.5~~	~~13452.90~~	~~1258.44~~	~~-119.69~~	~~-154.08~~	~~2491.83~~	~~-329.35~~	~~-760.18~~
~~2.75~~	~~16326.90~~	~~847.56~~	~~-100.72~~	~~-146.46~~	~~2680.07~~	~~-390.55~~	~~-727.50~~
~~3.0~~	~~19310.30~~	~~276.56~~	~~-59.30~~	~~-139.52~~	~~2851.81~~	~~-452.00~~	~~-614.85~~
~~4.0~~	~~33007.90~~	~~-4711.82~~	~~663.64~~	~~-117.16~~	~~3291.32~~	~~-622.31~~	~~-338.63~~
~~5.0~~	~~46306.70~~	~~-12448.80~~	~~2292.51~~	~~-113.20~~	~~3504.56~~	~~-662.41~~	~~-73.12~~
~~6.0~~	~~57461.80~~	~~-20693.50~~	~~4405.17~~	~~-121.14~~	~~3633.52~~	~~-614.82~~	~~1.66~~
~~7.0~~	~~66450.10~~	~~-28314.10~~	~~6635.00~~	~~-129.61~~	~~3706.00~~	~~-510.84~~	~~-113.74~~

~~8.0~~	~~73652.70~~	~~-34919.90~~	~~8759.36~~	~~-136.91~~	~~3752.43~~	~~-391.36~~	~~-311.56~~
~~9.0~~	~~79378.80~~	~~-40316.60~~	~~10606.30~~	~~-141.55~~	~~3784.66~~	~~-280.29~~	~~-485.97~~
~~10.0~~	~~84125.10~~	~~-44860.80~~	~~12239.70~~	~~-143.00~~	~~3777.62~~	~~-152.58~~	~~-635.70~~
~~11.0~~	~~88066.60~~	~~-48540.60~~	~~13594.30~~	~~-142.74~~	~~3758.54~~	~~-33.78~~	~~-726.86~~
~~12.0~~	~~91416.80~~	~~-51619.90~~	~~14789.00~~	~~-141.31~~	~~3742.31~~	~~64.80~~	~~-833.14~~
~~13.0~~	~~94657.90~~	~~-54579.30~~	~~15916.70~~	~~-137.14~~	~~3652.04~~	~~215.05~~	~~-967.41~~
~~14.0~~	~~97332.40~~	~~-56854.80~~	~~16823.50~~	~~-133.83~~	~~3610.21~~	~~315.79~~	~~-959.48~~
~~15.0~~	~~99866.10~~	~~-58816.70~~	~~17560.80~~	~~-128.68~~	~~3529.41~~	~~430.14~~	~~-991.32~~
~~16.0~~	~~102093.00~~	~~-60412.40~~	~~18171.30~~	~~-124.64~~	~~3469.67~~	~~535.07~~	~~-1078.73~~
~~17.0~~	~~104419.00~~	~~-62150.90~~	~~18846.80~~	~~-118.62~~	~~3363.97~~	~~674.13~~	~~-1092.27~~
~~18.0~~	~~106439.00~~	~~-63357.20~~	~~19259.50~~	~~-114.31~~	~~3300.43~~	~~769.38~~	~~-1137.26~~
~~19.0~~	~~108613.00~~	~~-64655.80~~	~~19660.70~~	~~-107.71~~	~~3182.61~~	~~904.63~~	~~-1084.05~~
~~20.0~~	~~110475.00~~	~~-65506.20~~	~~19883.50~~	~~-103.32~~	~~3125.81~~	~~988.08~~	~~-1062.86~~
~~22.0~~	~~114223.00~~	~~-66854.40~~	~~19969.00~~	~~-91.34~~	~~2899.19~~	~~1260.81~~	~~-1076.58~~
~~24.0~~	~~117822.00~~	~~-67556.70~~	~~19641.80~~	~~-79.56~~	~~2684.32~~	~~1499.23~~	~~-1011.23~~
~~26.0~~	~~121396.00~~	~~-67752.70~~	~~18783.80~~	~~-68.61~~	~~2465.91~~	~~1753.65~~	~~-940.82~~
~~28.0~~	~~125040.00~~	~~-67445.30~~	~~17353.90~~	~~-55.51~~	~~2184.99~~	~~2059.27~~	~~-883.36~~
~~30.0~~	~~128075.00~~	~~-65562.60~~	~~14994.70~~	~~-45.58~~	~~2003.10~~	~~2244.12~~	~~-819.25~~
~~35.0~~	~~136419.00~~	~~-58633.40~~	~~6027.48~~	~~-15.81~~	~~1354.94~~	~~2757.84~~	~~-687.83~~
~~40.0~~	~~144776.00~~	~~-48670.50~~	~~-4898.54~~	~~5.02~~	~~1019.97~~	~~2652.57~~	~~-507.64~~

~~Table 2.1.28 (cont'd)~~
~~PWR FUEL ASSEMBLY COOLING TIME-DEPENDENT COEFFICIENTS~~
~~(ZR-CLAD FUEL)~~

~~Cooling Time (years)~~	~~Array/Class 14x14B~~						
	~~A~~	~~B~~	~~C~~	~~D~~	~~E~~	~~F~~	~~G~~
~~2.0~~	~~7962.04~~	~~1332.84~~	~~-83.96~~	~~-165.28~~	~~1836.65~~	~~-176.15~~	~~-859.65~~
~~2.25~~	~~10055.50~~	~~1296.32~~	~~-100.51~~	~~-156.80~~	~~2012.11~~	~~-217.67~~	~~-907.11~~
~~2.5~~	~~12332.50~~	~~1153.20~~	~~-110.56~~	~~-149.42~~	~~2185.46~~	~~-264.52~~	~~-845.06~~
~~2.75~~	~~15072.80~~	~~715.71~~	~~-82.42~~	~~-140.68~~	~~2336.22~~	~~-310.64~~	~~-833.26~~
~~3.0~~	~~18034.30~~	~~-64.77~~	~~-24.88~~	~~-130.87~~	~~2450.80~~	~~-348.00~~	~~-857.34~~
~~4.0~~	~~30007.50~~	~~-4046.37~~	~~538.96~~	~~-110.22~~	~~2792.92~~	~~-469.98~~	~~-371.81~~
~~5.0~~	~~41033.00~~	~~-9824.17~~	~~1644.13~~	~~-108.10~~	~~2979.87~~	~~-509.22~~	~~122.91~~
~~6.0~~	~~50398.10~~	~~-16082.00~~	~~3115.79~~	~~-113.75~~	~~3084.72~~	~~-485.25~~	~~117.44~~
~~7.0~~	~~57782.60~~	~~-21657.00~~	~~4602.39~~	~~-121.19~~	~~3161.16~~	~~-433.49~~	~~-112.57~~
~~8.0~~	~~63670.20~~	~~-26431.00~~	~~6006.16~~	~~-127.70~~	~~3227.81~~	~~-382.20~~	~~-74.84~~
~~9.0~~	~~68390.50~~	~~-30359.70~~	~~7246.09~~	~~-131.82~~	~~3277.23~~	~~-336.08~~	~~-200.60~~
~~10.0~~	~~72284.50~~	~~-33630.50~~	~~8335.68~~	~~-132.71~~	~~3293.15~~	~~-279.98~~	~~-291.73~~
~~11.0~~	~~75584.30~~	~~-36387.10~~	~~9298.07~~	~~-132.38~~	~~3295.07~~	~~-227.50~~	~~-340.65~~
~~12.0~~	~~78425.20~~	~~-38681.30~~	~~10125.90~~	~~-130.36~~	~~3283.13~~	~~-176.12~~	~~-462.22~~
~~13.0~~	~~80928.60~~	~~-40624.70~~	~~10848.10~~	~~-127.28~~	~~3259.89~~	~~-127.73~~	~~-563.09~~
~~14.0~~	~~83136.90~~	~~-42279.70~~	~~11500.20~~	~~-124.50~~	~~3249.69~~	~~-97.40~~	~~-565.79~~
~~15.0~~	~~85398.00~~	~~-44023.70~~	~~12192.30~~	~~-119.64~~	~~3186.24~~	~~-30.11~~	~~-665.54~~
~~16.0~~	~~87257.50~~	~~-45137.70~~	~~12617.40~~	~~-113.94~~	~~3127.01~~	~~-22.40~~	~~-678.95~~
~~17.0~~	~~89196.20~~	~~-46520.30~~	~~13209.90~~	~~-110.27~~	~~3091.45~~	~~-63.17~~	~~-713.69~~
~~18.0~~	~~90991.80~~	~~-47570.50~~	~~13623.80~~	~~-104.55~~	~~3008.16~~	~~136.69~~	~~-772.63~~
~~19.0~~	~~92591.90~~	~~-48339.00~~	~~13957.70~~	~~-99.63~~	~~2967.34~~	~~161.34~~	~~-697.42~~
~~20.0~~	~~94285.30~~	~~-49165.00~~	~~14265.20~~	~~-93.25~~	~~2875.59~~	~~235.94~~	~~-721.92~~
~~22.0~~	~~97593.80~~	~~-50692.00~~	~~14904.40~~	~~-82.77~~	~~2745.24~~	~~324.79~~	~~-695.61~~
~~24.0~~	~~100677.00~~	~~-51565.30~~	~~15201.30~~	~~-71.53~~	~~2596.73~~	~~409.91~~	~~-701.93~~
~~26.0~~	~~103715.00~~	~~-52185.40~~	~~15380.80~~	~~-60.88~~	~~2445.30~~	~~499.31~~	~~-581.96~~
~~28.0~~	~~106669.00~~	~~-52197.30~~	~~15136.20~~	~~-49.42~~	~~2276.34~~	~~582.57~~	~~-547.22~~

~~30.0~~	~~109832.00~~	~~-52431.30~~	~~15114.20~~	~~-38.14~~	~~2103.73~~	~~641.34~~	~~-544.99~~
~~35.0~~	~~116933.00~~	~~-49435.10~~	~~12742.20~~	~~-10.82~~	~~1691.80~~	~~667.30~~	~~-388.35~~
~~40.0~~	~~123932.00~~	~~-43775.70~~	~~9268.80~~	~~-15.25~~	~~1356.03~~	~~327.73~~	~~-339.10~~

~~Table 2.1.28 (cont'd)~~
~~PWR FUEL ASSEMBLY COOLING TIME-DEPENDENT COEFFICIENTS~~
~~(ZR-CLAD FUEL)~~

~~Cooling Time (years)~~	~~Array/Class 14x14C~~						
	~~A~~	~~B~~	~~C~~	~~D~~	~~E~~	~~F~~	~~G~~
~~2.0~~	~~7910.49~~	~~1566.52~~	~~-112.06~~	~~-173.92~~	~~1975.67~~	~~-202.57~~	~~-1582.61~~
~~2.25~~	~~10090.40~~	~~1516.08~~	~~-132.53~~	~~-164.22~~	~~2144.71~~	~~-245.91~~	~~-1586.24~~
~~2.5~~	~~12672.30~~	~~1230.85~~	~~-127.98~~	~~-154.40~~	~~2293.68~~	~~-288.88~~	~~-1526.05~~
~~2.75~~	~~15404.70~~	~~785.48~~	~~-103.88~~	~~-146.02~~	~~2435.58~~	~~-333.58~~	~~-1526.92~~
~~3.0~~	~~18263.20~~	~~174.52~~	~~-57.73~~	~~-138.13~~	~~2539.97~~	~~-369.83~~	~~-1372.54~~
~~4.0~~	~~30052.40~~	~~-3931.93~~	~~484.14~~	~~-116.91~~	~~2815.30~~	~~-467.36~~	~~-710.84~~
~~5.0~~	~~40995.00~~	~~-9796.91~~	~~1583.72~~	~~-113.09~~	~~2900.21~~	~~-451.56~~	~~-204.87~~
~~6.0~~	~~49804.50~~	~~-15620.10~~	~~2905.31~~	~~-119.64~~	~~2970.21~~	~~-399.85~~	~~-228.44~~
~~7.0~~	~~56671.50~~	~~-20724.30~~	~~4228.04~~	~~-129.87~~	~~3058.54~~	~~-347.83~~	~~-244.26~~
~~8.0~~	~~62114.70~~	~~-24957.40~~	~~5410.68~~	~~-135.49~~	~~3080.42~~	~~-267.82~~	~~-216.83~~
~~9.0~~	~~66532.70~~	~~-28492.00~~	~~6458.64~~	~~-138.92~~	~~3102.21~~	~~-196.64~~	~~-343.21~~
~~10.0~~	~~70257.00~~	~~-31538.30~~	~~7424.54~~	~~-139.96~~	~~3109.64~~	~~-131.37~~	~~-466.58~~
~~11.0~~	~~73240.40~~	~~-33856.10~~	~~8182.60~~	~~-139.49~~	~~3113.36~~	~~-77.52~~	~~-528.62~~
~~12.0~~	~~75830.10~~	~~-35829.20~~	~~8857.54~~	~~-137.30~~	~~3097.43~~	~~-23.81~~	~~-597.83~~
~~13.0~~	~~78304.00~~	~~-37697.30~~	~~9499.38~~	~~-132.64~~	~~3034.49~~	~~60.52~~	~~-690.28~~
~~14.0~~	~~80401.00~~	~~-39162.40~~	~~10022.20~~	~~-129.04~~	~~3004.11~~	~~112.39~~	~~-819.41~~
~~15.0~~	~~82413.50~~	~~-40565.20~~	~~10547.80~~	~~-125.00~~	~~2972.01~~	~~159.60~~	~~-815.35~~
~~16.0~~	~~84138.60~~	~~-41575.10~~	~~10920.50~~	~~-121.03~~	~~2935.91~~	~~206.01~~	~~-844.59~~
~~17.0~~	~~85994.20~~	~~-42654.40~~	~~11295.20~~	~~-113.82~~	~~2848.12~~	~~279.72~~	~~-924.47~~
~~18.0~~	~~87721.10~~	~~-43657.50~~	~~11664.00~~	~~-108.56~~	~~2775.07~~	~~353.35~~	~~-960.97~~
~~19.0~~	~~89122.20~~	~~-44109.80~~	~~11806.40~~	~~-103.94~~	~~2740.54~~	~~384.66~~	~~-864.21~~
~~20.0~~	~~90678.60~~	~~-44723.70~~	~~11996.00~~	~~-97.44~~	~~2648.86~~	~~459.77~~	~~-907.84~~
~~22.0~~	~~93894.70~~	~~-46071.00~~	~~12444.30~~	~~-85.57~~	~~2487.47~~	~~593.03~~	~~-912.09~~
~~24.0~~	~~96742.60~~	~~-46597.20~~	~~12482.60~~	~~-75.19~~	~~2358.14~~	~~688.79~~	~~-833.76~~
~~26.0~~	~~99697.50~~	~~-47055.90~~	~~12472.30~~	~~-63.23~~	~~2185.39~~	~~810.10~~	~~-803.84~~
~~28.0~~	~~102343.00~~	~~-46639.70~~	~~11970.90~~	~~-52.13~~	~~2038.03~~	~~893.63~~	~~-704.66~~

~~30.0~~	~~105173.00~~	~~-46148.00~~	~~11326.10~~	~~-41.21~~	~~1856.73~~	~~1002.71~~	~~-620.51~~
~~35.0~~	~~111963.00~~	~~-42828.60~~	~~8640.91~~	~~-13.96~~	~~1473.64~~	~~1063.44~~	~~-455.86~~
~~40.0~~	~~118574.00~~	~~-36526.50~~	~~4330.66~~	~~12.00~~	~~1111.29~~	~~892.32~~	~~-351.40~~

~~Table 2.1.28 (cont'd)~~
~~PWR FUEL ASSEMBLY COOLING TIME-DEPENDENT COEFFICIENTS~~
~~(ZR-CLAD FUEL)~~

~~Cooling Time (years)~~	~~Array/Class 15x15A/B/C~~						
	~~A~~	~~B~~	~~C~~	~~D~~	~~E~~	~~F~~	~~G~~
~~2.0~~	~~6771.99~~	~~897.63~~	~~-45.95~~	~~-155.96~~	~~1478.91~~	~~-112.57~~	~~-571.21~~
~~2.25~~	~~8543.84~~	~~862.70~~	~~-53.16~~	~~-148.35~~	~~1638.47~~	~~-142.90~~	~~-603.00~~
~~2.5~~	~~10454.10~~	~~757.88~~	~~-56.51~~	~~-143.91~~	~~1802.08~~	~~-178.39~~	~~-613.38~~
~~2.75~~	~~12589.40~~	~~536.75~~	~~-50.58~~	~~-136.31~~	~~1939.28~~	~~-212.48~~	~~-598.75~~
~~3.0~~	~~15043.50~~	~~106.18~~	~~-18.51~~	~~-127.37~~	~~2049.65~~	~~-242.76~~	~~-584.58~~
~~4.0~~	~~25256.40~~	~~-2809.40~~	~~320.40~~	~~-108.47~~	~~2382.23~~	~~-339.78~~	~~-246.30~~
~~5.0~~	~~34995.70~~	~~-7157.77~~	~~1037.70~~	~~-104.27~~	~~2547.85~~	~~-373.57~~	~~64.26~~
~~6.0~~	~~43079.90~~	~~-11755.40~~	~~1968.81~~	~~-110.42~~	~~2669.55~~	~~-367.08~~	~~207.73~~
~~7.0~~	~~49495.50~~	~~-15880.10~~	~~2915.99~~	~~-117.70~~	~~2745.06~~	~~-335.00~~	~~79.17~~
~~8.0~~	~~54674.20~~	~~-19541.50~~	~~3863.26~~	~~-124.97~~	~~2823.26~~	~~-307.52~~	~~-139.52~~
~~9.0~~	~~58746.90~~	~~-22465.30~~	~~4666.71~~	~~-128.88~~	~~2870.36~~	~~-274.05~~	~~-284.74~~
~~10.0~~	~~62159.00~~	~~-24900.00~~	~~5358.04~~	~~-129.81~~	~~2882.28~~	~~-231.65~~	~~-307.41~~
~~11.0~~	~~64980.00~~	~~-26916.40~~	~~5974.92~~	~~-128.99~~	~~2890.02~~	~~-197.70~~	~~-320.91~~
~~12.0~~	~~67449.80~~	~~-28657.30~~	~~6533.20~~	~~-126.96~~	~~2889.14~~	~~-168.72~~	~~-358.64~~
~~13.0~~	~~69587.80~~	~~-30096.10~~	~~7005.49~~	~~-125.03~~	~~2881.70~~	~~-138.49~~	~~-417.57~~
~~14.0~~	~~71617.00~~	~~-31412.90~~	~~7443.05~~	~~-120.37~~	~~2839.04~~	~~-95.47~~	~~-497.72~~
~~15.0~~	~~73320.90~~	~~-32442.90~~	~~7811.27~~	~~-117.59~~	~~2836.73~~	~~-78.55~~	~~-582.44~~
~~16.0~~	~~75078.70~~	~~-33504.10~~	~~8184.69~~	~~-111.70~~	~~2773.08~~	~~-28.70~~	~~-569.58~~
~~17.0~~	~~76605.90~~	~~-34256.30~~	~~8446.38~~	~~-106.43~~	~~2722.31~~	~~10.58~~	~~-648.37~~
~~18.0~~	~~78201.90~~	~~-35135.30~~	~~8779.71~~	~~-102.00~~	~~2687.99~~	~~34.04~~	~~-637.10~~
~~19.0~~	~~79683.00~~	~~-35825.50~~	~~9024.65~~	~~-96.68~~	~~2626.60~~	~~78.21~~	~~-644.17~~
~~20.0~~	~~81040.00~~	~~-36264.40~~	~~9175.96~~	~~-90.42~~	~~2571.71~~	~~105.53~~	~~-621.79~~
~~22.0~~	~~83842.80~~	~~-37347.80~~	~~9582.93~~	~~-79.77~~	~~2452.81~~	~~179.87~~	~~-678.83~~
~~24.0~~	~~86457.20~~	~~-37934.30~~	~~9779.99~~	~~-69.09~~	~~2348.63~~	~~223.29~~	~~-555.43~~
~~26.0~~	~~89143.70~~	~~-38488.40~~	~~9965.70~~	~~-58.22~~	~~2222.80~~	~~276.21~~	~~-541.65~~
~~28.0~~	~~91552.10~~	~~-38289.80~~	~~9775.89~~	~~-47.03~~	~~2083.59~~	~~328.54~~	~~-483.47~~

~~30.0~~	~~93976.80~~	~~-37775.30~~	~~9380.97~~	~~-35.17~~	~~1933.91~~	~~367.06~~	~~-412.13~~
~~35.0~~	~~99743.70~~	~~-35109.80~~	~~7937.17~~	~~-10.10~~	~~1701.23~~	~~242.55~~	~~-292.95~~
~~40.0~~	~~105747.00~~	~~-30710.40~~	~~5734.70~~	~~16.14~~	~~1409.70~~	~~-19.63~~	~~-330.25~~

~~Table 2.1.28 (cont'd)~~
~~PWR FUEL ASSEMBLY COOLING TIME-DEPENDENT COEFFICIENTS~~
~~(ZR-CLAD FUEL)~~

~~Cooling Time (years)~~	~~Array/Class 15x15D/E/F/H/I~~						
	~~A~~	~~B~~	~~C~~	~~D~~	~~E~~	~~F~~	~~G~~
~~2.0~~	~~6290.79~~	~~883.39~~	~~-49.29~~	~~-150.42~~	~~1348.67~~	~~-93.23~~	~~-194.84~~
~~2.25~~	~~7850.16~~	~~906.09~~	~~-62.37~~	~~-145.85~~	~~1507.07~~	~~-121.33~~	~~-234.20~~
~~2.5~~	~~9917.64~~	~~729.63~~	~~-57.61~~	~~-138.51~~	~~1649.34~~	~~-150.19~~	~~-389.61~~
~~2.75~~	~~12039.70~~	~~498.88~~	~~-50.28~~	~~-132.19~~	~~1776.46~~	~~-179.02~~	~~-384.86~~
~~3.0~~	~~14308.20~~	~~140.88~~	~~-27.37~~	~~-126.11~~	~~1896.47~~	~~-208.80~~	~~-424.35~~
~~4.0~~	~~24246.40~~	~~-2585.64~~	~~274.38~~	~~-105.96~~	~~2197.31~~	~~-292.15~~	~~-98.88~~
~~5.0~~	~~33660.00~~	~~-6672.88~~	~~931.23~~	~~-104.57~~	~~2380.99~~	~~-330.06~~	~~323.27~~
~~6.0~~	~~41534.90~~	~~-11039.20~~	~~1790.84~~	~~-111.20~~	~~2485.37~~	~~-318.04~~	~~436.06~~
~~7.0~~	~~47737.40~~	~~-14940.00~~	~~2668.46~~	~~-119.75~~	~~2572.84~~	~~-293.94~~	~~394.87~~
~~8.0~~	~~52510.40~~	~~-18097.60~~	~~3446.19~~	~~-126.75~~	~~2647.38~~	~~-274.16~~	~~310.51~~
~~9.0~~	~~56484.50~~	~~-20845.30~~	~~4162.00~~	~~-129.08~~	~~2662.71~~	~~-225.75~~	~~158.84~~
~~10.0~~	~~59692.00~~	~~-23093.90~~	~~4799.05~~	~~-130.53~~	~~2692.07~~	~~-199.57~~	~~18.86~~
~~11.0~~	~~62307.70~~	~~-24865.90~~	~~5320.34~~	~~-130.34~~	~~2710.88~~	~~-176.52~~	~~-96.66~~
~~12.0~~	~~64497.20~~	~~-26247.00~~	~~5725.38~~	~~-127.89~~	~~2691.98~~	~~-137.42~~	~~-152.99~~
~~13.0~~	~~66473.70~~	~~-27479.90~~	~~6111.71~~	~~-124.64~~	~~2678.39~~	~~-110.34~~	~~-220.62~~
~~14.0~~	~~68322.50~~	~~-28605.10~~	~~6471.87~~	~~-120.12~~	~~2648.26~~	~~-78.83~~	~~-317.16~~
~~15.0~~	~~69880.10~~	~~-29416.90~~	~~6732.96~~	~~-115.83~~	~~2620.06~~	~~-52.26~~	~~-351.02~~
~~16.0~~	~~71504.30~~	~~-30337.40~~	~~7046.36~~	~~-110.89~~	~~2583.27~~	~~-22.60~~	~~-386.91~~
~~17.0~~	~~72938.30~~	~~-31008.00~~	~~7269.02~~	~~-105.81~~	~~2541.55~~	~~5.22~~	~~-421.21~~
~~18.0~~	~~74306.50~~	~~-31601.90~~	~~7471.26~~	~~-100.67~~	~~2498.95~~	~~31.67~~	~~-421.69~~
~~19.0~~	~~75649.10~~	~~-32149.50~~	~~7661.36~~	~~-95.47~~	~~2449.77~~	~~61.38~~	~~-439.23~~
~~20.0~~	~~76868.40~~	~~-32525.30~~	~~7793.09~~	~~-90.99~~	~~2421.09~~	~~73.14~~	~~-450.75~~
~~22.0~~	~~79592.40~~	~~-33604.00~~	~~8197.86~~	~~-78.90~~	~~2293.07~~	~~142.14~~	~~-486.11~~
~~24.0~~	~~81996.10~~	~~-34015.70~~	~~8295.91~~	~~-67.98~~	~~2173.93~~	~~196.55~~	~~-435.49~~
~~26.0~~	~~84232.50~~	~~-34067.60~~	~~8271.85~~	~~-57.61~~	~~2083.11~~	~~215.81~~	~~-374.64~~
~~28.0~~	~~86620.60~~	~~-34049.50~~	~~8171.94~~	~~-45.82~~	~~1954.61~~	~~249.73~~	~~-400.41~~
~~30.0~~	~~88983.60~~	~~-33826.80~~	~~8026.95~~	~~-34.27~~	~~1835.41~~	~~255.33~~	~~-353.18~~

~~35.0~~	~~94579.10~~	~~-31817.80~~	~~7120.43~~	~~-8.81~~	~~1596.94~~	~~131.34~~	~~-263.56~~
~~40.0~~	~~100058.00~~	~~-27653.80~~	~~5318.64~~	~~17.12~~	~~1355.45~~	~~-187.62~~	~~-273.88~~

~~Table 2.1.28 (cont'd)~~
~~PWR FUEL ASSEMBLY COOLING TIME-DEPENDENT COEFFICIENTS~~
~~(ZR-CLAD FUEL)~~

~~Cooling Time (years)~~	~~Array/Class 16x16A~~						
	~~A~~	~~B~~	~~C~~	~~D~~	~~E~~	~~F~~	~~G~~
~~2.0~~	~~7213.94~~	~~1062.48~~	~~-60.18~~	~~-163.16~~	~~1632.73~~	~~-137.39~~	~~-660.90~~
~~2.25~~	~~9068.86~~	~~1052.65~~	~~-73.90~~	~~-157.12~~	~~1812.61~~	~~-174.53~~	~~-682.57~~
~~2.5~~	~~11282.40~~	~~881.74~~	~~-74.10~~	~~-149.28~~	~~1970.43~~	~~-212.23~~	~~-710.99~~
~~2.75~~	~~13602.30~~	~~625.18~~	~~-68.06~~	~~-143.44~~	~~2124.68~~	~~-253.65~~	~~-734.52~~
~~3.0~~	~~16226.30~~	~~143.97~~	~~-32.51~~	~~-136.73~~	~~2255.52~~	~~-291.73~~	~~-699.79~~
~~4.0~~	~~27528.60~~	~~-3346.42~~	~~393.54~~	~~-115.66~~	~~2587.71~~	~~-397.43~~	~~-273.55~~
~~5.0~~	~~38357.70~~	~~-8605.59~~	~~1312.06~~	~~-110.58~~	~~2719.25~~	~~-409.35~~	~~60.77~~
~~6.0~~	~~47353.00~~	~~-14184.20~~	~~2511.45~~	~~-117.96~~	~~2810.98~~	~~-373.58~~	~~26.38~~
~~7.0~~	~~54492.70~~	~~-19227.40~~	~~3751.22~~	~~-126.74~~	~~2889.14~~	~~-321.58~~	~~-84.61~~
~~8.0~~	~~60159.30~~	~~-23487.00~~	~~4884.62~~	~~-133.44~~	~~2918.29~~	~~-242.53~~	~~-126.66~~
~~9.0~~	~~64663.30~~	~~-26994.20~~	~~5900.01~~	~~-137.02~~	~~2946.64~~	~~-181.25~~	~~-285.69~~
~~10.0~~	~~68346.00~~	~~-29851.40~~	~~6755.60~~	~~-138.49~~	~~2958.18~~	~~-120.30~~	~~-384.11~~
~~11.0~~	~~71361.10~~	~~-32184.10~~	~~7502.54~~	~~-138.40~~	~~2964.72~~	~~-68.91~~	~~-497.04~~
~~12.0~~	~~74014.20~~	~~-34136.30~~	~~8127.59~~	~~-135.73~~	~~2938.32~~	~~-7.78~~	~~-627.98~~
~~13.0~~	~~76326.40~~	~~-35820.10~~	~~8697.58~~	~~-132.72~~	~~2908.57~~	~~49.64~~	~~-715.32~~
~~14.0~~	~~78450.30~~	~~-37288.70~~	~~9197.21~~	~~-128.85~~	~~2871.70~~	~~104.32~~	~~-771.96~~
~~15.0~~	~~80439.10~~	~~-38636.00~~	~~9667.15~~	~~-124.14~~	~~2815.86~~	~~168.64~~	~~-851.14~~
~~16.0~~	~~82142.00~~	~~-39610.20~~	~~10013.20~~	~~-120.20~~	~~2790.66~~	~~203.72~~	~~-859.48~~
~~17.0~~	~~83886.70~~	~~-40590.10~~	~~10336.30~~	~~-114.04~~	~~2714.78~~	~~270.50~~	~~-870.62~~
~~18.0~~	~~85580.90~~	~~-41545.60~~	~~10677.80~~	~~-108.53~~	~~2648.66~~	~~332.69~~	~~-921.15~~
~~19.0~~	~~87028.10~~	~~-42030.60~~	~~10787.80~~	~~-102.57~~	~~2576.39~~	~~390.15~~	~~-880.17~~
~~20.0~~	~~88490.60~~	~~-42584.60~~	~~10956.70~~	~~-97.67~~	~~2529.96~~	~~430.91~~	~~-912.08~~
~~22.0~~	~~91586.50~~	~~-43770.60~~	~~11272.60~~	~~-85.21~~	~~2343.82~~	~~579.90~~	~~-878.01~~
~~24.0~~	~~94293.80~~	~~-44158.40~~	~~11248.70~~	~~-74.44~~	~~2224.40~~	~~656.22~~	~~-824.58~~
~~26.0~~	~~97086.50~~	~~-44420.30~~	~~11078.90~~	~~-62.82~~	~~2045.62~~	~~784.53~~	~~-737.98~~
~~28.0~~	~~99965.10~~	~~-44515.00~~	~~10777.60~~	~~-51.29~~	~~1871.32~~	~~897.77~~	~~-719.30~~

~~30.0~~	~~102352.00~~	~~-43418.60~~	~~9831.79~~	~~-40.46~~	~~1725.50~~	~~957.49~~	~~-626.62~~
~~35.0~~	~~109039.00~~	~~-40353.50~~	~~7075.81~~	~~-12.07~~	~~1286.03~~	~~1106.60~~	~~-531.72~~
~~40.0~~	~~115345.00~~	~~-34020.20~~	~~2448.15~~	~~13.49~~	~~928.92~~	~~963.44~~	~~-395.64~~

~~Table 2.1.28 (cont'd)~~
~~PWR FUEL ASSEMBLY COOLING TIME-DEPENDENT COEFFICIENTS~~
~~(ZR-CLAD FUEL)~~

~~Cooling Time (years)~~	~~Array/Class 17x17A/16x16B/C~~						
	~~A~~	~~B~~	~~C~~	~~D~~	~~E~~	~~F~~	~~G~~
~~2.0~~	~~7482.84~~	~~749.18~~	~~-32.06~~	~~-153.69~~	~~1490.54~~	~~-111.64~~	~~-301.94~~
~~2.25~~	~~9138.06~~	~~783.14~~	~~-45.73~~	~~-148.43~~	~~1678.27~~	~~-147.42~~	~~-271.38~~
~~2.5~~	~~11115.90~~	~~682.88~~	~~-49.46~~	~~-143.38~~	~~1855.10~~	~~-184.65~~	~~-248.90~~
~~2.75~~	~~13492.40~~	~~392.81~~	~~-34.32~~	~~-137.63~~	~~2018.42~~	~~-224.60~~	~~-364.95~~
~~3.0~~	~~15985.10~~	~~3.54~~	~~-9.05~~	~~-128.84~~	~~2149.50~~	~~-260.42~~	~~-263.00~~
~~4.0~~	~~27326.30~~	~~-3316.13~~	~~388.73~~	~~-110.89~~	~~2545.62~~	~~-376.10~~	~~-60.44~~
~~5.0~~	~~38630.20~~	~~-8729.17~~	~~1335.65~~	~~-109.86~~	~~2754.84~~	~~-407.49~~	~~244.70~~
~~6.0~~	~~48364.20~~	~~-14788.30~~	~~2652.90~~	~~-117.55~~	~~2878.88~~	~~-375.72~~	~~252.15~~
~~7.0~~	~~56144.10~~	~~-20415.70~~	~~4068.96~~	~~-128.12~~	~~2970.68~~	~~-312.43~~	~~-145.42~~
~~8.0~~	~~62319.20~~	~~-25122.10~~	~~5332.37~~	~~-133.94~~	~~2986.20~~	~~-212.65~~	~~-192.32~~
~~9.0~~	~~67097.40~~	~~-28916.30~~	~~6441.26~~	~~-139.07~~	~~3028.70~~	~~-142.12~~	~~-304.90~~
~~10.0~~	~~71141.80~~	~~-32210.80~~	~~7461.17~~	~~-140.60~~	~~3037.68~~	~~-63.75~~	~~-484.40~~
~~11.0~~	~~74293.50~~	~~-34623.40~~	~~8214.63~~	~~-140.16~~	~~3026.35~~	~~11.71~~	~~-567.89~~
~~12.0~~	~~77101.60~~	~~-36783.10~~	~~8922.19~~	~~-138.37~~	~~3008.48~~	~~83.17~~	~~-677.97~~
~~13.0~~	~~79705.10~~	~~-38760.90~~	~~9576.13~~	~~-134.21~~	~~2949.33~~	~~173.71~~	~~-820.83~~
~~14.0~~	~~81840.20~~	~~-40208.40~~	~~10063.30~~	~~-130.61~~	~~2915.99~~	~~236.79~~	~~-867.80~~
~~15.0~~	~~83845.30~~	~~-41560.10~~	~~10535.80~~	~~-126.12~~	~~2867.51~~	~~306.60~~	~~-940.08~~
~~16.0~~	~~85751.10~~	~~-42671.70~~	~~10876.60~~	~~-120.77~~	~~2799.15~~	~~386.28~~	~~-990.12~~
~~17.0~~	~~87613.20~~	~~-43744.30~~	~~11214.60~~	~~-114.75~~	~~2722.88~~	~~466.15~~	~~-1028.96~~
~~18.0~~	~~89198.60~~	~~-44487.50~~	~~11451.40~~	~~-110.00~~	~~2673.61~~	~~522.32~~	~~-974.28~~
~~19.0~~	~~90843.80~~	~~-45204.50~~	~~11637.70~~	~~-103.89~~	~~2591.93~~	~~602.99~~	~~-1048.14~~
~~20.0~~	~~92361.20~~	~~-45701.20~~	~~11710.50~~	~~-98.45~~	~~2507.40~~	~~689.65~~	~~-1034.50~~
~~22.0~~	~~95455.20~~	~~-46715.70~~	~~11886.10~~	~~-86.86~~	~~2353.10~~	~~835.28~~	~~-1006.44~~
~~24.0~~	~~98319.40~~	~~-46988.20~~	~~11622.80~~	~~-74.63~~	~~2169.86~~	~~995.06~~	~~-941.81~~
~~26.0~~	~~101240.00~~	~~-47039.80~~	~~11136.00~~	~~-62.32~~	~~1971.79~~	~~1168.97~~	~~-907.73~~
~~28.0~~	~~103863.00~~	~~-46243.10~~	~~10186.30~~	~~-51.51~~	~~1822.28~~	~~1270.39~~	~~-758.20~~

~~30.0~~	~~106638.00~~	~~-45299.90~~	~~9011.04~~	~~-39.38~~	~~1598.42~~	~~1447.93~~	~~-698.69~~
~~35.0~~	~~113059.00~~	~~-40056.10~~	~~4113.55~~	~~-12.17~~	~~1169.02~~	~~1660.44~~	~~-557.52~~
~~40.0~~	~~119131.00~~	~~-30799.70~~	~~-3521.78~~	~~14.35~~	~~791.94~~	~~1564.09~~	~~-401.82~~

~~Table 2.1.28 (cont'd)~~
~~PWR FUEL ASSEMBLY COOLING TIME-DEPENDENT COEFFICIENTS~~
~~(ZR-CLAD FUEL)~~

~~Cooling Time (years)~~	~~Array/Class 17x17B/C~~						
	~~A~~	~~B~~	~~C~~	~~D~~	~~E~~	~~F~~	~~G~~
~~2.0~~	~~6766.33~~	~~744.89~~	~~-33.96~~	~~-154.11~~	~~1387.05~~	~~-99.30~~	~~-455.94~~
~~2.25~~	~~8406.78~~	~~735.84~~	~~-42.13~~	~~-148.76~~	~~1546.40~~	~~-127.76~~	~~-412.22~~
~~2.5~~	~~10326.00~~	~~618.40~~	~~-42.67~~	~~-140.84~~	~~1696.17~~	~~-158.83~~	~~-428.21~~
~~2.75~~	~~12425.70~~	~~400.95~~	~~-35.11~~	~~-134.79~~	~~1833.92~~	~~-190.65~~	~~-448.69~~
~~3.0~~	~~14787.40~~	~~16.36~~	~~-8.09~~	~~-128.41~~	~~1953.16~~	~~-221.24~~	~~-426.08~~
~~4.0~~	~~25076.00~~	~~-2855.35~~	~~319.19~~	~~-107.73~~	~~2268.19~~	~~-307.82~~	~~-118.54~~
~~5.0~~	~~34842.80~~	~~-7144.52~~	~~1015.11~~	~~-107.42~~	~~2457.65~~	~~-342.14~~	~~294.08~~
~~6.0~~	~~43259.40~~	~~-11920.40~~	~~1970.81~~	~~-113.08~~	~~2547.52~~	~~-316.78~~	~~82.08~~
~~7.0~~	~~49884.40~~	~~-16230.60~~	~~2962.56~~	~~-122.92~~	~~2650.94~~	~~-291.11~~	~~127.95~~
~~8.0~~	~~55105.20~~	~~-19804.80~~	~~3845.74~~	~~-128.64~~	~~2682.52~~	~~-232.47~~	~~-61.87~~
~~9.0~~	~~59268.90~~	~~-22820.00~~	~~4674.45~~	~~-133.56~~	~~2742.72~~	~~-203.91~~	~~-265.03~~
~~10.0~~	~~62653.20~~	~~-25227.80~~	~~5347.65~~	~~-134.19~~	~~2744.28~~	~~-150.34~~	~~-229.28~~
~~11.0~~	~~65528.50~~	~~-27328.80~~	~~5990.85~~	~~-134.07~~	~~2759.67~~	~~-117.12~~	~~-349.73~~
~~12.0~~	~~67925.00~~	~~-28930.10~~	~~6470.25~~	~~-131.66~~	~~2738.04~~	~~-69.75~~	~~-467.93~~
~~13.0~~	~~70014.00~~	~~-30295.30~~	~~6903.21~~	~~-128.41~~	~~2714.49~~	~~-27.74~~	~~-580.42~~
~~14.0~~	~~71939.40~~	~~-31542.90~~	~~7318.09~~	~~-124.70~~	~~2688.09~~	~~8.93~~	~~-630.83~~
~~15.0~~	~~73678.50~~	~~-32578.30~~	~~7669.57~~	~~-120.41~~	~~2659.19~~	~~41.04~~	~~-637.54~~
~~16.0~~	~~75313.80~~	~~-33488.20~~	~~7973.96~~	~~-115.46~~	~~2610.74~~	~~86.53~~	~~-708.01~~
~~17.0~~	~~76870.20~~	~~-34276.40~~	~~8238.11~~	~~-110.15~~	~~2563.22~~	~~123.29~~	~~-739.52~~
~~18.0~~	~~78338.30~~	~~-34971.50~~	~~8477.60~~	~~-104.26~~	~~2505.00~~	~~166.49~~	~~-731.14~~
~~19.0~~	~~79849.90~~	~~-35703.80~~	~~8726.57~~	~~-99.14~~	~~2447.13~~	~~211.29~~	~~-756.38~~
~~20.0~~	~~81109.20~~	~~-36047.10~~	~~8827.48~~	~~-93.99~~	~~2404.21~~	~~235.46~~	~~-751.74~~
~~22.0~~	~~83793.40~~	~~-36898.90~~	~~9088.73~~	~~-82.74~~	~~2281.57~~	~~313.80~~	~~-704.73~~
~~24.0~~	~~86424.70~~	~~-37453.70~~	~~9205.18~~	~~-70.11~~	~~2134.35~~	~~393.96~~	~~-654.44~~
~~26.0~~	~~88971.30~~	~~-37671.00~~	~~9134.01~~	~~-58.64~~	~~1983.82~~	~~478.46~~	~~-659.93~~
~~28.0~~	~~91497.60~~	~~-37723.60~~	~~9032.79~~	~~-47.61~~	~~1861.20~~	~~520.75~~	~~-564.47~~

~~30.0~~	~~93706.20~~	~~-36961.70~~	~~8512.11~~	~~-37.17~~	~~1743.83~~	~~543.52~~	~~-523.93~~
~~35.0~~	~~99798.50~~	~~-34670.70~~	~~6911.55~~	~~-9.53~~	~~1376.43~~	~~593.61~~	~~-406.67~~
~~40.0~~	~~105384.00~~	~~-29185.20~~	~~3708.34~~	~~16.92~~	~~1086.25~~	~~354.06~~	~~-343.59~~

~~Table 2.1.29~~
~~BWR FUEL ASSEMBLY COOLING TIME-DEPENDENT COEFFICIENTS~~
~~(ZR-CLAD FUEL)~~
~~ARRAY/CLASS 7x7B, 10x10F~~
~~(Page 1 of 10)~~

~~Cooling Time (years)~~	~~A~~	~~B~~	~~C~~	~~D~~	~~E~~	~~F~~	~~G~~
~~1.0~~	~~5689.61~~	~~4491.21~~	~~-307.68~~	~~-181.84~~	~~2162.62~~	~~-140.54~~	~~-2761.10~~
~~1.25~~	~~6680.84~~	~~6378.87~~	~~-646.86~~	~~-187.68~~	~~2843.57~~	~~-326.36~~	~~-1535.72~~
~~1.5~~	~~9072.84~~	~~7764.60~~	~~-981.95~~	~~-192.20~~	~~3503.34~~	~~-554.78~~	~~-1248.10~~
~~1.75~~	~~11671.70~~	~~9494.03~~	~~-1549.05~~	~~-183.76~~	~~3984.48~~	~~-756.41~~	~~-1003.61~~
~~2.0~~	~~15761.10~~	~~10171.40~~	~~-1983.74~~	~~-180.41~~	~~4533.44~~	~~-1035.69~~	~~-1020.71~~
~~2.25~~	~~20683.90~~	~~10100.50~~	~~-2362.96~~	~~-171.37~~	~~4924.21~~	~~-1259.16~~	~~-1149.28~~
~~2.5~~	~~25710.50~~	~~9847.51~~	~~-2788.08~~	~~-162.18~~	~~5329.88~~	~~-1548.05~~	~~-1048.31~~
~~2.75~~	~~31858.60~~	~~7767.18~~	~~-2661.83~~	~~-154.93~~	~~5675.76~~	~~-1804.31~~	~~-992.87~~
~~3.0~~	~~38703.40~~	~~4333.22~~	~~-2101.88~~	~~-144.94~~	~~5898.42~~	~~-1990.59~~	~~-1030.87~~
~~4.0~~	~~65948.40~~	~~-16991.70~~	~~3924.57~~	~~-118.43~~	~~6390.16~~	~~-2406.62~~	~~-614.30~~
~~5.0~~	~~90881.20~~	~~-47264.90~~	~~16771.40~~	~~-112.75~~	~~6498.93~~	~~-2241.12~~	~~-192.49~~
~~6.0~~	~~111776.00~~	~~-79261.50~~	~~33399.20~~	~~-115.32~~	~~6416.04~~	~~-1620.07~~	~~-84.57~~
~~7.0~~	~~127348.00~~	~~-107023.00~~	~~50534.70~~	~~-139.25~~	~~6848.43~~	~~-1458.29~~	~~-14.89~~
~~8.0~~	~~140072.00~~	~~-130028.00~~	~~65223.10~~	~~-144.93~~	~~6836.24~~	~~-857.79~~	~~-99.75~~
~~9.0~~	~~150749.00~~	~~-150213.00~~	~~79005.50~~	~~-147.77~~	~~6773.51~~	~~-231.87~~	~~-331.15~~
~~10.0~~	~~158943.00~~	~~-167178.00~~	~~92612.70~~	~~-164.66~~	~~7287.36~~	~~-461.83~~	~~-382.12~~
~~11.0~~	~~165714.00~~	~~-179168.00~~	~~101557.00~~	~~-164.07~~	~~7241.92~~	~~-45.10~~	~~-521.50~~
~~12.0~~	~~171975.00~~	~~-190727.00~~	~~110548.00~~	~~-161.09~~	~~7166.19~~	~~380.43~~	~~-589.16~~
~~13.0~~	~~177624.00~~	~~-200947.00~~	~~118921.00~~	~~-158.82~~	~~7131.17~~	~~664.17~~	~~-667.75~~
~~14.0~~	~~182802.00~~	~~-210117.00~~	~~126526.00~~	~~-154.60~~	~~7016.50~~	~~1083.45~~	~~-747.88~~
~~15.0~~	~~186884.00~~	~~-214518.00~~	~~128584.00~~	~~-147.82~~	~~6809.36~~	~~1591.41~~	~~-783.35~~
~~16.0~~	~~191316.00~~	~~-221293.00~~	~~134071.00~~	~~-142.04~~	~~6646.92~~	~~2019.29~~	~~-841.16~~
~~17.0~~	~~195369.00~~	~~-231600.00~~	~~147624.00~~	~~-158.43~~	~~7404.40~~	~~946.55~~	~~-820.02~~
~~18.0~~	~~199404.00~~	~~-236224.00~~	~~150408.00~~	~~-148.69~~	~~7053.70~~	~~1655.35~~	~~-883.27~~
~~19.0~~	~~203726.00~~	~~-243272.00~~	~~157476.00~~	~~-143.31~~	~~6936.71~~	~~1903.09~~	~~-895.71~~
~~20.0~~	~~206861.00~~	~~-245479.00~~	~~159023.00~~	~~-137.13~~	~~6829.41~~	~~2091.47~~	~~-903.40~~
~~22.0~~	~~213325.00~~	~~-250875.00~~	~~163825.00~~	~~-127.55~~	~~6623.17~~	~~2500.20~~	~~-800.98~~
~~24.0~~	~~220063.00~~	~~-255065.00~~	~~166460.00~~	~~-114.40~~	~~6330.37~~	~~2896.83~~	~~-803.85~~
~~26.0~~	~~226903.00~~	~~-262541.00~~	~~177379.00~~	~~-115.77~~	~~6627.51~~	~~2189.72~~	~~-651.65~~
~~28.0~~	~~234964.00~~	~~-270961.00~~	~~187677.00~~	~~-102.37~~	~~6255.46~~	~~2595.08~~	~~-735.34~~

~~30.0~~	~~241796.00~~	~~-272482.00~~	~~188002.00~~	~~-88.80~~	~~5779.54~~	~~3315.93~~	~~-731.24~~
~~35.0~~	~~257457.00~~	~~-265751.00~~	~~183333.00~~	~~-71.68~~	~~5676.93~~	~~1648.24~~	~~-511.23~~
~~40.0~~	~~282525.00~~	~~-292276.00~~	~~240288.00~~	~~-43.47~~	~~4948.25~~	~~152.96~~	~~-833.96~~

~~Table 2.1.29 (cont'd)~~
~~BWR FUEL ASSEMBLY COOLING TIME-DEPENDENT COEFFICIENTS~~
~~(ZR-CLAD FUEL)~~
~~ARRAY/CLASS 8x8B~~
~~(Page 2 of 10)~~

~~Cooling Time (years)~~	~~A~~	~~B~~	~~C~~	~~D~~	~~E~~	~~F~~	~~G~~
~~1.0~~	~~5872.87~~	~~4876.54~~	~~-344.60~~	~~-182.28~~	~~2276.71~~	~~-160.55~~	~~-2884.11~~
~~1.25~~	~~7240.18~~	~~6669.72~~	~~-674.77~~	~~-191.67~~	~~3008.15~~	~~-265.92~~	~~-1737.98~~
~~1.5~~	~~9133.59~~	~~8738.93~~	~~-1206.18~~	~~-186.94~~	~~3586.01~~	~~-573.93~~	~~-1179.83~~
~~1.75~~	~~12212.40~~	~~10285.80~~	~~-1758.81~~	~~-183.81~~	~~4183.48~~	~~-839.00~~	~~-1095.35~~
~~2.0~~	~~15913.80~~	~~11664.70~~	~~-2480.99~~	~~-179.56~~	~~4694.73~~	~~-1100.00~~	~~-1003.87~~
~~2.25~~	~~20652.00~~	~~12023.80~~	~~-3025.66~~	~~-174.12~~	~~5204.92~~	~~-1412.29~~	~~-979.17~~
~~2.5~~	~~26986.10~~	~~10399.30~~	~~-3032.60~~	~~-163.94~~	~~5594.88~~	~~-1694.85~~	~~-1213.71~~
~~2.75~~	~~33074.30~~	~~8670.65~~	~~-3129.69~~	~~-156.84~~	~~5959.94~~	~~-1975.74~~	~~-1054.90~~
~~3.0~~	~~39987.50~~	~~5388.94~~	~~-2722.03~~	~~-146.15~~	~~6189.85~~	~~-2184.18~~	~~-1039.58~~
~~4.0~~	~~68821.60~~	~~-18071.10~~	~~4016.97~~	~~-119.21~~	~~6655.64~~	~~-2578.72~~	~~-677.77~~
~~5.0~~	~~95032.70~~	~~-50959.00~~	~~18228.50~~	~~-113.67~~	~~6737.08~~	~~-2341.46~~	~~-253.74~~
~~6.0~~	~~117864.00~~	~~-88879.60~~	~~39468.80~~	~~-128.75~~	~~6937.68~~	~~-1918.61~~	~~-203.01~~
~~7.0~~	~~133919.00~~	~~-117151.00~~	~~56431.30~~	~~-139.69~~	~~6960.80~~	~~-1212.83~~	~~-123.38~~
~~8.0~~	~~147621.00~~	~~-142952.00~~	~~73246.80~~	~~-143.67~~	~~6879.18~~	~~-441.73~~	~~-342.11~~
~~9.0~~	~~158036.00~~	~~-165478.00~~	~~90946.70~~	~~-167.32~~	~~7480.35~~	~~-551.45~~	~~-378.22~~
~~10.0~~	~~166796.00~~	~~-181378.00~~	~~101771.00~~	~~-165.98~~	~~7346.03~~	~~114.50~~	~~-504.04~~
~~11.0~~	~~174312.00~~	~~-195869.00~~	~~112810.00~~	~~-165.26~~	~~7291.07~~	~~642.48~~	~~-648.03~~
~~12.0~~	~~180736.00~~	~~-207916.00~~	~~122412.00~~	~~-163.34~~	~~7243.01~~	~~1055.04~~	~~-742.81~~
~~13.0~~	~~187002.00~~	~~-219945.00~~	~~132127.00~~	~~-159.70~~	~~7084.08~~	~~1641.84~~	~~-903.88~~
~~14.0~~	~~192382.00~~	~~-229413.00~~	~~139613.00~~	~~-156.32~~	~~7001.62~~	~~2085.84~~	~~-972.60~~
~~15.0~~	~~196087.00~~	~~-233618.00~~	~~142299.00~~	~~-151.48~~	~~6860.06~~	~~2570.55~~	~~-883.73~~
~~16.0~~	~~202268.00~~	~~-249608.00~~	~~159974.00~~	~~-162.80~~	~~7359.57~~	~~1999.93~~	~~-1048.13~~
~~17.0~~	~~206376.00~~	~~-256109.00~~	~~166401.00~~	~~-159.20~~	~~7309.03~~	~~2257.68~~	~~-1062.93~~
~~18.0~~	~~209117.00~~	~~-255071.00~~	~~162389.00~~	~~-151.82~~	~~7125.28~~	~~2596.49~~	~~-891.61~~
~~19.0~~	~~213124.00~~	~~-261295.00~~	~~168674.00~~	~~-146.82~~	~~7004.96~~	~~2966.11~~	~~-951.40~~
~~20.0~~	~~217047.00~~	~~-267281.00~~	~~175609.00~~	~~-141.96~~	~~6943.62~~	~~3118.99~~	~~-1012.59~~
~~22.0~~	~~223569.00~~	~~-268761.00~~	~~171389.00~~	~~-127.42~~	~~6436.52~~	~~4175.11~~	~~-877.23~~
~~24.0~~	~~233533.00~~	~~-291046.00~~	~~200512.00~~	~~-131.73~~	~~6830.33~~	~~3613.57~~	~~-988.74~~
~~26.0~~	~~238557.00~~	~~-284966.00~~	~~188216.00~~	~~-118.63~~	~~6424.02~~	~~4316.86~~	~~-862.50~~

~~28.0~~	~~245385.00~~	~~-285588.00~~	~~185055.00~~	~~-105.51~~	~~6116.61~~	~~4651.69~~	~~-844.39~~
~~30.0~~	~~254559.00~~	~~-295608.00~~	~~196106.00~~	~~-100.36~~	~~6027.39~~	~~4465.31~~	~~-886.90~~
~~35.0~~	~~272231.00~~	~~-295589.00~~	~~203313.00~~	~~-71.05~~	~~5259.94~~	~~4464.18~~	~~-744.47~~
~~40.0~~	~~290782.00~~	~~-286198.00~~	~~204311.00~~	~~-50.38~~	~~4868.38~~	~~2364.75~~	~~-614.59~~

~~Table 2.1.29~~
~~BWR FUEL ASSEMBLY COOLING TIME-DEPENDENT COEFFICIENTS~~
~~(ZR-CLAD FUEL)~~
~~ARRAY/CLASS 8x8 C/D/E~~
~~(page 3 of 10)~~

~~Cooling Time (years)~~	~~A~~	~~B~~	~~C~~	~~D~~	~~E~~	~~F~~	~~G~~
~~1.0~~	~~5499.81~~	~~5105.94~~	~~-397.34~~	~~-189.28~~	~~2307.05~~	~~-157.92~~	~~-2489.82~~
~~1.25~~	~~6763.01~~	~~7033.27~~	~~-751.51~~	~~-192.95~~	~~3068.21~~	~~-286.64~~	~~-1564.51~~
~~1.5~~	~~9164.56~~	~~8675.52~~	~~-1179.12~~	~~-194.38~~	~~3726.15~~	~~-623.94~~	~~-1216.26~~
~~1.75~~	~~12495.50~~	~~10090.50~~	~~-1732.25~~	~~-187.02~~	~~4238.65~~	~~-847.44~~	~~-1136.06~~
~~2.0~~	~~16663.00~~	~~10889.80~~	~~-2211.52~~	~~-182.17~~	~~4831.25~~	~~-1175.27~~	~~-1260.49~~
~~2.25~~	~~21598.90~~	~~10980.20~~	~~-2691.18~~	~~-176.65~~	~~5300.72~~	~~-1453.46~~	~~-1219.04~~
~~2.5~~	~~27348.40~~	~~10071.30~~	~~-2967.33~~	~~-165.41~~	~~5680.31~~	~~-1735.86~~	~~-1252.79~~
~~2.75~~	~~33467.10~~	~~8232.39~~	~~-2999.52~~	~~-158.56~~	~~6061.56~~	~~-2033.93~~	~~-1086.98~~
~~3.0~~	~~40382.30~~	~~4849.42~~	~~-2525.53~~	~~-148.53~~	~~6314.10~~	~~-2257.89~~	~~-1075.95~~
~~4.0~~	~~68954.10~~	~~-18263.30~~	~~4048.93~~	~~-123.13~~	~~6850.62~~	~~-2734.70~~	~~-652.59~~
~~5.0~~	~~96324.30~~	~~-53730.10~~	~~19778.60~~	~~-114.90~~	~~6841.59~~	~~-2381.30~~	~~-353.71~~
~~6.0~~	~~118229.00~~	~~-89906.60~~	~~39997.30~~	~~-134.45~~	~~7190.60~~	~~-2120.86~~	~~-143.41~~
~~7.0~~	~~134948.00~~	~~-119919.00~~	~~58227.10~~	~~-143.18~~	~~7200.03~~	~~-1397.69~~	~~-170.37~~
~~8.0~~	~~149092.00~~	~~-147517.00~~	~~76590.50~~	~~-149.16~~	~~7110.00~~	~~-528.97~~	~~-313.19~~
~~9.0~~	~~159771.00~~	~~-170139.00~~	~~93968.00~~	~~-170.19~~	~~7649.69~~	~~-595.38~~	~~-403.04~~
~~10.0~~	~~168715.00~~	~~-187828.00~~	~~107088.00~~	~~-172.19~~	~~7651.82~~	~~-46.57~~	~~-555.81~~
~~11.0~~	~~176169.00~~	~~-201821.00~~	~~117349.00~~	~~-170.83~~	~~7550.84~~	~~552.84~~	~~-651.76~~
~~12.0~~	~~182662.00~~	~~-214445.00~~	~~127628.00~~	~~-169.36~~	~~7519.56~~	~~997.32~~	~~-756.73~~
~~13.0~~	~~189114.00~~	~~-227085.00~~	~~137699.00~~	~~-166.11~~	~~7388.07~~	~~1583.27~~	~~-844.97~~
~~14.0~~	~~195273.00~~	~~-239345.00~~	~~148361.00~~	~~-160.79~~	~~7228.22~~	~~2124.28~~	~~-1017.11~~
~~15.0~~	~~199939.00~~	~~-249862.00~~	~~159949.00~~	~~-174.10~~	~~7782.47~~	~~1566.35~~	~~-1026.32~~
~~16.0~~	~~204899.00~~	~~-258274.00~~	~~166856.00~~	~~-167.77~~	~~7534.06~~	~~2227.05~~	~~-1070.51~~
~~17.0~~	~~209356.00~~	~~-265290.00~~	~~173458.00~~	~~-161.96~~	~~7463.49~~	~~2386.89~~	~~-1040.14~~
~~18.0~~	~~213546.00~~	~~-272476.00~~	~~180667.00~~	~~-158.41~~	~~7387.49~~	~~2763.66~~	~~-1098.37~~
~~19.0~~	~~217506.00~~	~~-277100.00~~	~~183949.00~~	~~-150.21~~	~~7155.18~~	~~3240.82~~	~~-1107.07~~
~~20.0~~	~~219837.00~~	~~-275266.00~~	~~179705.00~~	~~-145.05~~	~~7009.96~~	~~3638.55~~	~~-1007.16~~
~~22.0~~	~~228092.00~~	~~-285272.00~~	~~186688.00~~	~~-133.55~~	~~6672.08~~	~~4473.64~~	~~-1122.87~~
~~24.0~~	~~237213.00~~	~~-304032.00~~	~~211958.00~~	~~-136.95~~	~~7000.92~~	~~4086.48~~	~~-1049.61~~
~~26.0~~	~~242060.00~~	~~-297359.00~~	~~199620.00~~	~~-125.83~~	~~6734.22~~	~~4465.79~~	~~-972.10~~

~~28.0~~	~~249432.00~~	~~-299622.00~~	~~196900.00~~	~~-111.26~~	~~6222.03~~	~~5440.43~~	~~-914.71~~
~~30.0~~	~~263307.00~~	~~-334844.00~~	~~247655.00~~	~~-111.83~~	~~6452.32~~	~~4775.31~~	~~-1191.53~~
~~35.0~~	~~273393.00~~	~~-291765.00~~	~~178985.00~~	~~-83.84~~	~~5736.80~~	~~4650.87~~	~~-621.35~~
~~40.0~~	~~293153.00~~	~~-283353.00~~	~~175255.00~~	~~-57.06~~	~~4937.79~~	~~3684.27~~	~~-559.25~~

~~Table 2.1.29~~
~~BWR FUEL ASSEMBLY COOLING TIME DEPENDENT COEFFICIENTS~~
~~(ZR-CLAD FUEL)~~
~~ARRAY/CLASS 9x9 A~~
~~(page 4 of 10)~~

~~Cooling Time (years)~~	~~A~~	~~B~~	~~C~~	~~D~~	~~E~~	~~F~~	~~G~~
~~1.0~~	~~6052.38~~	~~5071.10~~	~~-377.23~~	~~-189.39~~	~~2329.15~~	~~-150.71~~	~~-2461.49~~
~~1.25~~	~~7809.20~~	~~6767.24~~	~~-685.64~~	~~-190.94~~	~~3101.92~~	~~-385.33~~	~~-1625.56~~
~~1.5~~	~~9828.98~~	~~8472.94~~	~~-1182.05~~	~~-192.73~~	~~3783.44~~	~~-633.02~~	~~-1099.88~~
~~1.75~~	~~12766.50~~	~~10646.50~~	~~-1862.96~~	~~-187.66~~	~~4368.12~~	~~-896.69~~	~~-910.37~~
~~2.0~~	~~16564.30~~	~~12063.20~~	~~-2586.67~~	~~-184.87~~	~~4976.49~~	~~-1228.06~~	~~-894.91~~
~~2.25~~	~~22071.80~~	~~11834.70~~	~~-3015.91~~	~~-174.88~~	~~5443.22~~	~~-1518.94~~	~~-1014.33~~
~~2.5~~	~~27866.60~~	~~10993.50~~	~~-3286.54~~	~~-168.71~~	~~5965.88~~	~~-1909.06~~	~~-1027.88~~
~~2.75~~	~~34375.10~~	~~9004.62~~	~~-3367.62~~	~~-158.97~~	~~6305.05~~	~~-2182.06~~	~~-933.24~~
~~3.0~~	~~41566.50~~	~~5392.11~~	~~-2800.23~~	~~-149.79~~	~~6613.45~~	~~-2462.36~~	~~-904.38~~
~~4.0~~	~~72006.50~~	~~-20264.40~~	~~4921.01~~	~~-123.85~~	~~7211.86~~	~~-3004.62~~	~~-603.22~~
~~5.0~~	~~100197.00~~	~~-57315.80~~	~~21669.60~~	~~-118.72~~	~~7356.33~~	~~-2796.24~~	~~-243.52~~
~~6.0~~	~~124367.00~~	~~-99348.10~~	~~46264.80~~	~~-136.71~~	~~7648.05~~	~~-2394.38~~	~~-67.58~~
~~7.0~~	~~143009.00~~	~~-134740.00~~	~~68824.10~~	~~-143.35~~	~~7544.90~~	~~-1403.30~~	~~-173.80~~
~~8.0~~	~~157479.00~~	~~-165996.00~~	~~92255.30~~	~~-168.05~~	~~8114.30~~	~~-1315.88~~	~~-266.71~~
~~9.0~~	~~169636.00~~	~~-191379.00~~	~~110928.00~~	~~-172.50~~	~~8069.55~~	~~-500.37~~	~~-450.57~~
~~10.0~~	~~179282.00~~	~~-211202.00~~	~~125969.00~~	~~-172.12~~	~~7976.57~~	~~283.36~~	~~-617.13~~
~~11.0~~	~~187512.00~~	~~-228637.00~~	~~140325.00~~	~~-172.16~~	~~7928.03~~	~~894.69~~	~~-760.39~~
~~12.0~~	~~195321.00~~	~~-245580.00~~	~~154682.00~~	~~-170.38~~	~~7824.20~~	~~1596.02~~	~~-863.97~~
~~13.0~~	~~202110.00~~	~~-263050.00~~	~~173293.00~~	~~-187.18~~	~~8470.09~~	~~1003.55~~	~~-953.17~~
~~14.0~~	~~208171.00~~	~~-274758.00~~	~~183332.00~~	~~-179.75~~	~~8249.83~~	~~1717.21~~	~~-1103.07~~
~~15.0~~	~~213590.00~~	~~-284590.00~~	~~191650.00~~	~~-175.64~~	~~8098.33~~	~~2289.04~~	~~-1165.13~~
~~16.0~~	~~218091.00~~	~~-292503.00~~	~~199557.00~~	~~-171.84~~	~~8035.82~~	~~2659.38~~	~~-1119.03~~
~~17.0~~	~~223491.00~~	~~-302449.00~~	~~208733.00~~	~~-164.92~~	~~7833.36~~	~~3192.21~~	~~-1255.80~~
~~18.0~~	~~226523.00~~	~~-304524.00~~	~~209895.00~~	~~-162.71~~	~~7829.04~~	~~3410.57~~	~~-1091.33~~
~~19.0~~	~~231702.00~~	~~-312496.00~~	~~215730.00~~	~~-153.73~~	~~7552.13~~	~~4052.91~~	~~-1189.12~~
~~20.0~~	~~236531.00~~	~~-324776.00~~	~~232293.00~~	~~-164.72~~	~~8073.05~~	~~3368.73~~	~~-1233.57~~
~~22.0~~	~~244888.00~~	~~-335452.00~~	~~241932.00~~	~~-150.44~~	~~7566.26~~	~~4642.58~~	~~-1160.69~~
~~24.0~~	~~252171.00~~	~~-340795.00~~	~~244542.00~~	~~-141.18~~	~~7321.23~~	~~5355.16~~	~~-1142.40~~
~~26.0~~	~~259438.00~~	~~-343494.00~~	~~244340.00~~	~~-129.66~~	~~7094.56~~	~~5645.82~~	~~-1119.92~~

~~28.0~~	~~268823.00~~	~~-359239.00~~	~~266068.00~~	~~-130.16~~	~~7204.93~~	~~5605.85~~	~~-1064.30~~
~~30.0~~	~~277221.00~~	~~-363922.00~~	~~268930.00~~	~~-116.96~~	~~6799.84~~	~~6219.78~~	~~-1037.79~~
~~35.0~~	~~294285.00~~	~~-351643.00~~	~~245914.00~~	~~-99.35~~	~~6404.25~~	~~5923.44~~	~~-713.23~~
~~40.0~~	~~324174.00~~	~~-389397.00~~	~~319233.00~~	~~-77.68~~	~~5933.52~~	~~3992.56~~	~~-1188.62~~

~~Table 2.1.29~~
~~BWR FUEL ASSEMBLY COOLING TIME-DEPENDENT COEFFICIENTS~~
~~(ZR-CLAD FUEL)~~
~~ARRAY/CLASS 9x9B~~
~~(page 5 of 10)~~

~~Cooling Time (years)~~	~~A~~	~~B~~	~~C~~	~~D~~	~~E~~	~~F~~	~~G~~
~~1.0~~	~~5578.48~~	~~5425.38~~	~~-432.11~~	~~-186.86~~	~~2357.62~~	~~-150.45~~	~~-2405.55~~
~~1.25~~	~~7982.03~~	~~6676.90~~	~~-642.60~~	~~-194.99~~	~~3183.10~~	~~-399.01~~	~~-1919.75~~
~~1.5~~	~~9842.92~~	~~8943.64~~	~~-1222.01~~	~~-189.84~~	~~3845.90~~	~~-652.60~~	~~-1360.01~~
~~1.75~~	~~12927.50~~	~~10582.20~~	~~-1802.08~~	~~-190.88~~	~~4502.57~~	~~-944.36~~	~~-1169.95~~
~~2.0~~	~~17186.80~~	~~11657.20~~	~~-2441.58~~	~~-183.45~~	~~5049.98~~	~~-1246.51~~	~~-1156.40~~
~~2.25~~	~~21800.20~~	~~12295.50~~	~~-3074.77~~	~~-180.94~~	~~5660.86~~	~~-1631.58~~	~~-1064.82~~
~~2.5~~	~~28010.00~~	~~11198.70~~	~~-3349.88~~	~~-169.84~~	~~6074.18~~	~~-1943.73~~	~~-1220.46~~
~~2.75~~	~~34607.80~~	~~9092.75~~	~~-3327.98~~	~~-161.55~~	~~6476.70~~	~~-2279.47~~	~~-1090.70~~
~~3.0~~	~~41425.40~~	~~6300.12~~	~~-3202.59~~	~~-151.95~~	~~6782.84~~	~~-2566.85~~	~~-1000.46~~
~~4.0~~	~~71942.80~~	~~-18734.90~~	~~3920.65~~	~~-125.38~~	~~7367.52~~	~~-3119.27~~	~~-631.75~~
~~5.0~~	~~101151.00~~	~~-57291.00~~	~~21182.10~~	~~-118.05~~	~~7377.24~~	~~-2721.50~~	~~-361.88~~
~~6.0~~	~~125823.00~~	~~-99944.80~~	~~45636.60~~	~~-136.47~~	~~7588.00~~	~~-2124.69~~	~~-262.67~~
~~7.0~~	~~144638.00~~	~~-135378.00~~	~~67687.60~~	~~-143.88~~	~~7447.72~~	~~-995.76~~	~~-340.94~~
~~8.0~~	~~159872.00~~	~~-168383.00~~	~~91921.20~~	~~-168.66~~	~~7933.70~~	~~-673.04~~	~~-395.74~~
~~9.0~~	~~172305.00~~	~~-194121.00~~	~~110332.00~~	~~-172.16~~	~~7831.09~~	~~301.31~~	~~-634.37~~
~~10.0~~	~~181683.00~~	~~-213140.00~~	~~124418.00~~	~~-173.36~~	~~7740.03~~	~~1165.16~~	~~-753.12~~
~~11.0~~	~~190922.00~~	~~-232977.00~~	~~140095.00~~	~~-171.28~~	~~7581.53~~	~~2053.29~~	~~-1027.00~~
~~12.0~~	~~198213.00~~	~~-248066.00~~	~~152236.00~~	~~-170.70~~	~~7492.96~~	~~2781.03~~	~~-1087.99~~
~~13.0~~	~~205947.00~~	~~-268590.00~~	~~173240.00~~	~~-187.42~~	~~8096.44~~	~~2390.78~~	~~-1199.48~~
~~14.0~~	~~211867.00~~	~~-280583.00~~	~~184192.00~~	~~-183.14~~	~~8023.23~~	~~2903.27~~	~~-1325.04~~
~~15.0~~	~~217071.00~~	~~-289407.00~~	~~190649.00~~	~~-177.77~~	~~7760.30~~	~~3819.17~~	~~-1355.68~~
~~16.0~~	~~221340.00~~	~~-294404.00~~	~~193178.00~~	~~-173.59~~	~~7653.54~~	~~4235.81~~	~~-1282.26~~
~~17.0~~	~~227205.00~~	~~-306489.00~~	~~204027.00~~	~~-164.96~~	~~7309.81~~	~~5290.73~~	~~-1440.44~~
~~18.0~~	~~231085.00~~	~~-310612.00~~	~~206608.00~~	~~-160.03~~	~~7176.88~~	~~5715.32~~	~~-1383.11~~
~~19.0~~	~~236345.00~~	~~-320398.00~~	~~215697.00~~	~~-153.84~~	~~7020.00~~	~~6284.82~~	~~-1522.44~~
~~20.0~~	~~240125.00~~	~~-328538.00~~	~~227545.00~~	~~-170.25~~	~~7836.24~~	~~5008.11~~	~~-1382.77~~
~~22.0~~	~~245672.00~~	~~-325279.00~~	~~216287.00~~	~~-158.18~~	~~7517.98~~	~~5919.63~~	~~-1187.15~~
~~24.0~~	~~256479.00~~	~~-345503.00~~	~~236771.00~~	~~-144.07~~	~~6970.57~~	~~7508.12~~	~~-1317.75~~
~~26.0~~	~~260950.00~~	~~-331434.00~~	~~205388.00~~	~~-130.57~~	~~6497.58~~	~~8638.70~~	~~-1076.78~~
~~28.0~~	~~269984.00~~	~~-343628.00~~	~~218366.00~~	~~-134.58~~	~~6861.68~~	~~8165.52~~	~~-1062.58~~

~~30.0~~	~~278259.00~~	~~-348285.00~~	~~221391.00~~	~~-123.31~~	~~6538.19~~	~~8720.28~~	~~-1076.88~~
~~35.0~~	~~297697.00~~	~~-344053.00~~	~~202586.00~~	~~-105.06~~	~~6094.38~~	~~9194.58~~	~~-852.15~~
~~40.0~~	~~331243.00~~	~~-401432.00~~	~~313358.00~~	~~-81.82~~	~~5561.33~~	~~7636.50~~	~~-1470.42~~

~~Table 2.1.29~~
~~BWR FUEL ASSEMBLY COOLING TIME-DEPENDENT COEFFICIENTS~~
~~(ZR-CLAD FUEL)~~
~~ARRAY/CLASS 9x9 C/D~~
~~(page 6 of 10)~~

~~Cooling Time (years)~~	~~A~~	~~B~~	~~C~~	~~D~~	~~E~~	~~F~~	~~G~~
~~1.0~~	~~5464.88~~	~~5428.10~~	~~-438.30~~	~~-184.75~~	~~2311.58~~	~~-146.87~~	~~-2296.51~~
~~1.25~~	~~7470.50~~	~~6970.15~~	~~-717.25~~	~~-187.88~~	~~3079.06~~	~~-374.49~~	~~-1640.55~~
~~1.5~~	~~9709.06~~	~~8904.78~~	~~-1225.72~~	~~-190.25~~	~~3758.72~~	~~-621.81~~	~~-1207.57~~
~~1.75~~	~~12213.40~~	~~11153.30~~	~~-1982.54~~	~~-189.94~~	~~4409.97~~	~~-917.68~~	~~-845.16~~
~~2.0~~	~~16691.80~~	~~11823.60~~	~~-2447.14~~	~~-185.99~~	~~5008.36~~	~~-1243.90~~	~~-1059.30~~
~~2.25~~	~~21740.60~~	~~12301.10~~	~~-3136.66~~	~~-173.22~~	~~5422.51~~	~~-1511.79~~	~~-1061.56~~
~~2.5~~	~~27709.70~~	~~11300.00~~	~~-3398.46~~	~~-167.10~~	~~5898.90~~	~~-1850.17~~	~~-1171.40~~
~~2.75~~	~~33988.10~~	~~9774.59~~	~~-3696.16~~	~~-158.15~~	~~6268.38~~	~~-2155.04~~	~~-974.14~~
~~3.0~~	~~41117.20~~	~~6515.41~~	~~-3381.03~~	~~-148.32~~	~~6548.78~~	~~-2413.74~~	~~-948.98~~
~~4.0~~	~~71428.60~~	~~-18297.80~~	~~3576.44~~	~~-123.51~~	~~7125.21~~	~~-2923.50~~	~~-632.21~~
~~5.0~~	~~100397.00~~	~~-56458.80~~	~~20611.70~~	~~-115.75~~	~~7125.58~~	~~-2528.06~~	~~-313.97~~
~~6.0~~	~~124283.00~~	~~-97234.10~~	~~43750.10~~	~~-135.36~~	~~7393.89~~	~~-2038.45~~	~~-178.07~~
~~7.0~~	~~142677.00~~	~~-131502.00~~	~~64937.90~~	~~-142.42~~	~~7276.64~~	~~-994.67~~	~~-255.89~~
~~8.0~~	~~158111.00~~	~~-164750.00~~	~~89150.00~~	~~-165.13~~	~~7682.79~~	~~-614.18~~	~~-382.56~~
~~9.0~~	~~169539.00~~	~~-187815.00~~	~~105688.00~~	~~-170.16~~	~~7701.54~~	~~95.21~~	~~-536.66~~
~~10.0~~	~~179168.00~~	~~-207560.00~~	~~120407.00~~	~~-172.05~~	~~7615.14~~	~~907.40~~	~~-757.15~~
~~11.0~~	~~187428.00~~	~~-224318.00~~	~~133228.00~~	~~-170.11~~	~~7472.64~~	~~1710.47~~	~~-885.30~~
~~12.0~~	~~195546.00~~	~~-241540.00~~	~~147050.00~~	~~-166.19~~	~~7281.30~~	~~2560.85~~	~~-1135.94~~
~~13.0~~	~~202256.00~~	~~-258699.00~~	~~164971.00~~	~~-182.40~~	~~7906.42~~	~~2044.37~~	~~-1182.19~~
~~14.0~~	~~207838.00~~	~~-268927.00~~	~~173192.00~~	~~-178.93~~	~~7770.91~~	~~2703.98~~	~~-1224.09~~
~~15.0~~	~~213979.00~~	~~-281611.00~~	~~184781.00~~	~~-172.75~~	~~7552.21~~	~~3409.13~~	~~-1276.86~~
~~16.0~~	~~217809.00~~	~~-285839.00~~	~~187221.00~~	~~-168.56~~	~~7458.11~~	~~3805.42~~	~~-1317.69~~
~~17.0~~	~~223749.00~~	~~-297214.00~~	~~196642.00~~	~~-160.86~~	~~7141.47~~	~~4676.19~~	~~-1362.21~~
~~18.0~~	~~226075.00~~	~~-295937.00~~	~~193130.00~~	~~-157.66~~	~~7127.19~~	~~4895.03~~	~~-1291.13~~
~~19.0~~	~~230997.00~~	~~-304670.00~~	~~201281.00~~	~~-150.53~~	~~6907.85~~	~~5558.32~~	~~-1353.07~~
~~20.0~~	~~238022.00~~	~~-324930.00~~	~~227066.00~~	~~-158.32~~	~~7284.25~~	~~5103.45~~	~~-1464.16~~
~~22.0~~	~~243676.00~~	~~-322706.00~~	~~217208.00~~	~~-147.77~~	~~6978.74~~	~~5979.30~~	~~-1239.05~~
~~24.0~~	~~251683.00~~	~~-332524.00~~	~~227486.00~~	~~-137.48~~	~~6744.91~~	~~6651.45~~	~~-1261.39~~
~~26.0~~	~~256408.00~~	~~-321812.00~~	~~204514.00~~	~~-125.79~~	~~6394.39~~	~~7373.18~~	~~-1135.32~~

~~28.0~~	~~264537.00~~	~~-330729.00~~	~~215269.00~~	~~-131.03~~	~~6864.20~~	~~6415.84~~	~~-1014.55~~
~~30.0~~	~~273958.00~~	~~-341208.00~~	~~225146.00~~	~~-115.29~~	~~6196.43~~	~~7947.39~~	~~-1073.39~~
~~35.0~~	~~292385.00~~	~~-333153.00~~	~~204415.00~~	~~-98.00~~	~~5956.86~~	~~7222.98~~	~~-860.79~~
~~40.0~~	~~329247.00~~	~~-419504.00~~	~~371883.00~~	~~-71.42~~	~~4943.73~~	~~7633.01~~	~~-1618.27~~

~~Table 2.1.29~~
~~BWR FUEL ASSEMBLY COOLING TIME-DEPENDENT COEFFICIENTS~~
~~(ZR-CLAD FUEL)~~
~~ARRAY/CLASS 9x9 E/F~~
~~(page 7 of 10)~~

~~Cooling Time (years)~~	~~A~~	~~B~~	~~C~~	~~D~~	~~E~~	~~F~~	~~G~~
~~1.0~~	~~5714.25~~	~~5122.01~~	~~-403.48~~	~~-185.29~~	~~2270.44~~	~~-155.62~~	~~-2262.37~~
~~1.25~~	~~7108.39~~	~~6936.62~~	~~-728.46~~	~~-194.88~~	~~3064.64~~	~~-395.01~~	~~-1260.12~~
~~1.5~~	~~9860.40~~	~~8382.32~~	~~-1120.78~~	~~-188.06~~	~~3633.63~~	~~-600.75~~	~~-1040.69~~
~~1.75~~	~~12950.70~~	~~9922.89~~	~~-1671.50~~	~~-186.14~~	~~4214.90~~	~~-858.89~~	~~-884.98~~
~~2.0~~	~~16854.60~~	~~11084.70~~	~~-2322.04~~	~~-181.73~~	~~4769.99~~	~~-1147.12~~	~~-810.29~~
~~2.25~~	~~21630.80~~	~~11546.20~~	~~-2940.96~~	~~-172.49~~	~~5228.13~~	~~-1436.00~~	~~-839.61~~
~~2.5~~	~~27849.90~~	~~10029.20~~	~~-2985.66~~	~~-164.15~~	~~5650.51~~	~~-1736.59~~	~~-1040.92~~
~~2.75~~	~~34540.60~~	~~7548.11~~	~~-2786.62~~	~~-154.38~~	~~5990.92~~	~~-2013.50~~	~~-935.15~~
~~3.0~~	~~41307.10~~	~~4337.80~~	~~-2362.16~~	~~-146.82~~	~~6295.85~~	~~-2275.82~~	~~-884.96~~
~~4.0~~	~~70768.40~~	~~-20480.20~~	~~5197.61~~	~~-121.39~~	~~6876.47~~	~~-2797.83~~	~~-537.40~~
~~5.0~~	~~98180.80~~	~~-56583.30~~	~~21720.10~~	~~-115.24~~	~~7004.63~~	~~-2612.66~~	~~-168.15~~
~~6.0~~	~~120573.00~~	~~-94683.40~~	~~43765.30~~	~~-134.45~~	~~7390.91~~	~~-2400.88~~	~~20.85~~
~~7.0~~	~~138493.00~~	~~-128353.00~~	~~65326.00~~	~~-141.23~~	~~7368.45~~	~~-1657.87~~	~~2.12~~
~~8.0~~	~~151304.00~~	~~-154813.00~~	~~84923.70~~	~~-165.48~~	~~7997.42~~	~~-1799.73~~	~~-3.75~~
~~9.0~~	~~162835.00~~	~~-178601.00~~	~~102770.00~~	~~-169.20~~	~~8012.87~~	~~-1222.27~~	~~-178.21~~
~~10.0~~	~~173089.00~~	~~-200396.00~~	~~119704.00~~	~~-169.43~~	~~7906.04~~	~~-489.94~~	~~-481.35~~
~~11.0~~	~~180227.00~~	~~-213998.00~~	~~130552.00~~	~~-169.48~~	~~7924.61~~	~~-143.28~~	~~-537.04~~
~~12.0~~	~~188058.00~~	~~-230819.00~~	~~144797.00~~	~~-165.45~~	~~7782.15~~	~~482.35~~	~~-705.69~~
~~13.0~~	~~193490.00~~	~~-240795.00~~	~~153382.00~~	~~-163.80~~	~~7756.04~~	~~834.76~~	~~-753.66~~
~~14.0~~	~~199338.00~~	~~-255751.00~~	~~170303.00~~	~~-178.59~~	~~8424.78~~	~~16.81~~	~~-795.55~~
~~15.0~~	~~204471.00~~	~~-264530.00~~	~~177215.00~~	~~-172.61~~	~~8186.47~~	~~708.91~~	~~-873.25~~
~~16.0~~	~~209807.00~~	~~-275635.00~~	~~189071.00~~	~~-167.97~~	~~8087.71~~	~~1042.99~~	~~-936.73~~
~~17.0~~	~~214452.00~~	~~-282609.00~~	~~194830.00~~	~~-159.86~~	~~7819.12~~	~~1616.41~~	~~-906.17~~
~~18.0~~	~~217197.00~~	~~-283928.00~~	~~195786.00~~	~~-157.56~~	~~7869.81~~	~~1568.69~~	~~-890.15~~
~~19.0~~	~~221266.00~~	~~-288837.00~~	~~199363.00~~	~~-149.64~~	~~7592.40~~	~~2213.50~~	~~-965.82~~
~~20.0~~	~~225737.00~~	~~-295774.00~~	~~205279.00~~	~~-143.23~~	~~7337.40~~	~~2875.11~~	~~-876.23~~
~~22.0~~	~~234598.00~~	~~-314227.00~~	~~231133.00~~	~~-148.51~~	~~7825.76~~	~~2021.35~~	~~-879.15~~
~~24.0~~	~~242046.00~~	~~-320606.00~~	~~235951.00~~	~~-134.75~~	~~7367.58~~	~~2926.98~~	~~-913.50~~
~~26.0~~	~~247960.00~~	~~-318479.00~~	~~229552.00~~	~~-123.51~~	~~7133.33~~	~~3171.11~~	~~-783.22~~

~~28.0~~	~~261521.00~~	~~-352854.00~~	~~278305.00~~	~~-120.41~~	~~7120.21~~	~~3024.72~~	~~-1121.44~~
~~30.0~~	~~264913.00~~	~~-340198.00~~	~~263913.00~~	~~-111.92~~	~~6968.28~~	~~2888.33~~	~~-788.23~~
~~35.0~~	~~288082.00~~	~~-360268.00~~	~~293412.00~~	~~-86.40~~	~~6220.44~~	~~2894.70~~	~~-961.02~~
~~40.0~~	~~298948.00~~	~~-303570.00~~	~~215523.00~~	~~-55.72~~	~~5417.82~~	~~785.23~~	~~-415.39~~

~~Table 2.1.29~~
~~BWR FUEL ASSEMBLY COOLING TIME-DEPENDENT COEFFICIENTS~~
~~(ZR-CLAD FUEL)~~
~~ARRAY/ CLASS 9x9 G~~
~~(Page 8 of 10)~~

~~Cooling Time (years)~~	~~A~~	~~B~~	~~C~~	~~D~~	~~E~~	~~F~~	~~G~~
~~1.0~~	~~6976.18~~	~~5184.24~~	~~-373.54~~	~~-181.54~~	~~2360.15~~	~~-124.29~~	~~-2514.26~~
~~1.25~~	~~9143.56~~	~~6689.33~~	~~-616.47~~	~~-187.09~~	~~3235.36~~	~~-396.20~~	~~-1745.46~~
~~1.5~~	~~11054.30~~	~~9053.26~~	~~-1217.15~~	~~-187.98~~	~~3963.72~~	~~-671.80~~	~~-1106.16~~
~~1.75~~	~~13609.90~~	~~11584.70~~	~~-2067.04~~	~~-188.84~~	~~4708.46~~	~~-1026.29~~	~~-782.65~~
~~2.0~~	~~18157.70~~	~~12664.10~~	~~-2736.69~~	~~-182.35~~	~~5344.31~~	~~-1383.11~~	~~-916.79~~
~~2.25~~	~~23646.70~~	~~12752.10~~	~~-3248.16~~	~~-178.95~~	~~5971.94~~	~~-1793.73~~	~~-925.78~~
~~2.5~~	~~29660.10~~	~~12309.80~~	~~-3821.64~~	~~-169.21~~	~~6473.09~~	~~-2183.65~~	~~-879.92~~
~~2.75~~	~~36525.80~~	~~10358.80~~	~~-3962.11~~	~~-162.46~~	~~6968.29~~	~~-2613.38~~	~~-863.49~~
~~3.0~~	~~44006.40~~	~~7030.85~~	~~-3698.49~~	~~-153.38~~	~~7336.54~~	~~-2971.63~~	~~-809.92~~
~~4.0~~	~~77288.30~~	~~-21207.50~~	~~4543.15~~	~~-125.70~~	~~8058.78~~	~~-3705.78~~	~~-537.87~~
~~5.0~~	~~110686.00~~	~~-69960.20~~	~~29062.30~~	~~-130.54~~	~~8442.77~~	~~-3626.36~~	~~-336.85~~
~~6.0~~	~~137786.00~~	~~-118830.00~~	~~58088.00~~	~~-136.52~~	~~8339.36~~	~~-2532.48~~	~~-201.40~~
~~7.0~~	~~160795.00~~	~~-169293.00~~	~~94340.50~~	~~-161.16~~	~~8672.27~~	~~-1671.25~~	~~-379.07~~
~~8.0~~	~~177763.00~~	~~-207034.00~~	~~122389.00~~	~~-170.18~~	~~8619.96~~	~~-400.24~~	~~-562.99~~
~~9.0~~	~~193108.00~~	~~-243101.00~~	~~150849.00~~	~~-171.94~~	~~8368.05~~	~~1156.18~~	~~-881.11~~
~~10.0~~	~~205042.00~~	~~-275555.00~~	~~181997.00~~	~~-195.35~~	~~9071.69~~	~~1098.87~~	~~-1083.51~~
~~11.0~~	~~215280.00~~	~~-300568.00~~	~~204362.00~~	~~-194.55~~	~~8934.09~~	~~2200.13~~	~~-1266.10~~
~~12.0~~	~~223585.00~~	~~-319189.00~~	~~220301.00~~	~~-191.69~~	~~8775.21~~	~~3201.84~~	~~-1325.62~~
~~13.0~~	~~230947.00~~	~~-335777.00~~	~~234994.00~~	~~-189.96~~	~~8659.97~~	~~4110.52~~	~~-1472.39~~
~~14.0~~	~~239135.00~~	~~-355478.00~~	~~253619.00~~	~~-183.93~~	~~8406.36~~	~~5194.67~~	~~-1726.13~~
~~15.0~~	~~245572.00~~	~~-374776.00~~	~~278406.00~~	~~-203.34~~	~~9278.36~~	~~4194.86~~	~~-1666.34~~
~~16.0~~	~~251881.00~~	~~-387322.00~~	~~288544.00~~	~~-193.80~~	~~8836.24~~	~~5557.89~~	~~-1689.56~~
~~17.0~~	~~257861.00~~	~~-401610.00~~	~~304798.00~~	~~-189.68~~	~~8737.81~~	~~6220.47~~	~~-1840.71~~
~~18.0~~	~~262232.00~~	~~-408488.00~~	~~311370.00~~	~~-185.11~~	~~8602.16~~	~~6925.67~~	~~-1728.75~~
~~19.0~~	~~265329.00~~	~~-406025.00~~	~~301388.00~~	~~-178.52~~	~~8347.70~~	~~7730.36~~	~~-1689.95~~
~~20.0~~	~~271234.00~~	~~-419055.00~~	~~315509.00~~	~~-171.72~~	~~8067.36~~	~~8751.47~~	~~-1705.40~~
~~22.0~~	~~283895.00~~	~~-451199.00~~	~~356261.00~~	~~-175.40~~	~~8389.72~~	~~8926.87~~	~~-1890.66~~
~~24.0~~	~~288388.00~~	~~-437401.00~~	~~323902.00~~	~~-164.80~~	~~8075.31~~	~~9968.86~~	~~-1575.02~~
~~26.0~~	~~299757.00~~	~~-459004.00~~	~~349014.00~~	~~-154.15~~	~~7793.16~~	~~11086.10~~	~~-1690.60~~

~~28.0~~	~~312233.00~~	~~-487890.00~~	~~389532.00~~	~~-156.41~~	~~8001.62~~	~~11248.70~~	~~-1695.28~~
~~30.0~~	~~317451.00~~	~~-470929.00~~	~~352843.00~~	~~-144.12~~	~~7616.90~~	~~12129.50~~	~~-1519.49~~
~~35.0~~	~~340908.00~~	~~-472938.00~~	~~320383.00~~	~~-126.33~~	~~6958.19~~	~~14189.40~~	~~-1265.87~~
~~40.0~~	~~355826.00~~	~~-406707.00~~	~~181832.00~~	~~-109.88~~	~~6567.54~~	~~13350.90~~	~~-690.33~~

~~Table 2.1.29~~
~~BWR FUEL ASSEMBLY COOLING TIME DEPENDENT COEFFICIENTS~~
~~(ZR-CLAD FUEL)~~
~~ARRAY/ CLASS 10x10 A/B/G~~
~~(Page 9 of 10)~~

~~Cooling Time (years)~~	~~A~~	~~B~~	~~C~~	~~D~~	~~E~~	~~F~~	~~G~~
~~1.0~~	~~5723.53~~	~~4982.96~~	~~-365.36~~	~~-189.50~~	~~2319.36~~	~~-173.73~~	~~-2587.84~~
~~1.25~~	~~7460.31~~	~~6576.80~~	~~-660.70~~	~~-190.93~~	~~3005.93~~	~~-368.19~~	~~-1663.24~~
~~1.5~~	~~8981.27~~	~~8950.03~~	~~-1364.94~~	~~-188.17~~	~~3629.28~~	~~-596.80~~	~~-988.51~~
~~1.75~~	~~12283.70~~	~~10322.70~~	~~-1785.67~~	~~-185.78~~	~~4201.56~~	~~-850.07~~	~~-879.86~~
~~2.0~~	~~16284.00~~	~~11316.60~~	~~-2373.42~~	~~-183.95~~	~~4757.49~~	~~-1129.72~~	~~-908.53~~
~~2.25~~	~~21494.10~~	~~11161.90~~	~~-2738.06~~	~~-174.87~~	~~5233.98~~	~~-1435.08~~	~~-1029.88~~
~~2.5~~	~~27378.90~~	~~10122.70~~	~~-3001.13~~	~~-163.37~~	~~5590.72~~	~~-1687.18~~	~~-1133.76~~
~~2.75~~	~~33997.50~~	~~7667.21~~	~~-2796.85~~	~~-154.59~~	~~5934.47~~	~~-1960.21~~	~~-1063.93~~
~~3.0~~	~~40669.30~~	~~4604.85~~	~~-2427.68~~	~~-146.64~~	~~6233.46~~	~~-2224.40~~	~~-1023.08~~
~~4.0~~	~~69456.60~~	~~-19048.60~~	~~4510.80~~	~~-121.07~~	~~6769.53~~	~~-2693.26~~	~~-595.32~~
~~5.0~~	~~96363.50~~	~~-53810.50~~	~~20060.80~~	~~-115.15~~	~~6852.01~~	~~-2455.28~~	~~-235.29~~
~~6.0~~	~~118075.00~~	~~-89649.00~~	~~40101.30~~	~~-135.03~~	~~7207.34~~	~~-2199.03~~	~~-31.82~~
~~7.0~~	~~135465.00~~	~~-121448.00~~	~~59891.00~~	~~-141.81~~	~~7176.22~~	~~-1464.52~~	~~-84.35~~
~~8.0~~	~~149172.00~~	~~-147759.00~~	~~77477.10~~	~~-146.29~~	~~7123.94~~	~~-720.75~~	~~-270.69~~
~~9.0~~	~~160098.00~~	~~-171854.00~~	~~96698.30~~	~~-168.49~~	~~7716.07~~	~~-861.33~~	~~-341.94~~
~~10.0~~	~~168703.00~~	~~-188210.00~~	~~108590.00~~	~~-170.65~~	~~7707.01~~	~~-369.98~~	~~-413.26~~
~~11.0~~	~~176895.00~~	~~-205123.00~~	~~122221.00~~	~~-167.56~~	~~7590.63~~	~~267.07~~	~~-597.28~~
~~12.0~~	~~183500.00~~	~~-217775.00~~	~~132403.00~~	~~-165.29~~	~~7503.92~~	~~748.16~~	~~-696.44~~
~~13.0~~	~~189527.00~~	~~-229054.00~~	~~141757.00~~	~~-162.77~~	~~7481.92~~	~~1050.96~~	~~-848.98~~
~~14.0~~	~~195892.00~~	~~-241671.00~~	~~152138.00~~	~~-155.37~~	~~7192.81~~	~~1854.09~~	~~-983.23~~
~~15.0~~	~~199561.00~~	~~-249322.00~~	~~161820.00~~	~~-172.75~~	~~7962.69~~	~~824.80~~	~~-863.19~~
~~16.0~~	~~204447.00~~	~~-258563.00~~	~~171271.00~~	~~-167.33~~	~~7839.02~~	~~1163.01~~	~~-928.77~~
~~17.0~~	~~209187.00~~	~~-266807.00~~	~~178586.00~~	~~-160.49~~	~~7588.94~~	~~1870.46~~	~~-983.28~~
~~18.0~~	~~212908.00~~	~~-270532.00~~	~~180865.00~~	~~-155.48~~	~~7487.99~~	~~2077.63~~	~~-955.84~~
~~19.0~~	~~216478.00~~	~~-274912.00~~	~~185127.00~~	~~-150.92~~	~~7417.63~~	~~2302.50~~	~~-949.30~~
~~20.0~~	~~219761.00~~	~~-276790.00~~	~~185299.00~~	~~-144.53~~	~~7207.71~~	~~2794.21~~	~~-860.04~~
~~22.0~~	~~230330.00~~	~~-297894.00~~	~~208958.00~~	~~-142.95~~	~~7317.84~~	~~2710.62~~	~~-1141.54~~
~~24.0~~	~~235204.00~~	~~-296597.00~~	~~207242.00~~	~~-136.96~~	~~7299.78~~	~~2658.68~~	~~-881.02~~
~~26.0~~	~~243035.00~~	~~-302622.00~~	~~210474.00~~	~~-120.72~~	~~6753.85~~	~~3686.66~~	~~-891.14~~
~~28.0~~	~~250446.00~~	~~-307503.00~~	~~216130.00~~	~~-107.51~~	~~6366.92~~	~~4185.55~~	~~-863.84~~

~~30.0~~	~~265199.00~~	~~-348982.00~~	~~280458.00~~	~~-107.22~~	~~6539.80~~	~~3562.03~~	~~-1192.36~~
~~35.0~~	~~273468.00~~	~~-298369.00~~	~~203934.00~~	~~-79.97~~	~~5875.23~~	~~3082.40~~	~~-627.85~~
~~40.0~~	~~292898.00~~	~~-285148.00~~	~~187876.00~~	~~-50.41~~	~~4835.07~~	~~2436.15~~	~~-509.94~~

~~Table 2.1.29~~
~~BWR FUEL ASSEMBLY COOLING TIME-DEPENDENT COEFFICIENTS~~
~~(ZR-CLAD FUEL)~~
~~ARRAY/ CLASS 10x10 C~~
~~(Page 10 of 10)~~

~~Cooling Time (years)~~	~~A~~	~~B~~	~~C~~	~~D~~	~~E~~	~~F~~	~~G~~
~~1.0~~	~~6190.24~~	~~5096.25~~	~~-384.43~~	~~-186.75~~	~~2340.62~~	~~-151.36~~	~~-2528.72~~
~~1.25~~	~~7815.16~~	~~6793.14~~	~~-675.23~~	~~-193.97~~	~~3174.53~~	~~-405.81~~	~~-1662.94~~
~~1.5~~	~~10010.30~~	~~8798.90~~	~~-1199.94~~	~~-193.60~~	~~3870.99~~	~~-669.85~~	~~-1247.50~~
~~1.75~~	~~13229.50~~	~~10326.80~~	~~-1757.80~~	~~-189.26~~	~~4471.71~~	~~-940.69~~	~~-1117.18~~
~~2.0~~	~~17325.30~~	~~11490.30~~	~~-2423.96~~	~~-183.30~~	~~5030.60~~	~~-1243.75~~	~~-1042.41~~
~~2.25~~	~~22130.00~~	~~11951.30~~	~~-2993.28~~	~~-179.73~~	~~5638.45~~	~~-1641.98~~	~~-1049.38~~
~~2.5~~	~~28141.40~~	~~10893.00~~	~~-3249.42~~	~~-171.97~~	~~6092.80~~	~~-1970.42~~	~~-1042.25~~
~~2.75~~	~~35001.90~~	~~8485.77~~	~~-3132.08~~	~~-161.49~~	~~6464.02~~	~~-2288.54~~	~~-1064.03~~
~~3.0~~	~~41817.40~~	~~5588.18~~	~~-2935.15~~	~~-152.37~~	~~6778.27~~	~~-2580.33~~	~~-960.42~~
~~4.0~~	~~72503.80~~	~~-20126.90~~	~~4676.40~~	~~-126.12~~	~~7389.26~~	~~-3161.51~~	~~-598.75~~
~~5.0~~	~~101686.00~~	~~-58844.80~~	~~22172.30~~	~~-118.88~~	~~7430.83~~	~~-2824.08~~	~~-314.90~~
~~6.0~~	~~125964.00~~	~~-100714.00~~	~~46115.40~~	~~-137.38~~	~~7670.65~~	~~-2280.40~~	~~-139.13~~
~~7.0~~	~~145279.00~~	~~-138063.00~~	~~69971.00~~	~~-145.81~~	~~7593.29~~	~~-1239.47~~	~~-240.17~~
~~8.0~~	~~160736.00~~	~~-171770.00~~	~~94922.90~~	~~-169.48~~	~~8074.18~~	~~-936.98~~	~~-413.14~~
~~9.0~~	~~173109.00~~	~~-198050.00~~	~~114195.00~~	~~-173.24~~	~~7952.04~~	~~107.22~~	~~-587.69~~
~~10.0~~	~~183348.00~~	~~-219689.00~~	~~130706.00~~	~~-174.38~~	~~7886.25~~	~~887.26~~	~~-747.19~~
~~11.0~~	~~192349.00~~	~~-239413.00~~	~~146643.00~~	~~-173.03~~	~~7738.68~~	~~1801.89~~	~~-960.79~~
~~12.0~~	~~198722.00~~	~~-251849.00~~	~~156661.00~~	~~-174.40~~	~~7779.41~~	~~2247.21~~	~~-1024.32~~
~~13.0~~	~~206317.00~~	~~-271870.00~~	~~177242.00~~	~~-191.21~~	~~8405.58~~	~~1825.60~~	~~-1138.70~~
~~14.0~~	~~212647.00~~	~~-284224.00~~	~~187282.00~~	~~-183.63~~	~~8103.28~~	~~2759.09~~	~~-1219.61~~
~~15.0~~	~~218920.00~~	~~-297923.00~~	~~200391.00~~	~~-179.50~~	~~7978.82~~	~~3335.37~~	~~-1313.57~~
~~16.0~~	~~223379.00~~	~~-304963.00~~	~~206476.00~~	~~-175.76~~	~~7922.23~~	~~3689.54~~	~~-1328.16~~
~~17.0~~	~~228676.00~~	~~-314595.00~~	~~214380.00~~	~~-168.29~~	~~7569.76~~	~~4728.35~~	~~-1384.57~~
~~18.0~~	~~233175.00~~	~~-321606.00~~	~~220636.00~~	~~-164.63~~	~~7582.84~~	~~4872.65~~	~~-1394.73~~
~~19.0~~	~~238334.00~~	~~-334048.00~~	~~236292.00~~	~~-170.69~~	~~7886.97~~	~~4618.40~~	~~-1403.78~~
~~20.0~~	~~242429.00~~	~~-340497.00~~	~~242818.00~~	~~-172.36~~	~~8094.92~~	~~4434.37~~	~~-1437.97~~
~~22.0~~	~~251428.00~~	~~-353397.00~~	~~253878.00~~	~~-156.59~~	~~7500.41~~	~~6060.21~~	~~-1412.04~~
~~24.0~~	~~257957.00~~	~~-354461.00~~	~~249954.00~~	~~-147.71~~	~~7305.10~~	~~6634.39~~	~~-1346.94~~
~~26.0~~	~~272010.00~~	~~-391459.00~~	~~299301.00~~	~~-145.25~~	~~7227.25~~	~~7258.81~~	~~-1619.05~~

~~28.0~~	~~273995.00~~	~~-368436.00~~	~~261102.00~~	~~-136.90~~	~~7071.78~~	~~7562.48~~	~~-1159.20~~
~~30.0~~	~~279666.00~~	~~-356857.00~~	~~232864.00~~	~~-125.34~~	~~6696.43~~	~~8273.08~~	~~-973.58~~
~~35.0~~	~~297242.00~~	~~-340805.00~~	~~191056.00~~	~~-108.66~~	~~6404.77~~	~~8127.91~~	~~-777.55~~
~~40.0~~	~~330405.00~~	~~-398218.00~~	~~299749.00~~	~~-84.01~~	~~5531.03~~	~~7980.06~~	~~-1232.79~~

Table 2.2.3
TEMPERATURE LIMITS
Note: Refer to paragraphs 2.2.1.5 and 2.2.2.3 for definition of "Temperature Limits" under various service conditions

Sub-component or Part**	Long Term, Normal Condition Temperature Limits (Long-Term Events) (º F)	Short-Term Events†† Temperature Limits (º F)	Off-Normal and Accident Condition Temperature Limits † (º F)	30-Day Accident Condition Temperature Limit (° F) †††
MPC shell	600‡	775‡	775	572
MPC basket	752	1058	1058	752
MPC Extruded Aluminum shims‡‡	752	932	932	752
MPC Neutron Absorber	752	1058	1058	752
MPC lid	600‡	775‡	775	572
MPC closure ring	500‡	775‡	775	572
MPC baseplate	440~~400~~‡	775‡	775	572
HI-TRAC inner shell	-	500	800	-
HI-TRAC pool lid/transfer lid	-	350	800	-
HI-TRAC top lid	-	400	800	-

** Wherever applicable, the limiting temperatures under all service conditions in this table for each sub-component or part have been aligned with the corresponding values in Table 2.2.3 of the HI-STORM FW FSAR [2.2.17].

††† 30-day accident event is defined as 100% blocked vent condition at threshold heat loads defined in Section 4.6.

†† Normal short term operations includes MPC drying and onsite transport per Reference [2.0.8]. The 1058ºF temperature limit applies to MPCs containing all moderate burnup fuel as discussed in Reference [2.0.9]. The limit for MPCs containing one or more high burnup fuel assemblies is 752ºF. See also Section 4.3.

† For accident conditions that involve heating of the steel structures and no mechanical loading (such as the blocked air duct accident), the permissible metal temperature of the steel parts is defined by Table 1A of ASME Section II (Part D) for Section III, Class 3 materials as 700ºF. For the ISFSI fire event, the local temperature limit of HI-STORM concrete is 1100 ºF (Appendix 1.D) and the overpack steel structure is required to remain physically stable (i.e., so there will be no risk of structural instability such as gross buckling the maximum temperature shall be less than 50% of the component's melting temperature and the specific temperature limits in Table 2.2.3 for the overpack steel structure do not apply.) Concrete that exceeds 1100 ºF shall be considered unavailable for shielding of the overpack.

‡ Temperature limits in Table 1.A.6 shall take precedence if duplex stainless steels are used for the fabrication of confinement boundary components as described in Appendix 1.A

‡‡ Structural evaluations of extruded aluminum shims in Chapter 3 are based on temperatures that bound those computed in Chapter 4. Site-specific evaluations shall be performed when adopted values are exceeded. During horizontal transfer of the HI-TRAC, the short-term event temperature is limited to 752°F.

Table 2.2.3 (continued)
TEMPERATURE LIMITS

Sub-component or Part**	Long Term, Normal Condition Temperature Limits (Long-Term Events) (º F)	Short-Term Events†† Temperature Limits (º F)	Off-Normal and Accident Condition Temperature Limits † (º F)	30-Day Accident Condition Temperature Limit (° F) †††
HI-TRAC top flange	-	400	700	-
HI-TRAC pool lid seals	-	350	N/A	-
HI-TRAC bottom lid bolts	-	350	800	-
HI-TRAC bottom flange	-	350	800	-
HI-TRAC top lid neutron shielding	-	300	350	-
HI-TRAC radial neutron shield	-	307	N/A	-
HI-TRAC radial lead gamma shield	-	350	600	-
Remainder of HI-TRAC	-	350	800	-
Fuel Cladding	752	752 or 1058††	1058	752
Overpack concrete	300†	572 (on local temperature of shielding concrete)	572 (on local temperature of shielding concrete except under fire†)	450 (on local temperature of shielding concrete)
Overpack Lid Top and Bottom Plate	450	700	800	450
Overpack Inner Shell	475	700	800	450
Remainder of overpack steel structure	400	700	800	450

General note: All short-term, off-normal and accident condition structural evaluations are based on bounding temperatures from thermal evaluations presented in Chapter 4. If the actual computed service condition temperature is not available for a particular sub-component or part, the normal condition temperature limit can be used conservatively in the design basis structural evaluations for MPC and HI-STORM. Similarly, the short-term condition temperature limits can be used for HI-TRAC. The thermal evaluations presented in Chapter 4 must comply with the above temperature limits as well as the temperatures used to inform the structural design basis calculations, which in some cases use actual computed temperatures as opposed to the above limit values. Changes to these computed temperatures should be evaluated under 10CFR72.48 as necessary.

Table 2.2.15 (continued)
LIST OF ASME CODE ALTERNATIVES FOR HI-STORM 100 SYSTEM

Component	Reference ASME Code Section/Article	Code Requirement	Alternative, Justification & Compensatory Measures
MPC Lid and Closure Ring Welds	NB-4243	Full penetration welds required for Category C Joints (flat head to main shell per NB-3352.3)	MPC lid and closure ring are not full penetration welds. They are welded independently to provide a redundant seal. Additionally, a weld efficiency factor of 0.45 has been applied to the analyses of these welds.
MPC Closure Ring, Vent and Drain Cover Plate Welds	NB-5230	Radiographic (RT) or ultrasonic (UT) examination required.	Root (if more than one weld pass is required) and final liquid penetrant examination to be performed in accordance with NB-5245. The closure ring provides independent redundant closure for vent and drain cover plates. Vent and drain port cover plate welds are helium leakage tested. If the redundant port cover design is used, a helium leakage test is not required.
MPC Lid to Shell Weld	NB-5230	Radiographic (RT) or ultrasonic (UT) examination required.	Only UT or multi-layer liquid penetrant (PT) examination is permitted. If PT examination alone is used, at a minimum, it will include the root and final weld layers and each approx. 3/8" of weld depth.
MPC Enclosure Vessel and Lid	NB-6111	All completed pressure retaining systems shall be pressure tested.	The MPC vessel is seal welded in the field following fuel assembly loading. The MPC vessel shall then be pressure tested as defined in Chapter 9. Accessibility for leakage inspections precludes a Code compliant pressure test. Since the shell welds of the MPC cannot be checked for leakage during this pressure test, the shop leakage test to 10^{-7} ref cc/sec (as described in Chapter 9) provides reasonable assurance as to its leak tightness. All MPC vessel welds (except closure ring and vent/drain cover plate) are inspected by volumetric examination, except the MPC lid-to-shell weld shall be verified by volumetric or multi-layer PT examination. If PT alone is used, at a minimum, it must include the root and final layers and each approximately 3/8 inch of weld depth. For either UT or PT, the maximum undetectable flaw size must be demonstrated to be less than

2.3.5.1 Access Control

As required by 10CFR72, uncontrolled access to the ISFSI is prevented through physical protection means. A peripheral fence with an appropriate locking and monitoring system is a standard approach to limit access. The details of the access control systems and procedures, including division of the site into radiation protection areas, will be developed by the licensee (user) of the ISFSI utilizing the HI-STORM 100 System.

2.3.5.2 Shielding

The shielding design is governed by 10CFR72.104 and 10CFR72.106 which provide radiation dose limits for any real individual located at or beyond the nearest boundary of the controlled area. The individual must not receive doses in excess of the limits given in Table 2.3.1 for normal, off-normal, and accident conditions.

The objective of shielding is to assure that radiation dose rates at key locations are as low as practical in order to maintain occupational doses to operating personnel As Low As Reasonably Achievable (ALARA) and to meet the requirements of 10 CFR 72.104 and 10 CFR 72.106 for dose at the controlled area boundary. Three locations are of particular interest in the storage mode:

- immediate vicinity of the cask
- restricted area boundary
- controlled area (site) boundary

Dose rates in the immediate vicinity of the loaded overpack are important in consideration of occupational exposure. Conservative evaluations of dose rate have been performed and are described in Chapter 5 based on the contents of the BWR and PWR MPCs permitted for storage as described in Section 2.1.9. Actual dose rates in operation will be lower than those reported in Chapter 5 for the following reasons:

- The shielding evaluation model has a number of conservatisms, as discussed in Chapter 5.
- No single cask will likely contain design basis fuel in each fuel storage location and the full compliment of non-fuel hardware allowed by Section 2.1.9.
- No single cask will contain fuel and non-fuel hardware at the limiting burnups and cooling times allowed by Section 2.1.9.

Consistent with 10 CFR 72, there is no single dose rate limit established for the HI-STORM 100 System. Compliance with the regulatory limits on occupational and controlled area doses is performance-based, as demonstrated by dose monitoring performed by each cask A design objective for the maximum average radial surface dose rate has been established as 300 mrem/hr and 4000 mrem/hr for the HI-STORM overpack and HI-TRAC transfer cask, respectively. Areas

adjacent to the inlet and exit vents which pass through the radial shield of the overpack are limited to 175 mrem/hr. The average dose rate at the top of the overpack is limited to below 60 mrem/hr. Chapter 5 of this FSAR presents the analyses and evaluations to establish HI-STORM 100 compliance with these design objectives.

Because of the passive nature of the HI-STORM 100 System, human activity related to the system is infrequent and of short duration. Personnel exposures due to operational and maintenance activities are discussed in Chapter 10. Chapter 10 also provides information concerning temporary shielding which may be utilized to reduce the personnel dose during loading, unloading, transfer, and handling operations. The estimated occupational doses for personnel comply with the requirements of 10CFR20.

For the loading and unloading of the HI-STORM overpack with the MPC, several transfer cask designs are provided (i.e., HI-TRAC 125, HI-TRAC 100, HI-TRAC 100D, HI-TRAC 125D, and HI-TRAC 100G). The two 125 ton HI-TRAC provide better shielding than the HI-TRAC 100, 100D, and 100G due to the increased shielding thickness and corresponding greater weight. Provided the licensee is capable of utilizing the 125 ton HI-TRAC, ALARA considerations would normally dictate that the 125 ton HI-TRAC should be used. However, sites may not be capable of utilizing the 125 ton HI-TRAC due to crane capacity limitations, floor loading limitations, or other site-specific considerations. As with other dose reduction-based plant activities, individual users who cannot accommodate the 125 ton HI-TRAC should perform a cost-benefit analysis of the actions (e.g., plant modifications) that would be necessary to use the 125 ton HI-TRAC. The cost of the action(s) would be weighed against the value of the projected reduction in radiation exposure and a decision made based on each plant's particular ALARA implementation philosophy.

Dose rates at the restricted area and site boundaries shall be in accordance with applicable regulations. Licensees shall demonstrate compliance with 10CFR72.104 and 10CFR72.106 for the actual fuel being stored, the ISFSI storage array, and the controlled area boundary distances.

The analyses presented in Chapters 5, 10, and 11 demonstrate that the HI-STORM 100 System is capable of meeting the above radiation dose limits.

2.3.5.3 Radiological Alarm System

There are no credible events that could result in release of radioactive materials or increases in direct radiation above the requirements of 10CFR72.106.

2.3.6 Fire and Explosion Protection

There are no combustible or explosive materials associated with the HI-STORM 100 System. No such materials would be stored within an ISFSI. However, for conservatism we have analyzed a hypothetical fire accident as a bounding condition for HI-STORM 100. An evaluation of the HI-STORM 100 System in a fire accident is discussed in Chapter 11.

Table 2.II.2.6
List of ASME Code Alternatives for HI-STORM Multi-Purpose Canisters (MPCs)

MPC Closure Ring, Vent and Drain Cover Plate Welds	NB-5230	Radiographic (RT) or ultrasonic (UT) examination required.	Root (if more than one weld pass is required) and final liquid penetrant examination to be performed in accordance with NB-5245. The closure ring provides independent redundant closure for vent and drain cover plates. Vent and drain port cover plate welds are helium leakage tested. As an alternative, the helium leakage test does not have to be performed if the redundant port cover design is used.
MPC Lid to Shell Weld	NB-5230	Radiographic (RT) or ultrasonic (UT) examination required.	• Only progressive liquid penetrant (PT) examination is permitted. PT examination will include the root and final weld layers and each approx. 3/8" of weld depth.

is below the "Threshold Temperature" defined in Table 2.2.2 as 110 deg. F for operations inside the part 50 structural boundary and 90 deg. F outside of it. The determination of the Threshold Temperature compliance shall be made based on the best available thermal data for the site.

If the reference ambient temperature exceeds the corresponding Threshold Temperature then a site specific analysis using the methodology set down in Section 4.5 shall be performed using the actual heat load and reference ambient temperature equal to the three day average to ensure that the steady state peak fuel cladding temperature will remain below the Table 2.2.3 limit. If the peak fuel cladding temperature exceeds Table 2.2.3 limit then the use of a Supplemental Cooling System (SCS) is mandatory.

4.5.6 Maximum Internal Pressure

After fuel loading and vacuum drying, but prior to installing the MPC closure ring, the MPC is initially filled with helium. During handling and on-site transfer operations in the HI-TRAC transfer cask, the gas temperature within the MPC rises to its maximum operating temperature as determined by on the thermal analysis methodology described previously. In Table 4.5.6, the MPC internal pressure co-incident with the MPC temperature is reported and compared with the short term (off-normal) pressure limit specified in Table 2.2.1 to show compliance with design limit. The MPC gas pressure listed in Table 4.5.6 is below the MPC design internal pressure listed in Table 2.2.1.

4.5.7 Onsite Transfer under Low Environmental Temperatures

Per Chapter 9 of this FSAR, ethylene glycol is added to the water jacket if the normal onsite transfer operations are performed under ambient temperatures below 32ºF. However, as stated therein, this requirement does not apply if the MPC heat load is above a minimum value at which freezing of the water in the water jacket is of no concern. A calculation is performed to determine the minimum decay heat such that the addition of ethylene glycol is not required (i.e. water jacket stays above the freezing temperature of water). Since the conditions can vary with site, a site-specific evaluation can be performed with the model and methodology consistent with that presented in Section 4.5.1.

An example calculation is performed and documented in the companion thermal report [4.5.1] to demonstrate this approach. Steady state evaluation is performed using the licensing basis thermal model for an ambient temperature of 0ºF (min. ambient temeperature from Table 2.2.2) and an MPC decay heat of 10kW. It is demonstrated that the water temperature is well above its freezing point and therefore addition of ethyle glycol is not required.

ΔT = Permissible temperature rise (°F)
Q = Decay heat load (Btu/hr)

Substituting the parameters in Table 4.6.6, a substantial burial time (34.6 hrs) is obtained. The co-incident MPC pressure is also computed and compared with the accident design pressure (Table 2.2.1). The result (Table 4.6.2) is confirmed to be below the limit.

Alternatively, the licensing basis model from Section 4.4 can be used to compute the time limit under any postulated site-specific burial accident. The licensing basis 3D model shall be modified to include the site-specific burial conditions. For example, the portion of the cask buried under debris is assumed to be insulated. An evaluation shall be performed using this thermal model to compute the burial time for the respective MPC heat load such that all component temperature and pressure limits set forth in Chapter 2 are satisfied.

- The temperature of the materials in the cask, namely steel and lead remain below their respective limits set down in Table 2.II.2.9.

The results, provided in Table 4.II.5.2, show that all temperature and pressure limits are satisfied by the HI-TRAC MS for the permissible heat loads.

(v) Evaluation of Previously Certified MPCs and HI-TRAC Transfer Casks

The suitability of previously certified MPCs and HI-TRAC transfer casks for safely operating with MPC-32M and HI-TRAC MS transfer cask introduced in this Supplement is evaluated by defining following scenarios:

Scenario I: Onsite transfer of MPC-32M in existing HI-TRAC 100 and 125 versions evaluated in Main Section 4.5 of this FSAR.

Scenario II: Onsite transfer of MPC-32, MPC-24, MPC-24E, MPC-68, MPC-32/68 Version 1* canisters in HI-TRAC MS transfer cask.

Above scenarios are evaluated under bounding thermal conditions as articulated below:

Scenario I: MPC-32M under Governing Heat Load and bounding HI-TRAC model as articulated in Section 4.5 of this FSAR.

Scenario II: Limiting MPC-32 under bounding X = 3 regionalized heat load evaluated in Section 4.5 of this FSAR.

The above scenarios are evaluated using the FLUENT and steady state maximum temperatures of the fuel, canister and HI-TRAC computed and tabulated in Tables 4.II.5.3 and 4.II.5.4. A review of the tables support the following conclusions:

- The peak cladding temperature remains below the limits for moderate and high burnup fuels (See Table 1.II.2.3)
- PCT result above supports NO supplemental cooling for safe onsite transport of moderate and high burnup fuel.
- The internal helium pressure is within the limit set down in Table 1.II.2.3 (MPC-32M and MPC-32/68 Version 1) and Table 2.2.1 (previously certified canisters).
- The pressure in the Water Jacket remains below its Design Pressure in Table 1.II.2.6 (HI-TRAC MS) and Table 2.2.1 (previously certified HI-TRACs).
- The temperature of the materials in the cask, namely steel and lead remain below their respective limits set down in Table 2.II.2.9.

(vi) Cask Cooldown and Reflood Analysis During Fuel Unloading Operation

NUREG-1536 requires an evaluation of cask cooldown and reflood procedures to support fuel unloading from a dry condition. Past industry experience generally supports cooldown of cask internals and fuel from hot storage conditions by direct water quenching. Direct MPC cooldown is effectuated by introducing water through the lid drain line. From the drain line, water enters the

* Version 1 canisters are bounded by previous certifications. See Section 4.II.4.3.

MPC cavity near the MPC baseplate. Steam produced during the direct quenching process will be vented from the MPC cavity through the lid vent port. To maximize venting capacity, both vent port RVOA connections must remain open for the duration of the fuel unloading operations. As direct water quenching of hot fuel results in steam generation, it is necessary to limit the rate of water addition to avoid MPC over-pressurization. The rate of water introduction depends on the Canister's aggregate heat generation rate and shall be computed for the subject Canister to ensure that there is no excessive steam buildup in the Canister's cavity. An example calculation is documented in the Supporting Calculation Package [4.II.7]. This steam flow calculation using bounding assumptions (100% steam production and MPC at design pressure) show that the MPC is adequately protected up to a reflood rate of 2967 lb/hr. Limiting the water reflood rate to this amount or less would prevent exceeding the MPC design pressure.

(vii) Onsite Transfer under Low Environmental Temperatures

Per Chapter 9 of this FSAR, ethylene glycol is added to the water jacket if the normal onsite transfer operations are performed under ambient temperatures below 32°F. However, as stated therein, this requirement does not apply if the MPC heat load is above a minimum value at which freezing of the water in the water jacket is of no concern. Consistent with the approach set forth in Section 4.5.7, a site-specific evaluation can be performed with the model and methodology described in Section 4.II.5.2 to compute the minimum heat load above which addition of ethylene glycol to the waterjacket is not required.

capacity (0.156 Btu/lb-°F), density (142 lb/ft^3) and thermal conductivity (1.05 Btu/ft-hr-°F) of concrete for the time constant calculation. The characteristic length of a hollow cylinder is its wall thickness. The characteristic length for the HI-STORM Version E Overpack is therefore2 29.5 in, or approximately 2.46 ft. Substituting into the equation, the overpack time constant is determined as:

$$\tau = \frac{0.156 \times 142 \times 2.46^2}{1.05} = 128\,hrs$$

One-tenth of this time constant is approximately 12.8 hours (768 minutes), substantially longer than the fire duration of 3.62 minutes, so the MPC is evaluated by considering the MPC canister as an adiabatic boundary. The fuel temperature rise is computed next.

Applying upperbound decay heat load (41.2 kW (1.406x10^5 Btu/hr)) and adiabatic heating for the 3.62 minutes fire, the fuel temperature rise is obtained as follows:

$$\Delta T_{fuel} = \frac{\text{Decay heat} \times \text{Time duration}}{(\text{MPC} + \text{Basket} + \text{Shims} + \text{Fuel})\ \text{heat capacities}}$$

The temperature rise computed as 1.1°F* is a miniscule increase in fuel temperature. Consequently, the impact on the MPC internal helium pressure will be quite small. Based on a conservative analysis of the HI-STORM 100 Version E System response to a hypothetical fire event, it is concluded that the fire event does not adversely affect the temperature of the MPC or contained fuel. The evaluation supports the conclusion that the ability of the HI-STORM 100 Version E System to cool the spent nuclear fuel within design temperature limits during and after fire is not compromised.

An alternate method using the FLUENT thermal model described in Section 4.II.4 can be adopted to evaluate HI-STORM Version E site-specific fire accident event similar to that described in Section 4.6 of HI-STORM FW FSAR. Principal modeling steps and acceptance criteria similar to that defined in Table 4.6.10 can be adopted.

b. HI-TRAC MS Fire

To evaluate fuel cladding and MPC pressure boundary integrity under an exposure to a hypothetical short duration fire event during on-site handling operations, a fire accident analysis of the loaded HI-TRAC MS transfer cask is undertaken. In this analysis, the contents of the HI-TRAC are conservatively postulated to undergo a transient heat-up as a lumped mass from the decay heat input and heat input from the short duration fire. The rate of temperature rise of the HI-TRAC depends on the thermal inertia of the cask, the cask initial conditions, the spent nuclear fuel decay heat generation, and the fire heat flux. Using conservatively bounding inputs – lowerbound thermal inertia, steady state maximum cask temperatures (Table 4.II.5.3) and maximum permissible heat load (41.2 kW under regionalized loading) - a bounding cask temperature rise per minute is computed from the combined radiant and forced convection fire and decay heat inputs to the cask. During the handling of the HI-TRAC transfer cask, the transporter is limited to a maximum of 50 gallons. The duration of the 50-gallon fire using the methodology articulated above for HI-STORM fire is computed (See Table 4.II.7.1). The temperature rise computed as the product of the

* Calculations archived in the Calculation Package supporting this supplement [4.II.7].

rate of temperature rise and the fire duration and tabulated in Table 4.II.7.2 is below the 1058ºF accident limit.

Due to the increased MPC temperature, the MPC internal pressure increases. The pressure rise is computed using the Ideal Gas Law and upperbound helium backfill pressure defined in Table 4.II.3.1 and results tabulated in Table 4.II.7.2. The computed MPC accident pressure is substantially below the accident design pressure (Table 1.II.2.3).

An alternate method using the FLUENT thermal model described in Section 4.II.5.3 can be adopted to evaluate HI-TRAC MS site-specific fire accident event. Principal modeling steps and acceptance criteria similar to that defined in Table 4.6.11 can be adopted.

(ii) Water drain-down from HI-TRAC's Water Jacket

The principal effect of jacket water loss accident is a temperature increment in the stored fuel and MPC from the baseline conditions under HI-TRAC on-site transfer. As the MPC-32M fuel temperatures in the HI-TRAC are bounded by evaluation of fuel temperatures in previously certified transfer cask (see main FSAR, Table 4.5.6) the jacket water loss temperatures are likewise bounded by the HI-TRAC jacket water loss evaluation in main FSAR Section 4.6.

(iii) Extreme Environmental Temperatures

To evaluate the effect of extreme weather conditions, an extreme ambient temperature (Table 1.II.2.5) is postulated to persist for a 3-day period. For a conservatively bounding evaluation the extreme temperature is assumed to last for a sufficient duration to allow the HI-STORM 100 system to reach steady state conditions. Because of the large mass of the HI-STORM 100 system, with its corresponding large thermal inertia and the limited duration for the extreme temperature, this assumption is conservative. Starting from a baseline condition evaluated in Section 4.II.4 (normal ambient temperature and limiting fuel storage configuration) the temperatures of the HI-STORM 100 system are conservatively assumed to rise by the difference between the extreme and normal ambient temperatures (55ºF). The HI-STORM 100 extreme ambient temperatures computed in this manner are reported in Table 4.II.7.4. The temperatures comply with Table 2.II.2.9 limits. The co-incident MPC pressure is also computed (Table 4.II.7.3) and compared with the accident design pressure (Table 1.II.2.3), which shows a positive safety margin.

(iv) 100% Blockage of Air Inlets

This event is defined as a complete blockage of all HI-STORM overpack bottom inlets for a significant duration. The immediate consequence of a complete blockage of the air inlets is that the normal circulation of air for cooling the MPC is stopped resulting in a time-dependent temperatures rise of the MPC and its contents. This event analyzed in Supplement Section 4.III.6 under MPC-68M loaded in a HI-STORM 100 overpack is bounding as justified below.

The principal parameters defining the thermal response of an MPC and its fuel under a 100% blocked inlets accident are the initial maximum fuel temperature (TF), temperature rise parameter Q/I where Q is cask heat load and I is MPC thermal inertia and initial storage pressure (P). As tabulated below the cited Supplement 4.III analysis parameters bound the MPC-32M scenario:

Parameter	Supplement 4.III	MPC-32M Scenario	Is Supplement 4.III Bounding?
TF (°F)	708	705[Note 1]	Yes
Q/I (°F/hr)	19.42	18.72[Note2]	Yes
P (psig)	98.7	97.5	Yes
Note 1: Highest temperature scenario under Governing heat load (Table 4.II.4.1). Note 2: Evaluated under highest heat load scenario corresponding to X=0.5 regionalized loading.			

The above evaluation supports the conclusion that MPC-32M 100% blocked ducts is bounded by Supplement 4.III evaluation.

(v) Burial-Under-Debris

Burial of the HI-STORM 100 system under debris is not a credible accident. During storage at the ISFSI there are no structures that loom over the casks whose collapse could completely bury the casks in debris. Minimum regulatory distances from the ISFSI to the nearest ISFSI security fence precludes the close proximity of substantial amount of vegetation. There is no credible mechanism for the HI-STORM 100 system to become completely buried under debris. However, for conservatism, the scenario of complete burial under debris is considered.

The permissible duration for the overpack to remain buried under debris is governed by the peak cladding temperature reaching the ISG-11, Rev 3 limit [4.II.2] and depends on several site specific conditions such as the material, extent of surface coverage and depth/permeability of the debris pile. Such calculation shall be performed for a specific ISFSI based on the debris pile that can envelope the overpack surface in a credible accident event. The calculation will use the Fluent model described in this supplement. Suitable boundary conditions, reflecting the debris condition on site, will be utilized in the evaluations.. The evaluation of an unrealistic bounding condition assuming a perfect insulator (i.e. zero conductivity) around HI-STORM 100 Version E under governing heat load is computed using adiabatic heat-up is documented in the Calculation Package [4.II.7] for reference purposes. It shows substantial burial duration (over two days). For a site- specific scenario of burial and cask heat load, the computed time duration will likely be much greater and the site's Emergency Preparedness plan must be aligned to implement debris removal in the available time.

Alternatively, the licensing basis model from Section 4.II.4 can be used to compute the time limit under any postulated site-specific burial accident. The licensing basis 3D model shall be modified to include the site-specific burial conditions. For example, the portion of the cask buried under debris is assumed to be insulated. An evaluation shall be performed using this thermal model to compute the burial time for the respective MPC heat load such that all component temperature and pressure limits set forth in Chapter 2 are satisfied.

(vi) Evaluation of a most adverse flood water level at the ISFSI

The HI-STORM Version E is engineered to mitigate the effects of a worst case flood that results in blockage of inlet vents. The mitigation features are discussed below. The effect of such a flooding event is bounded by the 100% blocked inlet ducts accident evaluated in this section.

criterion on the drawing is met, solid shims are not required. These solid thin shim plates are made of aluminum and are supported by the extruded shims. A thermal analysis is performed in this subsection to determine the effect of these thin solid shim plates and low emissive extruded shims.

The following changes are made to the thermal model discussed in previous sub-sections to study the impact of the above mentioned design enhancements:

1. The panel notch gap on each side of the intersecting basket panels is increased to 0.8mm.
2. The gap between the basket and extruded shims is modeled with an effective thermal conductivity. The effective thermal conductivity of the gap between the basket and extruded shims is calculated based on a two-dimensional CFD model. This 2-D model includes the solid shim placed between the basket and extruded shims. A schematic of the model is shown in Figure 4.III.1.
3. A conservatively lowerbound emissivity of 0.03 is used for the passivated extruded shim surfaces.
4. Emissivity of solid shims is shown in Table 4.III.1.

The solid shims are conservatively modeled to be equidistant from the basket wall and extruded shim wall. The effective thermal conductivity of the gap between the basket and extruded shims with the presence of solid shim plate bounds the scenario without the presence of solid shims. The sensitivity study documented herein therefore considers only the scenario with solid shim plate placed in the gap between the basket and extruded shim.

A sensitivity study is performed to evaluate the most limiting thermal scenario with least margins to fuel cladding temperature limit i.e. vacuum drying Scenario B defined in Section 4.III.5.3. The results of the sensitivity study to evaluate the effect of design enhancements made to the MPC and its contents are reported in Table 4.III.12. The results demonstrate that fuel temperature is well below its temperature limit and is also bounded by the results based on the licensing basis thermal model in Table 4.III.5.

Therefore, the design enhancements discussed in this subsection are bounded by the licensing basis thermal analysis documented in this chapter. No additional thermal analysis for other conditions (also considering the large temperature margins to limits) is therefore warranted.

4.III.5.7 Onsite Transfer under Low Environmental Temperatures

Per Chapter 9 of this FSAR, ethylene glycol is added to the water jacket if the normal onsite transfer operations are performed under ambient temperatures below 32°F. However, as stated therein, this requirement does not apply if the MPC heat load is above a minimum value at which freezing of the water in the water jacket is of no concern. Consistent with the approach set forth in Section 4.5.7, a site-specific evaluation can be performed with the model and methodology described in Section 4.III.5.1 to compute the minimum heat load above which addition of ethylene glycol to the waterjacket is not required.

HI-TRAC transfer cask, the transporter is limited to a maximum of 50 gallons. The duration of the 50-gallon fire using the methodology articulated above for HI-STORM fire is 4.775 minutes. Therefore, the temperature rise computed as the product of the rate of temperature rise and the fire duration is 24.9°F, and the co-incident fuel cladding temperature (734°F)[1] is below the 1058°F accident limit.

The elevated temperatures as a result of the fire accident will cause the pressure in the water jacket to increase and cause the overpressure relief valves to vent steam to the atmosphere. Based on the fire heat input to the water jacket, less than 11% of the water in the water jacket can be boiled off. However, it is conservatively assumed, for dose calculations, that all the water in the water jacket is lost. In the 125-ton HI-TRAC and HI-TRAC 100G, which use Holtite in the lids for neutron shielding, the elevated fire temperatures would cause the Holtite to exceed its design accident temperature limits. It is conservatively assumed, for dose calculations, that all the Holtite in the HI-TRAC is lost.

Due to the increased temperatures the MPC experiences as a result of the fire accident in the HI-TRAC transfer cask, the MPC internal pressure increases. The pressure rise is computed using the Ideal Gas Law and upperbound helium backfill pressure defined in Table 1.III.1 and results tabulated in Table 4.III.9. The computed MPC accident pressure is substantially below the accident design pressure (Table 2.2.1).

An alternate method using the FLUENT thermal model described in Section 4.III.5 can be adopted to evaluate HI-TRAC site-specific fire accident event. Principal modeling steps and acceptance criteria are defined in Table 4.6.11.

(b) Flood

The flood accident is defined in Chapter 2 as a deep submergence event. The worst flood from a thermal perspective is a "smart flood" that just rises to the top of the inlets to prevent airflow without the benefit of MPC cooling by water. This effect is bounded by the 100% inlets ducts blockage accident evaluated herein in Section 4.III.6.2(d).

(c) Burial Under Debris

This accident event is defined in Paragraph 4.6.2.5. The methodology for the burial under debris evaluation in Section 4.6 is employed to determine the minimum available time for the fuel cladding to reach the accident limit. Using the equation presented in Paragraph 4.6.2.5 and same clad temperature margin presented in Table 4.6.6, burial time is obtained and presented in Table 4.III.16. The coincident MPC pressure is also computed and compared with the accident design pressure (Table 2.2.1). The result (Table 4.III.16) is confirmed to be below the permissible limit.

Alternatively, the licensing basis model from Section 4.III.4 can be used to compute the time limit under any postulated site-specific burial accident. The licensing basis 3D model shall be modified

1 Computed by adding the fire temperature rise to initial fuel temperature (Table 4.III.6).

to include the site-specific burial conditions. For example, the portion of the cask buried under debris is assumed to be insulated. An evaluation shall be performed using this thermal model to compute the burial time for the respective MPC heat load such that all component temperature and pressure limits set forth in Chapter 2 are satisfied.

(d) 100% Blockage of Air Ducts

This accident is defined in Section 4.6 as 100% blockage of the air inlet ducts. This event is evaluated by blocking the air inlets in the FLUENT thermal model and computing the temperature rise of the MPC and stored fuel with time. The results of the blocked ducts transient analysis that support the required action completion times for clearing the inlets are tabulated in Table 4.III.7. The results show that fuel cladding and component temperatures remain below their respective accident limits specified in Chapter 2 and Supplement 4.III. The increase in temperature results in a concomitant rise of the MPC pressure. The maximum accident pressure tabulated in Table 4.III.7 is below the design limit specified in Chapter 2.

Since the temperatures of MPC-68M are bounded by the MPCs evaluated in Chapter 4, threshold heat load defined in Table 4.6.8a can also be adopted for MPC-68M. A threshold heat load is defined in Table 4.6.8a at or below which periodic surveillance or vent blockage corrective actions defined in Sub-Section 11.2.13.2 are applicable.

(e) Extreme Environmental Temperature

The accident event is defined in Paragraph 4.6.2.3. The principal effect of elevated ambient temperature is a rise of the HI-STORM 100 temperatures from the baseline normal storage temperatures by the difference between elevated ambient and normal ambient temperatures. The results of this event (maximum temperatures and pressures) are provided in Table 4.III.17. The results are below the accident condition temperature and pressure limits (Tables 2.2.1, 4.III.2 and 2.2.3).

(f) 100% Rods Rupture Accident

In accordance with NUREG-1536 a 100% rods rupture accident is evaluated assuming 100% of the rods fill gases and fission gases release in accordance with NUREG-1536 release fractions. The MPC-68M pressure under this postulated accident is computed and tabulated in Table 4III.4. The pressure is below the accident design pressure (Table 2.2.1).

(g) Jacket Water Loss

The principal effect of jacket water loss accident is a temperature increment in the stored fuel and MPC from the baseline conditions under in a HI-TRAC. As the MPC-68M temperatures in the HI-TRAC are bounded by MPC-32 temperatures (see Table 4.5.6) the jacket water loss temperatures are likewise bounded by the HI-TRAC jacket water loss evaluation in Section 4.6.

4.III.7 REGULATORY COMPLIANCE

PWR fuel assemblies may contain burnable poison rod assemblies (BPRAs) with any number of full-length rods and thimble plug rodlets in the locations without a full-length rod, thimble plug devices (TPDs), control rod assemblies (CRAs) or axial power shaping rod assemblies (APSRs), neutron source assemblies (NSAs) or similarly named devices. These non-fuel hardware devices are an integral part of PWR fuel assemblies and therefore the HI-STORM 100 System has been designed to store PWR fuel assemblies with or without these devices. Since each device occupies the same location within a fuel assembly, a single PWR fuel assembly will not contain multiple devices, with the exception of instrument tube tie rods (ITTRs), which may be stored in the assembly along with other types of non-fuel hardware.

In order to offer the user more flexibility in fuel storage, the HI-STORM 100 System offers two different loading patterns in the MPC-24, MPC-24E, MPC-24EF, MPC-32, MPC-32F, MPC-68, and the MPC-68FF. These patterns are uniform and regionalized loading as described in Section 2.0.1 and 2.1.6, and both loading patterns are discussed in this chapter.

The sections that follow will demonstrate that the design of the HI-STORM 100 dry cask storage system fulfills the following acceptance criteria outlined in the Standard Review Plan, NUREG-1536 [5.2.1]:

Acceptance Criteria

1. The minimum distance from each spent fuel handling and storage facility to the controlled area boundary must be at least 100 meters. The “controlled area” is defined in 10CFR72.3 as the area immediately surrounding an ISFSI or monitored retrievable storage (MRS) facility, for which the licensee exercises authority regarding its use and within which ISFSI operations are performed.

2. The cask vendor must show that, during both normal operations and anticipated occurrences, the radiation shielding features of the proposed dry cask storage system are sufficient to meet the radiation dose requirements in Sections 72.104(a). Specifically, the vendor must demonstrate this capability for a typical array of casks in the most bounding site configuration. For example, the most bounding configuration might be located at the minimum distance (100 meters) to the controlled area boundary, without any shielding from other structures or topography.

3. Dose rates from the cask must be consistent with a well established “as low as reasonably achievable” (ALARA) program for activities in and around the storage site.

4. After a design-basis accident, an individual at the boundary or outside the controlled area shall not receive a dose greater than the limits specified in 10CFR 72.106.

5. The proposed shielding features must ensure that the dry cask storage system meets the regulatory requirements for occupational and radiation dose limits for individual members of the public, as prescribed in 10 CFR Part 20, Subparts C and D.

5.1 DISCUSSION AND RESULTS

The principal sources of radiation in the HI-STORM 100 System are:

- Gamma radiation originating from the following sources

  1. Decay of radioactive fission products
  2. Secondary photons from neutron capture in fissile and non-fissile nuclides
  3. Hardware activation products generated during core operations

- Neutron radiation originating from the following sources

  1. Spontaneous fission
  2. α,n reactions in fuel materials
  3. Secondary neutrons produced by fission from subcritical multiplication
  4. γ,n reactions (this source is negligible)
  5. Dresden Unit 1 antimony-beryllium neutron sources

During loading, unloading, and transfer operations, shielding from gamma radiation is provided by the steel structure of the MPC and the steel, lead, and water of the HI-TRAC transfer cask. For storage, the gamma shielding is provided by the MPC, and the steel and concrete of the overpack. Shielding from neutron radiation is provided by the concrete of the overpack during storage and by the water of the HI-TRAC transfer cask during loading, unloading, and transfer operations. Additionally, in the HI-TRAC 125 and 125D top lid and the transfer lid of the HI-TRAC 125, a solid neutron shielding material, Holtite-A is used to thermalize the neutrons. Boron carbide, dispersed in the solid neutron shield material utilizes the high neutron absorption cross section of ^{10}B to absorb the thermalized neutrons.

The shielding analyses were performed with MCNP-4A [5.1.1] developed by Los Alamos National Laboratory (LANL). The source terms for the design basis fuels were calculated with the SAS2H and ORIGEN-S sequences from the SCALE 4.3 system [5.1.2, 5.1.3]. The additional shielding analyses were performed with the updated version of MCNP (MCNP5-1.51) [5.1.4] using the source terms determined by the TRITON/ORIGAMI sequence from SCALE 6.2.1 [5.1.5]. A detailed description of the MCNP models and the source term calculations are presented in Sections 5.3 and 5.2, respectively.

The design basis zircaloy clad fuel assemblies used for calculating the dose rates presented in this chapter are B&W 15x15 and the GE 7x7, for PWR and BWR fuel types, respectively. The design basis intact 6x6 and mixed oxide (MOX) fuel assemblies are the GE 6x6. The GE 6x6 is also the design basis damaged fuel assembly for the Dresden Unit 1 and Humboldt Bay array classes. Section 2.1.9 specifies the acceptable intact zircaloy clad fuel characteristics and the acceptable damaged fuel characteristics.

The design basis stainless steel clad fuels are the WE 15x15 and the A/C 10x10, for PWR and BWR fuel types, respectively. Section 2.1.9 specifies the acceptable fuel characteristics of stainless steel clad fuel for storage.

The MPC-24, MPC-24E, MPC-24EF, MPC-32, MPC-32F, MPC-68, and MPC-68FF are qualified for storage of SNF with different combinations of maximum burnup levels and minimum cooling times. Section 2.1.9 specifies the acceptable maximum burnup levels and minimum cooling times for storage of zircaloy clad fuel in these MPCs. Section 2.1.9 also specifies the acceptable maximum burnup levels and minimum cooling times for storage of stainless steel clad fuel. The burnup and cooling time values in Section 2.1.9 were chosen based on an analysis of the maximum decay heat load that could be accommodated within each MPC. To limit the number of cases to be evaluated for each MPC, these bounding burnup and cooling time values are conservatively applied to all PWR and BWR array classes in the uniform and regionalized configurations. Section 5.2 of this chapter describes the choice of the design basis fuel assembly based on a comparison of source terms and also provides a description of how the allowable burnup and cooling times were derived.

Section 2.1.9 specifies that the maximum assembly average burnup for PWR and BWR fuel is 68,200 and 65,000 MWD/MTU, respectively. Nonetheless, in accordance with Tables 2.1.28 and 2.1.29, the analysis in this chapter conservatively considers burnups up to 75,000 and 70,000 MWD/MTU for PWR and BWR fuel, respectively.

The burnup and cooling time combinations listed below are representative of the acceptable uniform and regionalized loadings from Section 2.1.9. These combinations are used in the shielding analyses throughout this chapter to present meaningful results consistent with the dose rate limits discussed in the following subsection. This is considered sufficient for the purpose of this chapter to demonstrate reasonable assurance of an adequate level of safety. For illustrative purposes, Section 5.4.11 shows the dose rate results for the limiting contents, which encompass all allowable fuel burnups and cooling times from Section 2.1.9 permitted for the MPC-24, MPC-32 and MPC-68 canisters. All combinations were analyzed in the HI-STORM overpack and HI-TRAC transfer casks.

Zircaloy Clad Fuel		
MPC-24	**MPC-32**	**MPC-68**
60,000 MWD/MTU 3 year cooling	45,000 MWD/MTU 3 year cooling	50,000 MWD/MTU 3 year cooling
69,000 MWD/MTU 4 year cooling	60,000 MWD/MTU 4 year cooling	62,000 MWD/MTU 4 year cooling
75,000 MWD/MTU 5 year cooling	69,000 MWD/MTU 5 year cooling	65,000 MWD/MTU 5 year cooling

		70,000 MWD/MTU 6 year cooling
Stainless Steel Clad Fuel		
MPC-24	**MPC-32**	**MPC-68**
40,000 MWD/MTU 8 year cooling	40,000 MWD/MTU 9 year cooling	22,500 MWD/MTU 10 year cooling

Results are presented in this chapter for the single burnup and cooling time combination for zircaloy clad fuel from the above table which produces the highest dose rate at 1 meter from the midplane of the HI-STORM overpack and HI-TRAC transfer casks, unless stated otherwise. The burnup and cooling time combination may be different for normal and accident conditions and for the different overpacks.

As mentioned earlier, there are different versions of the HI-STORM overpack: the HI-STORM 100, the HI-STORM 100S, and the HI-STORM 100S Version B. Section 5.3 describes all three overpacks. However, since the HI-STORM 100S Version B overpack has higher dose rates at the inlet vents and slightly higher offsite dose rates than the other overpacks, results are only presented for the HI-STORM 100S Version B overpack.

The 100-ton HI-TRAC with the MPC-24 has higher normal condition dose rates at the mid-plane than the 100-ton HI-TRAC with the MPC-32 or the MPC-68. Therefore, the MPC-24 results are presented in this section and the MPC-24 was used for the dose exposure estimates in Chapter 10. The MPC-32 results, MPC-68 results, and additional MPC-24 results are provided in Section 5.4 for comparison. The 100-ton HI-TRAC with the MPC-24 also has higher accident condition dose rates at the mid-plane than the 100-ton HI-TRAC with the MPC-32 or the MPC-68. Therefore, the MPC-24 results for accident condition are presented in the section. Accident condition results for the MPC-32 and MPC-68 in the 100-ton HI-TRAC are not provided in this chapter. The HI-TRAC 100D is a variation on the 100-ton HI-TRAC with fewer radial ribs and a slightly different lower water jacket. Section 5.4 presents results for the HI-TRAC 100D with the MPC-32.

The HI-TRAC 100 and 100D dose rates bound the HI-TRAC 125 and 125D dose rates for the same burnup and cooling time combinations. Therefore, for illustrative purposes, the MPC-24 was the only MPC analyzed in the HI-TRAC 125 and 125D. Since the HI-TRAC 125D has fewer radial ribs, the dose rate at the midplane of the HI-TRAC 125D is higher than the dose rate at the midplane of the HI-TRAC 125. Therefore, the results on the radial surface are only presented for the HI-TRAC 125D in this chapter.

As a general statement, the dose rates for uniform loading presented in this chapter bound the dose rates for all acceptable uniform and regionalized loadings informed by the heat load limits from Section 2.1.9. For regionalized loading where higher burned or shorter cooled assemblies

are placed in the center of the cask, the dose rates would be substantially lower than the bounding dose rates presented here. For regionalized loading where the higher burned or shorter cooled assemblies are placed on the periphery, the dose rates could be closer to the bounding dose rates presented here. Section 5.4.9 provides an additional brief discussion on regionalized loading.

Unless otherwise stated all tables containing dose rates for design basis fuel refer to design basis intact zircaloy clad fuel.

5.1.1 Normal and Off-Normal Operations

Chapter 11 discusses the potential off-normal conditions and their effect on the HI-STORM 100 System. None of the off-normal conditions have any impact on the shielding analysis. Therefore, off-normal and normal conditions are identical for the purpose of the shielding evaluation.

The 10CFR72.104 criteria for radioactive materials in effluents and direct radiation during normal operations are:

1. During normal operations and anticipated occurrences, the annual dose equivalent to any real individual who is located beyond the controlled area, must not exceed 25 mrem to the whole body, 75 mrem to the thyroid and 25 mrem to any other critical organ.

2. Operational restrictions must be established to meet as low as reasonably achievable (ALARA) objectives for radioactive materials in effluents and direct radiation.

10CFR20 Subparts C and D specify additional requirements for occupational dose limits and radiation dose limits for individual members of the public. Chapter 10 specifically addresses these regulations.

In accordance with ALARA practices, design objective dose rates are established for the HI-STORM 100 System in Section 2.3.5.2 as the following:

- 300 mrem/hour on the radial surface of the overpack, 175 mrem/hour at the openings of the air vents, and 60 mrem/hour on the top of the overpack.
- 4000 mrem/hour on the radial surface of the transfer cask.

The HI-STORM overpack dose rates presented in this section are evaluated for the MPC-32, the MPC-68, and the MPC-24 with the representative burnup and cooling time combinations from Section 2.1.9 to present meaningful results consistent with the dose rate limits. Section 5.4.11 shows the dose rate results for the limiting contents, which encompass all allowable fuel burnups and cooling times from Section 2.1.9 permitted for these canisters.

Figure 5.1.13 identifies the locations of the dose points referenced in the dose rate summary tables for the HI-STORM 100S Version B overpack. Dose Points #1 and #3 are the locations of

Table 5.1.9

DOSE RATES FOR ARRAYS OF MPC-24
WITH DESIGN BASIS ZIRCALOY CLAD FUEL
AT VARYING BURNUP AND COOLING TIMES

Array Configuration	1 cask	2x2	2x3	2x4	2x5
HI-STORM 100S Version B Overpack					
60,000 MWD/MTU AND 3-YEAR COOLING					
Annual Dose (mrem/year) †	19.26	16.41	24.62	20.36	16.34
Distance to Controlled Area Boundary (meters) ††,	350	450	450	500	550
45,000 MWD/MTU AND 9-YEAR COOLING					
Annual Dose (mrem/year) †	23.56	14.30	21.46	15.89	19.86
Distance to Controlled Area Boundary (meters) ††	200	300	300	350	350

† 8760 hr. annual occupancy is assumed.

†† Dose location is at the center of the long side of the array.

Table 5.1.11

DOSE RATES ADJACENT TO HI-STORM 100S VERSION B OVERPACK
FOR NORMAL CONDITIONS
MPC-32 DESIGN BASIS ZIRCALOY CLAD FUEL AT REPRESENTATIVE
BURNUP AND COOLING TIME
45,000 MWD/MTU AND 3-YEAR COOLING

Dose Point† Location	**Fuel Gammas†† (mrem/hr)**	**^{60}Co Gammas (mrem/hr)**	**Neutrons (mrem/hr)**	**Totals (mrem/hr)**	**Totals with BPRAs (mrem/hr)**
1	41.37	70.98	14.80	127.15	130.10
2	239.51	0.32	4.24	244.08	261.07
3	11.22	17.82	5.51	34.54	40.95
4	12.02	4.29	4.11	20.43	22.78

† Refer to Figure 5.1.13.

†† Gammas generated by neutron capture are included with fuel gammas.

Table 5.1.12

DOSE RATES ADJACENT TO HI-STORM 100S VERSION B OVERPACK
FOR NORMAL CONDITIONS
MPC-24 DESIGN BASIS ZIRCALOY CLAD FUEL AT REPRESENTATIVE
BURNUP AND COOLING TIME
60,000 MWD/MTU AND 3-YEAR COOLING

Dose Point† Location	**Fuel Gammas†† (mrem/hr)**	**^{60}Co Gammas (mrem/hr)**	**Neutrons (mrem/hr)**	**Totals (mrem/hr)**	**Totals with BPRAs (mrem/hr)**
1	34.25	57.09	29.86	121.20	122.67
2	252.16	0.10	7.16	259.41	273.60
3	13.56	15.57	9.82	38.94	43.90
4	13.42	4.65	7.22	25.29	27.30

† Refer to Figure 5.1.13.

†† Gammas generated by neutron capture are included with fuel gammas.

Table 5.1.13

DOSE RATES ADJACENT TO HI-STORM 100S VERSION B OVERPACK
FOR NORMAL CONDITIONS
MPC-68 DESIGN BASIS ZIRCALOY CLAD FUEL AT REPRESENTATIVE
BURNUP AND COOLING TIME
50,000 MWD/MTU AND 3-YEAR COOLING

Dose Point† Location	**Fuel Gammas†† (mrem/hr)**	**^{60}Co Gammas (mrem/hr)**	**Neutrons (mrem/hr)**	**Totals (mrem/hr)**
1	20.15	56.22	18.80	95.17
2	211.31	0.12	6.38	217.81
3	4.39	18.15	3.73	26.27
4	7.76	5.05	3.40	16.20

† Refer to Figure 5.1.13.

†† Gammas generated by neutron capture are included with fuel gammas.

Table 5.1.14

DOSE RATES AT ONE METER FROM HI-STORM 100S VERSION B OVERPACK
FOR NORMAL CONDITIONS
MPC-32 DESIGN BASIS ZIRCALOY CLAD FUEL AT REPRESENTATIVE
BURNUP AND COOLING TIME
45,000 MWD/MTU AND 3-YEAR COOLING

Dose Point† Location	Fuel Gammas†† (mrem/hr)	^{60}Co Gammas (mrem/hr)	Neutrons (mrem/hr)	Totals (mrem/hr)	Totals with BPRAs (mrem/hr)
1	32.51	18.19	2.41	53.10	55.78
2	124.98	1.42	1.75	128.15	136.88
3	14.74	8.67	0.75	24.16	28.13
4	2.79	1.31	1.16	5.26	5.89

† Refer to Figure 5.1.13.

†† Gammas generated by neutron capture are included with fuel gammas.

Table 5.1.15

DOSE RATES AT ONE METER FROM HI-STORM 100S VERSION B OVERPACK
FOR NORMAL CONDITIONS
MPC-24 DESIGN BASIS ZIRCALOY CLAD FUEL AT REPRESENTATIVE
BURNUP AND COOLING TIME
60,000 MWD/MTU AND 3-YEAR COOLING

Dose Point† Location	**Fuel Gammas†† (mrem/hr)**	**^{60}Co Gammas (mrem/hr)**	**Neutrons (mrem/hr)**	**Totals (mrem/hr)**	**Totals with BPRAs (mrem/hr)**
1	33.12	16.07	4.80	54.00	55.76
2	129.84	1.15	2.84	133.83	141.21
3	15.89	7.23	1.30	24.42	27.44
4	3.22	1.41	2.36	6.99	7.54

† Refer to Figure 5.1.13.

†† Gammas generated by neutron capture are included with fuel gammas.

Table 5.1.16

DOSE RATES AT ONE METER FROM HI-STORM 100S VERSION B OVERPACK
FOR NORMAL CONDITIONS
MPC-68 DESIGN BASIS ZIRCALOY CLAD FUEL AT REPRESENTATIVE
BURNUP AND COOLING TIME
50,000 MWD/MTU AND 3-YEAR COOLING

Dose Point† Location	**Fuel Gammas†† (mrem/hr)**	**^{60}Co Gammas (mrem/hr)**	**Neutrons (mrem/hr)**	**Totals (mrem/hr)**
1	25.76	15.91	3.21	44.88
2	107.43	0.95	2.46	110.84
3	7.78	8.96	0.73	17.47
4	1.78	1.65	0.84	4.27

† Refer to Figure 5.1.13.

†† Gammas generated by neutron capture are included with fuel gammas.

5.2 SOURCE SPECIFICATION

The neutron and gamma source terms, decay heat values, and quantities of radionuclides available for release were calculated with the SAS2H and ORIGEN-S modules of the SCALE 4.3 system [5.1.2, 5.1.3]. SAS2H has been extensively compared to experimental isotopic validations and decay heat measurements. References [5.2.8] through [5.2.12] and [5.2.15] present isotopic comparisons for PWR and BWR fuels for burnups ranging to 47 GWD/MTU and reference [5.2.13] presents results for BWR measurements to a burnup of 57 GWD/MTU. A comparison of calculated and measured decays heats is presented in reference [5.2.14]. All of these studies indicate good agreement between SAS2H and measured data. Additional comparisons of calculated values and measured data are being performed by various institutions for high burnup PWR and BWR fuel. These new results, when published, are expected to further confirm the validity of SAS2H for the analysis of PWR and BWR fuel.

Sample input files for SAS2H and ORIGEN-S are provided in Appendices 5.A and 5.B, respectively. The gamma source term is actually comprised of three distinct sources. The first is a gamma source term from the active fuel region due to decay of fission products. The second source term is from ^{60}Co activity of the steel structural material in the fuel element above and below the active fuel region. The third source is from (n,γ) reactions described below.

The neutron and gamma source terms for the shielding analysis with the limiting MPC contents presented in Section 5.4.11 were calculated with the TRITON / ORIGAMI modules of the SCALE 6.2.1 code package [5.1.5]. These have already been used for the analyses documented in Supplement 5.II. This is an improved approach compared to the SAS2H / ORIGEN-S sequence from SCALE 4.3, using predefined assembly libraries and a 252-energy group structure. In general, the discussions and conclusions in this section are applicable to the source terms determined by the TRITON/ORIGAMI modules.

A description of the design basis zircaloy clad fuel for the source term calculations is provided in Table 5.2.1. The PWR fuel assembly described is the assembly that produces the highest neutron and gamma sources and the highest decay heat load for a given burnup and cooling time from the following fuel assembly classes listed in Table 2.1.1: B&W 15x15, B&W 17x17, CE 14x14, CE 16x16, WE 14x14, WE 15x15, WE 17x17, St. Lucie, and Ft. Calhoun. The BWR fuel assembly described is the assembly that produces the highest neutron and gamma sources and the highest decay heat load for a given burnup and cooling time from the following fuel assembly classes listed in Table 2.1.2: GE BWR/2-3, GE BWR/4-6, Humboldt Bay 7x7, and Dresden 1 8x8. Multiple SAS2H and ORIGEN-S calculations were performed to confirm that the B&W 15x15 and the GE 7x7, which have the highest UO_2 mass, bound all other PWR and BWR fuel assemblies, respectively. Section 5.2.5 discusses, in detail, the determination of the design basis fuel assemblies.

The design basis Humboldt Bay and Dresden 1 6x6 fuel assembly is described in Table 5.2.2. The fuel assembly type listed produces the highest total neutron and gamma sources from the fuel assemblies at Dresden 1 and Humboldt Bay. Table 5.2.21 provides a description of the design basis Dresden 1 MOX fuel assembly used in this analysis. The design basis 6x6 and

These enrichments are based on References [5.2.6] and [5.2.7]. Table 8 of reference [5.2.6] presents average enrichments for burnup ranges. The initial enrichments chosen in Table 5.2.24, for burnups up to 50,000 MWD/MTU, are approximately the average enrichments from Table 8 of reference [5.2.6] for the burnup range that is 5,000 MWD/MTU less than the ranges listed in Table 5.2.24. These enrichments are below the enrichments typically required to achieve the burnups that were analyzed. For burnups greater than 50,000 MWD/MTU, the data on historical and projected burnups available in the LWR Quantities Database in reference [5.2.7] and some additional data from nuclear plants was reviewed and conservatively low enrichments were chosen for each burnup range above 50,000 MWD/MTU.

Inherent to this approach of selecting minimum enrichments that bound the vast majority of discharged fuel is the fact that a small number of atypical assemblies will not be bounded. However, these atypical assemblies are very few in number (as evidenced by the referenced discharge data), and thus, it is unlikely that a single cask would contain several of these outlying assemblies. Further, because the approach is based on using minimum enrichments for given burnup ranges, any atypical assemblies that may exist are expected to have enrichments that are very near to the minimum enrichments used in the analysis. Therefore, the result is an insignificant effect on the calculated dose rates. Consequently, the minimum enrichment values used in the shielding analyses throughout this chapter are adequate to bound the fuel authorized by the limits in Section 2.1.9 for loading in the HI-STORM system. Nonetheless, even more conservative enrichment values discussed in Section 5.4.11.2 are assumed in the shielding analyses for the limiting contents presented in Section 5.4.11. Since the enrichment does affect the source term evaluation, it is recommended that the site-specific dose evaluation consider the enrichment for the fuel being stored.

The neutron source calculated for the design basis fuel assemblies for the MPC-24, MPC-32, and MPC-68 and the design basis 6x6 fuel are listed in Tables 5.2.15 through 5.2.18 in neutrons/s for varying burnup and cooling times. Table 5.2.23 provides the neutron source in neutrons/sec for the design basis MOX fuel assembly. ^{244}Cm accounts for approximately 92-97% of the total number of neutrons produced. Alpha,n reactions in isotopes other than ^{244}Cm account for approximately 0.3-2% of the neutrons produced while spontaneous fission in isotopes other than ^{244}Cm account for approximately 2-8% of the neutrons produced within the UO_2 fuel. In addition, any neutrons generated from subcritical multiplication, (n,2n) or similar reactions are properly accounted for in the MCNP calculation.

There is some uncertainty associated with the ORIGEN-S calculations due to uncertainty in the physics data (e.g. cross sections, decay constants, etc.) and the modeling techniques. References [5.2.9], [5.2.10], and [5.2.15] perform comparisons between calculations and experimental isotopic measurement data. These comparisons indicate that calculated to measured ratios for Cm-244 ranges from 0.81 to 0.95. These values provide representative insight into the entire range of possible error in the source term calculations. However, any non-conservatism associated with the uncertainty in the source term calculations is offset by the conservative nature of the source term and shielding calculations performed in this chapter, and therefore no adjustments were made to the calculated values.

comparison are provided in Table 5.2.27. These results indicate that the B&W 15x15 fuel assembly has the highest radiation source term of the zircaloy clad fuel assembly classes considered in Table 2.1.1. This fuel assembly also has the highest UO_2 mass (see Table 5.2.25) which confirms that, for a given initial enrichment, burnup, and cooling time, the assembly with the highest UO_2 mass produces the highest radiation source term. The power/assembly values used in Table 5.2.25 were calculated by dividing 110% of the thermal power for commercial PWR reactors using that array class by the number of assemblies in the core. The higher thermal power, 110%, was used to account for potential power uprates. The power level used for the B&W15 is an additional 17% higher for consistency with previous revisions of the FSAR which also used this assembly as the design basis assembly.

The Haddam Neck and San Onofre 1 classes are shorter stainless steel clad versions of the WE 15x15 and WE 14x14 classes, respectively. Since these assemblies have stainless steel clad, they were analyzed separately as discussed in Section 5.2.3. Based on the results in Table 5.2.27, which show that the WE 15x15 assembly class has a higher source term than the WE 14x14 assembly class, the Haddam Neck, WE 15x15, fuel assembly was analyzed as the bounding PWR stainless steel clad fuel assembly. The Indian Point 1 fuel assembly is a unique 14x14 design with a smaller mass of fuel and clad than the WE14x14. Therefore, it is also bounded by the WE 15x15 stainless steel fuel assembly.

As mentioned above, the design basis assembly has the highest neutron and gamma source term of the various array classes for the same burnup and cooling time. As discussed below in Section 5.2.5.3, the allowable burnup limits in Section 2.1.9, which bound the 14x14A array class were used with the design basis assembly for the analysis in this chapter because those burnups bound the burnups from all other PWR array classes. This approach assures that the calculated source terms and dose rates will be conservative.

5.2.5.2 BWR Design Basis Assembly

Table 2.1.2 lists the BWR fuel assembly classes that were evaluated to determine the design basis BWR fuel assembly. Since there are minor differences between the array types in the GE BWR/2-3 and GE BWR/4-6 assembly classes, these assembly classes were not considered individually but rather as a single class. Within that class, the array types, 7x7, 8x8, 9x9, and 10x10 were analyzed to determine the bounding BWR fuel assembly. Since the Humboldt Bay 7x7 and Dresden 1 8x8 are smaller versions of the 7x7 and 8x8 assemblies they are bounded by the 7x7 and 8x8 assemblies in the GE BWR/2-3 and GE BWR/4-6 classes. Within each array type, the fuel assembly with the highest UO_2 mass was analyzed. Since the variations of fuel assemblies within an array type are very minor, it is conservative to choose the assembly with the highest UO_2 mass. For a given array type of assemblies, the one with the highest UO_2 mass will produce the highest radiation source because, for a given burnup (MWD/MTU) and enrichment, it will have produced the most energy and therefore the most fission products. The Humboldt Bay 6x6, Dresden 1 6x6, and LaCrosse assembly classes were not considered in the determination of the bounding fuel assembly. However, these assemblies were analyzed explicitly as discussed below.

Table 5.2.26 presents the characteristics of the fuel assemblies analyzed to determine the design basis zircaloy clad BWR fuel assembly. The corresponding fuel assembly array class from Section 2.1.9 is also listed in the table. The fuel assembly listed for each array type is the assembly that has the highest UO_2 mass. All fuel assemblies in Table 5.2.26 were analyzed at the same burnup and cooling time. The initial enrichment used in these analyses is consistent with Table 5.2.24. The results of the comparison are provided in Table 5.2.28. These results indicate that the 7x7 fuel assembly has the highest radiation source term of the zircaloy clad fuel assembly classes considered in Table 2.1.2. This fuel assembly also has the highest UO_2 mass which confirms that, for a given initial enrichment, burnup, and cooling time, the assembly with the highest UO_2 mass produces the highest radiation source term. According to Reference [5.2.6], the last discharge of a 7x7 assembly was in 1985 and the maximum average burnup for a 7x7 during their operation was 29,000 MWD/MTU. This clearly indicates that the existing 7x7 assemblies have an average burnup and minimum cooling time that is well within the burnup and cooling time limits in Section 2.1.9. Therefore, the 7x7 assembly has never reached the burnup level analyzed in this chapter. However, in the interest of conservatism the 7x7 was chosen as the bounding fuel assembly array type. The power/assembly values used in Table 5.2.26 were calculated by dividing 120% of the thermal power for commercial BWR reactors by the number of assemblies in the core. The higher thermal power, 120%, was used to account for potential power uprates. The power level used for the 7x7 is an additional 4% higher for consistency with previous revisions of the FSAR which also used this assembly as the design basis assembly.

Since the LaCrosse fuel assembly type is a stainless steel clad 10x10 assembly it was analyzed separately. The maximum burnup and minimum cooling time for this assembly are limited to 22,500 MWD/MTU and 10-year cooling as specified in Section 2.1.9. This assembly type is discussed further in Section 5.2.3.

The Humboldt Bay 6x6 and Dresden 1 6x6 fuel are older and shorter fuel than the other array types analyzed and therefore are considered separately. The Dresden 1 6x6 was chosen as the design basis fuel assembly for the Humboldt Bay 6x6 and Dresden 1 6x6 fuel assembly classes because it has the higher UO_2 mass. Dresden 1 also contains a few 6x6 MOX fuel assemblies, which were explicitly analyzed as well.

Reference [5.2.6] indicates that the Dresden 1 6x6 fuel assembly has a higher UO_2 mass than the Dresden 1 8x8 or the Humboldt Bay fuel (6x6 and 7x7). Therefore, the Dresden 1 6x6 fuel assembly was also chosen as the bounding assembly for damaged fuel and fuel debris for the Humboldt Bay and Dresden 1 fuel assembly classes.

Since the design basis 6x6 fuel assembly can be intact or damaged, the analysis presented in Section 5.4.2 for the damaged 6x6 fuel assembly also demonstrates the acceptability of storing intact 6x6 fuel assemblies from the Dresden 1 and Humboldt Bay fuel assembly classes.

As mentioned above, the design basis assembly has the highest neutron and gamma source term of the various array classes for the same burnup and cooling time. As discussed below in Section 5.2.5.3, the allowable burnup limits in Section 2.1.9 which bound the 9x9G array class were used with the design basis assembly for the analysis in this chapter because those burnups

bound the burnups from all other BWR array classes. This approach assures that the calculated source terms and dose rates will be conservative.

5.2.5.3 Decay Heat Loads and Allowable Burnup and Cooling Times

Section 2.1.6 describes the calculation of the MPC maximum decay heat limits per assembly. These limits, which differ for uniform and regionalized loading, are presented in Section 2.1.9. The allowable burnup and cooling time limits are derived based on the allowable decay heat limits. Specifically, ORIGEN-S calculations were performed for enrichments ranging from 0.7 to 5.0 wt.% ^{235}U and burnups from 10,000 to 65,000 MWD/MTU for BWRs and 10,000 to 70,000 MWD/MTU for PWRs. The burnups were increased in 2,500 MWD/MTU increments. Using the ORIGEN-S data, different array classes or combinations of classes were analyzed separately to determine the allowable burnup as a function of cooling time for the specified allowable decay heat limits. Calculating allowable burnups for individual array classes is appropriate because even two assemblies with the same MTU may have a different allowable burnup for the same allowable cooling time and permissible decay heat. The heavy metal mass specified in Table 5.2.25 and 5.2.26 for the various array classes is the value that was used in the determination of the burnup as a function of cooling time and is the maximum for the respective assembly class.

There is some uncertainty associated with the ORIGEN-S calculations due to uncertainty in the physics data (e.g. cross sections, decay constants, etc.) and the modeling techniques. To estimate this uncertainty, an approach similar to the one in Reference [5.2.14] was used. The potential error in the ORIGEN-S decay heat calculations was estimated to be in the range of 3.5 to 5.5% for cooling times 2 to 40 years. The difference is due to the change in isotopes important to decay heat as a function of cooling time. In order to be conservative in the derivation of the allowable burnup, a uniform 5% decay heat penalty was applied for both the PWR and BWR array classes.

As a demonstration that the decay heat values used to determine the allowable burnups are conservative, a comparison between these calculated decay heats and the decay heats reported in Reference [5.2.7] are presented in Table 5.2.29. This comparison is made for a burnup of 30,000 MWD/MTU and a cooling time of 5 years. The burnup was chosen based on the limited burnup data available in Reference [5.2.7].

As limiting conditions, some simplifications and conservatisms are applied to the burnup and cooling time limits in Section 2.1.9 as follows:

- Since for a given cooling time and decay heat load, different array classes would have different allowable burnups, burnup and cooling time combinations that bound array classes 14x14A and 9x9G are used since these array class burnup and cooling time combinations bound the combinations from the other PWR and BWR array classes;
- The burnup and cooling time combinations are chosen to bound the maximum decay heat load that could be accommodated within an MPC; and

- These bounding limits are conservatively applied to all storage cells in the uniform and regionalized configurations.

As mentioned above, the fuel assembly burnup and cooling times in Section 2.1.9 were derived based on the decay heat limits which are also stipulated in Section 2.1.9. The burnup and cooling times for the non-fuel hardware, in Section 2.1.9, were chosen based on the radiation source term calculations discussed previously. The fuel assembly burnup, decay heat, and enrichment equations were derived without consideration for the decay heat from BPRAs, TPDs, CRAs, or APSRs. This is acceptable since the user of the HI-STORM 100 system is required to demonstrate compliance with the assembly decay heat limits in Section 2.1.9 regardless of the heat source (assembly or non-fuel hardware) and the actual decay heat from the non-fuel hardware is expected to be minimal. In addition, the shielding analysis presented in this chapter conservatively calculates the dose rates using both the burnup and cooling times for the fuel assemblies and non-fuel hardware. Therefore, the safety of the HI-STORM 100 system is guaranteed through the bounding analysis in this chapter, represented by the burnup and cooling time limits and dose rate limits in the CoC, and the bounding thermal analysis in Chapter 4, represented by the decay heat limits in the CoC.

5.2.5.4 Burnup, Enrichment and Cooling time values for Site Specific Dose Analyses

As discussed earlier in this Chapter, site-specific dose evaluations are required to show compliance with the regulatory requirements, and those need to consider the types, burnups, enrichments and cooling times of the fuel to be stored. Since it is impractical to evaluate every fuel assembly individually, a bounding approach is typically used where assemblies are grouped and bounding characteristics are selected and evaluated for each group. Recommendations and guidance for those selections are as follows:

For the fuel assembly type, the one approach would be to use the design basis assembly type, since this has been shown to bound all other assembly types (see Subsections 5.2.5.1 and 5.2.5.2). However, if this approach is considered too conservative, it is also acceptable to utilize a site-specific fuel assembly type. In this case, that fuel assembly type needs to be considered in both the radiation transport analyses and the source term evaluations.

For burnups, enrichments and cooling times, selecting an appropriate burnup and enrichment combination or combinations (for given lower bound cooling times) could be difficult, since the more conservative values are a higher burnup but a lower enrichment (see Subsection 5.2.2). One approach would be to have a single group, i.e. select bounding values for all those parameters: upper bound burnup, lower bound enrichment, and lower bound cooling time. However, this could be excessively conservative, since combinations of high burnup and low enrichment are typically not found in spent fuel. A more practical approach would be to establish several groups, each with an upper bound burnup and lower bound enrichment. A separate evaluation may be required for each group in that case. However, with the help of the information shown in Table 5.2.24 it may be possible to avoid multiple analyses and demonstrate compliance with a single set of burnup, enrichment and cooling time. To support this approach, the results of source term calculation for all burnup and enrichment combinations listed in the table were compared, for the entire neutron and photon energy spectrum used in the dose analyses. The comparison shows,

5.3 MODEL SPECIFICATIONS

The shielding analysis of the HI-STORM 100 System was performed with MCNP-4A [5.1.1]. MCNP is a Monte Carlo transport code that offers a full three-dimensional combinatorial geometry modeling capability including such complex surfaces as cones and tori. This means that no gross approximations were required to represent the HI-STORM 100 System, including the HI-TRAC transfer casks, in the shielding analysis. A sample input file for MCNP is provided in Appendix 5.C.

A newer version of the MCNP radiation transport code, namely MCNP5-1.51 [5.1.4], which is the same code as that used for the evaluation of the HI-STORM 100 System with the MPC-32M and MPC-68M canisters in Supplements 5.II and 5.III, respectively, is used for the additional shielding analyses with the limiting MPC contents presented in Section 5.4.11. For these calculations, the appropriate models of the HI-STORM 100S Version B and 100-ton HI-TRAC casks have been developed and some advanced modeling techniques have been applied in order to provide more fine results. Nevertheless, these new models are consistent with the reference design basis MCNP-4A models utilized in this chapter and they are considered applicable for the shielding calculations using the MCNP5-1.51 code. The comparison of the calculation results between the reference MCNP-4A models and MCNP5-1.51 models showed that the dose rates are in a good agreement, hence the applicability of the new models and modern computer codes for generic and site-specific shielding analyses of the HI-STORM 100 System is justified.

As discussed in Section 5.1.1, off-normal conditions do not have any implications for the shielding analysis. Therefore, the MCNP models and results developed for the normal conditions also represent the off-normal conditions. Section 5.1.2 discussed the accident conditions and stated that the only accidents that would impact the shielding analysis would be a loss of the neutron shield (water) in the HI-TRAC and the 30 day 100% blockage of air inlets for the HI-STORM overpack. Therefore, the MCNP model of the normal HI-TRAC condition has the neutron shield in place while the accident condition replaces the neutron shield with void. The MCNP model of the accident condition HI-STORM assumes a bounding volume of the neutron shield (concrete) loses all hydrogen and partial oxygen, and has corresponding lower density. This bounding volume correlates to all concrete in the cask body and lid that is at a temperature of at least 350°F.

5.3.1 Description of the Radial and Axial Shielding Configuration

Chapter 1 provides the drawings that describe the HI-STORM 100 System, including the HI-TRAC transfer casks. These drawings, using nominal dimensions, were used to create the MCNP models used in the radiation transport calculations. Modeling deviations from these drawings are discussed below. Figures 5.3.1 through 5.3.6 show cross sectional views of the HI-STORM 100 overpack and MPC as it was modeled in MCNP for each of the MPCs. Figures 5.3.1 through 5.3.3 were created with the MCNP two-dimensional plotter and are drawn to scale. The inlet and outlet vents were modeled explicitly, therefore, streaming through these components is accounted for in the calculations of the dose adjacent to the overpack and at 1 meter. Figure 5.3.7 shows a cross sectional view of the 100-ton HI-TRAC with the MPC-24 inside as it was modeled

5.4 SHIELDING EVALUATION

The MCNP-4A code was used for all of the shielding analyses [5.1.1], except those discussed in Section 5.4.11. MCNP is a continuous energy, three-dimensional, coupled neutron-photon-electron Monte Carlo transport code. Continuous energy cross section data are represented with sufficient energy points to permit linear-linear interpolation between points. The individual cross section libraries used for each nuclide are those recommended by the MCNP manual. All of these data are based on ENDF/B-V data. MCNP has been extensively benchmarked against experimental data by the large user community. References [5.4.2], [5.4.3], and [5.4.4] are three examples of the benchmarking that has been performed.

The energy distribution of the source term, as described earlier, is used explicitly in the MCNP model. A different MCNP calculation is performed for each of the three source terms (neutron, decay gamma, and ^{60}Co). The axial distribution of the fuel source term is described in Table 2.1.11 and Figures 2.1.3 and 2.1.4. The PWR and BWR axial burnup distributions were obtained from References [5.4.5] and [5.4.6], respectively. These axial distributions were obtained from operating plants and are representative of PWR and BWR fuel with burnups greater than 30,000 MWD/MTU. The ^{60}Co source in the hardware was assumed to be uniformly distributed over the appropriate regions.

It has been shown that the neutron source strength varies as the burnup level raised by the power of 4.2. Since this relationship is non-linear and since the burnup in the axial center of a fuel assembly is greater than the average burnup, the neutron source strength in the axial center of the assembly is greater than the relative burnup times the average neutron source strength. In order to account for this effect, the neutron source strength in each of the 10 axial nodes listed in Table 2.1.11 was determined by multiplying the average source strength by the relative burnup level raised to the power of 4.2. The peak relative burnups listed in Table 2.1.11 for the PWR and BWR fuels are 1.105 and 1.195 respectively. Using the power of 4.2 relationship results in a 37.6% ($1.105^{4.2}/1.105$) and 76.8% ($1.195^{4.2}/1.195$) increase in the neutron source strength in the peak nodes for the PWR and BWR fuel, respectively. The total neutron source strength increases by 15.6% for the PWR fuel assemblies and 36.9% for the BWR fuel assemblies.

MCNP was used to calculate doses at the various desired locations. MCNP calculates neutron or photon flux and these values can be converted into dose by the use of dose response functions. This is done internally in MCNP and the dose response functions are listed in the input file in Appendix 5.C. The response functions used in these calculations are listed in Table 5.4.1 and were taken from ANSI/ANS 6.1.1, 1977 [5.4.1].

The dose rates at the various locations were calculated with MCNP using a two step process. The first step was to calculate the dose rate for each dose location per starting particle for each neutron and gamma group in the fuel and each axial location in the end fittings. The second and last step was to multiply the dose rate per starting particle for each group or starting location by the source strength (i.e. particles/sec) in that group or location and sum the resulting dose rates

for all groups in each dose location. The standard deviations of the various results were statistically combined to determine the standard deviation of the total dose in each dose location.

As discussed in Section 5.1, the HI-STORM shielding analysis was performed for conservative burnup and cooling time combinations which are representative of the uniform and regionalized loading specifications for zircaloy clad fuel specified in Section 2.1.9.

Tables 5.1.11 through 5.1.13 provide the maximum dose rates adjacent to the HI-STORM overpack during normal conditions for each of the MPCs. Tables 5.1.14 through 5.1.16 provide the maximum dose rates at one meter from the overpack. A detailed discussion of the normal, off-normal, and accident condition dose rates is provided in Sections 5.1.1 and 5.1.2.

Tables 5.1.7 and 5.1.8 provide dose rates for the 100-ton and 125-ton HI-TRAC transfer casks, respectively, with the MPC-24 loaded with design basis fuel in the normal condition, in which the MPC is dry and the HI-TRAC water jacket is filled with water. Table 5.4.2 shows the corresponding dose rates adjacent to and one meter away from the 100-ton HI-TRAC for the fully flooded MPC condition with an empty water-jacket (condition in which the HI-TRAC is removed from the spent fuel pool). Table 5.4.3 shows the dose rates adjacent to and one meter away from the 100-ton HI-TRAC for the fully flooded MPC condition with the water jacket filled with water (condition in which welding operations are performed). Dose locations 4 and 5, which are on the top and bottom of the HI-TRAC were not calculated at the one-meter distance for these configurations. For the conditions involving a fully flooded MPC, the internal water level was 10 inches below the MPC lid. These dose rates represent the various conditions of the HI-TRAC during operations. Comparing these results to Table 5.1.7 indicates that the dose rates in the upper and lower portions of the HI-TRAC are reduced by about 50% with the water in the MPC. The dose at the center of the HI-TRAC is reduced by approximately 50% when there is also water in the water jacket and is essentially unchanged when there is no water in the water jacket as compared to the normal condition results shown in Table 5.1.7.

The burnup and cooling time combination of 60,000 MWD/MTU and 3 years was selected for the 100-ton MPC-24 HI-TRAC analysis, and this combination is representative of all other requested combinations in the 100-ton HI-TRAC. The dose rate at 1 meter from the pool lid was not calculated because a concrete floor was placed 6 inches below the pool lid to account for potential ground scattering. These results in Table 5.1.7 clearly indicate that gammas are the dominant portion of the total dose rate. Therefore, as the burnup and cooling time increase, the reduction in the gamma dose rate due to the increased cooling time results in a net decrease in the total dose rate.

In contrast, the dose rates surrounding the HI-TRAC 125 and 125D transfer casks have significantly higher neutron component. Therefore, the dose rates at 75,000 MWD/MTU burnup and 5 year cooling are higher than the dose rates at 60,000 MWD/MTU burnup and 3 year cooling. The dose rates for the 125-ton HI-TRACs with the MPC-24 at 75,000 MWD/MTU and 5 year cooling are listed in Table 5.1.8 of Section 5.1.

and MPC-68, respectively. For the MPC-24, where region 1 contains 12 (50% of total) assemblies, the contribution would be similar.

- Approximately 1% and 2% of the photon dose at the edge of the water jacket comes from region 1 fuel assemblies in the MPC-32 and MPC-68, respectively. For the MPC-24, where some corners of the region 1 assemblies are not completely shielded by the outer assemblies, the contribution of the photon dose from region 1 would be slightly larger than for the MPC-32 and MPC-68, but the gamma dose rates would still be dominated by the outer assemblies.

These results clearly indicate that the outer fuel assemblies shield almost the entire gamma source from the inner assemblies in the radial direction and a significant percentage of the neutron source. The conclusion from this analysis is that the total dose rate on the external radial surfaces of the cask can be greatly reduced by placing longer cooled and lower burnup fuels on the outside of the basket. Note that for the MPC-24 there may be localized higher dose rates using regionalized loading, since the inner region is not totally surrounded by the outer region. However, the dose rates would always be bounded by the values presented in this chapter. In the axial direction, regionalized loading with higher burnup fuel on the inside results in higher dose rates in the center portion of the cask since the region 2 assemblies are not shielding the region 1 assemblies for axial dose locations.

Note that the regionalized loading scheme also allows placing higher burned or shorter cooled assemblies on the periphery of the basket. In this case, dose rate would be closer to the bounding values presented here. This configuration should only be used if it is not feasible to place such assemblies in the center of the cask.

Burnup and cooling time combinations which bound both regionalized loading and uniform loading patterns were analyzed. Therefore, dose rates for specific regionalized loading patterns are not presented in this chapter. Section 5.4.9 provides a brief additional discussion on regionalized loading dose rates. Additionally, the bounding dose rate results for the limiting contents, which encompass all allowable fuel burnups and cooling times from Section 2.1.9 permitted for the MPC-24, MPC-32 and MPC-68 canisters, are provided in Section 5.4.11 for illustrative purposes.

Unless otherwise stated all tables containing dose rates for design basis fuel refer to design basis intact zircaloy clad fuel.

Since MCNP is a statistical code, there is an uncertainty associated with the calculated values. In MCNP the uncertainty is expressed as the relative error which is defined as the standard deviation of the mean divided by the mean. Therefore, the standard deviation is represented as a percentage of the mean. The relative error for the total dose rates presented in this chapter were typically less than 5% and the relative error for the individual dose components was typically less than 10%.

same as the results from a single calculation. However, the advantage of the two-stage process is that each stage can be optimized independently.

The annual dose, assuming 100% occupancy (8760 hours), at 350 meters from a single HI-STORM 100S Version B cask is presented in Table 5.4.6 for the design basis burnup and cooling time analyzed. This table indicates that the dose due to neutrons is 2.8 % of the total dose. This is an important observation because it implies that simplistic analytical methods such as point kernel techniques may not properly account for the neutron transmissions and could lead to low estimates of the site boundary dose.

The annual dose, assuming 8760 hour occupancy, at distance from an array of casks was calculated in three steps.

1. The annual dose from the radiation leaving the side of the HI-STORM 100S Version B overpack was calculated at the distance desired. Dose value = A.

2. The annual dose from the radiation leaving the top of the HI-STORM 100S Version B overpack was calculated at the distance desired. Dose value = B.

3. The annual dose from the radiation leaving the side of a HI-STORM 100S Version B overpack, when it is behind another cask, was calculated at the distance desired. The casks have an assumed 15-foot pitch. Dose value = C.

The doses calculated in the steps above are listed in Table 5.4.7 for the representative burnup and cooling time of 60,000 MWD/MTU and 3-year cooling. Using these values, the annual dose (at the center of the long side) from an arbitrary 2 by Z array of HI-STORM 100S Version B overpacks can easily be calculated. The following formula describes the method.

Z = number of casks along long side

Dose = ZA + 2ZB + ZC

As an example, the dose from a 2x3 array at 450 meters is presented.

1. The annual dose from the side of a single cask: Dose A = 6.81
2. The annual dose from the top of a single cask: Dose B = 1.78E-2
3. The annual dose from the side of a cask positioned behind another cask:
   Dose C = 1.36

Using the formula shown above (Z=3), the total dose at 450 meters from a 2x3 array of HI-STORM overpacks is 24.62 mrem/year, assuming a 8760 hour occupancy.

Per Supplement 5.III, the effect of the design differences between the MPC-68 and MPC-68M on the dose rates is small and all results and conclusions from the MPC-68 are applicable to the MPC-68M. Therefore, the thoria rod canister is also acceptable for storage in the MPC-68M.

5.4.9 Regionalized Loading Dose Rate Evaluation

Section 2.1.9 describes the regionalized loading scheme available in the HI-STORM 100 system. Depending on the choice of X (the ratio of inner region assembly heat load to outer region assembly heat load), higher heat load fuel (higher burnup and shorter cooling time) may be placed in either region 1 or region 2. If X is greater than 1, the higher heat load fuel is placed in region 1 and shielded by lower heat load fuel in region 2. This configuration produces the lowest dose rates since the older colder fuel is being used as shielding for the younger hotter fuel. If X is less than 1, then the younger hotter fuel is placed on the periphery of the basket and the older colder fuel is placed on the interior of the basket. This configuration will result in higher radial dose rates than for configurations with X greater than or equal to 1. In order to perform a bounding shielding analysis, the burnup and cooling time combinations listed in Tables 2.1.28 and 2.1.29 were chosen to bound all values of X. All fuel assemblies in an MPC were assumed to have the same burnup and cooling time in the shielding analysis. This approach results in dose rates calculated in this chapter that bound all allowable regionalized and uniform loading burnup and cooling time combinations.

5.4.10 Fuel Assemblies with Stainless Steel Replacement Rods Dose Rate Evaluation

A dose rate evaluation for the HI-STORM 100S Version B containing the MPC-32 and the MPC-68 is performed to determine the impact of storing fuel assemblies with irradiated stainless steel replacement rods. The stainless steel rods are irradiated in the same neutron flux and for the same time period as the design basis PWR and BWR UO2 fuel rods. The dose rates at several locations, adjacent to and at 1 meter, from the HI-STORM containing the MPC-32 are presented in Table 5.1.11 and Table 5.1.14, respectively. The dose rates for the HI-STORM containing the MPC-68 are presented in Tables 5.1.13 and Table 5.1.16. The dose rates at the same locations are calculated assuming all 32 design basis PWR assemblies contain 4 irradiated stainless steel replacement rods and all 68 design basis BWR assemblies contain 2 irradiated stainless steel replacement rods. The dose rates with the 4 irradiated stainless steel replacement rods in the design basis PWR assembly are approximately 10% higher at the sides and top of the HI-STORM containing the MPC-32. The dose rates with the 2 irradiated stainless steel replacement rods in the design basis BWR assembly are approximately 33% higher at the sides and top of the HI-STORM containing the MPC-68. Therefore, fuel assemblies containing irradiated stainless steel replacement rods are acceptable for storage and, if present in a fuel assembly, need to be considered in the site specific dose calculations.

5.4.11 Limiting Content Evaluation

5.4.11.1 General

As discussed in Section 5.1, results are presented for the representative burnup and cooling times that result in radial dose rates consistent with the dose limits selected for ALARA purposes. The additional shielding calculations in this section are performed to illustrate the maximum dose rates for the HI-STORM 100 System under normal conditions, when loaded with the limiting contents specified in Section 2.1.9. Specifically, all allowable fuel burnups and cooling times from Section 2.1.9 permitted for the MPC-24, MPC-32 and MPC-68 canisters are evaluated, and the maximum possible dose rate over the entire range of qualified content is determined separately for each relevant dose location. Note that the maximum dose rate at different locations may be from different burnup and cooling time combinations. Hence the reported maximum dose rates for all principal locations may not be from a single burnup and cooling time combination out of the set. The initial enrichments used in the analysis are discussed in Section 5.4.11.2.

In order to perform a bounding shielding analysis, all burnups and cooling time combinations are analyzed in the HI-STORM 100S Version B overpack and 100-ton HI-TRAC transfer cask, which produce higher dose rates. The calculations are performed using the MCNP5-1.51 code and the source terms determined by the TRITON/ORIGAMI sequence from SCALE 6.2.1.

Results of the calculations, showing only total dose rates for all relevant surface and 1 m dose locations, are summarized and compared in Tables 5.4.21 and 5.4.22. The dose rates presented for the MPC-24 and MPC-32 canisters include the contribution from BPRAs. The results and comparisons show that for bounding content, the external dose rates would be unacceptably high, justifying the introduction of the dose limit. However, these are just examples provided to the users of the system, the only formal restriction is the dose rate limits on the outside of the casks. It should be noted that bounding content is used in the analysis of the accident conditions in Section 5.1, to avoid any complication in showing compliance with the corresponding regulatory requirements. Hence additional site specific evaluations for accident conditions are not required.

5.4.11.2 Fuel Enrichment

As discussed in Subsection 5.2.2, enrichments have a significant impact on neutron dose rates, with lower enrichments resulting in higher neutron dose rates for the same burnup and cooling time. For assemblies with higher burnups (where the neutron contribution to the total dose rate is higher) and/or locations that are more neutron dominated, the enrichment would therefore be important in order to present dose rates in a conservative way. However, it would be impractical and excessively conservative to perform all calculations at bounding low enrichment, since low enrichments are generally only found in lower burned assemblies. Therefore, a conservatively low enrichment value was specified in Table 5.2.24 and used in the analyses for various burnup

ranges from 20,000 - 75,000 MWD/MTU for PWR and 20,000 - 70,000 MWD/MTU for BWR zircaloy clad fuel.

Nevertheless, to ensure that the dose rates calculated in this section for the limiting content are bounding for the entire range of qualified enrichments, even more conservative enrichment values based on industry information on more than 130,000 PWR and 185,000 BWR assemblies are assumed. For the selection, the fuel assemblies are sorted into burnup bins (i.e., 0 5, 5-10 … 70-75 GWd/mtU). The bins do not overlap, so for the burnup bin of 5-10 GWd/mtU, the data set includes the enrichments for the fuel assemblies with the burnup from 5,000 MWd/mtU to 9,999 MWd/mtU. Then, in each burnup bin, the enrichments are sorted from low to high, and the enrichment value that bounds 99% of the assemblies in that bin (from below) is used for calculations for assemblies with the burnup of this bin. The determined enrichment values are provided in Table 5.4.20, and, with all the data analyzed, are also visually shown in Figures 5.4.1 and 5.4.2.

Given that the considered baskets contain a relatively large number of assemblies, selecting the minimum enrichment for each assembly this way is considered reasonably conservative. The typical content of the basket would have most assemblies well above the lower bound enrichment assumed in the analyses, so even if a small number of assemblies would fall below the assumed minimum, the effect on dose rates would be negligible or inconsequential. Furthermore, the site-specific shielding analyses will consider actual or bounding fuel enrichment. Therefore, an explicit lower enrichment limit is not considered necessary.

Table 5.4.20

LOWER BOUND ENRICHMENTS USED IN THE SOURCE TERMS CALCULATIONS

Burnup Range[1] (MWD/MTU)	Initial Enrichment (wt% ^{235}U)	
	BWR Fuel	PWR Fuel
0,000-5,000	0.7	0.3
5,000-10,000	0.7	1.1
10,000-15,000	0.9	1.1
15,000-20,000	1.5	1.1
20,000-25,000	1.6	1.6
25,000-30,000	2.0	2.0
30,000-35,000	2.4	2.4
35,000-40,000	2.7	2.6
40,000-45,000	3.0	3.0
45,000-50,000	3.2	3.3
50,000-55,000	3.3	3.6
55,000-60,000	3.7	3.6
60,000-65,000	3.7	3.9
65,000-70,000	3.7	4.2
70,000-75,000	4.0	4.2

[1] Note: The burnup ranges do not overlap. Therefore, 20,000-25,000 MWD/MTU means 20,000-24,999.9 MWD/MTU, etc. This note does not apply to the maximum burnups of 75,000 MWD/MTU.

Table 5.4.21

TOTAL DOSE RATES AROUND THE 100-TON HI-TRAC
FOR DIFFERENT MPCs WITH THE BOUNDING CONTENT

Dose Point Location	Total Dose Rates (mrem/hr)		
	MPC-24	MPC-32	MPC-68
ADJACENT TO THE 100-TON HI-TRAC			
1	1856	2222	2270
2	4609	4355	4435
3	1550	2413	1773
4	1430	1731	1106
5	11102	12450	10429
ONE METER FROM THE 100-TON HI-TRAC			
1	696	794	742
2	1809	1833	1829
3	571	658	435
4	491	599	401

Notes:
- Refer to Figure 5.1.4 for dose locations.

Table 5.4.22

TOTAL DOSE RATES AROUND THE HI-STORM 100S VERSION B
FOR DIFFERENT MPCs WITH THE BOUNDING CONTENT

Dose Point Location	Total Dose Rates (mrem/hr)		
	MPC-24	MPC-32	MPC-68
ADJACENT TO THE OVERPACK			
1	124	149	125
2	357	368	392
3	51	62	38
4	28	31	19
ONE METER FROM THE OVERPACK			
1	52	57	59
2	185	191	201
3	28	32	23
4	11	11	6

Notes:

- Refer to Figure 5.1.13 for dose locations.

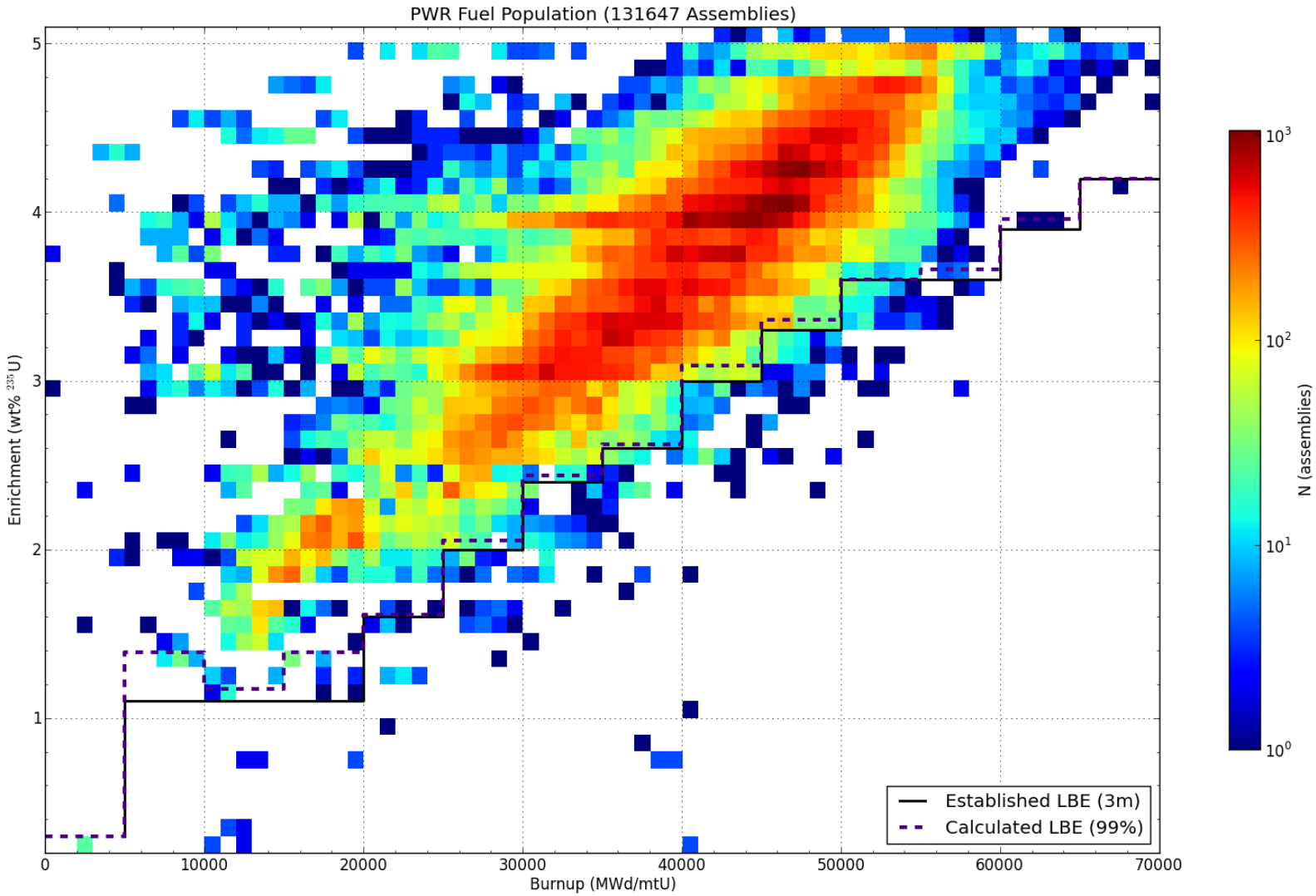

FIGURE 5.4.1: LOWER BOUND INITIAL ENRICHMENT BASED ON PWR FUEL DATA

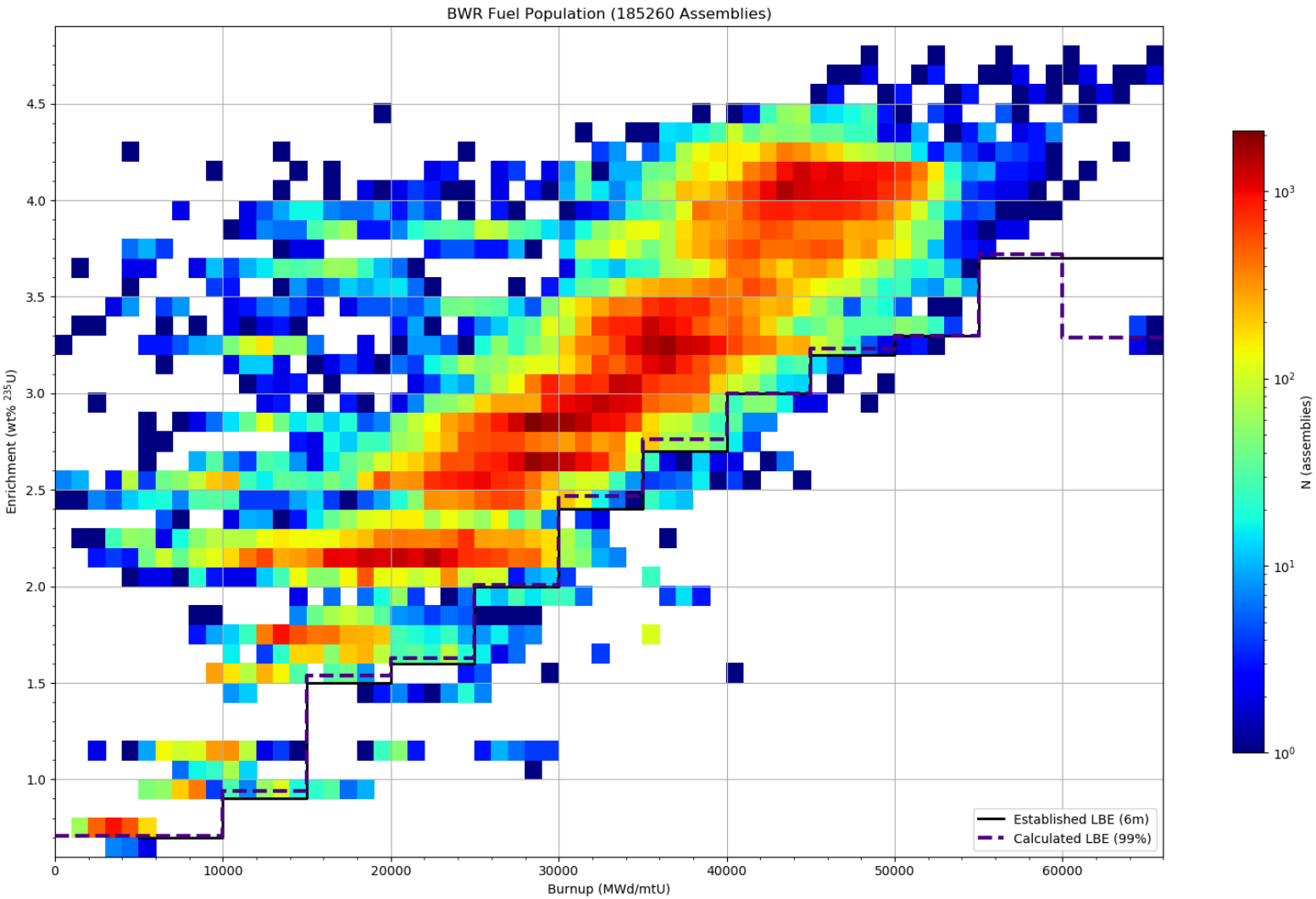

FIGURE 5.4.2: LOWER BOUND INITIAL ENRICHMENT BASED ON BWR FUEL DATA

5.6 REFERENCES

[5.1.1] J.F. Briesmeister, Ed., "MCNP - A General Monte Carlo N-Particle Transport Code, Version 4A." Los Alamos National Laboratory, LA-12625-M (1993).

[5.1.2] O.W. Hermann, C.V. Parks, "SAS2H: A Coupled One-Dimensional Depletion and Shielding Analysis Module," NUREG/CR-0200, Revision 5, (ORNL/NUREG/CSD-2/V2/R5), Oak Ridge National Laboratory, September 1995.

[5.1.3] O.W. Hermann, R.M. Westfall, "ORIGEN-S: SCALE System Module to Calculate Fuel Depletion, Actinide Transmutation, Fission Product Buildup and Decay, and Associated Radiation Source Terms," NUREG/CR-0200, Revision 5, (ORNL/NUREG/CSD-2/V2/R5), Oak Ridge National Laboratory, September 1995.

[5.1.4] X-5 Monte Carlo Team, MCNP - A General Monte Carlo N-Particle Transport Code, Version 5, LA-UR-03-1987, Los Alamos National Laboratory, April 2003 (Revised 2/1/2008).

[5.1.5] B. T. Rearden and M. A. Jessee, Eds., SCALE Code System, ORNL/TM-2005/39, Version 6.2.1, Oak Ridge National Laboratory, Oak Ridge, Tennessee (2016).

[5.2.1] NUREG-1536, SRP for Dry Cask Storage Systems, USNRC, Washington, DC, January 1997.

[5.2.2] A.G. Croff, M.A. Bjerke, G.W. Morrison, L.M. Petrie, "Revised Uranium-Plutonium Cycle PWR and BWR Models for the ORIGEN Computer Code," ORNL/TM-6051, Oak Ridge National Laboratory, September 1978.

[5.2.3] A. Luksic, "Spent Fuel Assembly Hardware: Characterization and 10CFR 61 Classification for Waste Disposal," PNL-6906-vol. 1, Pacific Northwest Laboratory, June 1989.

[5.2.4] J.W. Roddy et al., "Physical and Decay Characteristics of Commercial LWR Spent Fuel," ORNL/TM-9591/V1&R1, Oak Ridge National Laboratory, January 1996.

[5.2.5] "Characteristics of Spent Fuel, High Level Waste, and Other Radioactive Wastes Which May Require Long-Term Isolation," DOE/RW-0184, U.S. Department of Energy, December 1987.

[5.2.6] "Spent Nuclear Fuel Discharges from U.S. Reactors 1994," SR/CNEAF/96-01,

APPENDIX 5.F

DELETED

SUPPLEMENT 5.I

SHIELDING EVALUATION OF THE HI-STORM 100U SYSTEM

5.I.0 INTRODUCTION

This supplement is focused on providing a shielding evaluation of the HI-STORM 100U system pursuant to the guidelines in NUREG-1536. The evaluation presented herein supplements those evaluations of the HI-STORM overpacks contained in the main body of Chapter 5 of this FSAR, and information in the main body of Chapter 5 that remains applicable to the HI-STORM 100U is not repeated in this supplement. To aid the reader, the sections in this supplement are numbered in the same fashion as the corresponding sections in the main body of this chapter, i.e., Sections 5.I.1 through 5.I.6 correspond to Sections 5.1 through 5.6. Tables and figures in this supplement are labeled sequentially.

5.I.1 DISCUSSION AND RESULTS

The HI-STORM 100U system differs from the HI-STORM system evaluated in the main body of this chapter only in the use of a different storage overpack, the HI-STORM 100U vertical ventilated module (VVM). All MPCs and HI-TRAC transfer casks are identical between the systems. All calculations, results and conclusions regarding the HI-TRAC transfer cask presented in the main body of Chapter 5 are therefore directly applicable to the HI-STORM 100U system, and no further calculations for the HI-TRAC transfer cask are presented in this supplement.

The shielding design of the HI-STORM 100U VVM is similar to the overpack designs evaluated in the main body of this chapter, with gamma shielding provided by the concrete and the steel of the module, and neutron shielding provided by the module concrete. However, the VVM is mostly located below the surface of the surrounding soil. This results in additional shielding, and a significant reduction in the directly accessible surface for the VVM compared to the other overpacks. Dose rates from a HI-STORM 100U VVM at the site boundary are therefore significantly lower than, and bounded by, dose rates from the above ground HI-STORM systems evaluated in the main body of this chapter.

Shielding analyses were performed for the HI-STORM 100U with an MPC-32 loaded with intact design basis zircaloy clad fuel assemblies. As discussed in Section 5.1, three burnup and cooling time combinations are analyzed for the MPC-32, namely 45,000 MWD/MTU and 3 years, 60,000 MWD/MTU and 4 years, and 69,000 MWD/MTU and 5 years cooling time. These burnup and cooling time combinations represent all assemblies permitted to be loaded in any of the uniform or regionalized loading configurations in the MPC-32. All calculations for the HI-STORM 100 are performed for all three combinations, and the results corresponding to the highest total dose rate at each dose location are reported. Dose rates at some locations are more dominated by the contribution from the neutron source. In this case, the highest burnup will result in the highest dose rates. At other locations, dose rates are more dominated by the contribution from the photon source terms. In this case, the shortest cooling time will result in

Table 5.I.1

DOSE RATES ADJACENT TO AND 1 METER FROM THE HI-STORM 100U MODULE FOR NORMAL CONDITIONS
MPC-32 DESIGN BASIS ZIRCALOY CLAD FUEL AT REPRESENTATIVE BURNUP AND COOLING TIME

Dose Point† Location	Burnup and Cooling Time (MWD/MTU / Years)	**Fuel Gammas†† (mrem/hr)**	**^{60}Co Gammas (mrem/hr)**	**Neutrons (mrem/hr)**	**Totals (mrem/hr)**	**Totals with BPRAs (mrem/hr)**
Surface						
1	69,000 / 5	41.70	8.24	15.08	65.02	69.43
2	69,000 / 5	3.03	1.07	4.84	8.94	9.39
3	69,000 / 5	16.83	3.59	5.08	25.50	27.91
4	69,000 / 5	11.62	10.23	25.69	47.54	51.73
5	45,000 / 3	3.38	2.83	7.60E-02	6.29	7.49
6‡,	45,000 / 3	0.40	6.6E-02	1.85E-02	0.48	0.52
One Meter						
1	69,000 / 5	3.44	0.70	1.41	5.56	5.92
2	69,000 / 5	0.93	0.44	0.92	2.30	2.49
3	69,000 / 5	5.10	1.07	1.50	7.67	8.49
4	69,000 / 5	2.97	0.68	1.96	5.61	6.03

† Refer to Figure 5.I.1.
†† Gammas generated by neutron capture are included with fuel gammas.
‡ Calculated for an empty VVM surrounded by four loaded VVMs.

SUPPLEMENT 5.III

EVALUATION OF THE MPC-68M BASKET, AND THE 10x10F AND 10x10G ASSEMBLY CLASSES

5.III.0 DISCUSSION

The MPC-68M is a variation of the 68 cell BWR canister MPC-68 evaluated in the main part of this chapter, but with a basket design consisting of aluminum oxide and finely ground boron carbide dispersed in a metal matrix of pure aluminum. The boron carbide content is 10% (minimum) by weight. This results in a B-10 areal density that is slightly above that in the MPC-68. The relevant differences between the baskets are listed below, and then discussed in respect to its effect on the photon and neutron dose rates.

Differences between the MPC-68M compared to the MPC-68, in respect to the characteristics important for the dose calculations, are as follows:

- The MPC-68M has a slightly higher B-10 content
- The MPC-68M is lighter, since it consists of aluminum and boron carbide, but no steel
- In the enclosure shell, the MPC-68M is surrounded by aluminum basket shims

To evaluate the effect of these differences, studies in the main part of Chapter 5 regarding dose contributions from a regionalized loading scheme are utilized. These studies, described in Section 5.4, show that the inner region on an MPC-68 (32 assemblies = 47 % of the content) contributes about 27% of the neutron dose rate, but only about 2 % of the photon dose rate. This means that the self-shielding of the fuel and basket for neutron radiation is low, while for photon radiation it is very high. The low neutron self-shielding means that the neutron doses are not significantly affected by the reduced basket weight, since the majority of the neutron shielding function is provided by the overpack around the MPC. Also, for MPCs filled with water, there is a further reduction in neutron dose due to the increased absorption of thermal neutrons from the increased B-10 loading. The high self-shielding for photons means that only the outer basket panels are effective for gamma shielding. For the MPC-68M, the shielding in this area is enhanced due to the presence of the basket shims, and therefore comparable to the absorption in the steel basket walls. In summary, the effect of the design differences between MPC-68 and MPC-68M on dose rates is small.

Additionally, two BWR array classes designated 10x10F and 10x10G have been added as approved contents in the MPC-68M only. From a radiological perspective, the additional array classes are bounded by the design basis GE 7x7 source term calculations, since those design basis assemblies have higher initial uranium masses. In summary, no new analyses are necessary to qualify those additional array classes.

Therefore, the main body of this chapter remains fully applicable for the HI-STORM 100 System using an MPC-68M and the new assembly classes.

Shield Ring (if utilized) is installed and filled with water and the neutron shield jacket is filled with water[1] (if drained). The inflatable annulus seal is removed, and the annulus shield (if utilized) is installed. The Temporary Shield Ring provides additional personnel shielding around the top of the HI-TRAC during MPC closure operations. The annulus shield provides additional personnel shielding at the top of the annulus and also prevents small items from being dropped into the annulus. Dose rates are measured at the MPC lid to ensure that the dose rates are within expected values.

The MPC water level is lowered slightly, the MPC is vented, and the MPC lid is seal welded using the automated welding system (Box 8). Visual examinations are performed on the tack welds. Liquid penetrant (PT) examinations are performed on the root and final passes. An ultrasonic or multi-layer PT examination is performed on the MPC Lid-to-Shell weld to ensure that the weld is satisfactory. As an alternative to volumetric examination of the MPC lid-to-shell weld, a multi-layer PT is performed including one intermediate examination after approximately every three-eighth inch of weld depth. The MPC Lid-to-Shell weld is then pressure tested ~~followed by an additional liquid penetrant examination performed on the MPC Lid-to-Shell weld~~ to verify structural integrity. To calculate the helium backfill requirements for the MPC (if the backfill is based upon helium mass or volume measurements), the free volume inside the MPC must first be determined. This free volume may be determined by measuring the volume of water displaced or any other suitable means.

Depending upon the burn-up or decay heat load of the fuel to be loaded in the MPC, moisture is removed from the MPC using either a vacuum drying system or forced helium dehydration system. For MPCs without high burn-up fuel and with sufficiently low decay heat, the vacuum drying system may be connected to the MPC and used to remove all liquid water from the MPC in a stepped evacuation process (Box 9). A stepped evacuation process is used to preclude the formation of ice in the MPC and vacuum drying system lines. The internal pressure is reduced to below 3 torr and held for 30 minutes to ensure that all liquid water is removed.

For high-burn-up fuel or MPCs with high decay heat, or as an alternative for MPCs without high burn-up fuel and with lower decay heat, a forced helium dehydration system is utilized to remove residual moisture from the MPC. Gas is circulated through the MPC to evaporate and remove moisture. The residual moisture is condensed until no additional moisture remains in the MPC. The temperature of the gas exiting the system demoisturizer is maintained below 21°F for a minimum of 30 minutes to ensure that all liquid water is removed

Following MPC moisture removal, the MPC is backfilled with a predetermined amount of helium gas. If the MPC contains high burn-up fuel and MPC heat load greater than the threshold heat load setting in Table 4.5.4, then a Supplemental Cooling System (SCS) is connected to the HI-TRAC annulus prior to helium backfill and is used to circulate coolant to maintain fuel cladding temperatures below ISG-11 Rev. 3 limits (See Figure 2.C.1). The helium backfill ensures adequate heat transfer during storage, and provides an inert atmosphere for long-term fuel integrity. Cover plates are installed and seal welded over the MPC vent and drain ports with liquid penetrant examinations performed on the root and final passes (for multi-pass welds) (Box

1 Filled water jacket is relied in Section 4.5 thermal analysis of HI-TRAC in the dry and helium filled MPC condition.

10). The cover plate welds are then leak tested.

An option available on all MPCs is the addition of a second cover plate on the drain and vent ports. The outer cover plate is installed in a counterbored recess directly over the inner port cover. The outer port cover is welded with visual and liquid penetrant examinations performed on the root, final, and at least one intermediate weld pass.

The MPC closure ring is then placed on the MPC and dose rates are measured at the MPC lid to ensure that the dose rates are within expected values. The closure ring is aligned, tacked in place and seal welded providing redundant closure of the MPC confinement boundary closure welds. Tack welds are visually examined, and the root and final welds are inspected using the liquid penetrant examination technique to ensure weld integrity.

The annulus shield (if utilized) is removed and the remaining water in the annulus is drained. The Temporary Shield Ring (if utilized) is drained and removed. The MPC lid and accessible areas of the top of the MPC shell are smeared for removable contamination. HI-TRAC top lid[4] is installed and the bolts are torqued (Box 11). HI-TRAC surface dose rates are measured in accordance with the technical specifications. The MPC lift cleats are installed on the MPC lid. The MPC lift cleats are the primary lifting point on the MPC. MPC slings are installed between the MPC lift cleats and the lift yoke (Box 12).

If the HI-TRAC 125 is being used, the transfer lid is attached to the HI-TRAC as follows. The HI-TRAC is positioned above the transfer slide to prepare for bottom lid replacement. The transfer slide consists of an adjustable-height rolling carriage and a pair of channel tracks. The transfer slide supports the transfer step which is used to position the two lids at the same elevation and creates a tight seam between the two lids to eliminate radiation streaming. The overhead crane is shut down to prevent inadvertent operation. The transfer slide carriage is raised to support the pool lid while the bottom lid bolts are removed. The transfer slide then lowers the pool lid and replaces the pool lid with the transfer lid. The carriage is raised and the bottom lid bolts are replaced. The MPC lift cleats and slings support the MPC during the transfer operations. Following the transfer, the MPC slings are disconnected and HI-TRAC is positioned for MPC transfer into HI-STORM.

MPC transfer may be performed inside or outside the fuel building (Box 13). Similarly, HI-TRAC and HI-STORM may be transferred to the ISFSI in several different ways (Box 14 and 15). The empty HI-STORM overpack is inspected and positioned with the lid removed. Vent duct shield inserts[2] are installed in the HI-STORM exit vent ducts. The vent duct shield inserts prevent radiation streaming from the HI-STORM Overpack as the MPC is lowered past the exit vents. If the HI-TRAC 100D, 125D, or 100G is used, the mating device is positioned on top of the HI-STORM. The HI-TRAC is placed on top of HI-STORM. An alignment device (or mating device in the case of HI-TRAC 100D, 125D, and 100G) helps guide HI-TRAC during this operation[3]. The MPC may be lowered using the MPC downloader, the main crane hook or

2 Vent duct shield inserts are only used on the HI-STORM 100.

3 The alignment guide may be configured in many different ways to accommodate the specific sites. See Table 8.1.6.

4 Users with the optional HI-TRAC Lid Spacer shall modify steps in their procedures to

l. Continue to raise the HI-TRAC under the direction of the plant's radiological control personnel. Continue rinsing the surfaces with demineralized water. When the top of the HI-TRAC reaches the same elevation as the reservoir, close the Annulus Overpressure System reservoir valve (if used). See Figure 8.1.14.

m. Remove HI-TRAC from the spent fuel pool while spraying the surfaces with plant demineralized water.

ALARA Note:
Decontamination of HI-TRAC bottom should be performed using remote cleaning methods, covering or other methods to minimize personnel exposure. The bottom lid decontamination may be deferred to a convenient and practical time and location. Any initial decontamination should only be sufficient to preclude spread of contamination within the fuel building.

n. Decontaminate HI-TRAC bottom and HI-TRAC exterior surfaces including the pool lid bottom. Remove the bottom protective cover, if used.

o. If used, disconnect the Annulus Overpressure System from the HI-TRAC See Figure 8.1.14.

p. Set HI-TRAC in the designated cask preparation area.

Note:
If the transfer cask is expected to be operated in an environment below 32 °F, and a minimum heat load requirement was not applied to loading the MPC, the water jacket shall be filled with an ethylene glycol solution (25% ethylene glycol). Otherwise, the jacket shall be filled with demineralized water. Depending on weight limitations, the neutron shield jacket may remain filled (with pure water or 25% ethylene glycol solution, as required). Users shall evaluate the cask weights to ensure that cask trunnion, lifting devices and equipment load limitations are not exceeded.

q. If previously drained, fill the neutron shield jacket with plant demineralized water or an ethylene glycol solution (25% ethylene glycol) as necessary.

r. Disconnect the lifting slings or Lid Retention System (if used) from the MPC lid and disengage the lift yoke. Decontaminate and store these items in an approved storage location.

Warning:
MPC lid dose rates are measured to ensure that dose rates are within expected values. Dose rates exceeding the expected values could indicate that fuel assemblies not meeting the CoC may have been loaded.

s. Measure the dose rates at the MPC lid and verify that the combined gamma and neutron dose is below expected values.

t. Perform decontamination and a dose rate/contamination survey of HI-TRAC.

u. Prepare the MPC annulus for MPC lid welding as follows:

a. If performing a hydrostatic test, attach the drain line to the vent port and route the drain line to the spent fuel pool or the plant liquid radwaste system and connect the pressurized water supply to the drain port. If performing a pneumatic test, attach the pressure supply and vent line to the vent port and route the vent line to a suitable radwaste connection. See Figure 8.1.20 for the pressure test arrangement.

ALARA Warning:
Water flowing from the MPC may carry activated particles and fuel particles. Apply appropriate ALARA practices around the drain line.

b. If performing a hydrostatic test, fill the MPC with either spent fuel pool water or plant demineralized water until water is observed flowing out of the vent port drain hose. Refer to Tables 2.1.14 and 2.1.16 for boron concentration requirements.

c. Perform the pressure test of the MPC as follows:

1. Close the drain/vent valve and pressurize the MPC to minimum test pressure listed in Table 2.0.1 +5/-0 psig.

2. Close the supply valve and monitor the pressure for a minimum of 10 minutes. The pressure shall not drop below the minimum test pressure during the performance of the test.

3. Following the 10-minute hold period, visually examine the MPC lid-to-shell weld for leakage of water (hydrostatic test) or helium using a bubble test solution (pneumatic test). The acceptance criterion is no observable leakage.

d. Release the MPC internal pressure, disconnect the inlet line and drain line from the vent and drain port RVOAs leaving the vent and drain port caps open.

~~1. Repeat the liquid penetrant examination on the MPC lid final pass.~~

e. Repair any weld defects in accordance with the site's approved weld repair procedures. Re-perform the Ultrasonic (if necessary), PT, and pressure tests if weld repair is performed.

5. Drain the MPC as follows:

Caution:
This Caution block is required by the HI-STORM 100 CoC (CoC Appendix B, Section 3.4.10 and Appendix B-100U, Section 3.4.12) and may not be deleted without prior NRC approval via CoC amendment. To prevent the oxidation of the fuel the MPC interior shall be filled with helium or another suitable inert gas to avoid exposing the fuel to oxidizing agents while at elevated temperatures. Exposing fuel at elevated temperatures to oxidizing agents can lead to deleterious oxidation of the fuel.
Caution:
For MPCs above a threshold heat load (see Technical Specifications), vacuum drying is subject

Note:
ASME Boiler and Pressure Vessel Code [8.1.3], Section V, Article 6 provides the liquid penetrant inspection methods. The acceptance standards for liquid penetrant examination shall be in accordance with ASME Boiler and Pressure Vessel Code, Section III, Subsection NB, Article NB-5350 as specified on the Design Drawings. ASME Code, Section III, Subsection NB, Article NB-4450 provides acceptable requirements for weld repair. NDE personnel shall be qualified per the requirements of Section V of the Code or site-specific program.

d. Weld cover plate and perform NDE on the cover plate with approved procedures (See 9.1 and Table 2.2.15)

e. Repair any~~d~~ weld defects in accordance with the site's approved code weld repair procedures.

f. If using redundant port cover plates, install the redundant port cover plate, perform the multi-pass welds, and perform NDE on the redundant port cover plates with approved procedures (See 9.1 and Table 2.2.15). Repair any weld defects in accordance with the site's approved code weld repair procedures.

~~f.~~g. If not using redundant port cover plates, p~~P~~erform a helium leakage rate test on the cover plate welds. (See 9.1 and Table 2.2.15). Acceptance Criteria are defined in Technical Specification LCO 3.1.1.

g. Repair any weld defects in accordance with the site's approved code weld repair procedures.

h. Deleted.

i. Repeat for the drain port cover plate.

9. Perform a leakage test of the MPC vent and drain port cover plates as follows:

Note:
If the redundant port cover option is being implemented, Steps (a) through (g) are not performed.
Note:
The leakage detector may detect residual helium in the atmosphere from the helium injection process. If the leakage tests detect a leak, the area should be blown clear with compressed air or nitrogen and the location should be retested.
Note:
The following process provides a high concentration of helium gas in the cavity. Other methods that ensure a high concentration of helium gas are also acceptable.

a. If necessary, remove the cover plate set screws or plugs.

b. Flush the cavity with helium to remove the air and immediately install the set screws or plugs recessed below flush with the top of the cover plate.

c. Plug weld the recess above each set screw or plug to complete the penetration closure welding.

sample is performed to assess the condition of the fuel assembly cladding. A vent line is attached to the vent port and the MPC is vented to the fuel building ventilation system or spent fuel pool as determined by the site's radiation protection personnel. The MPC is filled with water (borated as required) at a controlled rate to avoid over pressurizing the MPC (Box 6) and the supplemental cooling system, if used, is terminated. The weld removal system then removes the MPC lid-to-shell weld. The weld removal system is removed with the MPC lid left in place (Box 7).

The top surfaces of the HI-TRAC and MPC are cleared of metal shavings. The inflatable annulus seal is installed and pressurized. The MPC lid is rigged to the lift yoke or lid retention system and the lift yoke is engaged to HI-TRAC lifting trunnions. If weight limitations require, the neutron shield jacket is drained of water. HI-TRAC is placed in the spent fuel pool and the MPC lid is removed (Boxes 8 and 9). All fuel assemblies are returned to the spent fuel storage racks and the MPC fuel cells are vacuumed to remove any assembly debris and crud (Box 10). HI-TRAC and MPC are returned to the designated preparation area (Box 11) where the MPC water is pumped back into the spent fuel pool or liquid radwaste facility. The annulus water is drained and the MPC and overpack are decontaminated (Box 12 and 13).

8.3.2 HI-STORM Recovery from Storage

Note:
The MPC transfer may be performed using the MPC downloader or the overhead crane.
Note:
The site-specific transport route conditions must satisfy the requirements of the technical specification.

1. Recover the MPC from HI-STORM as follows:

   a. If necessary, perform a transport route walkdown to ensure that the cask transport conditions are met.

   b. Transfer HI-STORM to the fuel building or site designated location for the MPC transfer.

   c. Position HI-STORM under the lifting device.

   d. Remove the HI-STORM lid nuts, washers and studs or lid closure bolts.

   e. Remove the HI-STORM lid lifting hole plugs and install the lid lifting sling. See Figure 8.1.27.

Note:
The specific sequence for vent screen, temperature element, and gamma shield cross plate removal may vary based on the mode(s) or transport.

   f. Remove the HI-STORM exit vent screens, temperature elements and gamma shield cross plates (if used). See Figure 8.1.34a.

Warning:
Unless the lift is single-failure proof (or equivalent safety factor) for the HI-STORM lid, the lid shall be kept less than 2 feet above the top surface of the overpack. This is performed to protect the MPC lid from a potential HI-STORM 100 lid drop.

g. Remove the HI-STORM lid. See Figure 8.1.27.

h. Install the alignment device (or mating device with pool lid for HI-TRAC 100D, 125D, and 100G) and vent duct shield inserts (HI-STORM 100 only). See Figure 8.1.30.

i. Deleted.

j. Remove the MPC lift cleat hole plugs and install the MPC lift cleats and MPC slings to the MPC lid. See Table 8.1.5 for torque requirements.

k. If necessary, install the top lid on HI-TRAC. See Figure 8.1.9 for rigging. See Table 8.1.5 for torque requirements.

l. Deleted.

2. If necessary, configure HI-TRAC with the transfer lid (Not required for HI-TRAC 100D, 125D, and 100G):

ALARA Warning:
The bottom lid replacement as described below may only be performed on an empty (i.e., no MPC) HI-TRAC.

m. Position HI-TRAC vertically adjacent to the transfer lid. See Section 8.1.2.

n. Remove the bottom lid bolts and plates and store them temporarily.

o. Raise the empty HI-TRAC and position it on top of the transfer lid.

p. Inspect the pool lid bolts for general condition. Replace worn or damaged bolts with new bolts.

q. Install the transfer lid bolts. See Table 8.1.5 for torque requirements.

3. At the site's discretion, perform a HI-TRAC receipt inspection and cleanliness inspection in accordance with a site-specific inspection checklist.

Note:
If the HI-TRAC is expected to be operated in an environment below 32 °F, and a minimum heat load requirement was not applied to loading the MPC, the water jacket shall be filled with an ethylene glycol solution (25% ethylene glycol). Otherwise, the jacket shall be filled with demineralized water.

4. If previously drained, fill the neutron shield jacket with plant demineralized water or an ethylene glycol solution (25% ethylene glycol) as necessary. Ensure that the fill and drain plugs are installed.

Table 8.I.1
HI-STORM 100U VVM INSPECTION CHECKLIST

Note:
This checklist provides the basis for establishing a site-specific inspection checklist for the HI-STORM 100U VVM. Specific findings shall be brought to the attention of the project management for assessment, evaluation and potential corrective action prior to use.

HI-STORM 100U VVM Lid:

1. The painted surfaces shall be inspected for corrosion and chipped, cracked or blistered paint.
2. All lid surfaces shall be relatively free of dents, scratches, gouges or other damage.
3. The lid shall be inspected for the presence or availability of studs, nuts, and hole plugs.
4. Lid lifting points shall be inspected for dirt, debris, and general condition.
5. Vent openings (if used) shall be free from obstructions.
6. Vent screens (if used) shall be available, intact, and free of holes and tears.
7. Temperature monitoring elements, if used, shall be inspected for availability, function, calibration and provisions for mounting to the VVM outlet air passage.

HI-STORM 100U VVM Main Body:

1. Cooling passages shall be free from obstructions.
2. The interior cavity shall be free of debris, litter, tools, and equipment.
3. Painted surfaces shall be inspected for corrosion, and chipped, cracked or blistered paint.

13. A documentation package shall be prepared and maintained during fabrication of each HI-STORM 100 System to include detailed records and evidence that the required inspections and tests have been performed. The completed documentation package shall be reviewed to verify that the HI-STORM 100 System or component has been properly fabricated and inspected in accordance with the design and Code construction requirements. The documentation package shall include, but not be limited to:

- Completed Shop Weld Records
- Inspection Records
- Nonconformance Reports
- Material Test Reports
- NDE Reports
- Dimensional Inspection Report

9.1.1.1 MPC Lid-to-Shell Weld Volumetric Inspection

1. The MPC lid-to-shell (LTS) weld shall be volumetrically or multi-layer liquid penetrant (PT) examined following completion of welding. If volumetric examination is used, the ultrasonic testing (UT) method shall be employed. Ultrasonic techniques (including, as appropriate, Time-of-Flight Diffraction, ~~Focussed~~Focused Phased Array, and conventional pulse-echo) shall be supplemented, as necessary, to ensure substantially complete coverage of the examination volume.

2. If volumetric examination is used, then a PT examination of the root and final pass of the LTS weld shall also be performed and unacceptable indications shall be documented, repaired and re-examined.

3. If volumetric examination is not used, a multi-layer PT examination shall be employed. The multi-layer PT must, at a minimum, include the root and final weld layers and one intermediate PT after each approximately 3/8 inch weld depth has been completed. The 3/8 inch weld depth corresponds to the maximum allowable flaw size determined in Holtec Position Paper DS-213 [9.1.6].

4. The overall minimum thickness of the LTS weld has been increased by 0.125 inch over the size credited in the structural analyses, to provide additional structural capacity. A 0.625-inch J-groove weld was assumed in structural analyses in Chapter 3.

5. For either UT or PT, the maximum undetectable flaw size must be demonstrated to be less than the critical flaw size. The critical flaw size must be determined in accordance with ASME Section XI methods. The critical flaw size shall not cause the primary stress limits of NB-3000 to be exceeded. The inspection results, including relevant findings (indications) shall be made a permanent part of

restriction provided the combined error due to calibration and readability does not exceed 1% of the test pressure. The hydrostatic test pressure shall be maintained for ten minutes. During this time period, the pressure gage shall not fall below the applicable minimum test pressure. At the end of ten minutes, and while the pressure is being maintained at the minimum pressure, weld joints shall be visually examined for leakage. If a leak is discovered, the cavity shall be emptied and an examination to determine the cause of the leakage shall be made. Repairs and retest shall be performed until the hydrostatic test criteria are met.

After completion of the hydrostatic testing, the water jacket exterior surfaces shall be visually examined for cracking or deformation. Evidence of cracking or deformation shall be cause for rejection, or repair and retest, as applicable. Liquid penetrant (PT) or magnetic particle (MT) examination of accessible welds shall be performed in accordance with ASME Code, Section V, Articles 6 and 7, respectively, with acceptance criteria per ASME Code, Section III, Subsection NF, Articles NF-5350 and NF-5340, respectively. Unacceptable areas shall require repair and re-examination per the applicable ASME Code. The HI-TRAC water jacket hydrostatic test shall be repeated until all examinations are found to be acceptable.

If a hydrostatic retest is required and fails, a nonconformance report shall be issued and a root cause evaluation and appropriate corrective actions taken before further repairs and retests are performed.

Test results shall be documented. The documentation shall become part of the final quality documentation package.

9.1.2.2.2 MPC Confinement Boundary

Pressure testing (hydrostatic or pneumatic) of the MPC confinement boundary shall be performed in accordance with the requirements of the ASME Code Section III, Subsection NB, Article NB-6000 and applicable sub-articles, when field welding of the MPC lid-to-shell weld is completed. If hydrostatic testing is used, the MPC shall be pressure tested to 125% of design pressure. If pneumatic testing is used, the MPC shall be pressure tested to 120% of design pressure. The MPC vent and drain ports will be used for pressurizing the MPC cavity. The loading procedures in FSAR Chapter 8 define the test equipment arrangement. The calibrated test pressure gage installed on the MPC confinement boundary shall have an upper limit of approximately twice that of the test pressure. Digital type pressure gages may be used without conforming to the upper limit restriction, provided that the combined error due to calibration and readability does not exceed 1% of the test pressure. Following completion of the required hold period at the test pressure, the surface of the MPC lid-to-shell weld shall be visually re-examined for leakage. ~~by liquid penetrant examination in accordance with ASME Code, Section III, Subsection NB, Article NB-5350 acceptance criteria~~. Any evidence of leakage, cracking or deformation shall be cause for rejection, or repair and retesting, as applicable. The performance and sequence of the test is described in FSAR Section 8.1 (loading procedures).

If a leak is discovered, the test pressure shall be reduced, the MPC cavity water level lowered, if applicable, the MPC cavity vented, and the weld shall be examined to determine the cause of the

leakage and/or cracking. Repairs to the weld shall be performed in accordance with written and approved procedures prepared in accordance with the ASME Code, Section III, Article NB-4450.

The MPC confinement boundary pressure test shall be repeated until all required examinations are found to be acceptable. Test results shall be documented and maintained as part of the loaded MPC quality documentation package.

9.1.2.3 Materials Testing

The majority of materials used in the HI-TRAC transfer cask and a portion of the material in the HI-STORM overpack are ferritic steels. ASME Code, Section II and Section III require that certain materials be tested in order to assure that these materials are not subject to brittle fracture failures.

Materials of the HI-TRAC transfer cask and HI-STORM overpack, as required, shall be Charpy V-notch tested in accordance with ASME Section IIA and/or ASME Section III, Subsection NF, Articles NF-2300, and NF-2430. The materials to be tested include the components identified in Table 3.1.18 and applicable weld materials. Table 3.1.18 provides the test temperatures and test acceptance criteria to be used when performing the material testing specified above.

The concrete utilized in the construction of the HI-STORM overpack shall be mixed, poured, and tested as described in FSAR Appendix 1.D in accordance with written and approved procedures. Testing shall verify the composition, compressive strength, and density meet design requirements.

Concrete testing shall be performed for each lot of concrete. Concrete testing shall comply with Appendix 1.D.

Test results shall be documented and become part of the final quality documentation package.

9.1.3 Leakage Testing

Leakage testing shall be performed in accordance with the requirements of ANSI N14.5 [9.1.5]. Testing shall be performed in accordance with written and approved procedures.

Helium leakage testing of the MPC base metals (shell, baseplate, and MPC lid) and MPC shell to baseplate and shell to shell welds is performed on the unloaded MPC. The acceptance criterion is “leak-tight” as defined in ANSI N14.5.

The helium leakage test of the vent and drain port cover plate welds shall be performed using a helium mass spectrometer leak detector (MSLD). If a leakage rate exceeding the acceptance criterion is detected, then the area of leakage shall be determined and the area repaired per ASME Code Section III, Subsection NB, Article NB-4450 requirements. Re-testing shall be performed until the leakage rate acceptance criteria is met.

An option available on all MPCs is the addition of a second cover plate on the drain and vent ports. The outer cover plate is installed in a counterbored recess directly over the inner port cover. The outer port cover is welded using a minimum of three weld passes that bridge the weld joint. Visual and liquid penetrant examinations shall be performed on the root, final and at least one intermediate weld pass. Helium leak testing is not required when the redundant port cover design is used

Leakage testing of the field welded MPC lid-to-shell weld and closure ring welds are not required.

Leak testing results for the MPC shall be documented and shall become part of the quality record documentation package.

Leakage testing of the vent and drain port cover plates, when required, shall be performed after welding of the cover plates and subsequent NDE. The description and procedures for these field leakage tests are provided in FSAR Section 8.1 and the acceptance criteria are defined in the Technical Specifications in Appendix A to CoC 72-1014.

9.1.4 Component Tests

9.1.4.1 Valves, Rupture Discs, and Fluid Transport Devices

There are no fluid transport devices or rupture discs associated with the HI-STORM 100 System. The only valve-like components in the HI-STORM 100 System are the specially designed caps installed in the MPC lid for the drain and vent ports. These caps are recessed inside the MPC lid and covered by the fully-welded vent and drain port cover plates. No credit is taken for the caps' ability to confine helium or radioactivity. After completion of drying and backfill operations, the drain and vent port cover plates are welded in place on the MPC lid and are liquid penetrant examined and leakage tested to verify the MPC confinement boundary.

There are two pressure relief valves installed in the upper ledge surface of the HI-TRAC transfer cask water jacket. These pressure relief valves are provided for venting of the neutron shield jacket fluid under hypothetical fire accident conditions in which the design pressure of the water jacket may be exceeded. The pressure relief valves shall relieve at 60 psig and 65 psig. The HI-TRAC 100G pressure relief valves shall relieve at 50 psig and 60 psig.

9.1.4.2 Seals and Gaskets

There are no confinement seals or gaskets included in the HI-STORM 100 System.

9.1.5 Shielding Integrity

NOTE

Section 9.1.5.3 below (including Subsections 9.1.5.3.1 through 9.1.5.3.3) is incorporated into the HI-STORM 100 CoC by reference (CoC Appendix B, Section 3.2.8) and may not be deleted or altered in any way without prior NRC approval via CoC amendment. The text of this section is, therefore, shown in bold type to distinguish it from other text.

9.1.5.3 Neutron Absorber Tests

Each plate of neutron absorber shall be visually inspected for damage such as scratches, cracks, burrs, peeled cladding, foreign material embedded in the surfaces, voids, delamination, and surface finish, as applicable.

9.1.5.3.1 Boral (75% Credit)

After manufacturing, a statistical sample of each lot of neutron absorber shall be tested using wet chemistry and/or neutron attenuation testing to verify a minimum ^{10}B content (areal density) in samples taken from the ends of the panel. The minimum ^{10}B loading of the neutron absorber~~l~~ panels for each MPC model is provided in Table 2.1.15. Any panel in which ^{10}B loading is less than the minimum allowed shall be rejected. Testing shall be performed using written and approved procedures. Results shall be documented and become part of the cask quality records documentation package.

9.1.5.3.2 METAMIC® (90% Credit)

NUREG/CR-5661 identifies the main reason for a penalty in the neutron absorber B-10 density as the potential of neutron streaming due to non-uniformities in the neutron absorber, and recommends comprehensive acceptance tests to verify the presence and uniformity of the neutron absorber for credits more than 75%. Since a 90% credit is taken for METAMIC®, the following criteria must be satisfied:

- The boron carbide powder used in the manufacturing of METAMIC® must have small particle sizes to preclude neutron streaming
- The ^{10}B areal density must comply with the limits of Table 2.1.15.
- The B_4C powder must be uniformly dispersed locally, i.e. must not show any particle agglomeration. This precludes neutron streaming.
- The B_4C powder must be uniformly dispersed macroscopically, i.e. must have a consistent concentration throughout the entire neutron absorber panel.
- The maximum B_4C content in METAMIC® shall be less than or equal to 33.0 weight percent.

To ensure that the above requirements are met the following tests shall be performed:

Table 9.1.1 (continued)
MPC INSPECTION AND TEST ACCEPTANCE CRITERIA

Function	Fabrication	Pre-operation	Maintenance and Operations
Structural	a) Assembly and welding of MPC components shall be performed per ASME Code Section IX and III, Subsections NB and NG, as applicable. b) Materials analysis (steel, neutron absorber, etc.), shall be performed and records shall be kept in a manner commensurate with "important to safety" classifications.	a) None.	a) An ultrasonic (UT) examination or multi-layer liquid penetrant (PT) examination of the MPC lid-to-shell weld shall be performed per ASME Section V, Article 5 (or ASME Section V, Article 2). Acceptance criteria for the examination are defined in Subsection 9.1.1.1 and in the Design Drawings. b) ASME Code NB-6000 pressure test shall be performed after MPC closure welding. Acceptance criteria are defined in the Code.
Leak Tests	a) Helium leakage testing of the MPC shell and MPC shell to baseplate welds is performed on the unloaded MPC. b) Helium leakage testing of the MPC base metals (shell, baseplate, lid) is performed.	a) None.	a) Helium leak rate testing shall be performed on the vent and drain port cover plate to MPC lid field welds~~–~~ and the cover plate base metals. If the redundant port cover design is used on the vent and drain ports, ~~H~~helium leak testing is not required. See Technical Specification Bases in Chapter 12 for guidance on acceptance criteria.

Table 9.1.4 (continued)
HI-STORM 100 NDE REQUIREMENTS

MPC			
Weld Location	**NDE Requirement**	**Applicable Code**	**Acceptance Criteria (Applicable Code)**
Lid-to-shell	PT (root and final pass) and multi-layer PT (if UT is not performed). PT (surface following pressure test) UT (if multi-layer PT is not performed)	ASME Section V, Article 6 (PT) ASME Section V, Article 5 (UT)	PT: ASME Section III, Subsection NB, Article NB-5350 UT: ASME Section III, Subsection NB, Article NB-5332
Closure ring-to-shell	PT (final pass)	ASME Section V, Article 6 (PT)	PT: ASME Section III, Subsection NB, Article NB-5350
Closure ring-to-lid	PT (final pass)	ASME Section V, Article 6 (PT)	PT: ASME Section III, Subsection NB, Article NB-5350
Closure ring radial welds	PT (final pass)	ASME Section V, Article 6 (PT)	PT: ASME Section III, Subsection NB, Article NB-5350
Port cover plates-to-lid (Single port cover plate option)	PT (root and final pass)	ASME Section V, Article 6 (PT)	PT: ASME Section III, Subsection NB, Article NB-5350
Port cover plates-to-lid (Redundant Port Cover Plate Option)	Inner Plate: PT (final pass) Outer Plate: PT (root, final and at least one intermediate pass)	ASME Section V, Article 6 (PT)	PT: ASME Section III, Subsection NB, Article NB-5350, In addition, the PT if the Inner Plate shall produce a clean, "White" result to indicate a lack of porosity
Lift lug and lift lug baseplate	PT (surface)	ASME Section V, Article 6 (PT)	PT: ASME Section III, Subsection NG, Article NG-5350
Vent and drain port cover plate plug welds	PT (surface)	ASME Section V, Article 6 (PT)	PT: ASME Section III, Subsection NG, Article NG-5350

Table 9.2.1

HI-STORM SYSTEM MAINTENANCE PROGRAM SCHEDULE

Task	Frequency
Overpack cavity visual inspection	Prior to fuel loading
Overpack bolt visual inspection	Prior to installation during each use
Overpack external surface (accessible) visual examination	Annually, during storage operation
Overpack vent screen visual inspection for damage, holes, etc.	Monthly
HI-STORM 100 Shielding Effectiveness Test	In accordance with Technical Specifications after initial fuel loading
HI-TRAC cavity visual inspection	Prior to each handling campaign
HI-TRAC lifting trunnion and pocket trunnion (bottom trunnion for HI-TRAC 100G) recess visual inspection	Prior to each handling campaign
Testing to verify continuing compliance of HI-TRAC Lifting Trunnions	In accordance with ANSI N14.6-1993
HI-TRAC pressure relief ~~valve~~ device calibration	Annually†
HI-TRAC internal and external visual inspection for compliance to design drawings	Annually†
HI-TRAC water jacket water level visual examination	During each handling campaign in accordance with licensee approved operations procedures
Overpack visual inspection of identification markings	Annually
Overpack Air Temperature Monitoring System	Per licensee's QA program and manufacturer's recommendations

† Or prior to next HI-TRAC use if the period the HI-TRAC is out of use exceeds one year.

Appendix 9.A Aging Management Program

In accordance with the renewed HI-STORM 100 license, sites must implement an aging management program. An aging management assessment of the components of the HI-STORM 100 system was performed. This review identified inspection and monitoring activities necessary to provide reasonable assurance that system components within the scope of license renewal continue to perform their intended functions consistent with the current licensing basis for the renewed operating period. This section describes those aging management programs.

9.A.1 Aging Management Programs

The following apply to Amendments 0 through ~~15~~16.

9.A.1.1 MPC AMP

The MPC AMP uses inspections to look for visual evidence of discontinuities and imperfects, such as localized corrosion, including pitting corrosion and stress corrosion cracking of the canister welds and heat affected zones. The full program is described in Table 9.A.1-1.

9.A.1.2 Overpack AMP

The Overpack AMP uses inspections to look for indication of deterioration that might affect the ability of the overpack to perform its important to safety function. The full program is described in Table 9.A.1-2.

9.A.1.3 Transfer Cask AMP

The Transfer Cask AMP utilizes inspections to ensure that the equipment maintains its intended function through the extended storage period. The full program is described in Table 9.A.1-3.

9.A.1.4 High Burnup Fuel Assembly AMP

The high burnup fuel assembly AMP only applies to systems that store high burnup fuel. The AMP relies on the EPRI and DOE research project on high burnup fuel. The full program is described in Table 9.A.1-4.

9.A.1.5 100U Concrete AMP

The 100U Concrete AMP only applies to sites that utilize the HI-STORM 100U system. The AMP uses condition monitoring to manage aging effects above and below ground. The full program is described in Table 9.A.1-5.

9.A.1.6 Time Limited Aging Analyses (TLAA)

.During the review of the FSAR for license renewal, two time limited aging analyses (TLAAs) were identified that were updated to support the renewed license life. Full details of the analyses are contained in Reference [9.A.1].

- Neutron Absorber Depletion – as described in Section 3.4.12, the calculation has been evaluated for the full 60 year license and demonstrates there is more than enough boron to account for any depletion so no aging management program is needed to manage the absorber aging.
- MPC Fatigue Evaluation – A review of MPC fatigue indicated that repeated lifting cycles could change the fatigue life. The renewal application [9.A.1] indicates that the number of lifting cycles allowable is in excess of anything that would be expected for handling of the MPC throughout the extended storage period.

9.A.1.7 100 UVH AMP

The Version UVH overpack shares in many inspection criterions applicable to the standard HI-STORM 100 overpack, with certain key differences. Namely, inspections of the internal cavity of the overpack are rendered unnecessary by isolating the internal cavity from the external, ambient environment through the use of a seal. The full program is described in Table 9.A.1-6

Table 9.A.1-6 Version UVH AMP

Element	Description
1. Scope of Program	This program covers the subcomponents of the HI-STORM 100 UVH Overpack identified in Table 3.3-1, from [9.A.2], which require the Overpack AMP to ensure their continued operation into the extended storage period.
2. Preventative Actions	This AMP uses condition monitoring to manage aging effects. The design of the system is intended to minimize aging effects, but this AMP focuses on condition monitoring and detecting any evidence of degradation. No new preventative actions are included in this AMP.
3. Parameters Monitored / Inspected	The inspections shall be site-specific and performed at sites which utilize HI-STORM 100 Version UVH systems. Visual inspections cover all of the normally accessible external surfaces of the overpack. Normally accessible portions of the overpack surfaces are visually examined for indication of any surface deterioration. Degradation could affect the ability of the overpack to provide support or confinement to the MPCs, to provide radiation shielding, or to provide missile shielding. The items inspected should cover (but are not limited to) those listed below: • Lid studs and nuts or lid closure bolts, as accessible • The accessible overpack body and lid painted surfaces • Overpack lid seal, as accessible
4. Detection of Aging Effects	The overpack AMP is a visual inspection in order to detect any aging effects. The visual survey performed on all overpacks annually will identify the source of any staining or corrosion-related activity and the degree of damage. The visual survey is performed in accordance with site implementing procedures and may be satisfied by continuing the overpack external surface (accessible) visual examination in the HI-STORM FSAR Table 9.2.1
5. Monitoring and Trending	The inspections and surveillances described for the external subcomponents of the overpack are performed periodically in order to identify areas of degradation. The results will be evaluated by a qualified individual, and areas of degradation not meeting established criteria will be entered into the corrective action program for resolution or more detailed evaluation. The results will be compared against previous inspections in order to monitor and trend the progression of the aging effects over time.
6. Acceptance Criteria	The external metallic surfaces of the overpack are coated, and significant corrosion is not anticipated. The overpack lid shall be free of dents, scratches, gouges or other damage. Gouges and depressions that

	are less than 25% of the thickness, less than 20% of the largest lineal dimension of the part long, less than ¼ inch width, with a minimum separation between gouges of 5% of the largest lineal dimension of the part are considered acceptable without further evaluation. Gouges of this size were considered acceptable without further evaluation during fabrication and continue to be acceptable during storage. Any indication of general or localized corrosion (pitting and crevice) on the steel surfaces, or degradation of coatings shall be identified for trending purposes. If indications requiring additional evaluation are found, the issue would be entered into the site's corrective action program and an engineering evaluation would be performed to determine the extent and impact of the degradation on the component's ability to perform its intended function. These evaluations may include additional visual, surface, or volumetric non-destructive examination methods to determine the loss of material. If the degradation does not compromise the overpack's ability to maintain its function, then no further evaluation is required, but the degradation should be tracked for future inspections. The overpack seal shall be free of signs of corrosion, scratches, gouges, or any other signs of degradation. Presence of signs of degradation on the seal will require further evaluation. If the degradation does not compromise the seal's ability to maintain its function, then no further evaluation is required, but the degradation should be tracked for future inspections.
7. Corrective Actions	The corrective actions performed based on any detected aging effects are in accordance with the site's Quality Assurance (QA) program. The QA Program ensures that corrective actions are completed. The QA program and corrective action program will determine any necessary actions, identify any changes to the existing AMP, and determine if the condition is reportable, as applicable. The corrective actions will also identify any actions needed to be taken for increased scope or frequency of inspections as necessary, based on any detected aging effects. The corrective action program will also identify any dispositions needed from Holtec.
8. Confirmation	The confirmation process will be commensurate with the site QA

Process	program. The QA program ensures that inspections, evaluations, and corrective actions are completed.
9. Administrative Controls	The site QA program and implementing procedures for this AMP will address instrument calibration and maintenance, inspector requirements, record retention requirements, and document control. This AMP will be updated, as necessary, based on the toll gate assessments described in Section 4 of [9.A.2]. Inspection results will be documented and made available for NRC inspection as necessary.
10. Operating Experience	Previous Operating Experience Section 3.1.2 of [9.A.2] summarizes HI-STORM 100 operating experience, which indicates very minimal corrosion detected to date, mostly limited to small rust spots and coating degradation. That operating experience has been incorporated into the guidance on inspections and acceptance criteria contained in this AMP. Future Operating Experience As the overpack inspections are performed, sites will upload information into the INPO AMID database to be shared with other users.

9.A.3 References

[9.A.1] HI-2188877, “HI-STORM 100 License Renewal Application,” Latest Revision

[9.A.2] HI-2210316, “Aging Management Evaluation for the HI-STORM 100 Version UVH Dry Storage System," Latest Revision

b. Canister material mechanical properties for structural integrity of the confinement boundary.

c. Canister and basket material thermal properties and dimensions for heat transfer control.

d. Canister and basket material composition and dimensions for dose rate control.

12.2.9 HI-STORM Overpack/VVM

a HI-STORM overpack/VVM material mechanical properties and dimensions for structural integrity to provide protection of the MPC and shielding of the spent nuclear fuel assemblies during loading, unloading and handling operations, as applicable.

b. HI-STORM overpack/VVM material thermal properties and dimensions for heat transfer control.

c. HI-STORM overpack/VVM material composition and dimensions for dose rate control.

12.2.10 Verifying Compliance with Fuel Assembly Decay Heat, Burnup, and Cooling Time Limits

The examples below execute the approach and equations described in Section 2.1.9.1 for determining allowable decay heat per storage location, burnup, and cooling time for the approved cask contents.

Example 1

~~In this example, a demonstration of the use of burnup versus cooling time tables for regionalized fuel loading is provided.~~ In this example it will be assumed that the MPC-32 is being loaded with array/class 16x16A fuel in a regionalized loading pattern and will be stored in an aboveground HI-STORM system.

Step 1: Pick a value of X between 0.5 and 3. For this example X will be 2.8.

Step 2: Calculate $q_{Region2}$ as described in Section 2.1.9.1.2:

$$q_{Region2} = (2 \times 34)/[(1 + (2.8)^{0.2075}) \times ((12 \times 2.8) + 20)] = 0.5668 \text{ kW}^{\dagger}$$

Step 3: Calculate $q_{Region1}$ as described in Section 2.1.9.1.2:

$$q_{Region1} = X \times q_{Region2} = 2.8 \times 0.5668 = 1.5871 \text{ kW}$$

† Results are arbitrarily rounded to four decimal places.

Step 4: Develop a burnup versus cooling time table. ~~Since this table is enrichment dependent, it is permitted and advisable to create multiple tables for different enrichments. In this example, two enrichments will be used: 3.1 and 4.185.~~ Tables 12.2.1 ~~and 12.2.2~~ shows the burnup versus cooling time table~~s calculated for these enrichments~~ specified for Region 1 and Region 2 as described in Section 2.1.9.1.3. It should be noted that based on the shielding evaluations in Chapter 5, a maximum allowable burnup is independent of fuel enrichment.

Table 12.2.3 provides three hypothetical fuel assemblies in the 16x16A array/class that will be evaluated for acceptability for loading in the MPC-32 example above. The decay heat values in Table 12.2.3 are calculated by the user. The other information is taken from the fuel assembly and reactor operating records.

All three fuel assemblies are acceptable for loading based on the total decay heat of the contents and allowable burnups in Table 12.2.1.

Fuel Assembly Number 1: ~~is not acceptable for storage because its enrichment is lower than that used to determine the allowable burnups in Table 12.2.1 and 12.1.2. The solution is to develop another table using an enrichment of 3.0 wt.% ^{235}U or less to determine this fuel assembly's suitability for loading in this MPC-32.~~ Comparing the total decay heat of the contents† (fuel (1.01 kW) plus non-fuel hardware (0.5 kW)) to the calculated limits indicates that the fuel assembly, including the non-fuel hardware, is acceptable for storage in Region 1.

Fuel Assembly Number 2 is ~~not~~ also acceptable for storage only in Region 1 due to decay heat limitations~~loading unless a unique maximum allowable burnup for a cooling time of 3.3 years is calculated by linear interpolation between the values in Table 12.2.1 for 3 years and 4 years of cooling. Linear interpolation yields a maximum burnup of 36,497 MWD/MTU (rounded down from 36,497.2), making Fuel Assembly Number 2 acceptable for loading only in Region 1 due to decay heat limitations~~.

Fuel Assembly Number 3: ~~is acceptable for loading based on the higher allowable burnups in Table 12.2.2, which were calculated using a higher minimum enrichment that those in Table 12.2.1, which is still below the actual initial enrichment of Fuel Assembly Number 3.~~ Due to its relatively low total decay heat of 0.5 kW (fuel: 0.4, non-fuel hardware: 0.1), Fuel Assembly Number 3 may be stored in Region 1 or Region 2.

Example 2

~~In this example, each fuel assembly in Table 12.2.3 will be evaluated to determine whether it may be stored in the same hypothetical MPC-32 in a regionalized storage pattern in an aboveground system. Assuming the same value 'X', the same maximum fuel storage location decay heats are calculated. The equation in Section 2.1.9.1.3 is executed for each fuel assembly~~

---

† The assumption is made that the non-fuel hardware meets burnup and cooling time limits in Table 2.1.25.

~~using its exact initial enrichment to determine its maximum allowable burnup. Linear interpolation is used to further refine the maximum allowable burnup value between cooling times, if necessary.~~

~~Fuel Assembly Number 1: The calculated allowable burnup for 3.0 wt.% ^{235}U and a decay heat value of 1.5871 kW ($q_{region1}$) is 44,905 MWD/MTU at 4 years minimum cooling. Its decay heat is too high for loading in Region 2. Comparing the fuel assembly burnup and total decay heat of the contents‡ (fuel (1.01 kW) plus non-fuel hardware (0.5 kW)) to the calculated limits indicates that the fuel assembly, including the non-fuel hardware, is acceptable for storage in Region 1.~~

~~Fuel Assembly Number 2: The calculated allowable burnup for 3.2 wt.% ^{235}U and a decay heat value of 1.5871 kW ($q_{region1}$) is 32,989 MWD/MTU for 3 years cooling and 45,382 MWD/MTU for 4 years cooling. Linearly interpolating between these values for a cooling time of 3.3 years yields a maximum allowable burnup of 36,706 MWD/MTU and, therefore, the assembly is acceptable for storage in Region 1. This fuel assembly's decay heat is also too high for loading in Region 2.~~

~~Fuel Assembly Number 3: The calculated allowable maximum burnup for 4.3 wt.% ^{235}U and a decay heat value of 0.5668 ($q_{Region2}$) is 41,693 MWD/MTU for 18 years cooling. Comparing the fuel assembly burnup and total decay heat of the contents (fuel plus non-fuel hardware) against the calculated limits indicates that the fuel assembly and non-fuel hardware are acceptable for storage. Therefore, the assembly is acceptable for storage in Region 2. This fuel assembly would also be acceptable for loading in Region 1 (this conclusion is inferred, but not demonstrated).~~Deleted.

Example 3

In this example, a demonstration of the use of burnup versus cooling time table~~s~~ for uniform fuel loading is provided. In this example it will be assumed that the MPC-68 is being loaded with array/class 9x9A fuel and will be stored in an aboveground HI-STORM system.

Step 1: CoC TS Appendix B Table 2.4-1 provides the heat load limit on each storage location (q_{max}). For MPC-68 this is 0.5 kW.

Step 2: Develop a burnup versus cooling time table. Table 12.2.4 shows the burnup versus cooling time table specified for uniform loading as described in Section 2.1.9.1.3. It should be noted that based on the shielding evaluations in Chapter 5, a maximum allowable burnup is independent of fuel enrichment.~~Since this table is enrichment dependent, it is permitted and advisable to create multiple tables for different enrichments if the fuel being loaded varies significantly in initial enrichment. It is conservative to choose the lowest value of initial enrichment to generate the table.~~

~~‡ The assumption is made that the non-fuel hardware meets burnup and cooling time limits in Table 2.1.25.~~

~~In this example, two enrichments will be used: 3.0 and 4.5. Tables 12.2.4 and 12.2.5 show the burnup versus cooling time tables calculated for these enrichments for the respective q_{max}.~~

Table 12.2.6 provides three hypothetical fuel assemblies in the 9x9A array/class that will be evaluated for acceptability for loading in the MPC-68 example above. The decay heat values in Table 12.2.6 would be calculated by the user. The other information would be taken from the fuel assembly and reactor operating records.

All of the assemblies meet the per cell heat load limit of 0.5 kW and allowable burnups in Table 12.2.4.

~~Fuel Assembly Number 1 is acceptable for storage because its enrichment is lower than that used to determine the allowable burnups in Table 12.2.4 and the burnup is lower than that allowed for the cooling time of the assembly.~~

~~Fuel Assembly Number 2 is not acceptable for loading based on the current tables. The fuel assembly burnup is greater than allowed by Table 12.2.4, even with linear interpolation (30978 MWD/MTU). Fuel Assembly Number 2 may be acceptable for loading if a new table is created specifically for an initial enrichment of 3.5 wt% and the allowable burnup is greater than 35250.~~

~~Fuel Assembly Number 3 is acceptable for loading based on the allowable burnups in Table 12.2.5.~~

12.2.11 Verifying Compliance with Total MPC Heat Load

Some operational steps and/or use of particular equipment are required if Q_{CoC} is above a certain value, e.g. 28.74 kW in the MPC-32. These include supplemental cooling, forced helium dehydration, helium backfill pressure, and surveillance requirements for LCO 3.1.2. These examples demonstrate the logic behind the decisions for these operational steps. Time to boil limits and vacuum drying are also considered in these examples.

Example 1:

Table 12.2.7 contains a proposed heat load pattern for loading a MPC-68 (non-duplex) into an aboveground HI-STORM 100 System. The table provides the decay heat of each storage location. It is assumed that each of these assemblies meets the burnup and~~,~~ cooling time ~~and enrichment~~ criteria for loading as described in the previous examples in Section 12.2.10.

General observations on this loading plan:

1. The heat loads in all cells meet the CoC limits for Uniform Loading, i.e. all cells are ≤ 0.50 kW (See Table 2.1.26).
2. The MPC is loaded preferentially for ALARA considerations, i.e. the assemblies with the lower heat loads are in the peripheral cells.
3. The aggregate MPC heat load, as defined in Section 2.1.9.1.2 as the simple summation of the assemblies in the MPC, is 18.917 kW.

4. The maximum heat load in any cell is 0.460 kW.
5. Q_{CoC}, as defined in Section 2.1.9.1.2 equation c is 31.280 kW.

Recommendations based on the general observations without further site-specific analysis:

1. Vacuum drying: The MPC *cannot* be dried using vacuum drying because the Q_{CoC} heat load is greater than 30 kW (See FSAR Table 4.5.1).
2. Forced Helium Dehydration: The MPC should be dried using forced helium dehydration since the Q_{CoC} heat load exceeds the vacuum drying threshold heat loads (See FSAR Table 4.5.1).
3. Helium Backfill Pressure Range: The MPC should be backfilled to the higher pressure range given in the TS because the Q_{CoC} heat load exceeds the heat load in Table 3-2 of the CoC Appendix A and FSAR Table 1.2.2.
4. Supplemental Cooling System: A supplemental cooling system would be required for on-site transport of High Burnup Fuel in the HI-TRAC after the MPC is dried, backfilled and sealed because the Q_{CoC} heat load exceeds the 90% design basis threshold heat load in FSAR Table 2.1.26 and per cell limits in CoC Appendix B Table 2.4-1.
5. Heat Removal Surveillance (LCO 3.1.2): The user has 24 hours to clear blockage on the system containing this MPC since the Q_{CoC} heat load (assuming the pattern is at the time of inspection) exceeds the 28.152 kW (=0.414 kW*68) threshold heat load in LCO 3.1.2.
6. Time to boil determination: The user can calculate the time to boil limit based on the aggregate MPC heat load of 18.917 kW since this is a bulk adiabatic heat up calculation strictly based on the aggregate heat in the MPC.
7. Air mass flow rate test requirements per Condition 9 of the CoC: The user can determine if this test needs to be performed based on the aggregate MPC heat load of 18.917 kW since the air flow on the outside of the MPC is strictly based on the aggregate heat in the MPC.

Example 2

Table 12.2.8 contains a proposed heat load pattern for loading a MPC-32 (non-duplex). The table provides the decay heat of each storage location. It is assumed that each of these assemblies meets the burnup and~~,~~ cooling time ~~and enrichment~~ criteria for loading as described in the previous examples in Section 12.2.10.

General observations on this loading plan:

1. The heat loads in all cells meet the CoC limits for Uniform Loading, i.e. all cells are ≤ 1.062 kW (See Table 2.1.26).
2. The MPC is loaded preferentially for ALARA considerations, i.e. the assemblies with the lower heat loads are in the peripheral cells.
3. The aggregate MPC heat load, as defined in Section 2.1.9.1.2 as the simple

summation of the assemblies in the MPC, is 17.471 kW.

4. The maximum heat load in any cell is 0.826 kW.
5. Q_{CoC}, as defined in Section 2.1.9.1.2 equation c is 26.432 kW.

Recommendations based on the general observations without further site-specific analysis:

1. Vacuum drying: The MPC can be dried using vacuum drying since the Q_{CoC} heat load is bounded by the threshold heat load Q2 in FSAR Table 4.5.1. The vacuum drying is time limited as Q_{CoC} exceeds threshold heat load Q1 in FSAR Table 4.5.1.
2. Forced Helium Dehydration: The MPC can be dried using forced helium dehydration but it is not required.
3. Helium Backfill Pressure Range: The MPC may be backfilled to either pressure range given in the TS because the Q_{CoC} heat load is bounded by the heat load limits in Table 3-2 of CoC Appendix A and FSAR Table 1.2.2.
4. Supplemental Cooling System: Since the maximum cell heat load is less than 90% of the design basis heat load per cell limit in FSAR Table 2.1.30, supplemental cooling is not required for on-site transport in the HI-TRAC if the higher helium backfill range in FSAR Table 1.2.2 is used. However, the maximum cell heat load is higher than 90% of the design basis heat load per cell limit in FSAR Table 2.1.31, so supplemental cooling would be required if the MPC contains High Burnup Fuel and is backfilled to the lower helium backfill range in FSAR Table 1.2.2.
5. Heat Removal Surveillance (LCO 3.1.2): The user has 64 hours to clear blockage on the system containing this MPC since the Q_{CoC} heat load (assuming the pattern is at the time of inspection) is bounded by the 28.74 kW threshold heat load in LCO 3.1.2.
6. Time to boil determination: The user can calculate the time to boil limit based on the aggregate MPC heat load of 17.471 kW since this is a bulk adiabatic heat up calculation strictly based on the aggregate heat in the MPC.
7. Air mass flow rate test requirements per Condition 9 of the CoC: The user can determine if this test needs to be performed based on the aggregate MPC heat load of 17.471 kW since the air flow on the outside of the MPC is strictly based on the aggregate heat in the MPC.

Example 3

Table 12.2.9 contains a proposed heat load pattern for loading a MPC-32 (non-duplex). The table provides the decay heat of each storage location. It is assumed that each of these assemblies meets the burnup and~~,~~ cooling time ~~and enrichment~~ criteria for loading as described in the previous examples in Section 12.2.10.

General observations on this loading plan:

1. The heat loads do not meet the CoC limits for Uniform Loading, i.e. some cells are ≥ 1.0625 kW (See Table 2.1.26).
2. The X value that most closely meets this pattern (See Table 2.1.30) is 1.5 which

Table 12.2.1

EXAMPLE BURNUP VERSUS COOLING TIME LIMITS FOR REGIONALIZED LOADING
(MPC-32, Array/Class 16x16A, X = 2.8~~, and Enrichment = 3.1 wt.% ^{235}U~~)
($q_{Region\ 1}$ = 1.5871 kW, $q_{Region\ 2}$ = 0.5668 kW)

MINIMUM COOLING TIME (years)	MAXIMUM ALLOWABLE BURNUP IN REGION 1 (MWD/MTU)	MAXIMUM ALLOWABLE BURNUP IN REGION 2 (MWD/MTU)
≥1.0	5,000	5,000
≥1.4	10,000	10,000
≥1.8	20,000	20,000
≥2.0	25,000	25,000
≥2.2	30,000	30,000
≥2.4	35,000	35,000
≥2.6	40,000	40,000
≥3	45,000~~32791~~	45,000~~10896~~
≥4	60,000~~45145~~	60,000~~17370~~
≥5	68,200~~53769~~	68,200~~22697~~
~~≥6~~	~~59699~~	~~26615~~
~~≥7~~	~~63971~~	~~29386~~
~~≥8~~	~~67343~~	~~31437~~
~~≥9~~	~~68200~~	~~33000~~
~~≥10~~	~~68200~~	~~34271~~
~~≥11~~	~~68200~~	~~35384~~
~~≥12~~	~~68200~~	~~36322~~
~~≥13~~	~~68200~~	~~37189~~
~~≥14~~	~~68200~~	~~37980~~
~~≥15~~	~~68200~~	~~38773~~
~~≥16~~	~~68200~~	~~39512~~
~~≥17~~	~~68200~~	~~40234~~
~~≥18~~	~~68200~~	~~40908~~
~~≥19~~	~~68200~~	~~41620~~
~~≥20~~	~~68200~~	~~42324~~

Table 12.2.2

~~EXAMPLE BURNUP VERSUS COOLING TIME LIMITS FOR REGIONALIZED LOADING~~Deleted

~~(MPC-32, Array/Class 16x16A, X = 2.8, and Enrichment =4.185 wt.% ^{235}U)~~

~~($q_{Region\ 1}$ = 1.5871 kW, $q_{Region\ 2}$ = 0.5668 kW)~~

~~MINIMUM COOLING TIME (years)~~	~~MAXIMUM ALLOWABLE BURNUP IN REGION 1 (MWD/MTU)~~	~~MAXIMUM ALLOWABLE BURNUP IN REGION 2 (MWD/MTU)~~
~~≥3~~	~~34797~~	~~11101~~
~~≥4~~	~~47590~~	~~17870~~
~~≥5~~	~~56438~~	~~23272~~
~~≥6~~	~~62533~~	~~27157~~
~~≥7~~	~~66963~~	~~29907~~
~~≥8~~	~~68200~~	~~31935~~
~~≥9~~	~~68200~~	~~33510~~
~~≥10~~	~~68200~~	~~34785~~
~~≥11~~	~~68200~~	~~35927~~
~~≥12~~	~~68200~~	~~36894~~
~~≥13~~	~~68200~~	~~37790~~
~~≥14~~	~~68200~~	~~38593~~
~~≥15~~	~~68200~~	~~39419~~
~~≥16~~	~~68200~~	~~40191~~
~~≥17~~	~~68200~~	~~40937~~
~~≥18~~	~~68200~~	~~41643~~
~~≥19~~	~~68200~~	~~42363~~
~~≥20~~	~~68200~~	~~43094~~

Table 12.2.4

EXAMPLE BURNUP VERSUS COOLING TIME LIMITS FOR ~~REGIONALIZED~~ UNIFORM LOADING
(MPC-68, Array/Class 9x9A~~, and Enrichment = 3.0 wt.% ^{235}U~~)
(q_{max} = 0.5 kW)

MINIMUM COOLING TIME (years)	**MAXIMUM ALLOWABLE BURNUP (MWD/MTU)**
≥1.0	10,000
≥1.2	15,000
≥1.4	20,000
≥2.0	25,000
≥2.2	30,000
≥2.4	35,000
≥2.6	40,000
≥3	50,000~~27739~~
≥4	62,000~~38536~~
≥5	65,000~~46268~~
≥6	65,000~~51583~~
~~≥7~~	~~55424~~
~~≥8~~	~~58303~~
~~≥9~~	~~60733~~
~~≥10~~	~~62798~~
~~≥11~~	~~64609~~
~~≥12~~	~~66331~~
~~≥13~~	~~68005~~
~~≥14~~	~~68200~~
~~≥15~~	~~68200~~
~~≥16~~	~~68200~~
~~≥17~~	~~68200~~
~~≥18~~	~~68200~~
~~≥19~~	~~68200~~
~~≥20~~	~~68200~~

Table 12.2.5

Deleted~~EXAMPLE BURNUP VERSUS COOLING TIME LIMITS FOR REGIONALIZED LOADING~~
~~(MPC-68, Array/Class 9x9A, and Enrichment =4.5 wt.% ^{235}U)~~
~~(q_{max} = 0.5 kW)~~

~~MINIMUM COOLING TIME (years)~~	~~MAXIMUM ALLOWABLE BURNUP (MWD/MTU)~~
~~≥3~~	~~30017~~
~~≥4~~	~~41399~~
~~≥5~~	~~49359~~
~~≥6~~	~~54839~~
~~≥7~~	~~58856~~
~~≥8~~	~~61932~~
~~≥9~~	~~64534~~
~~≥10~~	~~66802~~
~~≥11~~	~~68200~~
~~≥12~~	~~68200~~
~~≥13~~	~~68200~~
~~≥14~~	~~68200~~
~~≥15~~	~~68200~~
~~≥16~~	~~68200~~
~~≥17~~	~~68200~~
~~≥18~~	~~68200~~
~~≥19~~	~~68200~~
~~≥20~~	~~68200~~

BASES TABLE OF CONTENTS

BASES

SURVEILLANCE REQUIREMENTS

SR 3.1.1.1, SR 3.1.1.2 , and SR 3.1.1.3 (continued)

Appendix A to the CoC (regionalized) or Table 3-4 of Appendix A to the CoC (uniform), then the lower helium backfill pressure range in Table 3-2 item (i) can be used. The higher backfill pressure range in Table 3-2 item (ii) must be used if the cask heat load is greater than the value in Table 3-2 and the storage cell heat load is greater than the value in either Table 3-3 or Table 3-4. Note that the higher backfill pressure range in Table 3-2 item (ii) is just a subset of the wider range in item (i), and therefore can always be used as an option. The storage cell heat load limits specified in Table 3-3 and Table 3-4 for MPC-68/68F/68FF are also applicable to the MPC-68M, consistent with the analyses in the FSAR.

Meeting the helium leak rate limit ensures there is adequate helium in the MPC for long term storage and that there is no credible effluent dose from the cask.

MPCs that utilize the redundant port cover design exhibit increased confinement boundary reliability. Each port cover plate is subjected to NDE to ensure the absence of porosity in the material and is welded to the MPC lid in the same manner as in the non-redundant design. Each cover plate weld is subjected to similar NDE acceptance criteria, where successful NDE will verify the associated weld's integrity to maintain the MPC confinement boundary. As such, this surveillance does not need to be performed for MPCs that utilize the redundant port cover design.

All of these surveillances must be successfully performed once, prior to TRANSPORT OPERATIONS to ensure that the conditions are established for SFSC storage which preserve the analysis basis supporting the cask design.

REFERENCES

1. FSAR Sections 1.2, 4.4, 4.5, 7.2, 7.3 and 8.1
2. Interim Staff Guidance Document 11
3. Interim Staff Guidance Document 18
4. Deleted

B 5.0 Administrative Controls and Programs (LCO) APPLICABILITY
B 5.7 Radiation Protection Program

BASES	
B5.7.1	5.7.1 requires that the licensee appropriately includes provisions in their radiation protection program to account for dry storage of the system from loading through unloading. These provisions should also include the requirements included in Section 5.7 of the CoC.
B5.7.2	5.7.2 includes the requirements of 10CFR72.212(b)(2)(i)(c) for a documented evaluation that the dose limits of 10CFR72.104(a) are met. This evaluation should utilize the site-specific ISFSI layout, the planned number of casks, and the cask contents to demonstrate compliance with 10CFR72.104
B5.7.3	In accordance with 5.7.3, licensees should use the analysis performed in 5.7.2 to establish individual cask surface dose rate limits for the HI-TRAC TRANSFER CASK and the HI-STORM OVERPACK, in accordance with the measurement locations specified in 5.7.8. At the top of the OVERPACK, the top of the TRANSFER CASK, the side of the OVERPACK, the side of the TRANSFER CASK, and the inlet and outlet ducts on the OVERPACK (if applicable). If measured dose rates exceed these limits, it could be an indication of a loading error that may require corrective actions These calculated limits are used in comparison with the measured values in 5.7.8.
B5.7.4	5.7.4 contains additional dose rate limits for a loaded OVERPACK and TRANSFER CASK. These dose rate limits are set at a value above the maximum expected dose rates at the locations described in 5.7.8, from a system loaded with design basis fuel. The measured dose rate limit for the side of the TRANSFER CASK is 4000 mrem/hr (gamma + neutron). If measured dose rates exceed these limits, it could be an indication of a design or loading error that may require corrective actions. Section 5.1 of this FSAR contains additional discussions on the selection of the location and dose rate limits.
B5.7.5	5.7.5 provides the requirement that the licensee measure dose rates at the locations outlined in 5.7.8 and compare them to the lower of the two limits established in Section 5.7.3 or 5.7.4. This ensures that the most conservative limit is used.
B5.7.6	5.7.6 establishes corrective actions that shall be taken in the event of measured dose rates that exceed the lower of the two limits in Section 5.7.3 or 5.7.4. These corrective actions include verifying that contents were loaded correctly, performing analyses to ensure 10CFR72.104 dose limits are met, and determining the cause of the higher dose rate.

BASES	
B5.7.7	5.7.7 states that any evaluation under 5.7.6 that shows that 10CFR72.104 dose rate limits will not be met will prevent the MPC from being installed in the OVERPACK or it will be removed from the OVERPACK. This control ensures that the site continues to meet all regulatory requirements.
B 5.7.8	5.7.8 establishes locations for surface dose rate measurements. Compliance with 10CFR72.104 dose limits are confirmed with a comparison between these measured dose rates and the dose limits of the system set by calculation and maximum limits in 5.7.3 and 5.7.4 as described in 5.7.5. The measurement locations specified in 5.7.8 ensure the measured dose rates are compared with the analysis described in 5.7.2 at the same geometric location. Comparing the calculated dose rates at the same location as the measured dose rates provides assurance that the calculated dose (from 5.7.2) bound the actual doses at the site boundary, and therefore assures compliance with 10CFR72.104(a). Even though comparison of dose rates can occur across any location, the locations chosen in 5.7.8 were based on positions where higher dose rates are expected. Higher dose rates provide better measurements to protect against measurement inaccuracy and the additional actions of 5.7.6 and 5.7.7 for compliance to 10CFR72.104.

CHAPTER 1.IV; GENERAL DESCRIPTION: HI-STORM 100 SYSTEM WITH VERSION UVH OVERPACK

1.IV.0 General Information:

This supplement adds the Unventilated Version of the HI-STORM 100 overpack to the HI-STORM 100 Canister Storage system (hereafter called the "Storage System"). The overpack model is referred to as HI-STORM 100 Version UVH (the annex UVH is an abbreviation of **U**n-**V**entilated and H stands for **H**igh density concrete) or simply as "Version UVH." The presently certified overpack, transfer cask and MPC models are unaffected.

Essential features of the HI-STORM 100 Version UVH overpack are the absence of any ventilation feature openings and its use of High-Density Concrete serving as the principal shielding material. This supplement contains the necessary information and analyses to support the amendment to the certificate-of-compliance issued to the HI-STORM 100 Canister Storage system in docket # 72-1014 to serve as a spent nuclear fuel (SNF) dry storage cask under the provisions of 10 CFR 72 [1.0.1][1]. This supplement, prepared pursuant to 10 CFR 72.230, describes the basis for NRC approval and CoC amendment on the HI-STORM FW System under 10 CFR 72, Subpart L to safely store spent nuclear fuel (SNF) at an Independent Spent Fuel Storage Installation (ISFSI) under the general license authorized under 10 CFR 72, Subpart K.

The purpose of this chapter is to provide a general description of the design features and storage capabilities of the storage system consisting of the Version UVH overpack and the MPCs certified for storage in the HI-STORM 100 UVH system. This supplement introduces no new MPC or transfer cask; the only new equipment introduced is the unventilated overpack which is illustrated in the Licensing drawing package in Section 1.IV.5. This supplement is also suitable for incorporation into a site-specific Safety Analysis Report, which may be submitted by an applicant for a site-specific 10 CFR 72 license to store SNF at an ISFSI or a facility that is similar in objective and scope.

Each individual chapter that requires additional safety analysis to qualify the addition of the new overpack model also has its own supplement. Specifically, this supplement to the HI-STORM 100 FSAR is limited to the safety analysis of the HI-STORM 100 UVH overpack wherein the overpack's inlet and outlet air passages have been removed resulting in a complete cessation of ventilation in the space between the cask cavity and the stored multi-purpose canister (MPC) during the system's operation. This Supplement, like others, in some cases introduces improved safety analysis methods and better articulated acceptance criteria that provide a more robust bases or comprehensive treatment of the physical problem. Upon regulatory acceptance, such updated analysis techniques, where applicable, should be treated as preferred methods of analysis for all editions of this FSAR and the corresponding CoCs.

[1] Reference to a section, table, Figure or Reference without a Roman Numeral in it means it is in the main report.

An MPC (containing either PWR or BWR fuel) is placed inside the HI-STORM 100 Version UVH overpack for extended storage. The overpack provides shielding and environmental protection to the MPC. Figure 1.IV.0.1 shows a cut-away view of the Storage system.

Supplement IV is comprised of a number of chapters where safety-relevant information on the HI-STORM 100 Version UVH System is needed. There are, however, several chapters that are not affected by Version UVH and are therefore omitted. The unaffected chapters are listed in Table 1.IV.0.1 along with the rationale for their omission.

Because of the extensive nexus between the SSCs introduced in this Supplement and those previously documented in this FSAR, even the chapters that require fresh safety evaluation material have sections within them that are not affected. Those sections are identified at the beginning of each chapter and the rationale for their omission is given. For this chapter, Table 1.IV.0.2 lists the sections that do not require any change and are therefore not repeated.

All chapters in this supplement are identified as n.IV, where n is the chapter number in the main report which it supplements. Likewise, sections within a chapter are denoted by n.IV.m, where m is the section number in the main chapter to which it applies. Thus, n.IV.m.p represents the sequential sub-section p within section n.IV.m.

All tables and figures within each chapter are numbered sequentially. Thus, Table n.IV.1.1 represents the first table in Section n.IV.1.

Thus, the presence of IV in the reference to a section, table, reference or figure clearly identifies it to belong to Supplement IV.

All tables and figures called out in a Section can be found at the end of that Section.

Table 1.IV.0.1; HI-STORM 100 FSAR Chapters Unaffected by the Inclusion of Version UVH		
Chapter number	**Title**	**Reason for omission**
6	Criticality Evaluation	No new MPC and no new or different fuel is introduced in this supplement; therefore, there is no change in the criticality safety of the storage system
7	Confinement Evaluation	There is no change in the MPC confinement system. Therefore, the assertion made in Chapter 7 with regard to the leak tightness of the Confinement system apply.
10	Radiation Protection	The radiation protection attributes of the Storage system are improved in the unventilated Storage system because the elimination of the inlet and outlet air passages eliminates associated streaming of radiation during both the MPC loading operations and on-the-pad storage. Further the high density concrete in the UVH increases shielding performance. Therefore, the safety conclusions reached in Chapter 10 are applicable in an even greater measure.
13	Quality Assurance	The quality assurance program remains unchanged.

Table 1.IV.0.2; Sections in the main report of Chapter 1 of the FSAR that Remain Applicable to the Safety Evaluation in Supplement IV and are therefore Omitted from this Supplement		
Section number	**Title**	**Reason for omission**
1.IV.3	Identification of Agents and subcontractors	The information in Section 1.3 does not require any correction

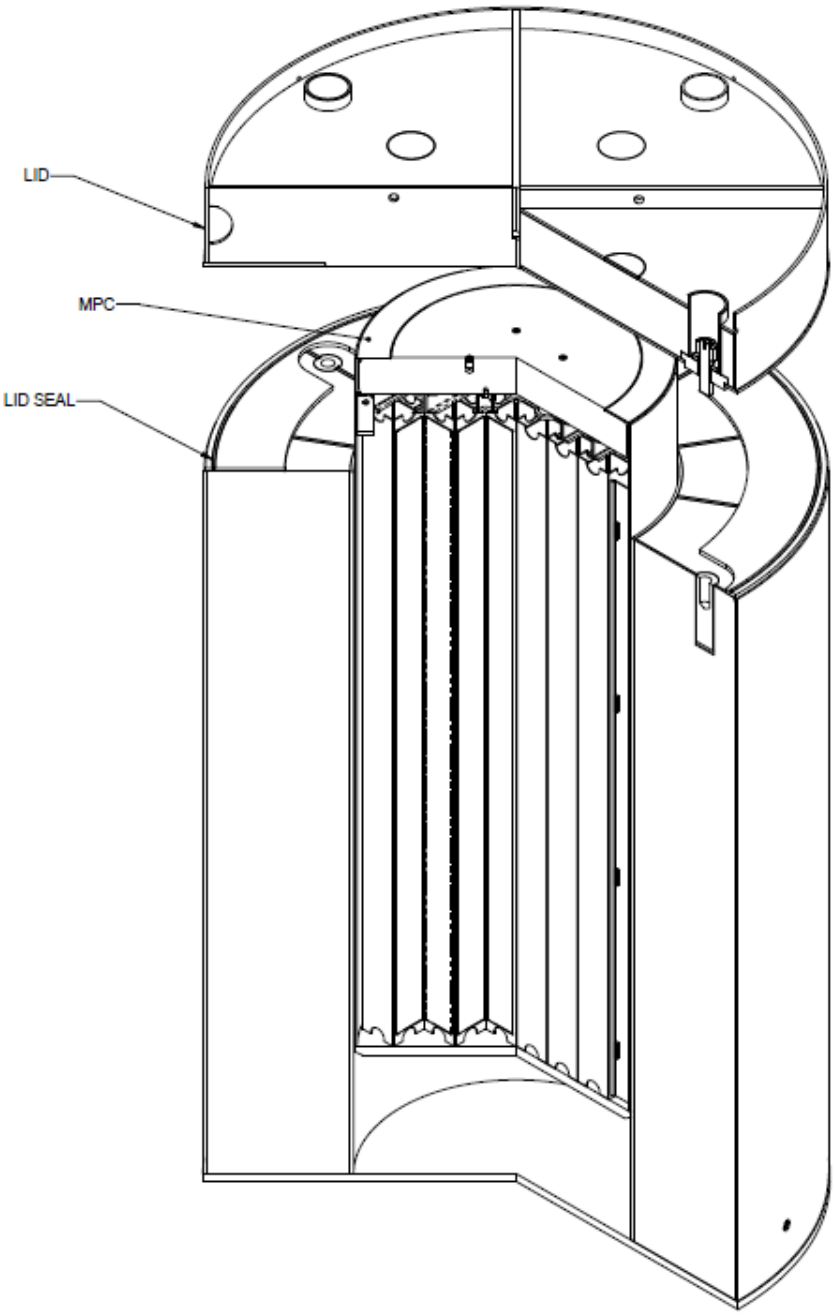

Figure 1.IV.0.1: HI-STORM 100 Version UVH Overpack in cut-away View

1.IV.1 Introduction to the Storage System

This supplement adds HI-STORM 100 Version UVH overpack model to the HI-STORM 100 system. The other components, namely the MPCs and the HI-TRAC transfer casks remain unchanged from the versions previously qualified and certified in this FSAR.

Because the Storage system does not rely on ventilation action, its heat rejection capacity is rather modest, governed by the natural convection and radiation from the external surfaces of the overpack. To quantify the heat removal rate, a quiescent condition (no wind) is assumed in the thermal analysis summarized in Chapter 4.IV.

Version UVH is engineered to provide a controlled environment within the overpack internal cavity, thus protecting the Canister from stress corrosion while also serving as a low-dose MPC storage system.

In all physical respects, the Version UVH storage system is essentially identical to its ventilated counterpart. Thus, like other ventilated HI-STORM 100 overpack models, the Version UVH overpack can be staged in a free standing configuration on a sheltered or unsheltered pad. Other key characteristics of the Storage system that it shares with other HI-STORM 100 systems are:

- Because the storage cask is not used to load fuel in the pool, the storage system does not run the risk of being infected with the pool's contamination.
- The MPC, designed and qualified to be *leak-tight*, is a compact "*waste package*" which can be readily retrieved and transported off-site in a suitably certified transport cask.
- The MPC confinement boundary, deemed to be leak-tight pursuant to ISG-18, provides an incomparably greater protection against leakage than a gasketed metal cask with a bare basket.
- The principle system components listed in Table 1.IV.1.1 are designated Important-to-safety (ITS). The ISFSI pad is NITS.

Table 1.IV.1.1: Principle System Components QA Designation	
Principle System Components	**QA Designation**
HI-STORM 100 UVH Overpack	ITS
HI-TRAC Transfer Casks	ITS
MPCs	ITS

1.IV.2 General Description

1.IV.2.1 System Characteristics

The components of the UVH Storage system are listed in Table 1.IV.1.1. The description of the UVH Overpack is provided in this section. The HI-TRACs and MPCs are described in Chapter 1 and other adopted supplements to this FSAR, and these descriptions remain applicable to this supplement. The overpack, illustrated in the licensing drawing in Section 1.IV.5, is sized to store the designated reference MPCs described below.

1.IV.2.1.1 MPCs:

No new MPC designs are proposed in this supplement and there are no modifications to existing designs for this supplement. The MPC models qualified for the HI STORM 100 Version UVH System were previously certified or are subject to certification in Supplements 1.II and 1.III of this FSAR.

1.IV.2.1.2.1 Version UVH Overpack:

This supplement adds the HI-STORM 100 Version UVH ("Version UVH") overpack to the HI-STORM 100 Canister storage system. Like all other overpack models previously evaluated in this FSAR, Version UVH is a dual buttressed steel shell structure with the inter-shell space filled with plain concrete. Because of its steel external body, Version UVH can be arrayed in a freestanding configuration. Likewise, the storage system can be deployed in a sheltered (inside a ventilated building) or unsheltered state.

The key distinguishing feature of Version UVH is that it has no inlet or outlet vents. Thus, there is no ventilation flow of air around the MPC. Rather the cask is designed to reject the fuel's decay heat from the external surface of the Canister without the benefit of ventilation flow. Rejection of heat from the external surface of the Canister to the external surface of the overpack is facilitated by a combination of conduction and radiation modes of heat transmission. The diametrical clearance between the overpack and the MPC is minimal which, under the design basis heat load, is further reduced allowing for conduction based heat transfer to assist in heat dissipation. Radiation from the hot MPC surfaces to the cask's inner surfaces also plays an active heat dissipation role. Additionally, radial ribs in the overpack body and lid assist in heat dissipation to cask external surfaces. Finally, the shielding concrete used in Version UVH is of high density rich in hematite class of aggregate which ensures a high thermal conductance across its mass. Heat rejection from the overpack to the ambient environment like all other HI-STORM overpack models, occurs through natural convection from the cask's exposed surfaces.

The Closure Lid for Version UVH is also a steel structural weldment with high density, high conductivity concrete installed inside its structure to provide protection against sky shine. The Closure Lid is installed on the cask body by a set of equidistant anchor bolts with a small clearance and an interposed flat concentric gasket providing a barrier against the intrusion of air in the overpack's annulus space and thus protecting the MPC from the deleterious effect of airborne species that may induce stress corrosion cracking (SCC) in stainless steel. Precluding the incidence

of SCC in the MPC shell during extended period of storage by creating a still air environment around it is a principal benefit of Version UVH. The weight of the Closure Lid helps the sealing action of the gasket. In the event the air in the overpack annulus were to pressurize, the weight of the lid is counteracted allowing the air to escape. Thus the overpack has a built-in protection against overpressure.

In addition to providing a barrier against ingress of aggressive species in the space around the MPC, Version UVH also accrues several salutary benefits, such as:

- Absence of vent openings eliminates a source of radiation to the environment emitted from the Canister.

- The overpack is rendered much more rugged against mechanical projectiles in absence of vent openings. The intermediate and penetrant Design Basis Missiles (see Table 2.IV.2.1) cease to be a safety concern.

- The Version UVH overpack, made of steel and devoid of any vents, emulates a metal cask in respect of critical functions under accident conditions such as the Design Basis Fire. However, thanks to its larger footprint and greater mass, it is a far superior in respect of shielding capacity and seismic stability in comparison to any peer metal cask.

- The aging related deterioration of the paint on the cask's internal surface is substantially retarded because of the hot and dry air environment in contact with it.

- Periodic inspection of the vent openings and associated LCOs in the CoC become unnecessary, eliminating this source of radiation dose to the site staff.

The HI-STORM 100 Version UVH overpack is qualified to store all MPCs model types listed in Table 2.IV.1.1 with permissible heat loads as described in Section 2.IV.1. Table 1.IV.2.2 provides essential design data required for the safety analysis of the Version UVH overpack cask in the subsequent chapters.

1.IV.2.1.2.2 Transfer Cask

HI-TRAC transfer casks qualified for other HI STORM 100 models may be used with Version UVH. No new transfer cask design is proposed in this supplement and there are no modifications to existing designs.

1.IV.2.1.3 Shielding Materials:

There is no change in the shielding materials used in the HI-STORM 100 UVH system from the shielding materials described for other models of the HI-STORM 100 System. Table 1.IV.2.1 contains additional information.

1.IV.2.1.3.1 Neutron Absorber Materials:

There is no change in the neutron absorber materials employed in the HI-STORM 100 UVH system from the materials used in other models of the HI-STORM 100 System (Table 1.IV.2.1).

1.IV.2.1.4 Lifting Devices:

There is no change in the specification for the Lifting Devices described for the HI-STORM 100 System. Table 1.IV.2.1 contains additional information.

1.IV.2.1.5 Design Life

There is no change in the design life of the HI-STORM 100 UVH system from the design life specified in the main body of this FSAR. Table 1.IV.2.1 contains additional information.

1.IV.2.2 Operational Characteristics:

The operational features from other HI-STORM 100 models remain fully applicable except that, as stated in Chapter 9.IV, before installing the Closure Lid on the Storage overpack, a gasket to inhibit exchange of the gas inside and outside of the cask is placed on the interface between the cask body and the closure lid. See Table 1.IV.2 for additional information.

1.IV.2.2.3 Identification of Subjects for Safety and Reliability Analysis

1.IV.2.2.3.1 Criticality Prevention

There is no change from the previously approved MPCs, and their Fuel Baskets, proposed in this Supplement. Therefore, there is no change in the criticality safety characteristics of the Storage system.

1.IV.2.2.3.2 Chemical Safety

There are no chemical safety hazards associated with operations of the Storage system. See Table 1.IV.2.1 for additional information.

1.IV.2.2.3.3 Operation Shutdown Modes

The Storage system is totally passive and consequently, operation shutdown modes are unnecessary. See Table 1.IV.2.1 for additional information.

1.IV. 2.2.3.4 Instrumentation

The MPCs qualified for the HI-STORM 100 UVH system, which are seal welded, non-destructively examined, and pressure tested, confines the radioactive contents. The Storage system is completely passive with appropriate margins of safety; therefore, it is not necessary to deploy any instrumentation to monitor the cask in the storage mode. At the option of the user, temperature elements may be utilized to monitor the surface temperature of the cask. See Table 1.IV.2.1 for additional information.

1.IV.2.2.3.5 Maintenance Technique

Because of its passive nature, the Storage system requires minimal maintenance over its lifetime. No special maintenance program is required. Typical maintenance consists of protecting the overpack from external corrosion and periodic replacement of the Closure Lid gasket (see Section 9.IV.2.2).

1.IV.2.3 Cask Contents:

The fuel types and MPCs authorized for storage in the Version UVH Storage System is described in Section 2.IV.1. Additionally, restrictions on heat load apply, and are described in Section 2.IV.1.1.

Table 1.IV.2.1
Index of Topical Areas in Chapter 1 and Supplements 1.II and 1.III

Topical Area/Subject	UVH System with MPC-32M	UVH System with MPC-68M
Neutron absorber material	1.II.2.2 & 1.III.2.4	1.III.2.4
Neutron shielding materials	1.2.1.3.2 & 1.II.2.3	1.2.1.3.2
Gamma Shielding materials	1.2.1.3.3 & 1.II.2.3	1.2.1.3.3
Lifting appurtenances	1.2.1.4	1.2.1.4
Design Life	1.2.1.5	1.2.1.5
Operational characteristics	1.IV.2.2 & 1.2.2	1.IV.2.2 & 1.III.2.2
Criticality prevention	1.II.2.2 & 1.III.2.2.1	1.III.2.2.1
Chemical safety	1.2.2.3.2	1.2.2.3.2
Operation shutdown modes	1.2.2.3.3	1.2.2.3.3
Instrumentation	1.2.2.3.4	1.2.2.3.4
Maintenance Techniques	1.2.2.3.5	1.2.2.3.5

Table 1.IV.2.2
Miscellaneous Design Data for Version UVH Overpack Used in Safety Analysis

Item	Value	Comment
Reference ambient temperature for normal condition of storage (annual average)	70°F	
Reference ambient temperature for off-normal condition of storage (three-day average)	Table 2.2.2	Same as HI-STORM 100
Reference ambient temperature for extreme condition of storage (three-day average)	Table 2.2.2	

1.IV.4 Generic Cask Arrays

The discussion in Section 1.4 remains applicable to the Version UVH system with the exception of the allowable pitch between any two adjacent casks. See Table 1.IV.4.1 for additional details.

Table 1.IV.4.1

Cask Layout Pitch Data

Cask Array	**Minimum Allowable Pitch between Adjacent Casks (ft)**
2 x N	16
Square Array	

1.IV.5 Licensing Drawings:

The licensing drawing package for the Version UVH overpack is provided in this section. The licensing drawing package in this section also contains the ITS category for Version UVH components and contains dimensions of safety significant parts and subassemblies.

Drawing Number	Title	Revision
12233	HI-STORM 100 UVH Overpack	0

[PROPRIETARY DRAWINGS WITHHELD IN ACCORDANCE WITH 10CFR2.390]

CHAPTER 2.IV: PRINCIPAL DESIGN CRITERIA

2.IV.0 Introduction

The principal design criteria for the HI-STORM 100 Version UVH canister storage system is unchanged in all respects except for those relating to its function related to environment control.

The Version UVH overpack does not have any open penetrations such as air vents in the classical design to permit ventilation of the ambient air and the Closure Lid is installed with a concentric gasket which inhibits the exchange of gas inside the cask with the ambient air. The Closure Lid is emplaced on the cask body with a set of large body bolts which are installed with a small axial clearance to allow any significant increase in internal gas pressure above the ambient pressure, to be relieved once it overcomes the counteracting lid's weight. A simple force equilibrium shows that a pressure rise of 5 psi in the cask cavity is not possible to sustain even under the scenario of maximum density concrete installed in the cask's lid. However, the structural evaluations are performed using a higher internal pressure.

The loadings associated with Version UVH must include internal pressure and external pressure which are not present in the ventilated cask. For all other Design Basis Loadings, Version UVH cask body is the same as the standard HI-STORM 100 cask body described in this FSAR. In this chapter, the Design pressures appropriate to Version UVH are defined and the overpack loadings are re-visited to ensure that the safety analyses presented in other chapters are comprehensive.

The ITS category of the Structures, Systems and Components (HI-STORM 100 UVH Overpack, MPCs, HI-TRACs) important-to-safety for the HI-STORM 100 UVH System are provided in the licensing drawings for the respective components as follow:

- HI-STORM 100 UVH Overpack: Licensing Drawing in Section 1.IV.5 of the Supplement
- MPC-32M: Licensing Drawing in Section 1.II.5 of Supplement II of this FSAR
- MPC-68M: Licensing Drawing in Section 1.5 of Chapter 1 of this FSAR

2.IV.0.1 Principal Design Criteria for the ISFSI Pad

The principal design criteria for the ISFSI pad applicable for the Version UVH cask remains unchanged from the main body of the FSAR with the exception of the requirements identified in Table 2.IV.0.1.

Table 2.IV.0.1

ISFSI Pad Requirements applicable for the Version UVH system

Item	Allowable Value
Concrete Pad Compressive Strength[1] (psi)	5,000 (maximum)

Notes:

[1] Compressive strength of concrete shall be determined based on 28-day break results, consistent with the guidance in NUREG-2215.

2.IV.1 Spent Fuel to be Stored

The Version UVH overpack is compatible with select MPC models. All fuel assembly array/classes and non-fuel hardware which are authorized for storage in these MPCs are authorized for storage in Version UVH. All fuel storage characteristics applicable to these MPCs remain unchanged for the Version UVH. See Table 2.IV.1.1 for additional information. Allowable storage locations for damaged fuel assemblies is shown in Table 2.IV.1.9.

2.IV.1.1 Design Heat Load

The permissible heat load is also reduced to accord with the diminished heat rejection capacity of the Version UVH overpack. Permissible heat loads based on MPC type are listed in Tables 2.IV.1.2 through 2.IV.1.5.

For PWR fuel with a longer active fuel length than the reference fuel, the maximum total heat load limit, maximum section heat load limits, and specific heat load limits in each cell, may be increased by the ratio SQRT(L/144), where L is the active length of the fuel in inches.

For PWR fuel with a shorter active fuel length than the reference fuel, the maximum total heat load limit, maximum section heat load limits, and specific heat load limits in each cell, shall be reduced linearly by the ratio L/144, where L is the active fuel length of the fuel in inches.

2.IV.1.2 Radiological Parameters for Spent Fuel and Non-Fuel Hardware

The MPC-32M and MPC-68M canisters are authorized to store spent fuel assemblies with the minimum cooling time as a function of the assembly burnup. Non-fuel hardware may be stored in the PWR fuel assemblies in MPC-32M as specified in Table 2.IV.1.6.

The burnup and cooling time for every fuel assembly loaded into the MPC must satisfy the following equation:

$$Ct = A \cdot Bu^3 + B \cdot Bu^2 + C \cdot Bu + D$$

where,

Ct	= Minimum cooling time (years),
Bu	= Assembly-average burnup (MWd/mtU),
A, B, C, D	= Polynomial coefficients listed in Tables 2.IV.1.7 and 2.IV.1.8.

The coefficients for the above equation for the fuel assembly in an individual cell depend on the heat load limit in that cell. Tables 2.IV.1.7 and 2.IV.1.8 list the coefficients for several heat load limit ranges for the MPC-32M and MPC-68M baskets, respectively. Note that the heat load limits are only used for the lookup of the coefficients in that table, and do not imply any equivalency.

Specifically, meeting the heat load limits established in Section 2.IV.1.1 is not a substitute for meeting burnup and cooling time limits herein, and vice versa.

Table 2.IV.1.1

HI-STORM 100 Version UVH Compatible MPCs

MPC Type	Fuel Storage Characteristics
MPC-32M	See Section 2.II.1.5
MPC-68M	See Section 2.III.1

TABLE 2.IV.1.2
HI-STORM 100 UVH MPC-32M HEAT LOAD DATA Note 2

Number of Regions: 2

Number of Storage Cells: 32

Maximum Total Heat Load (kW): 25

Maximum Section Heat Load (kW): 3.125 (Note 1)

Region No.	Decay Heat Limit per Cell, kW	Number of Cells per Region	Decay Heat Limit per Region, kW
1 (Inner)	0.781	12	9.375
2 (Outer)	0.781	20	15.625

Note 1: Figure 2.IV.1.1 identifies MPC basket regions and the cell locations in each section.
Note 2: Heat load limits provided in this table are for reference length fuel assemblies (144 in. active length). Maximum total heat load, maximum quadrant heat load and specific cell heat load limits may need to be adjusted in accordance with Section 2.IV.1.1.
Note 3: This pattern can be modified to develop regionalized patterns in accordance with the requirements in Table 2.IV.1.3.

TABLE 2.IV.1.3
HI-STORM 100 UVH MPC-32M REQUIREMENTS ON DEVELOPING REGIONALIZED HEAT LOAD PATTERNS (See Figure 2.IV.1.1)

1. Total MPC aggregate Heat Load must be equal to 25 kW
2. Maximum Section Heat Load must be equal to 3.125 kW, calculated as defined in Figure 2.IV.1.1, and pattern must be 1/8th symmetric
3. Maximum Heat Load per Cell in Region 1 is 0.781 kW
4. Maximum Heat Load per Cell in Region 2 is 1.562 kW
5. Pattern-specific Heat Loads in a storage cell may need to be adjusted to meet items 1 and 2
6. Pattern-specific Heat Load for storage cells may be determined by reducing the allowable heat load in any Region 1 cell in Table 2.IV.1.2 by a certain amount (Δ) and adding the same Δ to a single cell or distributed amongst multiple cells in Region 2. i.e. Any reduction of total allowable heat load in Region 1 must be compensated by an equivalent addition in Region 2.

General Notes –
1. Any assembly with a Heat Load less than the limits defined above can be loaded in the applicable cell, provided it meets all other CoC requirements.
2. DFCs/DFIs are permitted in locations denoted in Table 2.IV.1.9 with the applicable Heat Load penalties identified therein.

TABLE 2.IV.1.4 HI-STORM 100 UVH MPC-68M HEAT LOAD DATA			
Number of Regions: 2			
Number of Storage Cells: 68			
Maximum Total Heat Load (kW): 25			
Maximum Section Heat Load (kW): 3.125 (Note 1)			
Region No.	Decay Heat Limit per Cell, kW	Number of Cells per Region	Decay Heat Limit per Region, kW
1 (Inner)	0.368	32	11.765
2 (Outer)	0.368	36	13.325
Note 1: Figure 2.IV.1.2 identifies MPC basket regions and the cell locations in each section. Note 2: This pattern can be modified to develop regionalized patterns in accordance with the requirements in Table 2.IV.1.5.			

TABLE 2.IV.1.5
HI-STORM 100 UVH MPC-68M REQUIREMENTS ON DEVELOPING REGIONALIZED HEAT LOAD PATTERNS (See Figure 2.IV.1.2)

1. Total MPC aggregate Heat Load must be equal to 25 kW
2. Maximum Section Heat Load must be equal to 3.125 kW, calculated as defined in Figure 2.IV.1.2, and pattern must be $1/8^{th}$ symmetric
3. Maximum Heat Load per Cell in Region 1 is 0.368 kW
4. Maximum Heat Load per Cell in Region 2 is 0.735 kW
5. Pattern-specific Heat Load in a storage cell may need to be adjusted to meet items 1 and 2
6. Pattern-specific Heat Load for storage cells may be determined by reducing the allowable heat load in any Region 1 cell in Table 2.IV.1.4 by a certain amount (Δ) and adding the same Δ to a single cell or distributed amongst multiple cells in Region 2. i.e. Any reduction of total allowable heat load in Region 1 must be compensated by an equivalent addition in Region 2.

General Notes –

1. Any assembly with a Heat Load less than the limits defined above can be loaded in the applicable cell, provided it meets all other CoC requirements.
2. DFCs/DFIs are permitted in locations denoted in Table 2.IV.1.9 with the applicable Heat Load penalties identified therein.

Table 2.IV.1.6

Non-Fuel Hardware Burnup and Cooling Time Limits (Notes 1, 2)

Post-irradiation Cooling Time (years)	Inserts (Note 3) Burnup (MWD/MTU)	TPD (Note 4) Burnup (MWD/MTU)	Control Component (Note 5), NSA Burnup (MWD/MTU)
≥ 1	≤ 60,000	≤ 225,000	NA (Note 6)
≥ 2	-	-	≤ 630,000

Notes:

1. Burnups for non-fuel hardware are to be determined based on the burnup and uranium mass of the fuel assemblies in which the component was inserted during reactor operation.
2. Non-fuel hardware burnup and cooling times are not applicable to ITTRs since they are installed post irradiation.
3. Includes Burnable Poison Rod Assemblies (BPRAs), Wet Annular Burnable Absorbers (WABAs), and vibration suppressor inserts.
4. Includes Thimble Plug Devices (TPDs), water displacement guide tube plugs and orifice rod assemblies.
5. Includes Axial Power Shaping Rods (APSRs), Control Rod Assemblies (CRAs), Control Element Assemblies (CEAs) and Rod Cluster Control Assemblies (RCCAs).
6. NA means not authorized for loading at this cooling time.

Table 2.IV.1.7

Burnup and Cooling Time Fuel Qualification Requirements for MPC-32M

Cell Decay Heat Load Limit (kW)	Polynomial Coefficients, see Subsection 2.IV.1.2			
	A	B	C	D
≤ 0.83	6.57083E-14	-4.02593E-09	1.47107E-04	8.01647E-01
0.83 < decay heat ≤ 3.26	3.76103e-16	4.83486e-11	1.74805e-05	6.53455e-01

Table 2.IV.1.8

Burnup and Cooling Time Fuel Qualification Requirements for MPC-68M

Cell Decay Heat Load Limit (kW)	Polynomial Coefficients, see Subsection 2.IV.1.2			
	A	B	C	D
≤ 0.382	9.44656e-14	-8.01992e-09	2.79524e-04	-4.10441e-01
0.382 < decay heat ≤ 1.625	8.59250e-15	-1.40950e-09	9.57523e-05	-1.02585e+00

Table 2.IV.1.9

DFC and DFI Storage Locations with Heat Load penalties for MPC-32M and MPC-68M

MPC Type	DFC/DFI (Note 1)	Locations/Storage Cell Numbers (Note 2)	Heat Load Penalty (Note 3)	Min. Soluble Boron Content
MPC-32M	DFI	1, 2, 3, 4, 5, 10, 11, 16, 17, 22, 23, 28, 29, 30, 31, 32	40%	See Table 2.II.1.9
	DFC		5%	See Table 2.II.1.11
	DFC or DFI		DFCs – 5% DFIs – 40%	
MPC-68M	DFI	1, 2, 3, 8, 9, 16, 25, 34, 35, 44, 53, 60, 61, 66, 67, 68	25%	N/A
	DFC		25%	
	DFC or DFI		DFCs – 25% DFIs – 25%	

Note 1: Damaged fuel assemblies or fuel debris can be loaded in DFCs while only damaged fuel assemblies that can be handled by normal means can be loaded in DFIs.

Note 2: DFCs/DFIs are allowed for storage in certain basket peripheral locations as defined herein. Basket storage cell numbers are identified in Figure 2.IV.1.1 and 2.IV.1.2 for the MPC-32M and MPC-68M, respectively.

Note 3: Heat load penalties are applicable to ONLY those cells where DFCs/DFIs are located and are applied to the allowable undamaged fuel assembly decay heat limit in that storage cell location. The penalties remain the same for all regionalized patterns and discrete loading patterns.

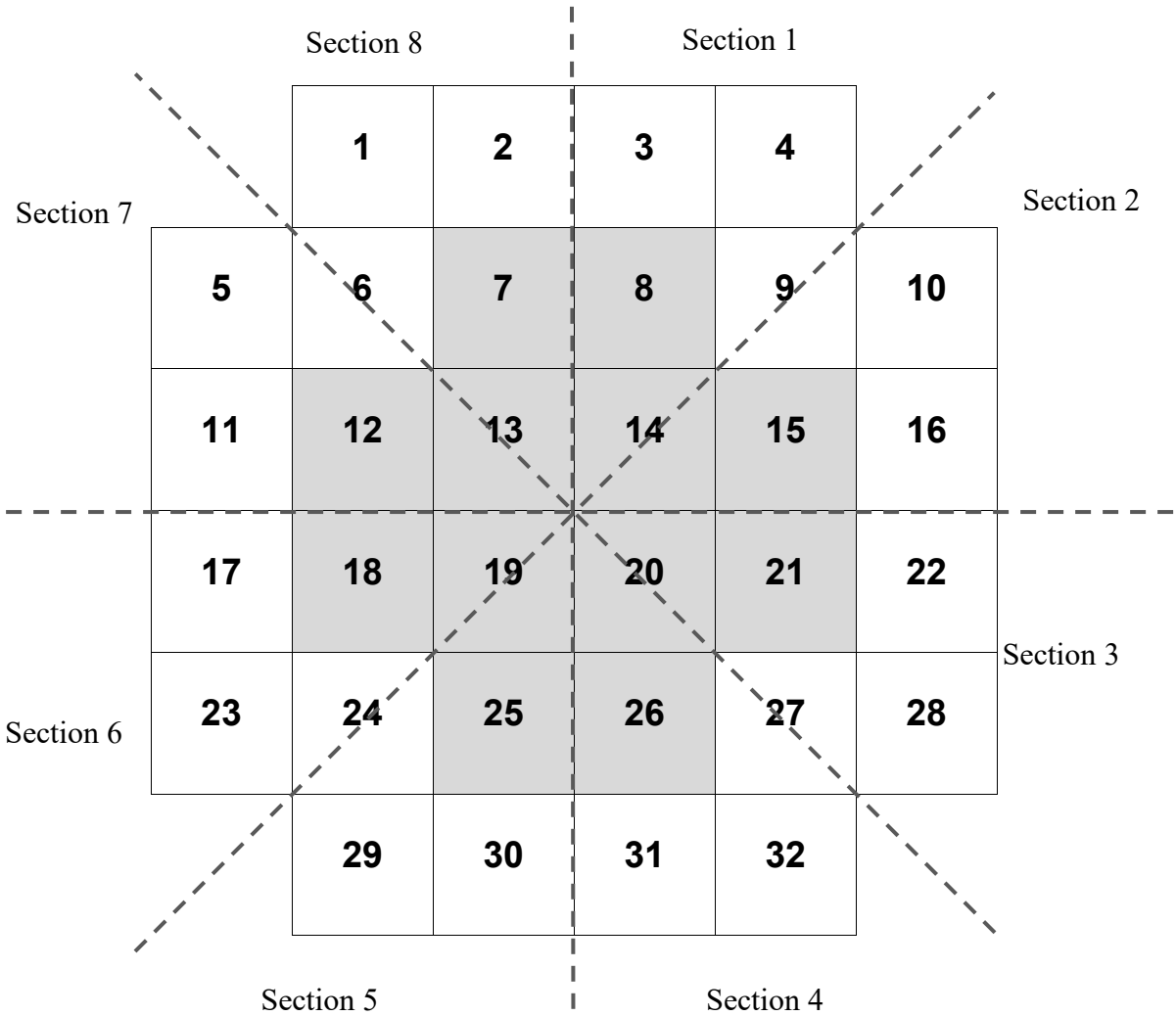

Figure 2.IV.1.1 – MPC-32M Cell and Section Identification

Cells shaded in gray are designated as region 1 (inner). To calculate the per section heat load, the following apply, where Q represents the heat load in the identified cell in kW.

Section 1: $Q_3 + Q_4 + Q_8 + ½Q_9 + ½Q_{14}$
Section 2: $Q_{10} + Q_{15} + Q_{16} + ½Q_9 + ½Q_{14}$
Section 3: $Q_{21} + Q_{22} + Q_{28} + ½Q_{20} + ½Q_{27}$
Section 4: $Q_{31} + Q_{32} + Q_{26} + ½Q_{20} + ½Q_{27}$
Section 5: $Q_{29} + Q_{30} + Q_{25} + ½Q_{19} + ½Q_{24}$
Section 6: $Q_{17} + Q_{18} + Q_{23} + ½Q_{19} + ½Q_{24}$
Section 7: $Q_{11} + Q_{12} + Q_5 + ½Q_6 + ½Q_{13}$
Section 8: $Q_1 + Q_2 + Q_7 + ½Q_6 + ½Q_{13}$

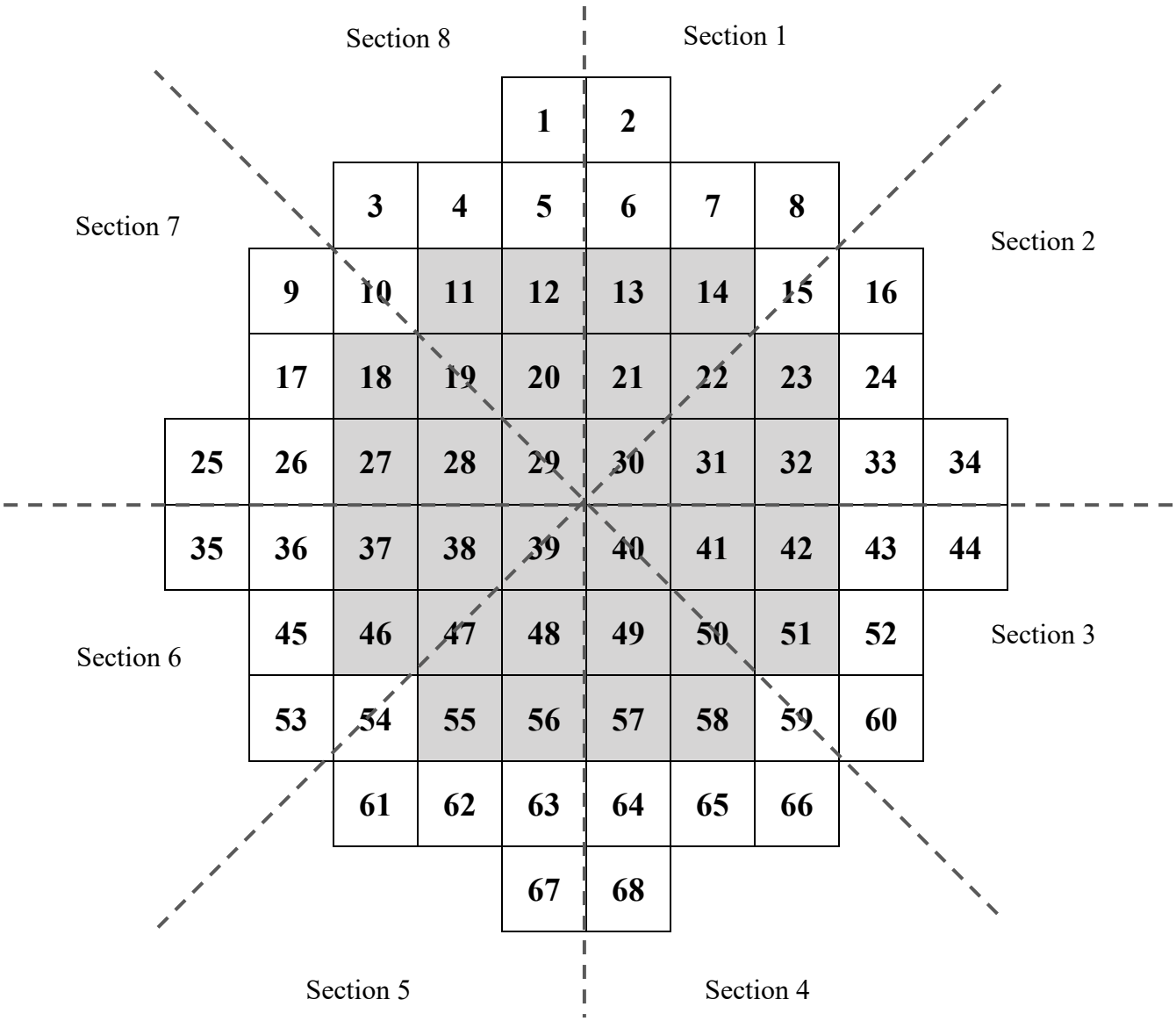

Figure 2.IV.1.2 – MPC-68M Cell and Section Identification

Cells shaded in gray are designated as region 1 (inner). To calculate the per section heat load, the following apply, where Q represents the heat load in the identified cell in kW.

Section 1: $Q_{21} + Q_{13} + Q_{14} + Q_6 + Q_7 + Q_8 + Q_2 + ½Q_{30} + ½Q_{22} + ½Q_{15}$
Section 2: $Q_{31} + Q_{32} + Q_{23} + Q_{33} + Q_{24} + Q_{16} + Q_{34} + ½Q_{30} + ½Q_{22} + ½Q_{15}$
Section 3: $Q_{41} + Q_{42} + Q_{51} + Q_{43} + Q_{52} + Q_{60} + Q_{44} + ½Q_{40} + ½Q_{50} + ½Q_{59}$
Section 4: $Q_{49} + Q_{58} + Q_{57} + Q_{64} + Q_{65} + Q_{66} + Q_{68} + ½Q_{40} + ½Q_{50} + ½Q_{59}$
Section 5: $Q_{48} + Q_{56} + Q_{55} + Q_{61} + Q_{62} + Q_{63} + Q_{67} + ½Q_{39} + ½Q_{47} + ½Q_{54}$
Section 6: $Q_{38} + Q_{46} + Q_{37} + Q_{36} + Q_{45} + Q_{53} + Q_{35} + ½Q_{39} + ½Q_{47} + ½Q_{54}$
Section 7: $Q_{28} + Q_{27} + Q_{18} + Q_9 + Q_{17} + Q_{26} + Q_{25} + ½Q_{29} + ½Q_{19} + ½Q_{10}$
Section 8: $Q_{20} + Q_{11} + Q_{12} + Q_3 + Q_4 + Q_5 + Q_1 + ½Q_{29} + ½Q_{19} + ½Q_{10}$

2.IV.2 Principal Design Criteria

2.IV.2.1 Mechanical Loadings

The Mechanical Loadings applicable to the Version UVH overpack are summarized in Table 2.IV.2.1 where in most cases the justification for their admissibility is provided, obviating the need for a structural evaluation in Chapter 3.IV.

a) Loadings unique to Version UVH by virtue of its vent-less design arise from the potential for the internal pressure in the cavity decrease sharply under extreme cold conditions. To bound all potential pressure variations, the Design Basis Internal Pressure (DBIP) in the cask cavity is set equal to *full vacuum* on the lower end and a bounding value is applied on the upper end in Table 2.IV.2.3.

b) Accident External Pressure: A state of external pressure may arise if the cask is submerged by flood waters or is exposed to pressure wave from an explosive device. The Accident External Pressure (AEP) for this condition is set down at a value which is based on the site-specific loadings being used at numerous operating ISFSIs (Table 2.IV.2.3).

c) Accident Internal Pressure: Because the Lid is free to relieve any excess air pressure, there is no credible means for the internal pressure in the cask's annular space to exceed the pressure that would equilibrate the lid's weight. However, for conservatism, the Accident Internal Pressure (AIP) in the cask cavity is set to a bounding value in Table 2.IV.2.3.

d) Acceptance criterion: It is necessary to demonstrate that the dual wall cask shell structure, cask's Base Plate and its Closure Lid can withstand all loadings without exceeding the stress limits set forth in Section III Subsection NF of the ASME Code.

2.IV.2.2 Thermal Loadings

The Thermal Loadings applicable to the Version UVH cask are summarized in Table 2.IV.2.2, with considerations as follows. Temperature limits applicable for the Version UVH system are identified in Table 2.IV.2.4.

a. Normal Condition of Storage (T-1): The reference ambient conditions corresponding to the normal, off-normal, and accident conditions of storage are provided in Table 1.IV.2.2. These environmental conditions have been determined to bound their respective meteorological data for the entire continental United States. Unsheltered condition of storage requires inclusion of insolation to the storage system as external heat input.

b. Accident Condition of Storage: This condition is characterized by an elevated ambient temperature (Table 1.IV.2.2).

c. Design Basis Fire: The accident condition design temperature limits for the Version UVH system are specified in Table 2.2.3. The specified fuel cladding temperature limits are based on the temperature limits specified in ISG-11, Rev 3.

2.IV.2.3 Lifting and Handling Safety

Lifting and handling of the Version UVH within Part 72 jurisdiction must be carried out using "Lifting Devices" or "Special Lifting Devices" qualified to "Single Failure Proof" criteria as defined in Section 2.II.2.7. As such, a handling accident of the Version UVH system is not credible.

Table 2.IV.2.1; Evaluation of the Mechanical Loadings for the Version UVH Storage Cask			
Applicable Loading Case from Table 2.2.14	**Load Case Description**	**Subsection in the main report where the loading is explained**	**Safety Consideration and Conclusion**
4	Moving Floodwaters Moving Floodwater with loaded HI-STORM on the pad	2.2.3.6	Determine the flood velocity that will not overturn the overpack. Because the weight of the loaded cask is slightly greater than the standard HI-STORM 100 overpack, due to removal of the vent openings, the resistance to overturning will be slightly greater. Therefore, the admissible flood water velocity based on the standard overpack design is conservative.
4	Design Basis Earthquake (DBE) Loaded HI-STORMs arrayed on the ISFSI pad subject to ISFSI's DBE	2.2.3.7	This case involves determining the maximum magnitude of the earthquake that meets the acceptance criteria of section 2.2.3.7. Because the outer diameter (OD) and height of the CG of Version UVH cask are essentially identical to the reference cask analyzed in Chapter 3, the discussion in Section 3.4.7 is applicable to Version UVH cask.
4	Strike by a Tornado-borne Missile A large, medium or small tornado missile strikes a loaded HI-STORM on the ISFSI pad or a loaded HI-TRAC	2.2.3.5	This criterion requires that the acceptance criteria of 2.2.3.5 be met. The intermediate and small Design Basis Tornado missiles are evidently satisfied by Version UVH because it is structurally identical to the standard HI-STORM 100 cask, except for the absence of vent penetrations which is a positive structural advantage for Version UVH. A stability analysis is performed for the large design basis missile.
4	Non-Mechanistic Tip-Over A loaded HI-STORM is assumed to tip over and strike the pad.	2.II.2.2	Version UVH's response to the tip-over event is analyzed in Chapter 3.IV to demonstrate that the acceptance criteria of 2.II.2.2 is satisfied (applicable for both the MPC-32M and MPC-68M).
4	Explosion The HI-STORM is exposed to an external pressure resulting from an explosion.	2.2.3.10	Version UVH's response to an explosion event is analyzed in Chapter 3.IV to demonstrate that the overpack is capable of withstanding the resulting pressure differential.

Table 2.IV.2.1; Evaluation of the Mechanical Loadings for the Version UVH Storage Cask			
Applicable Loading Case from Table 2.2.14	**Load Case Description**	**Subsection in the main report where the loading is explained**	**Safety Consideration and Conclusion**
1	Handling Accident Vertical free fall of the HI-STORM during handling	2.2.3.1	Uncontrolled lowering of the Version UVH is not credible as lifting devices must meet single failure proof criteria, as described in Section 2.IV.2.3.
1	Handling of Cask	2.2.1.2	The methodology for evaluating the handling loads remains applicable. The lifting analysis of the standard HI-STORM 100 cask using bounding lifted weight in Table 2.0.2 remains applicable for Version UVH cask. Site specific verification of the handling loads is required under the plant's §72.212 mandated by the system's CoC.
NA	Snow Load	2.2.1.6	The Design Basis snow load in Chapter 3 is used to evaluate the Version UVH Closure Lid in Chapter 3.IV.

Table 2.IV.2.2; Governing Thermal Loading Conditions

Thermal Loading ID	Caption of Loading	Applicable FSAR paragraph	Comments
T-1	Normal Condition of Storage	2.2.1	The ISG-11, Rev 3 peak cladding temperature limits specified in Table 2.2.3 of this FSAR must be met. In addition, the temperature of proximate safety significant materials must meet applicable temperature limits as described in Table 2.IV.2.4.
T-2	Design Basis Fire	2.2.3.3	
T-3	Extreme Environment Temperatures	2.2.3.14	
T-4	Burial under debris	2.2.3.12	The Version UVH overpack does not experience a significant loss of its heat dissipation capability under this event due to its lack of ventilation passages and lower allowable heat loads compared to the standard overpack design. Therefore, the evaluation for the standard overpack design remains conservative.

Table 2.IV.2.3; Design Basis Pressure Loadings applicable to the Version UVH Canister Storage Cask

Loading	Value, psig	Comment
Design Basis Minimum Internal Pressure	-14.7	Corresponds to full vacuum
Design Basis Maximum Internal Pressure	10	Bounding internal pressure under normal conditions.
Accident External Pressure	60	Bounding steady state pressure assumed to act on all external surfaces of the overpack
Accident Internal Pressure	15	Bounding internal pressure under hypothetical conditions
MPC-32M Design Internal and External Pressures	See Table 1.II.2.3	See Table 1.II.2.3
MPC-68M Design Internal and External Pressure	See Table 2.2.1	See Table 2.2.1

Table 2.IV.2.4; Temperature Limits applicable for the Version UVH system			
Component	**Long term, Normal Condition Design Temperature Limits (°F)**	**Short-Term Events (°F)**	**Off-Normal and Accident Condition (°F)**
Fuel Cladding	See Table 2.2.3	See Table 2.2.3	See Table 2.2.3
MPC-68M Enclosure Vessel	See Table 2.2.3	See Table 2.2.3	See Table 2.2.3
MPC-68M Basket & Basket Shims	See Table 4.III.2	See Table 4.III.2	See Table 4.III.2
MPC-32M (including Basket and Basket Shims)	See Table 2.II.2.9	See Table 2.II.2.9	See Table 2.II.2.9
Overpack Concrete	See Table 2.2.3	See Table 2.2.3	See Table 2.2.3
Overpack Steel Structure	See Table 2.2.3	See Table 2.2.3	See Table 2.2.3

2.IV.3 Safety Protection Systems

Same as Section 2.3 in the main report except as noted below.

2.IV.3.2.2 Cask Cooling

Unlike the ventilated overpack design described in the main body of this FSAR, the Version UVH overpack does not rely on ventilation passages for its means of cooling. Heat dissipation from the MPC in the Version UVH overpack is primarily facilitated through conduction and radiation based heat transfer. Heat is then carried to the overpack external surfaces through conduction and is then rejected to the environment through natural convection and radiation.

2.IV.4 Decommissioning Considerations

The decommissioning considerations described in Section 2.4 remain applicable.

2.IV.5 Safety Conclusions

The evaluations in this supplement show that:

- The loadings specified in Chapter 2 for the standard HI-STORM 100 ventilated overpacks, that are also applicable to the unventilated Version UVH overpack, are satisfied without additional analysis.
- Additional loadings - internal and external pressures have been identified for Version UVH that warrant analysis to demonstrate safety compliance with the acceptance criteria in this supplement.
- The non-mechanistic tip-over of a freestanding Version UVH system needs to be performed to demonstrate that the plastic deflection of the basket panels will not exceed the prescribed limits defined in Supplements 2.II and 2.III for the MPC-32M and MPC-68M, respectively.
- A handling accident is not credible for the Version UVH through the use of single failure proof lifting devices.
- A thermal analysis of the Version UVH is warranted to ensure peak cladding temperature remains below ISG-11 limits.
- All other components of the Storage system are unaffected by the choice of the version of the overpack employed in the Storage system.

CHAPTER 3.IV: STRUCTURAL EVALUATION

3.IV.0 Overview

This supplement to Chapter 3 in the main report presents the safety analysis summaries of load cases defined in Chapter 2.IV and demonstrates compliance with the acceptance criteria set forth therein. In addition to providing quantitative safety margins, the material in this supplement to Chapter 3 provides acceptable analysis methods and acceptable analysis codes which can be used for analyzing site specific loadings under the purview of 10CFR72.212. This chapter contains the structural safety analysis of the HI-STORM 100 storage system containing the Version UVH overpack (hereafter referred to as the *Storage System* for brevity) illustrated in Figure 1.IV.0.1 and in the Licensing drawing package in Section 1.IV.5.

3.IV.1 Structural Loading Cases

Table 2.IV.2.1 provides the mechanical loading cases for the HI-STORM 100 Version UVH storage overpack and their content (enclosure with MPC-32M and MPC-68M baskets). Subsection 2.IV.2 provides the associated acceptance criteria. The allowable stress tables for steel and Alloy X materials in Chapter 3 in the main body of this FSAR [3.IV.1] are used in the stress analyses.

For Fuel Baskets made of Metamic HT, the deflection based structural criterion applies as set forth in Table 2.2.11 of the HI-STORM FW FSAR [3.IV.2].

3.IV.2 Weights and Centers of Gravity

The diameters of the MPC enclosure, HI-STORM 100 Version UVH and MPC-32M are fixed, their height is dependent on the length of the fuel assembly. The minimum MPC cavity height (which determines the external height of the MPC) is set equal to the nominal fuel length (along with control components, if any) plus Δ, where Δ is between 1.5" (minimum), 2.0" (maximum), Δ is increased above 1.5" so that the MPC cavity height is a full inch or half-inch number. Thus, for the most common PWR fuel (W 17 by 17) whose length including control components is 167.2," Δ = 1.8" so that the MPC cavity height, c, becomes 169". Δ is provided to account for irradiation and thermal growth of the fuel in the reactor. The cavity heights of the HI-STORM 100 Version UVH overpack and the HI-TRAC transfer cask are set greater than the MPC height by fixed amounts to account for differential thermal expansion and manufacturing tolerances. Table 3.IV.2.1 provides the minimum height data on HI-STORM 100 Version UVH, HI-TRAC, and the MPC as the adder to the MPC cavity length, h.

The bounding weights of the loaded MPC containing "reference SNF" and the loaded HI-STORM 100 Version UVH cask are provided in Table 3.IV.2.2 and are already presented in Table 3.2.1 of the FSAR. The weight data in Table 3.IV.2.2 is used in the structural safety analyses in this chapter.

The maximum and minimum locations of the centers of gravity (CGs) are presented (in dimensionless form) in Table 3.IV.2.3. The radial eccentricity, ϕ, of a cask system is defined as:

$$\phi = \frac{\Delta_r}{D} \times 100 \text{ (}\phi\text{ is dimensionless)}$$

where Δ_r is the radial offset distance between the CG of the cask system and the geometric centerline of the cask, and D is the outside diameter of the cask. In other words, the value of ϕ defines a circle around the axis of symmetry of the cask within which the CG lies (see Figure 3.IV.2.1). All centers of gravity are located close to the geometric centerline of the cylindrical cask since the non-axisymmetric effects of the cask system and its contents are very small. The vertical eccentricity, Ψ, of a cask system is defined similarly as:

$$\Psi = \frac{\Delta_v}{H} \times 100 \text{ (}\Psi\text{ is dimensionless)}$$

Where Δ_v is the vertical offset distance between the CG of the cask system and the geometric center of the cask (i.e., cask mid-height), and H is the overall height of the cask. A positive value of Ψ indicates that the CG is located above the cask mid-height, and a negative value indicates that the CG is located below the cask mid-height. Figure 3.IV.2.2 illustrates how Ψ is defined.

The values of ϕ and Ψ given in Table 3.IV.2.3 are bounding values, which take into consideration material and fabrication tolerances. For a specific site, the Solidworks models from which the Licensing drawings are extracted can be used to obtain precise weight and CG data.

Table 3.IV.2.1: Minimum MPC, HI-TRAC, and HI-STORM Height Data Corresponding to Unirradiated Fuel Length, ℓ †‡	
MPC Cavity Height, c	$\ell + \Delta$‡
MPC Height (including top lid, excluding closure ring), h	c + 12.25”
HI-TRAC Cavity Height	h + 1”
HI-STORM 100 Version UVH Cavity Height	h + 1.75”
HI-STORM 100 Version UVH Body Height (height from the bottom of the HI-STORM 100 Version UVH to the top surface of the shear ring at the top of the cask body)	h + 4”
HI-STORM 100 Version UVH Height (loaded over the pad)	h + 24 3/4”

Table 3.IV.2.2: MPC Weight Data		
Item	Nominal Weight in pounds	Comment
Fully loaded MPC with SNF	90,000	Weight of the fully loaded MPC is based on maximum fuel assembly weights
Overpack with fully loaded MPC-32M or MPC-68M	410,000	At 200 pcf, bounding weight of a fully loaded overpack

Table 3.IV.2.3: Location of c.g. With Respect to the Centerpoint on the Equipment’s Geometric Centerline			
	Item	**Radial eccentricity (dimensionless), ϕ**	**Vertical eccentricity (dimensionless), Above (+) or Below (-), ψ**
1.	Empty HI-STORM with lid installed	2.0	±3.0
2.	Empty HI-STORM without top lid	2.0	±3.0
3.	HI-STORM 100 Version UVH with fully loaded stored MPC without top lid	2.0	±2.0
4.	HI-STORM with lid and a fully loaded MPC	2.0	±3.0

† Fuel Length, ℓ , shall be based on the fuel assembly length with or without a damaged fuel container (DFC) or a Damaged Fuel Isolator (DFI). Users planning to store fuel in DFCs or DFIs shall adjust the length ℓ to include their addition to the cavity height.

‡ Δ shall be selected as 1.5” < Δ < 2.0” so that c is an integral multiple of 1/2 inch (add 1.5” to the fuel length and round up to the nearest 1/2” or full inch).

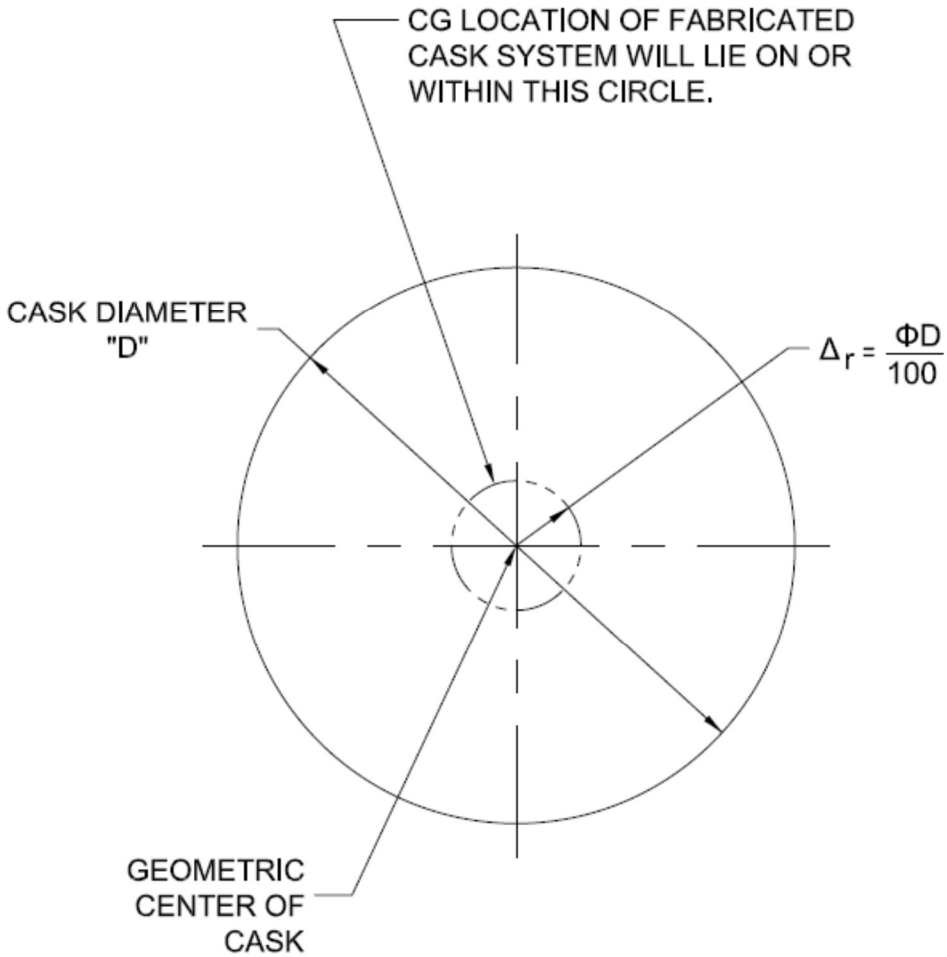

Top View of Cask

Figure 3.IV.2.1: Radial Eccentricity of Cask Center of Gravity

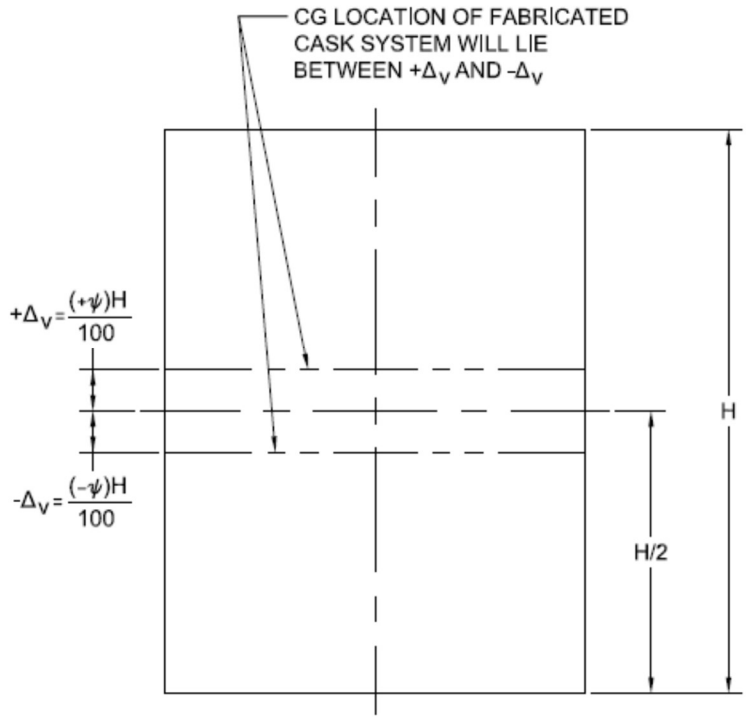

Elevation View of Cask

Figure 3.IV.2.2: Vertical Eccentricity of Cask Center of Gravity

3.IV.3 Mechanical Properties of Materials

The information provided in Section 3.2 in the main body of this FSAR remains valid and unchanged.

3.IV.4 General Standards for Casks

3.IV.4.1 Positive Closure

There are no quick-connect/disconnect ports in the Confinement Boundary of the HI-STORM 100 Version UVH Overpack system. The only access to the MPC is through the storage overpack lid. The lid is fastened to the storage overpack with large bolts. Inadvertent opening of the storage overpack is not feasible because opening a storage overpack requires mobilization of special tools and heavy-load lifting equipment.

3.IV.4.2 Lifting Devices

3.IV.4.2.1 Identification of Lifting Devices and Required Safety Factors

The safety evaluation of the lifting and handling operations involving HI-STORM system components is considered in this section. In particular, the appurtenances integral to the cask components used in the lifting operations are evaluated in compliance with NUREG-0612 [3.IV.3], Reg. Guide 3.61 [3.IV.4], and the ASME Code as applicable.

The following design features of Threaded Anchor Locations (TALs) are relevant to their stress analysis:

All TALs consist of vertically tapped penetrations in the solid metal blocks. For example, the HI-STORM 100 UVH overpack body (like all HI-STORM models) have tapped holes in the "anchor blocks" that are engaged for lifting. The loaded MPC is lifted at four threaded penetrations in the top lid as depicted on the licensing drawings in Section 1.5 of the FSAR. Likewise, eight vertically tapped holes in the top flange provide the lift points for HI-TRAC transfer cask.

Operations involving loaded HI-STORM 100 Version UVH cask involve handling evolutions in the vertical orientation. While the lifting devices used by a specific nuclear site shall be custom engineered to meet the architectural constraints of the site, all lifting devices are required to engage the tapped connection points using a vertical tension member such as a threaded rod. Thus, the loading on the cask during lifting is purely vertical.

The stress analysis of the HI-STORM 100 Version UVH components, therefore, involves applying a vertical load equal to D*/n at each of the n (number) TAL locations. Thus, for the case of the HI-STORM 100 Version UVH overpack, n = 4 (four "anchor blocks" as shown in the licensing drawings in Section 1.II.5).

The stress limits during a lift for individual components set down in sub-section 2.2.9 are recapped in the following for convenience:

Lift points (MPC, HI-STORM 100 Version UVH and HI-TRAC): The stress in the threads must be the less than $1/10^{th}$ of its ultimate strength pursuant to NUREG-0612. The stress limits using Reg. Guide 3.61 do not govern for normal lifting.

Balance of the parts in the load path in the component: The maximum primary stresses (membrane and membrane plus bending) must be below the Level A service condition stress limit using ASME Code, Section III, Subsections NB [3.IV.5] and NF [3.IV.6], as applicable, as the reference codes.

To incorporate an additional margin of safety in the reported safety factors, the following assumptions are made for the lifting analysis:

The bounding weight data for the cask components summarized in Table 3.IV.2.2 is used. Because a great majority of site applications will utilize lower weight components (due to shorter fuel length and other architectural limitations such as restricted crane capacity or DAS slab load bearing capacity, or lack of floor space in the loading pit), there will be an additional margin of safety in the lifting point's capacity at specific plant site.

All material yield strength and ultimate strength values used are the minimum from the ASME Code which are often as much as 20% lower than the actual tested strengths (mill-test reports).

The stress analysis of the lifting operation is carried out using the load combination D+H, where H is the "handling load". The term D denotes the dead load. Quite obviously, D must be taken as the bounding value of the dead load of the component being lifted. In all lifting analyses considered in this document, the handling load H is assumed to be 0.15D. In other words, the inertia amplifier during the lifting operation is assumed to be equal to 0.15g. This value is consistent with the guidelines of the Crane Manufacturer's Association of America (CMAA) [3.IV.7], Specification No. 70, 1988, Section 3.3, which stipulates a dynamic factor equal to 0.15 for slowly executed lifts. Thus, the "apparent dead load" of the component for stress analysis purposes is $D^* = 1.15D$. Unless otherwise stated, all lifting analyses in this FSAR use the "apparent dead load," D^*, as the lifted load.

Unless explicitly stated otherwise, all analyses of lifting operations presented in this supplement follow the load definition and allowable stress provisions of the foregoing. Consistent with the practice adopted throughout this chapter, results are presented in dimensionless form, as safety factors, defined as

$$\text{Safety Factor, } \beta = \frac{\text{Allowable Stress}}{\text{Computed Stress}}$$

In the following subsections, stress analysis of lifting appurtenances is performed to demonstrate compliance with the above criteria. Summary results are presented for each of the analyses.

3.IV.4.2.2 Analysis of Lifting Scenarios

In the following, the safety analysis of the system components subject to normal lifting evolutions is considered.

<u>MPC Lifts</u>

The governing condition for the MPC lift is when it is being raised or lowered in a radiation shielded space defined by the HI-TRAC and the HI-STORM 100 Version UVH stack. The MPC lifting analysis presented in Section 3.4.3.6 of the FSAR remains bounding for the lifting for the MPC with MPC-32M and MPC-68M baskets.

<u>Heaviest Weight HI-TRAC Lift</u>

Per Section 1.IV.2.1.2.2, since no new transfer cask design is proposed in the supplement, the lifting analysis of the HI-TRAC presented in Section 3.4.3 remains applicable and no new analyses are warranted in this supplement.

HI-STORM 100 Version UVH Lifts

Bounding weight of the loaded HI-STORM 100 Version UVH set down in Table 3.IV.2 is used for the stress analysis. Another scenario involves lifting of the HI-STORM Lid independently using its lugs.

i. HI-STORM TAL stress analysis:

A strength evaluation of the tapped connection points in the HI-STORM Anchor Blocks is summarized in Section 3.D.6 per [3.IV.8], which provides the input data, intermediate calculated data and finally, the factor-of-safety. It is evident that the safety margin for this lifting attachment is quite large.

ii. Stress analysis of HI-STORM 100 Version UVH body:

As per Table 2.IV.2.1, the lifting analysis of the standard HI-STORM 100 cask using bounding lifted weight in Table 2.0.2 remains applicable for Version UVH cask and hence no new analysis is warranted.

iii. Lid Lift Analysis

The stress analysis of the overpack lid under normal handling conditions is performed using ANSYS static stress analysis code [3.IV.9]. The finite element model of the overpack closure lid is shown in Figure 3.IV.4.1. Bounding weight of the overpack lid is used in this analysis. The resulting stress distribution in the steel structure of the overpack lid under the applied handling load is shown in Figure 3.IV.4.2. The maximum stresses and the corresponding safety factors are summarized in Table 3.IV.4.1. The details pertaining to this analysis are presented in calculation package [3.IV.10]. For conservatism, the maximum primary stress in the lid is compared against the primary membrane and primary bending stress limits per Subsection NF (class 3 structures) of the ASME Code for Level A conditions. The allowable stresses are taken at bounding temperature, which exceeds the maximum operating temperature for the overpack top lid under normal operating conditions.

3.IV.4.2.3 Safety Summary for Lifting Scenarios

As can be seen from the above evaluations, the computed factors of safety have a large margins over the allowable, 1.0, in every case. In the actual fabricated hardware, the factors of safety will likely be much greater because of the fact that the actual material strength properties are generally substantially greater than the ASME Code minimums. Minor variations in manufacturing, on the other hand, may result in a small subtraction from the above computed factors of safety. A part 72.48 safety evaluation will be required if the cumulative effect of manufacturing deviation and use of the CMTR (or CoC) material strength in a manufactured hardware renders a factor of safety to fall below the above computed value. The above criterion applies to all lift calculations covered in this supplement.

3.IV.4.3 Safety Analysis Under Thermal & Mechanical Loadings

3.IV.4.3.1 Safety analysis of Thermal and Pressure States

Design pressures and design temperatures for all conditions of storage listed in Tables 2.2.1 and 2.2.3, respectively, in the main report, remain unchanged for all MPC enclosure vessels.

The pressures loading applicable for the HI-STORM overpack are presented in Table 2.IV.2.2. Using the ANSYS finite element model of MPC described in Paragraph 3.4.3.2 and adding the HI-STORM finite element model (internal shell, ribs, outer shell, baseplate and the lid), two bounding analyses are performed to demonstrate its structural integrity, as described below.

i) The design-basis normal condition internal pressure limit in Table 1.2.2 is applied to MPC lid, shell and baseplate along with temperature contour obtained from normal condition thermal analysis in Chapter 4.IV, whereas, the HI-STORM inner shell, lid and baseplate are applied the design-basis normal internal pressure from Table 2.IV.2.2. Figure 3.IV.4.3 show various loadings applied in the ANSYS finite element model for this loading condition. The primary and secondary stresses in MPC lid, shell, baseplate and the HI-STORM inner shell, lid and baseplate are then compared against ASME NB Level A stress limits obtained at bounding temperatures. The results for this loading condition are presented in Table 3.IV.4.2 and it is demonstrated that all safety factors are greater than 1.0. Further details pertaining to this calculation are documented in [3.IV.10].

ii) The accident condition internal pressure limit in Table 2.2.1 is applied to MPC lid, shell and baseplate along with temperature contour obtained from off-normal condition thermal analysis in Chapter 4.IV, whereas, the HI-STORM inner shell, closure lid and baseplate are subject to accident internal pressure loading from Table 2.IV.2.2. Figure 3.IV.4.4 show various loadings applied in the ANSYS finite element model for this loading condition. The primary and secondary stresses in MPC lid, shell, baseplate and the HI-STORM inner shell, lid and baseplate are then compared against ASME NB Level D stress limits obtained at bounding temperatures. The results for this loading condition are presented in Table 3.IV.4.3 and it is demonstrated that all safety factors are greater than 1.0. Further details pertaining to this calculation are documented in [3.IV.10].

3.IV.4.3.2 Tornado wind and tornado-propelled missile acting synergistically

This loading is described in Paragraph 2.2.3.5 of this FSAR and the loading data is provided in Tables 2.2.4 and 2.2.5.

During a tornado event, the HI-STORM 100 Version UVH overpack is assumed to be subjected to a constant wind force. The overpack is also subject to impacts by postulated missiles. The maximum wind speed is specified in Table 2.2.4 and the missile, designated as large missile are described in Table 2.2.5.

<u>Overturning Analysis</u>

The large tornado missile acting at the top region of the cask to produce maximum overturning effect is analyzed to determine whether the cask will remain stable. Because the site-specific large missile is apt to be different from the one analyzed herein, the method of analysis presented here will provide the means for the site-specific safety evaluation pursuant to 10CFR72.212.

The overturning analysis of the cask under the tornado wind load and large missile impact is performed by solving the 1-DOF equation of motion for the cask angular rotation. Specifically, the solution of the post-impact dynamics problem is obtained by solving the following equation of motion:

$$I_r \alpha = \left(- W_c \frac{a}{2} \right) + F_{max} \left(\frac{L}{2} \right)$$

where:

Ir	=	cask moment of inertia about the pivot point
α	=	angular acceleration of the cask
Wc	=	lower bound weight of the cask
a	=	diameter of cask at its base
Fmax	=	force on the cask due to tornado wind/instantaneous pressure drop
L	=	height of the cask

The impacting missile enters into the above through the post-strike angular velocity of the cask, which is the relevant initial condition for the cask equation of motion. The solution gives the post-impact position of the cask centroid as a function of time, which indicates whether the cask remains stable.

The following conservative assumptions are made in the analysis:

The cask is assumed to be a rigid solid cylinder, with uniform mass distribution. This assumption implies that the cask sustains no plastic deformation (i.e. no absorption of energy through plastic deformation of the cask occurs).

The angle of incidence of the missile is assumed to be such that its overturning effect on the cask is maximized.

The cask is assumed to pivot about a point at the bottom of the base plate opposite the location of missile impact and the application of wind force in order to conservatively maximize the propensity for overturning.

Inelastic impact is assumed, with the missile velocity reduced to zero after impact. This assumption conservatively lets the missile impart the maximum amount of angular momentum to the cask, and it is in agreement with missile impact tests conducted by EPRI [3.IV.11].

The analysis is performed using the minimum loaded HI-STORM 100 Version UVH weight per Table 3.2.1. A lighter cask will tend to rotate further after the missile strike. The weight of the missile is not included in the total post-impact weight.

The missile and wind loads are assumed to be perfectly aligned in direction.

The results for the post-impact response of the HI-STORM 100 Version UVH overpack are summarized in Table 3.IV.4.4 per [3.IV.10]. The table shows that the cask remain in a vertical upright position (i.e., no overturning) in the aftermath of a large missile impact.

Sliding Analysis

A conservative calculation of the extent of sliding of the HI-STORM overpack and the HI-TRAC transfer cask due to the impact of a large missile (Table 2.2.5) and tornado wind (Table 2.2.4) is obtained using a common formulation as explained below.

The principal assumptions that render these calculations for sliding conservative are:

The weight of the cask used in the analysis is assumed to be the lowest bound.

The cask is assumed to absorb the energy of impact purely by sliding. In other words, none of the impact energy is dissipated by the noise from the impact, from local plastic deformation in the cask at the location of impact, or from the potential tipping action of the cask.

The missile impact and high wind, which applies a steady drag force on the cask, are assumed to act synergistically to maximize the movement of the cask.

The cask is assumed to be freestanding on a concrete surface. The interface friction coefficient is assumed to be 0.53 as endorsed in this FSAR.

The dynamic effect of the impact is represented by the force-time curve developed in the Bechtel topical report "Design of Structures for Missile Impact" [3.IV.11], also used in the main report in this FSAR.

The analysis for sliding under the above assumptions reduces to solving Newton's equation of motion of the form:

$$m\frac{d^2x}{dt^2} = F(t) + F_{dp} - \mu mg$$

where

m: mass of the cask,

t: time coordinate with its origin set at the instant when the sum of the missile impact force and wind drag force overcomes the static friction force,

x: displacement as a function of time coordinate t,

F(t): missile impact force as a function of time (from [3.IV.12]),

F_{dp}: drag force from high wind,

μ: interface friction, endorsed by the NRC is 0.53 for freestanding cask on a reinforced concrete pad.

g: acceleration due to gravity.

The above second-order differential equation is solved numerically for the HI-STORM 100 Version UVH overpack and the HI-TRAC Version MS transfer cask, and the calculated sliding displacements are summarized in Table 3.IV.4.4. Further details pertaining this analysis are presented in [3.IV.10].

The maximum sliding computed for a site's large missile impact case sets the minimum inter-cask gap and the distance to the pad's edge at the ISFSI.

3.IV.4.3.3 External pressure resulting from an explosion

The storage system must withstand external pressure loads due to an explosion per Table 2.IV.2.1. HI-STORM 100 Version UVH storage overpack shell buckling is not a credible scenario since the two steel shells plus the entire radial shielding act to resist vertical compressive loading. Subsection 3.4.4.3.2.3 develops values for compressive stress in the steel shells of the storage overpack. Because of the low value for compressive stress coupled with the fact that the concrete shielding backs the steel shells, we can conclude that instability is unlikely. Note that the entire weight of the storage overpack can also be supported by the concrete shielding acting in compression. Therefore, in the unlikely event that a stability limit in the steel was approached, the load would simply shift to the massive concrete shielding. Notwithstanding the above comments, stability analyses of the storage overpack have been performed for bounding cases of longitudinal compressive stress with nominal circumferential compressive stress and for bounding circumferential compressive stress with nominal axial compressive stress. This latter case is for a bounding all-around external pressure on the HI-STORM 100 outer shell. ASME Code Case N-284, a methodology accepted by the NRC, has been used for this analysis. The storage overpack shells for the HI-STORM 100 are examine individually assuming that the four radial plates provide circumferential support against a buckling deformation mode. The analysis of the storage overpack outer shell for a bounding external pressure of

$$p_{ext} = 60 \text{ psi}$$

The factor of safety against buckling required by Code Case N-284 is 1.34. No credit is taken for any support provided by the concrete shielding and the effect of support by radial ribs is conservatively neglected.

The results for buckling of the HI-STORM 100 Version UVH overpack are summarized in Table 3.IV.4.5 per [3.IV.10].

3.IV.4.3.4 Non-mechanistic tip-over

The storage system is evaluated for the non-mechanistic tip-over using the same methodology and acceptance criteria used to evaluate HI-STORM FW in Subsection 2.2.3 of [3.IV.2].

This loading case described in Paragraph 2.2.3.2 applies to a loaded HI-STORM 100 Version UVH module that is not anchored (or otherwise constrained from overturning on the ISFSI pad). The objective of the analysis is to demonstrate that the plastic deformation in the fuel basket is limited to the value at which the criticality safety is maintained, retrieval of the fuel by normal means is assured, and that there is no significant loss of radiation shielding in the storage system.

The tip over event is an artificial construct wherein the HI-STORM 100 Version UVH overpack is assumed to be perched on its edge with its C.G. directly over the pivot point A (Figure 3.IV.4.7). In this orientation, the overpack begins its downward rotation with zero initial velocity. Towards the end of the tip-over, the overpack is horizontal with its downward velocity ranging from zero at the pivot point (point A) to a maximum at the farthest point of impact. The angular velocity at the instant of impact defines the downward velocity distribution along the contact line.

[

PROPRIETARY INFORMATION WITHHELD IN ACCORDANCE WITH 10CFR2.390

]

[

PROPRIETARY INFORMATION WITHHELD IN ACCORDANCE WITH 10CFR2.390

]

Table 3.IV.4.6, summarizes the maximum plastic strain results, along with the corresponding material failure stain. Further details pertaining this analysis are presented in [3.IV.15].

[

PROPRIETARY INFORMATION WITHHELD IN ACCORDANCE WITH 10CFR2.390

]

3.IV.4.3.5 Snow Load

The stress analysis of the overpack lid under snow load condition is performed using ANSYS [3.IV.9]. The finite element model used is essentially the same as shown in Figure 3.IV.4.1 apart from the loads and the boundary conditions. The normal snow pressure of 100 lb/ft2 is used per

Table 2.2.8 of the FSAR [3.IV.1]. The resulting stress distribution in the steel structure of the overpack lid under the applied snow load is shown in Figure 3.IV.4.26. The maximum stresses and the corresponding safety factors are summarized in Table 3.IV.4.8 per [3.IV.10]. For conservatism, the maximum primary stress in the lid is compared against the primary membrane and primary bending stress limits per Subsection NF (class 3 structures) of the ASME Code for Level A conditions. The allowable stresses are taken at bounding temperature, which exceeds the maximum operating temperature for the overpack top lid under normal operating conditions.

3.IV.4.3.6 Design Basis Earthquake

As noted in Table 2.IV.2.1, because the outer diameter (OD) and height of the CG of Version UVH cask are essentially identical to the reference cask analyzed in Chapter 3, the discussion in Section 3.4.7 per [3.IV.1] is applicable to Version UVH cask. Hence, no new analysis for the design basis earthquake is warranted.

3.IV.4.3.7 Cold

The value of the ambient temperature has two principal effects on the HI-STORM 100 Version UVH system, namely:

i. The steady-state temperature of all material points in the cask system will go up or down by the amount of change in the ambient temperature.

ii. As the ambient temperature drops, the absolute temperature of the contained helium will drop accordingly, producing a proportional reduction in the internal pressure in accordance with the Ideal Gas Law.

In other words, the temperature gradients in the system under steady-state conditions will remain the same regardless of the value of the ambient temperature. The internal pressure, on the other hand, will decline with the lowering of the ambient temperature. Since the stresses under normal storage condition arise principally from pressure and thermal gradients, it follows that the stress field in the MPC under the limiting cold ambient condition (–40 degree F) would be smaller than the "heat" condition of storage, treated in the preceding subsection. Additionally, the allowable stress limits tend to increase as the component temperatures decrease.

Therefore, the stress margins computed in the foregoing subsection can be conservatively assumed to apply to the "cold" condition as well.

Finally, as discussed below, the system is engineered to withstand “cold” temperatures (-40 degrees F) without impairment of its storage function.

Unlike the MPC, the HI-STORM storage overpack is subject to very low internal pressure as noted in Table 2.IV.2.3. Its stress field is unaffected by the ambient temperature, unless low temperatures produce brittle fracture due to the small stresses which develop from self-weight of the structure and from the minute difference in the thermal expansion coefficients in the constituent parts of the equipment (steel and concrete). To prevent brittle fracture, all structural steel material in the HI-STORM overpack is qualified by impact testing pursuant to the ASME Code.

The structural material used in the MPC (Alloy X) is recognized in the ASME Codes to be completely immune from brittle fracture.

The material property used to determine whether a flaw in the Metamic HT basket panel would propagate under the most adverse dynamic stress scenario is the Charpy impact strength, Cr.

Aluminum is among the small group of metals that maintains its impact strength under extreme cold conditions. The conservative crack propagation analysis, documented in [3.IV.2], shows that there exists large safety factor against crack propagation in the HI-STORM 100 Version UVH Metamic HT fuel baskets due to the non-mechanistic tipover event. Note that the maximum stress intensity (28.1 ksi) used in this conservative analysis is significantly higher than the stresses induced in the MPC-32M basket from the HI-STORM 100 Version UVH Tipover analysis. Since Metamic's fracture resistance at low temperatures remains robust in the manner of aluminum, brittle fracture under "cold" condition is not a credible failure mode for the Metamic HT fuel basket.

As no liquids are included in the HI-STORM storage overpack design, loads due to expansion of freezing liquids are not considered.

3.IV.5 Safety Conclusions

The structural analysis of the Version UVH storage cask under the loading condition unique to it, described in Section 3.IV.1, demonstrates that the stresses in all cask components, namely the buttressed base plate, the dual shell structure and the closure lid weldments are below the ASME Code limits with significant margins. The structural analysis of the HI-STORM 100 Version UVH closure lid demonstrates that the stresses in lid components are below the stress limits in ASME Code under all loading conditions. In addition, the MPC confinement boundary continues to satisfy the established acceptance criteria under temperature profiles unique to Version UVH Storage System under all loading conditions.

Therefore, the Version UVH overpack has been proven to meet all structural criteria applicable to the HI-STORM 100 Canister Storage System in this FSAR.

Table 3.IV.4.1: Factor-of-Safety for HI-STORM 100 Version UVH Lid under normal handling

Item	Calculated Value (ksi)	Allowable Limit (ksi)	Safety Factor
Lid Assembly – Primary Membrane Stress	3.34	16.6	4.97
Lid Assembly – Primary Membrane Plus Bending Stress	3.34	24.9	7.46
Base Lid Plate-to-Lid Outer Shell Weld – Shear Stress	0.65	15.5	24.0
Lid Rib II – Tear Stress	1.52	4.04	2.67
Lid Rib II – Bearing Stress	3.37	8.22	2.44

Table 3.IV.4.2: Safety Factors for normal design conditions (storage condition)

Stress Criteria	Calculated Stress, σ (psi)	Allowable stress, S (psi)	Safety factor, SF=S/s
HI-STORM Base Plate			
Primary Membrane	*1172.4	16,600	14.16
Primary Membrane + Bending	1172.4	24,900	21.24
Primary Membrane + Bending + Thermal: (Secondary)	27860	54,800	1.97
HI-STORM Inner Shell			
Primary Membrane	*1678	16,600	9.89
Primary Membrane + Bending	1678	24,900	14.84
Primary Membrane + Bending + Thermal: (Secondary)	43488	54,800	1.26
HI-STORM Outer Shell			
Primary Membrane	*2767.2	16,600	6.00
Primary Membrane + Bending	2767.2	24,900	9.00
Primary Membrane + Bending + Thermal: (Secondary)	36970	54,800	1.48
MPC Base Plate			
Primary Membrane	*10994	15,600	1.42
Primary Membrane + Bending	10994	23,400	2.13
Primary Membrane + Bending + Thermal: (Secondary)	16280	46,800	2.87
MPC Shell			
Primary Membrane	*10779	15,600	1.45
Primary Membrane + Bending	10779	23,400	2.17
Primary Membrane + Bending + Thermal: (Secondary)	21355	46,800	2.19
MPC Lid			
Primary Membrane	*5180	15,600	3.01
Primary Membrane + Bending	5180	23,400	4.52
Primary Membrane + Bending + Thermal: (Secondary)	9715.4	46,800	4.82

*-Conservatively, the primary membrane stress includes the bending stress

Table 3.IV.4.3: Safety Factors for accidental conditions (storage condition)

Stress Criteria	Calculated Stress, σ (psi)	Allowable stress, S (psi)	Safety factor, SF=S/s
HI-STORM Base Plate			
Primary Membrane	*6161.1	18,000	2.92
Primary Membrane + Bending	6161.1	27,000	4.38
HI-STORM Inner Shell			
Primary Membrane	*2579.5	18,000	6.98
Primary Membrane + Bending	2579.5	27,000	10.47
HI-STORM Outer Shell			
Primary Membrane	*4451	18,000	4.04
Primary Membrane + Bending	4451	27,000	6.07
MPC Base Plate			
Primary Membrane	*27644	36,480	1.32
Primary Membrane + Bending	27644	54,720	1.98
MPC Shell			
Primary Membrane	*26465	36,480	1.38
Primary Membrane + Bending	26465	54,720	2.07
MPC Lid			
Primary Membrane	*10152	36,480	3.59
Primary Membrane + Bending	10152	54,720	5.39

*-Conservatively, the primary membrane stress includes the bending stress

Table 3.IV.4.4: Safety Factors for Stability Analysis of HI-STORM under Tornado Missile impact

Load Case	Horizontal Displacement	Angular Rotation	Allowable Horizontal Displacement	Allowable Angular Rotation	Safety Factor for Horizontal Displacement	Safety Factor for Angular Rotation
Missile impact plus pressure drop	0.536	2.91	5.5	29.095	5.43	10
Missile impact plus tornado wind	0.706	3.82	5.5	29.095	5.41	7.62

Table 3.IV.4.5: Safety Factors for Stability of Containment shell under external pressure due to explosion

Component	Nature of Buckling	Stress category	Interaction Factor (IF)	Safety Factor, SF = 1/IF
Containment Shell	Elastic	Axial Compression plus Hoop Compression	0.958	1.04
		Hoop Compression plus Shear	0.942	1.06
	In-Elastic	Axial Compression plus Shear	0.119	8.40
		Hoop Compression plus Shear	0.942	1.06

Table 3.IV.4.6: Maximum Local True Plastic Strain Results (MPC-32M)

[

PROPRIETARY INFORMATION WITHHELD IN ACCORDANCE WITH 10CFR2.390

]

Table 3.IV.4.7: Maximum Local True Plastic Strain Results (MPC-68M)

[

PROPRIETARY INFORMATION WITHHELD IN ACCORDANCE WITH 10CFR2.390

]

Table 3.IV.4.8: Factor-of-Safety for HI-STORM 100 Version UVH Lid under snow load

Item	Calculated Value (ksi)	Allowable Limit (ksi)	Safety Factor
Lid Assembly – Primary Membrane Stress	9.62	16.6	1.73
Lid Assembly – Primary Membrane Plus Bending Stress	9.62	24.9	2.59

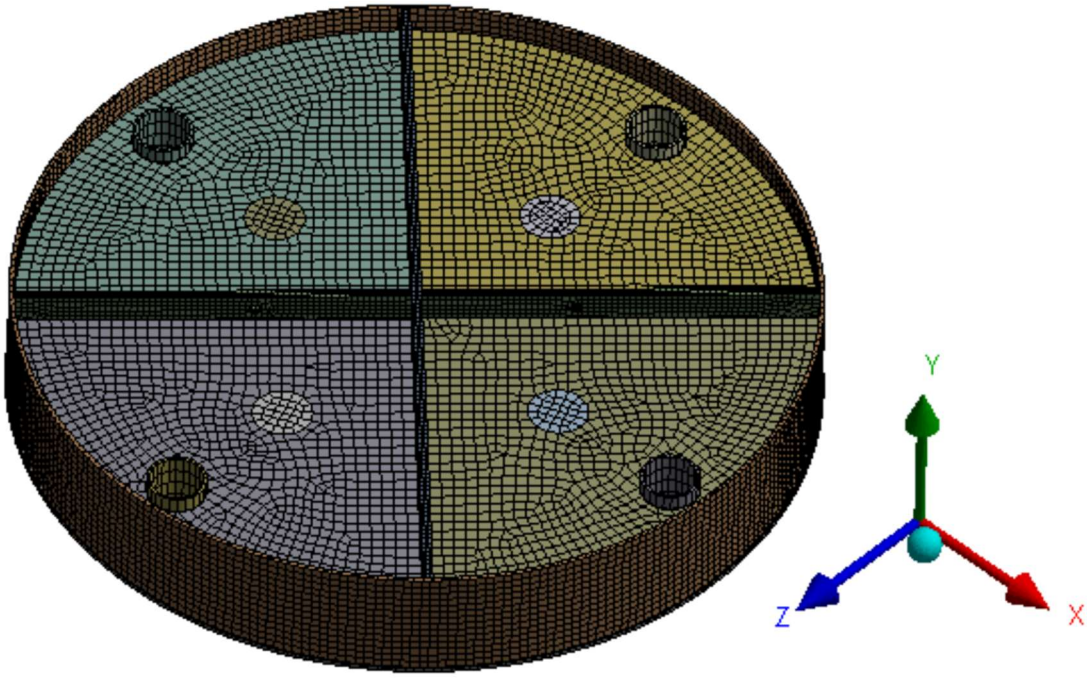

Figure 3.IV.4.1: ANSYS Model of HI-STORM 100 Version UVH Lid – Normal Handling

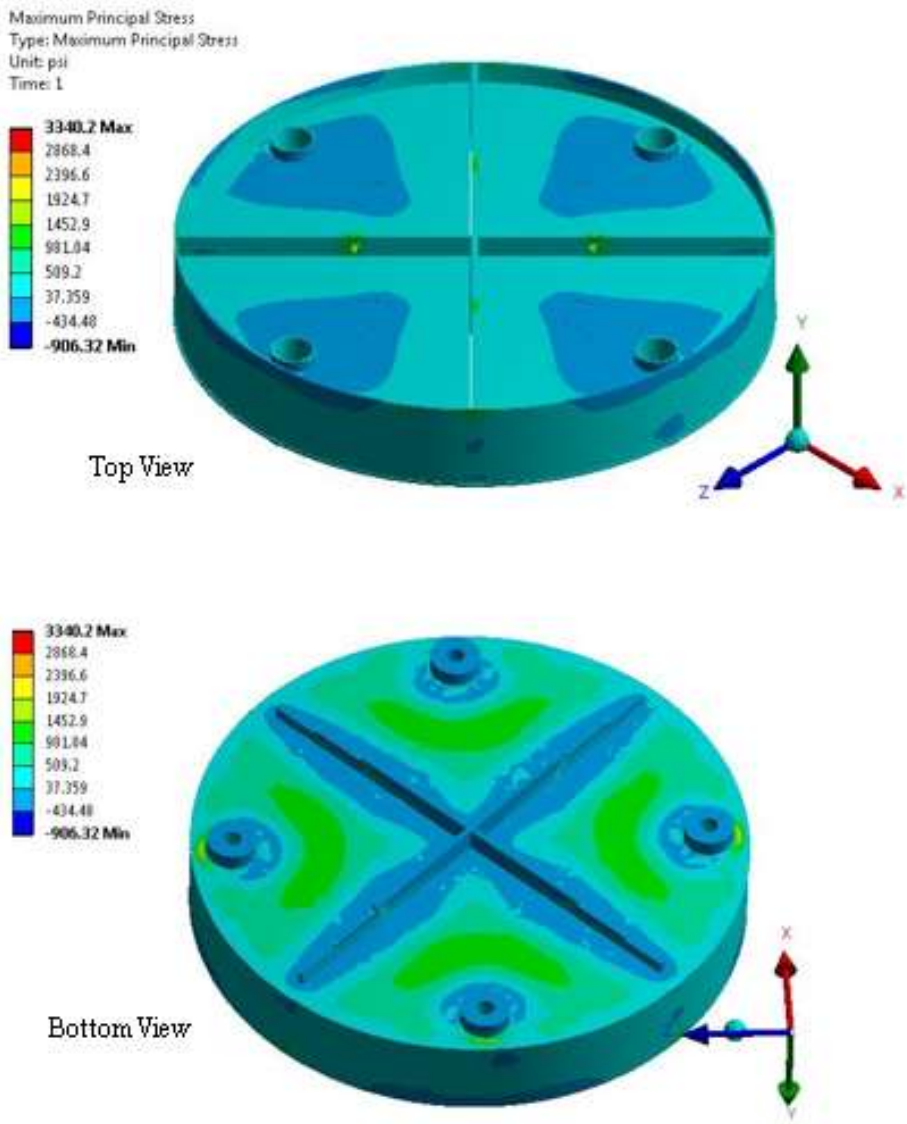

Figure 3.IV.4.2: Stress Distribution in HI-STORM 100 UVH Lid – Normal Handling

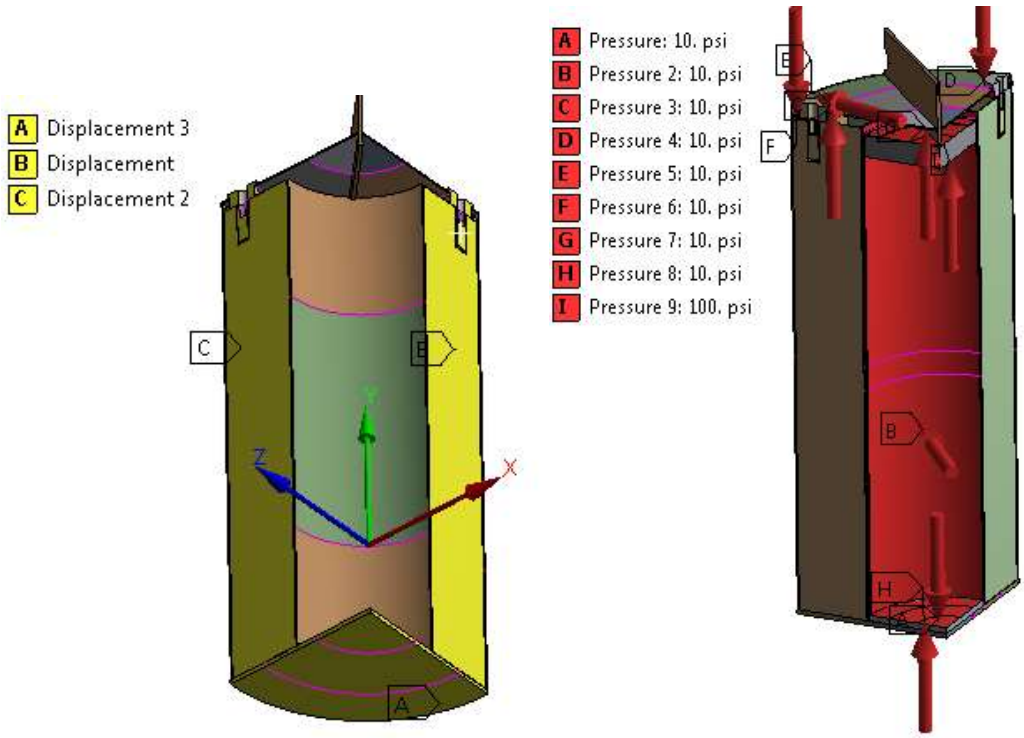

Figure 3.IV.4.3: Design Basis Internal Pressure at Internal Cavities and Boundary Conditions

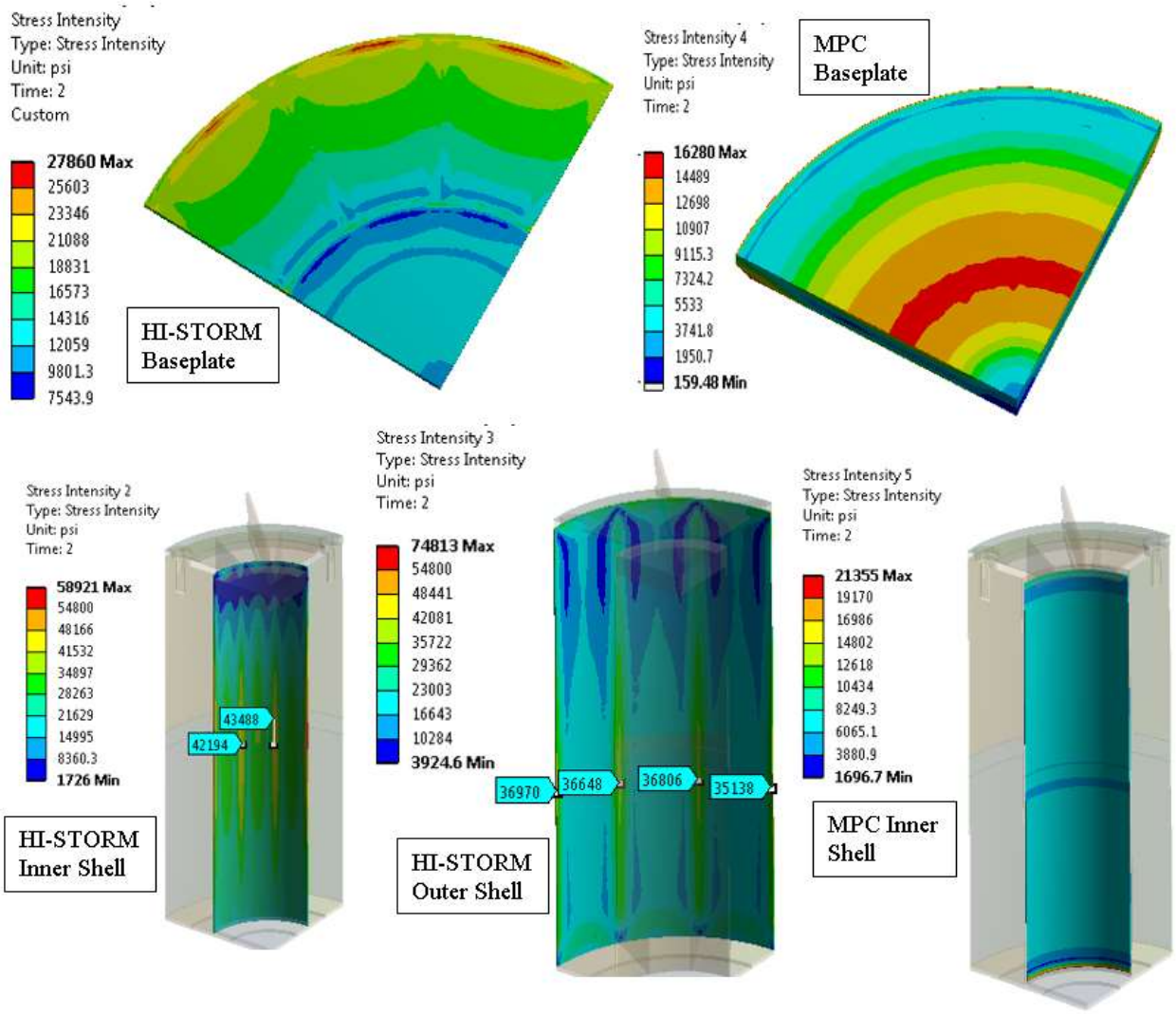

Figure 3.IV.4.4: Stress Distribution in HI-STORM 100 Version UVH Overpack – Normal Handling, (Singular Stress at the corner is ignored)

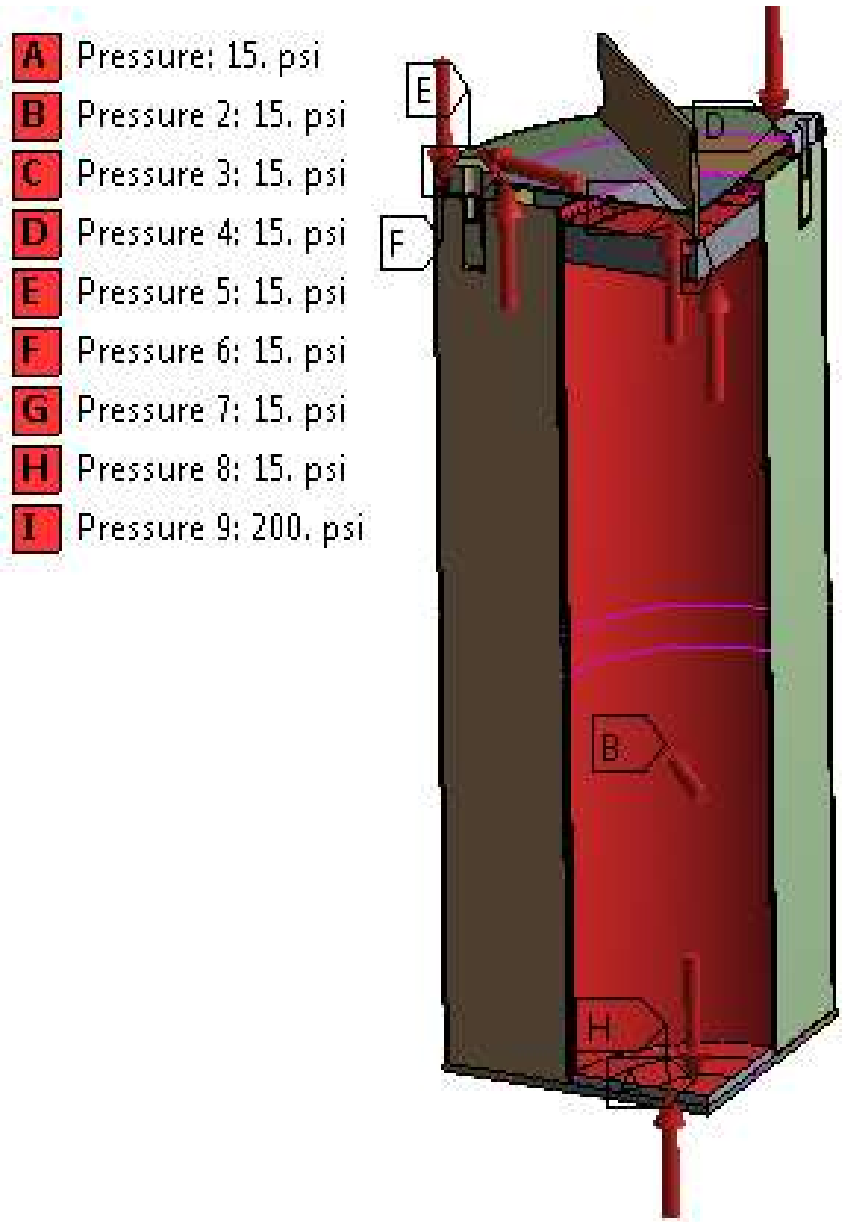

Figure 3.IV.4.5: Accident Condition Internal Pressure at Internal Cavities

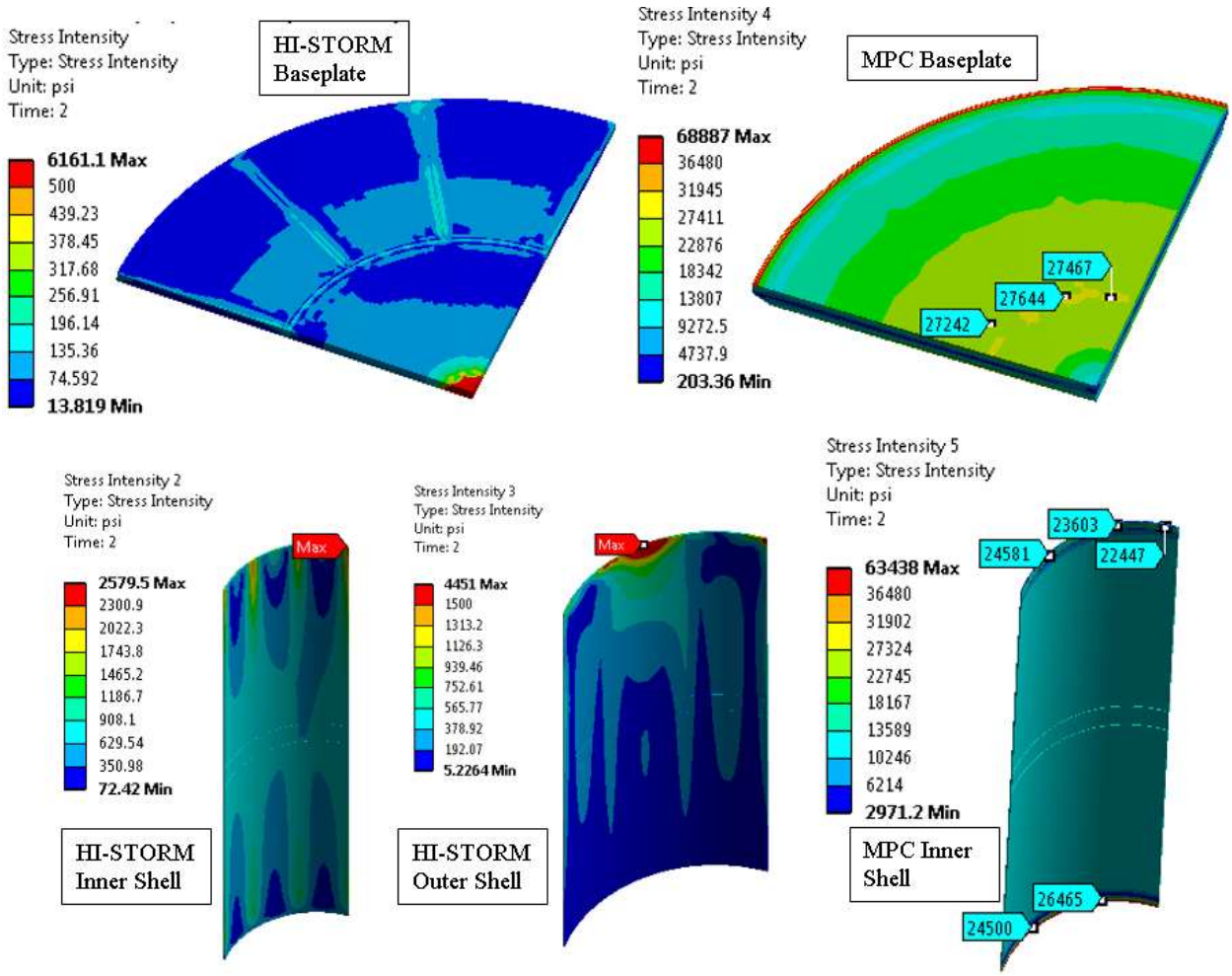

Figure 3.IV.4.6: Stress Distribution in HI-STORM 100 Version UVH Overpack – Accident Condition, (Singular Stress at the corner is ignored)

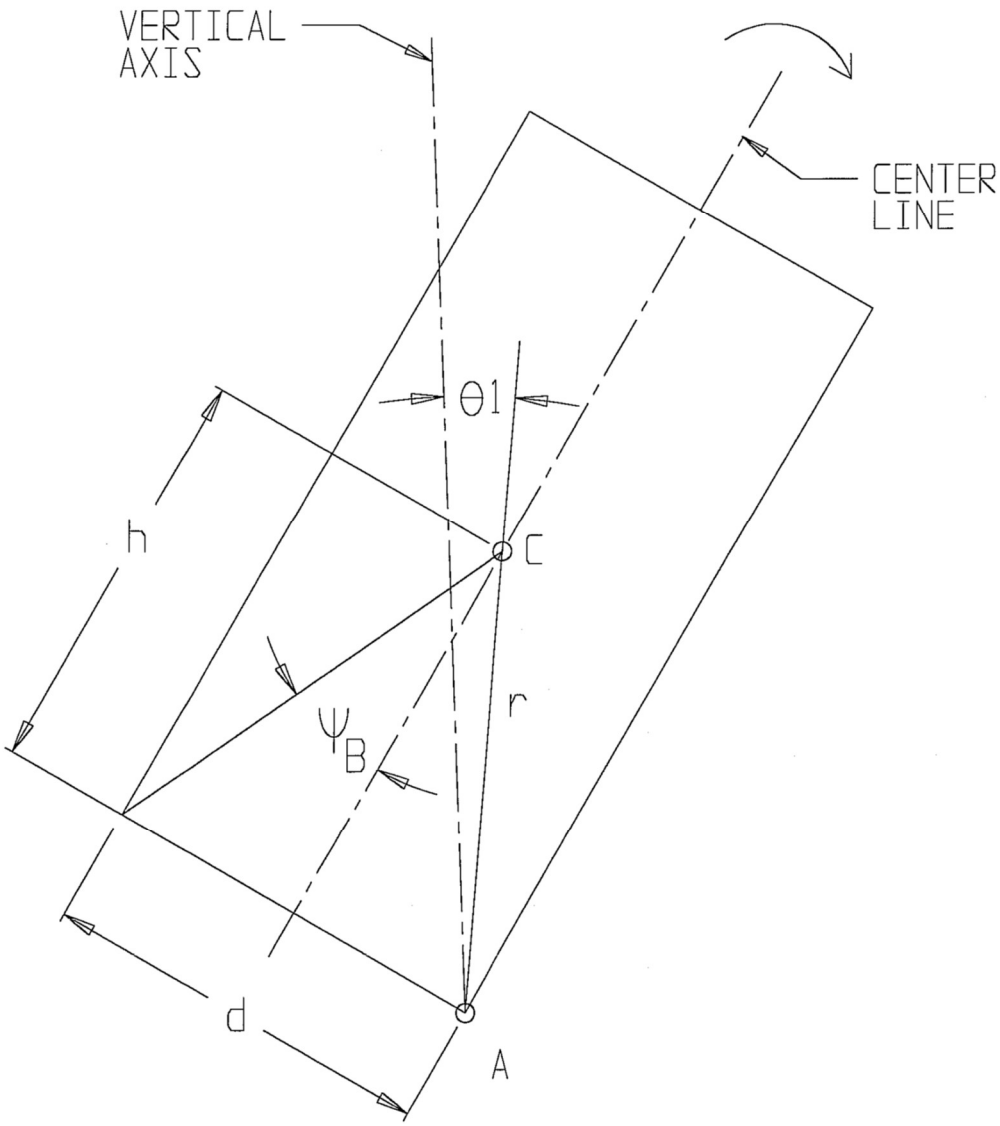

Figure 3.IV.4.7: Non-mechanistic tip-over

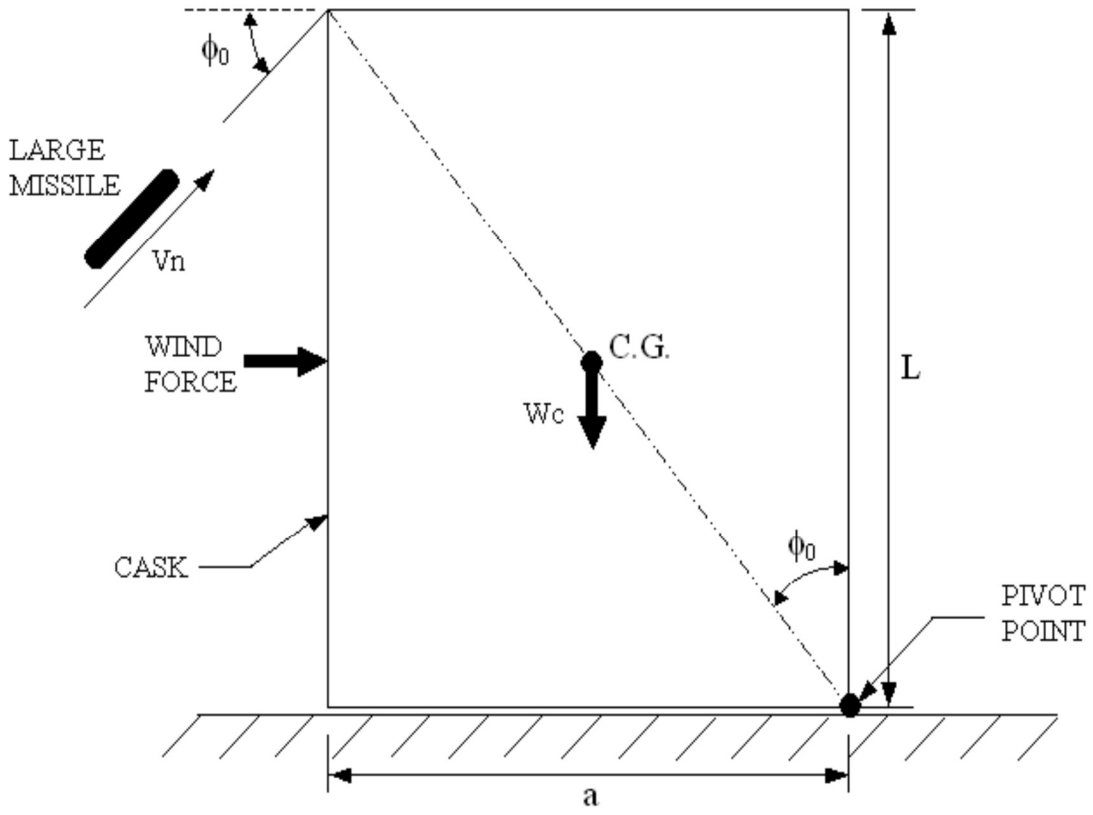

Figure 3.IV.4.8: Cask subject to combined effect of high wind and large missile impact

[

PROPRIETARY INFORMATION WITHHELD IN ACCORDANCE WITH 10CFR2.390

]

Figure 3.IV.4.9: LS-DYNA Tipover Model – HI-STORM Loaded with MPC

[

PROPRIETARY INFORMATION WITHHELD IN ACCORDANCE WITH 10CFR2.390

]

Figure 3.IV.4.10: LS-DYNA Model – HI-STORM for MPC

[

PROPRIETARY INFORMATION WITHHELD IN ACCORDANCE WITH 10CFR2.390

]

Figure 3.IV.4.11: LS-DYNA Model – MPC Enclosure Vessel

[

PROPRIETARY INFORMATION WITHHELD IN ACCORDANCE WITH 10CFR2.390

]

Figure 3.IV.4.12: LS-DYNA Model – MPC 32M Fuel Basket (note: the different colors represent regions with bounding temperatures of 350°C, 325°C, 300°C and 275°C, respectively)

[

PROPRIETARY INFORMATION WITHHELD IN ACCORDANCE WITH 10CFR2.390

]

Figure 3.IV.4.13: LS-DYNA Model – PWR Fuel Assemblies

[

PROPRIETARY INFORMATION WITHHELD IN ACCORDANCE WITH 10CFR2.390

]

Figure 3.IV.4.14: LS-DYNA Model – MPC 32M Fuel Basket Shims

[

PROPRIETARY INFORMATION WITHHELD IN ACCORDANCE WITH 10CFR2.390

]

Figure 3.IV.4.15: Maximum Plastic Strain – MPC 32M Fuel Basket

[

PROPRIETARY INFORMATION WITHHELD IN ACCORDANCE WITH 10CFR2.390

]

Figure 3.IV.4.16: Maximum Plastic Strain – MPC Enclosure Vessel

[

PROPRIETARY INFORMATION WITHHELD IN ACCORDANCE WITH 10CFR2.390

]

Figure 3.IV.4.17: Maximum Plastic Strain – HI-STORM Overpack (Excluding Concrete)

[

PROPRIETARY INFORMATION WITHHELD IN ACCORDANCE WITH 10CFR2.390

]

Figure 3.IV.4.18: Maximum Plastic Strain – HI-STORM Overpack Closure Lid Bolts

[

PROPRIETARY INFORMATION WITHHELD IN ACCORDANCE WITH 10CFR2.390

]

Figure 3.IV.4.19: Maximum Plastic Strain – HI-STORM Overpack Lid
(lid is not be dislodged, and primary strains are within the failure limit of the material)

[

PROPRIETARY INFORMATION WITHHELD IN ACCORDANCE WITH 10CFR2.390

]

Figure 3.IV.4.20: Vertical Rigid Body Deceleration Time History – Fuel assemblies (Top of Fuel)

[

PROPRIETARY INFORMATION WITHHELD IN ACCORDANCE WITH 10CFR2.390

]

Figure 3.IV.4.21: Finite element model of MPC-68M with Orientation No. 1

[

PROPRIETARY INFORMATION WITHHELD IN ACCORDANCE WITH 10CFR2.390

]

Figure 3.IV.4.22: Finite element model of MPC-68M with Orientation No. 2

[

PROPRIETARY INFORMATION WITHHELD IN ACCORDANCE WITH 10CFR2.390

]

Figure 3.IV.4.23: Deceleration of the SFA (Orientation No. 1)

[

PROPRIETARY INFORMATION WITHHELD IN ACCORDANCE WITH 10CFR2.390

]

Figure 3.IV.4.24: Plastic Strain in MPC-68M Basket (Orientation No. 1)

[

PROPRIETARY INFORMATION WITHHELD IN ACCORDANCE WITH 10CFR2.390

]

Figure 3.IV.4.25: Plastic Strain in MPC-68M Basket (Orientation No. 1)

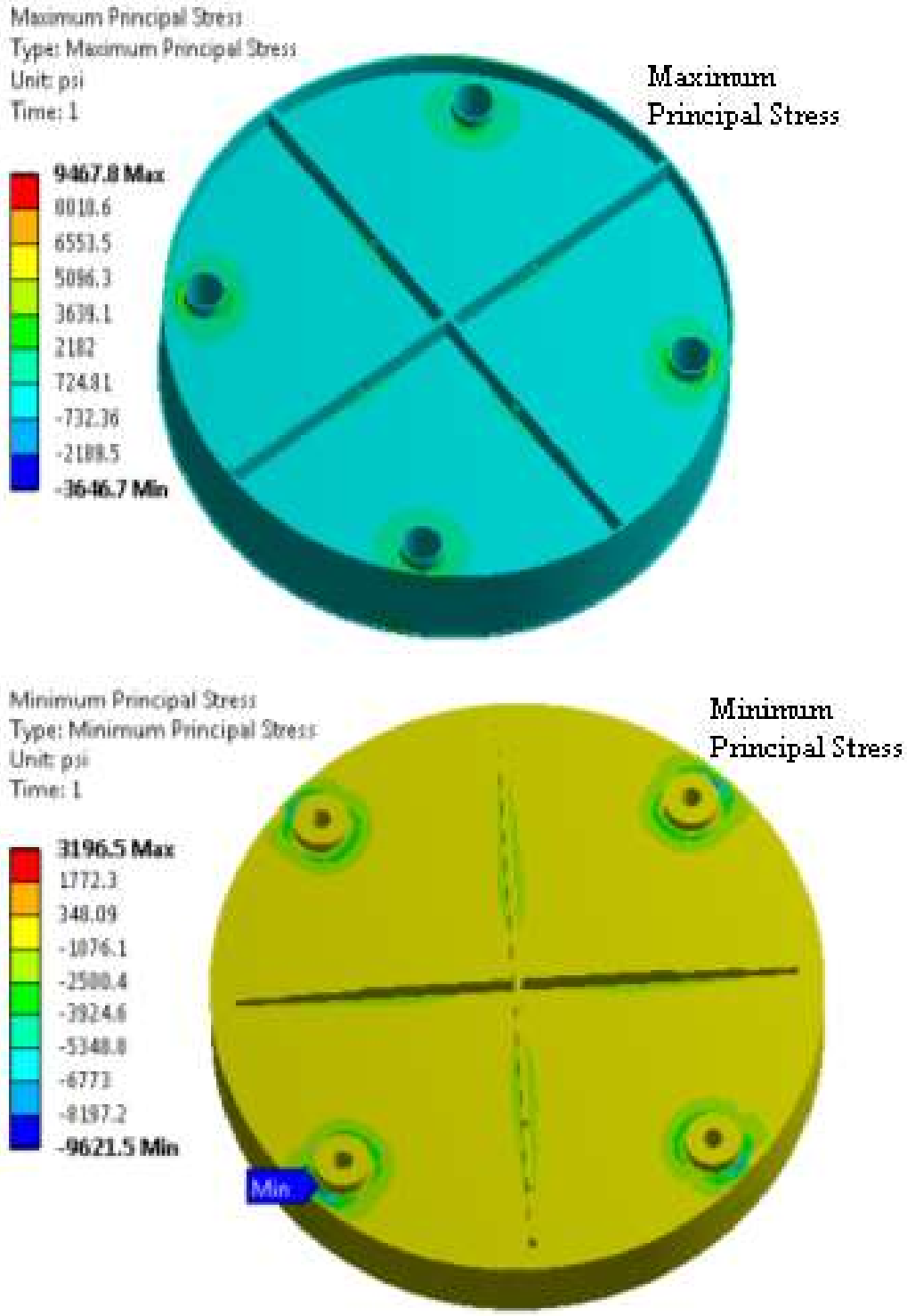

Figure 3.IV.4.26: Principal Stress in HI-STORM 100 Version UVH Lid under snow load

3.IV.6 References

[3.IV.1] HI-STORM 100 FSAR, Holtec Report No.2002444, latest Revision.

[3.IV.2] HI-STORM FW FSAR, Holtec Report No.2114830, latest Revision.

[3.IV.3] NUREG-0612, "Control of Heavy Loads at Nuclear Power Plants," United States Nuclear Regulatory Commission.

[3.IV.4] Regulatory Guide 3.61 (Task CE306-4) “Standard Format for a Topical Safety Analysis Report for a Spent Fuel Storage Cask”, USNRC, February 1989.

[3.IV.5] ASME Boiler & Pressure Vessel Code, Section III, Sub-section NB, 1995 Edition with addenda up to and including 2010.

[3.IV.6] ASME Boiler & Pressure Vessel Code, Section III, Sub-section NF, 1995 Edition with addenda up to and including 2010.

[3.IV.7] Crane Manufacturer's Association of America (CMAA), Specification#70, 1988, Section 3.3.

[3.IV.8] “Structural Calculation Package for HI-STORM Overpack”, Holtec Report No. HI-2012769, Revision 18.

[3.IV.9] ANSYS 17.1, ANSYS, Inc., 2016.

[3.IV.10] “Structural Calculation Package for HI-STORM 100 Version UVH Storage Cask”, Holtec Report No. HI-2210241, Revision 0.

[3.IV.11] Bechtel Topical Report BC-TOP-9A, “Design of Structures for Missile Impact,” Revision 2 (September 1974).

[3.IV.12] 10CFR71, Waste Confidence Decision Review, USNRC, September 11, 1990.

[3.IV.13] LS-DYNA, Version 971, Livermore Software Technology, 2006.

[3.IV.14] Witte, M., et al., "Evaluation of Low-Velocity Impacts Tests of Solid Steel Billet onto Concrete Pads, and Application to Generic ISFSI Storage Cask for Tipover and Side Drop," Lawrence Livermore National Laboratory, UCRL-ID-126295, Livermore, California, March 1997.

[3.IV.15] “Analysis of the Non-Mechanistic Tipover Event of the Loaded HI-STORM 100 Version UVH Storage Cask”, Holtec Report No. HI-2210290, Revision 0.

SUPPLEMENT 4.IV: THERMAL EVALUATION OF HI-STORM 100 UVH SYSTEM

4.IV.0 OVERVIEW

The thermal compliance of the HI-STORM 100 Version UVH system to the ISG-11 Rev 3[4.1.4] and other limits specified in Supplement 2.IV is established in this supplement. As described in Supplement 1.IV, Version UVH is an unventilated variant of the HI-STORM 100 overpack. The thermal acceptance criteria provide specific limits on the maximum cladding temperature of the stored commercial spent fuel (CSF) and the integrity of the MPC confinement space under all operating scenarios. Specifically, the requirements are:

i. The fuel cladding temperature must meet the temperature limit under normal, off-normal, and accident conditions appropriate to its burnup level and condition of storage or handling set forth in Table 4.3.1[1].

ii. The maximum internal pressure of the MPC and the air annulus should remain within their design pressures for normal, short-term, off-normal, and accident conditions set forth in Table 2.IV.2.3.

iii. The temperatures of the cask materials shall remain below their allowable limits set forth in Table 2.IV.2.4 under all scenarios.

The analyses consider passive rejection of decay heat from the stored SNF assemblies to the environment under normal, off-normal, and accident conditions of storage. Effects of incident solar radiation (insolation) and partial radiation blockage due to the presence of neighboring casks at an ISFSI site are included in the analyses.

The safety evaluations of the storage system loaded with MPC-32M and MPC-68M canisters (already evaluated for storage in ventilated systems in Supplements 4.II and 4.III respectively) are carried out using the QA validated Code, ANSYS Fluent [4.IV.1.2] (which has been widely used in thermal safety analyses in Holtec dockets, including all analyses documented in Chapter 4, Supplement 4.II and Supplement 4.III of this FSAR). The analyses employ a set of conservative assumptions that seek to overstate the computed temperatures and pressures.

[1] All table references without a Roman numeral in the second place indicate that they are in the main SAR (i.e., not in a supplement)

4.IV.1 DISCUSSION

[

PROPRIETARY INFORMATION WITHHELD IN ACCORDANCE WITH 10CFR2.390

]

4.IV.1.1 Allowable Heat Load Patterns

The heat load distribution within the MPC basket cell has the most pronounced effect on the peak fuel cladding temperature. Because individual fuel batches for fuel loading have different composition of specific heat loads, it is important to provide flexibility in the heat load pattern such that one CoC covers as many batches as possible. To that end, the approach of multi-region storage is generalized using the following strategy coupled with bounding pattern evaluations.

[

PROPRIETARY INFORMATION WITHHELD IN ACCORDANCE WITH 10CFR2.390

]

The approach outlined above can thus be adopted to develop optimal allowable heat load patterns. The validity of the above generalized multi-region storage strategy within the confines of the above rules is demonstrated by parametric analyses for the bounding patterns at design basis MPC heat load. Detailed methodology used to identify these bounding heat load patterns are given in Section 4.IV.1.3.

4.IV.1.2 Fuel-length Dependent Allowance of Heat Loads for MPC-32M

The licensing basis evaluations in this supplement are performed for the reference length canister for the reference PWR fuel (Westinghouse 17x17). Similar to the HI-STORM 100 Version E system (Section 4.II.3.5) and HI-STORM FW system [4.IV.1.1], the height of the HI-STORM 100 Version UVH overpack can also be customized to accord with the site-specific requirements. [

PROPRIETARY INFORMATION WITHHELD IN ACCORDANCE WITH 10CFR2.390

]

The above approach is consistent with that outlined in Section 4.II.3.5 and provides a conservative method to adjust the allowable heat load without the need for a CoC amendment for each site.

4.IV.1.3 Identification of Heat Load Patterns for Bounding Analyses

To demonstrate the validity of the generalized multi-region storage strategy described in the preceding section, evaluations are performed to identify the bounding patterns for the design basis heat load. [

PROPRIETARY INFORMATION WITHHELD IN ACCORDANCE WITH 10CFR2.390

]
Following the above principles and ruleset in Section 4.IV.1.1, several limiting patterns are identified for MPC-32M and MPC-68M baskets. Therefore, following this strategy, several regionalized patterns for MPC-32M and MPC-68M are identified and evaluated using 3-D Computational Fluid Dynamics (CFD) models (Section 4.IV.4.2).

4.IV.1.4 Backfill Pressure Limits

The minimum and maximum initial helium backfill pressures for MPCs stored in Version UVH system are listed in Table 4.IV.1.3. The annular gap between the MPC and the Version UVH overpack is air-backfilled to atmospheric conditions such that the operating pressure under normal long-term storage conditions is within the limits set forth in Supplement 2.IV. The initial backfill pressure for HI-STORM annulus air is listed in Table 4.IV.1.3.

TABLE 4.IV.1.1

MAXIMUM AGGREGATE HEAT LOADS FOR HI-STORM VERSION UVH

MPC Type (Fuel Type)	Maximum Aggregate Heat Load
MPC-32M (PWR)	25 kW
MPC-68M (BWR)	25 kW

TABLE 4.IV.1.2

STANDARD ACTIVE FUEL LENGTHS USED IN THE THERMAL ANALYSES FOR PWR AND BWR FUELS

MPC Type (Fuel Type)	Active Fuel Length (in)
MPC-32M (PWR)	144
MPC-68M (BWR)	150

Table 4.IV.1.3

INITIAL BACKFILL PRESSURE FOR MPC HELIUM AND ANNULUS AIR

Condition	MPC Helium Backfill Pressure Limits (psig)	Annulus Air Fill Pressure Limits (psig)
MPC-32M	Minimum: 40 Maximum: 43	0 Note-2
MPC-68M	Minimum: 42 Maximum: 45	
Note-1: Initial backfill pressures of helium is specified at a reference temperature of 70°F (21°C). Note-2: Annulus is backfilled to atmospheric conditions.		

4.IV.2 THERMAL PROPERTIES OF MATERIALS

The HI-STORM 100 UVH overpack and lid are constructed using high density concrete. Appendix 1.D of this FSAR provides the material properties of the high-density concrete. All other materials used in the Version UVH are same as that described in Section 4.2 of this FSAR and corresponding material properties are provided therein.

4.IV.3 SPECIFICATIONS FOR COMPONENTS

The applicable material temperature limits and design pressures for the HI-STORM 100 Version UVH system is provided in Supplement 2.IV.

4.IV.4 THERMAL EVALUATION OF NORMAL CONDITIONS OF STORAGE

Thermal analyses to demonstrate the safety of long-term storage of MPC-32M and MPC-68M in the HI-STORM Version UVH overpack is presented in this section.

4.IV.4.1 Thermal Model

The Storage system consists of the MPC standing upright on the cask's baseplate and the surrounding cask made of steel and plain concrete. The MPC and SNF thermal model is identical to that described in Supplements 4.II and 4.III of this FSAR. [

PROPRIETARY INFORMATION WITHHELD IN ACCORDANCE WITH 10CFR2.390

]

4.IV.4.1.1 Effect of Neighboring Casks

HI-STORM casks are typically stored on an ISFSI pad in regularly spaced arrays. Relative to an isolated HI-STORM, cask the heat dissipation from a HI-STORM UVH cask placed in an array is somewhat disadvantaged. [

PROPRIETARY INFORMATION WITHHELD IN ACCORDANCE WITH 10CFR2.390

]
The final 3-D CFD model thus obtained is used to determine the component temperatures and pressures.

Site-specific evaluations shall be performed for any other array size, using the same methodology presented in this section. The computed temperatures and pressures shall meet the respective limits specified in Chapter 2 of this FSAR.

4.IV.4.2 Limiting MPC Configurations

Screening calculations are performed for various loading patterns for MPC-32M and MPC-68M in an isolated HI-STORM Version UVH cask. These patterns are derived following the rules specified in Section 4.IV.1.1 and following the principles identified in Subsection 4.IV.1.3. Several patterns are generated and evaluated for both MPC-32M and MPC-68M canister in the companion report [4.IV.4.1]. The results from the most-bounding heat load patterns for each of the MPC is presented in Table 4.IV.1. Based on the results, the bounding configuration, i.e. the MPC-32M in HI-STORM 100 Version UVH is adopted for all licensing basis evaluations.

4.IV.4.3 Test Model

The rationale for not requiring an experimental test model provided in Section 4.4.3 remains applicable in its entirety.

4.IV.4.4 Normal Condition of Storage

The steady state thermal analysis to determine compliance with the temperature limits corresponding to the normal condition of storage consists of several discrete analyses, namely:

i. Storage system containing Version UVH overpack and standard length MPC-32M (PWR canister).

ii. Storage system containing Version UVH overpack and standard length MPC-68M (BWR canister).

iii. Storage of HI-STORM Version UVH casks in an array with the bounding MPC (from above scenarios).

Thermal evaluations of scenarios (i) and (ii) are presented in Section 4.IV.2. The thermal performance of the unventilated HI-STORM 100 Version UVH overpack is affected by the presence of neighboring casks when placed in a cask array. Therefore, scenario (iii) above is adopted as the governing long-term storage scenario as it yields the highest fuel cladding and component temperatures.

4.IV.4.4.1 Maximum Temperatures and Pressure

As evaluated in Section 4.IV.4.2 MPC-32M under the bounding heat load pattern is adopted for licensing basis evaluations. The impact of neighboring casks (long-term storage) is evaluated using nominal array parameters provided in Table 1.IV.4.1.

The computed results are presented in Tables 4.IV.4.3 and 4.IV.4.4. The evaluations show that the maximum temperatures and operating pressures are below the design limits set forth in Supplement 2.IV.

4.IV.4.4.2 Minimum Temperatures

In Supplement 2.IV, the minimum ambient temperature condition for the Version UVH storage overpack and MPC is specified to be -40°F [PROPRIETARY INFORMATION WITHHELD IN ACCORDANCE WITH 10CFR2.390] Low service temperature (-40ºF) operation of the MPC-32M fuel basket, MPC-68M fuel basket and the HI-STORM 100 Version UVH overpack are addressed in Subsection 3.IV.4.3.7. The low service temperature operation of MPC enclosure vessels are addressed in Chapter 3 of this FSAR. All HI-STORM 100 Version UVH storage overpack and MPC materials of construction will satisfactorily perform their intended function in the storage mode under this minimum temperature condition.

4.IV.4.5 Engineered Clearances to Eliminate Thermal Interferences

To minimize thermal stresses in load bearing members, the HI-STORM 100 Version UVH system is engineered with adequate internal gaps to permit free thermal expansion of the fuel basket and MPC in axial and radial directions. In this subsection, differential thermal expansion calculations are performed to demonstrate that engineered gaps in the HI-STORM 100 Version UVH System are adequate to accommodate thermal expansion of the fuel basket and MPC.

The HI-STORM 100 Version UVH System is engineered with gaps for the fuel basket and MPC to expand thermally without restraint of free end expansion. The following gaps are evaluated:

a. Fuel Basket-to-MPC Radial Gap
b. Fuel Basket-to-MPC Axial Gap
c. MPC-to-Overpack Radial Gap
d. MPC-to-Overpack Axial Gap

The FLUENT [4.IV.1.2] thermal model provides the 3-D temperature field in the HI-STORM 100 Version UVH system from which the differential thermal expansions are computed following the same methodology outlined in Supplements 4.II and 4.III of this FSAR. Detailed description of the calculations is documented in the companion thermal report [4.IV.4.1].

Table 4.IV.4.5 provides the initial minimum gaps and their corresponding value during long-term storage conditions under MPC-32M storage. As can be seen, there is no risk of restraint to free-end expansion in the storage system.

4.IV.4.6 Storage of Damaged Fuel Assemblies and Fuel Debris

Storage of damaged fuel (in DFIs/DFCs) and fuel debris (in DFCs only) is permitted in the HI-STORM 100 Version UVH system subject to the location and heat load specified in Supplement 2.IV. As illustrated in Sections 4.II.4 and 4.III.4, storage of DFCs/DFIs have a small impact on the computed temperatures and pressures when placed in locations same as that specified in Supplement 2.IV. Moreover, heat load reduction in storage cell with DFCs/DFIs compared to that with an intact fuel assembly in that same location is also the same as that specified in Supplement 2.IV. Therefore, the storage of DFIs/DFCs in HI-STORM 100UVH system is bounded by the evaluations presented in Sections 4.II.4 and 4.III.4 for MPC-32M and MPC-68M respectively.

4.IV.4.7 Results & Safety Conclusions

The component temperatures and MPC cavity pressure for the bounding scenario are summarized in Tables 4.IV.4.3 and 4.IV.4.4. It can be concluded from the results that under the licensing-basis heat load patterns:

i. The storage system containing the Version UVH satisfies the ISG-11 Rev. 3 fuel cladding and other temperature limits set down in this FSAR.

ii. The pressure inside the MPC is below the design-basis limit set forth in Supplement 2. IV.

iii. The pressure in the annular space between the MPC and the overpack is below the design limit set forth in Supplement 2. IV.

Table 4.IV.4.1
BOUNDING HEAT LOAD PATTERN MAXIMUM TEMPERATURES IN
HI-STORM 100 VERSION UVH (ISOLATED CASK)

Component	**MPC-32M** Note 1	**MPC-68M**
Peak Cladding Temperature ºC (ºF)	358 (676)	339 (642)
Note 1: MPC-32M with the bounding heat load pattern (Pattern-0 i.e. uniform pattern) is adopted for all the subsequent licensing basis evaluations.		

Table 4.IV.4.2

PARAMETERS FOR CASK ARRAY EVALUATIONS

Parameter	Value
Array Configuration	2 x N, square array
Array Pitch	Table 1.IV.4.1

Table 4.IV.4.3
BOUNDING HEAT LOAD PATTERN MAXIMUM TEMPERATURES IN HI-STORM 100 VERSION UVH UNDER LONG TERM STORAGE (CASK ARRAY CONFIGURATION)

[

PROPRIETARY INFORMATION WITHHELD IN ACCORDANCE WITH 10CFR2.390

]

Table 4.IV.4.4

SUMMARY OF BOUNDING MPC CAVITY AND HI-STORM UVH ANNULUS PRESSURES UNDER LONG-TERM (CASK ARRAY CONFIGURATION)

[

PROPRIETARY INFORMATION WITHHELD IN ACCORDANCE WITH 10CFR2.390

]

TABLE 4.IV.4.5

SUMMARY OF HI-STORM 100 DIFFERENTIAL THERMAL EXPANSIONS FOR MPC-32M FOR THE GOVERNING HEAT LOAD CASE

[

PROPRIETARY INFORMATION WITHHELD IN ACCORDANCE WITH 10CFR2.390

]

[

PROPRIETARY INFORMATION WITHHELD IN ACCORDANCE WITH 10CFR2.390

]

4.IV.5 Thermal Evaluation for Short Term Operations

As discussed in Section 4.5 of this FSAR, short-term operations use the HI-TRAC transfer cask.

The following discrete thermal scenarios are identified as part of these short-term operations:

i. Post-Loading Wet Transfer Operations
ii. MPC Cavity Vacuum Drying
iii. Normal Onsite Transport in a Vertical Orientation
iv. MPC Cooldown and Reflood for Unloading Operations

Since the maximum heat loads qualified for MPC-32M and MPC-68M in Version UVH system are significantly lower than those qualified for use in the standard HI-STORM 100 version, no separate evaluations are needed for MPCs qualified for Version UVH. Thermal evaluations presented in Supplements 4.II and 4.III of the main FSAR are bounding for i, iii and iv identified above. However, explicit evaluations are performed in the subsequent section for the vacuum drying operations for MPCs loaded under the generalized loading strategy described in Section 4.IV.2.1.

4.IV.5.1 Vacuum Drying

Vacuum drying evaluation for High Burn-up Fuel in MPC-32M and MPC-68M at their respective threshold heat loads are presented in Sections 4.II.5.3 and 4.III.5.3.1 of this FSAR respectively. The threshold heat loads defined for each MPCs in the respective sections are higher than the maximum aggregate heat loads permitted for storage under the Generalized Multi-Region strategy described in Section 4.IV.1.1. Further confirmatory evaluations presented in the companion thermal report [4.IV.4.1] demonstrate that the regionalized patterns developed from Pattern 0 (defined in Section 4.IV.1.1) are also bounded by the computed temperatures for threshold heat load evaluations presented in Supplements 4.II and 4.III. Therefore, HBFs loaded under the GMR strategy can be dried using vacuum drying approach.

4.IV.6 OFF-NORMAL AND ACCIDENT EVENTS

4.IV.6.1 Off-Normal Conditions

4.IV.6.1.1 Off-Normal Ambient Temperature

The most bounding fuel temperatures for Version UVH with MPC-32M and MPC-68M are bounded by the corresponding MPC-32M and MPC-68M in HI-STORM 100 evaluations under normal conditions of storage. The maximum temperatures of some of the components, such as MPC baseplate, are higher for Version UVH analyses compared to those for standard HI-STORM 100 under off normal condition. However, since the difference in temperatures are well within the respective margin-to-limits, no separate evaluations are required for the Version UVH system.

4.IV.6.1.2 Off-Normal Pressures

In accordance with NUREG-1536, a 10% rods rupture event is evaluated assuming 100% of the rods fill gases and 30% of fission gases release. [

PROPRIETARY INFORMATION WITHHELD IN ACCORDANCE WITH 10CFR2.390

]
The MPC-32M pressure under this postulated accident is computed and tabulated in Table 4.IV.4.4 for a cask under array configuration. The pressures are below the accident design pressure set forth in Supplement 2.IV.

4.IV.6.2 Accident Conditions

(a) Fire Accident

The Version UVH system contains steel inter-shell ribs that transfer heat flux due to fire more efficiently into the MPC, and therefore, the fire evaluations for Version UVH system are not necessarily bounded by those for standard HI-STORM 100. Therefore, a 3D CFD evaluation of the system is performed for the most bounding loading scenario i.e. MPC-32M with the bounding heat load pattern. An overview of the methodology is provided in the following:

1. The fire parameters based on NUREG-1536 [4.IV.6.1] and 10 CFR 71 guidelines [4.IV.6.2] are adopted directly from Section 4.6.2 of this FSAR.

2. Based on a 50-gallon fuel volume, overpack outer diameter, 1m fuel source ring and a fuel consumption rate of 0.15 in/min (lower bound value from reference [4.IV.6.3], consistent with that adopted in the main FSAR), a fire duration of 3.62 minutes is obtained.

3. The 3D CFD Model from Section 4.IV.4.1 is adopted with the above boundary conditions. Transient evaluations are performed from an initial condition of normal long-term storage (Section 4.IV.4.1).

Following the above methodology, the maximum temperature and pressure rise of the MPC internals due to a hypothetical fire event is given in Table 4.IV.6.1 for the bounding condition of HI-STORM UVH cask stored in an array. The temperatures presented includes the effect of neighboring casks following the detailed methodology presented in the companion calculation package [4.IV.4.1]. It can be seen that the PCT and the MPC component temperatures remain below their respective accident temperature limits for the hypothetical design basis fire scenario.

The above methodology can be adopted to perform evaluations to account for site-specific parameters (eg. combustible volume, cask decay heat load), as necessary.

(b) Jacket Water Loss Accident

A description of the jacket water loss accident is presented in Section 4.6.2.2 of the main FSAR.

The maximum allowable heat load of the MPCs qualified for use in HI-STORM 100 Version UVH system is significantly lower than those qualified for use in the standard HI-STORM 100 version. Therefore, the component temperatures and MPC cavity pressure under jacket water loss accident condition for the MPCs qualified for use in HI-STORM Version UVH will be bounded by those presented in Section 4.6.2.2 of the main FSAR.

(c) Extreme Environment Temperatures

Following the methodology presented in Section 4.6.2.3 of the main FSAR, to evaluate the effect of extreme weather conditions, an extreme ambient temperature (Table 1.IV.2.2) is postulated to persist for a 3-day period. Starting from the baseline condition evaluated in Section 4.IV.4.4 (normal ambient temperature and limiting fuel storage configuration for a cask emplaced in an array configuration) the temperatures of the HI-STORM 100 system are conservatively assumed to rise by the difference between the extreme and normal ambient temperatures (55ºF). The MPC component extreme ambient temperatures computed in this manner are reported in Table 4.IV.6.2. The co-incident MPC pressure is also computed (Table 4.IV.6.2) and compared with the accident design pressure (Supplement 2.IV), which shows a positive safety margin. The result is confirmed to be below the accident limit.

(d) Burial Under Debris

To demonstrate the inherent safety of the HI-STORM 100 Version UVH System, a bounding analysis that considers the debris to act as a perfect insulator is considered. Under this scenario, the contents of the HI-STORM 100 Version UVH System will undergo a transient heat up under adiabatic conditions. [

PROPRIETARY INFORMATION WITHHELD IN ACCORDANCE WITH 10CFR2.390

]

Substituting the parameters in Table 4.IV.6.3, a substantial burial time is obtained. The co-incident MPC pressure is also computed and presented in Table 4.IV.6.3.

Alternatively, the licensing basis model from Section 4.IV.4.1 can be used to compute the time limit under any postulated site-specific burial accident. The licensing basis 3D model shall be modified to include the site-specific burial conditions. For example, the portion of the cask buried under debris is assumed to be insulated. An evaluation shall be performed using this thermal model to compute the burial time for the respective MPC heat load such that all component temperature and pressure limits set forth in Chapter 2 are satisfied.

(f) Flood Accident

Many ISFSIs are located in flood plains susceptible to floods. However, since the Version UVH system is hermetically sealed, the event of flood water entering the internals of the system is not credible. In addition, the heat rejection of the Version UVH system to water is far more efficient than to air, and therefore, the results during normal long-term storage conditions bound those during an event of flood.

(g) 100% Rods Rupture Accident

In accordance with NUREG-1536, a 100% rods rupture accident is evaluated assuming 100% of the rods fill gases and 30% of fission gases release. [

PROPRIETARY INFORMATION WITHHELD IN ACCORDANCE WITH 10CFR2.390

]
The MPC-32M pressure under this postulated accident is computed and tabulated in Table 4.IV.4.4 for a cask under array configuration. The pressures are below the accident design pressure set forth in Supplement 2.IV.

TABLE 4.IV.6.1

BOUNDING MPC-32M /VERSION UVH RESULTS FOR DESIGN BASIS FIRE EVENT
(CASK ARRAY CONFIGURATION)

[

PROPRIETARY INFORMATION WITHHELD IN ACCORDANCE WITH 10CFR2.390

]

TABLE 4.IV.6.2

MPC-32M/VERSION UVH RESULTS FOR EXTREME AMBIENT TEMPERATURE CONDITION

[

PROPRIETARY INFORMATION WITHHELD IN ACCORDANCE WITH 10CFR2.390

]

TABLE 4.IV.6.3

SUMMARY OF INPUTS FOR BURIAL UNDER DEBRIS ANALYSIS

[

PROPRIETARY INFORMATION WITHHELD IN ACCORDANCE WITH 10CFR2.390

]

4.IV.7 REGULATORY COMPLIANCE

The statements on compliance of the vented storage system to the regulatory requirements of 10CFR72 presented in Section 4.7 remain applicable to the unvented system without limitation.

4.IV.8 REFERENCES

[4.IV.1.1] Final Safety Analysis Report on the HI-STORM FW System, HI-2114830, Latest Revision.

[4.IV.1.2] ANSYS Fluent Version 14.5, Ansys Inc.

[4.IV.4.1] Thermal Evaluation of HI-STORM 100 UVH, HI-2210138, Latest Revision.

[4.IV.6.1] NUREG-1536, "Standard Review Plan for Dry Cask Storage Systems," USNRC, Revision 1.

[4.IV.6.2] United States Code of Federal Regulations, Title 10, Part 71.

[4.IV.6.3] Gregory, J.J. et. al., "Thermal Measurements in a Series of Large Pool Fires", SAND85-1096, Sandia National Laboratories, (August 1987).

SUPPLEMENT 5.IV: SHIELDING EVALUATION OF THE HI-STORM 100 SYSTEM WITH VERSION UVH OVERPACK

5.IV.0 Introduction

This supplement provides shielding evaluation of the HI-STORM 100 System with the unventilated version of the overpack, wherein the overpack's inlet and outlet air passages have been removed resulting in a complete cessation of associated radiation streaming and ventilation in the space between the cask cavity and the stored multi-purpose canister (MPC) during the system's operation. The overpack model is referred to as HI-STORM 100 Version UVH. The principal components of the HI-STORM 100 System that are subject to certification for the HI-STORM 100 Version UVH remain unchanged from the versions previously qualified and certified in this FSAR. Specifically, the HI-STORM 100 Version UVH overpack is qualified to store all MPC model types listed in Table 2.IV.1.1. The following components are explicitly evaluated in this supplement:

- HI-STORM 100 Version UVH – an unventilated version of the HI-STORM 100 overpack made of high-density concrete, with characteristics described in Supplement 1.IV.
- HI-TRAC Version MS and MPC-32M. These are variations of the HI-TRAC and MPC-32 addressed in the main part of this chapter, with characteristics described in Supplement 1.II.
- MPC-68M. This is a variation of the MPC-68 canister addressed in the main part of this chapter, with characteristics described in Supplement 1.III.

Note that the HI-TRAC Version MS cask is only analyzed in this supplement because the content for the MPC-32M and MPC-68M canisters is different from those previously evaluated for these canisters. The design of the HI-TRAC transfer casks, and the canisters, is unchanged.

The shielding evaluation of the HI-STORM 100 Version UVH System fully follows the methodology described in Supplement 5.II. All shielding analyses in this supplement were performed with MCNP5-1.51 [5.IV.1], which is the same code as that used for the evaluation of the HI-STORM 100 System with MPC-32M and MPC-68M in Supplements 5.II and 5.III, respectively. The source terms were determined by the TRITON/ORIGAMI sequence from SCALE 6.2.1 [5.IV.2], consistent with the analyses documented in Supplement 5.II.

The evaluation presented herein supplements those evaluations of the HI-STORM 100 System contained in the main body of Chapter 5 and Supplement 5.II of this FSAR, and information that remains applicable to HI-STORM 100 Version UVH is not repeated here, but referenced accordingly. The sections in this supplement are numbered in the same fashion as the corresponding sections in the main body of this chapter, i.e., Sections 5.IV.1 through 5.IV.6 correspond to Sections 5.1 through 5.6.

5.IV.1 Discussion and Results

The most distinctive feature of the HI-STORM 100 storage system introduced via this supplement is the unventilated overpack called Version UVH. The principal shielding design of the HI-STORM 100 UVH overpack is identical to the overpack designs evaluated in the main body of this chapter and Supplement 5.II, with gamma shielding provided by the concrete and steel materials, and neutron shielding provided by the concrete. The other components, namely the MPCs listed in Table 2.IV.1.1 and the HI-TRAC transfer casks, remain unchanged from the versions previously qualified and certified in this FSAR.

All calculations in this supplement are performed for the MPC-32M and MPC-68M canisters with the unifom and regionalized loadings, informed by the loading patterns introduced in Section 2.IV.1. The following configurations are considered for the bounding dose analyses:

[PROPRIETARY INFORMATION WITHHELD IN ACCORDANCE WITH 10 CFR 2.390]

[PROPRIETARY INFORMATION WITHHELD IN ACCORDANCE WITH 10 CFR 2.390]

5.IV.1.1 Normal and Off-Normal Operations

As discussed in Subsection 5.1.1, none of the off-normal conditions have any impact on the shielding analysis, and this is also applicable to the systems described in this supplement, since the principal designs are the same. Therefore, off-normal and normal conditions are identical for the purpose of the shielding evaluation.

For each dose rate location, the maximum possible dose rate over the entire range of qualified content for both uniform and regionalized loading patterns is determined and presented.

Table 5.IV.1.1 provides the maximum dose rates adjacent to and one meter from the HI-STORM 100 Version UVH overpack with MPC-32M during normal conditions.

Table 5.IV.1.2 presents the annual dose to an individual from a single HI-STORM 100 Version UVH cask and various storage cask arrays, assuming an 8760 hour annual occupancy at the dose point location. The minimum distance required for the corresponding dose is also listed.

Table 5.IV.1.3 provides dose rates adjacent to and one meter from the HI-TRAC Version MS transfer cask with MPC-32M. The dose rates correspond to the normal condition in which the MPC is dry and the HI-TRAC Version MS water jacket is filled with water. The dose rates in this table are calculated for the limiting content of MPC-32M, and shielding thickness of the HI-TRAC Version MS cask that lead to dose rates on the outside of the cask that are consistent with the dose rate limit set for that location. For dose rates under other conditions see Section 5.IV.4. [PROPRIETARY INFORMATION WITHHELD IN ACCORDANCE WITH 10 CFR 2.390]

The analyses summarized in this supplement demonstrate that the HI-STORM 100 System, including the HI-STORM 100 Version UVH storage cask, the HI-TRAC transfer casks and the MPC-32M and MPC-68M canisters, are capable of meeting the 10CFR72.104 limits and support ALARA practices.

5.IV.1.2 Accident Conditions

The discussions in Subsection 5.1.2 remain fully applicable for the HI STORM 100 System components evaluated in this supplement, except that dose rates are re-calculated for the HI-TRAC Version MS cask with the MPC-32M with the most limiting content. Results for this case are summarized in Table 5.IV.1.4 at 1 and 100 meters from the HI-TRAC Version MS cask with the lower bound lead and water jacket thicknesses under accident conditions. Consistent with Subsection 5.1.2, it is conservatively assumed that the neutron shield (water) is completely lost and replaced by a void under the accident condition. The normal condition dose rates are provided for reference, but note that bounding content for normal and accident conditions may not be identical, since both are determined to maximize dose rates under the respective condition. Also note that the dose rates under normal conditions are different from those in Table 5.IV.1.3 since minimum shielding thicknesses are assumed here.

Overall, the results show that under bounding conditions, the requirements form 10CFR72.106 will always be met at 100 m from the ISFSI. Additional site-specific evaluations for accident conditions are therefore not required.

Table 5.IV.1.1

DOSE RATES ADJACENT TO AND AT ONE METER FROM HI-STORM 100 VERSION UVH OVERPACK FOR NORMAL CONDITIONS MPC-32M

Dose Point[1] Location	Fuel Gammas[2] (mrem/hr)	^{60}Co Gammas (mrem/hr)	Neutrons (mrem/hr)	Totals (mrem/hr)	Totals with BPRAs (mrem/hr)
ADJACENT TO OVERPACK					
1	19.55	3.25	0.07	22.87	24.00
2	58.97	0.00	0.16	59.13	62.55
3	0.45	0.70	0.01	1.17	1.93
4	2.39	0.17	1.89	4.45	4.91
ONE METER FROM OVERPACK					
1	11.07	0.54	0.02	11.63	12.32
2	25.17	0.04	0.06	25.27	26.25
3	3.87	0.25	0.01	4.13	4.53
4	0.76	0.10	0.53	1.39	1.70

[1] Refer to Figure 5.IV.3-1.

[2] Gammas generated by neutron capture are included with fuel gammas.

Table 5.IV.1.2

DOSE RATES FOR ARRAYS OF HI-STORM 100 VERSION UVH CONTAINING MPC-32M

Array Configuration	1 cask	2x2	2x3	2x4	2x5
Annual Dose (mrem/year)[1]	18.31	11.59	17.38	23.18	11.39
Distance to Controlled Area Boundary (meters)[2]	200	300	300	300	400

[1] 8760 hr. annual occupancy is assumed.

[2] Dose location is at the center of the long side of the array.

Table 5.IV.1.3

**DOSE RATES FROM HI-TRAC VERSION MS
FOR NORMAL CONDITIONS
MPC-32M**

Dose Point[1] Location	Fuel Gammas[2] (mrem/hr)	^{60}Co Gammas (mrem/hr)	Neutrons (mrem/hr)	Totals (mrem/hr)	Totals with BPRAs (mrem/hr)
ADJACENT TO HI-TRAC					
1	380.07	677.38	196.57	1254.02	1270.97
2	2920.91	1.32	246.89	3169.12	3406.81
3	4.29	5.86	25.86	36.01	51.28
4	2781.88	1218.31	167.11	4167.30	5036.62
5	864.17	5414.03	1095.73	7373.94	7645.65
ONE METER FROM HI-TRAC					
1	353.51	157.92	37.56	548.98	576.31
2	944.27	4.76	74.96	1023.99	1101.66
3	139.33	37.87	13.15	190.35	224.61
4	207.72	370.69	55.26	633.67	1053.37

[1] Refer to Figure 5.II.3-4.
[2] Gammas generated by neutron capture are included with fuel gammas.

Table 5.IV.1.4

**DOSE RATES FROM HI-TRAC VERSION MS
FOR ACCIDENT CONDITIONS
MPC-32M**

Dose Point[1] Location	Fuel Gammas[2] (mrem/hr)	^{60}Co Gammas (mrem/hr)	Neutrons (mrem/hr)	Totals (mrem/hr)	Totals with BPRAs (mrem/hr)
ONE METER FROM HI-TRAC					
2 (Accident Condition)	4420.46	37.56	1768.08	6226.09	6678.55
2 (Normal Condition)	3257.23	18.72	89.31	3365.27	3658.95
100 METERS FROM HI-TRAC					
2 (Accident Condition)	1.55	0.12	0.64	2.30	2.49

[1] Refer to Figure 5.II.3-4.
[2] Gammas generated by neutron capture are included with fuel gammas.

5.IV.2 Source Specification

The neutron and gamma source terms were calculated with the TRITON / ORIGAMI modules of the SCALE 6.2.1 code package [5.IV.2]. These source terms have already been used in the shielding evaluation of the HI-STORM 100S Version E System documented in Supplement 5.II of this FSAR. Unless otherwise noted in the following subsections, the discussions and conclusions in Section 5.II.2 remain applicable to the evaluations in this supplement.

5.IV.2.1 Design Basis Assembly

See Subsection 5.II.2.1.

5.IV.2.2 Fuel Specifications and Limits

The fuel specifications and limitations for the MPC-32M and MPC-68M canisters to be loaded into the HI-STORM 100 Version UVH System are addressed in this subsection.

5.IV.2.2.1 Burnup and Cooling Times

Burnup and cooling time limits are specified in Supplement 2.IV for each basket cell through a loading curve that defines the minimum cooling time as a function of the assembly burnup. The loading curves are informed by the permissible heat loads described in Section 2.IV.1. However, they are completely independent loading criteria, in that meeting the heat load limit is no substitute for meeting the burnup and cooling time limits, and vice versa.

[PROPRIETARY INFORMATION WITHHELD IN ACCORDANCE WITH 10 CFR 2.390]

The loading curves for the MPC-32M and MPC-68M canisters are provided in Table 2.IV.1.7 and Table 2.IV.1.8, respectively, using polynomial equation and corresponding polynomial coefficients. [PROPRIETARY INFORMATION WITHHELD IN ACCORDANCE WITH 10 CFR 2.390]

The configurations selected for shielding analyses of the HI-STORM 100 Version UVH System encompass all configurations permitted for the MPC-32M and MPC-68M canisters, i.e., uniform and regionalized. All sets of burnup and cooling time combinations used in the analyses are presented in Tables 5.IV.2.1 and 5.IV.2.2, together with the basket configurations they apply to.

5.IV.2.2.2 Fuel Enrichment

As discussed in Paragraph 5.4.11.2 in the main part of this chapter, a conservatively low enrichment value is selected for each burnup based on industry information on more than 130,000 PWR and 185,000 BWR assemblies. The determined enrichment values provided in Table 5.4.20 are used in all dose analyzes presented in this supplement.

5.IV.2.3 Non-Fuel Hardware

See Subsection 5.II.2.3.

Table 5.IV.2.1

BURNUP, ENRICHMENT AND COOLING TIMES COMBINATIONS CONSIDERED FOR MPC-32M

Applicability	Burnup (MWd/mtU)	Enrichment (wt% ^{235}U)	Calculated Cooling Time[1] (years)	Cooling Time Assumed in Dose Analysis (years)
Uniform Loading	5000	1.1	1.44	1.4
	10000	1.1	1.94	1.8
	20000	1.6	2.66	2.6
	30000	2.4	3.37	3.0
	40000	3.0	4.45	4.0
	50000	3.6	6.31	6.0
	60000	3.9	9.33	9.0
	70000	4.2	13.9	13.0
Zone 2[2] for Regionalized Configuration	5000	1.1	0.74	1.0
	10000	1.1	0.83	1.0
	20000	1.6	1.03	1.0
	30000	2.4	1.23	1.2
	40000	3.0	1.45	1.4
	50000	3.6	1.70	1.6
	60000	3.9	1.96	1.8
	70000	4.2	2.24	2.2

[1] Cooling times are calculated following the methodology in Subsection 2.IV.1.2 using the coefficients in Tables 2.IV.1.7.
[2] [PROPRIETARY INFORMATION WITHHELD IN ACCORDANCE WITH 10 CFR 2.390]

Table 5.IV.2.2

BURNUP, ENRICHMENT AND COOLING TIMES COMBINATIONS CONSIDERED FOR MPC-68M

Applicability	Burnup (MWd/mtU)	Enrichment (wt% ^{235}U)	Calculated Cooling Time[1] (years)	Cooling Time Assumed in Dose Analysis (years)
Uniform Loading	5000	0.7	0.80	1.0
	10000	0.9	1.68	1.6
	20000	1.6	2.73	2.6
	30000	2.4	3.31	3.0
	40000	3.0	3.98	3.5
	50000	3.3	5.32	5.0
	60000	3.7	7.89	7.0
	70000	4.0	12.3	12.0
Zone 2[2] for Regionalized Configuration	5000	0.7	0.58	1.0
	10000	0.9	0.20	1.0
	20000	1.6	0.39	1.0
	30000	2.4	0.81	1.0
	40000	3.0	1.10	1.0
	50000	3.3	1.31	1.2
	60000	3.7	1.50	1.4
	70000	4.0	1.72	1.6

[1] Cooling times are calculated following the methodology in Subsection 2.IV.1.2 using the coefficients in Table 2.IV.1.8.
[2] [PROPRIETARY INFORMATION WITHHELD IN ACCORDANCE WITH 10 CFR 2.390]

[PROPRIETARY INFORMATION WITHHELD IN ACCORDANCE WITH 10 CFR 2.390]

FIGURE 5.IV.2-1 ZONE NUMBERS IN THE MODEL OF THE MPC-32M BASKET

[PROPRIETARY INFORMATION WITHHELD IN ACCORDANCE WITH 10 CFR 2.390]

FIGURE 5.IV.2-2 ZONE NUMBERS IN THE MODEL OF THE MPC-68M BASKET

5.IV.3 Model Specifications

Generally, the model specification of the fuel assemblies, MPCs, radiation sources, etc. is the same as in Section 5.3 of the main body of this chapter and Supplement 5.II, unless otherwise noted in the following subsections.

5.IV.3.1 Description of the Radial and Axial Shielding Configuration

Full three-dimensional calculational models based on the drawings listed in Chapter 1 supplements are used in the shielding analysis. Nominal dimensions are used in the models consistent with the main part of Chapter 5, unless stated otherwise. This is considered sufficient for the purpose of this supplement to demonstrate reasonable assurance of an adequate level of safety. For the HI-TRAC Version MS cask, the bounding condition with the minimum shielding thicknesses discussed in Supplement 5.II is considered, unless noted otherwise. As discussed in Supplement 1.II, some parameters may be customized on a site-specific basis to optimize the shielding performance. These changes will be considered in the site-specific calculations. The site-specific assessment also needs to verify that the fuel assembly design and assembly characteristics used in the calculations are appropriate.

Figures 5.IV.3-1 and 5.IV.3-2 show representative cross sections of the MCNP model for the HI-STORM Version UVH cask with the MPC-32M basket. The ribs and bolt recesses are modeled explicitly, therefore, streaming through these components is accounted for in the dose rate calculations. The description and representative cross sections of the MCNP model for the HI-TRAC Version MS cask and/or the MPC-68M canister are provided in Subsection 5.II.3.1 and they are not repeated here. Table 5.II.3.1 shows the variation in the HI-TRAC Version MS main shielding component thicknesses, i.e., for lead and water in the cask wall, which are also used in the calculations in this supplement.

The conservative assumptions and approximations made in modeling the MPC are provided in Subsection 5.II.3.1. The conservative approximations for HI-STORM 100 Version UVH are listed below.

- The HI-STORM lid ribs above the lid top plate are neglected.

5.IV.3.2 Regional Densities

In addition to the composition and densities of the various materials used in the HI-STORM 100 System shielding analyses and presented in Tables 5.3.2 and Table 5.II.3.2, the shielding model of HI-STORM Version UVH employ the materials provided in Table 5.IV.3.1.

[PROPRIETARY INFORMATION WITHHELD IN ACCORDANCE WITH 10 CFR 2.390]

Table 5.IV.3.1

COMPOSITION OF THE MATERIALS IN THE HI-STORM 100 SYSTEM

Component	Density (g/cm^3)	Elements	Mass Fraction (%)
High-Density Concrete	[PROPRIETARY INFORMATION WITHHELD IN ACCORDANCE WITH 10 CFR 2.390]		

[PROPRIETARY INFORMATION WITHHELD IN ACCORDANCE WITH 10 CFR 2.390]

FIGURE 5.IV.3-1 CALCULATIONAL MODEL (AXIAL CROSS-SECTION) OF HI-STORM VERSION UVH (SHOWN WITH MPC-32M)

[PROPRIETARY INFORMATION WITHHELD IN ACCORDANCE WITH 10 CFR 2.390]

FIGURE 5.IV.3-2 CALCULATIONAL MODEL (RADIAL CROSS-SECTION) OF HI-STORM VERSION UVH (SHOWN WITH MPC-32M)

5.IV.4 Shielding Evaluation

5.IV.4.1 General

In general, the same methodology is used as described in Section 5.II.4 for the dose rate calculations, unless otherwise noted in the following subsections. Modeling of the content for the MPC-32M and MPC-68M canisters is presented in detail in Section 5.IV.2.

Bounding results for HI-STORM 100 Version UVH are summarized in Section 5.IV.1, Tables 5.IV.1.1 and 5.IV.1.2. For HI-TRAC Version MS, results are presented in Section 5.IV.1, in Table 5.IV.1.3 for normal conditions and Table 5.IV.1.4 for accident conditions. Results for accident conditions are presented there for upper bound content, and lower bound shielding thicknesses, so they present an overall bounding condition, and no further information is needed. However, for normal conditions, as discussed in Section 5.IV.1, results are presented for upper bound content, but for shielding thicknesses that result in radial dose rates consistent with the dose limit selected for ALARA purposes. For illustrative purposes, additional calculations are performed for different assumptions on content or shielding thicknesses (see Table 5.II.3.1). Results for all calculations, showing only total dose rates for all relevant surface and 1 m dose locations, are summarized and compared in Table 5.IV.4.1. The following conditions are shown:

- Bounding content, thickness selected for compliance with the external dose rate limit. These are the results for the regionalized loading pattern from Section 5.IV.1;
- Minimum thickness, content adjusted to match external dose limit. This is presented as an example to show what content limits will result in dose rates matching the limit, even if the HI-TRAC Version MS with minimum shielding thicknesses is used. The same combinations as in Table 5.IV.2.1, but with the cooling times increased by 4 years, are used for this example;
- Bounding content and reference thicknesses, assuming a higher crane capacity;
- Bounding content and reference thicknesses, but the annulus between the transfer cask and MPC is flooded by water. This condition represents a typical configuration for most loading operations in the vicinity of the transfer cask.

The results and comparisons show that for HI-TRAC Version MS designed for higher crane capacities, the external dose rates can be significantly lower than those presented in Section 5.IV.1. However, for a combination of the bounding content and bounding shielding thicknesses, the external dose rates would be unacceptably high, justifying the introduction of the dose limit.

Note that dose location 4, in the top of HI-TRAC Version MS, shows a high dose rate in almost all cases. However, this is present only in a very narrow area above the annulus between the MPC and HI-TRAC Version MS, and for the condition where both the MPC and annulus are empty, i.e., no longer filled with water. Under this condition there is essentially no need for any access to this narrow area, so this high dose rate is inconsequential from an operational dose perspective. For illustration, the results in Table 5.IV.4.1 show that the dose rate in the top of HI-TRAC Version MS is substantially reduced when the annulus between HI-TRAC Version MS and MPC is flooded.

As discussed in Subsection 5.IV.2.2, the HI-STORM 100 Version UVH System is qualified for the MPC-32M and MPC-68M canisters with the uniform and regionalized loading patterns. From a dose rate versus distance perspective, all these are bounded by the dose rates presented for MPC-32M with the

regionalized loading in this supplement, due to the high source term used for evaluating this configuration. To demonstrate that this is the case, a comparison is performed for the HI-STORM 100 Version UVH cask with both MPCs. The following content is modeled for those:

[PROPRIETARY INFORMATION WITHHELD IN ACCORDANCE WITH 10 CFR 2.390]

The comparison is presented in Tables 5.IV.4.2 for HI-STORM 100 Version UVH. It confirms that the MPC-68M results are bounded by the analyses presented here, so both MPCs are equally qualified for the systems analyzed in this supplement. While the regionalized loading patterns generally produce the bounding results, the maximum dose rate at the top surface of the cask is generated by the uniform loading. Hence the maximum dose rate over the entire range of qualified content for both uniform and regionalized loading patterns is presented for each dose rate location in Section 5.IV.1. Additionally, Tables 5.IV.4.3 provides a comparison of the MPC-32M and MPC-68M canisters with the uniform loading in the HI-TRAC Version MS cask with the lower bound shielding thicknesses.

The principal design of the HI-TRAC Version MS cask is similar to the other HI-TRAC transfer casks previously qualified and certified in this FSAR and, as discussed in Section 5.IV.1, a dose rate limit is applied to the outer surface of the transfer cask, when loaded with the content defined in Supplement 2.IV. The conservative analyses for the limiting HI-TRAC Version MS transfer cask with the minimum thickness of the shielding materials are therefore used to qualify all the HI-TRAC versions for the MPCs analyzed in this supplement.

5.IV.4.2 Site Boundary Evaluation

The dose from a single HI-STORM overpack loaded with an MPC and from various arrays of loaded HI-STORMs at distances equal to and greater than 100 meters is determined as discussed in Subsection 5.II.4.2. Results of the analyses are presented in Tables 5.IV.4.4 and 5.IV.4.5, for 100% occupancy (8760 hours), and using bounding source terms. Table 5.IV.4.4 shows the annual dose rate, by dose component, at 200 m. Table 5.IV.4.5 shows the annual dose values A, B and C for determining the dose from ISFSI arrays, for various distances.

Table 5.IV.4.1

TOTAL DOSE RATES AROUND THE HI-TRAC VERSION MS WITH THE MPC-32M FOR DIFFERENT CONTENT AND SHIELDING THICKNESS COMBINATIONS

Content/Shielding Configuration				
Content	Bounding	Adjusted	Bounding	Bounding
Shielding[1]	Adjusted	Minimum	Reference	Reference
Annulus[2]	Empty	Empty	Empty	Water
Dose Point[3] **Location**	**TOTAL DOSE RATES (mrem/hr)** [4]			
ADJACENT TO HI-TRAC				
1	1271	724	1310	1013
2	3407	3745	1815	1447
3	44	88	27	15
4	5037	2748	5059	1767
5	4597	2726	4587	4256
ONE METER FROM HI-TRAC				
1	576	618	381	317
2	1102	1194	588	495
3	225	366	118	94
4	906	469	936	389

[1] Refer to Table 5.II.3.1.
[2] Radial annulus between the HI-TRAC Version MS cask and MPC enclosure vessel.
[3] Refer to Figure 5.II.3-4.
[4] Values are rounded to nearest integer.

Table 5.IV.4.2

COMPARISON OF TOTAL DOSE RATES AROUND THE HI-STORM 100 VERSION UVH FOR DIFFERENT MPCs

MPC	MPC-32M		MPC-68M	
Content	Regionalized	Uniform	Regionalized	Uniform
Dose Point[1] Location	TOTAL DOSE RATES (mrem/hr)			
ADJACENT TO OVERPACK				
1	24.0	11.8	17.5	9.8
2	62.6	25.8	56.5	27.2
3	1.7	1.9	0.8	1.0
4	1.6	4.9	0.8	2.2
ONE METER FROM OVERPACK				
1	12.3	5.8	11.3	5.8
2	26.2	12.3	26.4	12.9
3	4.5	2.7	2.3	1.5
4	0.9	1.7	0.4	0.8

[1] Refer to Figure 5.IV.3-1.

Table 5.IV.4.3

COMPARISON OF TOTAL DOSE RATES AROUND THE HI-TRAC MS FOR DIFFERENT MPCs

MPC	MPC-32M	MPC-68M
Content	Uniform	Uniform
Dose Point[1] Location	TOTAL DOSE RATES (mrem/hr)[2]	
ADJACENT TO HI-TRAC		
1	847	798
2	4860	3964
3	136	74
4	4418	2801
5	7526	6521
ONE METER FROM HI-TRAC		
1	968	705
2	1824	1477
3	674	370
4	1066	556

[1] Refer to Figure 5.II.3-4.
[2] Values are rounded to nearest integer.

Table 5.IV.4.4

ANNUAL DOSE AT 200 METERS FROM A SINGLE HI-STORM 100 VERSION UVH OVERPACK WITH MPC-32M[1]

Dose Component	Annual Dose (mrem/yr)
Fuel gammas[2]	17.23
^{60}Co Gammas	0.24
Neutrons	0.05
BPRA	0.79
Total	18.31

[1] 8760 hour annual occupancy is assumed.

[2] Gammas generated by neutron capture are included with fuel gammas.

Table 5.IV.4.5

DOSE VALUES USED IN CALCULATING ANNUAL DOSE FROM VARIOUS HI-STORM 100 VERSION UVH ISFSI CONFIGURATIONS[1]

Distance	A Side of Overpack (mrem/yr)	B Top of Overpack (mrem/yr)	C Side of Shielded Overpack (mrem/yr)
100 meters	97.36	10.82	19.47
200 meters	16.48	1.83	3.30
300 meters	4.07	0.45	0.81
400 meters	1.60	0.18	0.32
500 meters	0.69	0.08	0.14
600 meters	0.26	0.03	0.05

[1] 8760 hour annual occupancy is assumed.

5.IV.5 Regulatory Requirements

The analyses summarized in this supplement demonstrate that the design variation of the HI-STORM 100 System with the HI-STORM 100 Version UVH storage cask is capable of meeting the applicable regulatory requirements, and support ALARA practices. Thus, this shielding evaluation provides reasonable assurance that the HI-STORM 100 System will allow safe storage of spent fuel.

5.IV.6 References

[5.IV.1] X-5 Monte Carlo Team, MCNP - A General Monte Carlo N-Particle Transport Code, Version 5, LA-UR-03-1987, Los Alamos National Laboratory, April 2003 (Revised 2/1/2008).

[5.IV.2] B. T. Rearden and M. A. Jessee, Eds., SCALE Code System, ORNL/TM-2005/39, Version 6.2.1, Oak Ridge National Laboratory, Oak Ridge, Tennessee (2016).

CHAPTER 8.IV: OPERATING PROCEDURES

8.IV.0 INTRODUCTION

The operations associated with the use of the HI-STORM 100 UVH system, are like the operations for the standard HI-STORM 100 system. The following sections describe those operations that are, in any respect, unique to the HI-STORM 100 UVH system and thus supplement the information presented in Chapter 8. Where practical, the section numbers used below directly reference the corresponding sections in Chapter 8. For example, Subsection 8.IV.3.5 supplements the operations described in Subsection 8.3.5. The guidance provided in this supplement shall be used along with the operations procedures provided in Chapter 8 to develop the site-specific operating procedures for the HI-STORM 100 UVH.

8.IV.0 TECHNICAL AND SAFETY BASIS FOR LOADING AND UNLOADING PROCEDURES

The Technical and Safety Basis for loading and unloading the HI-STORM 100 identified in Section 8.0 of Chapter 8 are applicable to the HI-STORM 100 UVH.

8.IV.1 PROCEDURE FOR LOADING THE HI-STORM 100 UVH SYSTEM IN THE SPENT FUEL POOL

The procedures presented within Subsections 8.1.1 through 8.1.5 of Chapter 8 are identical for the HI-STORM 100 UVH system. The changes to operations when placing the HI-STORM 100 UVH into storage are described below.

8.IV.1.7 Placement of HI-STORM 100 UVH into Storage

The following instructions shall be incorporated to the cask operations as additional steps to the generic guidance in Section 8.1.6 on loading operations for unventilated cask models in Chapter 8:

1. Before installing the Closure Lid on the cask body, the lid gasket is placed on the top of the cask's top ring.
2. Inspect cask cavity and confirm to be visibly dry (free of standing water).
3. Place cask lid on top of the gasket.
4. Continue with the steps of Subsection 8.1.7 of Chapter 8 for conducting the required surface dose rate measurements in accordance with the Technical Specification and movement of the overpack to its storage location on the ISFSI pad.
5. After the cask is placed in its storage location on the ISFSI pad, install lid studs, washers, and hex nuts onto the cask.
6. Tighten lid hex nuts to the point of contact with the washer. Then loosen nut to provide a nominal axial gap of 0.5".
7. Evacuate air in the MPC/HI-STORM 100 UVH annulus and replace with dry nitrogen (or another non-oxidizing gas) using couplings provided in the small penetrations in the cask body. The target fill pressure of the non-oxidizing fill gas shall be as indicated on Table 4.IV.1.3.

Table 8.IV.1.6

HI-STORM 100 SYSTEM ANCILLARY EQUIPMENT OPERATIONAL DESCRIPTION

Equipment	Important To Safety Classification	Description
HI-STORM UVH Annulus Evacuation System	Not Important To Safety	Used to evacuate air from the HI-STORM UVH annulus space.
Nitrogen (or another non-oxidizing gas) Backfill System	Not Important To Safety	Used for controlled insertion of nitrogen into the HI-STORM UVH for placement into storage.

Table 8.IV.1.7

HI-STORM 100 SYSTEM INSTRUMENTATION SUMMARY FOR LOADING AND UNLOADING OPERATIONS†

Instrument	Function
Pressure Gauges	Ensures correct pressure during HI-STORM backfill operations.

† All instruments require calibration.

Table 8.IV.1.8 HI-STORM 100 UVH SYSTEM OVERPACK INSPECTION CHECKLIST
Note: This checklist provides a supplement to the main table 8.2.3 as a basis for establishing additional steps to a site-specific inspection checklist for the HI-STORM 100 UVH overpack. Specific findings shall be brought to the attention of the appropriate site organizations for assessment, evaluation, and potential corrective action prior to use.

HI-STORM 100 UVH Overpack Lid:

1. Lid sealing surfaces shall be cleaned and inspected for corrosion, scratches, and gouges.
2. Lid seal shall be inspected for cuts, abrasions, or other damage which may affect is function.

HI-STORM 100 Main Body:

1. Vents inspections are not required because the HI-STORM 100 UVH body does not include vents.

8.IV.2 ISFSI OPERATIONS

The HI-STORM 100 UVH system heat removal system is a totally passive system. Maintenance on the HI-STORM 100 UVH system is typically limited to cleaning and touch-up painting of the overpacks. The HI-STORM 100 UVH system does not have vents which require surveillance. In the unlikely event of significant damage to the HI-STORM 100 UVH, the situation may warrant removal of the MPC, and repair or replacement of the damaged HI-STORM 100 UVH overpack. The procedures in Section 8.1 should be used to reposition a HI-STORM 100 UVH overpack for minor repairs and maintenance. In extreme cases, Section 8.3 provides guidance in addition to Section 8.4 of Chapter 8 for unloading the MPC from the HI-STORM 100 UVH.

8.IV.3 PROCEDURE FOR UNLOADING THE HI-STORM 100 UVH FUEL IN THE SPENT FUEL POOL

The HI-STORM 100 UVH system unloading procedures shall be identical to main chapter section 8.3.

Additional steps are included below for the removal of the HI-STORM UVH lid.

8.IV.3.2 HI-STORM 100 UVH Recovery from Storage

1. Prior to recovering the MPC from HI-STORM 100 UVH, the following step shall be performed:

   The HI-STORM UVH annulus internal pressure must be vented through the lower drain fitting to atmospheric pressure prior to any HI-STORM 100 UVH lifting operations.

8.IV.4. MPC TRANSFER TO A HI-STAR 100 OVERPACK FOR TRANSPORT OR STORAGE

When the MPC is recovered from storage and transferred to a HI-STAR 100 Overpack, the procedures from section 8.3 are used. There are no HI-STAR operations that will change.

8.IV.5. MPC TRANSFER INTO THE HI-STORM 100 UVH OVERPACK DIRECTLY FROM TRANSPORT

When the MPC is recovered from storage and transferred to a HI-STAR 100 Overpack the procedures from Section 8.3 are used. There are no HI-STAR transfer operations that require change.

8.IV.6. REFERENCES

There are no new references added for the HI-STORM 100 UVH system

CHAPTER 9.IV: ACCEPTANCE CRITERIA AND MAINTENANCE PROGRAM

9.IV.0 INTRODUCTION

The addition of the Unventilated overpack through Supplement IV does not involve the introduction of any new structural or shielding materials, MPCs, or transfer casks to the Storage system. Therefore, no change to the areas which cover most of Chapter 9 is necessary. Any additional tests, inspections, and maintenance activities are identified in the following sections. The following sections describe the Acceptance and Maintenance activities that are unique to the HI-STORM 100 UVH system and thus supplement the information presented in Chapter 9. Where practical, the section numbers used below directly reference the corresponding sections in Chapter 9. For example, Subsection 9.IV.1.3 supplements the operations described in Subsection 9.1.3. The guidance provided in this supplement shall be used along with the Acceptance and Maintenance Activities provided in Chapter 9 to develop the site-specific maintenance procedures for the HI-STORM 100 UVH.

9.IV.1 ACCEPTANCE CRITERIA

9.IV.1.1 Fabrication and Nondestructive Examination (NDE)

The HI-STORM 100 UVH does not introduce any new fabrication or NDE requirements.

9.IV.1.2 Structural and Pressure Tests

The HI-STORM 100 UVH does not introduce any new structural or pressure test beyond what is presented in Subsection 9.1.2. Pressure testing of the HI-STORM 100 UVH Body is not required due to low operating pressure.

9.IV.1.2.3 Materials Testing

There are no new structural and shielding materials used for the HI-STORM 100 UVH. No additional materials testing is required for the HI-STORM 100 UVH. The HI-STORM Lid seal will be a metallic material that is demonstrated to not degrade over the service life of the cask.

9.IV.1.3 Leakage Testing

There is no leakage test required for the HI-STORM 100 UVH boundary. The function of the HI-STORM 100 UVH seal is to provide a barrier against deleterious effects of the environment, not as a pressure boundary. The only requirement is that the gasket is inspected to ensure that it is intact and new before the lid is installed

9.IV.1.4 Component Tests

9.IV.1.4.1 Valves, Pressure Relief Devices, and Fluid Transport Devices

There are no additional valves or pressure relief devices introduced for the HI-STORM 100 UVH System. Excess pressure is released from the boundary by the HI-STORM lid momentarily lifting from the body and then re-seating.

9.IV.1.4.2 Seals and Gaskets

The Lid to Cask body in the unventilated overpack features a gasket to isolate the environment in the cask's cavity space from ambient air. The gasket does not perform a safety significant function and thus no additional testing is required.

9.IV.1.5 Shielding Integrity

There are no new tests or inspections required for shielding integrity.

9.IV.1.6 Thermal Acceptance Tests

The Air Temperature Rise test will not be required for the HI-STORM 100 UVH unventilated overpack. There are no inlet and outlet vents that require monitoring or inspection.

9.IV.1.7 Cask Identification

There are no new marking requirements.

9.IV.2 MAINTENANCE PROGRAM

As the addition of the unventilated overpack through Supplement # I does not involve the introduction of any new structural or shielding materials, MPCs or transfer cask to the Storage system, only minimal changes to the Maintenance activities outlined in Section 9.2 of Chapter 9 are required. Any additional tests, inspections, and maintenance activities are identified in the following Subsections.

9.IV.2.1 Structural and Pressure Parts

No additional maintenance for structural and pressure parts is required for the HI-STORM 100 UVH.

9.IV.2.2 Leakage Tests

Leakage tests are not a requirement for the storage maintenance program.

The unventilated Storage system lid gasket requires the additional maintenance step of replacement anytime the joint is completely disassembled. A new gasket shall be used upon re-assembly.

9.IV.2.3 Subsystem Maintenance

The HI-STORM 100 UVH does not have vents and will not have the option a monitoring system which must be maintained.

9.IV.2.4 Pressure Relief Devices

There is no additional pressure relief device introduced for the HI-STORM 100 UVH System which must be maintained.

9.IV.2.5 Shielding

There are no additional shielding maintenance requirements for the HI-STORM 100 UVH.

9.IV.2.6 Thermal

The HI-STORM 100 UVH does not include air vents. As a result, surveillance or monitoring is not required during storage operations.

Table 9.IV.2.1 HI-STORM SYSTEM MAINTENANCE PROGRAM SCHEDULE	
Task	**Frequency**
HI-STORM UVH Lid Seal Replacement	In the event the HI-STORM lid is completely disassembled from the body.

9.IV.3 REGULATORY COMPLIANCE

There are no additional requirements for the HI-STORM 100 UVH.

CHAPTER 11.IV: OFF-NORMAL AND ACCIDENT EVENTS

11.IV.0 Introduction

In this chapter, the off-normal and accident events germane to the HI-STORM 100 UVH system are considered. Because no new MPC or transfer cask are introduced in Supplement IV, the off-normal and accident events applicable to them remain unchanged and therefore, are not required to be evaluated herein. Furthermore, events resulting from vent openings in the overpack are also not applicable for the ventless UVH overpack. Finally, a survey of the regulatory literature shows that the unvented overpack does not introduce any new off-normal or accident event of safety consequence. Therefore, the number of events that merit consideration in this chapter are vastly reduced. Those events that are applicable to the unvented overpack are evaluated in the following.

11.IV.1 Off-Normal Conditions

The applicable off-normal events are:

i. Elevated Off-normal environmental temperature – The off-normal ambient condition case of -40°F is important only for consideration of protection against brittle fracture for which the Storage System has been qualified in Chapter 3 and so stated in Chapter 11. This conclusion remains valid because the type of materials used and their thicknesses have not changed in Supplement IV.

11.IV.1.1[1] Off-Normal Environmental Temperature

The elevated off-normal temperature condition is evaluated against the off-normal condition temperature limit for the Storage system components listed in Table 2.IV.2.4.

11.IV.1.1.1 Postulated Cause of Off-Normal Environmental Temperature

The off-normal environmental temperature is postulated as a constant ambient temperature caused by extreme weather conditions. As in the main chapter, to determine the effects of the off-normal environmental temperature, it is conservatively assumed that these temperatures persist for a sufficient duration to allow the Storage System to achieve thermal equilibrium. Because of the large mass of the Storage System with its corresponding large thermal inertia and the limited duration for the off-normal temperatures, this assumption is conservative.

11.IV.1.1.2 Detection of Off-Normal Environmental Temperature

The analysis in Chapter 4.IV shows that the Storage System is designed to withstand the off-normal environmental temperatures without any effects on its ability to maintain safe storage conditions. Therefore, there is no safety imperative for detection of off-normal environmental temperatures.

11.IV.1.1.3 Analysis of Effects and Consequences of Off-Normal Environmental Temperature

- Structural: The rise in the ambient temperature will cause an increase in the cask cavity pressure as shown in Chapter 4.IV. The structural evaluations presented in Section 3.II.4.4 remain bounding as the computed temperatures and pressures under off-normal environmental temperature are bounded by those computed when the canisters are placed in the ventilated system (Section 4.IV.6.1).

- Thermal: Thermal analysis summarized in Chapter 4.IV shows that temperature of all components remains below their respective limits.

- Shielding: There is no effect on the shielding performance of the system as a result of this off-normal event.

[1] The numbering of the events follows that in the main chapter with the Roman numeral IV inserted to indicate that it is a part of the chapter.

- Criticality: There is no effect on the criticality control features of the system as a result of this off-normal event.
- Confinement: There is no effect on the confinement function rendered by the Storage System's MPC as a result of this off-normal event.
- Radiation Protection: Since there is no degradation in shielding or confinement capabilities of the Storage System, there is no effect on occupational or public exposures as a result of this off-normal event.

11.IV.1.1.4 Corrective Action

Because elevated ambient temperature is a natural event and does not impair the compliance of the Storage system with the acceptance criteria set forth in Supplement 2.IV, no remedial action is required.

11.IV.1.1.5 Radiological Impact

There is no radiological impact from the elevated ambient temperature on the Storage System.

Based on the above evaluation, it is concluded that the elevated off-normal temperature event does not affect the safe operation of the Storage System.

11.IV.2 Accident Events

The accident events germane to the introduction of the unvented overpack in the Storage System excerpted from Section 11.2 are summarized in Table 11.IV.2 where those requiring a detailed evaluation are shown in italicized text.

11.IV.2.1 Tip-Over

The freestanding HI-STORM 100UVH storage overpack, containing a loaded MPC, cannot tip-over as a result of postulated natural phenomenon events, including tornado wind, a tornado-generated missile, a seismic or a hydrological event (flood). However, to demonstrate the defense-in-depth features of the design, a *non-mechanistic* tip-over scenario per NUREG-1536 is evaluated (per Subsection 2.IV.2.1).

11.IV.2.1.1 Postulated Cause of Tip-Over

The tip-over accident is stipulated as a non-mechanistic accident because a credible mechanism for the cask to tip over cannot be identified. However, it is recognized that the mechanical loadings at a specific ISFSI may be sufficiently strong to cause a tip-over event, even though such a scenario is determined to be counterfactual under the Design Basis Loads (DBLs) treated in this FSAR. To enable the safety evaluation of a postulated tip-over scenario, it is necessary to set down an analysis methodology and the associated acceptance criteria. The methodology and acceptance criteria are presented in Section 3.IV.4 and a reference tip-over scenario is solved with reference pad properties listed in Table 2.IV.0.1. The reference tip-over problem corresponds to a free rotation of the overpack from the condition of rest at the incipient tipping point (i.e., C.G.-over-corner). The evaluations presented below refer to the above non-mechanistic tip-over scenario.

11.IV.2.1.2 Analysis of Effects and Consequences of Tip-Over

- Structural: The tip-over accident analysis evaluates the effects of the loaded overpack tipping-over onto a reinforced concrete pad. The tip-over analysis is provided in Section 3.II.4. The structural analysis demonstrates that the acceptance criteria for the basket panels in the active fuel region is met per Tables 2.II.2.4 (MPC-32M) and 2.III.4 (MPC-68M) and the MPC confinement boundary is not breached.

- Thermal: The thermal analysis of the overpack and MPC is based on vertical storage. The thermal consequences of this accident while the overpack is in the horizontal orientation are bounded by the burial under debris accident evaluated in Subsection 4.6.2. Damage to the overpack will be limited as discussed above. As the structural analysis demonstrates that there is no significant change in the MPC or overpack, once the overpack and MPC are returned to their vertical orientation there is no effect on the thermal performance of the system.

- Shielding: The tip-over accident could cause localized damage to the radial concrete shield and outer steel shell where the overpack impacts the surface. The overpack surface dose

rate in the affected area could increase due to the damage. However, there should be no noticeable increase in the ISFSI site boundary dose rate as a result of the localized damage on the side of the overpack.

The tip-over accident will also cause a re-orientation of the bottom of the overpack. As a result, radiation leaving the bottom of the overpack, which would normally be directed into the ISFSI pad, will be directed towards the horizon and the controlled area boundary. The dose rate at 100 meters from the bottom of the overpack, the minimum distance to the controlled area boundary, is calculated in Section 11.II.2.3 for the ventilated cask with the same baseplate thickness as that in Version UVH. The calculations are for an MPC loaded with the bounding content, for an assumed accident duration. The allowable decay heat (and source terms) in canisters allowed for storage in HI-STORM 100UVH is lower than that allowed in the same canisters when placed in a ventilated system. Therefore, the results presented in Section 11.II.2.3 remains bounding and demonstrate that the regulatory requirements of 10CFR72.106 are met.

- Criticality: There is no effect on the criticality control features of the system as a result of this event.

- Confinement: There is no effect on the confinement function of the MPC as a result of this event. As discussed in the structural evaluation above, all stresses remain within allowable values, assuring confinement boundary integrity.

- Radiation Protection: There is no effect on occupational or public exposures from radionuclide release as a result of this accident event since the confinement boundary integrity of the MPC remains intact.

  Immediately after the tip-over accident, a radiological inspection of the HI-STORM will be performed to determine the extent of the damage to the overpack and the contained MPC. Special handling procedures, including the use of temporary shielding, will be developed and approved by the ISFSI operator.

Depending on the strength of the concrete in the cask and the ISFSI pad, the impact from tip-over may cause some localized damage to the concrete and outer shell of the overpack in the local area of collision. However, there is no significant adverse effect on the structural, confinement, thermal, or criticality performance. Based on this evaluation, it is concluded that the accident does not affect the safe operation of the HI-STORM 100UVH System.

11.IV.2.1.3 Tip-Over Dose Calculations

The analysis of the tip-over accident has shown that the MPC confinement barrier will not be compromised and, therefore, there will be no release of radioactivity or increase in site-boundary dose rates from release of radioactivity.

The tip-over accident could cause localized damage to the radial concrete shield and outer steel shell where the overpack impacts the surface. The overpack surface dose rate in the affected area could increase due to the damage. However, there should be no noticeable increase in the ISFSI site or boundary dose rate as a result of the localized damage on the side of the overpack.

11.IV.2.1.4 Tip-Over Accident Corrective Action

Following a tip-over accident, the ISFSI operator shall first perform a radiological and visual inspection to determine the extent of the damage to the overpack. Special handling procedures, including the use of temporary shielding, will be developed and approved by the ISFSI operator.

If upon inspection of the MPC, structural damage of the MPC is observed, the structural damage shall be assessed and a determination shall be made if repairs will enable the MPC to return to service. If determined necessary, the MPC shall be returned to the facility for fuel unloading or transferred to either a HI-STAR or HI-STORM overpack in accordance with Chapter 8 for a duration that is determined to be appropriate. Likewise, the HI-STORM overpack shall be thoroughly inspected and a determination shall be made if repairs are required and will enable the HI-STORM overpack to return to service. Subsequent to the repairs, the equipment shall be inspected and appropriate tests shall be performed to certify the HI-STORM 100UVH System for service. If the equipment cannot be repaired and returned to service, the equipment shall be disposed of in accordance with the appropriate regulations.

11.IV.2.2 Design Basis Fire

The fire accident under on-the-pad storage is conservatively postulated in Subsection 4.IV.6. The acceptance criteria for the fire accident are provided in Supplement 2.IV.

11.IV.2.2.1 Postulated Cause of Design Basis Fire

Fire in the cask transporter visiting the ISFSI pad is a probable cause for fire.

11.IV.2.2.2 Analysis of Effects and Consequences of Fire

The thermal model described in Section 4.IV is utilized to quantify the effect of the Design Basis Fire. The transport vehicle fuel tank fire has been analyzed to evaluate the storage overpack heated by the incident thermal radiation and forced convection heat fluxes and to evaluate fuel cladding and MPC temperatures.

- Structural: There are no structural consequences as a result of the fire accident condition since the accident temperature limit of the concrete is not exceeded and all component temperatures remain within applicable temperature limits (Table 2.IV.2.4). The accident condition pressure evaluations for cask in Chapter 3.IV bound the fire accident condition. The MPC structural boundary remains within accident condition internal pressure and temperature limits.

- Thermal: Based on a conservative analysis discussed in Chapter 4.IV, it is concluded that the fire event does not significantly affect the temperature of the MPC or contained fuel. Furthermore, the ability of the Storage System to maintain cooling of the spent nuclear fuel within the ISG-11 Rev 3 temperature limits (Table 2.2.3) during and after fire is not compromised.

- Shielding: Because the shielding concrete remains below its accident temperature limit, there is no adverse effect on the shielding function of the system as a result of this event.

- Criticality: There is no effect on the criticality control features of the system as a result of this event.

- Confinement: There is no effect on the confinement function of the MPC as a result of this event since the structural integrity of the confinement boundary is unaffected.

- Radiation Protection: Since there is minimal reduction, if any, in the cask's shielding capacity and no effect on the confinement capabilities as discussed above, there is no effect on occupational or public exposures as a result of this accident event.

Based on the above evaluation, it is concluded that the overpack fire accident does not affect the safe operation of the Storage System.

11.IV.2.2.3 Fire Accident Dose Calculations

The high temperatures experienced by the HI-STORM overpack concrete are limited to the outermost layer and remain below the accident temperature limit. Therefore, there is no overall reduction in neutron shielding capabilities. The loaded HI-STORM overpack following a fire accident meets the accident dose rate requirement of 10CFR72.106.

The analysis of the fire accident shows that the MPC confinement boundary is not compromised and therefore, there is no release of airborne radioactive materials.

11.IV.2.2.4 Fire Accident Corrective Actions

Upon detection of a fire adjacent to a loaded HI-STORM overpack, the ISFSI operator shall take the appropriate immediate actions necessary to extinguish the fire. Fire fighting personnel should take appropriate radiological precautions. Following the termination of the fire, a visual and radiological inspection of the equipment shall be performed.

If damage to the HI-STORM storage overpack as the result of a fire event is widespread and/or as radiological conditions require, the MPC shall be removed from the HI-STORM overpack in accordance with Chapter 8. However, the thermal analysis described herein demonstrates that the radial concrete remains below its design temperature. The HI-STORM overpack may be returned to service if there is no significant increase in the measured dose rates (i.e., the overpack's shielding effectiveness is confirmed) and if the visual inspection is satisfactory.

11.IV.2.3 100% Fuel Rod Rupture

A discussion of this accident condition is presented in Subsection 11.2.9 of the main body of Chapter 11. A description of the cause of and corrective actions for this event is presented therein.

11.IV.2.3.1 Postulated Cause of 100% Fuel Rod Rupture

Through all credible accident conditions, the HI-STORM 100UVH System maintains the spent nuclear fuel in an inert environment while maintaining the peak fuel cladding temperature below the required short-term temperature limits, thereby providing assurance of fuel cladding integrity. There is no credible cause for 100% fuel rod rupture. This accident is postulated to evaluate the MPC confinement barrier for the maximum possible internal pressure based on the non-mechanistic failure of 100% of the fuel rods.

11.IV.2.3.2 Analysis of Effects and Consequences of 100% Fuel Rod Rupture

- Structural: The structural evaluation of the MPC for the accident condition internal pressure presented in Section 3.4 demonstrates that the MPC stresses are well within the allowable values.

- Thermal: A bounding MPC internal pressure for the 100% fuel rod rupture condition is presented in Table 4.IV.4.2. The design basis accident condition MPC internal pressure (Table 2.IV.2.3) used in the structural evaluation bounds the calculated value.

- Shielding: There is no effect on the shielding performance of the system as a result of this accident event.

- Criticality: There is no effect on the criticality control features of the system as a result of this accident event.

- Confinement: There is no effect on the confinement function of the MPC as a result of this accident event. As discussed in the structural evaluation above, all stresses remain within allowable values, assuring confinement boundary integrity.

- Radiation Protection: Since there is no degradation in shielding or confinement capabilities as discussed above, there is no effect on occupational or public exposures as a result of this accident event.

Based on this evaluation, it is concluded that the non-mechanistic 100% fuel rod rupture accident does not affect the safe operation of the HI-STORM 100U System.

11.IV.2.3.3 100% Fuel Rod Rupture Dose Calculations

The MPC confinement boundary maintains its integrity. There is no effect on the shielding effectiveness, and the magnitude of the radiation source is unchanged. However, the radiation source could redistribute within the sealed MPC cavity causing a slight change in the radiation dose rates at certain locations. Therefore, there is no release of radioactive material or significant increase in radiation dose rates.

11.IV.2.3.4 100% Fuel Rod Rupture Accident Corrective Action

As shown in the analysis of the 100% fuel rod rupture accident, the MPC confinement boundary is not damaged. The HI-STORM 100UVH System is designed to withstand this accident and continue performing the safe storage of spent nuclear fuel under normal storage conditions. No corrective actions are required.

11.IV.2.4 Burial-Under- Debris

The thermal consequences of burial-under-debris are presented in the Supplement Section 4.IV.6. The evaluation demonstrates that the peak fuel cladding temperature remains below the ISG-11 Rev 3 limit and the confinement function of the MPC is not compromised.

11.IV.2.5 Extreme Environmental Temperature

A discussion of this accident condition is presented in Subsection 11.2.15 of the main body of Chapter 11. A description of the cause of and corrective actions for this event is presented therein.

11.IV.2.5.1 Postulated Cause of Extreme Environmental Temperature

The extreme environmental temperature is postulated as a constant ambient temperature caused by extreme weather conditions. As in the main chapter, to determine the effects of the extreme environmental temperature, it is conservatively assumed that these temperatures persist for a sufficient duration to allow the Storage System to achieve thermal equilibrium. Because of the large mass of the Storage System with its corresponding large thermal inertia and the limited duration for the off-normal temperatures, this assumption is conservative.

11.IV.2.5.2 Analysis of Effects and Consequences of Extreme Environmental Temperature

- Structural: The structural evaluation of the MPC enclosure vessel for accident condition internal pressure bounds the pressure resulting from this event. Therefore, the resulting stresses from this event are bounded by the design-basis internal pressure and are well within the allowable values, as discussed in Section 3.4.

- Thermal: The resulting temperatures for the system and fuel assembly cladding are provided in evaluation performed in Subsection 4.IV.6. As concluded from this evaluation,

all temperatures are within the accident condition allowable values specified in Table 2.IV.2.4.

- Shielding: There is no effect on the shielding performance of the system as a result of this event, since the concrete temperature does not exceed the accident temperature limit specified in Table 2.IV.2.4.

- Criticality: There is no effect on the criticality control features of the system as a result of this accident event.

- Confinement: There is no effect on the confinement function of the MPC as a result of this event. As discussed in the structural evaluation above, all stresses remain within allowable values, assuring confinement boundary integrity.

- Radiation Protection: Since there is no degradation in shielding or confinement capabilities as discussed above, there is no effect on occupational or public exposures as a result of this event.

Based on this evaluation, it is concluded that the extreme environment temperature accident does not affect the safe operation of the HI-STORM 100UVH System.

11.IV.2.5.3 Extreme Environmental Temperature Dose Calculations

The extreme environmental temperature will not cause the concrete to exceed its design temperature. Therefore, there will be no degradation of the concrete's shielding effectiveness. The elevated temperatures will not cause a breach of the confinement system and the accident fuel cladding temperature is not exceeded. Therefore, there is no radiological impact on the HI-STORM 100UVH System for the extreme environmental temperature and the dose calculations are equivalent to the normal condition dose rates.

11.IV.2.5.4 Extreme Environmental Temperature Corrective Action

There are no consequences of this accident that require corrective action.

11.IV.2.6 Overpack Handling Accident

As described in Section 2.IV.2.3, lifting and handling of the Version UVH within Part 72 jurisdiction must be carried out using "Lifting Devices" or "Special Lifting Devices" qualified to "Single Failure Proof" criteria as defined in Section 2.II.2.7. As such, a handling accident of the Version UVH system is not credible.

TABLE 11.IV.1

ACCIDENT CONDITION EVENTS

Event	Location in the main report	Comment (Cases that are italicized have been determined to require complete evaluation which is provided in the subsections above)
Overpack handling accident	*11.2.2*	*Handling accident of the Version UVH system is not credible.*
Non-mechanistic tip-over	*11.2.3*	*The unvented overpack has the same lateral impact characteristics as the vented type. Therefore, the discussion in subsection 11.2.3 applies*
Design Basis Fire	*11.2.4*	*This condition requires additional evaluation because the unvented overpack is thermally more conductive and hence more responsive to fire.*
Tornado	11.2.6	The unvented overpack has improved tornado missile resistance in the absence of vent openings. Therefore, the safety justification in subsection 11.2.6 applies.
Design Basis Flood	11.2.7	A vulnerability in the vented models, the unvented overpack does not suffer from a deleterious scenario such as "smart flood". Furthermore, the heat rejection rate to the flood waters will be greater. Therefore, a flood event does not challenge the safety performance of the Storage System containing an unvented overpack.
Earthquake	11.2.8	The discussion and approach to deal with earthquake in Chapters 2, 3 and 11 applies to the unvented overpack-bearing storage system without any modification.
100% Fuel Rod Rupture	*11.2.9*	*This condition requires additional evaluation because the initial helium quantity inside the MPCs is different from the MPCs allowed for storage in the ventilated system.*
Confinement Boundary Leakage	11.2.10	The same MPCs allowed for storage in ventilated system are allowed for storage in unvented overpack. Therefore, confinement closures and any consideration of leakage discussed in Section 11.2.10 remains applicable without any modification.
Explosion	11.2.11	The discussion and approach to deal with an explosion event, discussed in subsection 11.2.11, applies to the unvented overpack-bearing storage system. In addition, the discussion in Section 2.I.2 regarding AEP is applicable.
Lightning	11.2.12	As discussed in subsection 11.2.12, lightning is an inconsequential event to the Storage System.
Burial-under-debris	*11.2.14*	*This condition requires additional evaluation to demonstrate compliance with design pressure limit of the overpack under this accident.*
Extreme Environmental Temperature	*11.2.15*	*This condition requires additional evaluation because the difference in ambient temperature under normal long-term storage and extreme condition is different from the MPCs allowed for storage in the ventilated system.*

SUPPLEMENT 12.IV: OPERATING CONTROLS AND LIMITS FOR THE HI-STORM 100 VERSION UVH

12.IV.0 Introduction

This chapter defines the operating controls and limits (i.e., Technical Specifications) including their supporting bases for deployment and storage of a HI-STORM 100 Version UVH at an ISFSI.

12.IV.1 Proposed Operating Controls and Limits

12.IV.1.1 This portion of the FSAR establishes the commitments regarding the HI-STORM 100 Version UVH and its use. Other 10CFR72 [12.1.2] and 10CFR20 [12.1.3] requirements in addition to the Technical Specifications may apply. The conditions for a general license holder found in 10CFR72.212 [12.1.2] shall be met by the licensee prior to loading spent fuel into the HI-STORM 100 System. The general license conditions governed by 10CFR72 [12.1.2] are not repeated with these Technical Specifications. Licensees are required to comply with all commitments and requirements.

12.IV.1.2 The Technical Specifications provided in Appendices A and C to CoC 72-1014 and the authorized contents and design features provided in Appendices B and D to CoC 72-1014 are primarily established to maintain subcriticality, confinement boundary and intact fuel cladding integrity, shielding and radiological protection, heat removal capability, and structural integrity under normal, off-normal and accident conditions. Table 12.IV.1.1 addresses each of these conditions respectively and identifies the appropriate Technical Specification(s) designed to control the condition. Table 12.IV.1.2 provides the list of Technical Specifications for the HI-STORM 100 Version UVH.

Table 12.IV.1.1

HI-STORM 100 Version UVH System Controls

Condition to be Controlled	Applicable Technical Specifications†
Criticality Control	3.3.1 Boron Concentration
Confinement Boundary and Intact Fuel Cladding Integrity	3.1.1 Multi-Purpose Canister (MPC)
Shielding and Radiological Protection	3.1.1 Multi-Purpose Canister (MPC) 3.1.2 Cavity Reflooding 3.2.1 TRANSFER CASK Surface Contamination 5.1 Radioactive Effluent Control Program 5.3 Radiation Protection Program
Heat Removal Capability	3.1.1 Multi-Purpose Canister (MPC)
Structural Integrity	5.2 Cask Transport Evaluation Program

† Technical Specifications are located in Appendix A and C to CoC 72-1014. Authorized contents are specified in FSAR Section 2.1.9 and 2.IV.1.

Table 12.IV.1.2

HI-STORM 100 Version UVH Technical Specifications

NUMBER	TECHNICAL SPECIFICATION
1.0	USE AND APPLICATION 1.1 Definitions 1.2 Logical Connectors 1.3 Completion Times 1.4 Frequency
2.0	Not Used
3.0	LIMITING CONDITION FOR OPERATION (LCO) APPLICABILITY SURVEILLANCE REQUIREMENT (SR) APPLICABILITY
3.1.1	Multi-Purpose Canister (MPC)
3.1.2	Cavity Reflooding
3.2.1	TRANSFER CASK Surface Contamination
3.3.1	Boron Concentration
Table 3-1	MPC Cavity Drying Limits
Table 3-2	MPC Helium Backfill Limits
4.0	Not Used
5.0	ADMINSTRATIVE CONTROLS
5.1	Radioactive Effluent Control Program for HI-STORM 100 Version UVH
5.2	Cask Transport Evaluation Program for HI-STORM 100 Version UVH
5.3	Radiation Protection Program

12.IV.2 Development of Operating Controls and Limits

Same as in the main body of Chapter 12 and in Supplement 12.II, with the HI-STORM 100 Version UVH replacing the HI-STORM 100 with the following exceptions.

12.IV.2.3 Functional and Operating Limits, Monitoring Instruments, and Limiting Control Settings

The discussion in Section 12.2.3 of the FSAR remains applicable to the Version UVH overpack with the exception of compliance to Technical Specification Limiting Condition for Operation (LCO) 3.1.2. This LCO is applicable to monitor the heat removal function of the HI-STORM 100 system. As the HI-STORM 100 Version UVH does not rely upon inlet and outlet vents for its means of heat removal, this LCO is not applicable.

12.IV.2.7 Design Features

This section describes HI-STORM 100 Version UVH System design features that are Important to Safety. These features require design controls and fabrication controls. The design features, detailed in this FSAR and in Appendices B and D to CoC 72-1014, are established in specifications and drawings that are controlled through the quality assurance program. Fabrication controls and inspections to assure that the HI-STORM 100 Version UVH is fabricated in accordance with the design drawings and the requirements of this FSAR are described in Supplement 9.IV.

12.IV.2.10 Verifying Compliance with Fuel Assembly Decay Heat, Burnup, and Cooling Time Limits

For the MPC-32M and MPC-68M canisters, the guidance provided in Paragraph 2.IV.1.1 is used to determine allowable fuel assembly decay heat loads. In addition, the equations described in Paragraph 2.IV.1.2 are used to determine allowable burnup and cooling time per storage location.

12.IV.2.11 Verifying Compliance with Total MPC Heat Load

The Version UVH overpack is permitted to store MPCs with restricted heat loads as described in Section 2.IV.1.

12.IV.3 Technical Specifications

Technical Specifications for the HI-STORM 100 Version UVH are provided in Appendices A and C to Certificate of Compliance 72-1014. Authorized Contents (i.e., fuel specifications) and Design Features are provided in Appendices B and D to CoC 72-1014. Bases applicable to the Technical Specifications are provided in FSAR Appendix 12.IV.A. The format and content of the HI-STORM 100 System Technical Specifications and Bases are that of the Improved Standard Technical Specifications for power reactors, to the extent they apply to a dry spent fuel storage cask system. NUMARC Document 93-03, "Writer's Guide for the Restructured Technical Specifications" [12.3.1] was used as a guide in the development of the Technical Specifications and Bases.

12.IV.4 Regulatory Evaluation

Table 12.IV.1.2 lists the Technical Specifications for the HI-STORM 100 Version UVH. The Technical Specifications are detailed in Appendices A and C to Certificate of Compliance 72-1014. The Authorized Contents (i.e., fuel specifications) and Design Features are provided in Appendices B and D to CoC 72-1014.

The conditions for use of the HI-STORM 100 Version UVH identify necessary Technical Specifications, limits on authorized contents (i.e., fuel), and cask design features to satisfy 10 CFR Part 72, and the applicable acceptance criteria have been satisfied. Compliance with these Technical specifications and other conditions of the Certificate of Compliance provides reasonable assurance that the HI-STORM 100 System will provide safe storage of spent fuel and is in compliance with 10 CFR Part 72, the regulatory guides, applicable codes and standards, and accepted practices.

12.IV.5 References

Same as in the main body of Chapter 12.

HI-STORM 100 SYSTEM FSAR

APPENDIX 12.IV.A

TECHNICAL SPECIFICATION BASES

FOR THE HOLTEC HI-STORM 100 VERSION UVH SPENT FUEL STORAGE CASK SYSTEM

BASES TABLE OF CONTENTS

B 3.0 LIMITING CONDITION FOR OPERATION (LCO) APPLICABILITY

BASES

LCOs

LCO 3.0.1, 3.0.2, 3.0.4, and 3.0.5 establish the general requirements applicable to all Specifications and apply at all times, unless otherwise stated.

LCO 3.0.1

LCO 3.0.1 establishes the Applicability statement within each individual Specification as the requirement for when the LCO is required to be met (i.e., when the facility is in the specified conditions of the Applicability statement of each Specification).

LCO 3.0.2

LCO 3.0.2 establishes that upon discovery of a failure to meet an LCO, the associated ACTIONS shall be met. The Completion Time of each Required Action for an ACTIONS Condition is applicable from the point in time that an ACTIONS Condition is entered. The Required Actions establish those remedial measures that must be taken within specified Completion Times when the requirements of an LCO are not met. This Specification establishes that:

a. Completion of the Required Actions within the specified Completion Times constitutes compliance with a Specification; and

b. Completion of the Required Actions is not required when an LCO is met within the specified Completion Time, unless otherwise specified.

There are two basic types of Required Actions. The first type of Required Action specifies a time limit in which the LCO must be met. This time limit is the Completion Time to restore a system or component or to restore variables to within specified limits. Whether stated as a Required Action or not, correction of the entered Condition is an action that may always be considered upon entering ACTIONS. The second type of Required Action specifies the

(continued)

BASES

LCO 3.0.2 (continued)

remedial measures that permit continued operation that is not further restricted by the Completion Time. In this case, compliance with the Required Actions provides an acceptable level of safety for continued operation.

Completing the Required Actions is not required when an LCO is met or is no longer applicable, unless otherwise stated in the individual Specifications.

The Completion Times of the Required Actions are also applicable when a system or component is removed from service intentionally. The reasons for intentionally relying on the ACTIONS include, but are not limited to, performance of Surveillances, preventive maintenance, corrective maintenance, or investigation of operational problems. Entering ACTIONS for these reasons must be done in a manner that does not compromise safety. Intentional entry into ACTIONS should not be made for operational convenience.

LCO 3.0.3

This specification is not applicable to a dry storage cask system because it describes conditions under which a power reactor must be shut down when an LCO is not met and an associated ACTION is not met or provided. The placeholder is retained for consistency with the power reactor technical specifications.

LCO 3.0.4

LCO 3.0.4 establishes limitations on changes in specified conditions in the Applicability when an LCO is not met. It precludes placing the HI-STORM 100 Version UVH System in a specified condition stated in that Applicability (e.g., Applicability desired to be entered) when the following exist:

a. Facility conditions are such that the requirements of the LCO would not be met in the Applicability desired to be entered; and

b. Continued noncompliance with the LCO requirements, if the Applicability were entered, would result in being required to

(continued)

BASES

LCO 3.0.4 (continued)

exit the Applicability desired to be entered to comply with the Required Actions.

Compliance with Required Actions that permit continuing with dry fuel storage activities for an unlimited period of time in a specified condition provides an acceptable level of safety for continued operation. This is without regard to the status of the dry storage system. Therefore, in such cases, entry into a specified condition in the Applicability may be made in accordance with the provisions of the Required Actions. The provisions of this Specification should not be interpreted as endorsing the failure to exercise the good practice of restoring systems or components before entering an associated specified condition in the Applicability.

The provisions of LCO 3.0.4 shall not prevent changes in specified conditions in the Applicability that are required to comply with ACTIONS. In addition, the provisions of LCO 3.0.4 shall not prevent changes in specified conditions in the Applicability that are related to the unloading of an SFSC.

Exceptions to LCO 3.0.4 are stated in the individual Specifications. Exceptions may apply to all the ACTIONS or to a specific Required Action of a Specification.

LCO 3.0.5

LCO 3.0.5 establishes the allowance for restoring equipment to service under administrative controls when it has been removed from service or determined to not meet the LCO to comply with the ACTIONS. The sole purpose of this Specification is to provide an exception to LCO 3.0.2 (e.g., to not comply with the applicable Required Action(s)) to allow the performance of testing to demonstrate:

a. The equipment being returned to service meets the LCO; or

b. Other equipment meets the applicable LCOs.

(continued)

BASES

LCO 3.0.5 (continued)

The administrative controls ensure the time the equipment is returned to service in conflict with the requirements of the ACTIONS is limited to the time absolutely necessary to perform the allowed testing. This Specification does not provide time to perform any other preventive or corrective maintenance.

B 3.0 SURVEILLANCE REQUIREMENT (SR) APPLICABILITY

BASES

SRs

SR 3.0.1 through SR 3.0.4 establish the general requirements applicable to all Specifications and apply at all times, unless otherwise stated.

SR 3.0.1

SR 3.0.1 establishes the requirement that SRs must be met during the specified conditions in the Applicability for which the requirements of the LCO apply, unless otherwise specified in the individual SRs. This Specification is to ensure that Surveillances are performed to verify that systems and components meet the LCO and variables are within specified limits. Failure to meet a Surveillance within the specified Frequency, in accordance with SR 3.0.2, constitutes a failure to meet an LCO.

Systems and components are assumed to meet the LCO when the associated SRs have been met. Nothing in this Specification, however, is to be construed as implying that systems or components meet the associated LCO when:

a. The systems or components are known to not meet the LCO, although still meeting the SRs; or

b. The requirements of the Surveillance(s) are known to be not met between required Surveillance performances.

Surveillances do not have to be performed when the HI-STORM 100 Version UVH System is in a specified condition for which the requirements of the associated LCO are not applicable, unless otherwise specified.

Surveillances, including Surveillances invoked by Required Actions, do not have to be performed on equipment that has been determined to not meet the LCO because the ACTIONS define the remedial measures that apply. Surveillances have to be met and performed in accordance with SR 3.0.2, prior to returning equipment to service. Upon completion of maintenance, appropriate post-maintenance testing is required. This includes ensuring applicable Surveillances

(continued)

BASES

SR 3.0.1 (continued)

are not failed and their most recent performance is in accordance with SR 3.0.2. Post maintenance testing may not be possible in the current specified conditions in the Applicability due to the necessary dry storage cask system parameters not having been established. In these situations, the equipment may be considered to meet the LCO provided testing has been satisfactorily completed to the extent possible and the equipment is not otherwise believed to be incapable of performing its function. This will allow dry fuel storage activities to proceed to a specified condition where other necessary post maintenance tests can be completed.

SR 3.0.2

SR 3.0.2 establishes the requirements for meeting the specified Frequency for Surveillances and any Required Action with a Completion Time that requires the periodic performance of the Required Action on a "once per..." interval.

SR 3.0.2 permits a 25% extension of the interval specified in the Frequency. This extension facilitates Surveillance scheduling and considers facility conditions that may not be suitable for conducting the Surveillance (e.g., transient conditions or other ongoing Surveillance or maintenance activities).

The 25% extension does not significantly degrade the reliability that results from performing the Surveillance at its specified Frequency. This is based on the recognition that the most probable result of any particular Surveillance being performed is the verification of conformance with the SRs. The exceptions to SR 3.0.2 are those Surveillances for which the 25% extension of the interval specified in the Frequency does not apply. These exceptions are stated in the individual Specifications as a Note in the Frequency stating, "SR 3.0.2 is not applicable."

As stated in SR 3.0.2, the 25% extension also does not apply to the initial portion of a periodic Completion Time that requires performance on a "once per..." basis. The 25% extension applies to each performance after the initial performance. The initial performance of the Required Action, whether it is a particular Surveillance or some other remedial action, is considered a single action with a single Completion Time. One reason for not allowing the 25% extension

(continued)

BASES

SR 3.0.2 (continued)

to this Completion Time is that such an action usually verifies that no loss of function has occurred by checking the status of redundant or diverse components or accomplishes the function of the affected equipment in an alternative manner.

The provisions of SR 3.0.2 are not intended to be used repeatedly merely as an operational convenience to extend Surveillance intervals or periodic Completion Time intervals beyond those specified.

SR 3.0.3

SR 3.0.3 establishes the flexibility to defer declaring affected equipment as not meeting the LCO or an affected variable outside the specified limits when a Surveillance has not been completed within the specified Frequency. A delay period of up to 24 hours or up to the limit of the specified Frequency, whichever is less, applies from the point in time that it is discovered that the Surveillance has not been performed in accordance with SR 3.0.2, and not at the time that the specified Frequency was not met.

This delay period provides adequate time to complete Surveillances that have been missed. This delay period permits the completion of a Surveillance before complying with Required Actions or other remedial measures that might preclude completion of the Surveillance.

The basis for this delay period includes consideration of HI-STORM 100 Version UVH System conditions, adequate planning, availability of personnel, the time required to perform the Surveillance, the safety significance of the delay in completing the required Surveillance, and the recognition that the most probable result of any particular Surveillance being performed is the verification of conformance with the requirements. When a Surveillance with a Frequency based not on time intervals, but upon specified facility conditions, is discovered not to have been performed when specified, SR 3.0.3 allows the full delay period of 24 hours to perform the Surveillance.

SR 3.0.3 also provides a time limit for completion of Surveillances that become applicable as a consequence of changes in the specified conditions in the Applicability imposed by the Required Actions.

(continued)

BASES

SR 3.0.3 (continued)

Failure to comply with specified Frequencies for SRs is expected to be an infrequent occurrence. Use of the delay period established by SR 3.0.3 is a flexibility which is not intended to be used as an operational convenience to extend Surveillance intervals.

If a Surveillance is not completed within the allowed delay period, then the equipment is considered to not meet the LCO or the variable is considered outside the specified limits and the Completion Times of the Required Actions for the applicable LCO Conditions begin immediately upon expiration of the delay period. If a Surveillance is failed within the delay period, then the equipment does not meet the LCO, or the variable is outside the specified limits and the Completion Times of the Required Actions for the applicable LCO Conditions begin immediately upon the failure of the Surveillance.

Completion of the Surveillance within the delay period allowed by this Specification, or within the Completion Time of the ACTIONS, restores compliance with SR 3.0.1.

SR 3.0.4

SR 3.0.4 establishes the requirement that all applicable SRs must be met before entry into a specified condition in the Applicability.

This Specification ensures that system and component requirements and variable limits are met before entry into specified conditions in the Applicability for which these systems and components ensure safe conduct of dry fuel storage activities.

The provisions of this Specification should not be interpreted as endorsing the failure to exercise the good practice of restoring systems or components before entering an associated specified condition in the Applicability.

However, in certain circumstances, failing to meet an SR will not result in SR 3.0.4 restricting a change in specified condition. When a system, subsystem, division, component, device, or variable is

(continued)

BASES

SR 3.0.4 (continued)

outside its specified limits, the associated SR(s) are not required to be performed per SR 3.0.1, which states that Surveillances do not have to be performed on equipment that has been determined to not meet the LCO. When equipment does not meet the LCO, SR 3.0.4 does not apply to the associated SR(s) since the requirement for the SR(s) to be performed is removed. Therefore, failing to perform the Surveillance(s) within the specified Frequency does not result in an SR 3.0.4 restriction to changing specified conditions of the Applicability. However, since the LCO is not met in this instance, LCO 3.0.4 will govern any restrictions that may (or may not) apply to specified condition changes.

The provisions of SR 3.0.4 shall not prevent changes in specified conditions in the Applicability that are required to comply with ACTIONS. In addition, the provisions of LCO 3.0.4 shall not prevent changes in specified conditions in the Applicability that are related to the unloading of an SFSC.

The precise requirements for performance of SRs are specified such that exceptions to SR 3.0.4 are not necessary. The specific time frames and conditions necessary for meeting the SRs are specified in the Frequency, in the Surveillance, or both. This allows performance of Surveillances when the prerequisite condition(s) specified in a Surveillance procedure require entry into the specified condition in the Applicability of the associated LCO prior to the performance or completion of a Surveillance. A Surveillance that could not be performed until after entering the LCO Applicability would have its Frequency specified such that it is not "due" until the specific conditions needed are met. Alternately, the Surveillance may be stated in the form of a Note as not required (to be met or performed) until a particular event, condition, or time has been reached. Further discussion of the specific formats of SRs' annotation is found in Section 1.4, Frequency.

B 3.1 SFSC Integrity

B 3.1.1 Multi-Purpose Canister (MPC)

BASES

BACKGROUND

A TRANSFER CASK with an empty MPC is placed in the spent fuel pool and loaded with fuel assemblies meeting the requirements of the CoC. A lid is then placed on the MPC. The TRANSFER CASK and MPC are raised to the top of the spent fuel pool surface. The TRANSFER CASK and MPC are then moved into the cask preparation area where the MPC lid is welded to the MPC shell and the welds are inspected and tested. The water is drained from the MPC cavity and drying is performed. The MPC cavity is backfilled with helium. Then, the MPC vent and drain port cover plates and closure ring are installed and welded. Inspections are performed on the welds. MPC cavity moisture removal using vacuum drying or forced helium dehydration is performed to remove residual moisture from the MPC cavity space after the MPC has been drained of water. If vacuum drying is used, any water that has not drained from the fuel cavity evaporates from the fuel cavity due to the vacuum. This is aided by the temperature increase due to the decay heat of the fuel and by the heat added to the MPC from the optional warming pad, if used.

If forced helium dehydration is used, the dry gas introduced to the MPC cavity through the vent or drain port absorbs the residual moisture in the MPC. This humidified gas exits the MPC via the other port and the absorbed water is removed through condensation and/or mechanical drying. The dried helium is then forced back to the MPC until the temperature acceptance limit is met.

After the completion of drying, the MPC cavity is backfilled with helium meeting the requirements of the CoC.

(continued)

BASES

BACKGROUND (continued)

Backfilling of the MPC fuel cavity with helium promotes gaseous heat dissipation and the inert atmosphere protects the fuel cladding. Backfilling the MPC with helium in the required quantity eliminates air inleakage over the life of the MPC because the cavity pressure rises due to heat up of the confined gas by the fuel decay heat during storage.

APPLICABLE SAFETY ANALYSIS

The confinement of radioactivity during the storage of spent fuel in the MPC is ensured by the multiple confinement boundaries and systems. The barriers relied on are the fuel pellet matrix, the metallic fuel cladding tubes in which the fuel pellets are contained, and the MPC in which the fuel assemblies are stored. Long-term integrity of the fuel and cladding depend on storage in an inert atmosphere. This is accomplished by removing water from the MPC and backfilling the cavity with an inert gas. The thermal analyses of the MPC assume that the MPC cavity is filled with dry helium of a minimum quantity to ensure the assumptions used for convection heat transfer are preserved. Keeping the backfill pressure below the maximum value preserves the initial condition assumptions made in the MPC overpressurization evaluation.

(continued)

BASES (continued)

LCO

A dry, helium filled and sealed MPC establishes an inert heat removal environment necessary to ensure the integrity of the multiple confinement boundaries. Moreover, it also ensures that there will be no air in-leakage into the MPC cavity that could damage the fuel cladding over the storage period.

APPLICABILITY

The dry, sealed and inert atmosphere is required to be in place during TRANSPORT OPERATIONS and STORAGE OPERATIONS to ensure both the confinement barriers and heat removal mechanisms are in place during these operating periods. These conditions are not required during LOADING OPERATIONS or UNLOADING OPERATIONS as these conditions are being established or removed, respectively during these periods in support of other activities being performed with the stored fuel.

ACTIONS

A note has been added to the ACTIONS which states that, for this LCO, separate Condition entry is allowed for each MPC. This is acceptable since the Required Actions for each Condition provide appropriate compensatory measures for each MPC not meeting the LCO. Subsequent MPCs that do not meet the LCO are governed by subsequent Condition entry and application of associated Required Actions.

A.1

If the cavity vacuum drying pressure or demoisturizer exit gas temperature limit has been determined not to be met during TRANSPORT OPERATIONS or STORAGE OPERATIONS, an engineering evaluation is necessary to determine the potential quantity of moisture left within the MPC cavity. Since moisture remaining in the cavity during these modes of operation may represent a long-term degradation concern, immediate action is not necessary. The Completion Time is sufficient to complete the engineering evaluation commensurate with the safety significance of the CONDITION.

(continued)

BASES

ACTIONS
(continued)

A.2

Once the quantity of moisture potentially left in the MPC cavity is determined, a corrective action plan shall be developed and actions initiated to the extent necessary to return the MPC to an analyzed condition. Since the quantity of moisture estimated under Required Action A.1 can range over a broad scale, different recovery strategies may be necessary. Since moisture remaining in the cavity during these modes of operation may represent a long-term degradation concern, immediate action is not necessary. The Completion Time is sufficient to develop and initiate the corrective actions commensurate with the safety significance of the CONDITION.

B.1

If the MPC cavity vacuum drying acceptance criterion is not met during the allowable time, the Required Action ensures a sufficient quantity of helium within the MPC cavity to provide additional margin to the PCT limits. The Completion Time is sufficient to complete the corrective action commensurate with the safety significance of the CONDITION.

(continued)

ACTIONS
(continued)

C.1

If the helium backfill quantity limit has been determined not to be met during TRANSPORT OPERATIONS or STORAGE OPERATIONS, an engineering evaluation is necessary to determine the quantity of helium within the MPC cavity. Since too much or too little helium in the MPC during these modes represents a potential overpressure or heat removal degradation concern, an engineering evaluation shall be performed in a timely manner. The Completion Time is sufficient to complete the engineering evaluation commensurate with the safety significance of the CONDITION.

C.2

Once the quantity of helium in the MPC cavity is determined, a corrective action plan shall be developed and initiated to the extent necessary to return the MPC to an analyzed condition either by adding or removing helium or by demonstrating through analysis that all cask system limits will continue to be met. Since the quantity of helium estimated under Required Action C.1 can range over a broad scale, different recovery strategies may be necessary. Since elevated or reduced helium quantities existing in the MPC cavity represent a potential overpressure or heat removal degradation concern, corrective actions should be developed and implemented in a timely manner. The Completion Time is sufficient to develop and initiate the corrective actions commensurate with the safety significance of the CONDITION.

(continued)

BASES

ACTIONS
(continued)

D.1

If the helium leak rate limit has been determined not to be met during TRANSPORT OPERATIONS or STORAGE OPERATIONS, an engineering evaluation is necessary to determine the impact of increased helium leak rate on heat removal and off-site dose. Since an increased helium leak rate represents a potential challenge to MPC heat removal and the off-site doses, reasonably rapid action is warranted. The Completion Time is sufficient to complete the engineering evaluation commensurate with the safety significance of the CONDITION.

D.2

Once the consequences of the elevated leak rate from the MPC are determined, a corrective action plan shall be developed and initiated to the extent necessary to return the MPC to an analyzed condition. Since the recovery mechanisms can range over a broad scale based on the evaluation performed under Required Action C.1, different recovery strategies may be necessary. Since an elevated helium leak rate represents a challenge to heat removal rates and offsite doses, reasonably rapid action is required. The Completion Time is sufficient to develop and initiate the corrective actions commensurate with the safety significance of the CONDITION.

(continued)

BASES

ACTIONS
(continued)

E.1

If the MPC fuel cavity cannot be successfully returned to a safe, analyzed condition, the fuel must be placed in a safe condition in the spent fuel pool. The Completion Time is reasonable based on the time required to replace the transfer lid with the pool lid (if required), perform fuel cooldown operations (if required), re-flood the MPC, cut the MPC lid welds, move the TRANSFER CASK into the spent fuel pool, remove the MPC lid, and remove the spent fuel assemblies in an orderly manner and without challenging personnel.

BASES

SURVEILLANCE REQUIREMENTS

SR 3.1.1.1 , SR 3.1.1.2, and SR 3.1.1.3

The long-term integrity of the stored fuel is dependent on storage in a dry, inert environment. Cavity dryness may be demonstrated either by evacuating the cavity to a very low absolute pressure and verifying that the pressure is held over a specified period of time or by recirculating dry helium through the MPC cavity to absorb moisture until the gas temperature or dew point at the specified location reaches and remains below the acceptance limit for the specified time period. A low vacuum pressure or a demoisturizer exit temperature meeting the acceptance limit is an indication that the cavity is dry.

Table 3-1 of Appendices A and C to the CoC provide the appropriate requirements for drying the MPC cavity based on the applicable short-term temperature limit. The temperature limits are consistent with the guidance in NRC Interim Staff Guidance (ISG) Document 11.

Having the proper quantity of helium in the MPC ensures adequate heat transfer from the fuel to the fuel basket and surrounding structure of the MPC and precludes any overpressure event from challenging the normal, off-normal, or accident design pressure of the MPC.

Meeting the helium leak rate limit ensures there is adequate helium in the MPC for long term storage and that there is no credible effluent dose from the cask.

MPCs that utilize the redundant port cover design exhibit increased confinement boundary reliability. Each port cover plate is subjected to NDE to ensure the absence of porosity in the material and is welded to the MPC lid in the same manner as in the non-redundant design. Each cover plate weld is subjected to similar NDE acceptance criteria, where successful NDE will verify the associated weld's integrity to maintain the MPC confinement boundary. As such, this surveillance does not need to be performed for MPCs that utilize the redundant port cover design.

(continued)

BASES

SURVEILLANCE REQUIREMENTS

SR 3.1.1.1, SR 3.1.1.2 , and SR 3.1.1.3 (continued)

All of these surveillances must be successfully performed once, prior to TRANSPORT OPERATIONS to ensure that the conditions are established for SFSC storage which preserve the analysis basis supporting the cask design.

REFERENCES

1. FSAR Sections 1.2, 4.4, 4.5, 7.2, 7.3, 8.1 and 1.IV.2.
2. Interim Staff Guidance Document 11
3. Interim Staff Guidance Document 18

B 3.1 SFSC Integrity

B 3.1.2 MPC Cavity Reflooding

BASES

BACKGROUND

In the event that an MPC must be unloaded, the TRANSFER CASK with its enclosed MPC is returned to the cask preparation area to begin the process of fuel unloading. The MPC closure ring, and vent and drain port cover plates are removed. The MPC gas is sampled to determine the integrity of the spent fuel cladding. The pressure in the MPC cavity is ensured to be less than the 100 psig design pressure for the MPC-68M or 110 psig design pressure for the MPC-32M. This is accomplished via direct measurement of the MPC gas pressure or via analysis.

After ensuring the MPC cavity pressure meets the LCO limit, the MPC is then re-flooded with water at a controlled rate and/or the pressure monitored to ensure that the pressure remains below 100 psig for the MPC-68M or 110 psig for the MPC-32M. Once the cavity is filled with water, the MPC lid weld is removed leaving the MPC lid in place. The transfer cask and MPC are placed in the spent fuel pool and the MPC lid is removed. The fuel assemblies are removed from the MPC and the MPC and transfer cask are removed from the spent fuel pool and decontaminated.

Ensuring that the MPC cavity pressure is less than the LCO limit ensures that any steam produced within the cavity is safely vented to an appropriate location and eliminates the risk of high MPC pressure due to sudden generation of large steam quantities during re-flooding.

(continued)

BASES (continued)

APPLICABLE SAFETY ANALYSIS	The confinement of radioactivity during the storage of spent fuel in the MPC is ensured by the multiple confinement boundaries and systems. The barriers relied on are the fuel pellet matrix, the metallic fuel cladding tubes in which the fuel pellets are contained, and the MPC in which the fuel assemblies are stored. Standard practice in the dry cask industry has historically been to directly reflood the cask with water. This standard practice is known not to induce fuel cladding failures. The integrity of the MPC depends on maintaining the internal cavity pressures within design limits. This is accomplished by introducing water to the cavity in a controlled manner such that there is no sudden formation of large quantities of steam during MPC re-flooding. (Ref. 1).
LCO	Determining the MPC cavity pressure prior to and during re-flooding ensures that there will be sufficient venting of any steam produced to avoid excessive MPC pressurization.
APPLICABILITY	The MPC cavity pressure is controlled during UNLOADING OPERATIONS after the transfer cask and integral MPC are back in the FUEL BUILDING and are no longer suspended from, or secured in, the transporter. Therefore, the Cask Reflood LCO does not apply during TRANSPORT OPERATIONS and STORAGE OPERATIONS. A note has been added to the APPLICABILITY for this LCO which states that the LCO is only applicable during wet UNLOADING OPERATIONS. This is acceptable since the intent of the LCO is to avoid uncontrolled MPC pressurization due to water flashing during re-flooding operations. This is not a concerning for dry UNLOADING OPERATIONS.

(continued)

BASES (continued)

ACTIONS

A note has been added to the ACTIONS which states that, for this LCO, separate Condition entry is allowed for each MPC. This is acceptable since the Required Actions for each Condition provide appropriate compensatory measures for each MPC not meeting the LCO. Subsequent MPCs that do not meet the LCO are governed by subsequent Condition entry and application of associated Required Actions.

A.1 and A.2

If the MPC cavity pressure limit is not met, actions must be taken to restore the parameters to within the limits before initiating or continuing re-flooding the MPC.

Immediately is an appropriate Completion Time because it requires action to be initiated promptly and completed without delay, but does not establish any particular fixed time limit for completing the action. This offers the flexibility necessary for users to plan and implement any necessary work activities commensurate with the safety significance of the condition, which is governed by the MPC heat load.

SURVEILLANCE REQUIREMENTS

SR 3.1.2.1

The integrity of the MPC is dependent on controlling the internal MPC pressure. By controlling the MPC internal pressure prior to and during re-flooding the MPC there is sufficient steam venting capacity during MPC re-flooding.

The LCO must be met on each SFSC before the initiation of MPC re-flooding operations to ensure the design and analysis basis are preserved. If the re-flood rate is limited to the bounding value given in FSAR Section 4.5 and 4.II.5 for the MPC-68M and MPC-32M, respectively, or calculated specifically for the MPC heat load then the MPC pressure must only be verified once prior to the re-flood.

If verifying the MPC pressure using direct measurement only the SR requires checks prior to the re-flood and every hour during re-flood. The direct measurement schedule is sufficient to prevent overpressurization of the MPC cavity as the rate of pressure rise is relatively slow compared to increase in re-flood rate.

BASES (continued)

(continued)

REFERENCES 1. FSAR, Section 4.5, 4.II.5, 8.3.2 and 8.3.3.

B 3.2 SFSC Radiation Protection

B 3.2.1 TRANSFER CASK Surface Contamination

BASES

BACKGROUND

A TRANSFER CASK is immersed in the spent fuel pool in order to load the spent fuel assemblies. As a result, the surface of the TRANSFER CASK may become contaminated with the radioactive material in the spent fuel pool water. This contamination is removed prior to moving the TRANSFER CASK to the ISFSI, or prior to transferring the MPC into the OVERPACK, whichever occurs first, in order to minimize the radioactive contamination to personnel or the environment. This allows dry fuel storage activities to proceed without additional radiological controls to prevent the spread of contamination and reduces personnel dose due to the spread of loose contamination or airborne contamination. This is consistent with ALARA practices.

APPLICABLE SAFETY ANALYSIS

The radiation protection measures implemented during MPC transfer and transportation using the TRANSFER CASK are based on the assumption that the exterior surfaces of the TRANSFER CASKs have been decontaminated. Failure to decontaminate the surfaces of the TRANSFER CASKs could lead to higher-than-projected occupational doses.

LCO

Removable surface contamination on the TRANSFER CASK exterior surfaces and accessible surfaces of the MPC is limited to 1000 dpm/100 cm^2 from beta and gamma sources and 20 dpm/100 cm^2 from alpha sources. These limits are taken from the guidance in IE Circular 81-07 (Ref. 2) and are based on the minimum level of activity that can be routinely detected under a surface contamination control program using direct survey methods. Only loose contamination is controlled, as fixed contamination will not result from the TRANSFER CASK loading process.

(continued)

BASES

LCO (continued)

Experience has shown that these limits are low enough to prevent the spread of contamination to clean areas and are significantly less than the levels which would cause significant personnel skin dose. LCO 3.2.1 requires removable contamination to be within the specified limits for the exterior surfaces of the TRANSFER CASK and accessible portions of the MPC. The location and number of surface swipes used to determine compliance with this LCO are determined based on standard industry practice and the user's plant-specific contamination measurement program for objects of this size. Accessible portions of the MPC means the upper portion of the MPC external shell wall accessible after the inflatable annulus seal is removed and before the annulus shield ring is installed. The user shall determine a reasonable number and location of swipes for the accessible portion of the MPC. The objective is to determine a removable contamination value representative of the entire upper circumference of the MPC, while implementing sound ALARA practices.

APPLICABILITY

The applicability is modified by a note that states that the LCO is not applicable to the TRANSFER CASK if MPC transfer operations occur inside the FUEL BUILDING. This is consistent with the intent of this LCO, which is to ensure loose contamination on the loaded TRANSFER CASK and MPC outside the FUEL BUILDING is within limits. If the MPC transfer is performed inside the FUEL BUILDING, the empty TRANSFER CASK remains behind and is treated like any other contaminated hardware under the user's Part 50 contamination control program.

Verification that the surface contamination is less than the LCO limit is performed during LOADING OPERATIONS. This occurs before TRANSPORT OPERATIONS, when the LCO is applicable. Measurement of surface contamination is unnecessary during UNLOADING OPERATIONS as surface contamination would have been measured prior to moving the subject TRANSFER CASK to the ISFSI.

(continued)

BASES (continued)

ACTIONS

A note has been added to the ACTIONS which states that, for this LCO, separate Condition entry is allowed for each TRANSFER CASK. This is acceptable since the Required Actions for each Condition provide appropriate compensatory measures for each TRANSFER CASK not meeting the LCO. Subsequent TRANSFER CASKs that do not meet the LCO are governed by subsequent Condition entry and application of associated Required Actions.

A.1

If the removable surface contamination of a TRANSFER CASK or MPC, as applicable, that has been loaded with spent fuel is not within the LCO limits, action must be initiated to decontaminate the TRANSFER CASK or MPC and bring the removable surface contamination within limits. The Completion Time of 7 days is appropriate given that sufficient time is needed to prepare for, and complete the decontamination once the LCO is determined not to be met.

SURVEILLANCE REQUIREMENTS

SR 3.2.2.1

This SR verifies that the removable surface contamination on the TRANSFER CASK and/or accessible portions of the MPC is less than the limits in the LCO. The Surveillance is performed using smear surveys to detect removable surface contamination. The Frequency requires performing the verification during LOADING OPERATIONS in order to confirm that the TRANSFER CASK or OVERPACK can be moved to the ISFSI without spreading loose contamination.

REFERENCES

1. FSAR Sections 8.1.5 and 8.1.6.
2. NRC IE Circular 81-07.

B 3.3 SFSC Criticality Control

B 3.3.1 Boron Concentration

BASES

BACKGROUND

A TRANSFER CASK with an empty MPC is placed in the spent fuel pool and loaded with fuel assemblies meeting the requirements of the Certificate of Compliance. A lid is then placed on the MPC. The TRANSFER CASK and MPC are raised to the top of the spent fuel pool surface. The TRANSFER CASK and MPC are then moved into the cask preparation area where the MPC lid is welded to the MPC shell and the welds are inspected and tested. The water is drained from the MPC cavity and drying is performed. The MPC cavity is backfilled with helium. Then, the MPC vent and drain cover plates and closure ring are installed and welded. Inspections are performed on the welds. The TRANSFER CASK bottom pool lid is replaced with the transfer lid to allow eventual transfer of the MPC into the OVERPACK.

For those MPCs containing PWR fuel assemblies of relatively high initial enrichment, credit is taken in the criticality analyses for boron in the water within the MPC. To preserve the analysis basis, users must verify that the boron concentration of the water in the MPC meets specified limits when there is fuel and water in the MPC. This may occur during LOADING OPERATIONS and UNLOADING OPERATIONS.

APPLICABLE SAFETY ANALYSIS

The spent nuclear fuel stored in the SFSC is required to remain subcritical (k_{eff} < 0.95) under all conditions of storage. The HI-STORM 100 Version UVH SFSC is analyzed to store a wide variety of spent nuclear fuel assembly types with differing initial enrichments. For all PWR fuel loaded in the MPC-32M, credit was taken in the criticality analyses for neutron poison in the form of soluble boron in the water within the MPC. Compliance with this LCO preserves the assumptions made in the criticality analyses regarding credit for soluble boron.

(continued)

BASES (continued)

LCO

Compliance with this LCO ensures that the stored fuel will remain subcritical with a $k_{eff} \leq 0.95$ while water is in the MPC.

LCO 3.3.1.a provides the minimum concentration of soluble boron required in the MPC water for the MPC-32M based on the fuel assembly array/class and the classification of the fuel as a DAMAGED FUEL ASSEMBLY or FUEL DEBRIS. Tables 3-4, 3-5, and 3-6 of Appendix C provide the minimum required soluble boron content for MPC-32M based on configurations laid out in Appendix D of 2.4-1.

All fuel assemblies loaded into the MPC-32M are limited by analysis to maximum enrichments of 5.0 wt.% U-235.

The LCO also requires that the minimum soluble boron concentration for the most limiting fuel assembly array/class and classification to be stored in the same MPC be used. This means that the highest minimum soluble boron concentration limit for all fuel assemblies in the MPC applies in cases where fuel assembly array/classes and fuel classifications (intact vs. damaged) are mixed in the same MPC. This ensures the assumptions pertaining to soluble boron used in the criticality analyses are preserved.

(continued)

BASES

APPLICABILITY

The boron concentration LCO is applicable whenever an MPC-32M has at least one PWR fuel assembly in a storage location and water in the MPC.

During LOADING OPERATIONS, the LCO is applicable immediately upon the loading of the first fuel assembly in the MPC. It remains applicable until the MPC is drained of water.

During UNLOADING OPERATIONS, the LCO is applicable when the MPC is re-flooded with water after helium cooldown operations. Note that compliance with SR 3.0.4 assures that the water to be used to flood the MPC is of the correct boron concentration to ensure the LCO is upon entering the Applicability.

ACTIONS

A note has been added to the ACTIONS which states that, for this LCO, separate Condition entry is allowed for each MPC. This is acceptable since the Required Actions for each Condition provide appropriate compensatory measures for each MPC not meeting the LCO. Subsequent MPCs that do not meet the LCO are governed by subsequent Condition entry and application of associated Required Actions.

A.1 and A.2

Continuation of LOADING OPERATIONS, UNLOADING OPERATIONS or positive reactivity additions (including actions to reduce boron concentration) is contingent upon maintaining the SFSC in compliance with the LCO. If the boron concentration of water in the MPC is less than its limit, all activities LOADING OPERATIONS, UNLOADING OPERATIONS or positive reactivity additions must be suspended immediately.

(continued)

BASES

ACTIONS (continued)

A.3

In addition to immediately suspending LOADING OPERATIONS, UNLOADING OPERATIONS and positive reactivity additions, action to restore the concentration to within the limit specified in the LCO must be initiated immediately.

One means of complying with this action is to initiate boration of the affected MPC. In determining the required combination of boration flow rate and concentration, there is no unique design basis event that must be satisfied; only that boration be initiated without delay. In order to raise the boron concentration as quickly as possible, the operator should begin boration with the best source available for existing plant conditions.

Once boration is initiated, it must be continued until the boron concentration is restored. The restoration time depends on the amount of boron that must be injected to reach the required concentration.

SURVEILLANCE REQUIREMENTS (continued)

SR 3.3.1.1

The boron concentration in the MPC water must be verified to be within the applicable limit within four hours prior to entering the Applicability of the LCO. For LOADING OPERATIONS, this means within four hours of loading the first fuel assembly into the cask.

For UNLOADING OPERATIONS, this means verifying the source of borated water to be used to re-flood the MPC within four hours of commencing re-flooding operations. This ensures that when the LCO is applicable (upon introducing water into the MPC), the LCO will be met.

(continued)

BASES

SURVEILLANCE REQUIREMENTS (continued)

Surveillance Requirement 3.3.1.1 is modified by a note which states that SR 3.3.1.1 is only required to be performed if the MPC is submerged in water or if water is to be added to or recirculated through the MPC. This reflects the underlying premise of this SR which is to ensure, once the correct boron concentration is established, it need only be verified thereafter if the MPC is in a state where the concentration could be changed.

There is no need to re-verify the boron concentration of the water in the MPC after it is removed from the spent fuel pool unless water is to be added to, or recirculated through the MPC, because these are the only credible activities that could potentially change the boron concentration during this time. This note also prevents the interference of unnecessary sampling activities while lid closure welding and other MPC storage preparation activities are taking place in an elevated radiation area atop the MPC. Plant procedures should ensure that any water to be added to, or recirculated through the MPC is at a boron concentration greater than or equal to the minimum boron concentration specified in the LCO

REFERENCES

1. FSAR Chapter 6 and Supplement 6.II.

B 5.0 Administrative Controls and Programs (LCO) APPLICABILITY
B 5.X Radiation Protection Program

BASES	
B5.X.1	The discussions in Section B 5.7.1 in Chapter 12 and Section B 5.3.1 in Supplement 12.II are applicable for the Version UVH.
B5.X.2	The discussions in Section B 5.7.2 in Chapter 12 and Section B 5.3.2 in Supplement 12.II are applicable for the Version UVH.
B5.X.3	The discussions in Section B 5.7.3 in Chapter 12 and Section B 5.3.3 in Supplement 12.II are applicable for the Version UVH.
B5.X.4	The discussions in Section B 5.7.4 in Chapter 12 and Section B 5.3.4 in Supplement 12.II are applicable for the Version UVH.
B5.X.5	The discussions in Section B 5.7.5 in Chapter 12 and Section B 5.3.5 in Supplement 12.II are applicable for the Version UVH.
B5.X.6	The discussions in Section B 5.7.6 in Chapter 12 and Section B 5.3.6 in Supplement 12.II are applicable for the Version UVH.
B5.X.7	The discussions in Section B 5.7.7 in Chapter 12 and Section B 5.3.7 in Supplement 12.II are applicable for the Version UVH.
B5.X.8	The discussions in Section B 5.7.8 in Chapter 12 and Section B 5.3.8 in Supplement 12.II are applicable for the Version UVH.