X-4103C005, C006
DIESEL GENERATOR ROOM
VENTILATION FANS

X-4103C013, C014
SWITCHGEAR ROOM
VENTILATION FANS

X-4103C019, C020
PUMP ROOM
VENTILATION FANS

X-4103C023
DIESEL FUEL STORAGE
ROOM VENTILATION FAN

X-4103D003 & X-4103D006
RHR COMPLEX PUMP ROOM
VENTILATION AIR FILTER

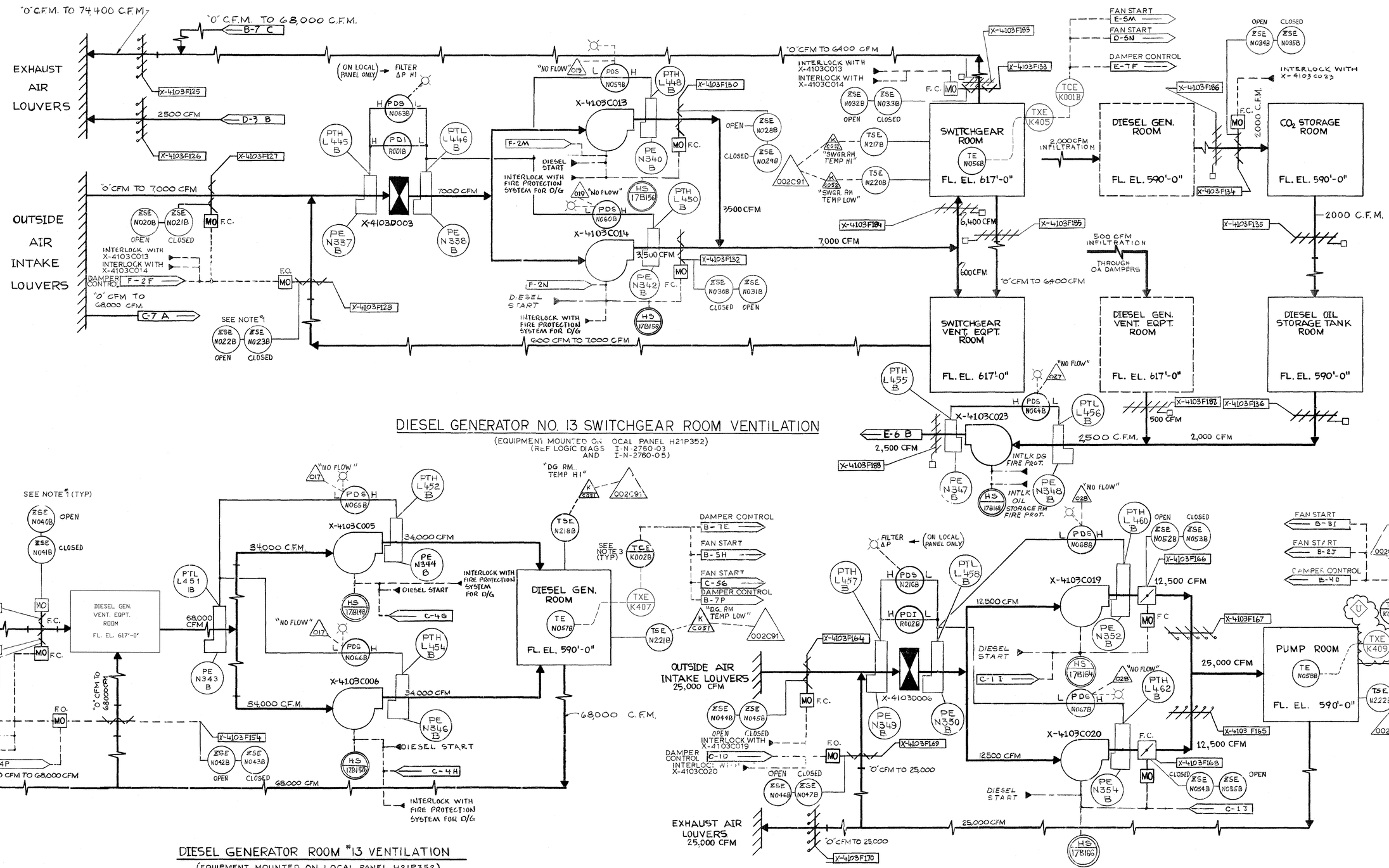

DIESEL GENERATOR NO. 13 SWITCHGEAR ROOM VENTILATION

(EQUIPMENT MOUNTED ON LOCAL PANEL H21P352)
(REF LOGIC DIAGS I-N-2760-03 AND I-N-2760-05)

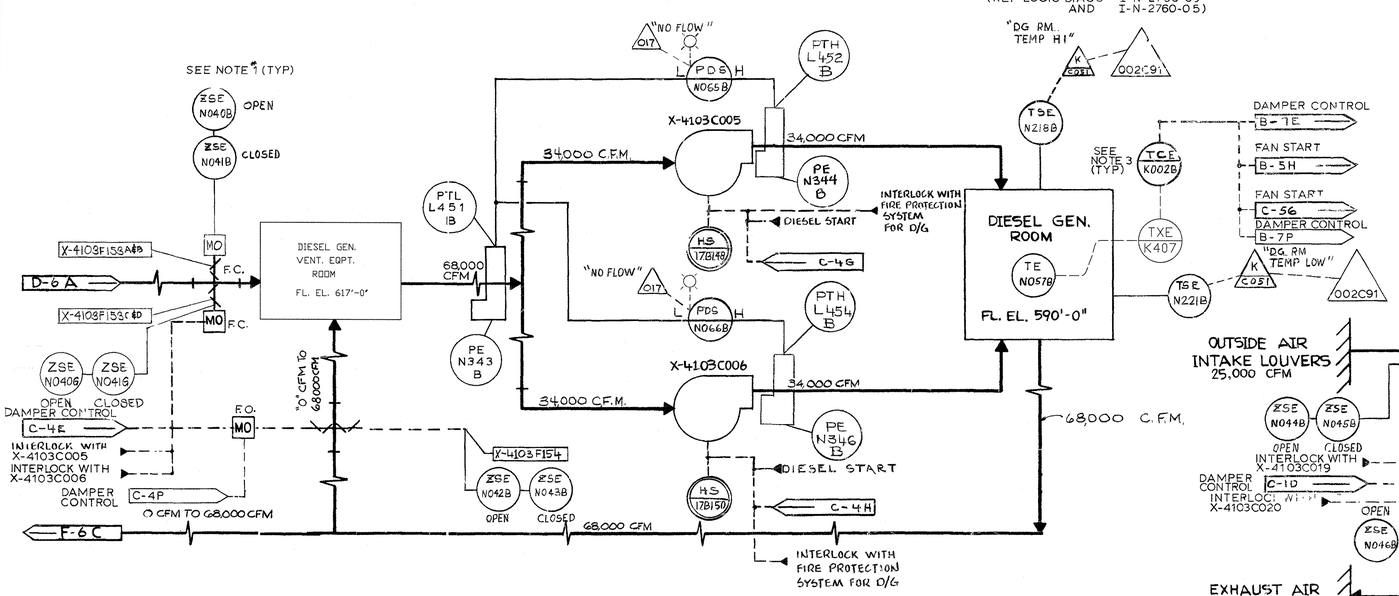

DIESEL GENERATOR ROOM #13 VENTILATION

(EQUIPMENT MOUNTED ON LOCAL PANEL H21P352)
(REF LOGIC DIA I-N-2760-02)

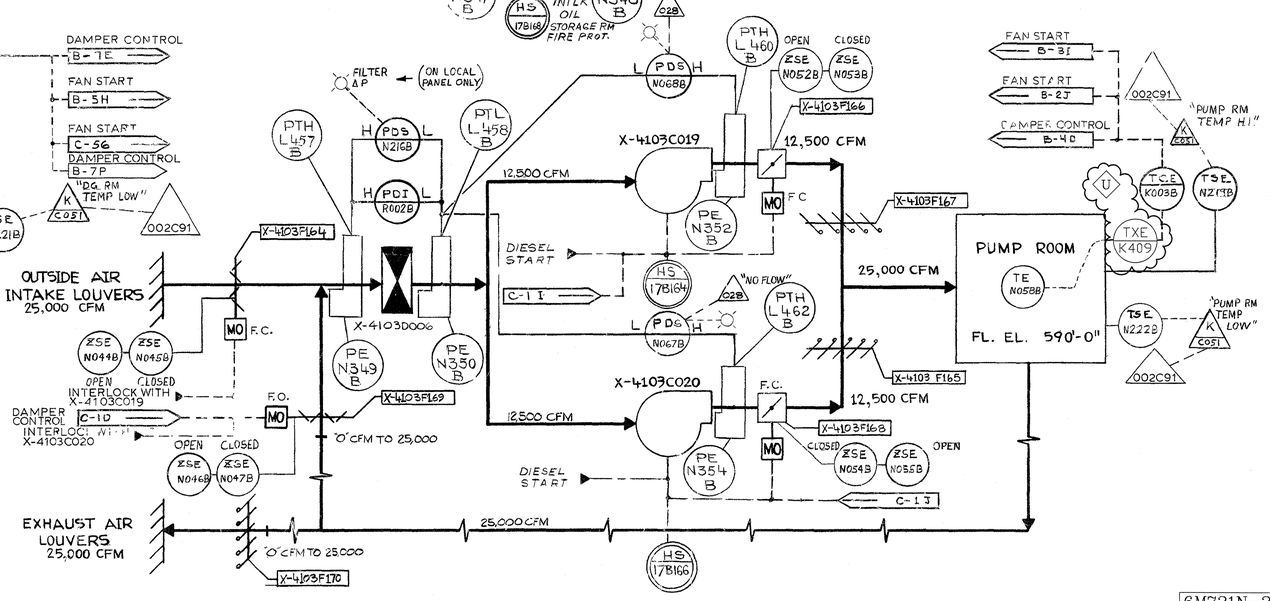

RHR COMPLEX DIV II PUMP ROOM VENTILATION

(EQUIPMENT MOUNTED ON LOCAL PANEL H21P518)
(REF LOGIC DIAG I-N-2760-04)

SEE GENERAL NOTE AT DWG. NO. M-N-2059.

6M721N-2058
LATEST REVISION U

NUCLEAR SAFETY RELATED

THIS IS A MICROSTATION PRODUCED DRAWING. CHANGES OR REVISIONS MUST BE BROUGHT TO THE ATTENTION OF THE PLANT ENGINEERING DESIGN GROUP TO ENSURE THAT CONFIGURATION CONTROL IS MAINTAINED.

THIS DRAWING WAS REFORMATTED BY MICROSTATION AT REVISION "S". ALL PREVIOUS APPROVAL SIGNATURES ARE ON FILE ON MICROFILM IN DOCUMENT CONTROL.

U DCD'S INCORPORATED:
EDP 34419.B017 REV. A

OTHER REVISIONS:
APERTURE CARD TITLE ADDED WHICH WAS INADVERTENTLY REMOVED DURING REV. R (REF. CARD 15-26207)

PREPARED BY	DATE	CHECKED BY	DATE
B. BAILEY	8/13/15	[illegible]	8/13/15
APPROVED BY			DATE
[illegible]		JOHN HUSSEY FOR TOM WEBBER PER TWB 8/20/15	9/8/2015

A PORTION OF THIS DRAWING IS AFFECTED BY THE FOLLOWING:

TC	CHANGE DOCUMENT

EDP POSTING ENTRIES REQUIRE THE ADDITION OF THE ARMS STATUS CODE: EITHER "AFC" OR "ABR"

	DATE
PREPARED BY	
CHECKED BY	
APPROVED BY	
OTHER APPROVALS	

INC. CODE: T

Detroit Edison — Fermi 2

TITLE: P&ID DIESEL GENERATOR VENTILATION RHR COMPLEX DIVISION 2

APERTURE CARD TITLE: P&ID DIES GEN VT RHR DIV 2

PLANT IDENTIFICATION SYSTEM NUMBER: X4103

ARMS RECIPIENT #

DOCUMENT TYPE CODE: DDDMEC

NUC OPS FILE NO.: 1801

DATE ISSUED: 9/2/15

DRAWING NUMBER: 6M721N-2058

REV. U