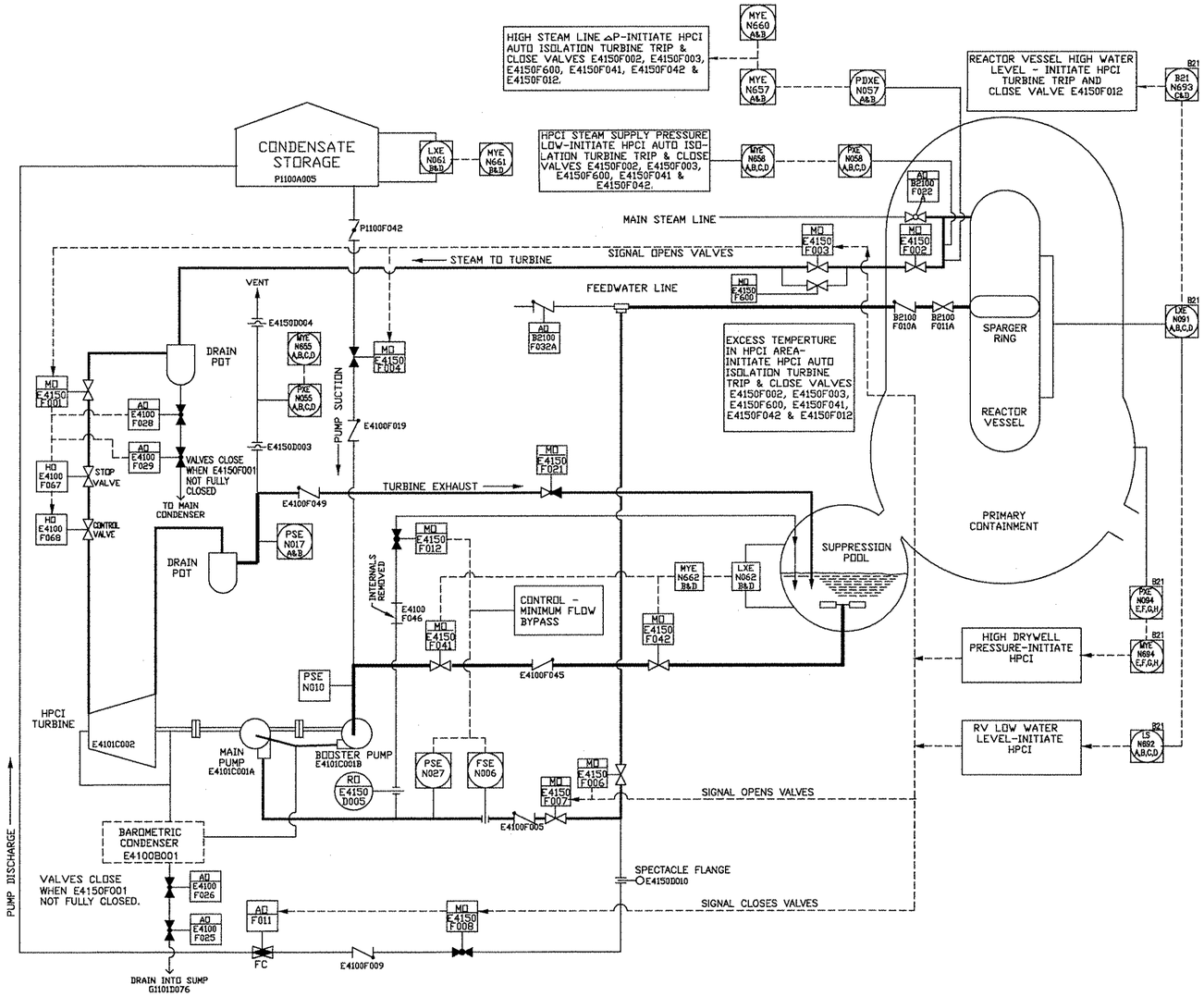

TRIP SIGNALS AND SETTINGS TO INITIATE TRANSFER OF PUMP SUCTION TO THE SUPPRESSION POOL		
TRIP	SETTING	ACTION
HIGH SUPPRESSION POOL LEVEL AND/ OR LOW CONDENSATE LEVEL	3.5" ABOVE NORMAL LEVEL MYE N662B,D 45,000 GAL, LEFT MYE N661B,D	OPEN: E4150F041 & E4150F042 CLOSE: E4150F004

E

NOTES:

1. THERE ARE NO TRIP SIGNALS TO RETURN HPCI PUMP SUCTION TO THE CONDENSATE STORAGE TANK.
2. ALL INSTRUMENTATION SHOWN ON THIS DIAGRAM SHOULD BE PREFIXED BY E41 UNLESS NOTED OTHERWISE.
3. THIS IS A SIMPLIFIED DRAWING; FOR DETAILS ON PIPING, VALVES, AND/OR INSTRUMENTATION REFER TO APPLICABLE P&ID(s) OR OTHER CONTROLLED DRAWING(s).
4. FOR TECH SPEC. SETTING VALUES, REFER TO TECH SPECS.

4M721-5873
LATEST REVISION
E

NUCLEAR SAFETY RELATED

THIS IS A MICROSTATION PRODUCED DRAWING. CHANGES OR REVISIONS MUST BE BROUGHT TO THE ATTENTION OF THE PLANT ENGINEERING DESIGN GROUP TO ENSURE THAT CONFIGURATION CONTROL IS MAINTAINED.

THIS DRAWING WAS REFORMATTED BY MICROSTATION AT REVISION "D". ALL PREVIOUS APPROVAL SIGNATURES ARE ON FILE ON MICROFILM IN DOCUMENT CONTROL.

E DCD'S INCORPORATED:

OTHER REVISIONS:
REVISED PER CARD 12-25350
(REF. EDP 35477, REV. Ø)
LCR 12-074-UFS, REV. Ø

PREPARED BY	DATE	CHECKED BY	DATE
T. MURPHY III	11-7-2012	C. BYRD	11-7-12
APPROVED BY	DATE		
	11-7-2012		

A PORTION OF THIS DRAWING IS AFFECTED BY THE FOLLOWING:

TC	CHANGE DOCUMENT

EDP POSTING ENTRIES REQUIRE THE ADDITION OF THE ARMS STATUS CODE: EITHER "AFC" OR "ASB"

PREPARED BY	DATE
CHECKED BY	DATE
APPROVED BY	DATE
OTHER APPROVALS	DATE

INC.CODE	U
	Detroit Edison Fermi 2
TITLE	HIGH PRESSURE COOLANT INJECTION SYSTEM-SIMPLIFIED DRAWING-HIGH PRESSURE INJECTION MODE USING SUPPRESSION POOL AS BACKUP SOURCE
APERTURE CARD TITLE	HP COOLANT INJ SYS SUPR POOL BKUP
PLANT IDENTIFICATION SYSTEM NUMBER	E4100
ARMS RECIPIENT #	
DOCUMENT TYPE CODE	DDDMEC
NUC OPS FILE NO.	1801
DATE ISSUED TO IS	11/8/12
DRAWING NUMBER	4M721-5873
REV.	E