TABLE OF CONTENTS

CHAPTER 10 STEAM AND POWER CONVERSION SYSTEM

10.1 SUMMARY DESCRIPTION 10.1-1

10.2 TURBINE GENERATOR 10.2-1

10.2.1 Design Bases 10.2-1
10.2.2 System Description 10.2-2
10.2.2.1 Turbine Generator 10.2-2
10.2.2.2 Generator Exciter System 10.2-2
10.2.2.3 Cycle Description 10.2-2
10.2.2.4 Tests and Inspections 10.2-3
10.2.2.5 Instrumentation Application 10.2-4
10.2.3 Turbine Disk Integrity 10.2-11
10.2.3.1 Materials Selection 10.2-11
10.2.3.2 Fracture Toughness 10.2-12
10.2.3.3 High Temperature Properties 10.2-12
10.2.3.4 Turbine Disk Design 10.2-12
10.2.3.5 Preservice Inspection 10.2-13
10.2.3.6 Inservice Inspection 10.2-14
10.2.3.7 Design Standards 10.2-15
10.2.3.8 References 10.2-16
10.2.4 Evaluation 10.2-17
10.2.5 Hydrogen and Carbon Dioxide Systems 10.2-18
10.2.5.1 Power Generation Design Bases 10.2-18
10.2.5.2 System Description 10.2-19
10.2.5.3 System Evaluation 10.2-19
10.2.5.4 Tests and Inspections 10.2-21
10.2.5.5 Instrumentation Application 10.2-21

10.3 MAIN AND REHEAT STEAM SYSTEM 10.3-1
10.3.1 Power Generation Design Bases 10.3-1
10.3.2 System Description 10.3-1
10.3.3 System Evaluation 10.3-2
10.3.4 Tests and Inspections 10.3-2

TABLE OF CONTENTS

10.3.5 Instrumentation Application 10.3-2
10.3.6 Steam and Feedwater System Materials 10.3-3

10.4 OTHER FEATURES OF STEAM AND POWER CONVERSION SYSTEM 10.4-1
10.4.1 Main Condensers 10.4-1
10.4.1.1 Power Generation Design Bases 10.4-1
10.4.1.2 System Description 10.4-3
10.4.1.3 System Evaluation 10.4-5
10.4.1.4 Tests and Inspections 10.4-6
10.4.1.5 Instrumentation Application 10.4-7
10.4.2 Condenser Air Removal System 10.4-8
10.4.2.1 Power Generation Design Bases 10.4-8
10.4.2.2 System Description 10.4-8
10.4.2.3 System Evaluation 10.4-9
10.4.2.4 Tests and Inspections 10.4-9
10.4.2.5 Instrumentation Application 10.4-10
10.4.3 Turbine Gland Sealing System 10.4-10
10.4.3.1 Power Generation Design Bases 10.4-10
10.4.3.2 System Description 10.4-10
10.4.3.3 System Evaluation 10.4-12
10.4.3.4 Tests and Inspections 10.4-12
10.4.3.5 Instrumentation Application 10.4-13
10.4.4 Turbine Bypass System 10.4-13
10.4.4.1 Power Generation Design Bases 10.4-13
10.4.4.2 System Description 10.4-14
10.4.4.3 System Evaluation 10.4-19
10.4.4.4 Tests and Inspections 10.4-20
10.4.4.5 Instrumentation Application 10.4-20
10.4.5 Circulating Water System 10.4-21
10.4.5.1 Power Generation Design Bases 10.4-21
10.4.5.2 System Description 10.4-21
10.4.5.3 System Evaluation 10.4-25

TABLE OF CONTENTS

10.4.5.4 Tests and Inspections 10.4-31
10.4.5.5 Instrumentation Application 10.4-31
10.4.6 Condensate Cleanup System 10.4-32
10.4.6.1 Power Generation Design Bases 10.4-32
10.4.6.2 System Description 10.4-34
10.4.6.3 System Evaluation 10.4-35
10.4.6.4 Tests and Inspections 10.4-35
10.4.6.5 Instrumentation Application 10.4-36
10.4.7 Condensate and Feedwater System 10.4-38
10.4.7.1 Power Generation Design Bases 10.4-38
10.4.7.2 System Description 10.4-39
10.4.7.3 System Evaluation 10.4-45
10.4.7.4 Tests and Inspections 10.4-46
10.4.7.5 Instrumentation Application 10.4-46
10.4.8 Deleted 10.4-47
10.4.9 References 10.4-47

APPENDIX 10A

(Proprietary information of Siemens Power Corporation)

LIST OF TABLES

Table 10.1-1 Summary of Important Design and Performance Characteristics of Power Conversion System

Table 10.4-1 Circulating Water System Components

LIST OF FIGURES

Figure 10.1-1 Turbine Cycle Heat Balance
Figure 10.1-2 Turbine Cycle Heat Balance
Figure 10.2-1 Deleted
Figure 10.2-1-1 Hydrogen and Carbon Dioxide System
Figure 10.2-1-2 Hydrogen and Carbon Dioxide System
Figure 10.2-2 Yard Piping Hydrogen Storage and Distribution
Figure 10.2-3 Yard Piping Hydrogen Distribution
Figure 10.3-1 Main and Reheat Steam System (2 Sheets)
Figure 10.3-2 Main and Reheat Steam System
Figure 10.3-3 Main and Reheat Steam System
Figure 10.3-4 Extraction Steam System
Figure 10.3-5 Heater Vents and Drains Systems (3 Sheets)
Figure 10.3-6 Heater Vents and Drains
Figure 10.3-7 Heater Vents and Drains
Figure 10.3-8 Moisture Separator-Reheater Vents and Drains (2 Sheets)
Figure 10.4-1 Condenser Air Removal System
Figure 10.4-2 Condenser Air Removal System
Figure 10.4-3 Main and RFP Turbine Steam Seal and Drain System
Figure 10.4-4 Main and RFP Turbine Steam Seal and Drain System
Figure 10.4-5 Circulating Water System
Figure 10.4-6 Circulating Water System
Figure 10.4-7 Circulating Water System
Figure 10.4-8 Deleted
Figure 10.4-9 Deleted
Figure 10.4-9A Condensate Cleanup System (Condensate Demineralizers)
Figure 10.4-9b Condensate Cleanup System
Figure 10.4-9c Condensate Cleanup System
Figure 10.4-9d Condensate Cleanup System
Figure 10.4-9e Condensate Cleanup System

LIST OF FIGURES

Figure 10.4-9F Condensate Cleanup System (Precoat Filters)
Figure 10.4-9g Condensate Cleanup System
Figure 10.4-10 Condensate System (2 Sheets)
Figure 10.4-11 Condensate System
Figure 10.4-12 Condensate System
Figure 10.4-13 Feedwater System
Figure 10.4-13a Figure Number Not Used
Figure 10.4-13B GGNS RFPT EHC System Hydraulic Power Unit (HPU)
Figure 10.4-14 Bypass Stop and Control Valve
Figure 10.4-15 Bypass Stop Valve Actuator
Figure 10.4-16 Bypass Control Valve Actuator

CHAPTER 10.0 STEAM AND POWER CONVERSION SYSTEM

10.1 SUMMARY DESCRIPTION

The components of the power conversion system are designed to produce electrical power from the steam coming from the reactor, condense the steam into water, and return the water to the reactor as heated feedwater, with a major portion of its gaseous, dissolved, and particulate impurities removed.

The power conversion system includes the turbine generator, main condensers, main condenser evacuation system, turbine gland sealing system, main steam system, turbine bypass system, condensate cleanup system, and the condensate and feedwater pumping and heating system. The heat rejected to the main condenser is removed by a closed circulating water system.

Steam, generated in the reactor, is supplied to the high pressure turbine. Steam leaving the high-pressure turbine passes through a combined moisture separator/reheater prior to entering the low- pressure turbines. A portion of the turbine steam is extracted for steam reheating and feedwater heating. The moisture separator drains, first stage steam reheater drains, and the drains from the fifth and sixth stage feedwater heaters go to the heater drain tank and are pumped forward into the feedwater stream. The second stage steam reheater drains go to the sixth stage feedwater heater. The drains from the fourth and third stage feedwater heaters cascade to the second stage feedwater heater. The second and first stage feedwater heaters drain independently to the main condenser.

Steam exhausted from the low-pressure turbines is condensed and deaerated in the main condenser. The condensate pumps take suction from the intermediate pressure condenser shell hotwell, delivering the condensate through the condensate demineralizers to the condensate booster pumps, which discharge through four stages of low-pressure feedwater heaters to the reactor feed pumps. The reactor feed pumps are steam-turbine driven and discharge through two stages of high-pressure feedwater heaters to the reactor.

The seal steam condenser and the steam-jet air ejectors are cooled by the turbine building cooling water system and the plant service water system, respectively.

Normally, the turbine utilizes all the steam being generated by the reactor; however, an automatic pressure-controlled turbine bypass system is provided to discharge excess steam directly to the condenser.

The steam and power conversion system is designed to utilize the rated 4412.2 MWt available from the reactor coolant system for long-term loading conditions. Of the above thermal energy, 4408 MWt represents rated core thermal power, and 4.2 MWt represents the net addition of accessory equipment. The steam and power conversion system is designed with the capability of accepting 105 percent of the normal rated thermal input for transients and short-term loading conditions.

The necessary biological shielding for the main turbines, reactor feed pump turbines, moisture separator and reheaters, and condenser has been provided for operator protection.

A summary of important design and performance characteristics of the power conversion system is given in Table 10.1-1.

The principal guaranteed reactor rating flow quantities and fluid energy levels are shown on the turbine cycle heat balance, Figure 10.1-2.

The majority of the steam and power conversion system is located in the turbine building. Since the turbine building is a nonseismic, nonsafety-related building, turbine building piping failures are not analyzed.

TABLE 10.1-1: SUMMARY OF IMPORTANT DESIGN AND PERFORMANCE CHARACTERISTICS OF POWER CONVERSION SYSTEM

a. Turbine data:

Manufacturer	A-CPSI/SPC/kwu
Type/LSB length, in.	TC6F-46
No. of turbines	1-HP, 3-LP
b. Net generator output, MW	1498.9
c. Turbine cycle heat rate, Btu/kW-hr	10,042
d. Exhaust pressures, in. Hg abs	3.62/2.91/2.37
e. Final feedwater temperature, F	419.5

f. Steam conditions at throttle valve:

Flow, 10^6 lb/hr	19.005
Pressure, psia	951.0
Temperature, F	538.5
Enthalpy, Btu/lb	1190.4
Moisture content - %	0.60

g. Turbine cycle arrangement

Steam reheat, stages	2
No. of feedwater heating stages	6
Heater drain system	HP pumped forward, LP No. 4 and No. 3 cascade to No. 2, and No. 2 and No. 1 drain independently to condenser

TABLE 10.1-1: SUMMARY OF IMPORTANT DESIGN AND PERFORMANCE CHARACTERISTICS OF POWER CONVERSION SYSTEM (Continued)

	Feedwater heaters in condenser neck	Nos. 1, 2, 3, and 4
h.	Type of condensate demineralizer	Deep bed
i.	Main steam bypass capacity, %	35

FIGURE 10.1-001

DELETED

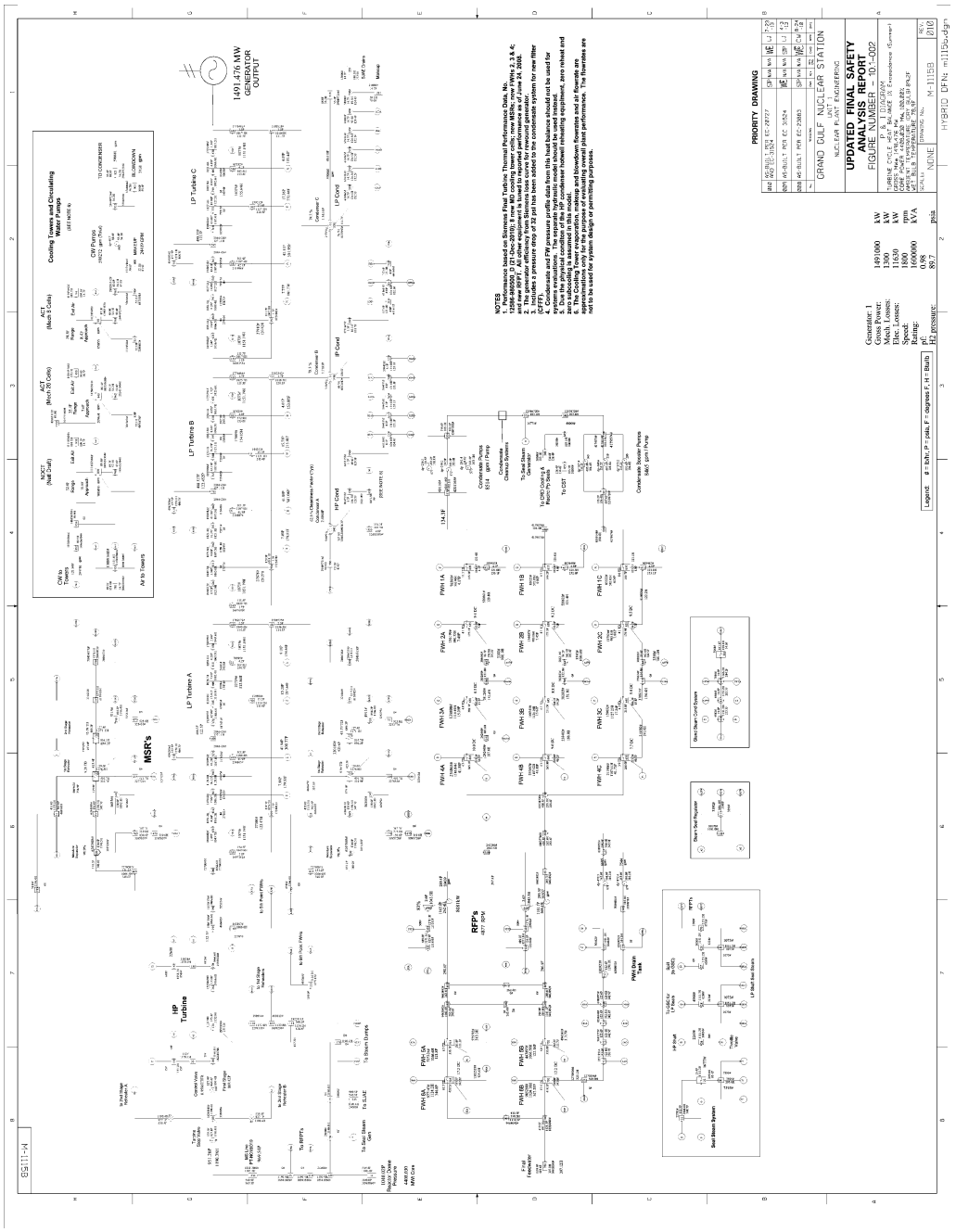
1491.476 MW GENERATOR OUTPUT
HP Turbine
LP Turbine A
LP Turbine B
LP Turbine C
MSRs
RFPs
NOTES
PRIORITY DRAWING
GRAND GULF NUCLEAR STATION
NUCLEAR PLANT ENGINEERING
UPDATED FINAL SAFETY ANALYSIS REPORT
FIGURE NUMBER - 10.1-002
HYBRID DFN: m1115u.dgn

10.2 TURBINE GENERATOR

10.2.1 Design Bases

The turbine generator is designed for the following conditions:

Turbine-generator output, kW	1,498,988
Steam conditions at turbine throttle valves:	
Flow, lb/hr	19,005,082
Pressure, psia	951.0
Temperature, F	538.5
Moisture content, %	0.60
Exhaust pressures, in. Hg abs	3.62/2.91/2.37
Final feedwater temperature, F	419.5
Stages of feedwater heating	6
Stages of steam reheating	2

This represents the guaranteed reactor rating (100 percent) heat-balance conditions shown in Figure 10.1-002.

The unit is intended for base load operation.

Within the functional limitation imposed by the nuclear steam supply system, the turbine generator is capable of accepting a load reduction from 100 percent to 35.4 percent (utilizing 30.4-percent bypass) at a rate not to exceed one percent per second with the ability to return to rated power. The plant can be controlled manually over its entire operating range at a rate of 195 MWe per minute, provided the total load change does not exceed the thermal stress limitations. The plant will accept a step-load rejection up to 35-percent full power without reactor trip. Step load reductions between 35 percent and 86 percent P_n (rated power) for other than fault events or load rejection events are not considered to be credible. Fault events in this range will not initiate a reactor trip unless power falls below 12 percent full power during the event. Step load reductions or load rejections greater than 86 percent rated power will result in a turbine trip and a reactor trip due to actuation of the Load Rejection circuitry and subsequent fast closure of the turbine control valves.

The turbine-generator and its ancillaries are manufactured in accordance with Allis-Chalmers Power Systems, Inc./SPC/kwu standard specifications.

10.2.2 System Description

10.2.2.1 Turbine Generator

The turbine generator consists of the turbine, moisture separator/reheaters, generator, exciter, controls, and required subsystems. Refer to subsection 10.2.3, Turbine Disk Integrity, for drawings of turbine, LP & HP stop and control valves, and associated equipment.

The main turbine includes one double-flow, high-pressure turbine and three double-flow, low-pressure turbines. The 1800-rpm, tandem-compound, six-flow, reheat steam turbine includes three double flow advanced design eight-disc (four discs per flow) LP turbines with 46-inch last-stage blades. Also, advanced design rotor discs for LP Nos. 1 and 2 turbines are made from 3.5% NiCrMoV steel material. Exhaust steam from the high-pressure turbine passes through two combined moisture separator and two-stage reheaters before entering the three low-pressure turbines.

The generator is a direct-driven, three-phase, 60-Hz, 22,000 volt, 1800-rpm, hydrogen cooled with water cooled stator and rotor windings, synchronous generator rated at 1600 MVA at 0.9 power factor, 75 psig hydrogen pressure, and 0.58 short-circuit ratio.

10.2.2.2 Generator Exciter System

The generator exciter system is a brushless, rotating, rectifier type with a thyristor voltage regulator. The exciter is coupled to the outboard end of the generator and includes a permanent-magnet pilot exciter which energizes the field of the main exciter through the voltage regulator. The output of the main exciter is rectified by silicon diodes mounted on rotating wheels; dc power is delivered to the generator field winding through conductors built into a central bore in the exciter end of the generator shaft. The exciter is cooled by air circulated within its housing by a shaft-mounted blower. The heat is rejected in an air-to-water heat exchanger in the housing.

10.2.2.3 Cycle Description

Steam enters the power conversion system in four main steam lines and flows to the four high-pressure stop and control valves of the main turbine generator (refer to Figure 10.3-3). As shown in Figure 10.1-2, approximately 95.2 percent of the main supply is

admitted to the high-pressure turbine. The other 4.8 percent is used in the second-stage reheating of the steam supply to the low-pressure turbines and for the air ejectors. During a station electrical load change, a portion of the main steam flow may occasionally be bypassed directly to the condenser to maintain a constant pressure in the reactor vessel steam dome. Heating steam is supplied to the offgas preheaters via the bypass header.

There is one extraction point for steam as it passes through the high-pressure turbine. A part of this high-pressure extraction steam is used for the first-stage reheating of the steam to the low-pressure turbines (refer to Figure 10.3-1), and the remainder is used for the last (sixth) stage of feedwater heating (refer to Figure 10.3-4). Most of the exhaust flow from the high-pressure turbine is led to the two combined moisture separator and two-stage reheaters. An extraction from the high-pressure turbine exhaust is used for the next-to-last (fifth) stage of feedwater heating. The drying and reheating processes, which take place between the high-pressure turbine exhaust and low-pressure turbine inlets, improve the cycle efficiency. These processes ultimately result in the production of additional electric energy from the same heat generated in the reactor. A portion of the reheated steam is directed to the turbines which drive the reactor feed pumps (refer to Figure 10.3-2). The remainder of the reheated steam is conducted equally to the three low-pressure turbines. The water removed from the steam passing through the moisture separator is drained either to the moisture separator drain tank or moisture separator shell drain tank and then to the heater drain tank (refer to Figure 10.3-8). A portion of the HP turbine exhaust flow is used for heating of the seal steam generator.

There are four extraction points in the low-pressure turbines. Extraction steam from these four points is used as the heating supply to the first four stages of feedwater heating. In addition to the external moisture separator, there is moisture removal in the low-pressure turbines at the last two extraction points (refer to Figure 10.3-4).

10.2.2.4 Tests and Inspections

[HISTORICAL INFORMATION] [An air leakage test will be performed to determine that the gas system is tight before hydrogen is introduced into a hydrogen-cooled generator. In addition, hydrogen purity will be monitored and tested in the generator. The

generator windings and all motors will be megger tested. Vibration tests will be performed on selected motor-driven equipment. Hydrostatic tests were performed on all coolers.

All piping was tested in accordance with the requirements of ANSI B31.1 "Power Piping Code," except as follows:

a. Some unisolable portions of feedwater heater vents and drains with a design pressure of 50 psig or less.

b. Some unisolable portions of moisture separator reheater vents and drains with a design pressure of 150 psig or less.

c. Any condenser tie-in line of nominal pipe size of 6 inches or less with maximum operating pressure of 50 psig or less.

The main stop valves will be tested for tightness. All motor operated valves will be bench tested or in-place tested.]

The following tests and inspections will be performed periodically to ensure operability and reliability of the unit:

a. The main stop and control valves and the low-pressure turbine stop and control valves will be closed fully and reopened by sequence testing initiated and monitored at the control panel of the automatic turbine tester (ATT) system. This system will check the actual closing time of each stop valve. If it exceeds a specified time, a light on the control panel will turn on.

b. The extraction check valves, which are equipped with air-operated closing mechanisms, will be tested by partially closing the valves, using the test levers.

c. The turbine overspeed trip, electrical and hydraulic high vacuum trip, thrust bearing failure trip, and electrical remote (manual) turbine trip will also be tested by means of the ATT system.

10.2.2.5 Instrumentation Application

The turbine generator utilizes an electrohydraulic control (EHC) system which controls the speed, load, and main steam pressure for startup and planned operations. The turbine trip system trips the

unit when required. The EHC, the turbine trip, and the bypass control system operate the main stop and control valves, LP turbine stop and control valves, bypass stop and control valves and other protective devices. Turbine-generator supervisory instrumentation is provided for operational analysis and malfunction diagnosis.

The automatic control functions are programmed to protect the reactor coolant system with appropriate corrective actions (see Chapter 7).

The turbine generator is equipped with an electrohydraulic control system that combines the principles of solid-state electronics and medium-pressure hydraulics to control steam flow through the turbine. The control system has five major subsystems:

Speed control unit

Load demand process unit

Valve positioning control units

Pressure control unit

Bypass control unit

10.2.2.5.1 Emergency Control Operations

The turbine trip system will close all valves, shutting down the turbine on the following signals:

a. Turbine is approximately 10 percent above rated speed. This trip is in effect during overspeed testing as well as normal operation. For overspeed trip details see subsection 10.2.2.5.4.

b. Vacuum decreases to less than a preselected value.

c. Excessive thrust bearing wear measured as a change in axial position of the shaft

d. A predetermined decrement of generator stator and rotor coolant flow rate; high coolant temperature; low water level in coolant tank; liquid in generator terminal box

e. External trip signals, representing various electrical system malfunctions as well as remote manual trip on the control panel

f. Loss of hydraulic fluid supply pressure. In case of a pressure loss in the control fluid supply, the turbine will remain tripped until the fluid system has been brought up to pressure again and the startup device has been set for restarting.

g. Low lubrication oil pressure

h. Operation of the manual mechanical trip at the hydraulic control equipment rack

i. High level in moisture separator drain system or high level in moisture separator shell drain system

j. High reactor water level

k. Load rejection relay (LRR) actuation

The turbine generator will not trip as a direct result of a seismic event. It may, however, be tripped indirectly by one or more of its protective devices. The turbine is designed to accept the equivalent of 0.2g horizontally in any direction at the shaft centerline without tripping.

10.2.2.5.2 Turbine-Generator Supervisory Instruments

Although the turbine is not readily accessible during operation, the turbine supervisory instrumentation is sufficient to detect potential malfunctions. The turbine supervisory instrumentation includes monitoring of the following:

a. Vibration

b. Thrust bearing wear, measured as a change in axial shaft position

c. Exhaust hood temperature and low spray water pressure

d. Oil system pressures, levels, and temperatures

e. Bearing metal and lube oil cooler inlet and outlet temperatures

f. Turbine casing and other important metal temperatures

g. Valve positions

h. Casing and rotor differential expansion

i. Shaft speed, electrical load, and control valve inlet pressure indication

j. Hydrogen temperature, dew point, pressure, and purity in the generator

k. Stator and rotor winding coolant temperature, pressure, conductivity, and flow

l. Stator and rotor winding coolant outlet temperatures, conductivity, oxygen content of the shaft pump leakage water, coolant flow rate

m. Exciter air temperatures

n. Seal steam pressure and regulating valve position

o. Seal steam condenser vacuum

p. Seal oil pressure and temperature

10.2.2.5.3 Testing Provisions

Provisions are made for testing each of the following devices while the unit is operating:

a. Main stop and control valves

b. Bypass stop and control valves

c. Low-pressure turbine stop and control valves

d. Overspeed trip

e. Turbine extraction nonreturn valves

f. Vacuum trip (electrical and hydraulic)

g. Thrust bearing wear trip

h. Remote trip solenoids

i. Lubricating oil pump

j. Control fluid pump

10.2.2.5.4 Overspeed Protection

The turbine overspeed protection system is not a safety-related system. Since the turbine overspeed control system equipment, electrical cables, and hydraulic lines are not required to safely shutdown the reactor, no protection is provided for the overspeed protection system from the effects of high or moderate energy pipe failure. Refer to Section 3.6 for further discussion of pipe break criteria. Nevertheless, the turbine is provided with a highly reliable and redundant control system to trip the turbine in the event of a turbine overspeed condition. Details of the overspeed protection system and the related turbine valving are discussed below and in Siemens Power Corporation Engineering Report No. ER-601.

Overspeed of the turbine is limited by rapid closure of the turbine control valves whenever generator output is dropped to less than a preset value, as would exist immediately after a load rejection. The control system consists of an electrohydraulic control (EHC) and mechanical hydraulic control (MHC). Both are assisted by a load rejection relay (LRR). The EHC, MHC, and LRR systems are of proven design and are made of reliable components. The EHC has redundant channels for functions critical to closure of the HP and the LP control valves in a speed-controlled mode.

The EHC controls the unit in a speed-controlled mode during startup and in a main steam pressure control mode following the load demand during power operation. The speed measuring transducers and the electrohydraulic converters are two channel systems to improve the reliability for its function critical to closure of the HP and LP control valves in a speed controlled mode. In addition, the LRR system provides trip signals to both EHC trip channels to protect the turbine from over speed during a load rejection event. Redundant speed and load measurements and power supplies are provided to the EHC. If any of these fail, automatic transfer is made to the backup and an alarm is given.

In the event of failure of the EHC, the MHC provides an independent backup control and is capable of automatically limiting transient overspeed to less than 10 percent by closing the HP and LP control valves. The MHC consists of a speed transmitter and a hydraulic speed governor. The speed transmitter

is a mechanical device attached to the turbine shaft producing a hydraulic pressure balanced against the governor. The resulting signal and the EHC signal are sent to a minimum value gate, which allows only the smaller of the two to control the control valves.

The overspeed transient subsequent to a load rejection in the MHC mode is limited by the LRR. The LRR monitors the generator output and, upon sensing a load rejection, opens the solenoid valves in the control fluid system rapidly closing the HP and LP control valves allowing the MHC to maintain speed control of the unit. In addition, the LRR sends a turbine trip signal to the EHC ensuring that the valves remain closed.

The control signal to the LP control valves is used to close the extraction valves whenever the control signal drops to a predetermined low level or whenever the turbine trips. This protects the unit against excessive overspeed due to reverse flow of steam from the extraction system through the turbine.

In the unlikely event the EHC and the MHC fail simultaneously, the turbine is still protected against excessive overspeed by a redundant overspeed trip system which rapidly closes all the stop and control valves.

Overspeed trip is activated by two spring-loaded trip bolts assembled in the HP turbine shaft within the front bearing housing. The center of gravity of the two overspeed trip bolts is eccentric to the shaft's rotational centerline. In the event of an overspeed of approximately 10 percent, the increased centrifugal forces on the rotating trip bolts overcome the restraining spring forces and the two bolts move outward. The slightest radial displacement of the trip bolts increases their eccentricity which increases the centrifugal forces accordingly, rapidly leading to a triggering of the overspeed trip devices. This produces collapse of the auxiliary trip fluid pressure resulting in fast closure of the turbine HP and LP stop and control valves, since the stop and control valves are opened by hydraulic fluid pressure and closed by spring force, and a signal to the positive-closing extraction valves. Not only the stop valves but also the control valves are tripped, since the control valves are operated by the follow-up pistons which receive fluid from the trip system, as shown in Drawing NC3.06c of ER-601. Hydraulic failures (e.g., pipe breaks) resulting in pressure loss automatically produce valve closure.

The two separate overspeed trip devices with their independent overspeed trip bolts provide full redundancy because the drainage of the auxiliary trip fluid through only one overspeed trip device is sufficient to trip the turbine. A one-out-of-two system is also used for converting the auxiliary trip fluid signal into the main trip fluid signal to the stop valves and the control system. Actuation of only one of the two main trip valves would be sufficient to trip the turbine.

In each pipe from the MSRs to the LP turbines, there is an LP stop and an LP control valve arranged to avoid excessive overspeed due to stored energy in the MSRs after a load rejection or turbine trip. One of these valves functions as a stop valve, the other as a control valve. The design of the hydraulic valve actuators of the LP valves is as described in Report ER-601. The first valve in each pipe, which acts as a stop valve, has an actuator piston which is controlled by a high-response pilot piston in its fully open or fully closed position. The second valve functions as a control valve, and its actuator is designed with a feedback system, as shown in Drawing NC4.22, of ER-601, giving the LP control valves a proportional control function. The LP stop valves receive the turbine trip signal concurrent to the HP stop valves. The LP control valves receive the control signal from the highly reliable follow-up piston system of the electro-hydraulic converters in the same manner as the HP control valves as described in ER-601.

The stop and control valves are independent of each other, each valve having its own separate hydraulic actuator. The HP stop and control valves are physically combined in a single casing, but this in no way affects their independent function. All four HP stop and control valves of the turbine are identical and are of proven design based on extensive experience.

In the event of a high- or moderate-energy piping failure, it may be possible that the turbine could lose the electrical speed control system. It can, however, be safely assumed that such a failure would not adversely affect the hydraulic speed control systems, since the loss of control fluid pressure due to a consequential fluid pipe rupture would result in closure of the turbine stop and control valves, thereby preventing the possibility of turbine overspeed. Three hydraulic functions would still control turbine speed, namely, the mechanical hydraulic control system (MHC) and the two-channel overspeed trip system.

A failure of the connection from the low pressure turbine to the condenser would result in air entering the condenser through the connection and this would result in a loss of condenser vacuum which would trip the turbine.

For further details of the overspeed trip system, see drawings of the control system in Allis-Chalmers' Engineering Report Nos. ER-504 and ER-601.

10.2.3 Turbine Disk Integrity

The use of suitable materials, adequate design, and preservice and inservice inspections can minimize the probability of failure of a turbine disk or rotor. NRC's Standard Review Plan 10.2.3, Turbine Disk Integrity, provides guidelines for choosing materials, designs, and inspections which minimize the probability of these failures. Grand Gulf's compliance with this SRP is demonstrated in the following subsections.

References referred to in the following sections are listed in subsection 10.2.3.8.

10.2.3.1 Materials Selection

"The turbine disk or rotor should be made from a material and by a process that tends to minimize flaw occurrence and maximize fracture toughness properties, such as a NiCrMoV alloy processed by vacuum melting or vacuum degassing."

For compliance with the above statement from SRP 10.2.3, see Ref. 1 and Part 3 of Ref. 4.

a. "Chemical analysis should be made for each forging."

For compliance with the above statement from SRP 10.2.3, see Ref. 1 and Part 3 of Ref. 4.

b. "The fracture appearance transition temperature (50% FATT) as obtained from Charpy tests performed in accordance with specification ASTM A-370 should be no higher than 0°F for low pressure disks and 50°F for high pressure rotors. Nil-ductility transition (NDT) temperature obtained in accordance with specification ASTM E-208 may be used in lieu of FATT. NDT temperatures should be no higher than -30° and 20°F, respectively."

For compliance with above statement from SRP 10.2.3, see Ref. 1 and Part 3 of Ref. 4.

c. "The Charpy V-notch (Cv) energy at the minimum operating temperature of each low pressure disk in the tangential x direction should be at least 60 ft-lbs. The Cv energy of high pressure rotor materials at minimum operating temperature should be at least 50 ft-lbs. A minimum of three Cv specimens should be tested in accordance with specification ASTM A-370."

For compliance with above statement from SRP 10.2.3, see Ref. 1 and Part 3 of Ref. 4.

10.2.3.2 Fracture Toughness

"The ratio of the fracture toughness (KIc) of the disk and rotor materials to the maximum tangential stress at speeds from normal to design overspeed should be at least two in. at minimum operating temperature. Bore stress calculations should include components due to centrifugal loads, interference fit, and thermal gradients. Sufficient warmup time should be specified in the turbine operating instructions to assure that toughness will be adequate to prevent brittle fracture during startup."

For compliance with above statement from SRP 10.2.3, see Ref. 1 and Part 3 of Ref. 4.

10.2.3.2.1 Fracture Toughness Properties

These are obtained as described in Ref. 1, Question 120.2 (Pg. 14) of Ref. 2, and Part 3 of Ref. 4.

10.2.3.3 High Temperature Properties

High pressure rotor integrity is described in Ref. 1, Part 1.2 of Ref. 3, and Question 120.1 (Pg. 7) of Ref. 2.

10.2.3.4 Turbine Disk Design

a. For a discussion of the design overspeed of the turbine, see Ref. 1, Part 2 of Ref. 3, and Part 3 of Ref. 4.

b. "The combined stresses of low pressure disks or high pressure rotor at design overspeed due to centrifugal forces, interference fit, and thermal gradients should not

exceed 0.75 of the minimum specified yield strength of the material, or 0.75 of the measured yield strength in the weak direction of the materials if appropriate tensile tests have been performed on the actual disk material."

For compliance with above statement from SRP 10.2.3, see Ref. 1 and Part 3 of Ref. 4.

c. "The turbine shaft bearings should be able to withstand any combination of the normal operating loads, anticipated transients, and accidents resulting in turbine trip."

Compliance with above statement from SRP 10.2.3 is demonstrated in References 1, 2, 3 and 4.

d. "The natural critical frequencies of the turbine shaft assemblies existing between zero speed and 20% overspeed should be controlled in the design and operation so as to cause no distress to the unit during operation."

For compliance with above statement from SRP 10.2.3, see Ref. 1 and Part 3 of Ref. 4.

e. "The turbine rotor and disk design should facilitate inservice inspection of all high stress regions, including bores and keyways, with the need for removing the disks from the shaft."

For compliance with above statement from SRP 10.2.3, see Ref. 1 and Part 3 of Ref. 4.

10.2.3.5 Preservice Inspection

a. "Disk forgings should be rough machined prior to heat treatment."

For compliance with above statement from SRP 10.2.3, see Ref. 1 and Part 3 of Ref. 4.

b. "Each finished disk should be subjected to 100% volumetric (ultrasonic), surface, and visual examinations using procedures and acceptance criteria equivalent to those specified for Class 1 components in the ASME Boiler and Pressure Vessel Code, Sections III and V."

For compliance with above statement from SRP 10.2.3, see Ref. 1 and Part 3 of Ref. 4.

c. "Finish machined bores, keyways, and drilled holes should be subjected to magnetic particle or liquid penetrant examination."

For compliance with above statement from SRP 10.2.3, see Ref. 1 and Part 3 of Ref. 4.

d. "Each turbine rotor assembly should be spin tested at the maximum speed anticipated during a turbine trip following loss of full load."

For compliance with above statement from SRP 10.2.3, see Ref. l and Part 3.5 of Ref. 4.

10.2.3.6 Inservice Inspection

Major components, such as HP and LP turbines, are to be inspected at periodic intervals.

The LP turbine discs are to be inspected at periodic intervals. The methodology used to determine the inspection intervals for the LP turbines and the acceptable levels of disc failure are given in References 6, 7 and 11 of Section 10.2.3.8. LP disc inspections are set to not exceed the limits given in Reference 11. Actual LP turbine rotor disc test data and actual operating hours are used to establish the appropriate operating hours between disc inspections.

A representative main stop and control valve, a representative low pressure stop and control valve, and a representative bypass stop and control valve are to be inspected at least once per 48 months. Depending upon what is found in the valves actually inspected will determine whether or not other valves will require inspection and repair during this same outage.

Generator bearings shaft seals are to be inspected on a periodic basis and the rotor should be removed for a thorough inspection of the generator internals at periodic intervals.

The main steam stop and control valves, the LP stop and control valves, and the turbine protective devices are to be exercised using the ATT (Ref. 13) at periodic intervals. The testing intervals for the main steam stop and control valves, the LP stop

and control valves, and the turbine protective devices are in accordance with turbine generator vendor recommendations, as described on page 18 of Section 9 in Reference 5 of Section 10.2.3.8 and as discussed in References 9, 10 and 13 of Section 10.2.3.8.

The frequency of testing for all turbine extraction nonreturn valves will be the same intervals as those for the turbine stop and control valves.

For additional information, see page 6, section 8, part 6.C of Ref. 1.

10.2.3.7 Design Standards

The turbine generator is designed in accordance with ACPSI/KWU design standards which have evolved from years of design and operating experience. These design standards, in general, meet or exceed the intent of codes such as DIN, VDE, ANSI, and IEEE where applicable.

10.2.3.8 References

1. Engineering Statement ES-43 — Comments on the "Branch Technical Position MTEB 10.-1 (Rev. 2) Turbine Disk Integrity" for 1800 rpm Nuclear Steam Turbine-Generators with 46 inch Last Stage Blades.
2. Engineering Statement ES-63 — Comments on Questions from the Mechanical and Materials Engineering Branches of the NRC Pertaining to the A-CPSI Missile Reports ER-503 and ER-504.
3. Engineering Report No. ER-503 — Turbine Missile Analysis for 1800 rpm Nuclear Steam Turbine-Generators with 46 inch Last Stage Blades.
4. Engineering Report No. ER-504 — Probability of Turbine Missiles from 1800 rpm Nuclear Steam Turbine-Generators with 46 inch Last Stage Blades.
5. Engineering Report No. ER-601 — Speed Control of 1800 rpm Steam Turbine-Generators for Light Water Reactor Application
6. Engineering Report No. ER-8503 — Probability of disk cracking due to stress corrosion.
7. Letter from C. R. Hutchinson to NRC Document Control Desk, GNRO-94/00114, dated October 12, 1994, "Closure and Deletion of License Condition 2.C.(26), Turbine Disc Integrity (PCOL 94/01)"
8. Design Report No. FS4/1018/1995 — Engineering Analysis in the Hypothetical Case of a Wheel Disk Bursting in the LP Sections 1 to 3 of the New Design Series

1. Engineering Statement ES-43 — Comments on the "Branch Technical Position MTEB 10.-1 (Rev. 2) Turbine Disk Integrity" for 1800 rpm Nuclear Steam Turbine-Generators with 46 inch Last Stage Blades.

9. Letter from Siemens Power Corporation to W. R. Patterson, Turbine Project Manager, GEXI-95/00625, dated June 21, 1994, "Theoretical Basis and Calculations for Extending the Interval Between Testing of the Turbine Valves".

10. Letter from Siemens Power Corporation to W. R. Patterson, Turbine Project Manager, GEXI-97/00102, dated March 6, 1997, "ATT Valve Testing".

11. Missile Analysis with LP Upgrade, 98044j, November 19, 1998.

12. GNRI-95/00083, "Issuance of Amendment No. 121 to Operating License No. NPF-29 - Grand Gulf Nuclear Station, Unit 1 (TAC No. M90673)", P. W. O'Connor, NRC, to C. R. Hutchinson, Entergy, April 17, 1995.

13. Letter from Siemens Power Corporation to W. R. Patterson, GEXI-98/00233, dated August 17, 1998, "MAIN Turbine-Generator ATT Valve Test Interval".

Notes: Items 1-5 above were originated by Allis-Chalmers and revised by Siemens Power Corporation as part of turbine upgrade.

Item 6 above was performed by Utility Power Corporation and submitted to the NRC by MP&L via AECM-85/0333, dated November 1, 1985. This item was revised by Siemens Power Corporation as part of turbine upgrade.

10.2.4 Evaluation

The primary source of radioactivity in the steam and power conversion system is radiation from nitrogen-16, formed by activation in the reactor. This activity is carried with the steam to the turbine. Other gaseous sources of radioactivity are fission product noble gases and other activation gases, such as oxygen-19, nitrogen-17, and nitrogen-13, which are also carried with the steam to the turbine. Nongaseous fission and activation products are present in the turbine due to moisture carryover in

the steam from the NSSS. The maximum anticipated operating concentration of radioactivity in the high-pressure turbine will be the same as that indicated in the tables in Chapter 11 multiplied by the following appropriate carryover factors:

Noble gas	1 (100% carryover)
Halogens	0.02
Other fission products	0.001

The activity entering the low-pressure turbine is further reduced due to the presence of moisture separation, etc., between the high- and low-pressure turbines.

Most of the gaseous activity in the condenser will be removed by the air ejectors to the offgas system (see Section 11.3). The amount that is not removed will be reduced significantly by the approximate three minutes of holdup time in the condenser hotwells. Therefore, the activity entering the condensate and the feedwater line will be significantly reduced.

Shielding requirements are discussed in Section 12.3. The turbine will be in a controlled access area with a locked door.

10.2.5 Main Generator Hydrogen and Carbon Dioxide Systems

10.2.5.1 Power Generation Design Bases

a. The hydrogen and carbon dioxide system is designed to provide the necessary flow and pressure at the main turbine generator:

   1. During startup when air is purged from the generator by carbon dioxide

   2. During startup when carbon dioxide is purged from the generator by hydrogen

   3. During shutdown when hydrogen is purged from the generator by carbon dioxide

   4. During shutdown when carbon dioxide is purged from the generator by air

5. During normal operation where hydrogen is continuously supplied to the generator to make up for generator hydrogen leakage

b. A dry hydrogen environment is maintained within the generator during normal operation by means of a hydrogen gas dryer unit.

c. Should the carbon dioxide portion of the subject system fail, the plant could continue in normal operation. Should the hydrogen portion of the subject system fail, the plant could continue in normal operation until the generator hydrogen pressure began to fall below 75 psi after which the generator should be operated in accordance with the turbine generator manufacturer's requirements.

10.2.5.2 System Description

The hydrogen and carbon dioxide system consists of hydrogen supply piping with all necessary valves, instrumentation, gas purity measuring equipment, hydrogen gas dryers, and carbon dioxide supply piping with all necessary valves and instrumentation. The hydrogen and carbon dioxide system components, piping, valves, and instrumentation are shown in Figures 10.2-1 through 10.2-3.

The carbon dioxide bulk storage units are located outdoors. The hydrogen and carbon dioxide gas filling unit (generator gas rack) is located inside the turbine building at El 129'-0" in an area classified as radiation zone B.

Hydrogen makeup to the generator is supplied from the Hydrogen Water Chemistry (HWC) system (P73) via a ¾" supply line from hydrogen isolation/regulation panel 1H22-P732. The hydrogen bulk storage area for the HWC system is described in Section 9.5.10.2.1.

10.2.5.3 System Evaluation

The hydrogen and carbon dioxide system serves no safety function. Systems analysis has shown that failure of the hydrogen and carbon dioxide system will not compromise any safety-related systems or prevent safe shutdown.

The safety evaluation for the hydrogen bulk storage area for the HWC system is included in Section 9.5.10.3.1.

The hydrogen distribution headers inside the turbine building are routed as follows:

1. Headers are located to prevent physical damage to pipe.

2. Headers are located away from equipment that present a fire hazard to hydrogen.

3. Headers are routed through ventilated areas.

The protective measures taken to prevent fires and explosions include the strict observance of the turbine vendor's operating instructions. These protective measures include the following during operation and maintenance:

a. During normal operation, hydrogen is used to cool the generator. To prevent hydrogen from leaking through the generator shaft seal glands into the turbine building, a shaft oil sealing system is provided.

   To avoid having an explosive hydrogen-air mixture in the generator at any time, such as when the generator is being filled with hydrogen prior to being placed in service or when hydrogen is being removed from the generator for maintenance or inspection, a carbon dioxide purge is used. Hydrogen concentrations are controlled with the aid of a gas analyzer.

   Before filling or purging the generator, the carbon dioxide analyzer will be calibrated with air, carbon dioxide, and hydrogen.

b. Hydrogen removal from the generator before it is opened for maintenance

   While the generator is at standstill or on turning-gear operation and the shaft-sealing system is in operation, carbon dioxide is admitted into the generator, maintaining a pressure between specified limits in the generator casing, until the carbon dioxide concentration in the discharge is in excess of 95 percent measured by a gas tester on the control board of the hydrogen and carbon dioxide gas system. The carbon dioxide will be purged from the casing with dry air.

c. Air removal from the generator before hydrogen fill following maintenance

While the generator is at a standstill or on turning-gear operation and the shaft-sealing system is in operation, carbon dioxide will be admitted to the bottom of the generator through carbon dioxide distribution piping, and air in the generator will be discharged to atmosphere through the hydrogen feed pipe.

While the generator is being filled with carbon dioxide, the percentage of carbon dioxide in the gas mixture being discharged from the generator to the atmosphere should be measured by the carbon dioxide-air scale of the carbon dioxide analyzer. Carbon dioxide will be admitted to the generator until air has been displaced by carbon dioxide.

d. Filling generator with hydrogen

When the air has been displaced by carbon dioxide as determined by the gas analyzer, hydrogen is admitted to the top of the generator through the sparger and carbon dioxide is vented to atmosphere through the lower sparger, where it was originally admitted. When hydrogen concentration in the vented gas is above 98 percent hydrogen in air, the vent to atmosphere may be closed and the hydrogen pressure raised to the required operating pressure.

10.2.5.4 Tests and Inspections

The hydrogen and carbon dioxide system is proved operable by its use. [HISTORICAL INFORMATION] [System piping and components were pneumatically tested prior to initial startup.]

10.2.5.5 Instrumentation Application

The primary operating station for the hydrogen and carbon dioxide system is at the generator gas rack. Hydrogen pressure and gas purity are monitored both at the generator gas rack and in the control room. In addition, a mechanical hydrogen purity meter system which monitors generator fan differential pressure provides a redundant hydrogen purity indication at the generator gas rack. Hydrogen dew point is monitored to provide generator moisture detection.

Figure 10.2-001:
Superceded by FSAR Figures 10.2-001-1 and 10.2-001-2

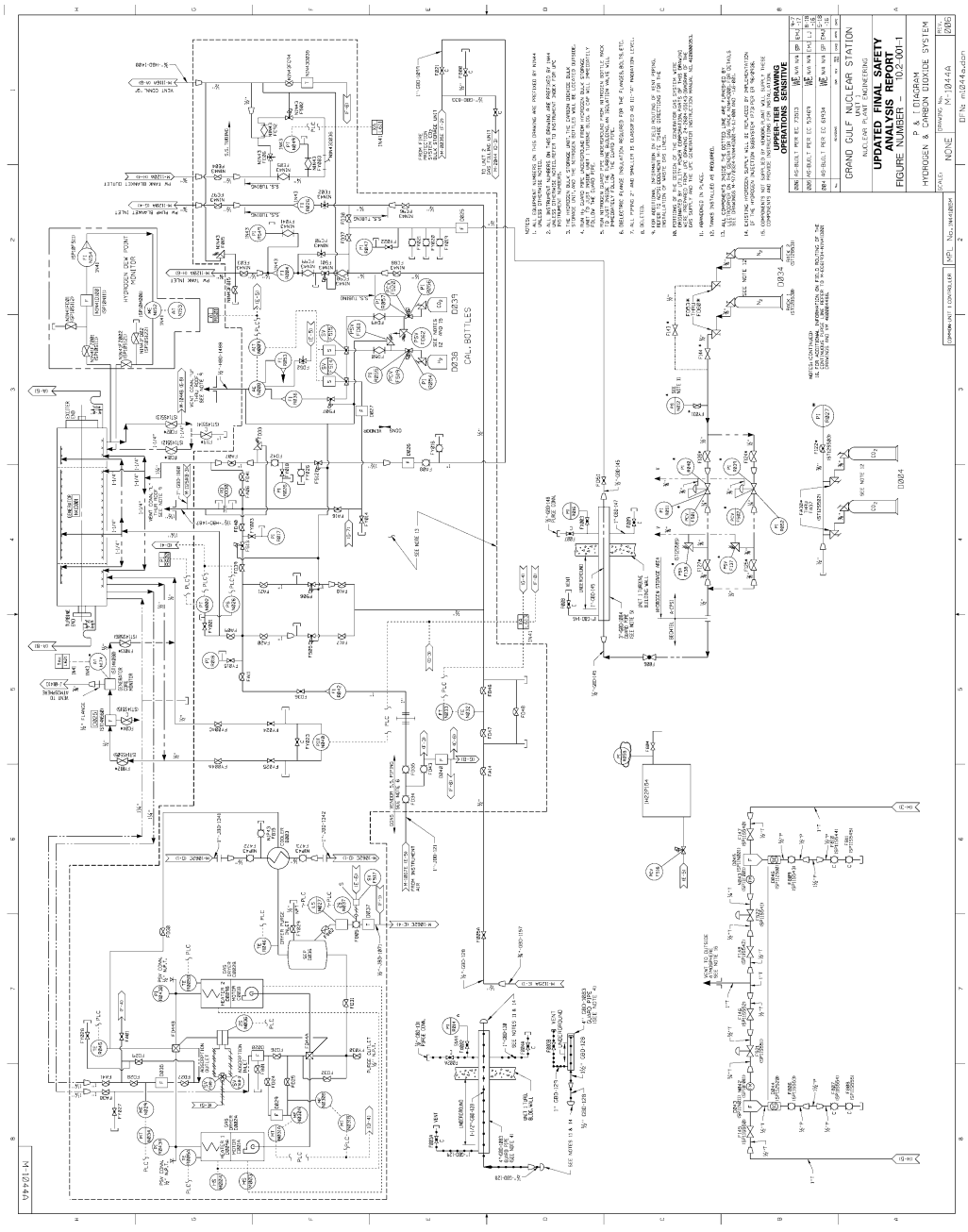
GRAND GULF NUCLEAR STATION
UNIT 1
NUCLEAR PLANT ENGINEERING
UPDATED FINAL SAFETY ANALYSIS REPORT
FIGURE NUMBER - 10.2-001-1
P & I DIAGRAM
HYDROGEN & CARBON DIOXIDE SYSTEM
UPPER-TIER DRAWING
OPERATIONS SENSITIVE
CAL. BOTTLES
HYDROGEN DEW POINT MONITOR
M-1044A

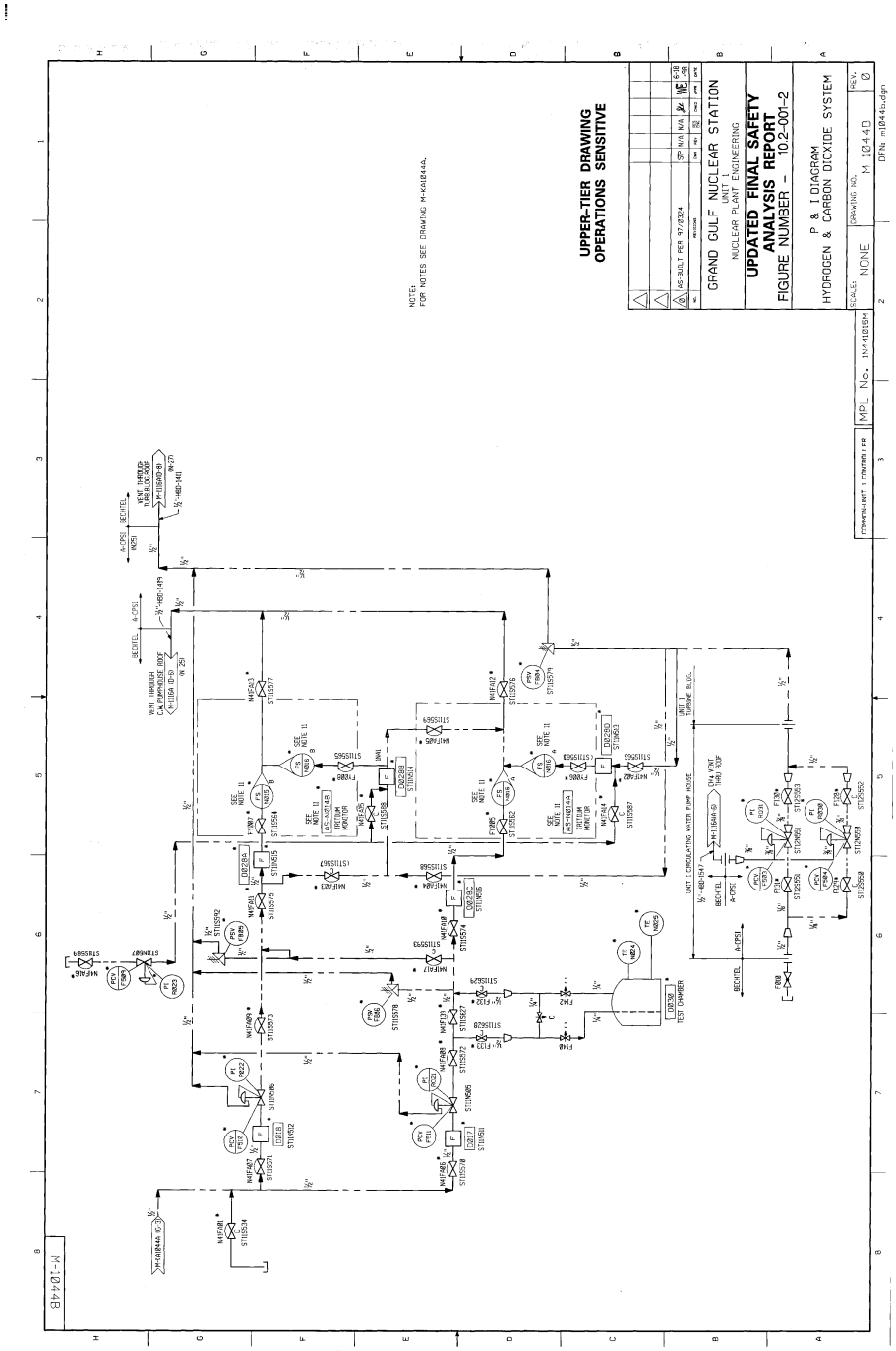
UPPER-TIER DRAWING
OPERATIONS SENSITIVE
GRAND GULF NUCLEAR STATION
UNIT 1
NUCLEAR PLANT ENGINEERING
UPDATED FINAL SAFETY
ANALYSIS REPORT
FIGURE NUMBER - 10.2-001-2
P & I DIAGRAM
HYDROGEN & CARBON DIOXIDE SYSTEM
SCALE: NONE
DRAWING NO. M-1044B
REV. 0
M-1044B

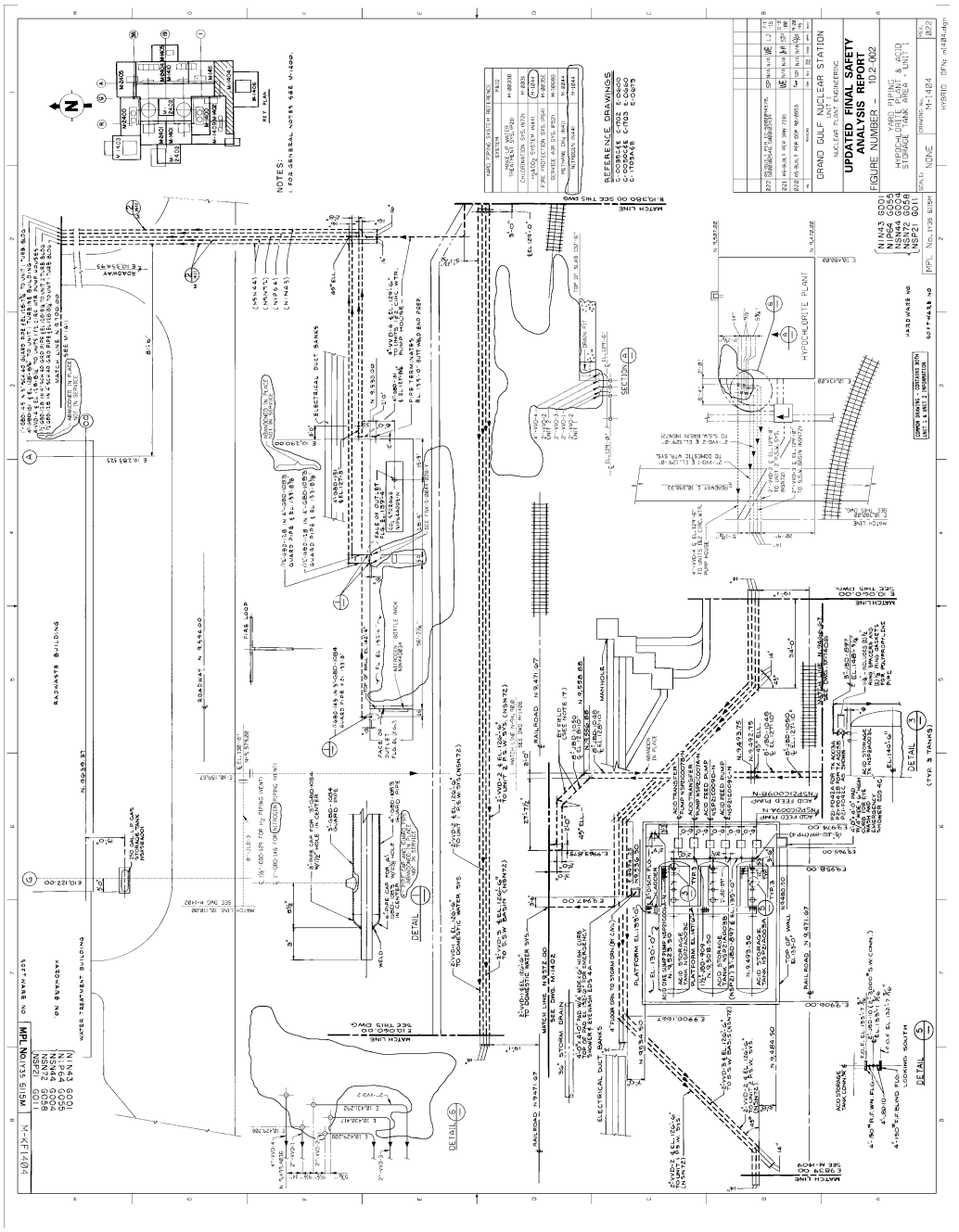
GRAND GULF NUCLEAR STATION
NUCLEAR PLANT ENGINEERING
UPDATED FINAL SAFETY ANALYSIS REPORT
FIGURE NUMBER – 10.2-002
YARD PIPING HYPOCHLORITE PLANT & ACID STORAGE TANK AREA – UNIT 1
REFERENCE DRAWINGS
NOTES:
1. FOR GENERAL NOTES SEE M-1400
KEY PLAN
HYPOCHLORITE PLANT
RADWASTE BUILDING
WATER TREATMENT BUILDING
ROADWAY
RAILROAD
SECTION
DETAIL

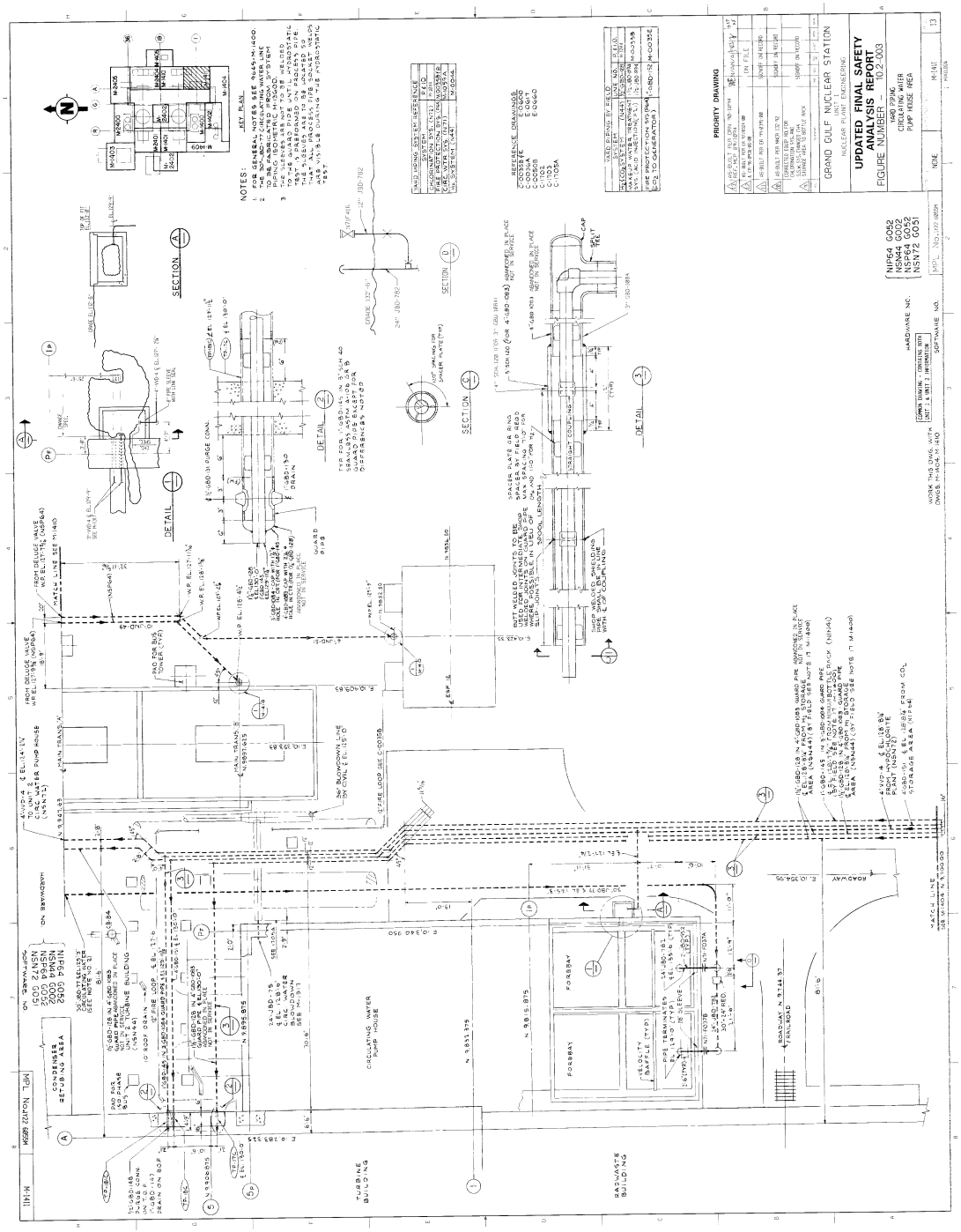
UPDATED FINAL SAFETY ANALYSIS REPORT
FIGURE NUMBER 10.2-003
GRAND GULF NUCLEAR STATION
CIRCULATING WATER PUMP HOUSE AREA
NUCLEAR PLANT ENGINEERING
PRIORITY DRAWING
NOTES:
KEY PLAN
SECTION A
SECTION B
SECTION C
DETAIL 1
DETAIL 2
DETAIL 3
CIRCULATING WATER PUMP HOUSE
TURBINE BUILDING
RADWASTE BUILDING
FOREBAY
ROADWAY
MATCH LINE

10.3 MAIN AND REHEAT STEAM SYSTEM

10.3.1 Power Generation Design Bases

The main and reheat steam system performs the following:

a. Delivers main steam from the reactor to the turbine generator from warmup to valves-wide-open flow

b. Delivers main steam to the second stage reheaters, steam jet air ejector, and offgas preheaters

c. Delivers main steam to the reactor feed pump turbines during startup and low-load operation and to the seal steam generator (during low loads)

d. Delivers reheat steam to the reactor feed pump turbines during normal operation

e. Bypasses main steam past the turbine directly to the main condenser during startup and in the event the steam required by the turbine is less than that produced by the NSSS.

10.3.2 System Description

The main and reheat steam system is shown in Figures 10.3-1 to 10.3-3. The main steam piping consists of four 28-inch outside diameter lines downstream of the main steam line shutoff valves up to the main turbine stop valves. The extraction steam lines used for the feedwater heaters are shown in Figure 10.3-4. The feedwater heater vents and drains are shown in Figures 10.3-5 through 10.3-7. The moisture separator/reheater vents and drains are shown in Figure 10.3-8. The remaining portion of the main steam lines between the reactor pressure vessel and the shutoff valves is described in Section 5.4. Section 5.2 discusses inservice inspection, materials, and environmental conditions for the safety-related portions of the system piping. A discussion of the measures provided to limit blowdown of the system in the event of a steam line break is presented in subsection 5.4.4. The use of four main steam lines permits tests of the turbine stop valves and main steam line isolation valves during plant operation, with only a minimum of load reduction.

All equipment, piping, and valves described in this section are located in the turbine building. Major components such as combined main stop and control valves, combined bypass stop and control valves, moisture separator/reheaters, reactor feed pump turbines, and main turbines are located in high radiation areas.

All main steam line piping between the main steam line shutoff valve and the turbine main stop valve, turbine bypass piping from the main steam line to the turbine bypass stop valve, and the main steam branch lines have been designed, fabricated, and tested in accordance with the requirements of Table 3.2-1. The turbine bypass system is discussed in subsection 10.4.4.

The design pressure-temperature rating of the main steam piping is 1250 psig, 575 F, the same as the design pressure-temperature of the reactor. The main steam line has been analyzed for the dynamic loadings due to fast closure of the turbine stop valves.

The branch lines from the four main steam lines to the turbine bypass system are headered. This header placement ensures that the turbine bypass system is connected to the operating steam lines.

10.3.3 System Evaluation

The portion of the main and reheat steam system described in this section has no safety-related function as discussed in Section 3.2, and therefore is not classified as seismic Category I.

10.3.4 Tests and Inspections

Inspection and testing were carried out in accordance with the requirements of the codes and standards listed in Table 3.2-1. The main steam lines were hydrostatically tested to confirm leak tightness. Visual inspection of the pipe weld joints in the main steam lines confirmed the exterior condition of the weld.

10.3.5 Instrumentation Application

Steam-flow measurement and its application to reactor coolant control are discussed in subsection 7.7.1.4. Steam pressure measurement and its application to turbine generator control are discussed in subsection 7.7.1.5. Leakage detection in the event of a main steam line break is discussed in subsection 7.6.1.4.

10.3.6 Steam and Feedwater System Materials

Section 5.4 discusses the Class 2 and 3 portion of the main steam and feedwater piping and contains a discussion of materials as required in Regulatory Guide 1.70, Revision 2.

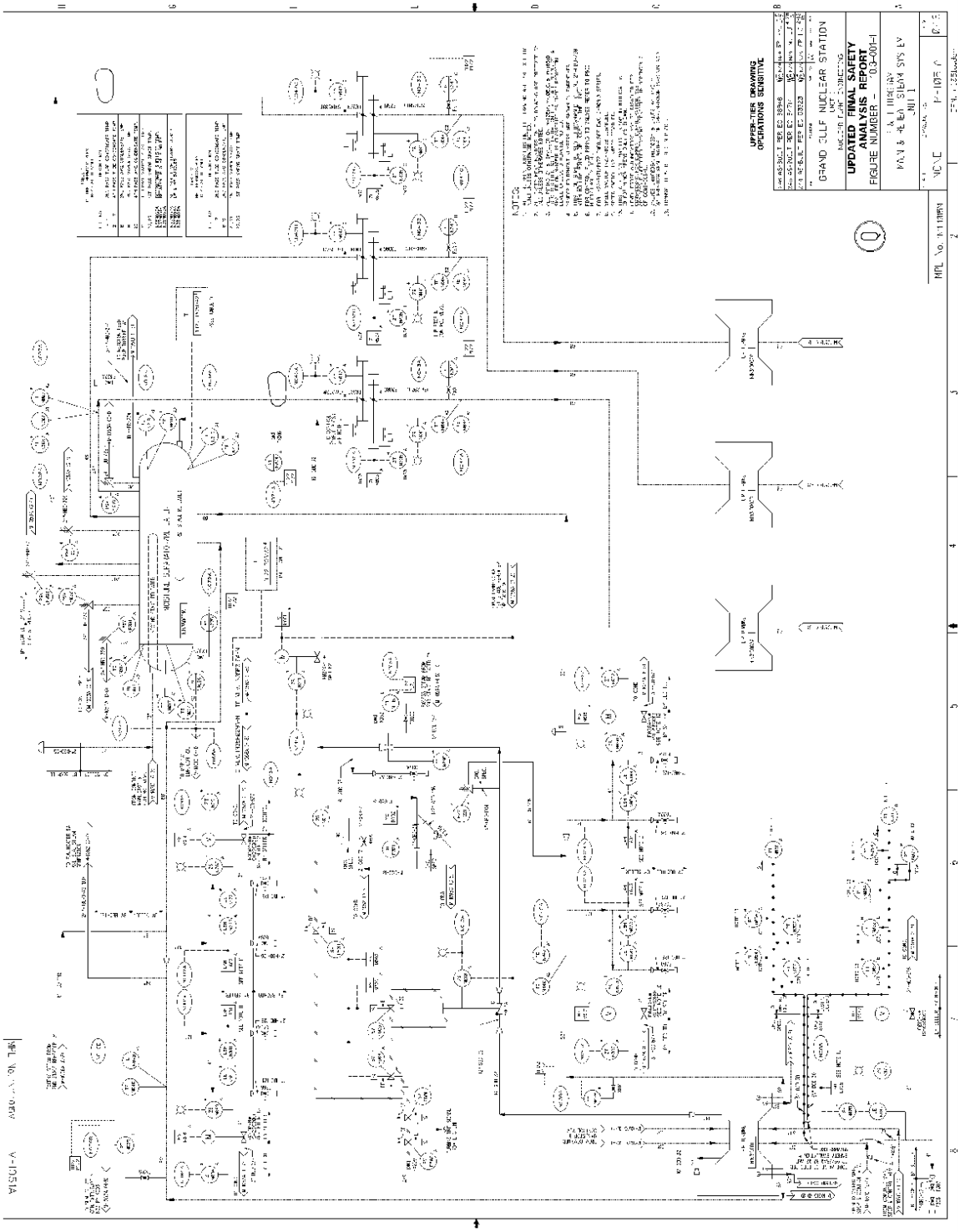
UPPER-TIER DRAWING
OPERATIONS SENSITIVE
UPDATED FINAL SAFETY
ANALYSIS REPORT
FIGURE NUMBER 10.3-001-I
GRAND GULF NUCLEAR STATION
UNIT 1

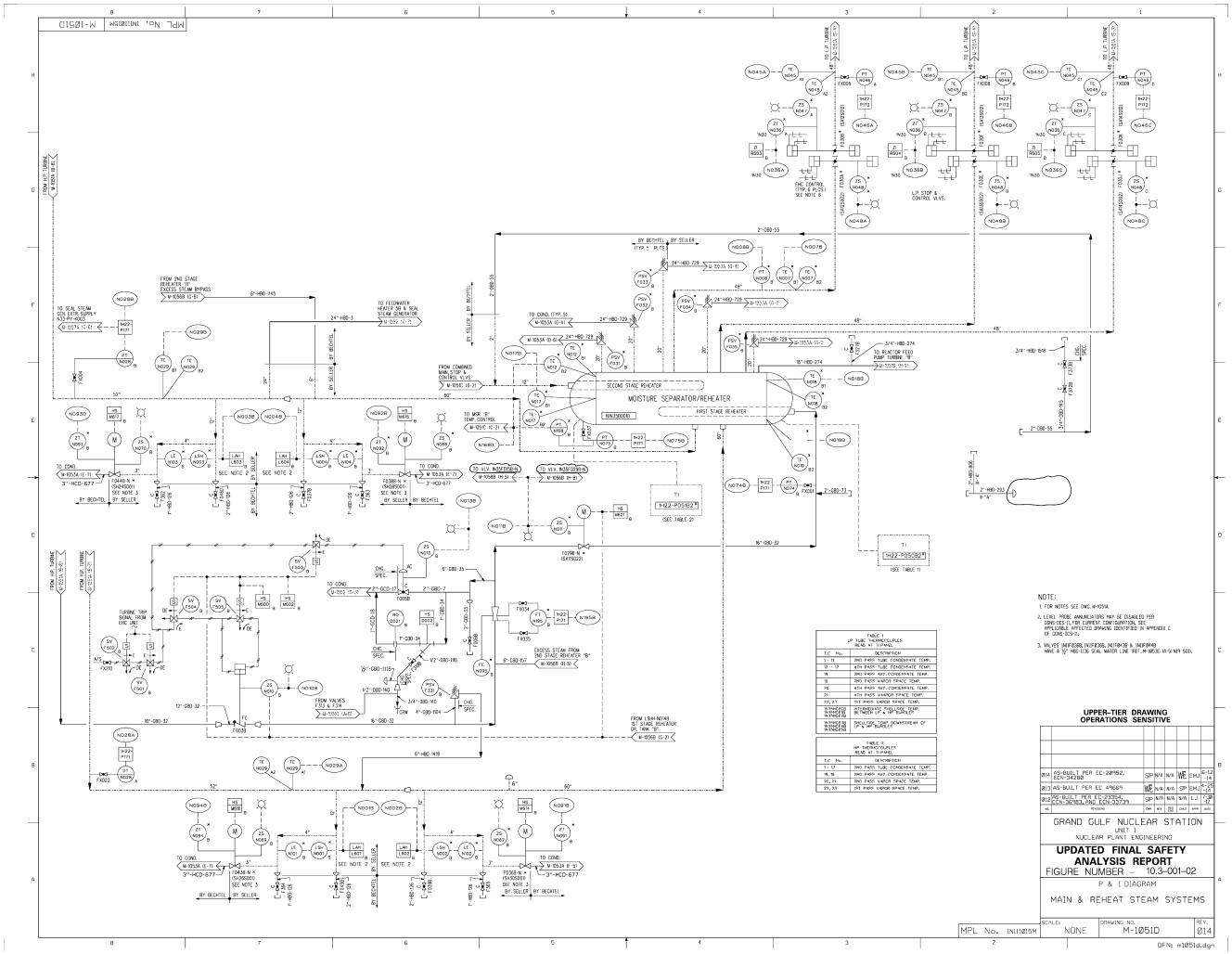
MOISTURE SEPARATOR/REHEATER
SECOND STAGE REHEATER
FIRST STAGE REHEATER
NOTE:
UPPER-TIER DRAWING
OPERATIONS SENSITIVE
GRAND GULF NUCLEAR STATION
UNIT 1
NUCLEAR PLANT ENGINEERING
UPDATED FINAL SAFETY
ANALYSIS REPORT
FIGURE NUMBER – 10.3-001-02
P & I DIAGRAM
MAIN & REHEAT STEAM SYSTEMS
SCALE: NONE
DRAWING NO. M-1051D
REV. 014

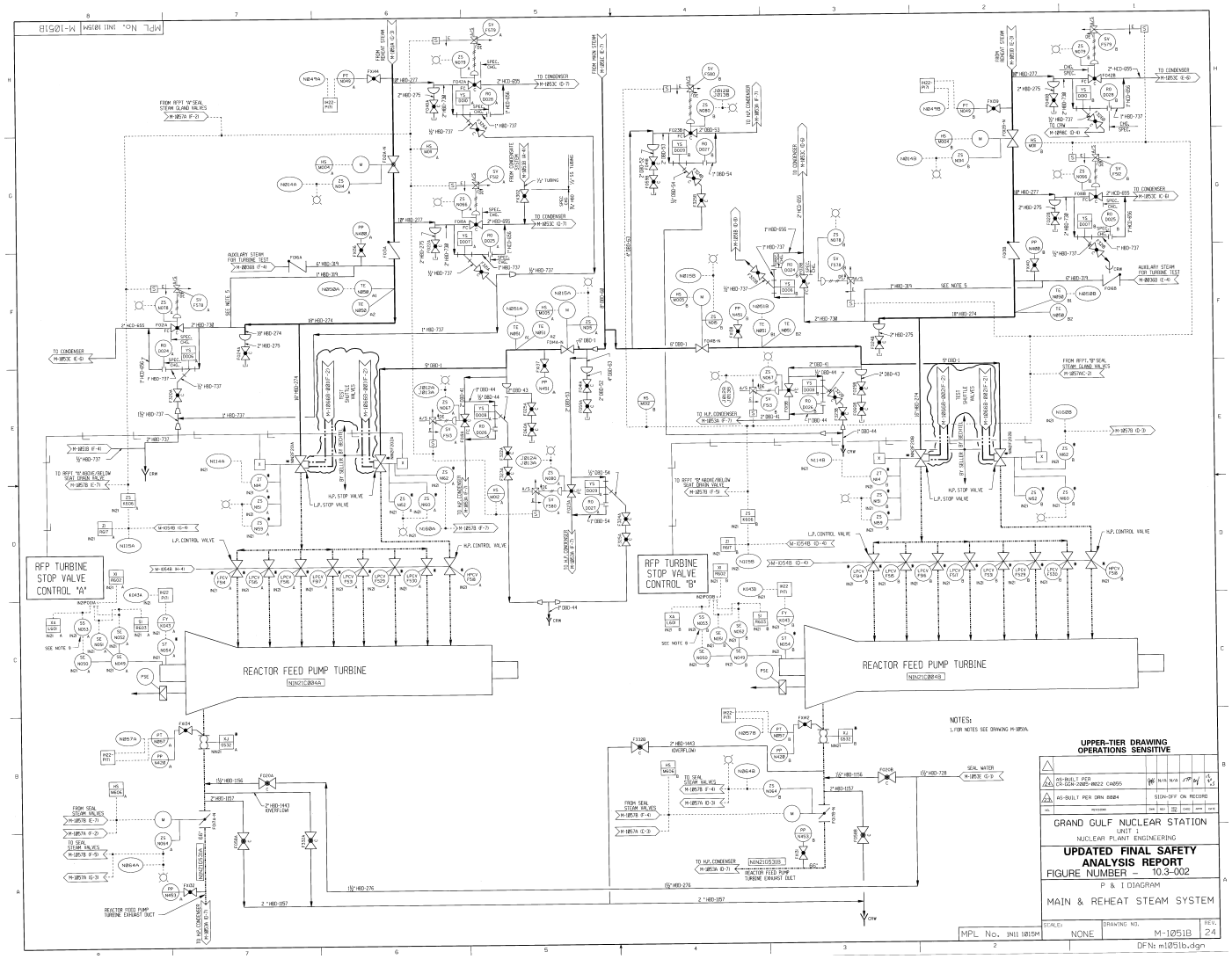
RFP TURBINE STOP VALVE CONTROL "A"
RFP TURBINE STOP VALVE CONTROL "B"
REACTOR FEED PUMP TURBINE
REACTOR FEED PUMP TURBINE
NOTES:
1. FOR NOTES SEE DRAWING M-1050A
UPPER-TIER DRAWING OPERATIONS SENSITIVE
GRAND GULF NUCLEAR STATION
UNIT 1
NUCLEAR PLANT ENGINEERING
UPDATED FINAL SAFETY ANALYSIS REPORT
FIGURE NUMBER – 10.3-002
P & I DIAGRAM
MAIN & REHEAT STEAM SYSTEM
SCALE: NONE
DRAWING NO. M-1051B
REV. 24
DFN: m105lb.dgn
MPL No. 1N11 1015M

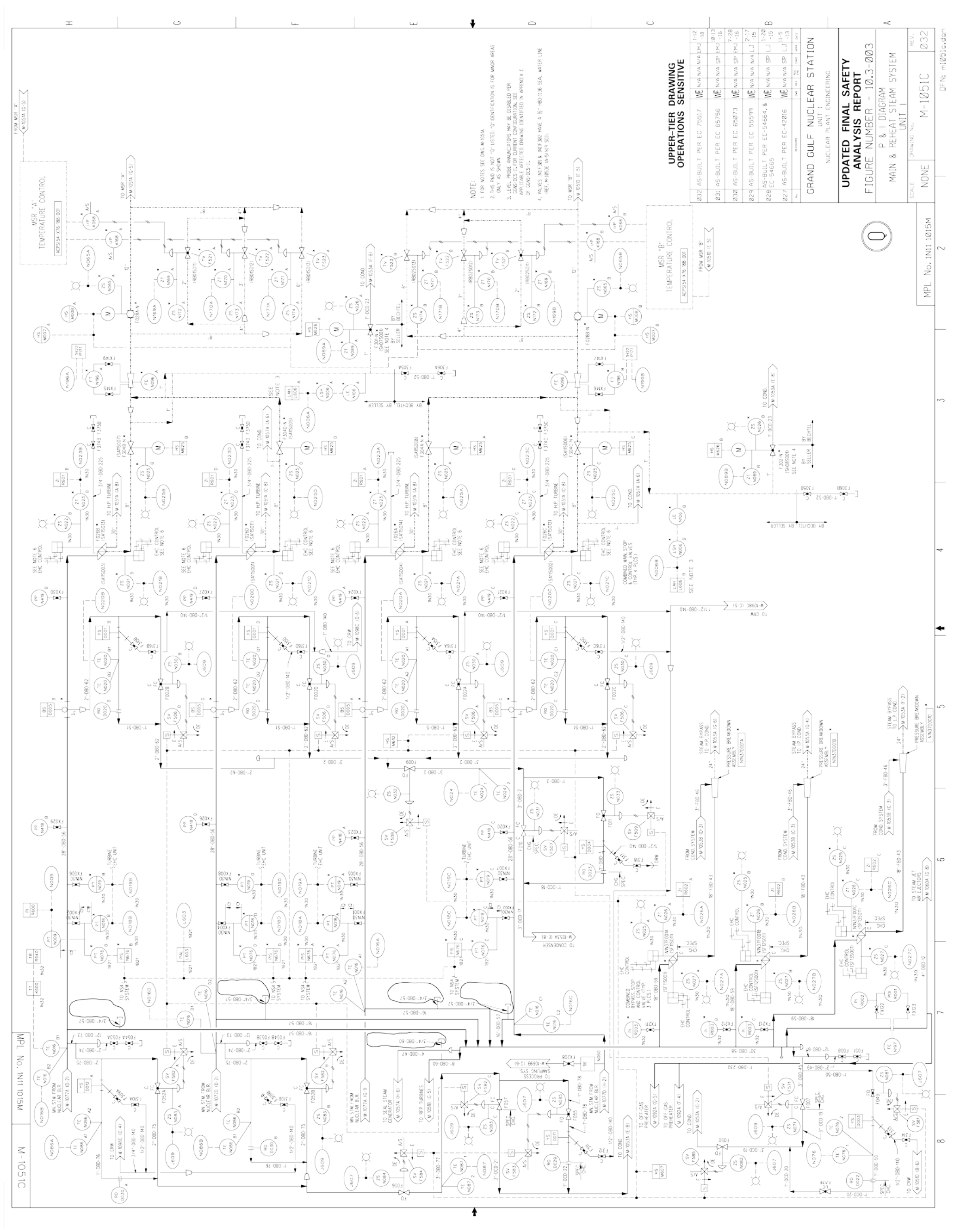
UPPER-TIER DRAWING
OPERATIONS SENSITIVE
GRAND GULF NUCLEAR STATION
UNIT 1
NUCLEAR PLANT ENGINEERING
UPDATED FINAL SAFETY
ANALYSIS REPORT
FIGURE NUMBER - 10.3-003
P & I DIAGRAM
MAIN & REHEAT STEAM SYSTEM
UNIT 1
NONE
M-1051C
032
MPL No. 1N11 1015M
MSR "A"
TEMPERATURE CONTROL
MSR "B"
TEMPERATURE CONTROL

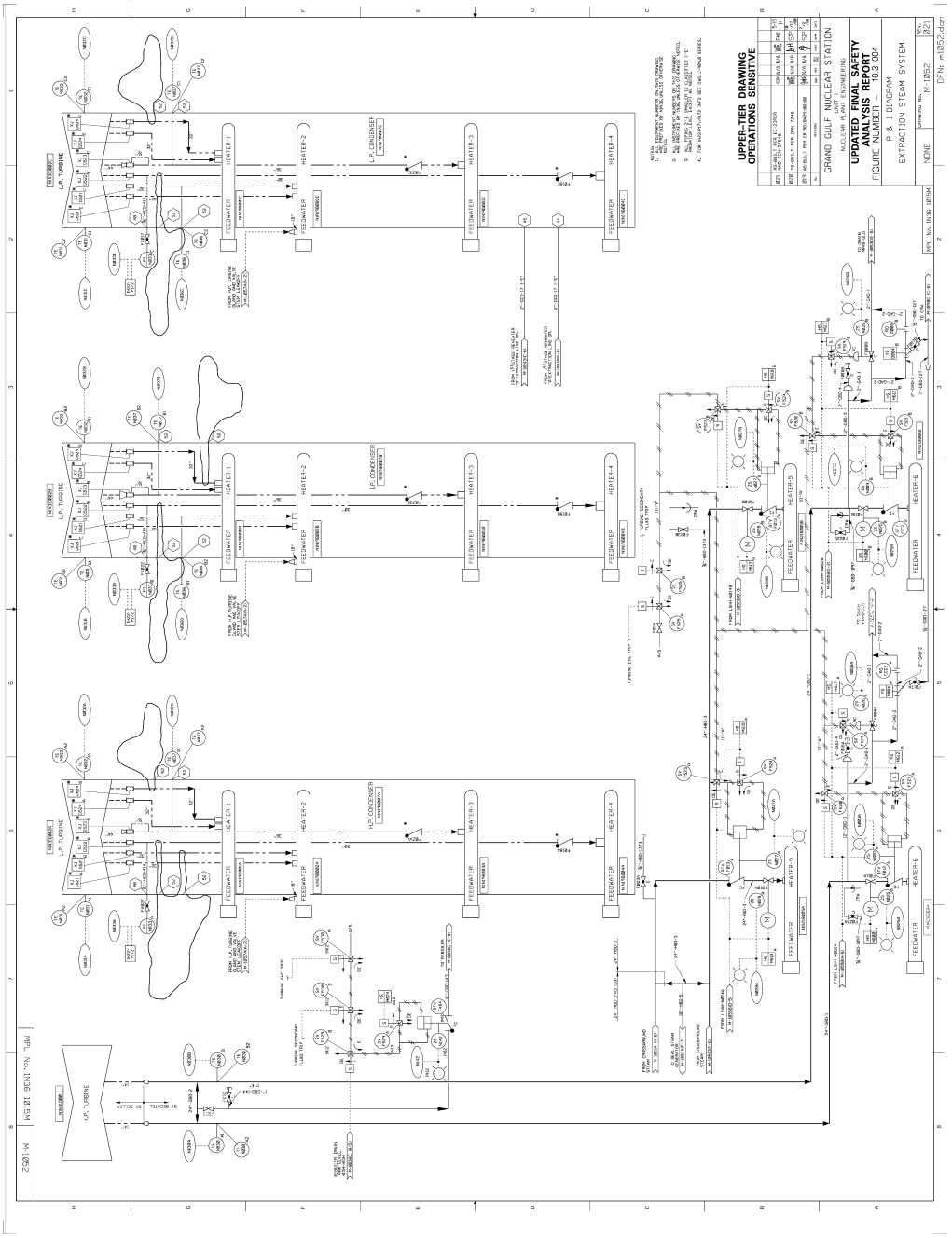
UPPER-TIER DRAWING
OPERATIONS SENSITIVE
GRAND GULF NUCLEAR STATION
UNIT 1
NUCLEAR POWER STATION
UPDATED FINAL SAFETY ANALYSIS REPORT
FIGURE NUMBER 10.3-004
P & I DIAGRAM
EXTRACTION STEAM SYSTEM
NONE
M-1052
DFN: m1052.dgn

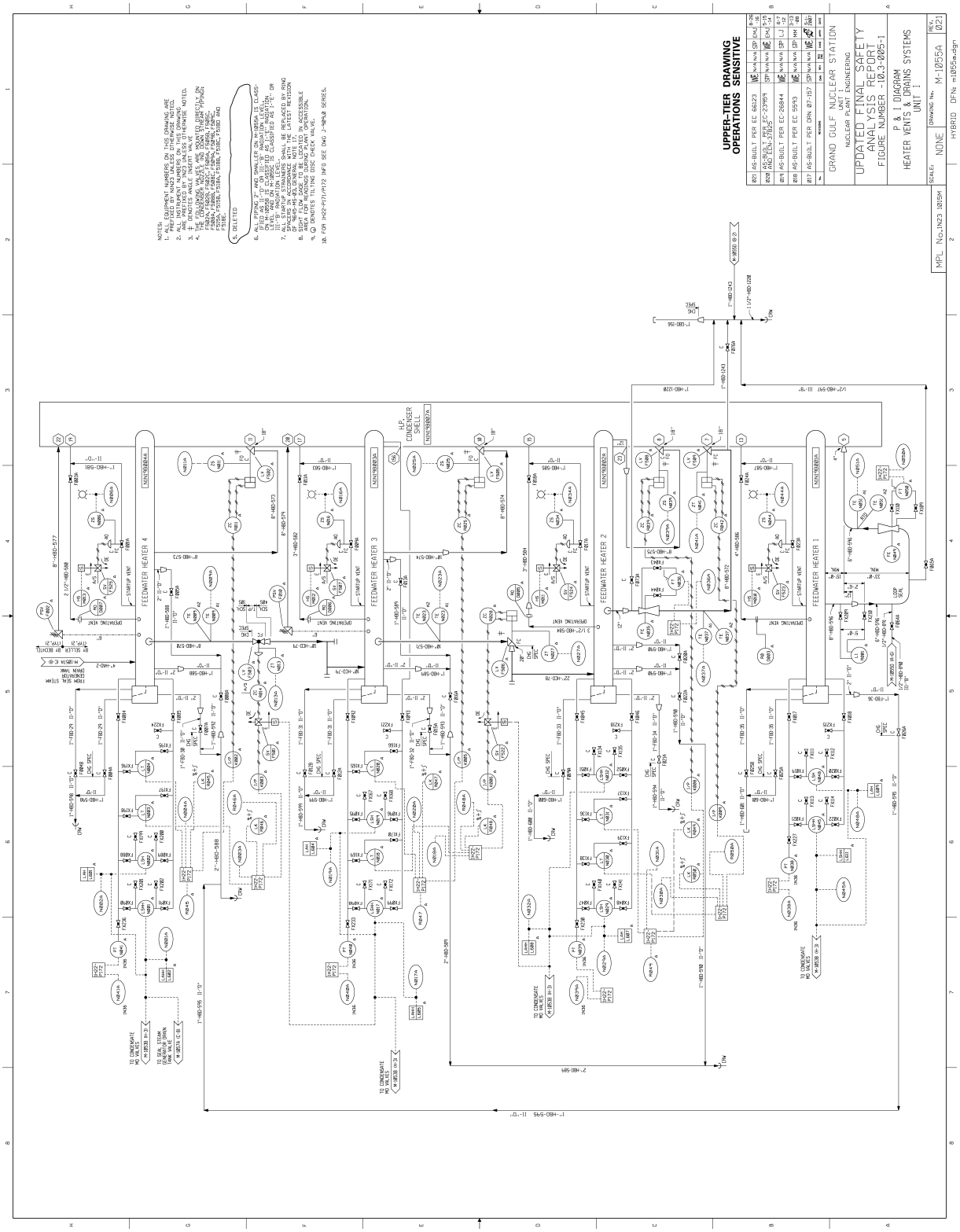

LBDCR 2016-249
LBDCR 2016-180

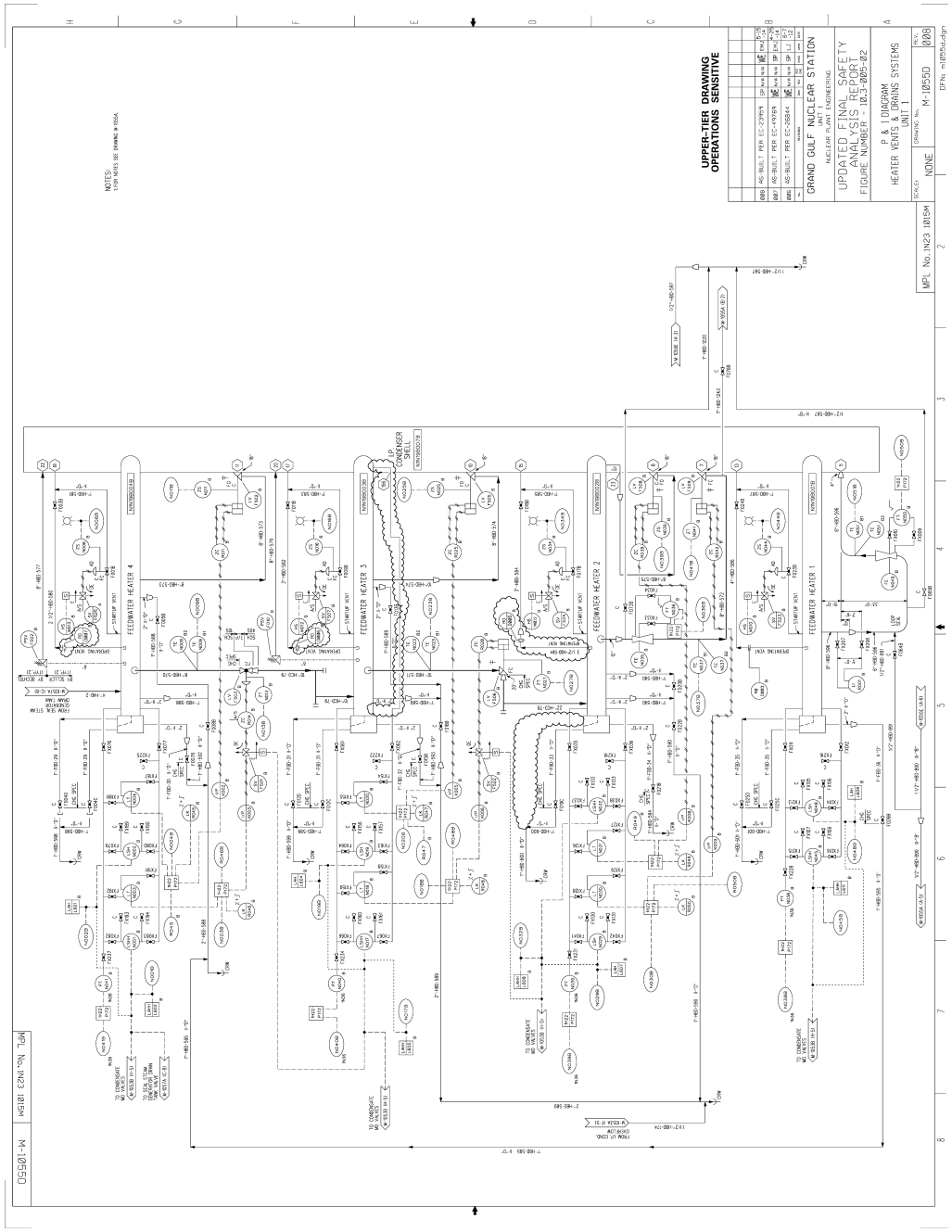
UPPER-TIER DRAWING
OPERATIONS SENSITIVE
GRAND GULF NUCLEAR STATION
UNIT 1
NUCLEAR PLANT ENGINEERING
UPDATED FINAL SAFETY
ANALYSIS REPORT
FIGURE NUMBER - 10.3-005-02
P & I DIAGRAM
HEATER VENTS & DRAINS SYSTEMS
UNIT 1
NONE
M-1055D
008
FEEDWATER HEATER 4
FEEDWATER HEATER 3
FEEDWATER HEATER 2
FEEDWATER HEATER 1
STARTUP VENT
DRAINING VENT
MPL No. 1N23 1015M
M-1055D

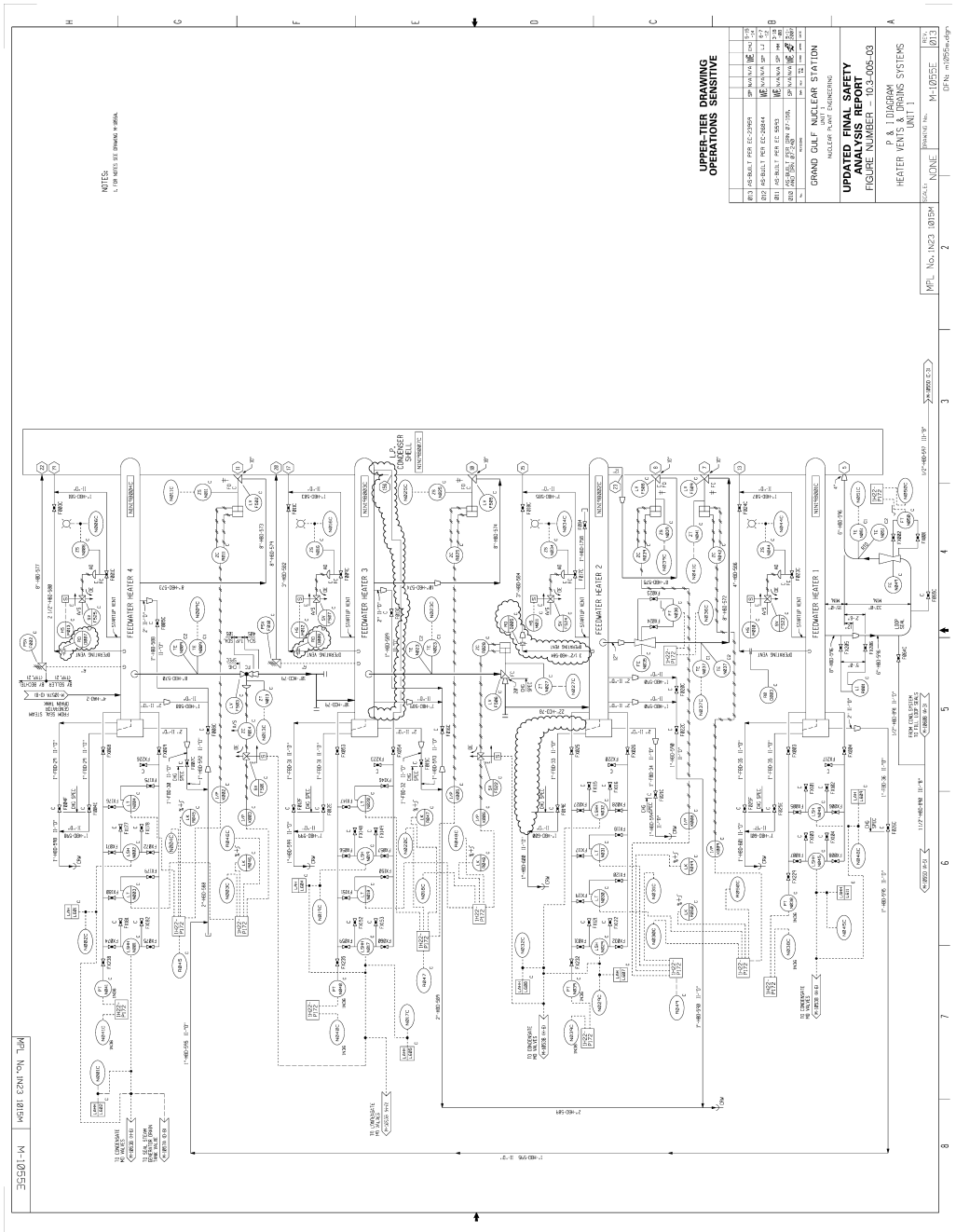
UPPER-TIER DRAWING
OPERATIONS SENSITIVE
NOTES:
1. FOR NOTES SEE SHEET M-1055A.
GRAND GULF NUCLEAR STATION
UNIT 1
NUCLEAR POWER ENGINEERING
UPDATED FINAL SAFETY ANALYSIS REPORT
FIGURE NUMBER 10.3-005-03
P & I DIAGRAM
HEATER VENTS & DRAINS SYSTEMS
UNIT 1
M-1055E
FEEDWATER HEATER 4
FEEDWATER HEATER 3
FEEDWATER HEATER 2
FEEDWATER HEATER 1
MPL No. 1N23 1015M

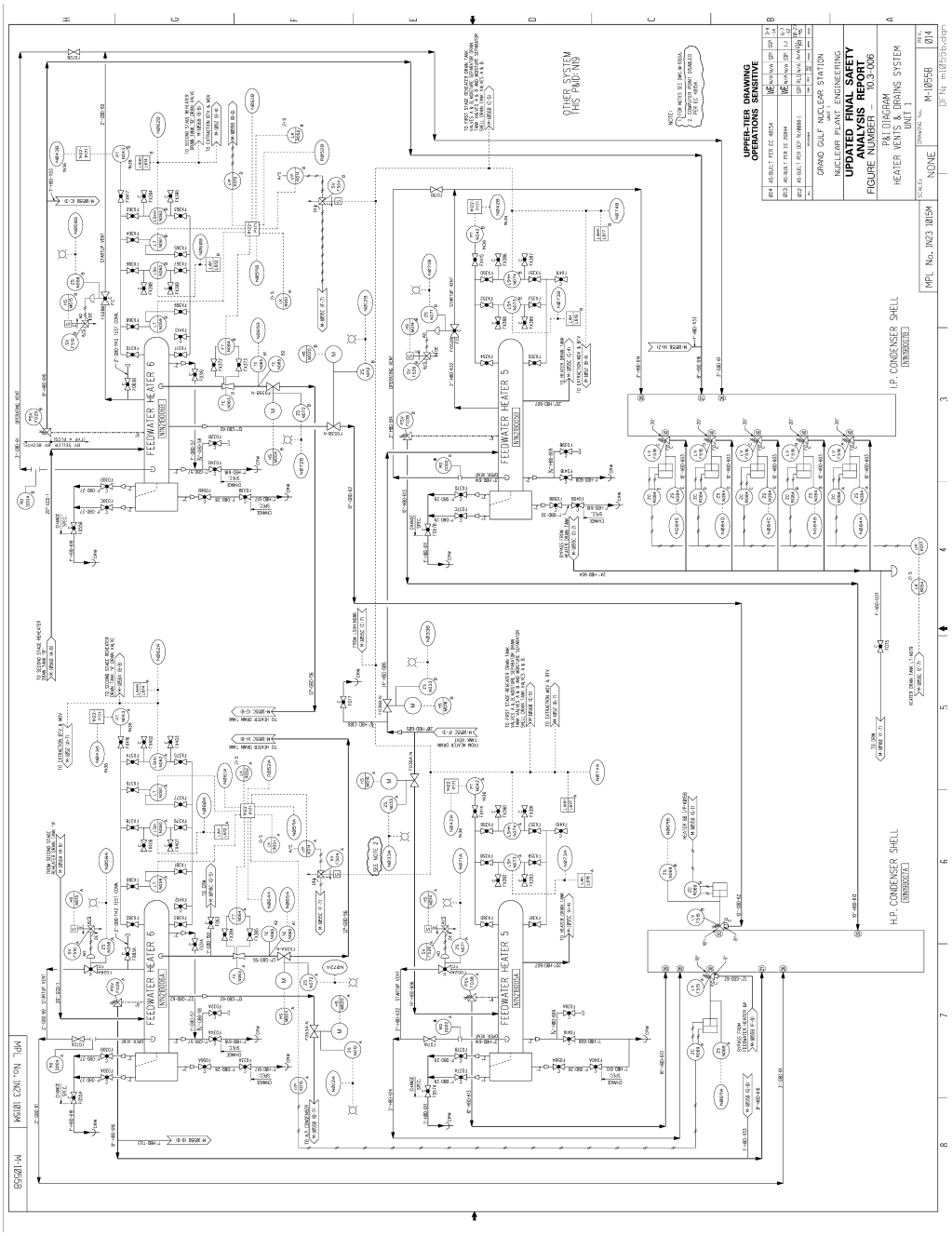
FEEDWATER HEATER 6
FEEDWATER HEATER 5
H.P. CONDENSER SHELL
I.P. CONDENSER SHELL
OTHER SYSTEM
THIS P&ID: N19
UPPER-TIER DRAWING
OPERATIONS SENSITIVE
UPDATED FINAL SAFETY
ANALYSIS REPORT
FIGURE NUMBER - 10.3-006
P&ID DIAGRAM
HEATER VENTS & DRAINS SYSTEM
UNIT 1
GRAND GULF NUCLEAR STATION
NUCLEAR PLANT ENGINEERING
M-1055B
014
NONE
MPL No. 1N23 1015M

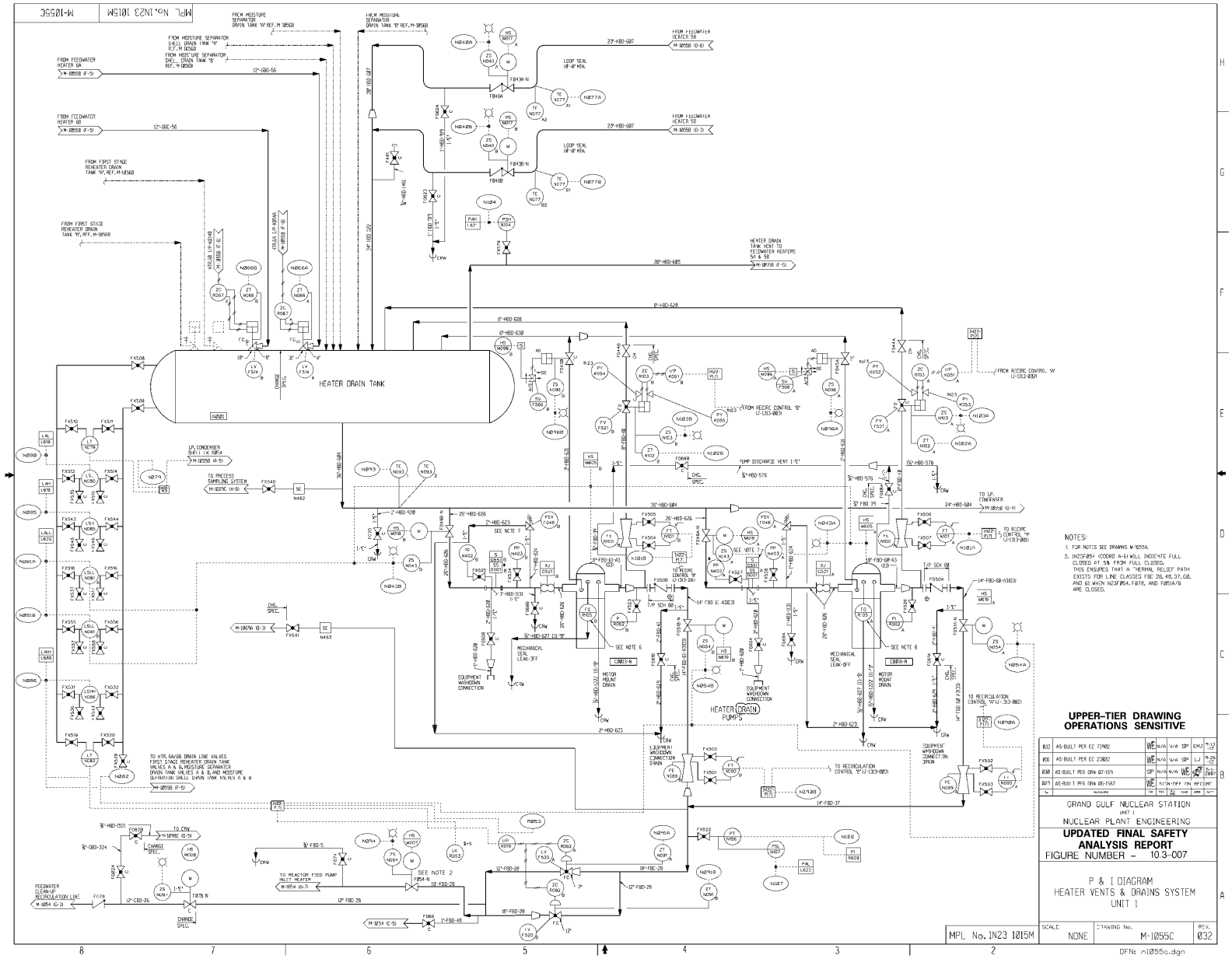
HEATER DRAIN TANK
HEATER DRAIN PUMPS
NOTES:
1. FOR NOTES SEE DRAWING M-1055A.
2. 1N23F054 (COORD A-6) WILL INDICATE FULL CLOSED AT 5% FROM FULL CLOSED. THIS ENSURES THAT A THERMAL RELIEF PATH EXISTS FOR LINE CLASSES FBC 28, 48, 37, C0, AND 61 WHEN N23F054, F078, AND F051A/B ARE CLOSED.
UPPER-TIER DRAWING OPERATIONS SENSITIVE
GRAND GULF NUCLEAR STATION
UNIT 1
NUCLEAR PLANT ENGINEERING
UPDATED FINAL SAFETY ANALYSIS REPORT
FIGURE NUMBER - 10.3-007
P & I DIAGRAM
HEATER VENTS & DRAINS SYSTEM
UNIT 1
MPL No. 1N23 1015M
SCALE NONE
DRAWING No. M-1055C
REV. 032
DFN: m1055c.dgn

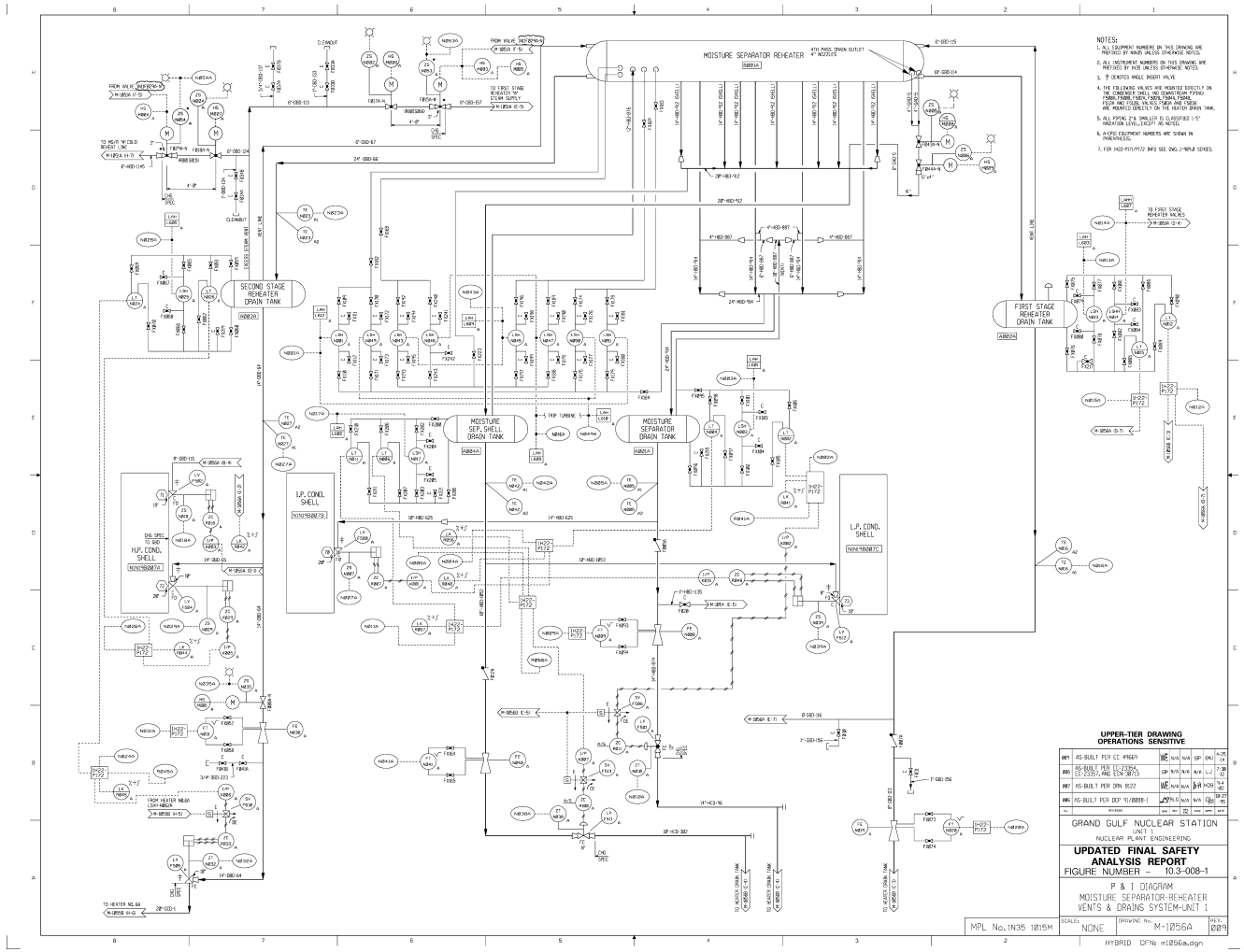
MOISTURE SEPARATOR REHEATER
SECOND STAGE REHEATER DRAIN TANK
FIRST STAGE REHEATER DRAIN TANK
MOISTURE SEP. SHELL DRAIN TANK
MOISTURE SEPARATOR DRAIN TANK
L.P. COND. SHELL
H.P. COND. SHELL
NOTES:
UPPER-TIER DRAWING OPERATIONS SENSITIVE
GRAND GULF NUCLEAR STATION
UNIT 1
NUCLEAR PLANT ENGINEERING
UPDATED FINAL SAFETY ANALYSIS REPORT
FIGURE NUMBER - 10.3-008-1
P & I DIAGRAM
MOISTURE SEPARATOR-REHEATER
VENTS & DRAINS SYSTEM-UNIT 1
SCALE: NONE
DRAWING No. M-1056A
REV. 009
MPL No. 1N35 1015M
HYBRID DFN: m1056a.dgn

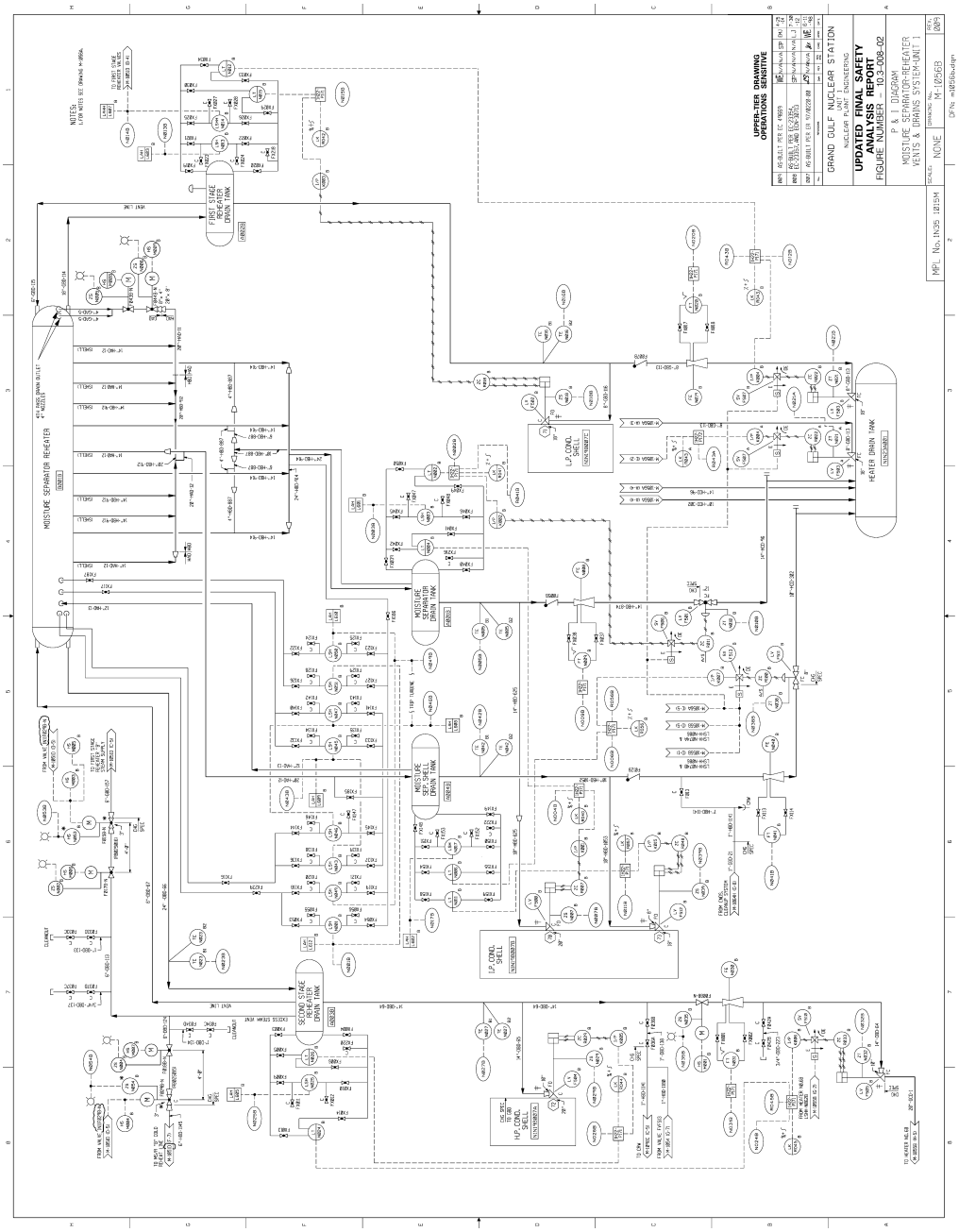
UPPER-TIER DRAWING
OPERATIONS SENSITIVE
GRAND GULF NUCLEAR STATION
NUCLEAR PLANT ENGINEERING
UPDATED FINAL SAFETY
ANALYSIS REPORT
FIGURE NUMBER 10.3-008-02
P & I DIAGRAM
MOISTURE SEPARATOR-REHEATER
HEATER DRAINS SYSTEM-UNIT 1
MOISTURE SEPARATOR REHEATER
FIRST STAGE REHEATER DRAIN TANK
SECOND STAGE REHEATER DRAIN TANK
MOISTURE SEPARATOR DRAIN TANK
HEATER DRAIN TANK
LP COND SHELL
HP COND SHELL
VENT LINE

10.4 OTHER FEATURES OF STEAM AND POWER CONVERSION SYSTEM

10.4.1 Main Condensers

10.4.1.1 Power Generation Design Bases

a. Performance Requirements

The objective of the main condenser is to provide the heat sink for the turbine exhaust steam, turbine bypass steam, and other turbine cycle flows, and to receive and collect flows for return to the reactor.

The main condenser is designed for the following conditions at normal full load:

Total main turbine exhaust steam, lb/hr	894×10^6
Total condensate outflow, lb/hr	10.658×10^6
Total condenser duty, Btu/hr	8.568×10^9
No. of condenser shells	3
Condenser pressure, in. Hg abs	2.26/2.86/3.68
Circulating water:	
Flow, gpm	572,000
No. of tube passes per shell	1
Inlet temperature, F	85
Outlet temperature, F	115

b. Turbine Bypass Steam

The main condenser is designed to accept up to 30.4 percent of the guaranteed reactor steam flow from the turbine bypass system described in subsection 10.4.4. This condition is accommodated without increasing the condenser back pressure to the turbine trip set point or exceeding the allowable turbine exhaust temperature.

c. Condensate Deaeration

The main condenser is designed to deaerate the condensate and provide the required water quality. The dissolved oxygen in the condenser hotwell effluent will be in accordance with Heat Exchange Institute standards or less under normal full-load operation.

d. Air Leakage

The main condenser is designed to minimize air leakage. Welded construction has been used for the condenser shells and, wherever practicable, for condenser shell connections and penetrations. Equipment and piping connected to the condenser shells are also designed to minimize air leakage to the main condenser.

The design capacity of the evacuation system described in subsection 10.4.2 has been determined in accordance with the recommendations of the Heat Exchange Institute, Standards for Steam Surface Condensers.

Performance of a Hydrogen Water Chemistry (HWC) program will have an effect on the amount of non-condensables in the condenser. At a design 102 scfm injection rate for hydrogen, the hydrogen concentration in the steam reduces slightly. Both radiolytic oxygen and radiolytic hydrogen, the products of the radiolytic decomposition of the primary coolant, are reduced to near zero at the design injection rate. Because of the reduced radiolytic gas flows, the total non-condensable gas flow rate in the offgas system will reduce slightly from normal water chemistry (NWC) to HWC conditions, as shown in the Table below, and assuming a 40 scfm in-leakage into the condenser:

	NWC (scfm)	HWC (scfm)
Radiolytic Hydrogen	105	0
Injected Hydrogen	0	102
Total Hydrogen	105	102
Radiolytic Oxygen	53	0
In Leakage Oxygen	8	8
Total Oxygen	61	8

Total Hydrogen	105	102
Total Oxygen	61	8
In-Leakage Nitrogen	32	32
Total Non-condensables	198	142
Oxygen Added to Offgas	0	51
Total Offgas Flow	198	193

e. Condensate Detention

The condenser hotwells are designed to store a sufficient volume of condensate to provide at least a 1.5-min. effective detention of the condensate for radioactive decay.

f. Design Codes

The condenser has been designed in accordance with the requirements of the Heat Exchange Institute, Standards for Steam Surface Condensers.

10.4.1.2 System Description

During plant operation, steam from the low-pressure turbine is exhausted directly downward into the condenser shells through exhaust openings in the bottom of the turbine casings and is condensed. The condenser consists of three shells, each serving one double-flow, low-pressure turbine section. The condenser also serves as a heat sink for several other flows, such as exhaust steam from the feed pump turbines, cascading heater drains, air ejector condenser drains, and seal steam condenser drains.

Other flows occurring periodically or continuously originate from the startup vents of the condensate pumps, condensate booster pumps and reactor feed pumps, minimum recirculation flows of the reactor feed pumps, condensate booster pumps and condensate pumps, feedwater line startup flushing, turbine drains, low-point drains, deaerating steam, and condensate makeup.

During transient conditions, the condenser is designed to receive turbine bypass steam and feedwater heater and drain tank high-level dumps. These drain tanks include the moisture separator, reheater, and feedwater heater drain tanks. The condenser is also

designed to receive relief valve discharges from moisture separator/reheater shells, feedwater heater shells, seal steam header, and various steam supply lines.

To prevent tube failure during operation of the turbine bypass, direct steam impingement on the tubes is prohibited by use of spargers to distribute the flow inside the condenser.

The condenser is cooled by the circulating water system described in subsection 10.4.5 which removes the heat rejected to the condenser.

The condensate is pumped from the intermediate pressure condenser shell hotwell by the condensate pumps described in subsection 10.4.7 and is thereby returned to the steam cycle.

The main condenser is a multipressure, three-shell, single pass, deaerating-type condenser with divided water boxes. All condenser tubes are made of stainless steel. The condenser shells are supported on the turbine foundation mat, with expansion joints provided between each turbine exhaust opening and the steam inlet connections of the condenser shells.

The condenser hotwells have baffles to ensure a minimum detention of 1.5 min. for all condensate from the time it enters the hotwells until it is removed by the condensate pumps.

Valves are provided in the circulating water system to permit either half of the condenser to be removed from service.

Air leakage and noncondensable gases, including hydrogen and oxygen gases contained in the turbine exhaust steam due to dissociation of water in the reactor, are collected in the condenser and passed through the air-cooling section of the condenser. They are removed by the main condenser evacuation system described in subsection 10.4.2.

Before leaving the condenser, the condensate is deaerated to reduce the level of dissolved oxygen to the required quality.

Since the main condenser operates at a vacuum, any leakage is into the shell side of the main condenser and radioactive leakage to the atmosphere cannot occur. Provision is made for detection of circulating water leakage into the shell side of the main condenser.

At startup, steam is admitted to each condenser shell to assist in condensate deaeration.

10.4.1.3 System Evaluation

During operation, radioactive steam, gases, and condensate are present in the shells of the main condenser. The anticipated inventory of radioactive contaminants during operation and shutdown is discussed in Sections 11.1 and 11.3. Necessary shielding and controlled access for the main condenser are provided (see Sections 12.1 and 12.3).

Condensate is detained in the main condenser for a minimum of 1.5 min. to permit radioactive decay before the condensate enters the condensate system.

Hydrogen buildup during operation is not expected to occur due to provisions for continuous evacuation of the noncondensibles from the main condenser. The air cooling sections of the main condenser are centrally located in each tube field and are designed to provide for free admission of the noncondensibles. The noncondensibles are removed from each condenser shell via two lines. Each line originates at the air cooling section inside each condenser shell and is routed through the condenser shell for welding to the adjacent shell and then finally to the steam jet air ejector suction piping. The condenser air removal ejector system exhausts the noncondensibles to the offgas system by means of a steam jet air ejector unit. During shutdown, significant hydrogen buildup in the main condenser will not occur as the main condenser will then be isolated from potential sources of hydrogen.

Main condenser tubeside water quality is maintained within limits that prevent long-term corrosion of the tubes and components. The construction materials used for the main condenser tubes and components are equal in the electromotive force of materials, thereby preventing galvanic corrosion. For example, condenser tubes are stainless steel material; tube sheets and waterboxes are carbon steel material.

The main condensers are not required to effect or support the safe shutdown of the reactor or to perform in the operation of reactor safety features.

Exhaust hood overheating protection is provided by desuperheating sprays located just downstream of the last stage blades of the turbine.

The loss of main condenser vacuum will cause the turbine to be tripped.

The turbine cross-around piping and moisture separator/ reheaters are protected from overpressure by safety relief valves which discharge to the main condenser. The minimum setting of the relief valves is 10 percent above the pressure existing at the high-pressure turbine exhaust when the high-pressure section of the turbine is passing maximum calculated flow with 105 percent rated pressure and normal operating conditions.

Each low-pressure turbine receives steam from the high-pressure turbine through the moisture separators, steam reheaters, and the low-pressure turbine stop and control valves. The possible types of conditions that could lead to transient conditions requiring the operation of the safety relief valves involve the sudden closing of the low-pressure turbine stop and control valves. This sudden closing may occur in the event of a sudden generator load rejection, emergency turbine trip, or malfunction of the low-pressure turbine stop and control valves. During discharge of the safety relief valves to the main condenser, there is a corresponding reduction in the low-pressure turbine exhaust flow to the main condenser. Therefore, the total heat load on the main condenser is not increased appreciably as a result of the operation of the safety relief valves.

Should the turbine stop, control, or bypass valves fail to close on loss of condenser vacuum, four rupture diaphragms on each low-pressure turbine section protect the condenser and turbine exhaust hoods against overpressure.

10.4.1.4 Tests and Inspections

[HISTORICAL INFORMATION] [Each condenser shell is to receive a field hydrostatic test before initial operation. This test will consist of filling the condenser shell with water and, at the resulting static head, inspecting all tube joints, accessible welds, and surfaces for visible leakage and/or excessive deflection. As an alternative to testing with water, a low-pressure air and soap bubble test may be used.

Each condenser waterbox is to receive a field hydrostatic test with all joints and external surfaces inspected for leakage.]

The condenser is provided with access manways to permit entry into the waterboxes (for inspection of tubes and tube joints), into the hotwells, and into the condenser shells to permit internal inspection of the condenser. Inspection can be undertaken in the event there are indications of condenser operating abnormalities (such as tube leaks), or for general inspection purposes. Each condenser will be inspected during refueling outages. This inspection will consist of draining the condenser, removing the inspection covers, and inspecting accessible areas for waterbox fouling, impingement erosion, internal structural damage, and cleanliness. Additionally, a detailed inspection will be conducted periodically based on general industry practices.

10.4.1.5 Instrumentation Application

Each condenser shell is provided with hotwell level and condenser pressure indicators and alarms in the control room.

The condensate level in the condenser hotwell will be maintained within proper limits by automatic controls which provide for transfer of condensate to and from the condensate storage tank, as needed, to satisfy the requirements of the steam system.

Condensate temperature is monitored in the outlet lines to the condensate pumps.

Turbine exhaust hood temperature is monitored and controlled with water sprays to provide protection from exhaust hood overheating.

A high condenser back-pressure alarm is provided at approximately 6 in. Hg absolute.

Turbine trip is activated on loss of main condenser vacuum, with condenser back pressure reaching or exceeding a set point of approximately 9 in. Hg absolute.

Water box pressure and temperature measurements are provided.

Conductivity elements detect leakage of circulating water into the condenser steam space.

10.4.2 Condenser Air Removal System

10.4.2.1 Power Generation Design Bases

a. The condenser air removal system is designed to achieve and maintain a vacuum in the main condenser to permit plant startup and power generation.

b. The condenser air removal system is designed to remove the noncondensable gases from the main condenser, including air inleakage and dissociation products originating in the reactor and to exhaust them to the gaseous radwaste system.

10.4.2.2 System Description

The condenser air removal system consists of two 100-percent capacity, single element, two stage, steam-jet air ejector units, complete with inter-condenser. The two stages of the steam jet air ejector units are used for normal plant operation. Three one-third capacity mechanical vacuum pumps are for use during startup. The system is shown schematically in Figures 10.4-1 and 10.4-2.

During startup, when the desired rate of air and gas removal exceeds the capacity of the steam jet air ejectors or when the steam pressure is not adequate to operate the air ejector units, the mechanical vacuum pumps are used to remove the main condenser air inleakage and offgases. The discharge from the vacuum pumps is routed to the turbine building ventilation system. The offgases from the vacuum pumps are discharged directly to the environment since the pumps are in service only during startups when there is little or no radioactive gas present.

The turbine building ventilation exhaust stack is monitored for radioactivity to stop the vacuum pumps and alert the control room operator if safe release limits are being reached.

The steam-jet air ejector may be placed into service to remove the gases from the main condenser after a pressure of 5- to 10-inch Hg abs. is established in the main condenser by the mechanical vacuum pumps. Main steam, reduced in pressure by an automatic steam-pressure reducing valve, is supplied as the driving medium to the two-stage air ejectors. The first stage takes suction from the main condenser and exhausts the gas vapor mixture to the inter-condenser. The second stage takes suction from the inter-

condenser and exhausts the gas vapor mixture to the gaseous radwaste system. The inter-condenser is cooled by the plant service water system. The resulting condensate from the air ejector condenser is drained back to the main condenser.

10.4.2.3 System Evaluation

The system has no safety-related function as discussed in Section 3.2. Failure of the system will not compromise any safety-related system or component and will not prevent safe reactor shutdown.

As long as the condenser air removal system operates normally and main condenser vacuum is maintained, there is no effect on the reactor coolant system. If the main condenser pressure increases to a predetermined value, a turbine trip is initiated. Refer to Chapter 15 for the effect of a turbine trip on reactor operation.

The offgas from the main condenser is one source of radioactive gas in the plant. It will normally include the following activation gases: nitrogen-16, oxygen-19, and nitrogen-13, plus the radioactive noble gas parents of strontium-89, strontium-90, and cesium-137. The largest contribution to the main condenser off-gas activity will come from the nitrogen-16 source. An inventory of radioactive contaminants in the effluent from the steam-jet air ejector has been evaluated in Section 11.3, Gaseous Radwaste System.

The condenser air removal system is not designed to withstand the effects of an explosion. The normal operation of the steam jet air ejectors will prevent the process stream from attaining flammable limits. In the event of inadequate steam flow necessary to prevent flammable concentrations of hydrogen, redundant instrumentation is being provided that will automatically isolate the condenser air removal system. The instrumentation and its operation is described in subsection 10.4.2.5.

10.4.2.4 Tests and Inspections

[HISTORICAL INFORMATION] [Testing and inspecting of the system were performed prior to initial plant operation. Components of the system are continuously monitored during operation to ensure satisfactory operation.] Periodic tests and inspections of the system are performed in conjunction with maintenance outages.

10.4.2.5 Instrumentation Application

Sufficient steam is available to maintain a nonexplosive concentration of less than four percent by volume. Redundant flow measuring instrumentation is provided to measure the steam flow. If the steam flow falls below the specified value, the system will automatically isolate to prevent a buildup of hydrogen. Automatic isolation of the condenser air removal system from the main condenser is alarmed in the control room. Once sufficient steam is again available, the isolation valve can be reopened.

Gas samples taken between the inter-condenser and the second stage steam jet air ejector can be routed to the offgas sampling panels for hydrogen concentration chemical analysis.

The mechanical vacuum pump inlet isolation valve will close upon a main steam line high-radiation signal. The mechanical pump will continue to run in dryout mode for fifteen minutes and then stop.

10.4.3 Turbine Gland Sealing System

10.4.3.1 Power Generation Design Bases

a. The objective of the turbine gland sealing system is to prevent air leakage into and radioactive steam leakage out of the main and reactor feedpump (RFP) turbines, combined main and RFP stop and control valves, LP stop and control valves, and combined bypass stop and control valves.

b. The turbine gland sealing system is designed to provide the means of sealing with nonradioactive steam the main and RFP turbine shaft glands and valve stems (main stop and control, LP turbine stop and control, and bypass valves). The condensed steam from the sealing system will be returned to the main condenser, and the noncondensable gases entrained with the condensed steam will be exhausted to the turbine building vent stack.

10.4.3.2 System Description

The turbine gland sealing system consists of a nonradioactive auxiliary steam source, a separate seal steam generator, seal steam pressure regulators, seal steam header, one full capacity seal steam condenser, two full capacity seal steam condenser

exhausters, and the associated piping, valves, controls, and instrumentation. Figures 10.4-3 and 10.4-4 include a piping and instrumentation diagram of the system.

Nonradioactive sealing steam for the RFP turbine shaft glands, RFP turbine stop and control valves and the main turbine shaft glands and valve stem glands (stop, control, and bypass valves) is supplied from the seal steam header. The source of nonradioactive sealing steam is a separate seal steam generator during normal plant operation. The unit auxiliary boiler is no longer in service.

The outer ends of all glands and valve stems are routed to the seal steam condenser which is maintained at a slight vacuum by the exhauster. During plant operation, the seal steam condenser and one motor-driven exhauster will be in operation. The exhauster discharges gland air in-leakage to the atmosphere. The seal steam condenser is cooled by the turbine building cooling water system.

The seal steam generator is a shell-and-tube heat exchanger designed to provide a continuous supply of clean sealing steam at approximately 79 psig to the seal steam pressure regulators. The heating steam is supplied at light loads by the main steam line and at high loads from turbine extraction. The regulators deliver steam to the clean steam header at a constant pressure of approximately 6 in. water gauge.

The seal steam condenser consists of a single heat exchanger that recovers condensate from the mixture of air and steam which is drawn from the outermost sections of the turbine and valve seals and exhausts the air to the atmosphere by means of the motor-driven exhauster mounted on top of the seal steam condenser. The turbine building cooling water system is used as the cooling medium. The seal steam condenser is designed for cooling water of 250 F and 150 psig.

The motor-driven exhauster is designed to discharge the air in-leakage to the atmosphere via the turbine building ventilation system. The exhauster is designed to pass the maximum flow with no more than 0.5-inch Hg gauge discharge pressure. The exhauster also maintains approximately a 12-inch water vacuum on the outlet of the shaft and valve seals.

10.4.3.3 System Evaluation

The turbine gland sealing system is designed to provide a continuous supply of clean, nonradioactive steam at approximately 6 in. water gauge to the main turbine shaft glands and the valve stems. The high-pressure turbine shaft seal must accommodate a range of turbine shell pressures from full vacuum to approximately 120 psia. The low-pressure turbine shaft seals operate against a vacuum at all times. The sealing steam enters the high- and low-pressure turbine shaft seals and the valve stem seals through an annulus. The steam is exhausted to the seal steam condenser via the vent annulus, which is maintained at a slight vacuum (about 12 inches water) or is piped to the No. 2 low-pressure feedwater heater or main condenser.

Since a supply of clean, nonradioactive steam is available from the seal steam generator, the turbine gland sealing system should always have a supply of clean, nonradioactive sealing steam. In addition, should the seal steam condenser fail to function, the sealing steam would continue to flow into the turbine, and it would be the only steam (nonradioactive) which could flow out of the glands and into the turbine building. Therefore, radioactive steam release to the environment is unlikely. (See Sections 11.3 and 15.7 for further details on the radiological evaluation of the seal system.)

A failed seal steam condenser tube can be plugged during operation by isolating the condenser water side. The exhauster will continue to operate during this time.

Relief valves on the seal steam header prevent excessive seal steam pressure. The valves are vented to the high pressure turbine condenser shell.

10.4.3.4 Tests and Inspections

Testing and inspection of the system was performed prior to initial plant operation. Components of the system are continuously monitored during operation to ensure that they are functioning satisfactorily. Periodic tests and inspections may be performed in conjunction with maintenance outages.

10.4.3.5 Instrumentation Application

Both the shell and tube sides of the seal steam generator are controlled by level-control valves, the condensate (shell) side by maintaining water surrounding the tubes, and the steam (tube) side by maintaining the water level in the seal steam generator drain tank. The flow of heating steam is regulated by the seal steam pressure control.

Liquid level in the seal steam condenser is maintained by a loop seal connected to the main condenser.

The turbine building ventilation exhaust is monitored for radiation levels and an alarm annunciates in the control room if high levels are present. The seal steam condenser exhausters discharge to the turbine building ventilation system and, therefore, should the seal steam generator develop a tube leak, the radioactive steam leaking into the turbine gland sealing system would be detected.

10.4.4 Turbine Bypass System

10.4.4.1 Power Generation Design Bases

a. The turbine bypass system is designed to control reactor pressure during reactor heat-up to rated pressure while the turbine is being brought up to speed and synchronized during: 1) power operation when the reactor steam generation exceeds the transient turbine steam requirements; and 2) cool down of the reactor.

b. The turbine bypass system capacity is designed for 30.4 percent of the guaranteed reactor steam flow. The bypass system will accommodate a 30.4-percent load rejection. The bypass system works in conjunction with the turbine controls (pressure control). (See subsection 7.7.1.5, Pressure Control and Turbine-Generator System.)

c. The turbine bypass valves are capable of remote manual operation in their normal sequence, during plant startup and shutdown, and for exercising to verify that the valves are operable.

10.4.4.2 System Description

The turbine bypass system is shown in Figure 10.3-3. The turbine bypass system consists of three hydraulically operated combined stop and control valves which are mounted separately on each bypass to the condenser. They are operated automatically and in parallel. The first bypass valve leads the other two by 10 percent. The remaining valves operate in parallel. The bypass piping is connected to the main steam lines upstream of the turbine main stop valves. Each bypass valve outlet is piped directly to the main condenser, and a pressure breakdown assembly using a water spray is located at each condenser connection.

The turbine bypass valves are opened by a signal received from the turbine control system initial pressure regulator whenever the actual steam pressure exceeds the preset steam pressure by a small margin. This occurs when the amount of steam generated by the reactor cannot be entirely used by the turbine. The bypass stop valves automatically trip closed whenever the vacuum in the main condenser falls below a preset value. The bypass stop and control valves will also trip on the loss of EHC, or on the loss of control power.

The turbine is protected against the loss of vacuum by a hydraulic low-vacuum trip and an electrical low-vacuum trip. Both of these devices monitor all three condenser sections and are fully testable with the ATT while the unit is in operation. Both the hydraulic and electrical low-vacuum trips provide an alarm at approximately 6.0" Hg absolute, and trip the turbine at approximately 9.0" Hg absolute. Reactor scram is initiated by the closure of the main stop valves. The bypass control valves are also opened with the turbine trip to control reactor pressure. If condenser pressures continue to rise, the bypass stop valves are tripped shut and the main steam isolation valves are closed.

To protect the LP turbines from overpressure as the result of bypass system operation, each bypass control valve control system is provided with its own hydraulic low-vacuum trip and an electrical low-vacuum trip. All of these hydraulic and electrical low-vacuum trips will trip the bypass stop valves closed when condenser pressure exceeds 18.0" Hg absolute.

The LP turbine casings are additionally protected against overpressurization by four atmospheric relief diaphragms on each LP turbine. These atmospheric relief diaphragms rupture at approximately 18.5 psia.

The bypass stop and control valve is shown on Figure 10.4-14; numbers in parentheses denote components shown on Figures 10.4-14 through 10.4-16.

The bypass stop and control valve dumps steam from the main steam line into the condenser. The control valve is normally closed during turbine operation and opens to dump steam upon receiving a signal from the bypass control unit whenever the steam generated in the reactor exceeds that required by the turbine.

The stop valve is normally open during operation but may be closed to permit testing the control valve without disturbing the reactor pressure control or dumping steam unnecessarily during the testing process. The stop valve may also be tripped closed to prevent steam flow to the condenser if required.

The stop and control valves are contained in one casing with the stems arranged on a horizontal plane, and at right angles to each other. This provides a favorable routing for the bypass steam piping and good accessibility to the valves for maintenance.

The stop valve is provided with a pilot valve (7) to reduce the force required to open the stop valve against full steam pressure. The main valve cone (8) is back seated against the valve body cover (6) in the full open position to limit valve stem leakage under operating conditions. The valve stem is also steam sealed, with a leak-off connection for active steam, a feed connection for inactive sealing steam, and a leak-off connection for inactive sealing steam. The steam sealing system is backed up with soft renewable packing (3) to seal the stem externally.

The stop valve is opened hydraulically and closed by spring force. For detail of the stop valve actuator, refer to Figure 10.4-15.

The control valve stem and cone are manufactured in one piece. The guiding and sealing of the control valve stem are essentially the same as described for the stop valve except there is no back seat, since this valve is normally closed during operation.

The control valve is opened by control fluid pressure and closed by spring force. For details of the control valve actuator, refer to Figure 10.4-16. The position of the control valve is determined by control fluid pressure under the operating piston, as determined by the bypass controller.

The bypass stop valve actuator is shown on Figure 10.4-15. The actuator opens the bypass stop valve hydraulically and closes it mechanically by spring force upon receipt of a signal from the bypass starting device.

The bypass stop valve is controlled by the piston (6) and actuator rod (5) according to the position of the pilot valve (3). The piston is loaded on the one side by the disc springs (7) and on the other by the control fluid a. When the bypass fluid b is not pressurized, the pilot valve (3) remains in the end position shown due to the spring (1) force. This means that control fluid a cannot flow under piston (6) and the bypass stop valve is closed by force of the disc spring. When bypass starting fluid is fed to connection b, the pilot valve is lifted so that control fluid can flow under the piston and the bypass stop valve is opened.

If the bypass starting fluid pressure under the pilot valve is again reduced, the chamber under the piston is depressurized as a result of repositioning the pilot valve (3), causing the bypass stop valve to close abruptly due to the force of the disc spring.

The bypass control valve actuator is shown on Figure 10.4-16. The steam flowing from the reactor which is not required under certain operating conditions is dumped to the condenser by the bypass control valves. The flow of steam to the condenser is thus regulated by varying the lift of the bypass control valve by means of its actuator.

During normal operation, the bypass control valve is closed. The disc springs (4) are compressed by the control fluid pressure connection (a) acting on the piston (11). As the disc springs act in the opening direction, the bypass control valves are opened rapidly. The position of the piston (11) and thus the opening of the bypass control valve is determined either by the electrical or hydraulic pilot system, according to the electrical signal occurring at the servovalve (12) or the bypass signal fluid pressure at the auxiliary pilot valve (14). Normally, only the electrical control system is effective. Should this pilot control

fail, however, the hydraulic control comes into action. The pilot systems direct the control fluid over or under the pilot pistons (8 and 13).

The piston (2), which is loaded by the bypass startup fluid (d) is held against the force of the helical spring (3) in the position shown in Figure 10.4-16. On failure of the control fluid supply or when a protective device is actuated, bypass startup fluid (d) is cut off which causes the space under the piston (2) to be depressurized and the actuator piston rod (5) is moved into the closed position by the helical spring (3) via the piston (2) and the limiting disc (1).

In the electric mode, when the bypass pressure controller gives the order to open or close the bypass valve, the servovalve (12) passes the electrical signals hydraulically to the pilot piston (8). This allows control fluid (al) to flow on one side of the pilot piston (8) while the other side of the piston is simultaneously connected with the drain. The pilot piston is returned to its neutral position by the feedback signal provided by the position transducer (21) and the bypass pressure controller.

If one or more of the individual electric control systems malfunctions, they are switched off and the hydraulic control switched on. Under these conditions the auxiliary pilot valve (14) will position the pilot piston (13) by admitting control fluid (a_2).

During bypass operation in the hydraulic mode, when the bypass control valve is steady at any particular valve position, the auxiliary pilot valve (14) is in its center position (see Figure 10.4-16). The forces exerted by the spring (15) and the signal fluid pressure acting on the pilot valve are in equilibrium. If the bypass control fluid pressure changes, the pilot valves move, allowing the pilot piston (13) to be loaded on one side with control fluid (a_2). The lift of the pilot piston returns the pilot valve (14) to its center position via the feedback lever (16), maintaining the proportionality between the control fluid pressure and the pilot piston travel. The degree of proportionality of the pilot control system is adjusted by varying the feedback lever pilot.

The pilot valve (14) is continuously rotated by means of a disc with tangential bores from which control fluid flows, in order to maintain freedom of movement of the valve.

According to the electric or hydraulic signal, the movement of the particular pilot piston in action (8 or 13) deflects the main pilot valve (7) from its center position by means of a lever (9) so that control fluid (a) drains from the space above the piston (11) into drain (c) and the disc springs open the bypass control valve. The main pilot valve (7) is then returned to the center position by means of the feedback lever (10), the required valve position being achieved by the state of equilibrium between spring and piston force.

When the valve opens quickly, the speed of the actuator piston rod (5) is reduced at the end of its travel. This happens when the piston (11) enters the recess in the casing, and the control fluid can only escape via the annular gap around the piston and through the bypass port.

Any pulsations in the secondary fluid pressure are damped out by passing the secondary fluid through a capillary tube (18) before it enters the auxiliary pilot valve. Ventilation is ensured by an orifice in the screw plug (20) and holes bored in the damping device casing (see Figure 10.4-16, Section C-C).

The following condition effects closure of the bypass stop and control valves:

1. Low vacuum

Low vacuum criteria is independently made up twice and separately for each of the condensers. One is formed electrically and the other mechanically/hydraulically. It operates in a 1-out-of-2 manner.

For making up this signal the following equipment is provided for each condenser:

1. One hydraulic pressure switch with an interlock valve, One electric pressure switch with a solenoid valve for monitoring vacuum
   Operating pressure: ≥18 inches Hg, abs

When the bypassing mode starts, water is injected into the condensers simultaneously.

The beginning of the bypassing mode is characterized by preset limit values of the reference value of the bypass lift controller. These limit values enable the injection water monitoring system to work.

Actuations

Starting Device of the Bypass System: Manual control "Lower-Raise" from the bypass control equipment rack.

The starting device of the bypass system serves the bypass stop valves to be opened or closed. Besides this, the closing pistons of the bypass control valves are positioned into the valve operating position resp. into the off position. Only when the closing pistons are in the operating position is the bypass controller enabled to control the bypass control valves.

During plant operations, each bypass valve can be tested independently and remotely.

The turbine bypass system has been designed in accordance with codes and standards as outlined in Table 3.2-1.

10.4.4.3 System Evaluation

The effects of turbine bypass system malfunctions on the reactor operation are bounded by events already presented in

Appendix 15A as follows:

1. A bypass system line failure is bounded by the pipe break outside containment accident. Refer to event 38 in subsection 15A.6.5.3.

2. A failure of the bypass system to open is bounded by the turbine trip and load rejection without bypass events. Refer to events 30 and 31 in subsection 15A.6.4.3.

3. An inadvertent opening of the bypass system, at worst, might cause a high steam line flow or low steam line pressure with a resultant MSIV closure trip. Refer to event 14 in subsection 15A.6.3.3.

The turbine bypass system is not essential for turbine operation. Should the bypass system malfunction and inadvertently admit bypass steam to the condenser while the turbine is under load, the

steam flow to the turbine would be reduced by action of the pressure controller. If, under these conditions, the condenser heat rejection rate is inadequate and the exhaust pressure becomes excessive, the turbine will be tripped by either the hydraulic or electric vacuum trips. In addition, should the turbine exhaust pressure continue to increase, additional redundant hydraulic and electrical vacuum trips are provided to trip the bypass stop and control valves and MSIVs.

The effects of a malfunction of the turbine bypass system valves and the effects of such failures on other systems and components are evaluated in Chapter 15, Accident Analysis. The steam bypass system is classified as a primary power generation system; that is, it is not a safety system.

10.4.4.4 Tests and Inspections

[HISTORICAL INFROMATION] [The opening and closing of the turbine bypass system valves was checked during initial startup and shutdown for performance and timing. The bypass steam line was hydrostatically tested to confirm leak tightness. Visual inspection of pipe weld joints confirmed the exterior condition of the weld.]

10.4.4.5 Instrumentation Application

The turbine bypass valves will close if the control system loses its electric power or hydraulic system pressure. The bypass valves are designed as combined stop and control valves. During testing under operation, the stop valves will be closed before the control valves undergo the tests, and vice versa. This prevents a bypass flow to the condenser which might result in a fluctuation in the turbine control system. The demand signal to the turbine bypass system from the turbine control System will correspond to the “error” between the turbine control valve opening required by the controlling pressure regulator and the turbine control valve position demanded by the output of the low valve gate and valve lift controller.

Upon turbine trip or generator load rejection, the start of the bypass valve flow will not be delayed more than 0.1 second after the start of the stop valve or the control valve closure. A minimum of eighty percent of the rated bypass capacity will be established within 0.3 seconds after the start of the stop valve or the control valve closure. For more detail refer to subsection 7.7.1.5, Pressure Control and Turbine-Generator System.

10.4.5 Circulating Water System

10.4.5.1 Power Generation Design Bases

a. The circulating water for cycle heat rejection from the main condenser is provided by a closed circulating water system using one natural-draft cooling tower and one multi-cell mechanical draft auxiliary cooling tower.

b. The cooling towers are designed to remove the design heat load from the circulating water for all weather conditions at or below the design wet bulb temperature.

10.4.5.2 System Description

The circulating water system consists of the main condenser, cooling towers, and circulating water pumps. It is designed to supply the main condenser with cooling water at temperatures ranging from 37 to 97 F when the mechanical draft auxiliary cooling tower is not in service. With the natural draft and auxiliary cooling towers both in service, the maximum cooling water temperature to the main condenser is expected to be less than 90 F. The circulating water system is shown in Figures 10.4-5 through 10.4-7. The characteristics of the system are given in Table 10.4-1.

The system is arranged with two 50-percent (approximately 290,000 gpm each) motor-driven, vertical circulating water pumps which take suction at the circulating water pumphouse forebay fed from two discharge lines from the cooling tower basin and discharge circulating water to the LP condenser shell. The circulating water pumps (N1N71C001A/B) require external sources of clean cool water for cooling the Kingsbury thrust bearing and for lube water to the two cutless rubber lower bearings. Thrust bearing cooling is by the Plant Chilled Water System with a backup from the discharge of the circulating water pumps. Lube water is from the Plant Service Water System with a backup from the discharge of the circulating water pumps. After passing through the LP, IP, and HP shells, the heated water is discharged from the two high-pressure condenser shell outlet water boxes. The two circulating water pipes to and from the circulating water pumps are 120 inch ID.

The natural-draft cooling tower is designed for a wet bulb temperature of 79 F. The design range and the design approach are 30.4 F and 18 F, respectively. The tower is approximately 404 feet in diameter at the base and 522 feet above the grade elevation.

The mechanical draft auxiliary cooling tower is designed for a wet bulb temperature of 80 F (which includes a 1 F allowance for potential recirculation effects). The design range and the design approach are 29 F and 8.9 F, respectively. The multi-cell tower is approximately 676 feet long, 114 feet wide and 53 feet above the grade elevation.

After passing over the cooling tower fill, the circulating water falls into the concrete basins at the bottom of the towers. From the basins, the water flows by gravity to the circulating water pumphouse located next to the turbine building.

During winter operation, the following startup procedure is recommended:

a. Open bypass valves in startup lines.

b. Once basin is warm and circulating water reaches 80 F, close the bypass valves in startup lines.

c. Increase heat load. Once full heat load is established, the bypass valves can be cycled to maintain circulating water temperature and assure satisfactory natural draft cooling tower operation.

d. During winter startup when the auxiliary cooling tower is in service, the auxiliary cooling tower fans may be shutdown or the auxiliary cooling tower may be isolated to maintain circulating water temperature and assure satisfactory system operation.

For startup when the natural-draft cooling tower is in service and the wet bulb temperature is less than 35 F, (or it is anticipated that it will drop below 35 F) the condenser inlet and outlet water temperatures should be monitored. If the condenser inlet water temperature is less than 60 F or if the condenser outlet water temperature is less than 90 F, the bypass valves should be cycled to maintain circulating water temperature. Similarly, if the auxiliary cooling tower is in service for startup, the auxiliary cooling tower fans may be individually shutdown followed by auxiliary cooling isolation to maintain circulating water temperatures. If the condenser inlet water temperature remains less than 60 F or if the condenser outlet water temperature remains less than 90 F following isolation of the auxiliary cooling tower, the bypass valves should be cycled to maintain circulating water temperature.

Opening the bypass valves diverts 100 percent flow to the natural draft cooling tower basin stopping the transfer of heat in the cooling tower.

When the natural draft cooling tower is in service under normal cold weather operation with freezing ambient wet bulb temperatures, the bypass valves are cycled, under manual control mode, to maintain the circulating water temperature to the condenser between 60 F and 75 F. Similarly, if the auxiliary cooling tower is in service under normal cold weather operation with freezing ambient wet bulb temperatures, the auxiliary cooling tower fans may be individually shutdown, under manual or automatic control mode, or the auxiliary cooling tower may be isolated, also under manual control mode, to maintain circulating water temperature between 60 F and 75 F.

A makeup water system is provided to replace the circulating water losses due to evaporation, blowdown, and drift. Makeup water for the circulating water system is taken from the plant service water system. Approximately 21,500 gpm of makeup is required.

A blowdown system is provided on the circulating water system. This is required since the evaporative process in the cooling towers tends to increase the dissolved solid content in the circulating water. Therefore, blowdown (monthly average approximately 11,200 gpm) is accomplished downstream of the circulating water pumps and controlled to maintain a preselected, dissolved solids concentration ratio. Blowdown is discharged to the discharge basin.

Two methods of circulating water system chemistry control are available to prevent biological fouling (e.g., accumulation of algae growth in the cooling towers and the main condenser). These methods are the addition of a non-oxidizing biocide or a hypochlorite solution. The choice of methods is dictated by inlet water conditions and economics.

Non-oxidizing biocide solution is added to the natural draft cooling tower basin and/or the auxiliary cooling tower hot water return lines based on microbiological analysis of the circulating water. The non-oxidizing biocide is added to achieve a concentration at or below the allowable NPDES (environmental) discharge limits to prevent the interruption of circulating water blowdown flow.

The circulating water blowdown flow is controlled to maintain a constant ratio between circulating water conductivity and makeup water conductivity. Periodic laboratory analyses of soluble calcium are made to verify the ratio used to control the desired number of cycles of concentration.

Hypochlorite solution may be used as another method of circulating water chemistry control. Discharge of free available chlorine to the river will be minimized by controlling the addition of hypochlorite solution so that the free available chlorine concentration in the cooling tower blowdown will not exceed NPDES Permit limits.

If used, Sodium Hypochlorite is to be shipped in from off-site. Injection frequency is determined by Plant Chemistry. The point of injection is to be the 120" hot water return lines to the natural draft cooling tower and when in service to the 96" hot water return lines to the auxiliary cooling tower. In this way, Sodium Hypochlorite is applied directly to the area of concern (cooling tower fill) first. Plant Chemistry evaluates and determines the optimum chlorine residual to be maintained. The point of control for chlorine residual is to be the bottom of the cooling tower fill. Circulating water system blowdown will be secured during Sodium Hypochlorite injection to prevent chlorine residuals in excess of NPDES limits from reaching the 001 outfall. Chlorine residuals are to be monitored after injection and Dechlorination used as necessary to meet NPDES limits.

A surfactant-based biodispersant may be used in conjunction with Sodium Hypochlorite at the discretion of Plant Chemistry. Any biodispersant considered for this application must have no net ionic charge so as not to interfere with any ionically charged scale dispersant used in CWS. If used, the biodispersant is to be added just prior to HYPO injection.

The circulating water blowdown flow is controlled to maintain a constant ratio between circulating water conductivity and makeup water conductivity. Periodic laboratory analysis of soluble calcium will be made to verify the ratio used to control the desired number of cycles of concentration.

Sulfuric acid is used to control pH to minimize long-term corrosion and formation of calcium deposits in the system. Acid treatment will be continuous and the injection point is at the natural draft cooling tower basin. The pH control system receives

a feed-forward signal from the circulating water makeup flow to adjust the acid flow rate for anticipated changes in pH. The pH measured at the HP condenser discharge is compared to the set point and if there is a difference, the control systems will adjust the acid flow rate to eliminate the error. A motor-operated valve is installed downstream of each acid metering pump in order to isolate acid injection from the circulating water system on low circulating water flow or on low cooling tower basin level. A relief valve in the discharge piping of each acid metering pump provides overpressure protection. When relieved, these valves will discharge acid back to the pump suction.

Sulfuric acid will be batch added at the natural draft cooling tower during continuous system maintenance or repair.

A dispersant and/or a surfactant are added to the circulating water system, as required, to prevent scaling and deposition of iron oxides and suspended solids in the condenser tubes. This addition supplements and augments the dispersant and surfactant which is being added through makeup from the Plant Service Water System. A mechanical Condenser Tube Cleaning System (CTCS) circulates cleaning balls through the condenser tubes. The CTCS provides for final cleaning of the condenser tubes to prevent scaling and deposition.

The above methods for the control of water chemistry and prevention of long-term corrosion and biological fouling have been reviewed for compatibility with system component and piping materials and found acceptable.

10.4.5.3 System Evaluation

The circulating water system is designed with cross-connected discharge piping from the circulating water pumps. The pumps are equipped with separate butterfly valves which permit either circulating water pump to be isolated. A 72 inch valved cross connection is provided on the discharge of the circulating water pumps downstream of the butterfly valves. Therefore, in case of a pump failure or a condenser tube leak, the circulating water system is capable of operating with one pump and one or two trains of condenser water boxes. Additionally, at the point where the hot water return lines branch off to the auxiliary cooling tower, there are two butterfly valves in the two 120" hot water return lines to the natural draft cooling tower and two butterfly valves in the two 96" hot water return lines to the auxiliary cooling tower. The butterfly valves in the hot water return lines to the auxiliary cooling tower allow the auxiliary cooling tower to be

isolated during cold weather operation or for maintenance. The butterfly valves in the hot water return lines to the natural draft cooling tower are maintained open during normal system operation, but can be manually closed to allow isolation of the natural draft cooling tower for maintenance when the circulating water system is shutdown. There is also a normally open 96" cross-connect valve at the 96" distribution header adjacent to the auxiliary cooling tower which was originally added to allow for future expansion of the auxiliary cooling tower.

The natural draft cooling tower is located at a minimum of one tower height away from the containment, auxiliary, and turbine building complex and any Category I structure. Since the cooling tower is smaller at the top, the tower would tend to collapse inwardly although collapse of the tower is highly improbable. Therefore, the potential for debris damaging any plant structure is very minimal. The cooling tower is made of noncombustible material.

The mechanical draft auxiliary cooling tower is only about 53 feet high and is about the same distance from Category I structures as the natural draft cooling tower; therefore, no damage to any plant structure would occur should the auxiliary cooling tower collapse. The auxiliary cooling tower contains multiple fans with their associated motors, couplings and gear boxes. The fans rotate at relatively slow speed and the fan blades are made of relatively low density material. A failure of a fan could result in the generation of missiles, however, due to the attributes discussed above and due to the location of the auxiliary cooling tower the damage would be confined to the auxiliary cooling tower itself; therefore, there would be no damage to important to safety equipment. The material used in the construction of the auxiliary cooling tower is of the type with a low flame spread rating.

The circulating water system is designed to prevent any injection of radioactive material into the circulating water and its subsequent release to the atmosphere through evaporation in the cooling towers. The circulating water passing through the condenser will always be at a higher pressure than the shell or condensing side; therefore, any leakage (such as from the condenser tube) will be from the circulating water into the shell side of the condenser.

The circulating water system piping inside the turbine building, contains expansion joints which are enclosed inside metal leakage barriers equipped with drains. In the event of excessive leakage from any of the expansion joints, a high water level alarm inside the leakage barrier will be sounded inside the control room to alert the operator that an expansion joint is failing.

The circulating water system serves no safety function. Systems analysis has shown that failure of the circulating water system will not compromise any safety-related systems or prevent safe shutdown. The circulating water system was modified to meet EPU conditions. To increase cooling capacity to meet EPU, eight new tower cells were added to the mechanical draft auxiliary cooling tower (Ref. 1). The circulating water pumps were modified to increase the circulating water system flow rate to reduce condenser pressure and condensate temperature while increasing plant output during EPU conditions (Ref. 2). The EPU analysis determined that the circulating water system will not compromise any safety-related systems or prevent safe shutdown during EPU conditions.

The circulating water system has been evaluated for the potential flooding of safety-related equipment due to the failure of a system component. The results are as follows:

a. A total of approximately 13,500,000 gallons of water is contained in the Unit 1 circulating water system. The normal flow from the two circulating water pumps will be 580,000 gallons per minute at an operating head of 98 feet; maximum flow could increase to approximately 694,000 gpm at pump run out.

b. The two 120-inch ID circulating water pipes enter the turbine building below the turbine building base slab. The pipes extend vertically from the base slab at El. 87-0. The pipes are connected to the condenser inlet waterboxes by expansion joints. The piping arrangement on the discharge side of the condenser is similar to that on the inlet side with the exception that a motor-operated butterfly valve is provided on each discharge line downstream of the expansion joint. Furthermore, the two discharge lines are routed horizontally through the turbine building wall at El. 117-6.

The normal operating discharge pressure from the two circulating water pumps is approximately 42.6 psig and the maximum shutoff pressure is approximately 66.1 psig. The circulating water piping, valves, expansion joints, and condenser water boxes are designed at 90 psig. This pressure is well above the operating pressure of the circulating water system.

There are two potential sources of failure in the circulating water system: a) failure of the butterfly valves, and b) failure of the expansion joints. A failure of the circulating water system inside the turbine building would result in flooding inside the condenser room because the flow cannot be handled by the four liquid radwaste sumps located at the condenser room. Each sump is equipped with level alarms which will provide indication in the control room that a gross failure inside the condenser room has taken place.

c. The butterfly valves, two at the condenser outlet, two at the circulating water pump discharge, and one for the cross connection between the two circulating water pipes, are equipped with motor operators and require approximately 60 seconds to move from the full-open to the full-closed position. Their normal operating position is full open, except the butterfly valve for the pump cross connection, which is normally closed. Their position is not normally changed during operation.

   The butterfly valves associated with the auxiliary cooling tower, two in the 96" hot water return lines to the auxiliary cooling tower, and one for the 96" cross connection at the auxiliary cooling tower, are equipped with motor operators and require approximately 3 to 5 minutes to move from the open to the full-closed position. The two butterfly valves in the 120" hot water return lines to the natural draft cooling tower are normally full open and therefore their positions are not changed during operation. The two butterfly valves in the 96" hot water return lines to the auxiliary cooling tower, may either be throttled or full open when the auxiliary cooling tower is in service or closed when the auxiliary cooling tower is out of service. The butterfly valves in the 96" hot water return lines to the auxiliary cooling tower and the 96"

cross connection are occasionally repositioned during operation whenever the auxiliary cooling tower is taken out of service or placed in service.

Although sudden closure of one of these valves, due to malfunction, can be postulated with higher-than-normal pressure resulting in a portion of the system, this is considered to be very unlikely because a gross failure of the valve disc shaft or the motor drive gear train would have to occur to permit closure of the valve.

The circulating water pumps are interlocked with their respective pump discharge butterfly valves which are operated by remote manual switches in the control room. Upon receiving a high-level alarm from the liquid radwaste sumps, the operator can initiate the closure of the valve and stopping of the pump manually. It can be conservatively estimated that approximately 5 minutes (assumed a 4-minute operator reaction time) will be required from the moment the failure occurs to completely stop the circulating water system flow.

d. Should a gross failure occur in the circulating water system inside the turbine building which could not be handled by the liquid radwaste sumps (a total capacity of 7,850 gpm), water would accumulate in the condenser room. In the case of one expansion joint or a butterfly valve failure, the resulting water level will be approximately at El. 93-8-1/8 with the following plant areas affected: Unit 1 turbine building, the existing but canceled Unit 2 turbine building, radwaste buildings, control building, and the Unit 1 radwaste pipe tunnel. To attain the estimated flood level, approximately 2.3×10^6 gallons of the total 13.5×10^6 gallons was assumed to be dumped into the condenser room and the security wall between the Unit 1 turbine building and the canceled Unit 2 turbine building was assumed not to be installed or fails.

e. Figure 1.2-2 shows a plan view of the turbine building at El. 93-0 and 100-9. There is no safety-related equipment located in the vicinity of the condenser room and at elevations below 116 feet, except for one secondary containment isolation valve, Q1-P44-F116. The failure of this valve will not adversely affect attaining and maintaining a cold safe shutdown. It was determined that

the affects of flooding, if any, would only cause the valve to fail in a safe position. Therefore, in the unlikely event of a failure of the circulating water system resulting in flooding inside the turbine building, it will not affect any components or systems that are essential to the safety of the plant.

f. The control building is interconnected with the turbine building at El. 93'-0". Therefore, it has been assumed that water will flow into the control building. In addition, the Unit 1 radwaste pipe tunnel will be flooded. The radwaste building and the canceled Unit 2 turbine building are also flooded up to El. 93'-8-1/8" (assuming the circulating water system fails and the security wall separating the Unit 1 turbine building and the canceled Unit 2 turbine building is assumed not to be installed or fails).

g. If it were assumed that the circulating water system failed to secure, a total water inventory of 13.5×10^6 gallons could be discharged into the condenser room.

   The Unit 1 turbine building and the existing but canceled Unit 2 turbine building are separated by a security wall and interconnected at El. 93'-0". Since the doorways and openings in the security wall are not leak tight, the existing but canceled Unit 2 turbine building, the Unit 1 turbine building, radwaste building, radwaste pipe tunnels, and the control building will be the only flooded areas. The resulting flood water elevation is 104'.

   All safety-related equipment in the control building that is essential in attaining and maintaining a cold safe shutdown is located above El. 111'-0".

h. The auxiliary building is watertight up to El. 114' to prevent entry of water into the building due to a postulated circulating water system failure. Therefore, even in the extremely unlikely event of failure to shut off the circulating water delivery system in case of a butterfly valve failure or an expansion joint rupture, the resulting water level will not functionally degrade any equipment essential to attaining and maintaining a cold safe shutdown.

10.4.5.4 Tests and Inspections

All active components of the system (except the main condensers) are accessible for inspection during station operation.

Performance, hydrostatic, and leakage tests are conducted on the circulating water system butterfly valves in accordance with AWWA C-504. These will be manufacturing tests only and no routine or continuous testing will be undertaken.

10.4.5.5 Instrumentation Application

The circulating water pumps are individually equipped with isolation valves which permit any pump to be isolated. The isolation valves also serve to prevent vapor binding of the pumps when starting up after isolation. These isolation valves are operated by remote manual switches in the control room.

The two trains of condenser shell water boxes and the cross-connection between the water boxes are equipped with isolation valves which enable either half of the water boxes to be isolated. These isolation valves are operated by remote manual switches in the control room.

At the point where the hot water return lines branch off to the auxiliary cooling tower, there are two butterfly valves in the two 120" hot water return lines to the natural draft cooling tower and two butterfly valves in the two 96" hot water return lines to the auxiliary cooling tower. The butterfly valves in the hot water return lines to the auxiliary cooling tower allow the auxiliary cooling tower to be isolated during cold weather operation or for maintenance. Although open during normal system operation, the butterfly valves in the hot water return lines to the natural draft cooling tower allow isolation of the natural draft cooling tower for maintenance when the circulating water system is shutdown. There is also a normally open 96" cross-connect valve at the 96" distribution header adjacent to the auxiliary cooling tower which was originally added to allow for future expansion of the auxiliary cooling tower. These isolation valves are operated by remote manual switches in the auxiliary cooling tower power and control building. The butterfly valves in the 120" hot water return lines to the natural draft cooling tower are manually operated (electrical components abandoned in place) and are administratively controlled in the open position during circulating water system operation to prevent exceeding flow limitations through the auxiliary cooling tower piping.

Temperature and pressure are measured on each condenser. The water level is automatically maintained in the natural draft cooling tower basin. Necessary level alarms and flow measurements are provided. The cooling tower blowdown system will be operated proportional to the circulating flow.

The auxiliary cooling tower is provided with instrumentation to measure combined flow to both cooling towers, flow to the auxiliary cooling tower, hot water temperature to the auxiliary cooling tower, and combined cold water temperature return from the natural draft cooling tower basin to the condensers. The auxiliary cooling tower fan motors are provided with instrumentation to monitor winding and bearing temperatures, vibration, and watts. The auxiliary cooling tower fan gear boxes are provided with instrumentation to monitor oil level and vibration. The status of the fan motors, water temperature, and flow rate are monitored by a digital control system. The operation of the auxiliary cooling tower, i.e., fan and valve operation, can be controlled manually or automatically by a digital control system.

10.4.6 Condensate Cleanup System

10.4.6.1 Power Generation Design Bases

a. The objective of the condensate cleanup system is to maintain the required purity of feedwater flowing to the reactor with a maximum capacity of 27,600 gpm, at a maximum temperature of 150 F, and design pressure of 350 psig.

b. The condensate cleanup system is designed based upon the following influent concentrations (startup and normal operation - no condenser leaks):

Impurity	Concentration Startup (ppb)	Concentration Normal operation (No condenser leaks) (ppb)
Iron (Fe)		
Soluble	40	5
Insoluble	1000*	25
Copper (as Cu)		

(soluble plus insoluble)	50	7
Other metals (as the metal soluble plus insoluble)	40	3
Impurity		Concentration
Conductivity µmho/cm at 25 C	0.5	0.2
pH at 25 C	6 to 8	6.5 to 7.5
Chloride (as C1) Normal	10	10

*This might be as much as 4000 ppb for several hours at initial plant startup.

c. During normal operation, based upon the above in fluent concentrations, the system shall remove dissolved and suspended solids from the feedwater to maintain a high effluent water quality of:

Specific conductivity at 25 C (µmho/cm)	≤0.1
Metallic impurities (ppb)	≤15 of which copper shall not exceed 2 ppb
Silica as SiO_2 (ppb)	≤5
Chlorides as C1 (ppb)	<10

d. A minimum average ion exchange capacity of 25 percent of theoretical shall be maintained at all times during normal operation to maintain ample margin for a major condenser tube leak.

e. The system will provide final polishing of the makeup water entering the feedwater loop.

f. The system will maintain the high purity water rejected to the condensate storage and transfer system.

g. The limits for the conductivity of the purified condensate have been established in accordance with the guidance provided in Table 2 of Regulatory Guide 1.56, Revision 1 (July 1978). Corrective actions to be taken if the limits are exceeded are presented in approved station off-normal event procedures.

10.4.6.2 System Description

The condensate cleanup demineralizer system is shown in Figures 10.4-9a through 10.4-9g. The system is sized to limit the condensate impurity concentration during plant operation and in periods of peak contamination. The condensate cleanup system consists of three precoat filters (precoat filter "B" abandoned in place) and eight parallel-operating deep bed demineralizers. At startup, the condensate full flow filtration (CFFF) system removes suspended solids (iron) to < 0.5 ppb by the use of pleated filter elements. This is described in section 10.4.7.2.2. The system is sized to filter 100% startup and maximum condenser effluent flows. As an alternate, two filters of the condensate precoat filter set can filter up to 33 percent, i.e., 11,000 gpm, of the normal feedwater flow. During normal operation, the precoat filter function in conjunction with the suppression pool cleanup system and as a part of the feedwater system. For details, refer to subsection 9.3.6.

Normally, demineralizers are in operation processing 100 percent of the normal condensate flow. The system includes the associated piping, precoat filters, ultrasonic resin cleaner, the Advanced Resin Cleaning subsystem and all necessary valves, instrumentation and controls required to provide proper operation and protection against malfunction. Instrumentation includes an automatic flow-balancing control which maintains equal flow (maximum 4600 gpm) through each on-stream unit. The system is controlled from local panels. The valves and pumps are remotely operated. An automatic bypass maintains the condensate system flow in the event a high-pressure differential occurs across the condensate cleanup system. The principal code applied to the piping and components of this system is ANSI B31.1.

The initial total capacity of the new anion and cation demineralizer resins used in the condensate demineralizers shall be determined in accordance with approved plant procedures. These procedures describe the methods to obtain and analyze the sample, and are based on requirements presented in Regulatory Guide 1.56

(Rev. 1) (July 1978). Condensate System resins are not regenerated at GGNS, thus periodic verification of remaining resin capacity is not required.

10.4.6.3 System Evaluation

The condensate system provides no safety function. The system analysis has shown that a failure of the system will not compromise any safety-related systems or prevent safe shutdown.

The condensate cleanup system removes some radioactive material created by corrosion, fission products, and carryover from the reactor. While radioactive effects from these sources do not affect the capacity of the resin, the concentration of such radioactive material requires shielding (see subsections 12.1.2 and 12.3.2). Waste sludge and vent gases from the condensate cleanup system will be sent automatically to the radwaste system for cleanup and/or disposal. The addition of new resin will be done manually. Chapter 11.0 describes the activity level and removal of radioactive material from the system.

All condensate cleanup piping is located within the nonsafety-related turbine building. Therefore, the effects of postulated piping failures are not analyzed.

10.4.6.4 Tests and Inspections

The condensate cleanup system will be proved operable by its use during normal plant operation. Each vessel of the system can be separately isolated for testing to ensure operability and integrity of the system.

Condensate demineralizer resins are purchased to technical specifications which are commensurate to their intended application. Certification of the resins' quality is ensured by the resin vendor sampling and analyzing each batch of resin prior to shipment on site. Certified test results are furnished upon shipment for each batch of condensate demineralizer resin.

In accordance with Regulatory Guide 1.56, resin depletion is calculated by plant personnel by use of a database or a computer program that tracks total resin depletion (Inputs include condensate demineralizer flow, condensate demineralizer inlet and outlet conductivity, and resin capacity). This allows plant personnel to evaluate condensate demineralizer performance and recommend resin replacement, if needed.

If needed, the accuracy of calculated resin capacity may be checked by measurements made on condensate cleanup demineralizer resin samples taken when the demineralizer units are removed from service for cleaning or replacement.

10.4.6.5 Instrumentation Application

Instrumentation includes an automatic flow balancing control for each demineralizer which will maintain equal flow through each unit by regulating a valve downstream of the unit. Samples will be taken downstream of each demineralizer and are routed through the turbine building sample conditioning and analyzing panel. A conductivity analyzer with high conductivity alarms will indicate resin exhaustion. System influent and effluent also will be monitored and the influent conductivity element shall provide indication of condenser leakage. The control room alarm set points of the conductivity meters at the inlet and outlet of the condensate cleanup demineralizers are a maximum of 0.5 µmho/cm and 0.1 µmho/cm, respectively. High conductivity of system effluent is alarmed as a printout on the plant process computer. An automatic bypass maintains the condensate system flow in the event the number of demineralizers in operation is inadequate to handle the required flow. A bypass valve will open upon detection of high differential pressure across the system and this condition is annunciated in the control room.

Three conductivity recorders are provided for the system. One is a multipoint recorder receiving inputs from the effluent conductivity element and each separate element downstream of each demineralizer. Two other recorders are located in the control room to record the conductivity of the system influent and effluent.

Conductivity meters for the condensate cleanup system will be electronically calibrated in accordance with approved plant Maintenance Calibration Instructions (MCI). Periodically, a correlation will be performed on the combined deep-bed influent and effluent to compare the installed process conductivity monitors with an independent in-line flow cell under controlled conditions. The correlation will be performed in accordance with approved plant procedures. Conductivity monitors are checked for accuracy on a monthly basis.

The precoat filter is provided with a pushbutton for automatic operation to start the backwashing and precoating cycle. Appropriate instruments are provided to operate the valves remotely from the control panel. A flow balancing system is provided to maintain equal flow through each precoat filter. A flow element, flow transmitter, square root extractor, and flow indicator are provided for monitoring outlet flow from each precoat filter.

Condensate demineralizer resin will be periodically cleaned or replaced, as necessary, to maintain system performance and Condensate System water purity requirements.

A 25 percent theoretical exchange capacity will be maintained.

The operator, by remote manual control, can move the resin bed from the cation regeneration/separation vessel to the URC area for ultrasonic cleaning, or by local controls, the operator can process the resin bed through the Advanced Resin Cleaning subsystem.

Once the resin bed is cleaned, it is then moved by remote manual control or local manual controls, respectively, into the resin mix and storage tank for standby service.

When used, the URC operation is remote manual only. A "group retransmit" annunciator contact is generated for each of the following:

a. Precoat filter system trouble

b. Condensate demineralizer system trouble

c. Ultrasonic resin cleaner system trouble

d. CFFF system trouble

Each of these contacts operates an annunciator point in the control room identifying the group and alerts the computer of an alarm condition.

Other instrumentation includes the suitable differential pressure monitors, pressure indicators, and local alarms for each unit.

The Advance Resin Cleaning Subsystem (ARCS) may be used to clean condensate demineralizer resins in lieu of the URC. The ARCS is operated from a local control panel. The operation of the Resin Mix & Storage Tank and the Resin Separation & Cation Regeneration

Tank vent valves and drains is switched to the local control panel from the Radwaste Control Room. The resins are transferred from the Resin Separation & Cation Regeneration Tank and processed through the ARCS screen assembly. The clean resins are returned to the Resin Mix & Storage Tank. The ARCS waste water may be routed through a filter assembly and then to the Condensate Clean Waste Tank. Local pressure and flow indication is provided on the ARCS skids, and a local common trouble alarm is provided on the ARCS control panel.

10.4.7 Condensate and Feedwater System

10.4.7.1 Power Generation Design Bases

The objective of the condensate and feedwater system is to provide a dependable supply of feedwater to the reactor, to provide feedwater heating, and to maintain high water quality in the feedwater. The system is designed to provide the required flow at the required pressure to the reactor, allowing sufficient margin to provide continued flow under anticipated transient conditions.

a. Performance Requirements

The system is designed:

1. To provide feedwater at a minimum pressure of 1114 psia from the reactor feed pumps. It is sized with sufficient capacity to provide 115.5 percent of the feedwater flow at unit rating.

2. To provide the required temperature of feedwater to the reactor with six stages of closed feedwater heating. The final feedwater design temperature is nominally 419.5˚F at unit rating.

3. To provide 80 percent of rated feedwater flow in the event of the loss of one reactor feed pump.

4. To provide 100 percent of rated feedwater flow in the event of the loss of one condensate pump or one condensate booster pump.

5. To provide 100 percent of rated feedwater flow in the event of the loss of one heater drain pump, with 50 percent of heater drain tank flow bypassing to the main condenser.

b. Feedwater Quality

Pumped-forward heater drains are deaerated sufficiently in the heater drain tank to maintain a level of 200 ppb or less oxygen content in the final feedwater supplied to the reactor during normal full-load operation.

To minimize the corrosion product input to the reactor, a startup recirculation line is provided from the reactor feedwater supply lines, downstream of the high pressure feedwater heaters, to the main condenser.

10.4.7.2 System Description

The condensate and feedwater system consists of the piping, valves, pumps, heat exchangers, controls, instrumentation, and the associated equipment and subsystems which supply the reactor with heated feedwater in a closed steam cycle utilizing regenerative feedwater heating. The system described in this subsection extends from the main condenser to the second valve outside of containment. The remainder of the system, extending to the reactor, is described in subsection 5.4.9, Main Steam Line and Feedwater Piping.

The main portion of the feedwater flow is condensate pumped from the main condenser. The remaining portion, which comes from the moisture separator drains, steam reheater drains, and drains from the fifth and sixth stage feedwater heaters, is pumped forward from the fifth stage of heating into the feedwater stream. Turbine extraction steam is utilized for a total of six stages of closed feedwater heating, with the drains from the No. 4 and 3 stages of feedwater heaters being cascaded to the No. 2 stage feedwater heaters. Stages No. 1 and 2 of the feedwater heaters drain independently to the main condenser.

The condensate pumps take the deaerated condensate from the intermediate-pressure condenser shell hotwell and deliver it through condensate full flow filtration system and then to the condensate demineralizers. Condensate then flows to the condensate booster pumps which discharge successively through the first, second, third, and fourth stage low-pressure feedwater heaters to the reactor feed pumps (see Figures 10.4-10, 10.4-11 and 10.4-13).

The remainder of the feedwater flow is provided by the drains which are pumped forward and injected into the feedwater stream at a point between the fourth-stage low-pressure feedwater heaters and the suction side of the reactor feed pumps. These drains originate as follows (see Figures 10.4-10 to 10.4-12): The shell drains from the sixth stage high-pressure feedwater heaters (mainly consisting of the drains from the second stage steam reheaters, and the sixth stage extraction steam condensate), the shell drains from the fifth stage high-pressure feedwater heaters (mainly consisting of the cold reheat extraction steam condensate, and the condensed flashes from the heater drain tank) are directed to the heater drain tank. The drains from the moisture separators and from the first stage steam reheaters are also directed to the heater drain tank. The drains are deaerated sufficiently in the heater drain tank to maintain a level of 200 ppb or less oxygen content in the final feedwater supplied to the reactor during normal full-load operation. The heater drain pumps take suction from the heater drain tank and inject the deaerated drains into the feedwater stream at the suction side of the reactor feed pumps.

The reactor feed pumps then discharge the total feedwater flow through the fifth and sixth stage high-pressure feedwater heaters to the reactor (see Figure 10.4-13).

A startup recirculation line is provided from the reactor feedwater supply lines, at a point downstream of the high-pressure feedwater heaters, to the main condenser. This line is used to minimize the corrosion product input to the reactor during startup. This is accomplished by allowing the system feedwater to recirculate through the condensate cleanup system for cleanup prior to circulating it to the reactor during startup.

The conductivity of the condensate is continuously monitored to provide indications of dissolved solids. The feedwater is continuously monitored for suspended solids in order to ensure feedwater quality commensurate to that of the reactor coolant.

The feedwater heater drain system is designed to allow bypassing of the pumped forward drains in order to route all drains to the main condenser during startup and shutdown to improve feedwater quality.

A condensate drain tank is provided to collect reactor feed pump seal leakoffs and discharges from the condensate and feedwater thermal expansion relief valves and various drains in the system. These are finally drained to the main condenser.

10.4.7.2.1 Condensate Pumps

Three one-third capacity condensate pumps operate in parallel. Each is a motor-driven, vertical, canned suction, multistage centrifugal unit installed at an elevation that allows operation at low condensate level in the main condenser hotwell. The condensate pumps provide the necessary suction head at the condensate booster pumps.

Isolation valves are provided which allow each condensate pump to be individually removed from service while maintaining system operability with the remaining condensate pumps.

Controlled condensate recirculation is provided downstream of the demineralizers. This ensures that the minimum safe flow through the condensate pumps is maintained during operation and it allows cleanup of the system prior to operation.

10.4.7.2.2 Condensate Full Flow filter

The Condensate Full Flow Filter (CFFF) consists of four parallel vessels containing pleated filters. The filters are designed to remove suspended solids (iron) to < 0.5 ppb. The CFFF is designed to operate with one vessel out of service for backwashing without a bypass (three vessels can filter 100% condenser effluent). The CFFF includes a Backwash Air Accumulator and air to air booster provided for the motivating force for backwashing individual vessels.

There is also a CFFF backwash discharge line. This line discharges the buildup of particulate on the filter elements to the condensate clean waste tank (CCWT) which acts as a surge tank. From the CCWT the CFFF backwash is pumped to the radioactive waste treatment system for processing. The CFFF vessels are located in parallel to the condensate prefilters.

A programmable logic controller (PLC) is used to automatically sequence the backwash operation. Backwashing is started manually then controlled by the PLC. Isolation valves are provided for each vessel, the backwash air storage tank and the backwash lines.

The CFFF vessels are in operation during startup and all modes of operation when the condensate system is operating. It filters 100% of the condenser effluent.

10.4.7.2.3 Feedwater Heaters

The first, second, third, and fourth stage low-pressure feedwater heaters are identically arranged in three parallel strings and are located in the necks of the three shells of the main condenser. The two remaining stages of feedwater heating are identically arranged in two parallel strings with each string having a fifth and sixth stage high-pressure feedwater heater.

Drain cooling is provided at all stages of feedwater heating except the fifth, where the drains are pumped forward, and the first. Drain cooling sections are integral with the feedwater heaters.

Each feedwater heater is a horizontal, closed type, installed at an elevation that allows proper shell drainage at all loads. Each feedwater heater utilizes U-tube construction. Tubes are made of stainless steel.

Isolation valves are provided which allow each feedwater heater string to be removed from service. System operability is maintained with the remaining feedwater heaters.

The startup and operating vents from the steam side of the feedwater heaters are piped directly to the main condenser. Discharges from shell relief valves on the steam side of the feedwater heaters are piped directly to the main condenser.

10.4.7.2.4 Heater Drain Tank

A single heater drain tank is utilized to receive drains directly from the shells of the fifth and sixth stage feedwater heaters, the moisture separator drain tanks, the moisture separator shell drain tanks, and the first stage steam reheater drain tanks. The heater drain tank provides deaeration to limit the oxygen content in the pumped-forward drain flow and provides reservoir capacity for drain pumping. The heater drain tank is installed at an elevation beneath the fifth stage feedwater heaters (pressure source) that allows these heaters to drain freely by gravity flow.

The heater drain tank is provided with an alternate drain line to the main condenser for automatic dumping upon high level. The alternate drain line is also used during startup and shutdown when it is desirable to bypass the drain pumping for feedwater quality purposes.

10.4.7.2.5 Heater Drain Pumps

Two one-half capacity heater drain pumps operate in parallel, taking suction from the heater drain tank and discharging to the feedwater stream on the suction side of the reactor feed pumps. Each is a motor-driven, vertical, multistage centrifugal type located below the heater drain tank and designed for the available suction conditions.

The piping arrangement allows each heater drain pump to be individually removed from service while maintaining system operability with the remaining drain pump.

Controlled drain recirculation is provided from the discharge side of each heater drain pump to the heater drain tank. This ensures that the minimum safe flow through each heater drain pump is maintained during operation.

10.4.7.2.6 Condensate Booster Pumps

Three one-third capacity condensate booster pumps operate in parallel taking suction downstream of the condensate demineralizers and discharging through the four stages of low-pressure feedwater heaters. Each is a motor-driven, horizontal, single-stage centrifugal type. The condensate booster pumps provide the necessary suction head at the reactor feed pumps.

Isolation valves are provided which allow each condensate booster pump to be individually removed from service while maintaining system operability with the remaining condensate booster pumps.

Controlled condensate recirculation is provided downstream of the condensate booster pumps to the main condenser. This ensures that the minimum safe flow through the condensate booster pumps is maintained during operation.

10.4.7.2.7 Reactor Feed Pumps

Two one-half capacity reactor feed pumps operate in parallel, acting in series with the condensate pumps and condensate booster pumps. The reactor feed pumps take suction from the fourth stage low-pressure feedwater heaters and discharge through the fifth and sixth stage high-pressure feedwater heaters to provide the pressure head required by the reactor. Each pump is a turbine-driven, horizontal, single-stage centrifugal unit.

Isolation valves are provided which allow each reactor feed pump to be individually removed from service while maintaining system operability with the remaining reactor feed pump.

Controlled feedwater recirculation is provided from the discharge side of each reactor feed pump to the main condenser. This ensures that the minimum safe flow through each reactor feed pump is maintained during operation.

10.4.7.2.8 Reactor Feed Pump Turbine Drives

Each of the two one-half capacity reactor feed pumps is driven by an individual steam turbine. The turbine drives are the dual-admission type, and each is equipped with two sets of main stop and control valves. One set of valves regulates low-pressure steam flow extracted from the moisture separator reheater shell (hot reheat steam), and the other set regulates high-pressure steam flow from the main steam supply. During normal operation, the turbine drives run on the low-pressure hot reheat steam. Main steam is used during plant startup, low load, or transient conditions when hot reheat steam is either not available or is of insufficient pressure. The turbine drives exhaust to the main condenser.

Isolation valves are provided which allow each turbine drive to be individually removed from service while maintaining system operability with the remaining turbine-driven reactor feed pump.

Each turbine drive is rated at 18,107 hp at 5673 rpm with inlet conditions of low-pressure steam at 70 psia, high-pressure steam at 916.1 psia, and back pressure of 3.5 psia.

10.4.7.2.9 Zinc Injection Passivation Subsystem

The Zinc Injection Passivation System is a subsystem of the Condensate and Feedwater System. The Zinc Injection System is designed to continuously inject a dilute solution of ionic zinc in water into the reactor feedwater. The injected zinc ions reduce the corrosion of stainless steel surfaces in the primary system, which will lower the radiation levels due to cobalt-60 deposition.

The system is non-safety related and non-seismic and consists of isolation valves, dissolution vessel with a supply of depleted zinc oxide, flow control valves and local flow, temperature and differential pressure instrumentation. All instrumentation is mounted locally.

A stream of water taken from the feedwater pump discharge is routed through a column containing depleted zinc oxide (DZO) pellets. The dissolution of sintered DZO pellets into the diverted feedwater stream provides the ionic zinc. The dissolved DZO in the stream leaving the dissolution column is returned to the feedwater pump suction and is blended with the main feedwater flow.

The reactor water zinc concentration is periodically measured using normal plant chemistry sampling procedures. The amount of zinc leaving the dissolution column and entering the feedwater stream (the injection rate) can be adjusted to maintain the zinc concentration in the reactor water at the desired level. Zinc concentration is maintained by controlling flow through the zinc dissolution vessel via a manually operated flow control valve.

The dissolution vessel is an ASME Section VIII pressure vessel and is designed with overpressure protection for the vessel.

An air operated valve (AOV) is installed upstream of the skid to provide automatic isolation of the zinc injection system and to maintain the feedwater piping pressure boundary with feedwater depressurization during a DBA LOP/LOCA.

10.4.7.3 System Evaluation

The condensate and feedwater system serves no safety function. Systems analysis has shown that failure of this system will not compromise any safety-related systems or prevent safe shutdown.

During operation, radioactive steam and condensate are present in the feedwater heating portion of the system, which includes the extraction steam piping, feedwater heater shells, heater drain piping, and heater vent piping. Shielding and controlled access are provided as necessary (see Section 12.3). The condensate and feedwater system is designed to minimize leakage with welded construction utilized where practicable. Relief discharges and operating vents are handled through closed systems.

The condensate and feedwater system is not required to effect or support the safe shutdown of the reactor or perform in the operation of reactor safety features.

If it is necessary to remove a component such as a feedwater heater, pump, or control valve from service, continued operation of the system is possible by use of the multistring arrangement and the provisions for isolating and bypassing equipment and sections of the system.

An abnormal operational transient analysis of a loss of a feedwater heater is included in subsection 15.1.1.

All condensate and feedwater piping considered in this section is located within the nonsafety related turbine building. Therefore, the effects of postulated piping failures are not analyzed.

10.4.7.4 Tests and Inspections

[HISTORICAL INFORMATION] [Each feedwater heater, heater drain tank, pump, and valve has received a shop hydrostatic test which has been performed in accordance with applicable codes. All tube joints of feedwater heaters have been shop leak tested. Prior to initial operation, the completed condensate and feedwater system is to receive a field hydrostatic test and inspection in accordance with the applicable code.] Periodic tests and inspections of the system are to be performed in conjunction with scheduled maintenance outages.

10.4.7.5 Instrumentation Application

Feedwater flow-control instrumentation measures the feedwater flow rate from the condensate and feedwater system. This measurement is used by the feedwater control system which regulates the feedwater flow to the reactor to meet system demands. The feedwater control system is described in subsections 7.7.1.4 and 7.7.2.4.

Instrumentation and controls are provided to regulate the pump recirculation flow rate for the condensate, condensate booster, and reactor feed pumps.

Measurements of pump suction and discharge pressures are provided for all pumps in the system.

Sampling means are provided to monitor the quality of the final feedwater, as described in subsection 9.3.2.

In the feedwater heating portion of the system, temperature measurements are provided for each stage of heating. These measurements include the temperature into and out of each feedwater heater for both the water and steam sides of the system. Steam pressure measurements are provided at each feedwater heater.

The CFFF system is controlled by a Programmable Logic Controller (PLC). The backwashing cycle of any vessel is initiated manually and sequenced automatically by the PLC. There is a general trouble alarm in the Radwaste Control Room.

Instrumentation and controls are provided to regulate heater drain flow rate to maintain the proper condensate level in each feedwater heater shell (except for feedwater heaters No. 1 and 5) and the heater drain tank. High-level alarm and automatic dump action on high level are also provided. Heater No. 5 drains to the heater drain tank by gravity and heater No. 1 utilizes a loop seal for drainage control.

10.4.8 Deleted

10.4.9 References

1. Safety Analysis Report for Grand Gulf Nuclear Station Constant Pressure Power Uprate (commonly known as PUSAR), NEDC-33477P, August 2010.

2. Shaw Calculation 134948-M-0001-01, GGNS EPU Heat Balance R1 (Entergy Calculation MC-N1111-09001).

TABLE 10.4-1:

CIRCULATING WATER SYSTEM COMPONENTS

Circulating Water Pumps

Number	2
Type	Vertical, motor-driven
Capacity each, gpm	290,000
Head, ft	98

Cooling Towers

Number	1
Design wet bulb temperature, F	79
Design range, F	29
Design approach, F	18
Relative humidity,%	60
Dimensions, ft	404 x 522

Mechanical Draft

Number	1
Design wet bulb temperature, F	80
Design range, F	29
Design approach, F	9
Relative humidity,%	60
Dimensions, ft	676 L x 114 W x 53 H
Number of cells	28
Type	Induced draft
Fan motor size, hp	200
Circulating flow, gpm	600,000
*Makeup flow, gpm	21,500
*Blowdown, gpm	11,200

TABLE 10.4-1:

CIRCULATING WATER SYSTEM COMPONENTS (Continued)

Condenser Water Box Drainage and Recirculation Pumps

Number	2
Type	Centrifugal, horizontal, motor-driven
Capacity each, gpm	24,000
Head, ft	60

Lube Water Pumps

Number	3
Type	Horizontal
Capacity each, gpm	34
Head, ft	200

*Average yearly operating condition based on 80% capacity factor.

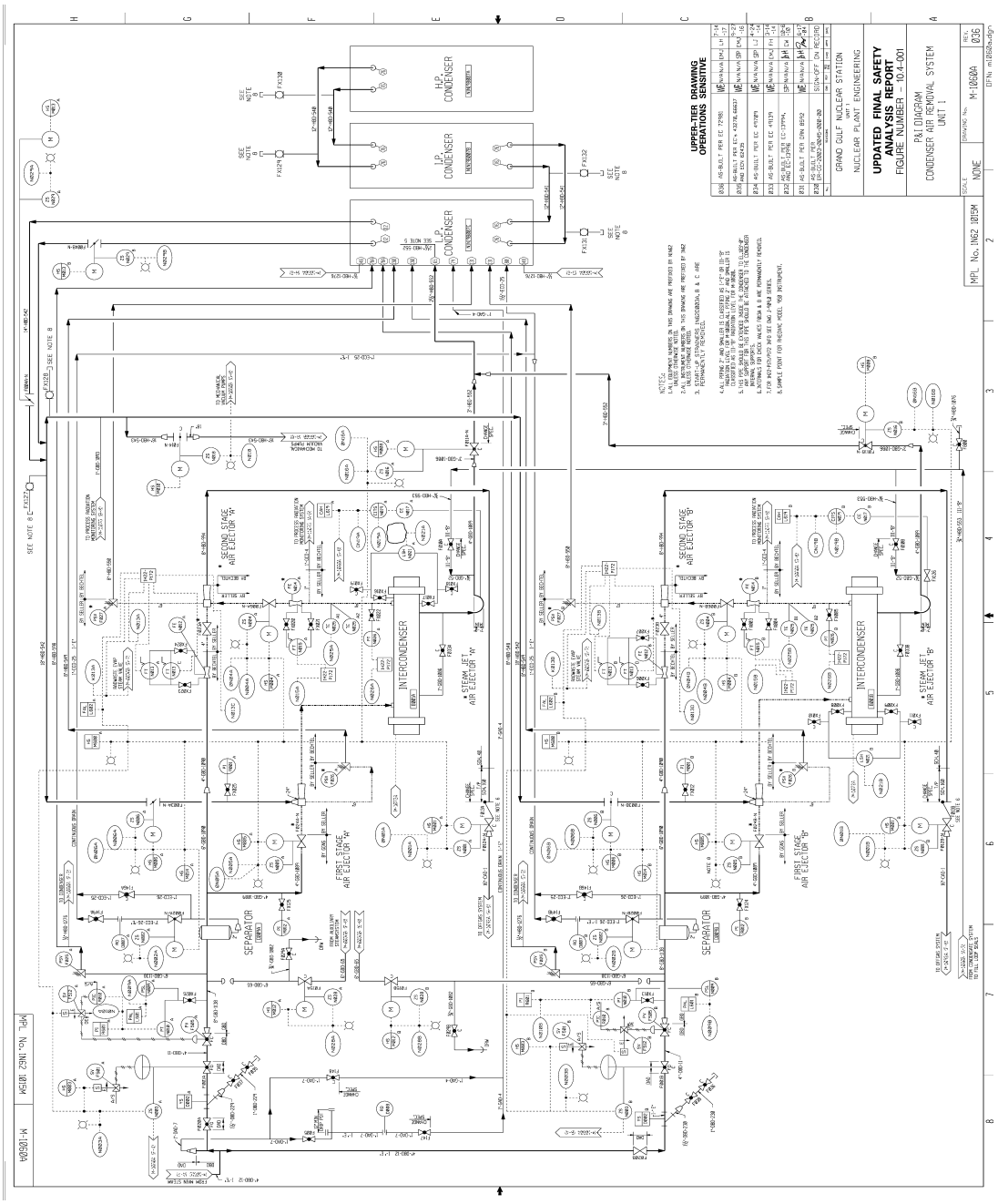
UPDATED FINAL SAFETY ANALYSIS REPORT
FIGURE NUMBER - 10.4-001
P&I DIAGRAM
CONDENSER AIR REMOVAL SYSTEM
UNIT 1
GRAND GULF NUCLEAR STATION
NUCLEAR PLANT ENGINEERING
M-1060A
H.P. CONDENSER
I.P. CONDENSER
L.P. CONDENSER
INTERCONDENSER
SEPARATOR
FIRST STAGE AIR EJECTOR
SECOND STAGE AIR EJECTOR
STEAM JET AIR EJECTOR

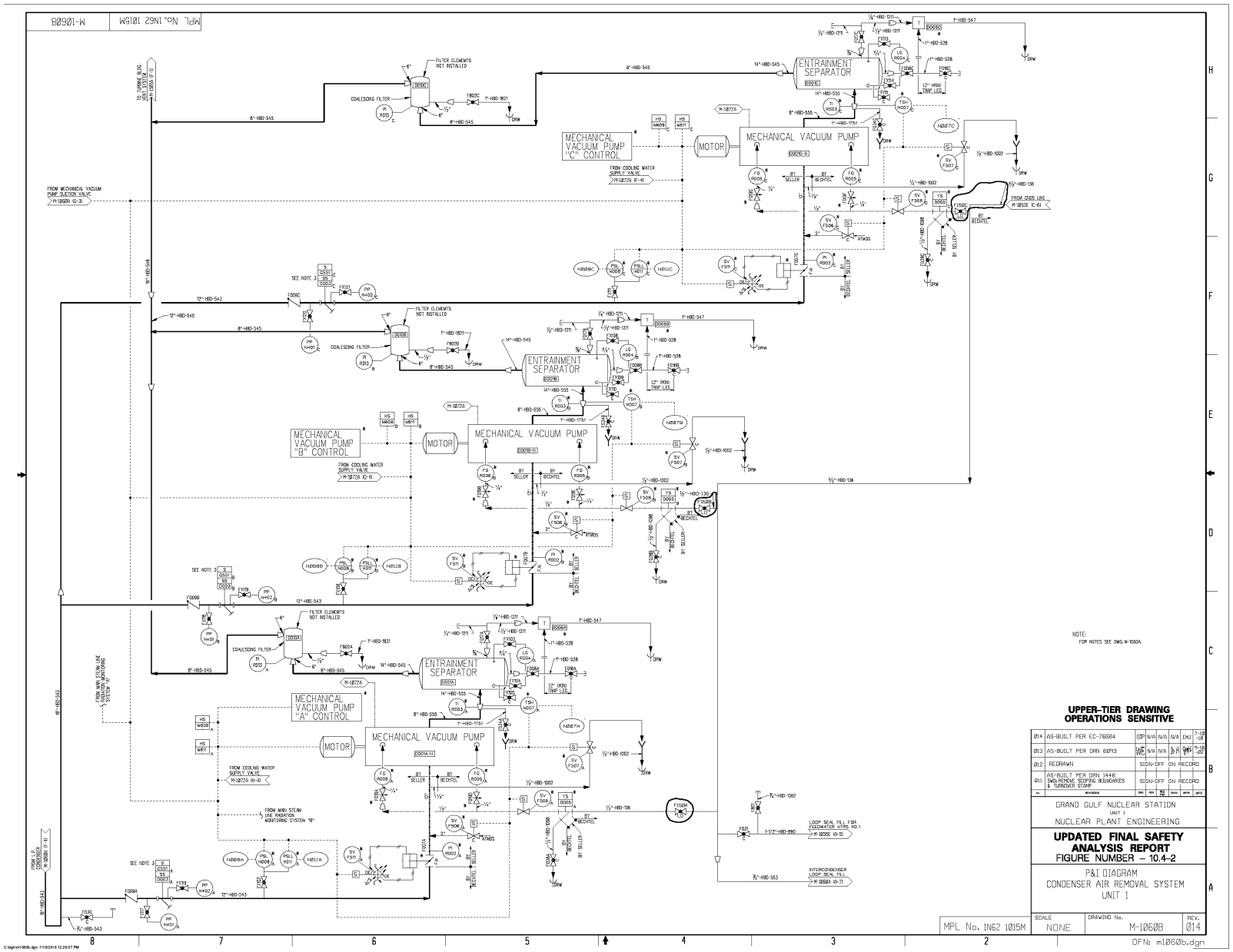
ENTRAINMENT SEPARATOR
MECHANICAL VACUUM PUMP
MECHANICAL VACUUM PUMP "C" CONTROL
MECHANICAL VACUUM PUMP "B" CONTROL
MECHANICAL VACUUM PUMP "A" CONTROL
MOTOR
COALESCING FILTER
FILTER ELEMENTS NOT INSTALLED
FROM COOLING WATER SUPPLY VALVE
FROM MECHANICAL VACUUM PUMP SUCTION VALVE
FROM MAIN STEAM LINE RADIATION MONITORING SYSTEM "B"
FROM MAIN STEAM LINE RADIATION MONITORING SYSTEM "A"
FROM LP CONDENSER
LOOP SEAL FILL FOR FEEDWATER STRS. NO.1
INTERCONDENSER LOOP SEAL FILL
NOTE:
FOR NOTES SEE DWG. M-1060A.
UPPER-TIER DRAWING OPERATIONS SENSITIVE
014 AS-BUILT PER EC-76684
013 AS-BUILT PER DRN 80913
012 REDRAWN
011 AS-BUILT PER DRN 1448 SWD:REMOVE SCOPING BOUNDARIES & TURNOVER STAMP
SIGN-OFF ON RECORD
GRAND GULF NUCLEAR STATION
UNIT 1
NUCLEAR PLANT ENGINEERING
UPDATED FINAL SAFETY ANALYSIS REPORT
FIGURE NUMBER – 10.4-2
P&I DIAGRAM
CONDENSER AIR REMOVAL SYSTEM
UNIT 1
SCALE NONE
DRAWING No. M-1060B
REV. 014
MPL No. 1N62 1015M
DFN: m1060b.dgn

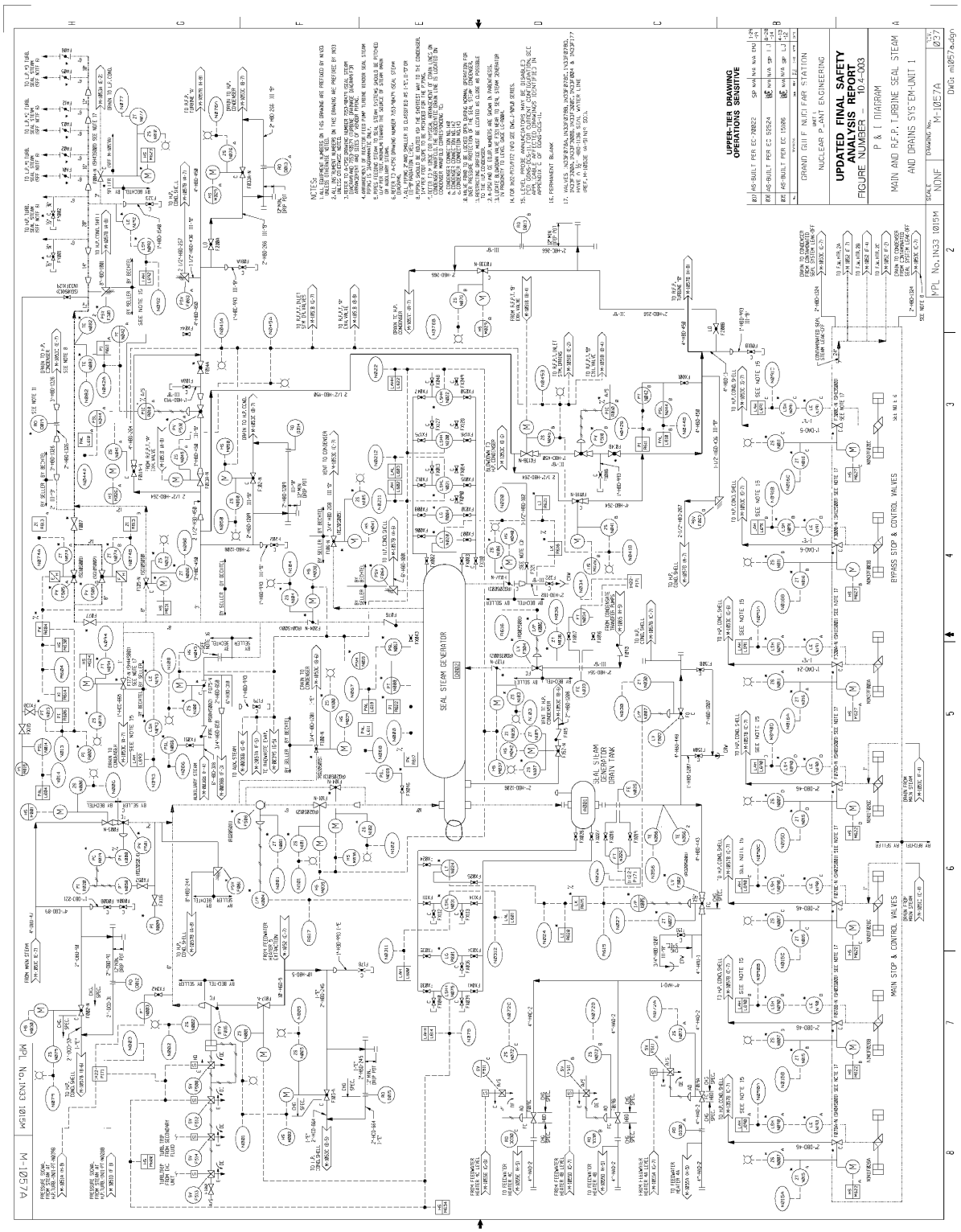
UPDATED FINAL SAFETY ANALYSIS REPORT
FIGURE NUMBER 10.4-3
P & I DIAGRAM
MAIN AND R.F.P. TURBINE SEAL STEAM AND DRAINS SYSTEM-UNIT 1
GRAND GULF NUCLEAR STATION
UNIT 1
NUCLEAR PLANT ENGINEERING
SEAL STEAM EVAPORATOR
SEAL STEAM CONDENSER DRAIN TANK
MAIN STOP & CONTROL VALVES
BYPASS STOP & CONTROL VALVES
M-1057A

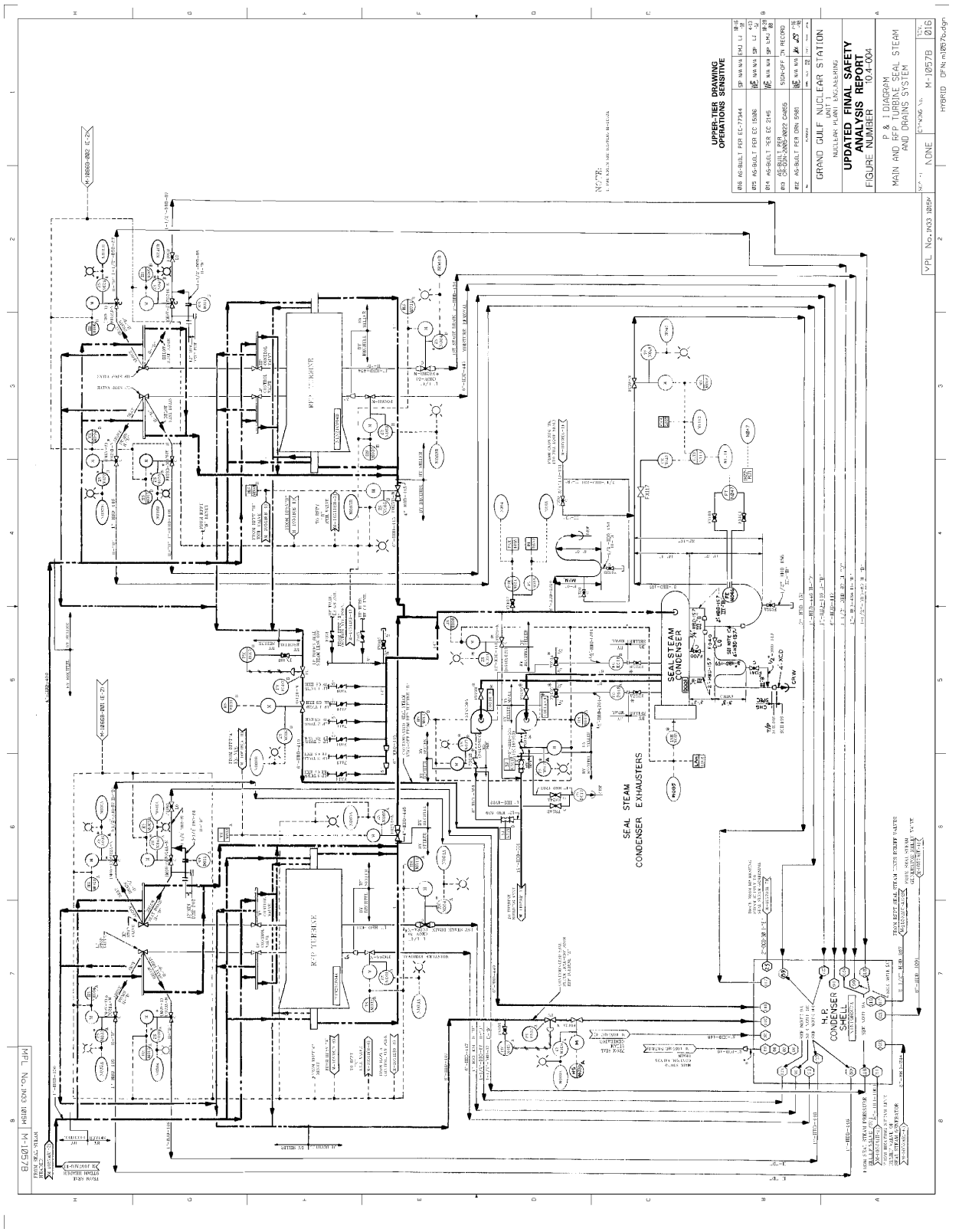
UPPER-TIER DRAWING
OPERATIONS SENSITIVE
GRAND GULF NUCLEAR STATION
UNIT 1
NUCLEAR PLANT ENGINEERING
UPDATED FINAL SAFETY
ANALYSIS REPORT
FIGURE NUMBER 10.4-004
P & I DIAGRAM
MAIN AND RFP TURBINE SEAL STEAM
AND DRAINS SYSTEM
M-1057B
SEAL STEAM
CONDENSER
SEAL STEAM
CONDENSER EXHAUSTERS
H.P.
CONDENSER
M-1057B

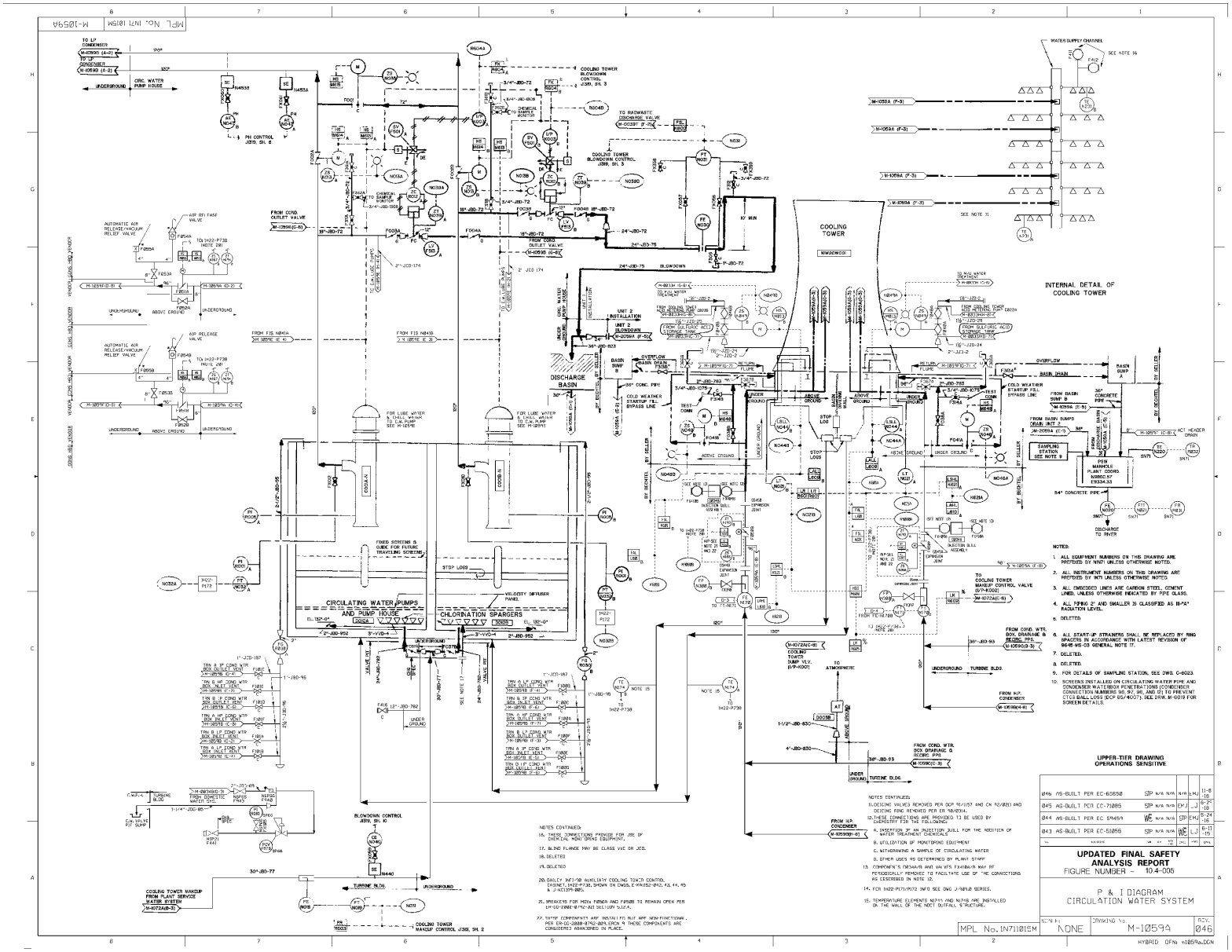
COOLING TOWER
INTERNAL DETAIL OF COOLING TOWER
DISCHARGE BASIN
CIRCULATING WATER PUMPS AND PUMP HOUSE
CHLORINATION SPARGERS
UPPER-TIER DRAWING OPERATIONS SENSITIVE
UPDATED FINAL SAFETY ANALYSIS REPORT
FIGURE NUMBER - 10.4-005
P & I DIAGRAM
CIRCULATION WATER SYSTEM
MPL No. IN711015M
SCALE NONE
DRAWING No. M-10594
REV. 046

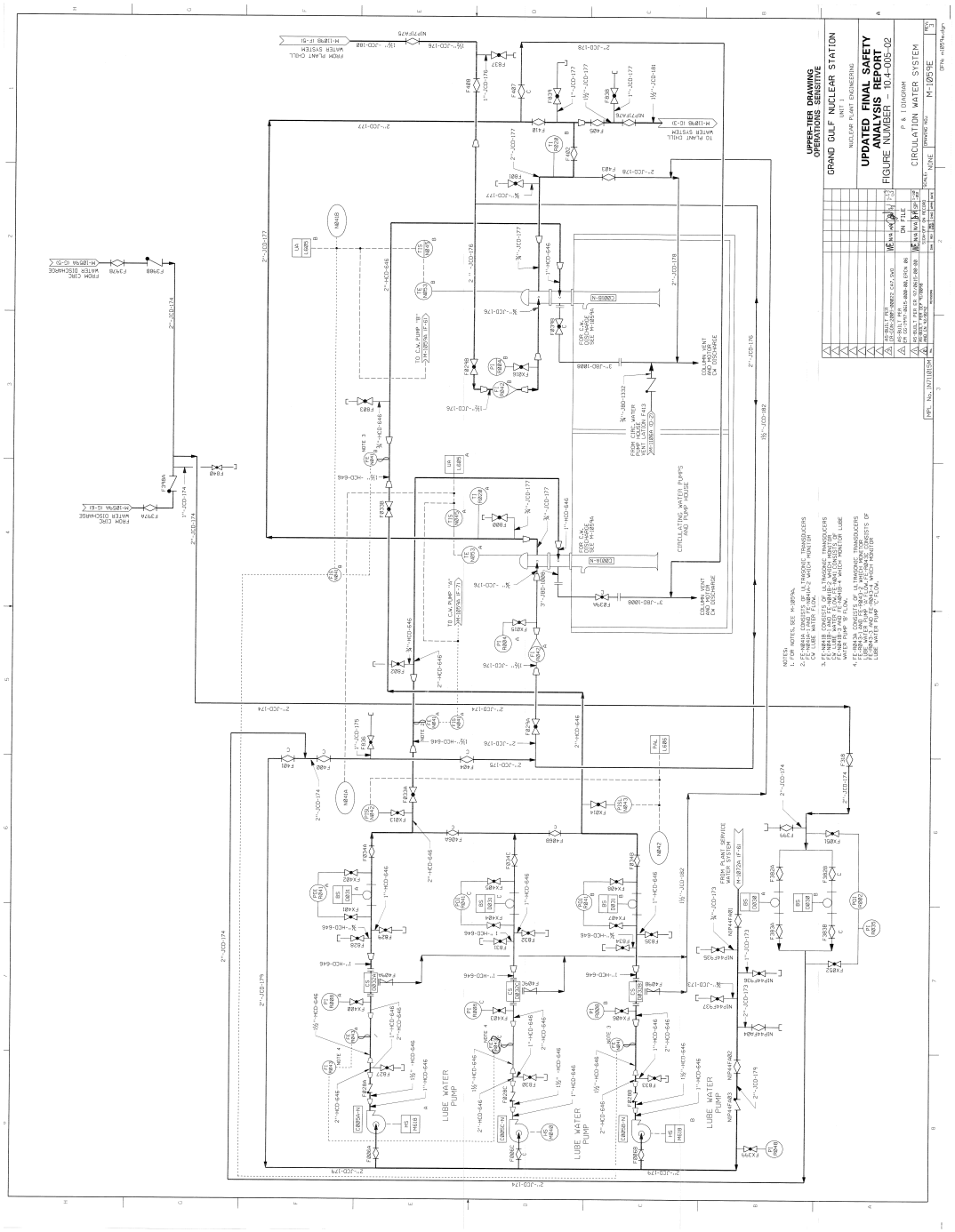
UPPER-TIER DRAWING
OPERATIONS SENSITIVE
GRAND GULF NUCLEAR STATION
UNIT 1
NUCLEAR PLANT ENGINEERING
UPDATED FINAL SAFETY
ANALYSIS REPORT
FIGURE NUMBER – 10.4-005-02
CIRCULATION WATER SYSTEM
P & I DIAGRAM
M-1059E
DN FILE
NOTES:
1. FOR NOTES, SEE M-1059A.
LUBE WATER PUMP
FROM PLANT SERVICE WATER SYSTEM

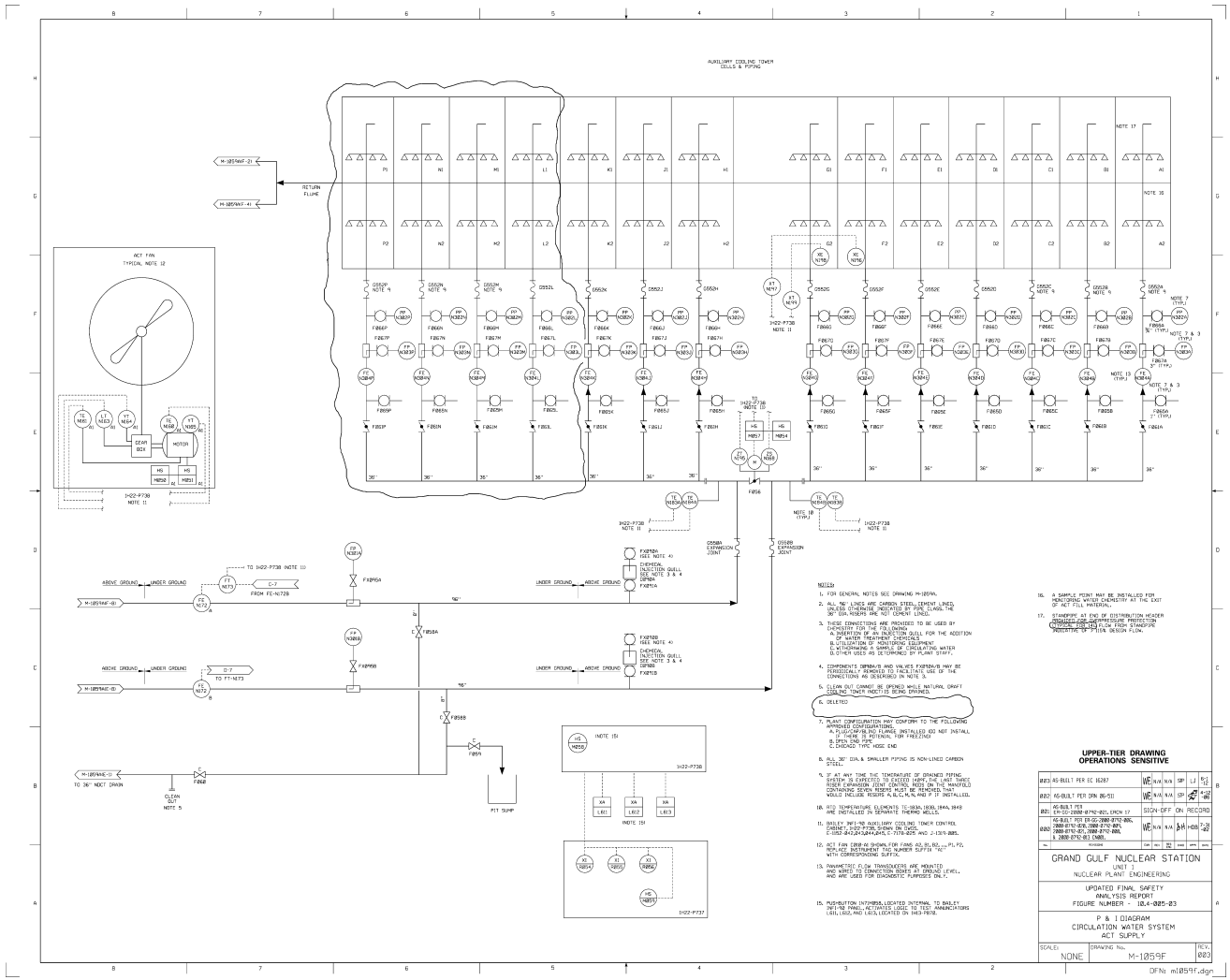
AUXILIARY COOLING TOWER CELLS & PIPING
ACT FAN TYPICAL NOTE 12
RETURN FLUME
NOTES:
1. FOR GENERAL NOTES SEE DRAWING M-1059A.
2. ALL 96" LINES ARE CARBON STEEL, CEMENT LINED, UNLESS OTHERWISE INDICATED BY PIPE CLASS. THE 36" DIA. RISERS ARE NOT CEMENT LINED.
3. THESE CONNECTIONS ARE PROVIDED TO BE USED BY CHEMISTRY FOR THE FOLLOWING:
A. INSERTION OF AN INJECTION QUILL FOR THE ADDITION OF WATER TREATMENT CHEMICALS.
B. UTILIZATION OF MONITORING EQUIPMENT.
C. WITHDRAWING A SAMPLE OF CIRCULATING WATER.
D. OTHER USES AS DETERMINED BY PLANT STAFF.
4. COMPONENTS DRN04/B AND VALVES FXR02A/B MAY BE PERIODICALLY REMOVED TO FACILITATE USE OF THE CONNECTIONS AS DESCRIBED IN NOTE 3.
5. CLEAN OUT CANNOT BE OPENED WHILE NATURAL DRAFT COOLING TOWER INDICT IS BEING DRAINED.
6. DELETED
7. PLANT CONFIGURATION MAY CONFORM TO THE FOLLOWING APPROVED CONFIGURATIONS.
A. PLUG/CAP/BLIND FLANGE INSTALLED DO NOT INSTALL IF THERE IS POTENTIAL FOR FREEZING.
B. OPEN END PIPE.
C. CHICAGO TYPE HOSE END.
8. ALL 36" DIA. & SMALLER PIPING IS NON-LINED CARBON STEEL.
9. IF AT ANY TIME THE TEMPERATURE OF DRAINED PIPING SYSTEM IS EXPECTED TO EXCEED 140°F, THE LAST TWO RISER EXPANSION JOINT CONTROL RODS ON THE MANIFOLD CONTAINING SEVEN RISERS MUST BE REMOVED. THAT WOULD INCLUDE RISERS A, B, C, M, N, AND P IF INSTALLED.
10. RTD TEMPERATURE ELEMENTS TE-1830A, 1830B, 1840A, 1840B ARE INSTALLED IN SEPARATE THERMO WELLS.
11. BAILEY INFI-90 AUXILIARY COOLING TOWER CONTROL CABINET, 1H22-P738, SHOWN ON DWGS. E-1052-2412-2412-2412-2412, E-7778-025 AND J-1319-005.
12. ACT FAN DRN-A6 SHOWN FOR FANS A2, B1, B2, ..., P1, P2. REPLACE INSTRUMENT TAG NUMBER SUFFIX "A6" WITH CORRESPONDING SUFFIX.
13. PANAMETRIC FLOW TRANSDUCERS ARE MOUNTED AND WIRED TO CONNECTION BOXES AT GROUND LEVEL, AND ARE USED FOR DIAGNOSTIC PURPOSES ONLY.
15. PUSH-BUTTON INTERBOX, LOCATED INTERNAL TO BAILEY INFI-90 PANEL, ACTIVATES LOGIC TO TEST ANNUNCIATORS L61L, L62L AND L63L, LOCATED ON 1H13-P870.
16. A SAMPLE POINT MAY BE INSTALLED FOR MONITORING WATER CHEMISTRY AT THE EXIT OF ACT FILL MATERIAL.
17. STANDPIPE AT END OF DISTRIBUTION HEADER PROVIDED FOR OVERPRESSURE PROTECTION (NORMAL FOR FILL FLOW FROM STANDPIPE PROTECTIVE OF PTIDA DESIGN FLOW.
UPPER-TIER DRAWING
OPERATIONS SENSITIVE
GRAND GULF NUCLEAR STATION
UNIT 1
NUCLEAR PLANT ENGINEERING
UPDATED FINAL SAFETY ANALYSIS REPORT
FIGURE NUMBER - 10.4-005-03
P & I DIAGRAM
CIRCULATION WATER SYSTEM
ACT SUPPLY
SCALE: NONE
DRAWING No. M-1059F
REV. 003
DFN: m1059f.dgn

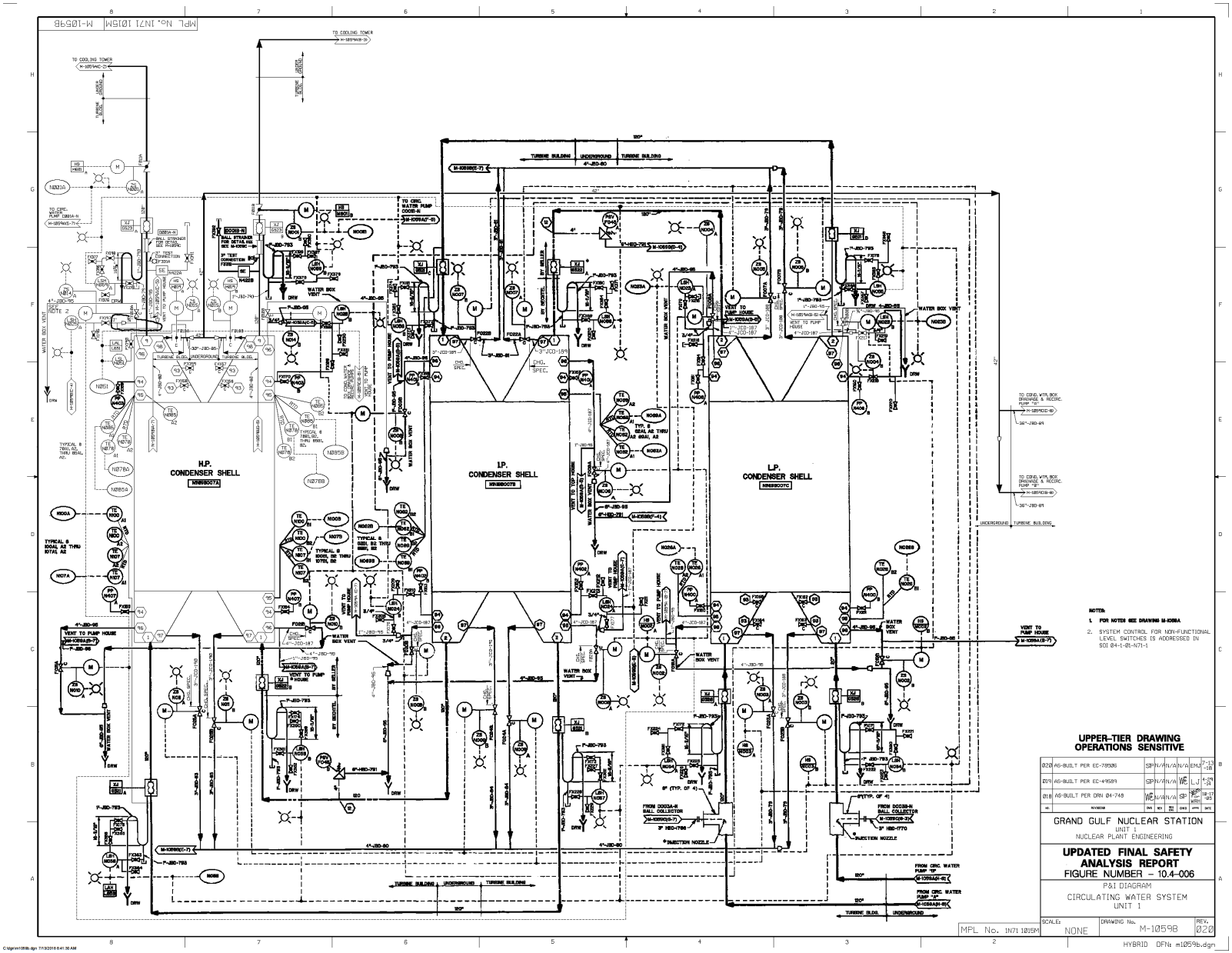
H.P. CONDENSER SHELL
I.P. CONDENSER SHELL
L.P. CONDENSER SHELL
NOTES:
1. FOR NOTES SEE DRAWING M-1059A
2. SYSTEM CONTROL FOR NON-FUNCTIONAL LEVEL SWITCHES IS ADDRESSED IN SDI 04-1-01-N71-1
UPPER-TIER DRAWING OPERATIONS SENSITIVE
GRAND GULF NUCLEAR STATION
UNIT 1
NUCLEAR PLANT ENGINEERING
UPDATED FINAL SAFETY ANALYSIS REPORT
FIGURE NUMBER - 10.4-006
P&I DIAGRAM
CIRCULATING WATER SYSTEM
UNIT 1
SCALE: NONE
DRAWING No. M-1059B
REV. 020
MPL No. 1N71 1015M
HYBRID DFN: m1059b.dgn

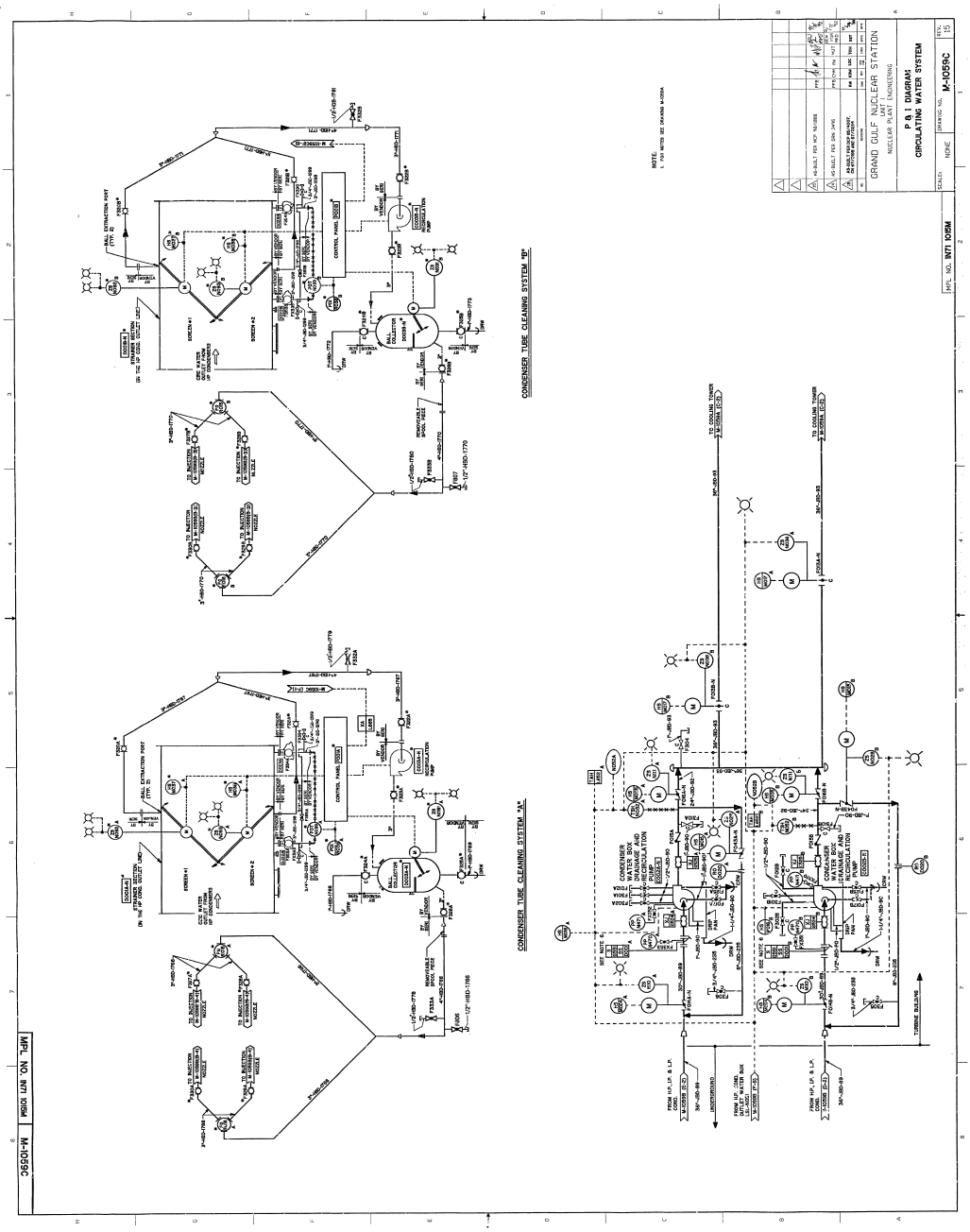
GRAND GULF NUCLEAR STATION
UNIT
NUCLEAR PLANT ENGINEERING
P & I DIAGRAM
CIRCULATING WATER SYSTEM
M-1059C
CONDENSER TUBE CLEANING SYSTEM "B"
CONDENSER TUBE CLEANING SYSTEM "A"
CONDENSER WATER BOX PRIMING AND RECIRCULATION PUMP
CONDENSER WATER BOX DRAINAGE AND RECIRCULATION PUMP
TO COOLING TOWER
FROM COOLING TOWER
TURBINE BUILDING

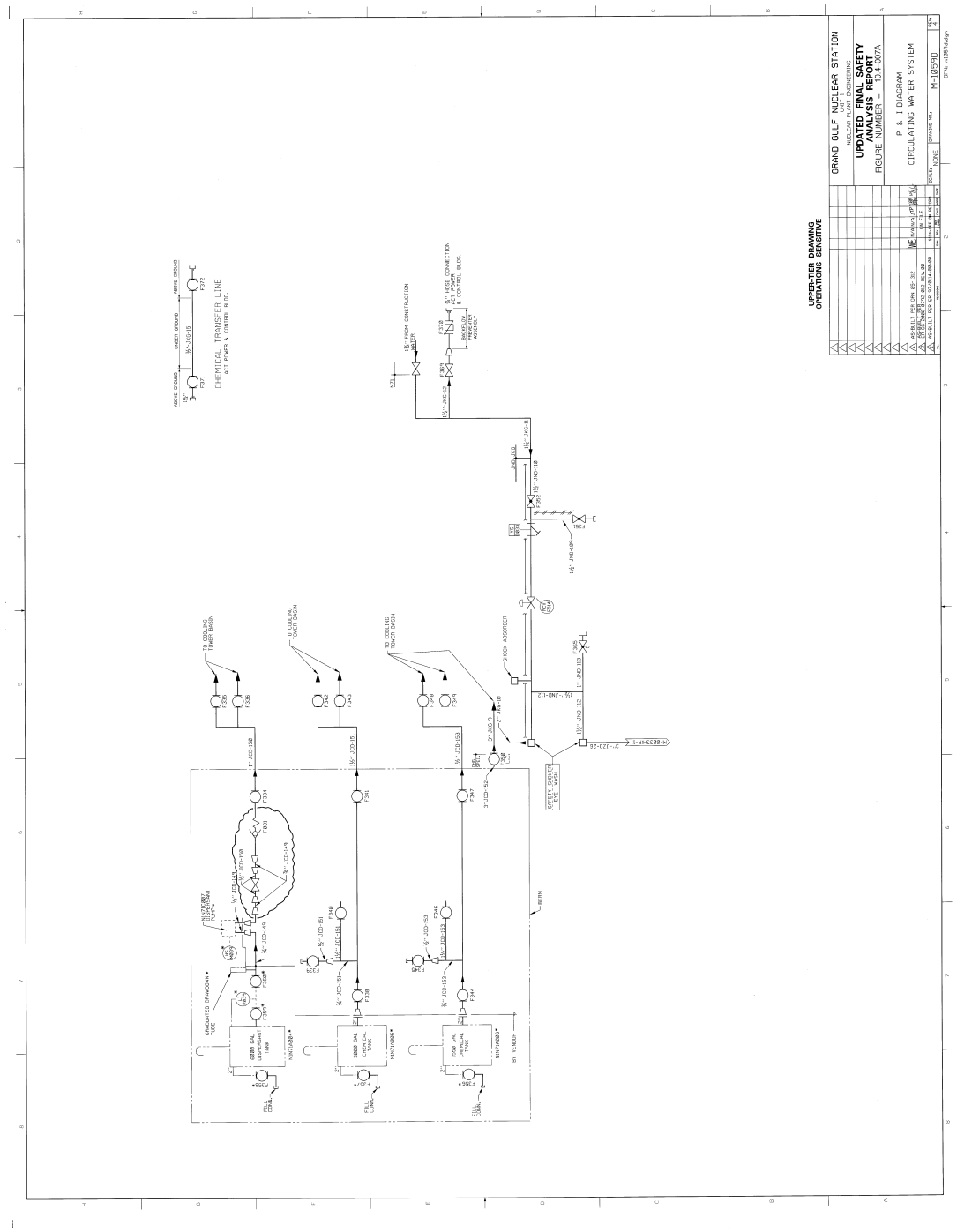
GRAND GULF NUCLEAR STATION
UNIT 1
NUCLEAR PLANT ENGINEERING
UPDATED FINAL SAFETY ANALYSIS REPORT
FIGURE NUMBER - 10.4-007A
P & I DIAGRAM
CIRCULATING WATER SYSTEM
M-1059D
UPPER-TIER DRAWING
OPERATIONS SENSITIVE
CHEMICAL TRANSFER LINE
ACT POWER & CONTROL BLDG.
TO COOLING TOWER BASIN
SHOCK ABSORBER
SAFETY SHOWER EYE WASH
BERM
GRADUATED DRAWDOWN TUBE
FILL CONN.
BY VENDOR

Figure 10.4-8 Deleted

Figure 10.4-9 Deleted

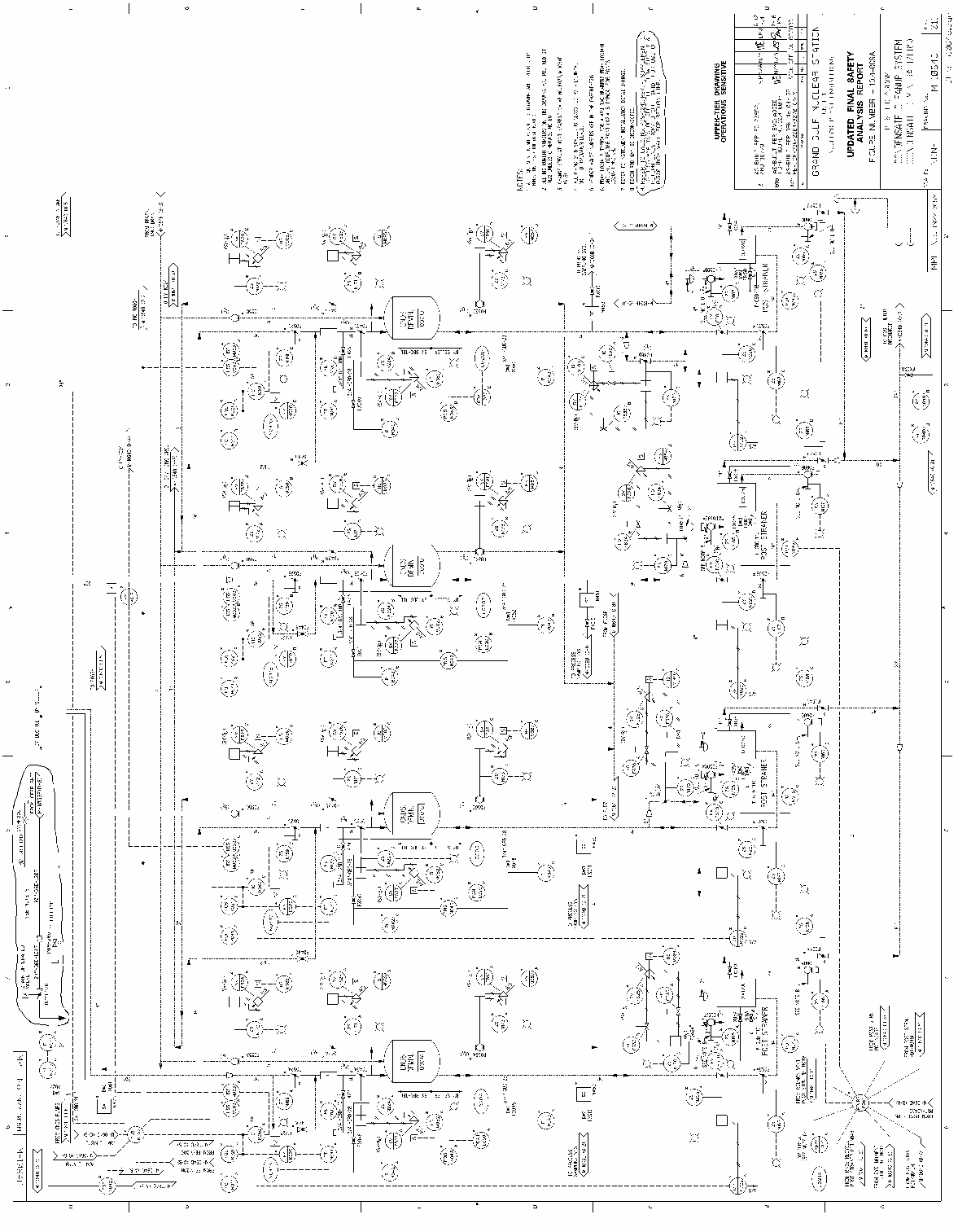

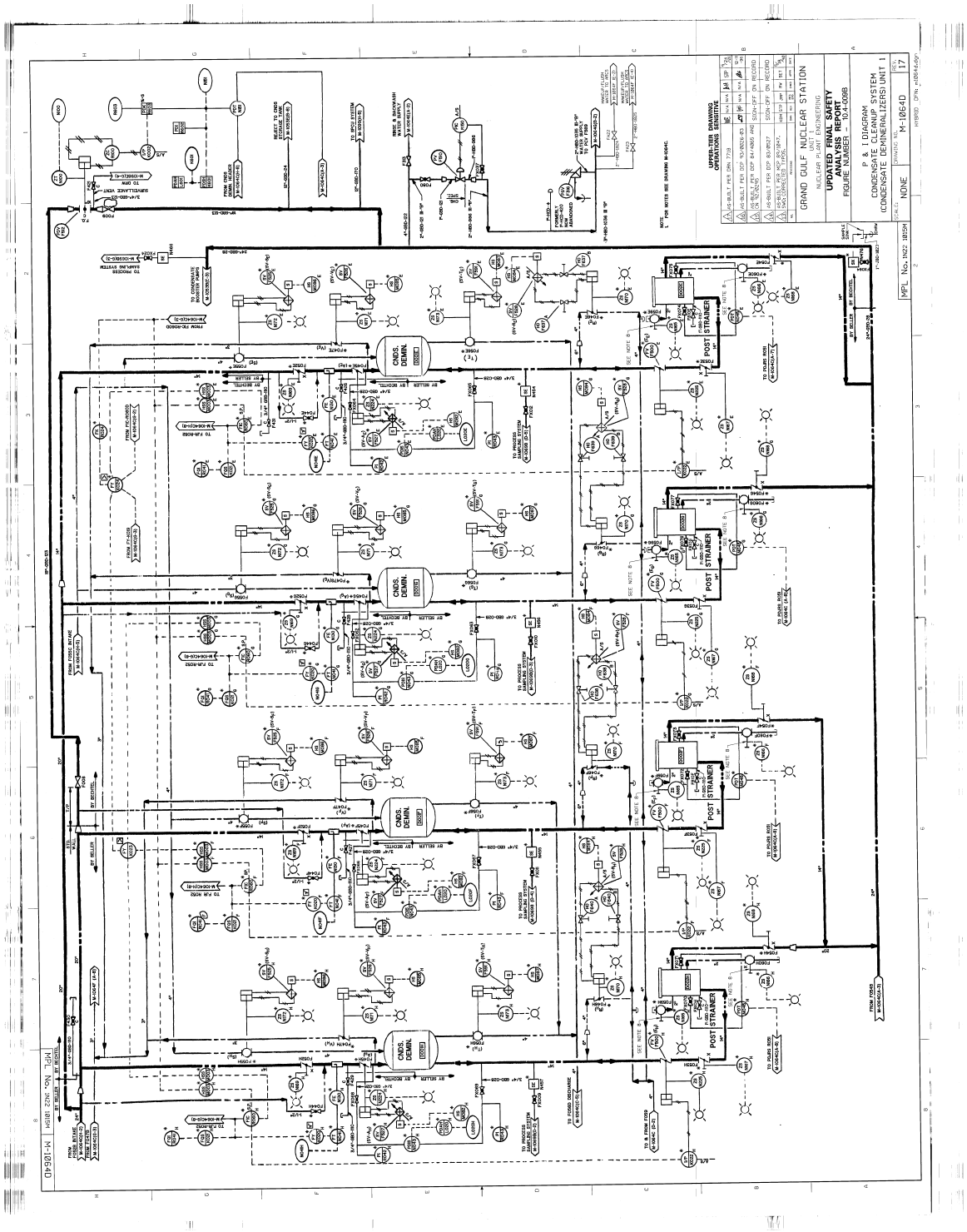
P & I DIAGRAM
CONDENSATE CLEANUP SYSTEM
(CONDENSATE DEMINERALIZERS) UNIT 1
GRAND GULF NUCLEAR STATION
UPDATED FINAL SAFETY ANALYSIS REPORT
FIGURE NUMBER 10.4-63B
M-1064D
CNDS. DEMIN.
POST STRAINER

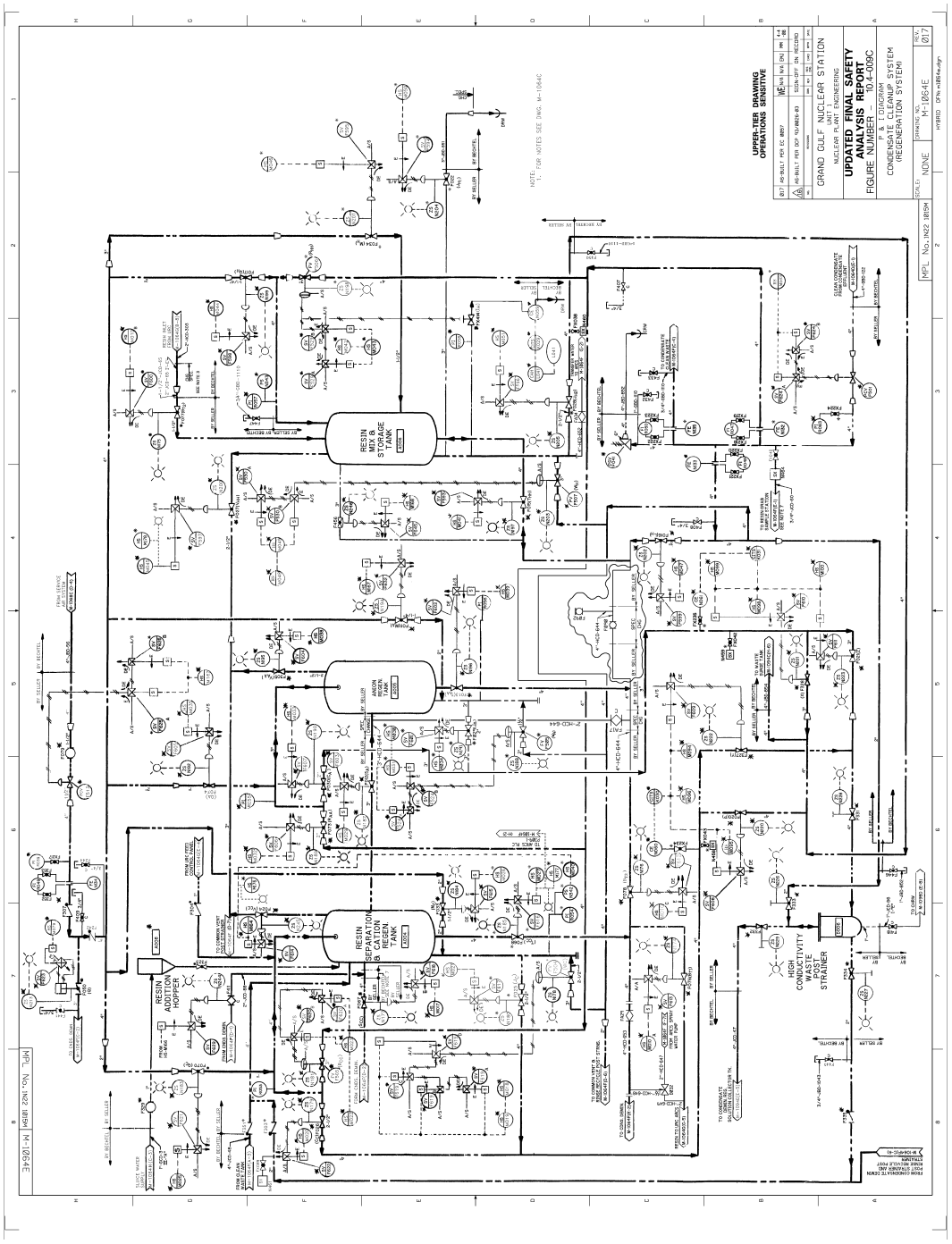
UPPER-TIER DRAWING
OPERATIONS SENSITIVE
GRAND GULF NUCLEAR STATION
UNIT 1
NUCLEAR PLANT ENGINEERING
UPDATED FINAL SAFETY
ANALYSIS REPORT
FIGURE NUMBER - 10.4-009C
CONDENSATE CLEANUP SYSTEM
(REGENERATION SYSTEM)
SCALE: NONE
DRAWING NO. M-1064E
REV. 017
RESIN MIX & STORAGE TANK
ANION REGEN. TANK
RESIN SEPARATION & CATION REGEN. TANK
RESIN ADDITION HOPPER
HIGH CONDUCTIVITY WASTE POST STRAINER
MPL No. 1N22 1015M
M-1064E

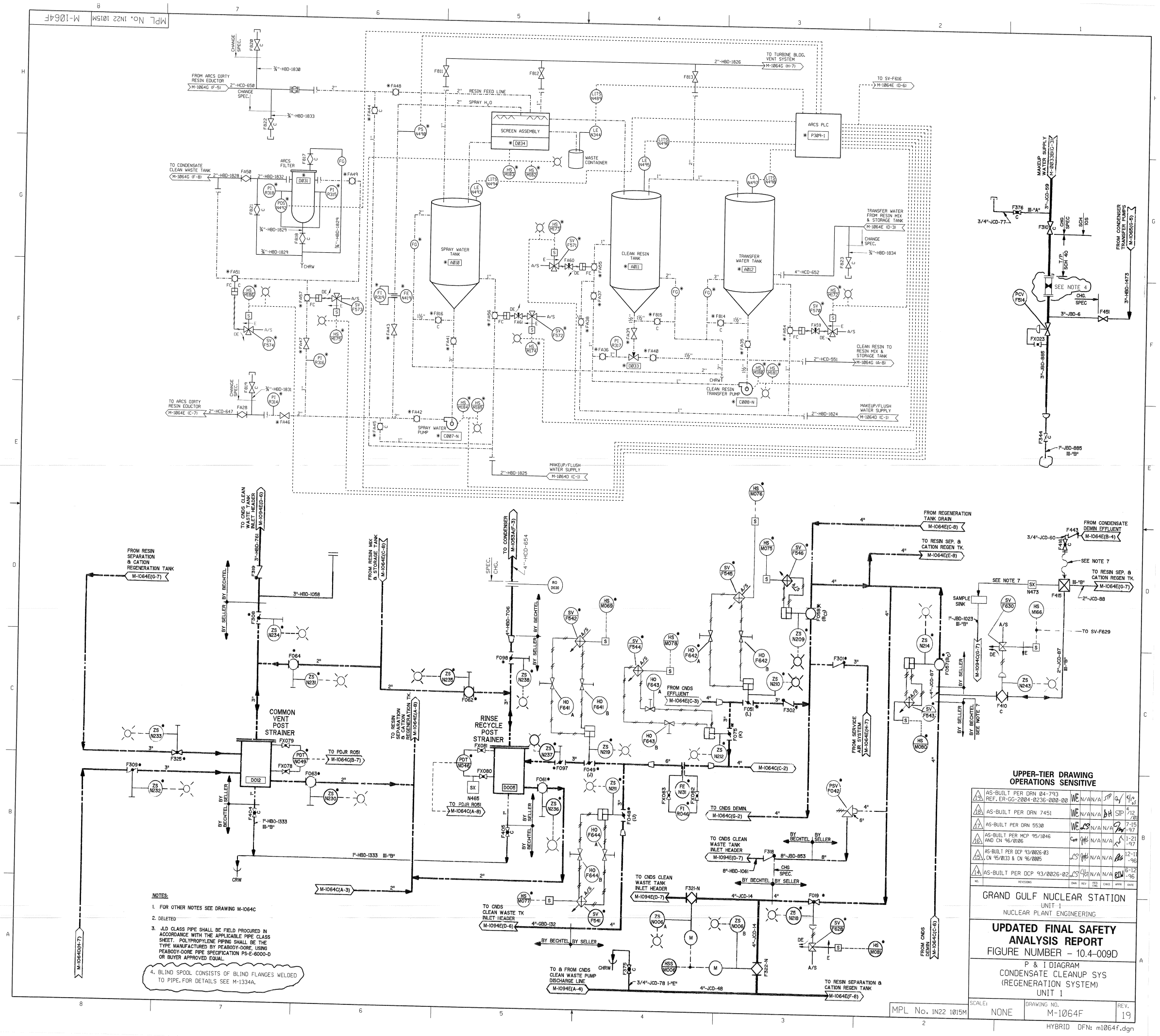
MPL No. 1N22 1015M
M-1064F
SPRAY WATER TANK
CLEAN RESIN TANK
TRANSFER WATER TANK
SCREEN ASSEMBLY
ARCS PLC
ARCS FILTER
WASTE CONTAINER
SPRAY WATER PUMP
CLEAN RESIN TRANSFER PUMP
COMMON VENT POST STRAINER
RINSE RECYCLE POST STRAINER
NOTES:
1. FOR OTHER NOTES SEE DRAWING M-1064C
2. DELETED
3. JLD CLASS PIPE SHALL BE FIELD PROCURED IN ACCORDANCE WITH THE APPLICABLE PIPE CLASS SHEET. POLYPROPYLENE PIPING SHALL BE THE TYPE MANUFACTURED BY PEABODY-DORE, USING PEABODY-DORE PIPE SPECIFICATION PS-E-6000-D OR BUYER APPROVED EQUAL.
4. BLIND SPOOL CONSISTS OF BLIND FLANGES WELDED TO PIPE. FOR DETAILS SEE M-1334A.
UPPER-TIER DRAWING OPERATIONS SENSITIVE
19 AS-BUILT PER DRN 04-793 REF. ER-GG-2004-0236-000-00
18 AS-BUILT PER DRN 7451
17 AS-BUILT PER DRN 5530
16 AS-BUILT PER MCP 95/1046 AND CN 96/0106
15 AS-BUILT PER DCP 93/0026-03, CN 95/0133 & CN 96/0005
14 AS-BUILT PER DCP 93/0026-02
GRAND GULF NUCLEAR STATION
UNIT 1
NUCLEAR PLANT ENGINEERING
UPDATED FINAL SAFETY ANALYSIS REPORT
FIGURE NUMBER - 10.4-009D
P & I DIAGRAM
CONDENSATE CLEANUP SYS
(REGENERATION SYSTEM)
UNIT 1
SCALE: NONE
DRAWING NO. M-1064F
REV. 19
HYBRID DFN: m1064f.dgn

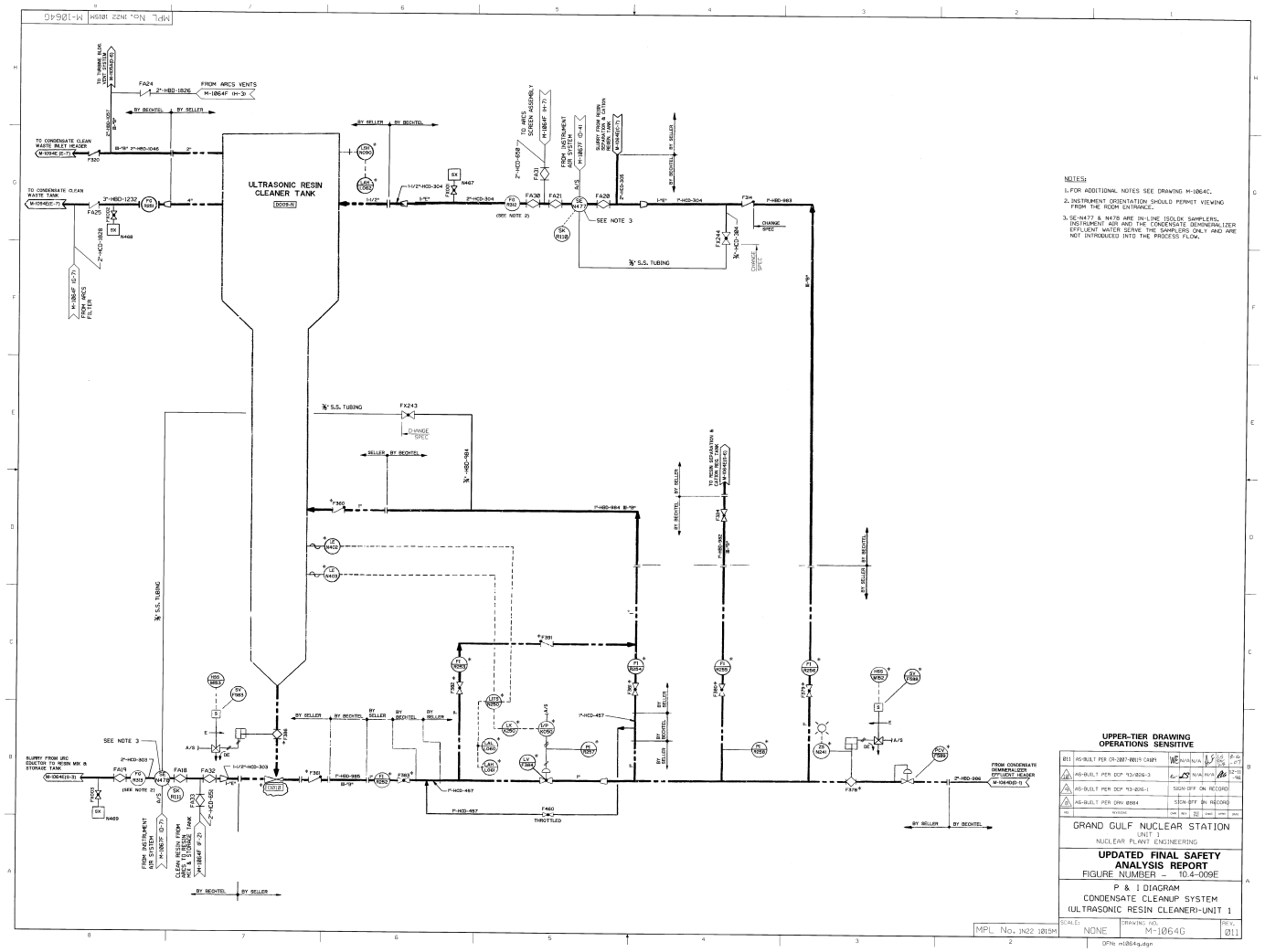
ULTRASONIC RESIN CLEANER TANK
NOTES:
1. FOR ADDITIONAL NOTES SEE DRAWING M-1064C.
2. INSTRUMENT ORIENTATION SHOULD PERMIT VIEWING FROM THE ROOM ENTRANCE.
3. SE-N477 & N478 ARE IN-LINE ISOLOK SAMPLERS. INSTRUMENT AIR AND THE CONDENSATE DEMINERALIZER EFFLUENT WATER SERVE THE SAMPLERS ONLY AND ARE NOT INTRODUCED INTO THE PROCESS FLOW.
UPPER-TIER DRAWING OPERATIONS SENSITIVE
GRAND GULF NUCLEAR STATION
UNIT 1
NUCLEAR PLANT ENGINEERING
UPDATED FINAL SAFETY ANALYSIS REPORT
FIGURE NUMBER - 10.4-009E
P & I DIAGRAM
CONDENSATE CLEANUP SYSTEM
(ULTRASONIC RESIN CLEANER)-UNIT 1
SCALE: NONE
DRAWING NO. M-1064G
REV. 011
MPL No. 1N22 1015M

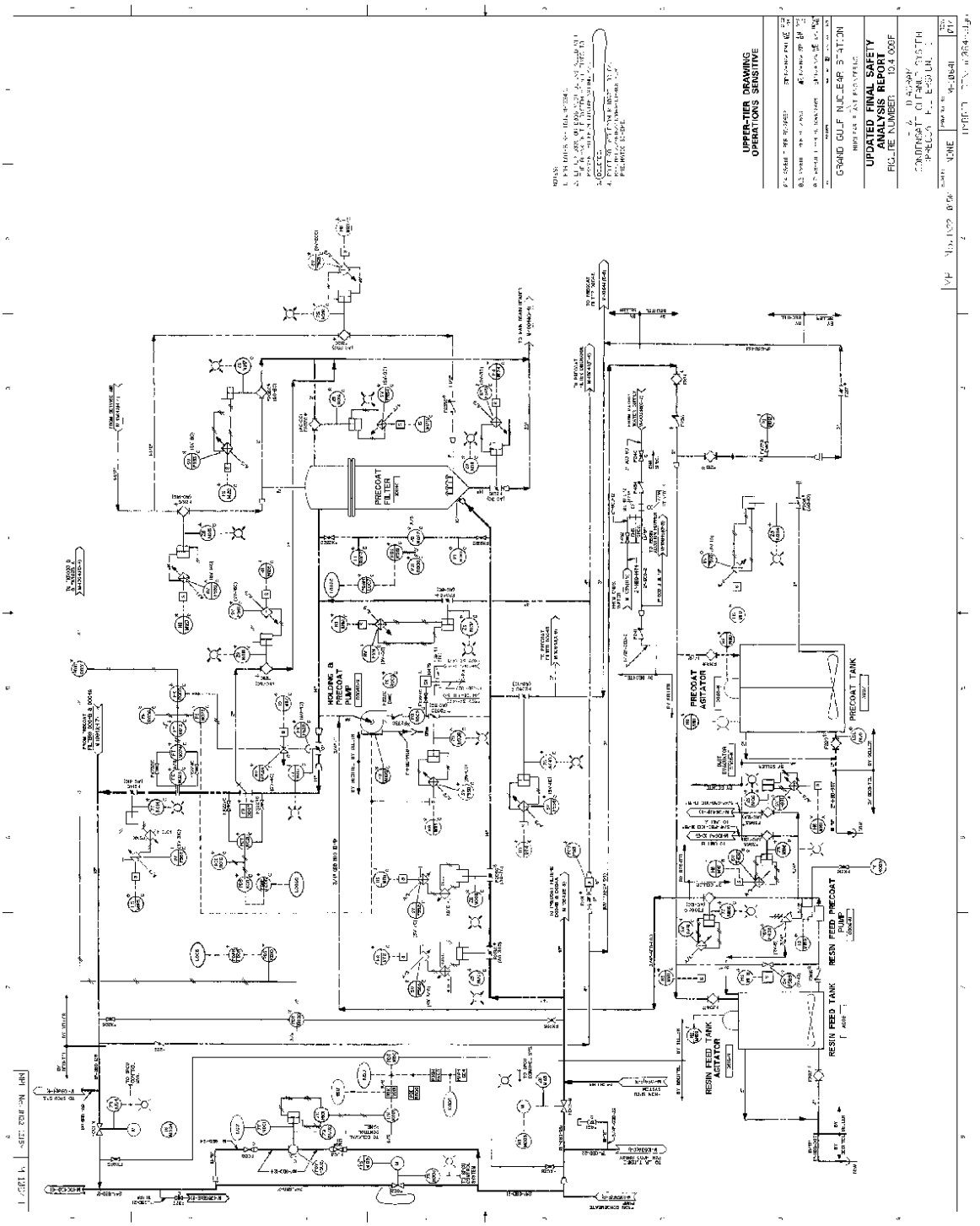
UPPER-TIER DRAWING
OPERATIONS SENSITIVE
UPDATED FINAL SAFETY
ANALYSIS REPORT
FIGURE NUMBER 10.4-00F
GRAND GULF NUCLEAR STATION
PRECOAT FILTER
HOLDING & PRECOAT PUMP
PRECOAT AGITATOR
PRECOAT TANK
RESIN FEED TANK AGITATOR
RESIN FEED TANK
RESIN FEED PRECOAT PUMP

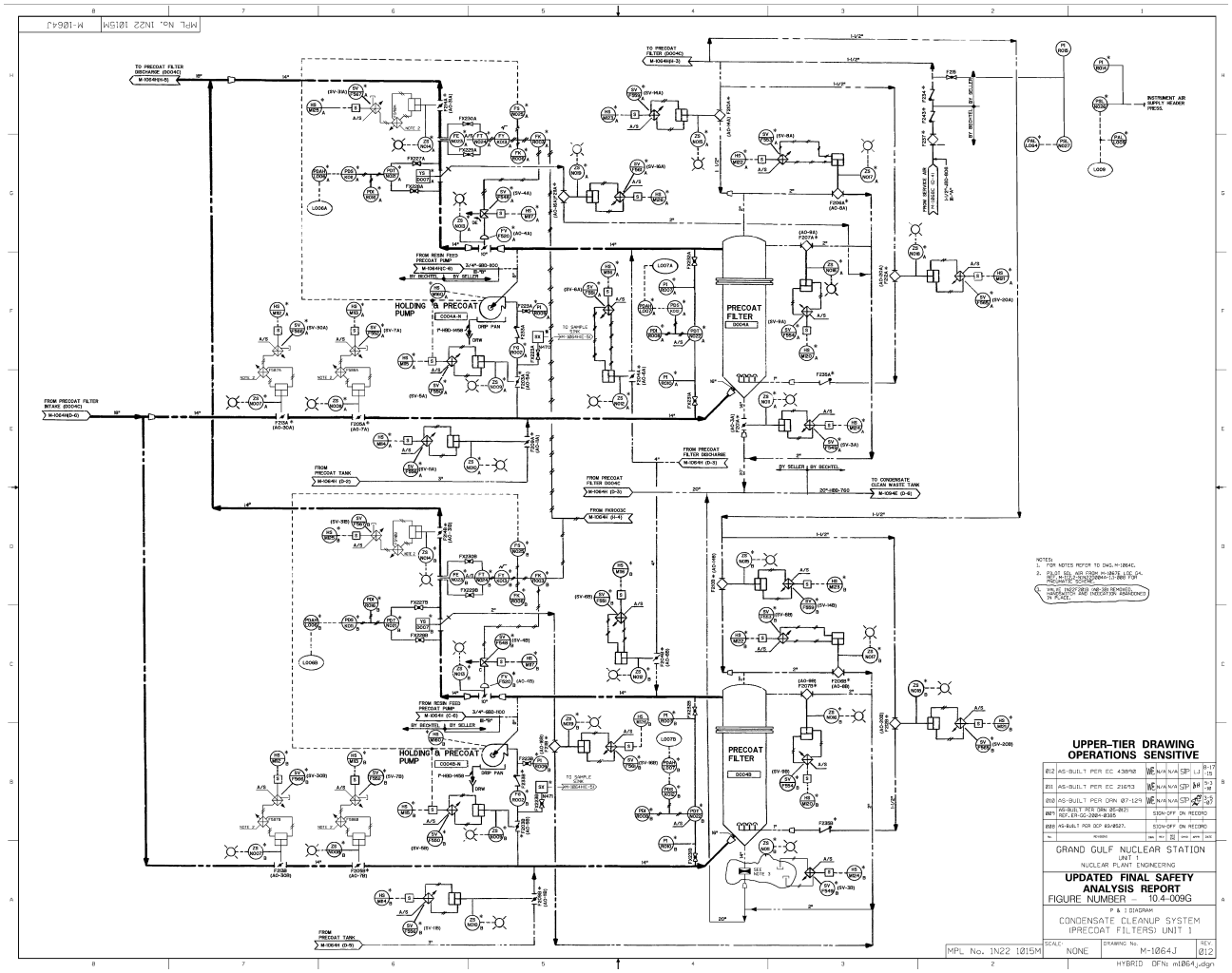
UPPER-TIER DRAWING
OPERATIONS SENSITIVE
GRAND GULF NUCLEAR STATION
UNIT 1
NUCLEAR PLANT ENGINEERING
UPDATED FINAL SAFETY
ANALYSIS REPORT
FIGURE NUMBER 10.4-009G
P & I DIAGRAM
CONDENSATE CLEANUP SYSTEM
(PRECOAT FILTERS) UNIT 1
SCALE: NONE
DRAWING No. M-1064J
REV. 012
MPL No. 1N22 1015M
HYBRID DFN: m1064j.dgn
PRECOAT FILTER
HOLDING & PRECOAT PUMP
INSTRUMENT AIR SUPPLY HEADER PRESS.
TO CONDENSATE CLEAN WASTE TANK
FROM PRECOAT TANK
FROM PRECOAT FILTER DISCHARGE
FROM RESIN FEED PRECOAT PUMP
TO SAMPLE SINK

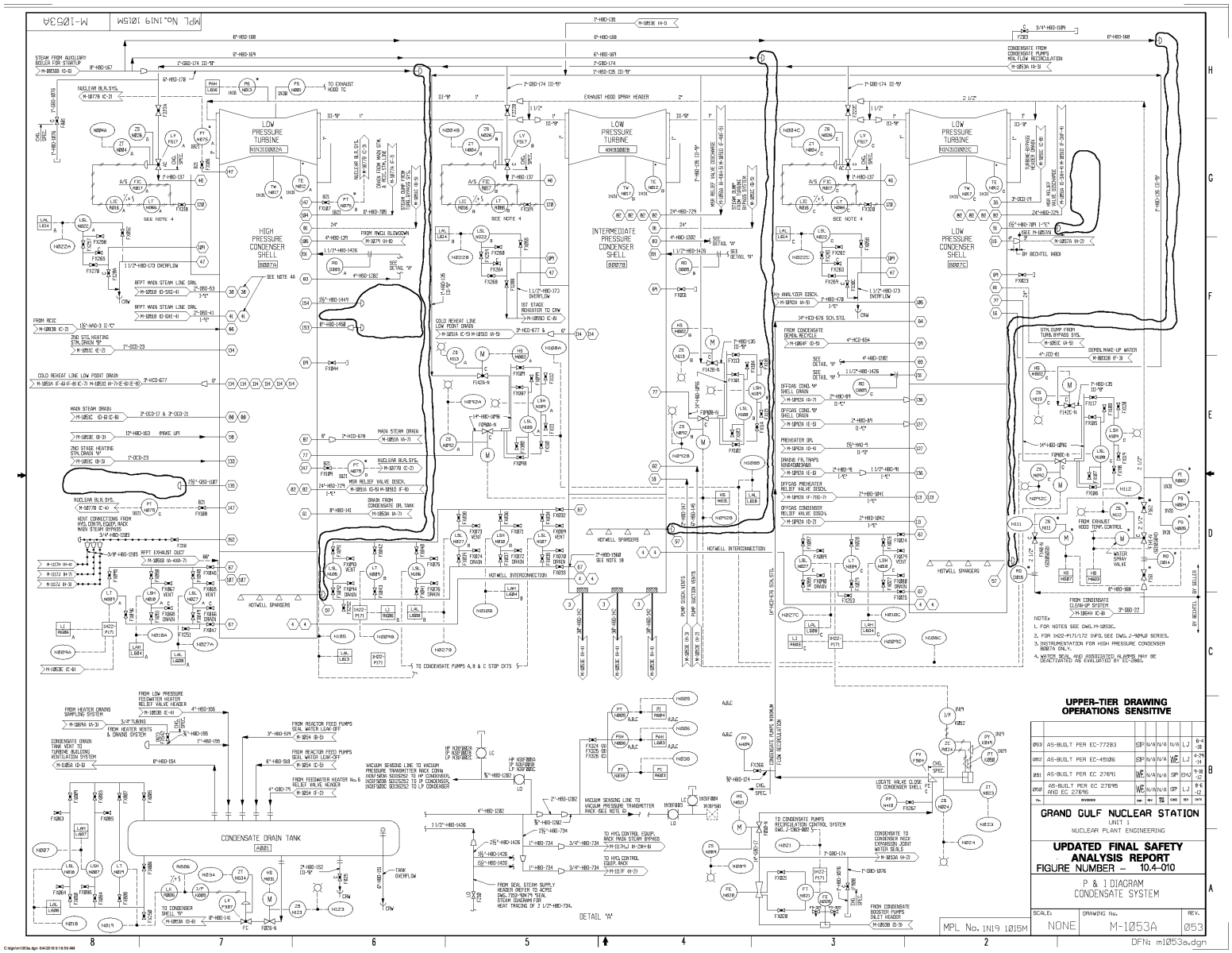
UPPER-TIER DRAWING
OPERATIONS SENSITIVE
GRAND GULF NUCLEAR STATION
UNIT 1
NUCLEAR PLANT ENGINEERING
UPDATED FINAL SAFETY
ANALYSIS REPORT
FIGURE NUMBER - 10.4-010
P & I DIAGRAM
CONDENSATE SYSTEM
SCALE: NONE
DRAWING No. M-1053A
REV. 053
MPL No. 1N19 1015M
DFN: m1053a.dgn
LOW PRESSURE TURBINE
HIGH PRESSURE CONDENSER SHELL
INTERMEDIATE PRESSURE CONDENSER SHELL
LOW PRESSURE CONDENSER SHELL
CONDENSATE DRAIN TANK
DETAIL 'A'

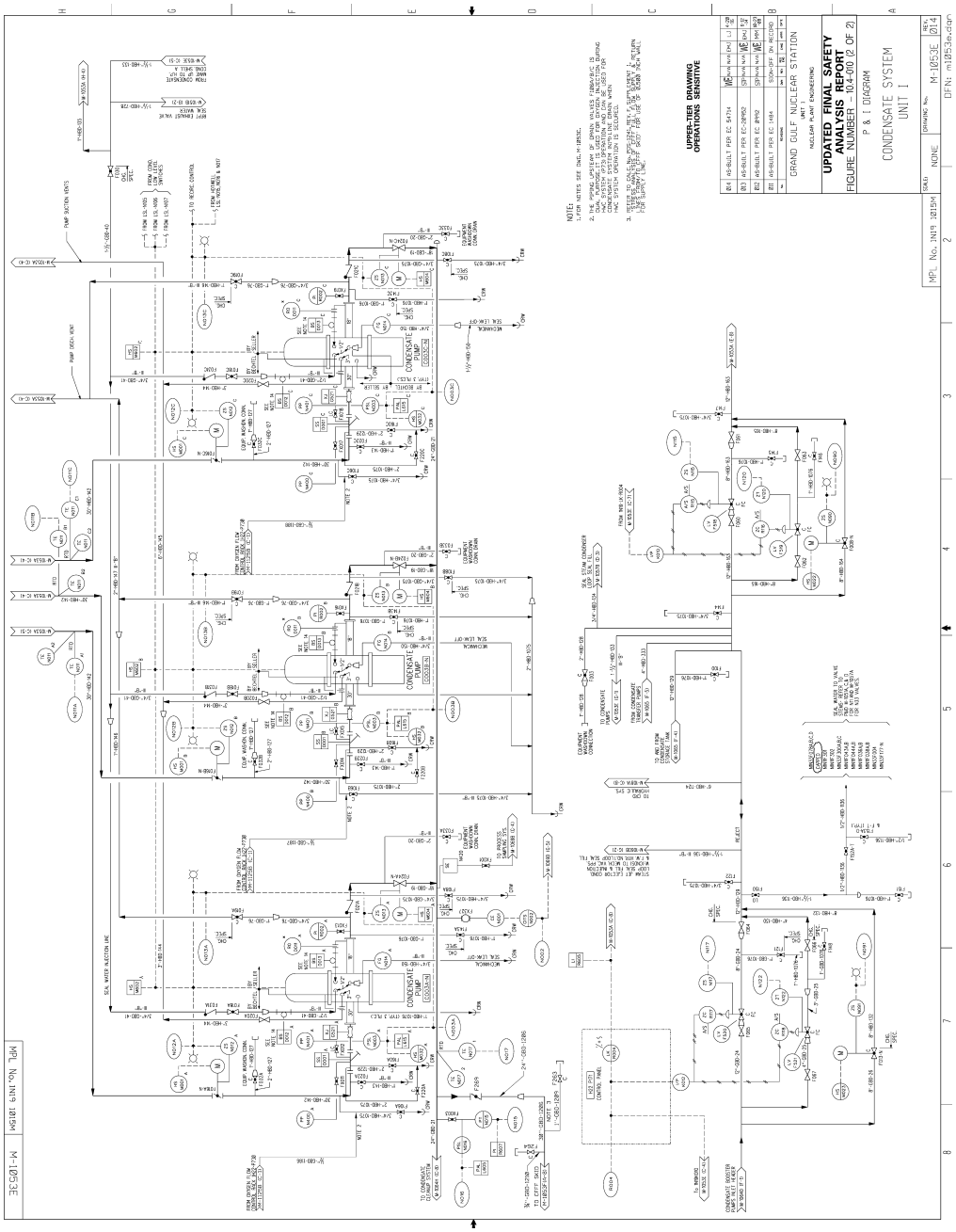
UPDATED FINAL SAFETY ANALYSIS REPORT
FIGURE NUMBER 10.4-00 (2 OF 2)
P & I DIAGRAM
CONDENSATE SYSTEM
UNIT 1
GRAND GULF NUCLEAR STATION
UNIT 1
NUCLEAR ENGINEERING
UPPER-TIER DRAWING
OPERATIONS SENSITIVE
M-1053E
DFN: m1053e.dgn

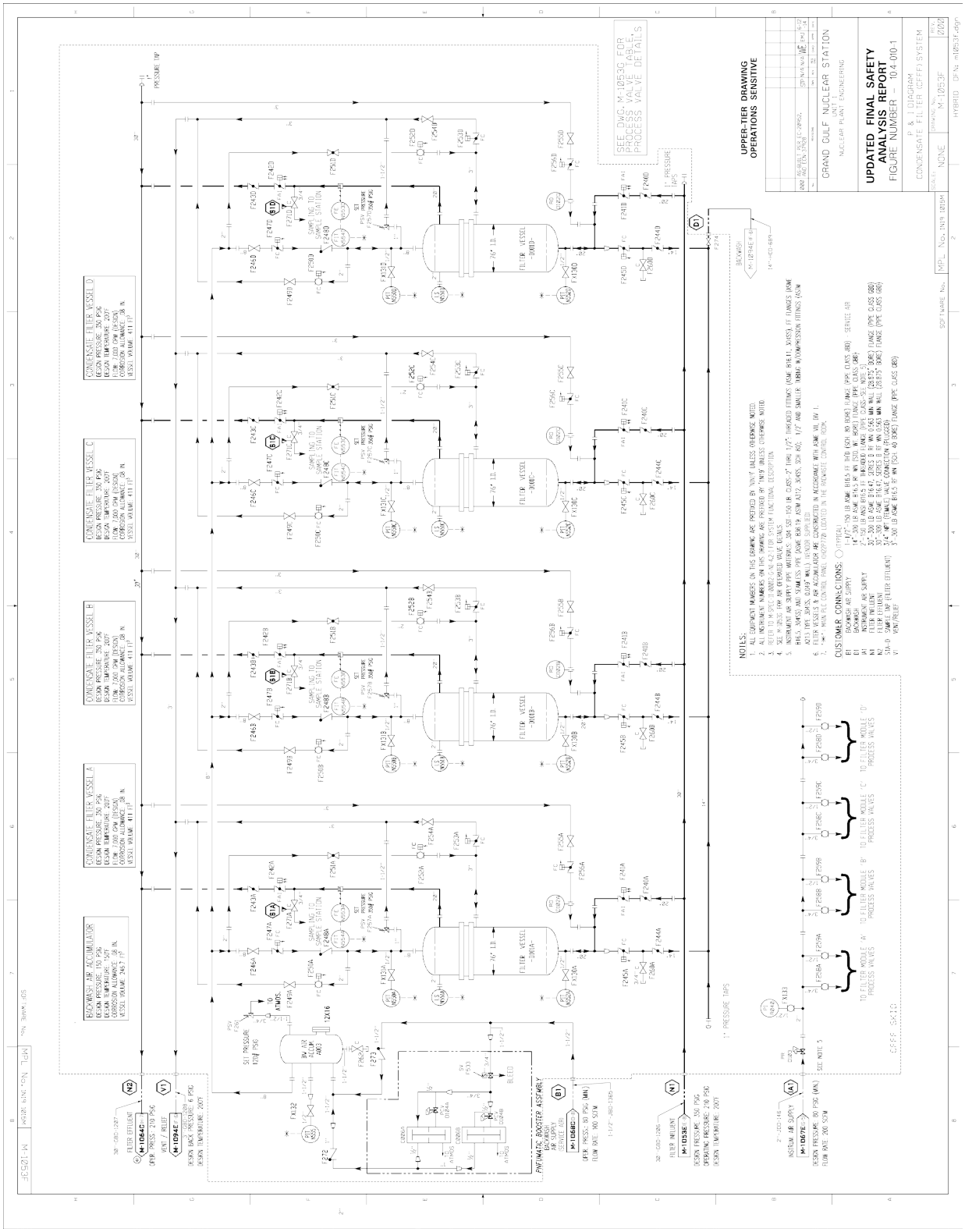
UPPER-TIER DRAWING
OPERATIONS SENSITIVE
UPDATED FINAL SAFETY
ANALYSIS REPORT
FIGURE NUMBER – 10.4-10-1
GRAND GULF NUCLEAR STATION
NUCLEAR PLANT ENGINEERING
P & I DIAGRAM
CONDENSATE FILTER (CFF) SYSTEM
M-1053F
NONE
SEE DWG. M-1053G FOR
PROCESS VALVE DETAILS
NOTES:
CUSTOMER CONNECTIONS:
FILTER VESSEL A
FILTER VESSEL B
FILTER VESSEL C
FILTER VESSEL D
BACKWASH AIR ACCUMULATOR
PNEUMATIC BOOSTER ASSEMBLY
TO FILTER MODULE 'A' PROCESS VALVES
TO FILTER MODULE 'B' PROCESS VALVES
TO FILTER MODULE 'C' PROCESS VALVES
TO FILTER MODULE 'D' PROCESS VALVES

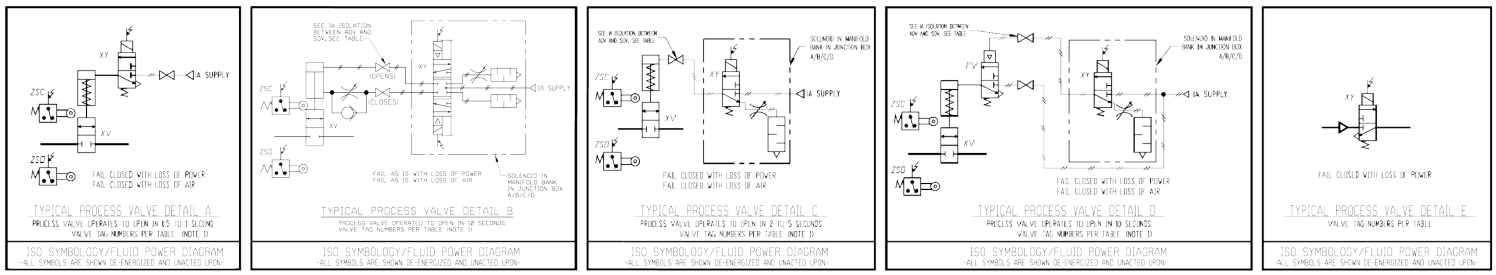

PROCESS VALVE INFORMATION TABLE								INSTRUMENT AIR (IA) VALVES		
ISO DETAIL	PROCESS LOCATION/DESCRIPTION	ADV VALVE TAG NO.	REMOTE MANIFOLD LOCATED SOLENOID TAG NO.	LOCALLY MOUNTED SOLENOID TAG NO.	LOCALLY MOUNTED PILOT VALVE TAG NO.	OPEN LIMIT SWITCH TAG NO.	CLOSED LIMIT SWITCH TAG NO.	IA ISOLATION VALVE TAG NO.	IA ISOLATION BETWEEN ADV AND SOV (IA TO OPEN)	IA ISOLATION BETWEEN ADV AND SOV (IA TO CLOSE)
B	PROCESS INLET VESSEL A	F241A	F525A	–	–	ZS-N560A1	ZS-N560A2	–	F241A1	F241A2
B	PROCESS INLET VESSEL B	F241B	F525B	–	–	ZS-N560B1	ZS-N560B2	–	F241B1	F241B2
B	PROCESS INLET VESSEL C	F241C	F525C	–	–	ZS-N560C1	ZS-N560C2	–	F241C1	F241C2
B	PROCESS INLET VESSEL D	F241D	F525D	–	–	ZS-N560D1	ZS-N560D2	–	F241D1	F241D2
B	PROCESS OUTLET VESSEL A	F242A	F526A	–	–	ZS-N561A1	ZS-N561A2	–	F242A1	F242A2
B	PROCESS OUTLET VESSEL B	F242B	F526B	–	–	ZS-N561B1	ZS-N561B2	–	F242B1	F242B2
B	PROCESS OUTLET VESSEL C	F242C	F526C	–	–	ZS-N561C1	ZS-N561C2	–	F242C1	F242C2
B	PROCESS OUTLET VESSEL D	F242D	F526D	–	–	ZS-N561D1	ZS-N561D2	–	F242D1	F242D2
A	BACKWASH AIR SUPPLY VESSEL A	F247A	–	F527A	–	ZS-N562A1	ZS-N562A2	F247A1	–	–
A	BACKWASH AIR SUPPLY VESSEL B	F247B	–	F527B	–	ZS-N562B1	ZS-N562B2	F247B1	–	–
A	BACKWASH AIR SUPPLY VESSEL C	F247C	–	F527C	–	ZS-N562C1	ZS-N562C2	F247C1	–	–
A	BACKWASH AIR SUPPLY VESSEL D	F247D	–	F527D	–	ZS-N562D1	ZS-N562D2	F247D1	–	–
D	BACKWASH DRAIN VESSEL A	F245A	F528A	–	F709A	ZS-N563A1	ZS-N563A2	F245A1 & F245A2	–	–
D	BACKWASH DRAIN VESSEL B	F245B	F528B	–	F709B	ZS-N563B1	ZS-N563B2	F245B1 & F245B2	–	–
D	BACKWASH DRAIN VESSEL C	F245C	F528C	–	F709C	ZS-N563C1	ZS-N563C2	F245C1 & F245C2	–	–
D	BACKWASH DRAIN VESSEL D	F245D	F528D	–	F709D	ZS-N563D1	ZS-N563D2	F245D1 & F245D2	–	–
C	BACKWASH FILL VESSEL A	F256A	F529A	–	–	ZS-N564A1	ZS-N564A2	F256A1	–	–
C	BACKWASH FILL VESSEL B	F256B	F529B	–	–	ZS-N564B1	ZS-N564B2	F256B1	–	–
C	BACKWASH FILL VESSEL C	F256C	F529C	–	–	ZS-N564C1	ZS-N564C2	F256C1	–	–
C	BACKWASH FILL VESSEL D	F256D	F529D	–	–	ZS-N564D1	ZS-N564D2	F256D1	–	–
C	BONNET VENT VESSEL A	F250A	F530A	–	–	ZS-N565A1	ZS-N565A2	F250A1	–	–
C	BONNET VENT VESSEL B	F250B	F530B	–	–	ZS-N565B1	ZS-N565B2	F250B1	–	–
C	BONNET VENT VESSEL C	F250C	F530C	–	–	ZS-N565C1	ZS-N565C2	F250C1	–	–
C	BONNET VENT VESSEL D	F250D	F530D	–	–	ZS-N565D1	ZS-N565D2	F250D1	–	–
C	PACKING AIR VESSEL A	F252A	F531A	–	–	ZS-N566A1	ZS-N566A2	F252A1	–	–
C	PACKING AIR VESSEL B	F252B	F531B	–	–	ZS-N566B1	ZS-N566B2	F252B1	–	–
C	PACKING AIR VESSEL C	F252C	F531C	–	–	ZS-N566C1	ZS-N566C2	F252C1	–	–
C	PACKING AIR VESSEL D	F252D	F531D	–	–	ZS-N566D1	ZS-N566D2	F252D1	–	–
C	LOWER VENT VESSEL A	F253A	F532A	–	–	ZS-N567A1	ZS-N567A2	F253A1	–	–
C	LOWER VENT VESSEL B	F253B	F532B	–	–	ZS-N567B1	ZS-N567B2	F253B1	–	–
C	LOWER VENT VESSEL C	F253C	F532C	–	–	ZS-N567C1	ZS-N567C2	F253C1	–	–
C	LOWER VENT VESSEL D	F253D	F532D	–	–	ZS-N567D1	ZS-N567D2	F253D1	–	–
E	BACKWASH AIR SUPPLY (BOOSTER)	–	–	F533	–	–	–	–	–	–

NOTES:

1. STROKE TIMES ARE FOR INFORMATION ONLY AND ARE NOT TO BE USED FOR OVERALL LOOP STROKE TIME. PMTP ONLY REQUIRES THESE TO BE FUNCTIONAL.

SEE DWG. M-1053F FOR OVERALL SYSTEM.

UPPER-TIER DRAWING
OPERATIONS SENSITIVE

No.	REVISIONS	DWN	REV	CHKD	APPD	DATE
002	AS-BUILT PER EC 70532	WE	N/A	N/A	SP	EMJ 3-30-17
001	AS-BUILT PER EC 65876	WE	N/A	N/A	SP	EMJ 7-28-16
000	AS-BUILT PER EC-20952, AND ECN-36286	SP	N/A	N/A	WE	EMJ 6-12-14

GRAND GULF NUCLEAR STATION
UNIT 1
NUCLEAR PLANT ENGINEERING

UPDATED FINAL SAFETY ANALYSIS REPORT
FIGURE NUMBER – 10.4-010-2

P & I DIAGRAM
CONDENSATE FILTER (CFFF) SYSTEM

SOFTWARE No. MPL No. 1N19 1015M | SCALE: NONE | DRAWING No. M-1053G | REV. 002

HYBRID DEN: m1053g.dgn

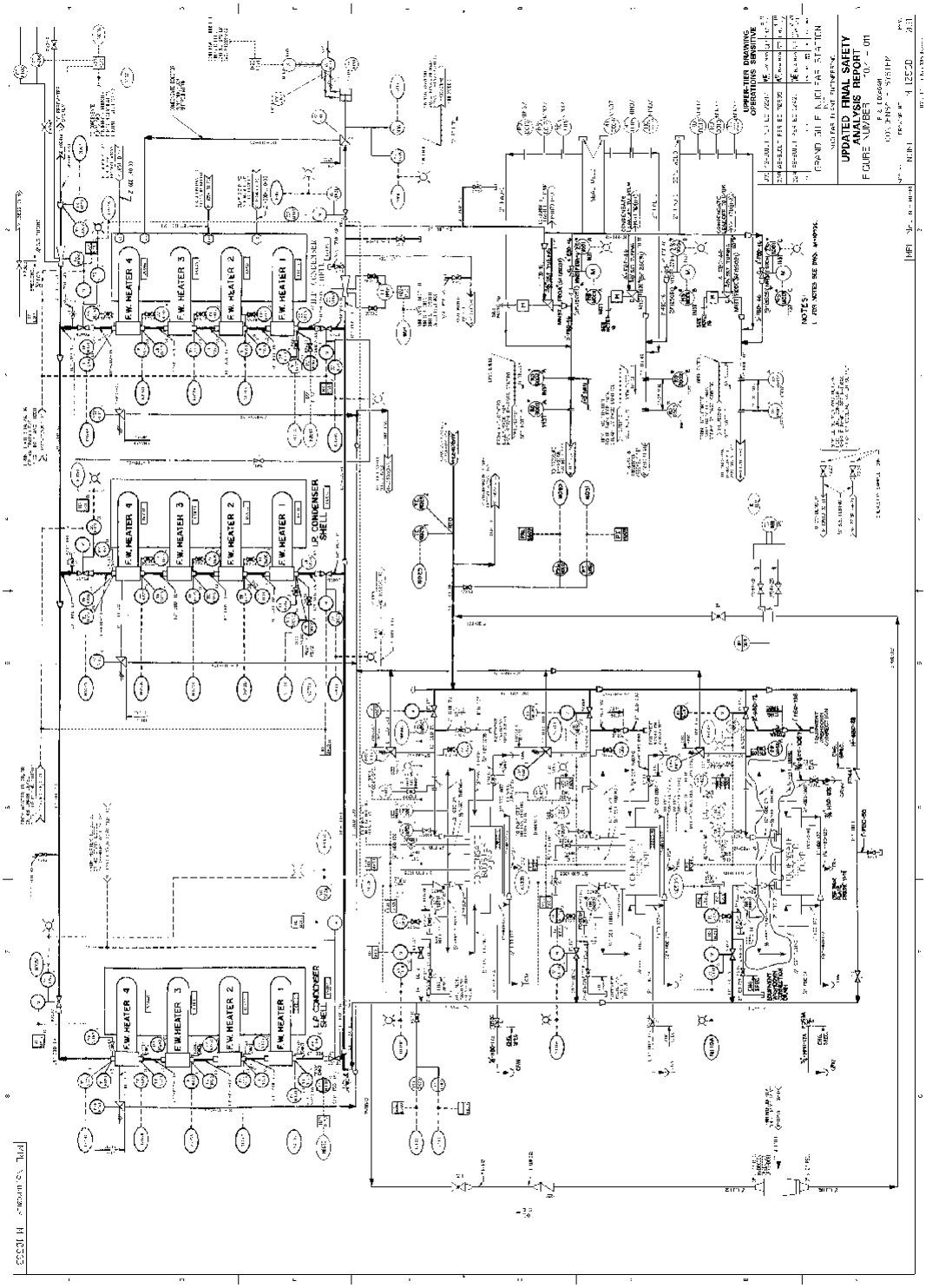
F.W. HEATER 4
F.W. HEATER 3
F.W. HEATER 2
F.W. HEATER 1
L.P. CONDENSER SHELL
UPPER-TIER DRAWING OPERATIONS SENSITIVE
UPDATED FINAL SAFETY ANALYSIS REPORT
FIGURE 10.4-1
GRAND GULF NUCLEAR STATION
NOTES:

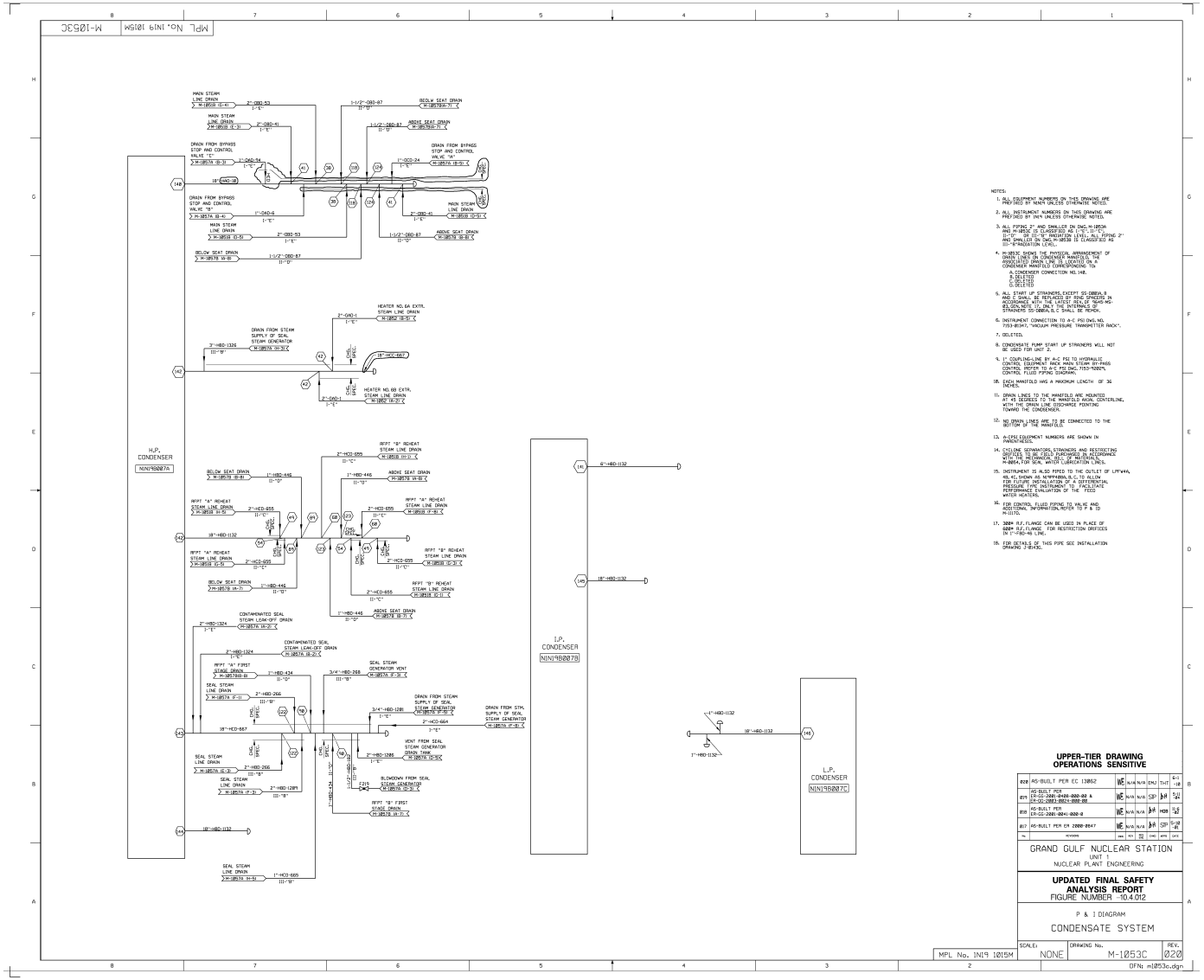
MPL No. 1N19 1015M M-1053C
H.P. CONDENSER
N1N19B007A
I.P. CONDENSER
N1N19B007B
L.P. CONDENSER
N1N19B007C
NOTES:
UPPER-TIER DRAWING
OPERATIONS SENSITIVE
GRAND GULF NUCLEAR STATION
UNIT 1
NUCLEAR PLANT ENGINEERING
UPDATED FINAL SAFETY
ANALYSIS REPORT
FIGURE NUMBER -10.4.012
P & I DIAGRAM
CONDENSATE SYSTEM
SCALE: NONE
DRAWING No. M-1053C
REV. 020
DFN: m1053c.dgn

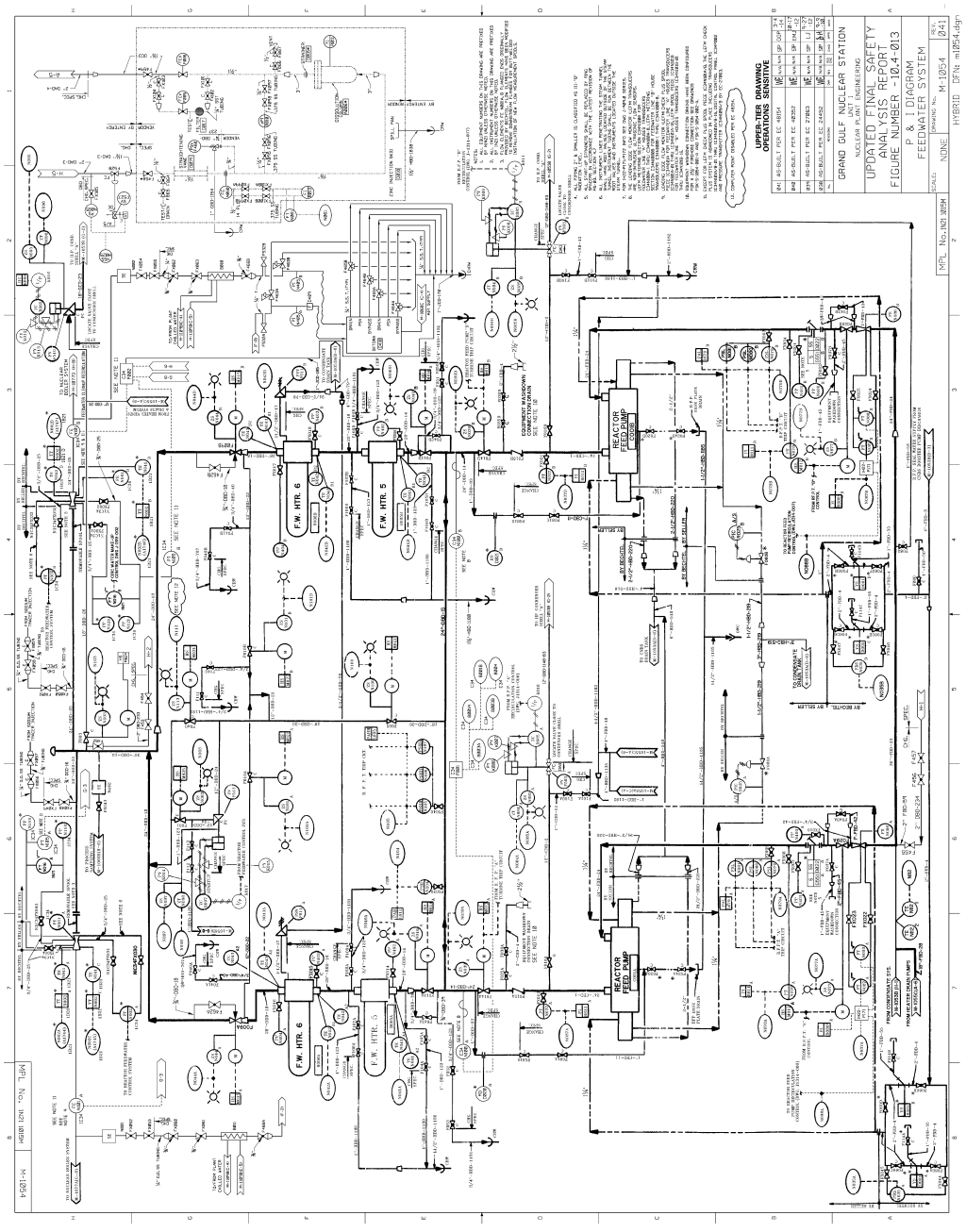
GRAND GULF NUCLEAR STATION
UNIT 1
NUCLEAR PLANT ENGINEERING
UPDATED FINAL SAFETY ANALYSIS REPORT
FIGURE NUMBER 10.4-13
FEEDWATER SYSTEM
P & I DIAGRAM
M-1054
041
HYBRID DFN: m1054.dgn
REACTOR FEED PUMP
F.W. HTR. 6
F.W. HTR. 5

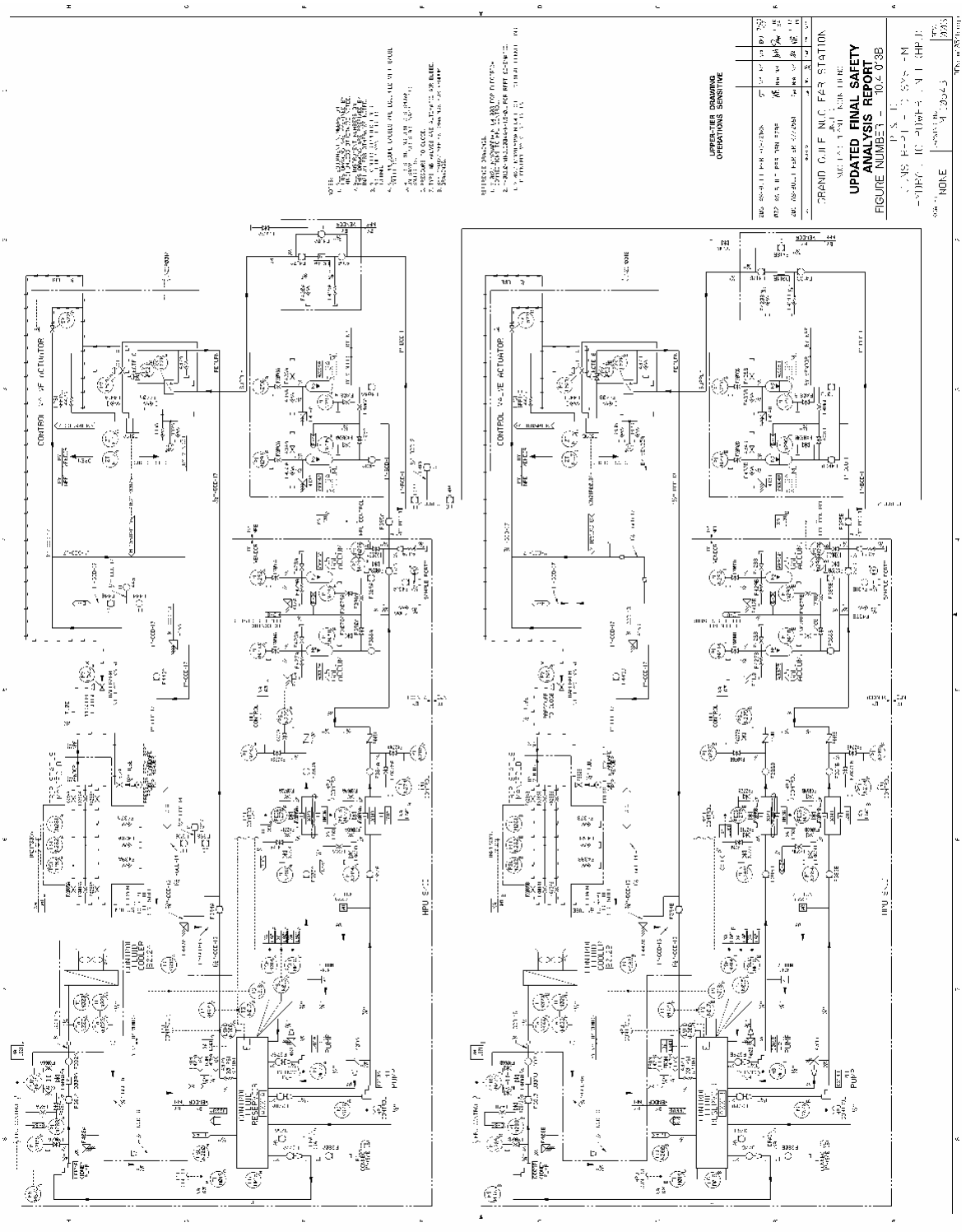
UPPER-TIER DRAWING
OPERATIONS SENSITIVE
GRAND GULF NUCLEAR STATION
UPDATED FINAL SAFETY
ANALYSIS REPORT
FIGURE NUMBER - 10.4-93B
CONTROL VALVE ACTUATOR
CONTROL VALVE ACTUATOR
HPU SKID
HPU SKID
PUMP
PUMP

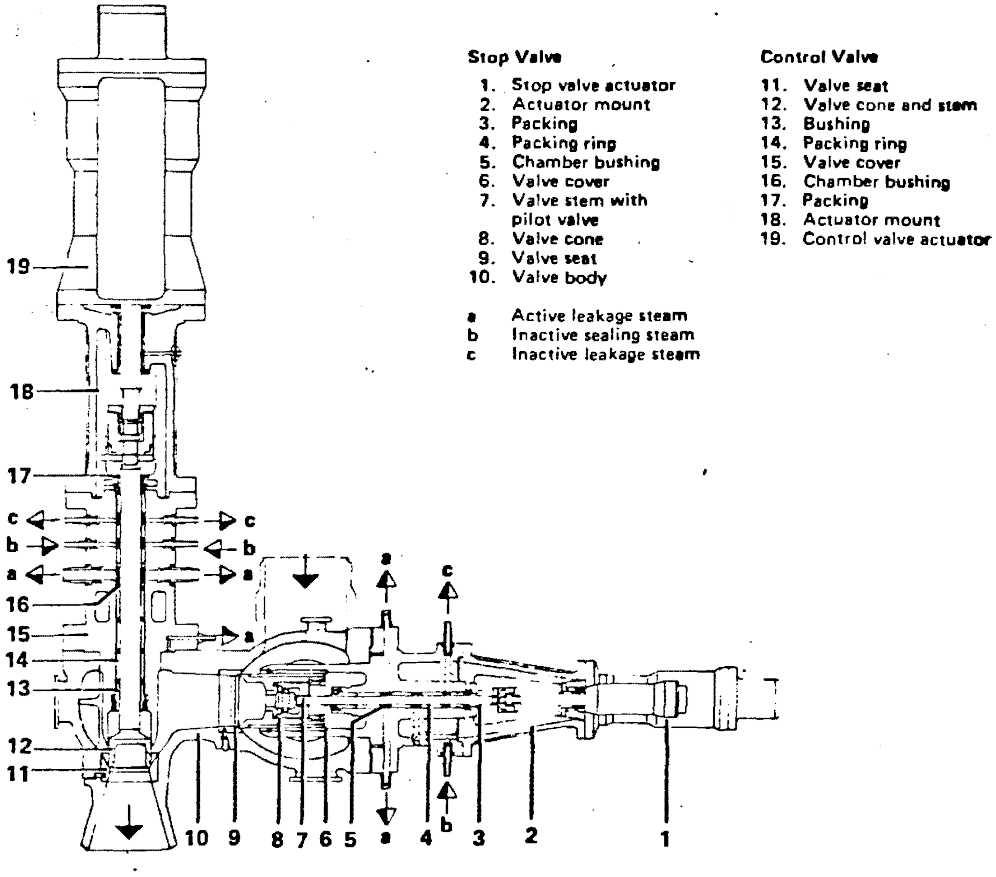

MISSISSIPPI POWER & LIGHT COMPANY GRAND GULF NUCLEAR STATION UNITS 1 & 2 UPDATED FINAL SAFETY ANALYSIS REPORT
BYPASS STOP AND CONTROL VALVE FIGURE 10.4-14

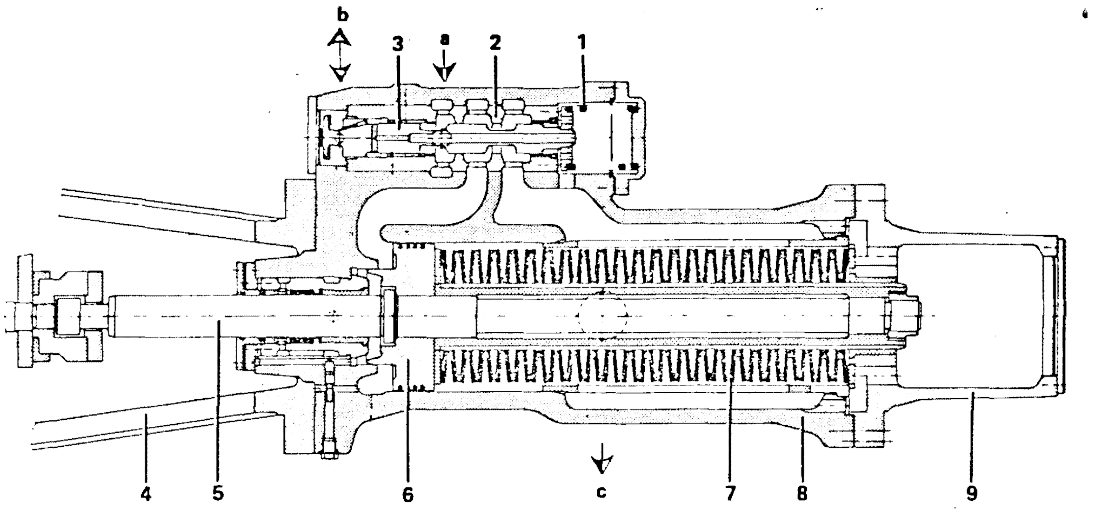

1. Spring
2. Valve bushing
3. Pilot valve
4. Actuator mount
5. Actuator rod
6. Piston
7. Disc spring
8. Casing
9. Hood

a Control fluid (455 psig, unfiltered)
b Bypass starting fluid
c Fluid drain

MISSISSIPPI POWER & LIGHT COMPANY GRAND GULF NUCLEAR STATION UNITS 1 & 2 UPDATED FINAL SAFETY ANALYSIS REPORT
BYPASS STOP VALVE ACTUATOR FIGURE 10.4-15

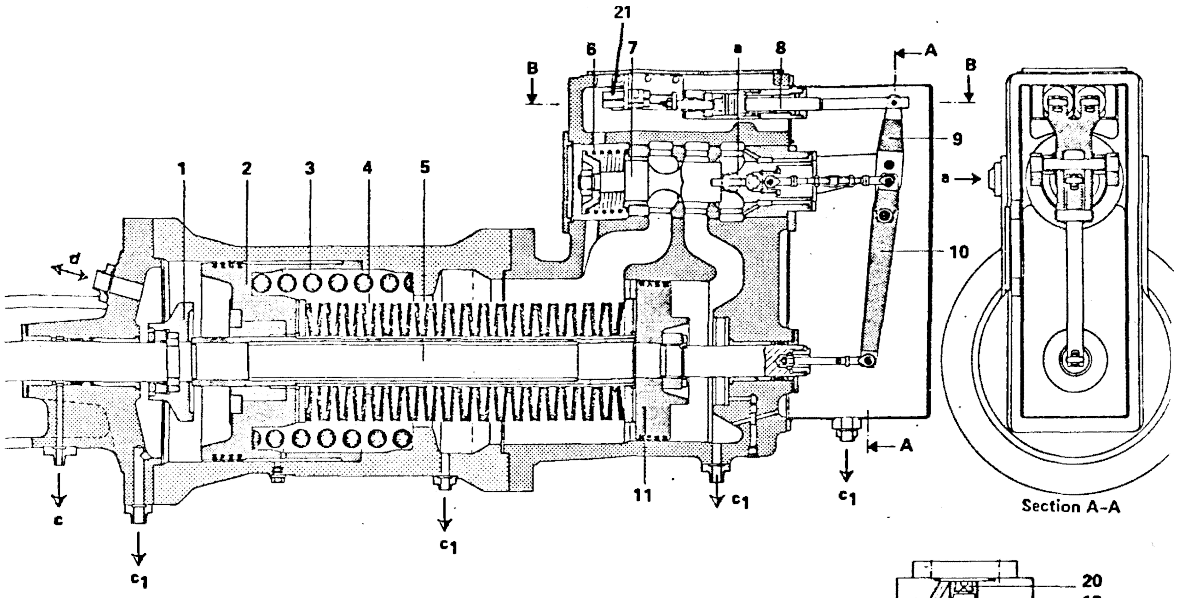

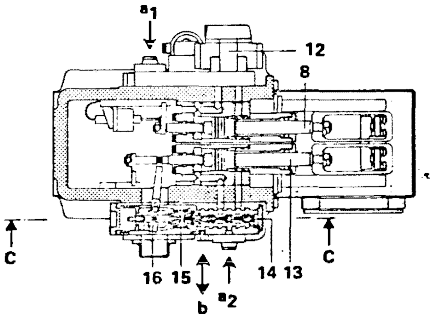

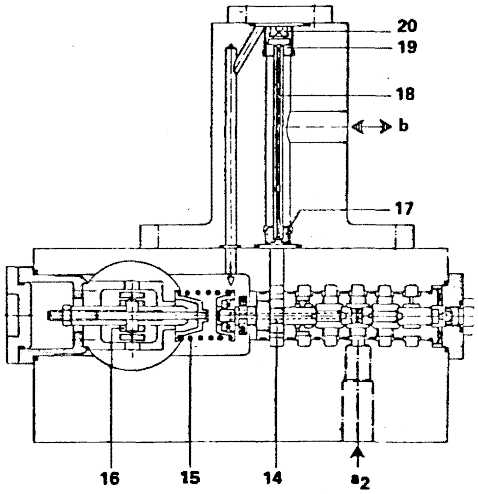

1. Limiting disc
2. Piston
3. Helical spring
4. Disc spring
5. Actuator piston rod
6. Compression spring
7. Main pilot valve
8. Pilot piston
9. Lever
10. Lever
11. Piston
12. Servovalve
13. Pilot piston
14. Auxiliary pilot valve
15. Spring
16. Feedback lever
17. Screw plug
18. Capillary tube
19. Threaded insert
20. Screw plug
21. Diff. Transformer

a Control fluid 455 psig (unfiltered)
a_1 Control fluid 455 psig (filtered)
a_2 Control fluid 455 psig (filtered)
b Bypass signal fluid
c Return fluid
d Bypass start-up fluid
c_1 Fluid drain

MISSISSIPPI POWER & LIGHT COMPANY
GRAND GULF NUCLEAR STATION
UNITS 1 & 2
UPDATED FINAL SAFETY ANALYSIS REPORT

BYPASS CONTROL VALVE ACTUATOR

FIGURE 10.4-16

APPENDIX 10A

The information originally contained in this appendix was provided by Allis-Chalmers Power Systems, Inc. and addressed turbine disc integrity and turbine missile analyses. That information was revised primarily as a result of upgrading the three low pressure turbines during RFO8, RFO9, and RFO10 by Siemens Power Corporation as discussed in Reference 7 of Section 10.2.3.8. In response, the NRC granted deletion of License Condition 2.C. (26) as documented in Reference 12 of Section 10.2.3.8. The analyses are maintained as separate controlled documents due to the contents being classified as proprietary information. The missile analyses are available for review and inspection at the site. See reference section 10.2.3.8 for specific missile analyses.