INDUSTRIAL NUCLEAR CO., INC.

December 18, 2020

Document Control Desk
Director, Spent Fuel Project Office
Office of Nuclear Material Safety and Safeguards
US Nuclear Regulatory Commission
Washington, DC 20555-001

SUBJECT: Application for Certificate of Compliance for the Industrial Nuclear Company Outer Pack-Raw Material Shipping Container, Revision 0, Docket 71-9387

Dear Sir/Madam:

Industrial Nuclear Company (INC) hereby submits this application for a Certificate of Compliance (C of C) for the INC Outer Pack-Raw Material Shipping Container (OP-RMSC) package. Enclosed is one electronic copy of the Safety Analysis Report (SAR). The enclosed SAR includes all test data and analyses for the certification of this shipping container package as required by Title 10, Energy, Code of Federal Regulations, Part 71 (10 CFR 71), *Packaging and Transportation of Radioactive Material, 1-1-2018 Edition.*

The OP-RMSC is INC's first shipping container to contain no Depleted Uranium for shielding, and is used to transport bulk raw materials from material irradiation services to the manufacturer for processing.

Please contact Mike Rose at 510.352.6766 if you have any questions.

Sincerely,

Mike Rose, QA Manager/AR-SO
Industrial Nuclear Company

CC: William Allen

☐ 14320 Wicks Blvd., San Leandro, CA 94577 Tel: (510) 352-6767 Fax: (510) 352-6772
☐ 3E NDT, LLC 300 Hwy 146N, La Porte, TX 77571 Tel: (281) 470-2010 Fax: (281) 470-2024
www. ir100.com

SAFETY ANALYSIS REPORT

OUTER PACKAGE–RAW MATERIAL SHIPPING CONTAINER

Docket No. 71-9387
Revision 0
December 2020

Industrial Nuclear Company, Inc.
14320 Wicks Blvd.
San Leandro, California 94577
(510) 352-6767

TABLE OF CONTENTS

1.0 General Information 1
1.1 Introduction 1
1.2 Package Description 1
1.2.1 Packaging 1
1.2.2 Contents of Packaging 1
1.2.3 Special Requirements for Plutonium 2
1.2.4 Operational Features 2
1.3 Appendices 5
1.3.1 General Arrangement Drawings 5
2.0 Structural Evaluation 13
2.1 Description of Structural Design 13
2.1.1 Discussion 13
2.1.2 Design Criteria 16
2.1.3 Weights and Center of Gravity 17
2.1.4 Identification of Codes and Standards for Package Design 17
2.2 Materials 17
2.2.1 Material Properties and Specifications 17
2.2.2 Chemical, Galvanic, or Other Reactions 19
2.2.3 Effects of Radiation on Materials 19
2.3 Fabrication and Examination 19
2.3.1 Fabrication 19
2.3.2 Examination 19
2.4 General Requirements for All Packages 19
2.4.1 Minimum Package Size 19
2.4.2 Tamper Indicating Device 20
2.4.3 Positive Closure 20
2.4.4 Valves 20
2.4.5 Package Design 20
2.4.6 External Temperatures 20
2.4.7 Venting 20
2.5 Lifting and Tie-down Devices for All Packages 20

2.5.1 Lifting Devices 20
2.5.2 Tie-Down Devices 21
2.6 Normal Conditions of Transport 21
2.6.1 Heat 21
2.6.2 Cold 21
2.6.3 Reduced External Pressure 22
2.6.4 Increased External Pressure 22
2.6.5 Vibration 22
2.6.6 Water Spray 22
2.6.7 Free Drop 22
2.6.8 Corner Drop 22
2.6.9 Compression 22
2.6.10 Penetration 23
2.7 Hypothetical Accident Conditions 23
2.7.1 Free Drop 24
2.7.2 Crush 24
2.7.3 Puncture 25
2.7.4 Thermal 26
2.7.5 Immersion – Fissile Material 26
2.7.6 Immersion – All Packages 26
2.7.7 Deep Water Immersion Test (for Type B Packages Containing More than 10^5 A_2) 26
2.7.8 Summary of Damage 26
2.8 Accident Conditions for Air Transport of Plutonium 28
2.9 Accident Conditions for Fissile Material Packages for Air Transport 28
2.10 Special Form 28
2.11 Fuel Rods 28
2.12 Appendix 29
2.12.1 Certification Tests 29
2.12.1 Certification Tests 30
3.0 Thermal Evaluation 59
3.1 Description of Thermal Design 59
3.1.1 Design Features 59
3.1.2 Content's Decay Heat 59

3.1.3 Summary Tables of Temperatures 59
3.1.4 Summary Tables of Maximum Pressures 59
3.2 Material Properties and Component Specifications 59
3.2.1 Material Properties 59
3.2.2 Component Specifications 60
3.3 Thermal Evaluation under Normal Conditions of Transport 60
3.3.1 Heat and Cold 60
3.3.2 Maximum Normal Operating Pressure 64
3.4 Thermal Evaluation under Hypothetical Accident Conditions 64
3.4.1 Initial Conditions 64
3.4.2 Fire Test Conditions 65
3.4.3 Maximum Temperatures and Pressures 65
3.4.4 Maximum Thermal Stresses 65
3.4.5 Accident Conditions for Fissile Material Packages for Air Transport 65
3.5 Appendix 66
3.5.1 Sample of ANSYS® Input Files 66
4.0 Containment 76
5.0 Shielding Evaluation 77
5.1 Description of Shielding Design 77
5.1.1 Design Features 77
5.1.2 Summary Table of Maximum Radiation Levels 77
5.2 Source Specification 78
5.2.1 Gamma Source 78
5.2.1 Neutron Source 78
5.3 Shielding Model 79
5.3.1 Configuration of Source and Shielding 79
5.3.2 Material Properties 81
5.4 Shielding Evaluation 81
5.4.1 Methods 81
5.4.2 Input and Output Data 82
5.4.3 Flux-to-Dose-Rate Conversions 82
5.4.4 External Radiation Levels 83
5.5 Appendix 85

5.5.1 Sample MCNP Input File (RMSC_Co60_up.i) 85
6.0 Criticality Evaluation 92
7.0 Package Operations 93
7.1 Package Loading 93
7.1.1 Preparation of the OP-RMSC for Loading 93
7.1.2 Loading the Special Form Contents into the RMSC 93
7.1.3 Preparation for Transport 93
7.2 Package Unloading 94
7.2.1 Receipt of OP-RMSC Package from Carrier 94
7.2.2 Removal of Special Form Contents from the RMSC 94
7.3 Preparation of Empty OP-RMSC Package for Transport 95
8.0 Acceptance Tests and Maintenance Program 96
8.1 Acceptance Tests 96
8.1.1 Visual Inspections and Measurements 96
8.1.2 Weld Examinations 96
8.1.3 Structural and Pressure Tests 96
8.1.4 Leakage Tests 96
8.1.5 Component and Material Tests 96
8.1.6 Shielding Tests 96
8.1.7 Thermal Tests 96
8.1.8 Miscellaneous Tests 96
8.2 Maintenance Program 97
8.2.1 Structural and Pressure Tests 97
8.2.2 Leakage Tests 97
8.2.3 Component and Material Tests 97
8.2.4 Thermal Tests 97
8.2.5 Miscellaneous Tests – Shielding 97

1.0 GENERAL INFORMATION

This chapter of the Outer Package, Raw Material Shipping Container (hereto referred to as the OP-RMSC) Safety Analysis Report presents a general introduction and description of the OP-RMSC package. A detailed description of the major packaging and payload components is presented in the following sections. Detailed drawings are presented in Appendix 1.3.1, *General Arrangement Drawings*.

1.1 Introduction

The OP-RMSC package is a transportation package designed to transport the Raw Material Shipping Container (RMSC) raw material special form capsules containing either cobalt-60 (Co-60), iridium-192 (Ir-192), or selenium-75 (Se-75) radioactive material. The RMSC will carry up to four (4) special forma capsules that contain the radioactive material. The design is optimized to provide maximum safety during both operations and transport conditions. Both the OP-RMSC and the RMSC consist of a welded cylindrical shell with bolted closure lids. Since the OP-RMSC package does not possess the primary gamma shielding, only the RMSC payload, which utilizes tungsten gamma shields, is relied upon for performing the shielding safety function. Therefore, no shielding credit is assigned to the OP-RMSC package itself.

Authorization is sought for shipment of raw material special form source capsules containing Co-60, Ir-192, or Se-75 isotopes as a Type B(U)-96, special form material package per the definitions delineated in 10 CFR §71.4[1]. The transport index (TI) for the package, determined in accordance with the definition of 10 CFR §71.4, is determined for each shipment. The TI is based on the radiation dose rate at 1 meter (3.3 feet) from the external surface of the package (method for the transport index is defined in Chapter 7.0, *Package Operations*).

1.2 Package Description

1.2.1 Packaging

The OP-RMSC is a Type B(U)-96 package designed for transportation of only special form radioactive materials, which are contained in the RMSC payload. The maximum gross weight of the package is 650 pounds, and its primary components of construction are identified in Figure 1.2-1 and Figure 1.2-2. The radioactive payloads in the RMSC are raw material special form capsules, and are described in Section 1.2.2, *Contents of Packaging*. Primary shielding is provided by tungsten shields in the RMSC payload, which is illustrated in Figure 1.2-3. The tungsten shields are machined solid form castings, and are illustrated in Figure 1.2-4. Detailed drawings of the OP-RMSC packaging are provided in Appendix 1.3.1, *General Arrangement Drawings*.

1.2.2 Contents of Packaging

The OP-RMSC is designed to transport the RMSC payload. The RMSC is designed to carry up to four (4) raw material special form capsules, each containing a maximum of 4,000 Ci (173 TBq) of Ir-192, or 4,000 Ci (173 TBq) of Se-75. The maximum radioactive content of Co-60 per shipment

[1] Title 10, Code of Federal Regulations, Part 71 (10 CFR 71), *Packaging and Transportation of Radioactive Material*, 1-1-20 Edition.

is limited to 2 Ci (0.07 TBq). For the total four raw material special form capsules, the maximum radioactive content for the OP-RMSC package is 16,000 Ci (592 TBq).

The maximum decay heat for the OP-RMSC package is 100 W (341 Btu/hr).

1.2.3 Special Requirements for Plutonium

This section does not apply, since plutonium is not transported in the OP-RMSC package.

1.2.4 Operational Features

There are no operationally complex features of the OP-RMSC package. The radioactive material contents (described in Section 1.2.2, *Contents of Packaging*) are confined in special form capsules that are within the RMSC cavity, which is surrounded by tungsten gamma shields. The gamma shields are contained in a welded pipe with a bolted closure lid, as shown in Figure 1.2-4. The RMSC payload is then placed in the OP-RMSC payload cavity and a separate inner closure lid is installed and secured utilizing eight (8) 1/2-13 UNC hex bolts, as shown in Figure 1.2-2. A vented outer closure lid is then secured to the OP-RMSC body by eight (8) 1/2-13 UNC hex bolts. The OP-RMSC package outer closure lid is fitted with a 3/8-16 UNC threaded hole to attach a standard lifting device to facilitate handling. Sequential steps of operation are provided in Chapter 7.0, *Package Operations*.

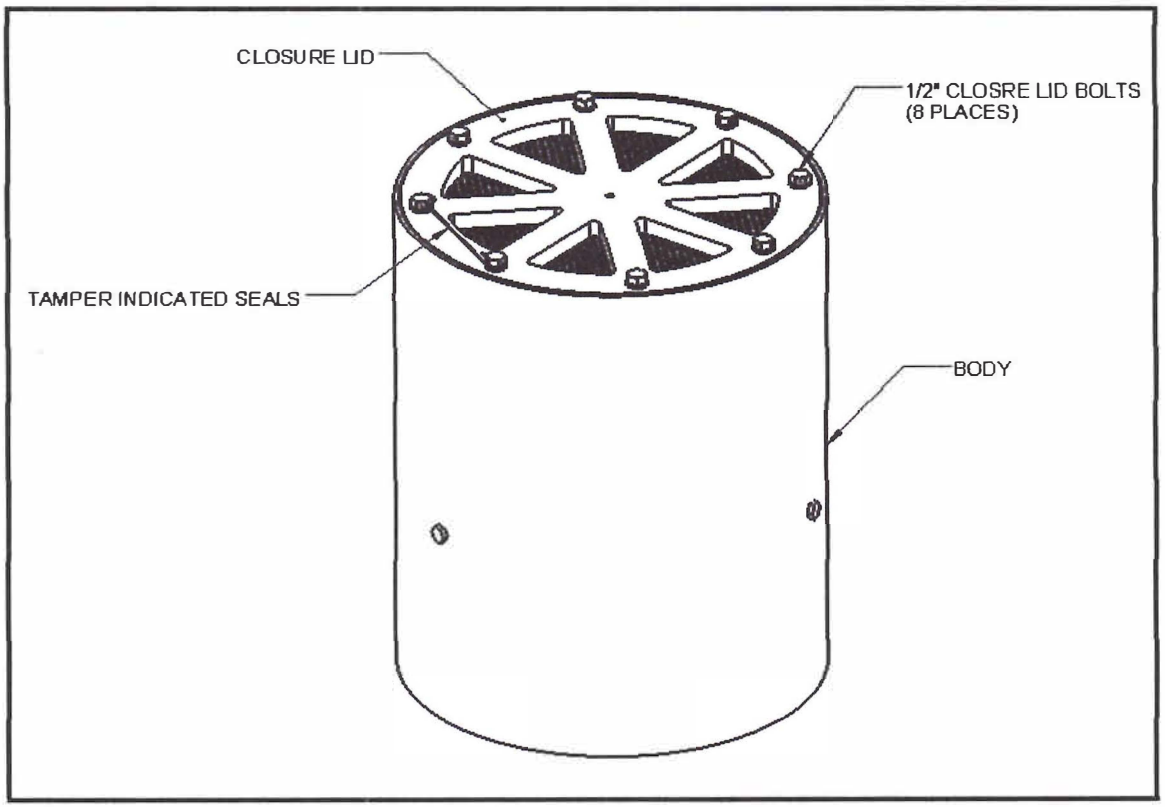

Figure 1.2-1 – Isometric View of the OP-RMSC Packaging

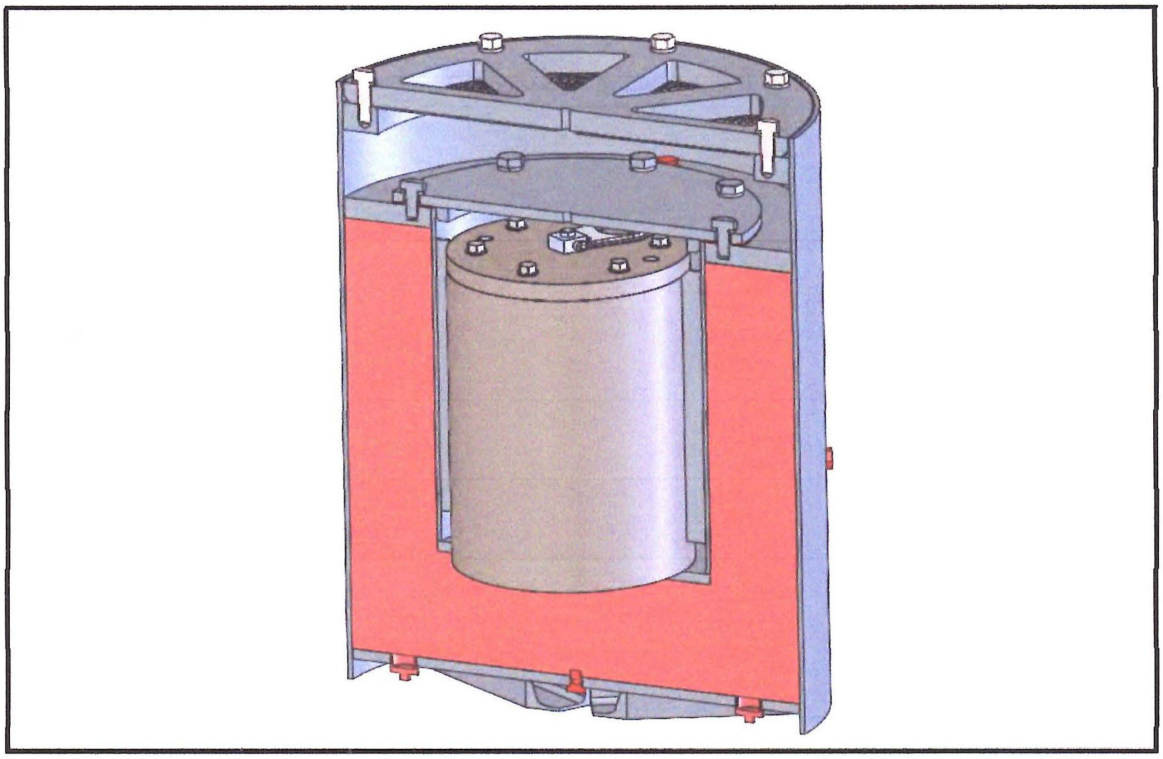

Figure 1.2-2 – Sectional View of the OP-RMSC Packaging

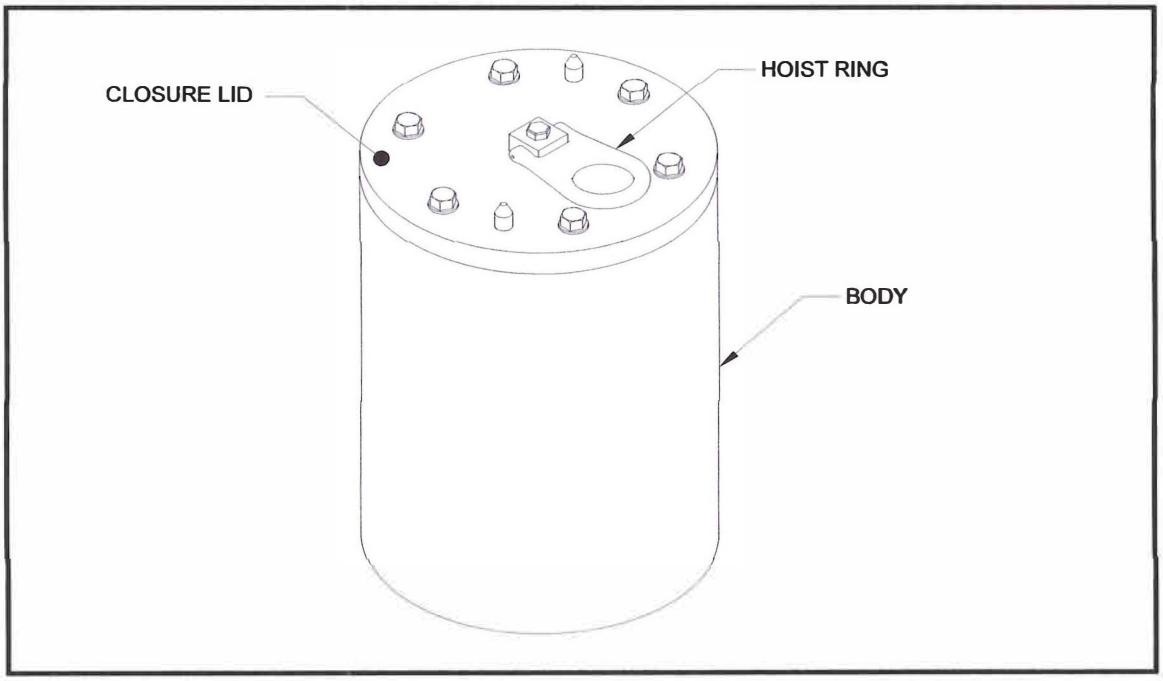

Figure 1.2-3 – Isometric View of the RMSC Payload

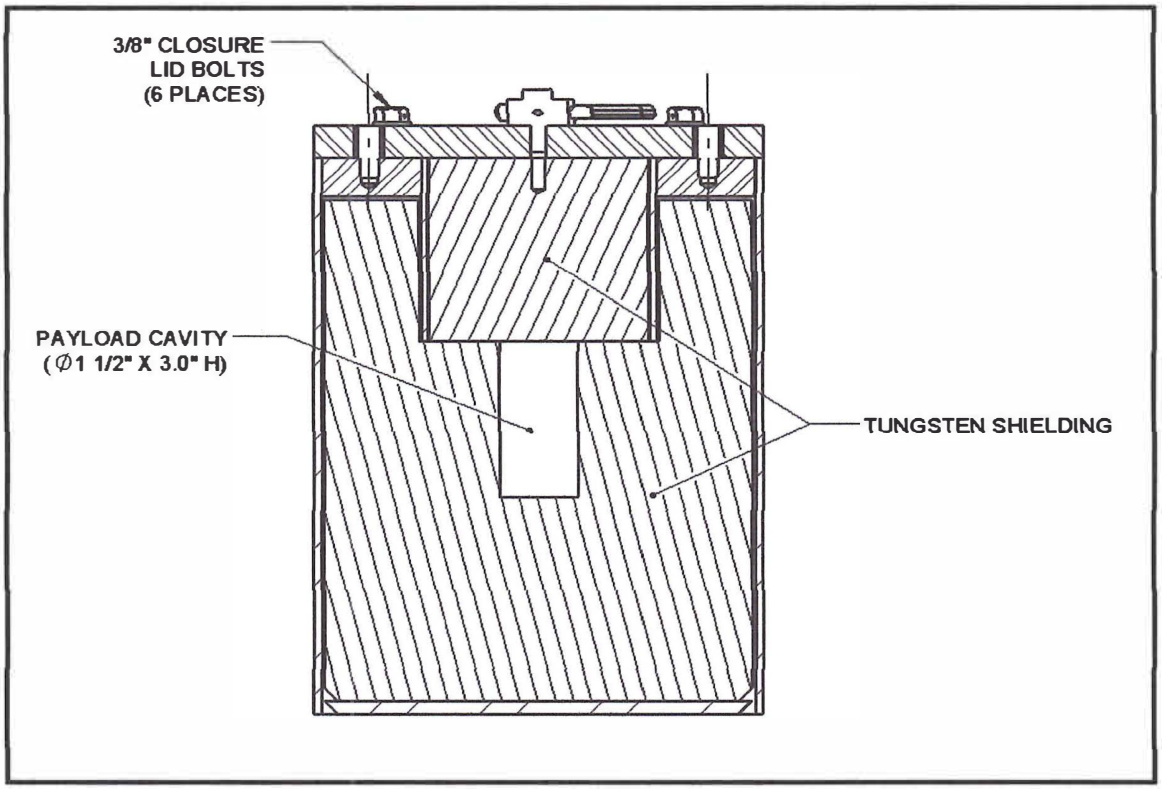

Figure 1.2-4 – Sectional View of the RMSC Payload

1.3 *Appendices*

1.3.1 General Arrangement Drawings

Drawings Withheld per 10 CFR 2.390

2.0 STRUCTURAL EVALUATION

This chapter presents the structural design criteria, weights, mechanical properties of material, and structural evaluations that demonstrate that the Outer Package, Raw Material Shipping Container (OP-RMSC) package meets all applicable structural criteria for transportation as defined in 10 CFR 71[2].

2.1 Description of Structural Design

The primary evaluation of the OP-RMSC package is performed with various full-scale tests. The results of the tests are provided in the following sections. Analyses of non-tested structural aspects are also provided.

The OP-RMSC package consists of four major fabricated components: 1) a welded, outer stainless steel pipe assembly that is welded to an inner stainless steel pipe, which forms the payload cavity, 2) a bolted vented closure lid that is secured to the outer pipe, 3) a bolted inner closure lid that covers the payload cavity, and 4) polyurethane foam between the inner and outer pipes.

The RMSC payload consists of three major fabricated components: 1) a welded stainless steel pipe assembly that is welded to a smaller pipe assembly, which forms the payload cavity, 2) a tungsten shield that covers and shields the payload cavity, 3) a bolted closure lid that covers the cavity tungsten shield, and 4) a fixed tungsten shield between the outer pipe and inner pipe assemblies.

2.1.1 Discussion

The OP-RMSC is a welded and bolted assembly that consists of an outer ∅18-inch × 22¾ inch high, Schedule 10S stainless steel pipe and an inner ∅10-inch × 12¼ inch high, Schedule 10S stainless steel pipe. The inner pipe forms the payload cavity. The annular space between the inner and outer pipes is filled with approximately 32 pounds of rigid polyurethane foam that provides limited impact protection of the payload, which is a RMSC. A 3/8-inch thick, 13¾ inch diameter stainless steel plate, which is secured with eight (8) 1/2-inch hex bolts, encloses the payload cavity. Above the inner lid, a 3/4-inch thick, 17½ inch diameter stainless steel closure lid is secured to the outer 18-inch diameter stainless steel pipe body with eight (8) 1/2-13 UNC hex bolts. The outer lid is slotted to dissipate decay heat from the payload cavity via convective heat transfer. Within the payload cavity, there are four (4) 3/8-inch thick stainless steel vertical bars welded to the inner cavity wall. The bars are circumferentially located at 90-degrees to minimize the clearance between the RMSC payload and the cavity wall. The maximum tare and gross weight of the OP-RMSC package is 270 pounds (122 kg) and 650 pounds (295 kg), respectively, and is illustrated in Figure 2.1-1 and Figure 2.-2.

The RMSC is designed to transport up to 2 Ci (0.07 TBq) of Co-60, or 16,000 Ci (592 TBq) of Ir-192, or Se-75 isotopes in raw material special form capsules. The RMSC payload consists of a welded outer 8-inch diameter Schedule 10S stainless steel pipe that surrounds a tungsten shield that contains a 1½ inch diameter × 3 inch high payload cavity. Above the payload cavity is a 4.2-inch diameter × 3.6 inch high tungsten gamma shield that is placed over the cavity. The closure lid is

[2] Title 10, Code of Federal Regulations, Part 71 (10 CFR 71), *Packaging and Transportation of Radioactive Material*, 1-1-20 Edition.

then placed over the tungsten shield and secured to the body by six (6) hex head bolts. The RMSC payload weighs approximately 380 pounds (172 kg), and is illustrated in Figure 2.1-3.

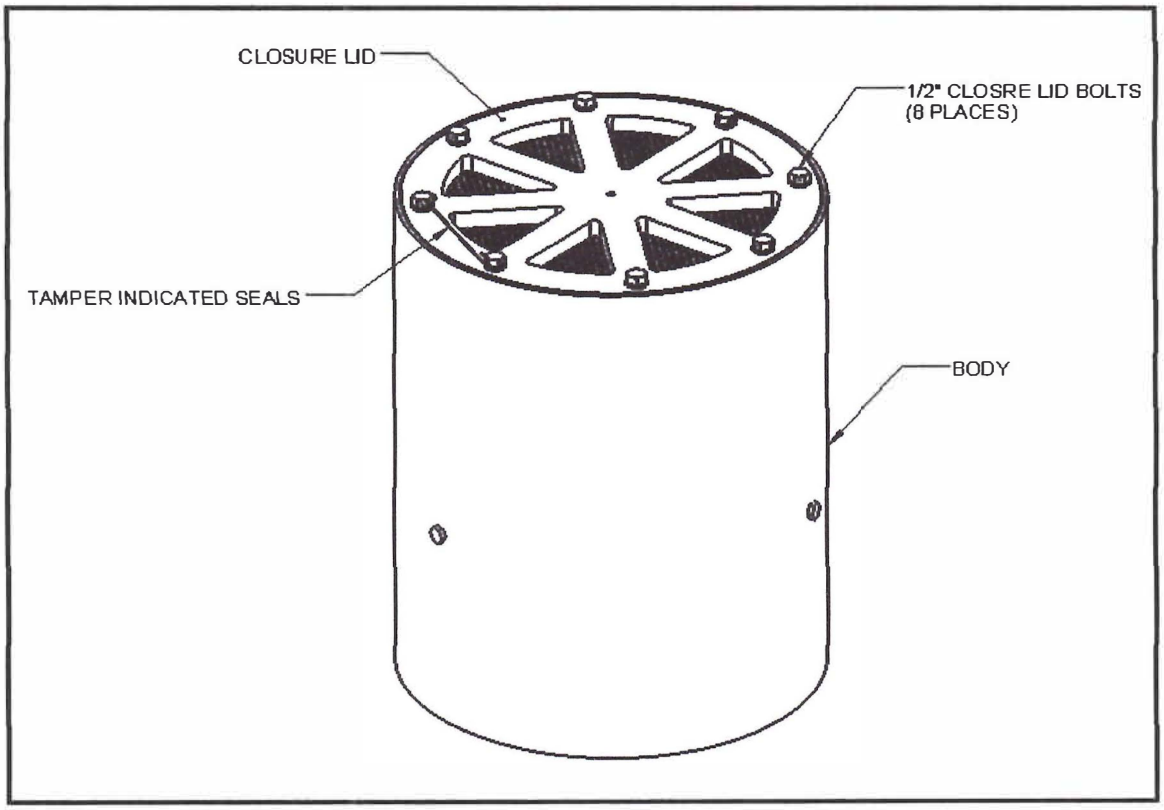

Figure 2.1-1 – Isometric View of the OP-RMSC Packaging

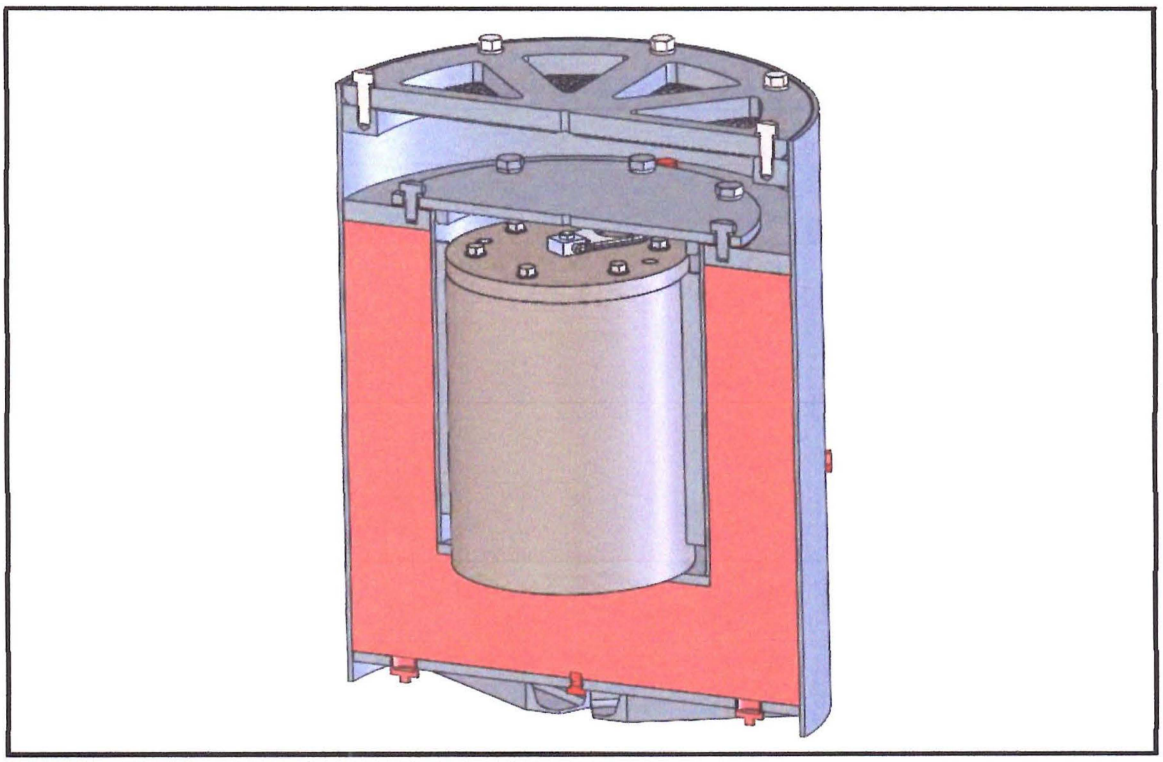

Figure 2.2-2 – Sectional View of the OP-RMSC Packaging

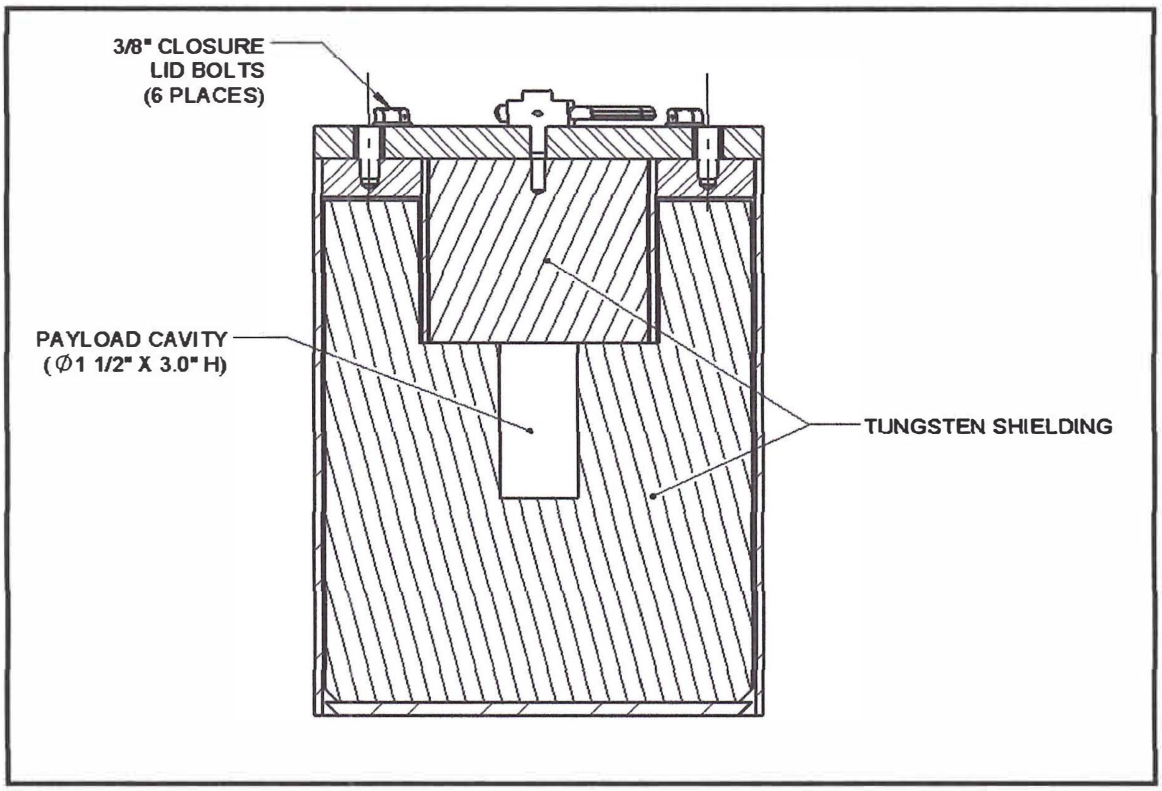

Figure 2.3-3 – Sectional View of the RMSC Payload

2.1.2 Design Criteria

2.1.2.1 Basic Design Criteria

The OP-RMSC package is primarily demonstrated to satisfy the requirements of 10 CFR 71 via full-scale tests. For evaluation of a lifting attachment, the design criteria is that the structural lifting features do not exceed the material's yield strength when subjected to the requirements of 10 CFR §71.45(a).

2.1.2.2 Miscellaneous Structural Failure Modes

2.1.2.2.1 Brittle Fracture

The structural materials of the OP-RMSC packaging include stainless steel and tungsten. Each material is not susceptible to brittle fracture at temperatures as low as -20 °F (-29 °C) as described below.

The OP-RMSC packaging and the RMSC payload are fabricated from austenitic stainless steel pipe, plate, and bar. This material does not undergo a ductile-to-brittle transition in the temperature range of interest [i.e., down to -40 °F (-40 °C)], and thus does not require evaluation for brittle fracture.

The tungsten shield material, which is enclosed by the welded stainless steel pipe assembly, was free drop and puncture tested at temperatures less than –20 °F (-29 °C). As documented in the certification test report[3], the tungsten gamma shields in the RMSC payload passed all the drop tests, which included cumulative damage effects, with no loss of shielding or confinement capability. Based on the low temperature testing of the OP-RMSC package, brittle fracture of the tungsten gamma shields in the RMSC payload is not a concern.

The closure lid bolts are hex bolts fabricated from ASTM A320, Grade L43 or L7 materials. These materials are specifically intended for low-temperature service applications. The Charpy impact tests for this material are recommended to be perform at -150 °F (-101 °C)[4] for these material grades. Therefore, brittle fracture of the closure lid bolts is not a concern.

2.1.2.2.2 Fatigue

Because the OP-RMSC package is an essentially a rigid body, no structural failures of the confinement boundary due to fatigue will occur.

2.1.2.2.3 Buckling

The OP-RMSC package provides only a confinement boundary. For normal condition and hypothetical accident conditions, the RMSC confinement boundary (i.e., the tungsten gamma shields) will not buckle due to free or puncture drops. This conclusion has been demonstrated via full-scale tests of the OP-RMSC package.

2.1.3 Weights and Center of Gravity

The maximum gross weight of the OP-RMSC package is 650 pounds (295 kg). The center of gravity of the assembled package is along the vertical centerline axis, approximately 13.4 inches above the bottom of the package. Because the overall mass is dominated by the tungsten gamma shields, the package center of gravity is near the center of gravity for the RMSC payload.

2.1.4 Identification of Codes and Standards for Package Design

Since the package contains limited quantities of radioactive material, and does not contain a pressure boundary, the OP-RMSC package is only designed to industrial metal fabrication standards.

2.2 Materials

2.2.1 Material Properties and Specifications

Mechanical properties for the materials utilized for the structural components of the OP-RMSC package are provided in this section. Temperature-dependent material properties for the austenitic stainless steel structural components are obtained from Section II, Part D, of the

[3] Orano Federal Services LLC, Document TR-3023626-000, *Certification Test Report for the OP-RMSC Package*, Revision 0, August 17, 2020.

[4] American Society of Testing and Materials (ASTM) International, *Standard Specification for Alloy-Steel and Stainless Steel Bolting Materials for Low-Temperature Service*, A320/A320M-18.

ASME Boiler and Pressure Vessel (B&PV) Code[5]. Since the evaluation of the OP-RMSC package is primarily via full-scale tests, only the material properties that are used in the analysis portion of the evaluation are given. Table 2.2-1 presents the properties of the structural materials for Type 304 stainless steel utilized in the package.

The tungsten gamma shields that are utilized in the RMSC payload are a tungsten heavy alloy, which is 93% - 97% tungsten alloyed with nickel (Ni) and iron (Fe). The addition of the nickel and iron improves the machinability compared to pure tungsten. Typical room temperature properties are provided in Table 2.2-2. Since the tungsten gamma shields are not a primary structural material for the RMSC payload, these typical properties are provided for information only.

Table 2.2-1 – *Type 304 Stainless Steel Material Properties*

Material Specification	Temperature, °F	Yield Strength (S_y), psi ①	Ultimate Strength (S_u), psi ②	Design Stress Intensity (S_m), psi ③	Elastic Modulus, $x10^6$, psi ④	Coefficient of Thermal Expansion, $x10^{-6}$, in/in/°F ⑤
Type 304 Stainless Steel	-40	**30,000**	**75,000**	**20,000**	**28.8**	**8.1**
	-20	30,000	75,000	20,000	**28.7**	**8.2**
	70	30,000	75,000	20,000	28.3	8.5
	100	30,000	75,000	20,000	**28.1**	8.6
	200	25,000	71,000	20,000	27.5	8.9
	300	22,400	66,200	20,000	27.0	9.2
	400	20,700	64,000	18,600	26.4	9.5

Notes:

① ASME B&PV Code, Section II, Part D, Table Y-1
② ASME B&PV Code, Section II, Part D, Table U
③ ASME B&PV Code, Section II, Part D, Table 2A
④ ASME B&PV Code, Section II, Part D, Table TM-1, Material Group G
⑤ ASME B&PV Code, Section II, Part D, Table TE-1, Material Group 3, Mean
⑥ When necessary, values are linearly interpolated or extrapolated and given in **bold** text.
⑦ The weight density and Poisson's ratio for stainless steel are 0.285 lb_m/in^3 and 0.29, respectively

Table 2.2-2 – Tungsten Heavy Metal Material Typical Room Temperature Properties*

Alloy	Density, lb_m/in^3	Yield Strength, psi	Ultimate Strength, psi	Elastic Modulus, $x10^6$, psi	Coefficient of Thermal Expansion $x10^{-6}$, in/in/°F
176	0.636	89,900	126,900	52.2	2.95
185	0.668	87,000	116,000	55.8	2.78

* Source: www.plansee.com, Densimet® 176 & 185 heavy metals

[5] American Society of Mechanical Engineers (ASME) Boiler and Pressure Vessel Code, Section II, *Materials, Part A – Ferrous Material Specifications*, and *Materials, Part D – Properties*, 2017 Edition.

2.2.2 Chemical, Galvanic, or Other Reactions

The RMSC payload that fully surrounds the tungsten gamma shields is fabricated from Type 304 stainless steel. Since tungsten and Type 304 stainless steel materials are very near each other on the galvanic corrosion chart, and with no electrolyte present, there will not be a significant galvanic reaction between these two materials. Additionally, the stainless steel of the OP-RMSC package does not have significant reactions with the interfacing components, air, or water.

2.2.3 Effects of Radiation on Materials

The gamma radiation associated with the radioactive material will have no effect on the austenitic stainless steel or the tungsten shields comprising the structural and shielding materials of the OP-RMSC package. As discussed in Section 2.1.1, *Discussion*, the polyurethane foam provides only limited impact protection of the RMSC payload. The effect of the radiation on the polyurethane foam to provide this minimal protection is negligible.

2.3 Fabrication and Examination

2.3.1 Fabrication

Both the OP-RMSC package and RMSC payload are fabricated utilizing conventional metal forming and joining techniques. Materials are procured in accordance with the standards delineated on the drawings in Appendix 1.3.1, *General Arrangement Drawings*. All welding procedures and welding personnel are qualified in accordance with Section IX of the ASME Boiler and Pressure Vessel (B&PV) Code[6].

2.3.2 Examination

The primary safety function of the OP-RMSC package is to provide protection of the RMSC payload that contains the gamma shielding for the special form radioactive material. To verify this function, each tungsten gamma shield is examined by performing a shielding test, as delineated in Section 8.1.6, *Shielding Tests*, prior to being utilized in the fabrication of a RMSC payload. In addition, all specified welds are visually inspected in accordance with the notes identified in Appendix 1.3.1, *General Arrangement Drawings*.

2.4 General Requirements for All Packages

The OP-RMSC package is evaluated, with respect to the general standards for all packaging specified in 10 CFR §71.43[2]. Results of the evaluations are discussed in the following sections.

2.4.1 Minimum Package Size

The smallest overall dimension of the OP-RMSC package is the 18 inch diameter of the body. This dimension is greater than the minimum dimension of 4 inches (10 cm) specified in 10 CFR §71.43(a). Therefore, the requirements of 10 CFR §71.43(a) are satisfied.

---

[6] American Society of Mechanical Engineers (ASME), Boiler and Pressure Vessel Code, Section IX, *Qualification Standard for Welding and Brazing Procedures, Welders, Brazers, and Welding and Brazing Operators*, 2017 Edition.

2.4.2 Tamper Indicating Device

A tamper indicating seal (wire/lead security seal) is attached to a pair of the closure lid bolts (refer to Figure 2.1-1), which provide visual evidence that the closure lid was not tampered during transportation. Therefore, the requirements of 10 CFR §71.43(b) are satisfied.

2.4.3 Positive Closure

The OP-RMSC package cannot be opened inadvertently. Positive closure of the OP-RMSC package is provided by the bolted closure lid. Therefore, the requirements of 10 CFR §71.43(c) are satisfied.

2.4.4 Valves

Because the OP-RMSC package is a confinement system and designed to transport only special form radioactive materials, there are no valves or other pressure retaining devices on the package. Therefore, the requirements of 10 CFR §71.43(e) are satisfied.

2.4.5 Package Design

As shown in Section 2.6, *Normal Conditions of Transport*, 3.3, *Thermal Evaluation Under Normal Conditions of Transport*, and 5.4, *Shielding Evaluation*, the OP-RMSC package design satisfies the requirements of 10 CFR §71.71. Therefore, the requirements of 10 CFR §71.43(f) are satisfied.

2.4.6 External Temperatures

The maximum decay heat load of the special form capsules is 100 watts (341 Btu/hr) for the maximum radioactive content of 16,000 Ci (592 TBq). With this decay heat, the maximum accessible surface temperature of the package in still air and shade is **265 °F (129 °C)**, which exceeds the temperature limit of 122 °F (50 °C) for a nonexclusive use shipment. With this high surface temperature, an expanded metal personnel barrier is installed over the OP-RMSC package after it is secured to its shipping pallet. The maximum temperature of the accessible surface of the personnel barrier is 115 °F (46 °C). Therefore, the requirements of 10 CFR §71.43(g) are satisfied by the OP-RMSC package with the personnel barrier.

2.4.7 Venting

With special form source capsules encapsulating the radioactive material, the OP-RMSC package does not incorporate any feature that would permit continuous venting during transport. Therefore, the requirements of 10 CFR §71.43(h) are satisfied by the OP-RMSC package.

2.5 Lifting and Tie-down Devices for All Packages

2.5.1 Lifting Devices

The OP-RMSC package is lifted by attaching a standard lift ring or other standard lifting component to the 3/8-16 UNC-2B threaded hole in the center of the 3/4-inch thick closure lid (refer to Figure 2.1-1). For the maximum gross package weight of 650 pounds (295 kg), the threaded hole will support the total weight. For added conservatism, a weight of 700 pounds will be applied to the threaded hole as a tensile load, which results in shear stresses in the internal threads.

The closure lid is a 3/4-inch thick, Type 304 steel plate. A 3/8-16 UNC-2B internal thread has a shear area of 0.8280 in²/in. Conservatively assuming only half the lid thickness for the thread engagement, the developed shear stress in the internal threads will be:

$$\tau_{3/8-16} = \frac{700}{(1/2)(3/4)(0.8280)} = 2{,}254 \text{ psi}$$

From Chapter 3.0, *Thermal Evaluation*, the maximum package surface temperature on the closure lid is 308 °F (153 °C). For this evaluation, a conservative temperature of 400 °F will be utilized. At this temperature, the minimum tensile yield strength for Type 304 stainless steel is 20,700 psi (from Table 2.3-1). The shear allowable is taken as 0.6 of the tensile yield strength at temperature, or 0.6 (20,700) = 12,420 psi. Therefore, the minimum factor of safety (F.S.) for lifting is:

$$\text{F.S.} = \frac{12{,}420}{2{,}254} = +5.51 > 3.0$$

Additionally, any possible failure of a 3/8 threaded fastener for a lifting component will not impair the ability of the OP-RMSC package to perform its shielding and confinement functions since those safety functions are provided by the RMSC payload. Therefore, the requirements of 10 CFR §71.45(a) are satisfied.

2.5.2 Tie-Down Devices

The OP-RMSC package is secured to a pallet for transport by straps, cargo net, or other standard tie-down equipment that does not attach to the package. The 3/8-16 UNC threaded hole in the closure lid that is utilized for lifting is disabled during transport. Since the design does not contain any tie-down devices that are a structural part of the package, the requirements of 10 CFR §71.45(b) are not applicable to the OP-RMSC package.

2.6 Normal Conditions of Transport

2.6.1 Heat

The maximum steady state temperature of any component in an ambient environment of 100 °F (38 °C) and full insolation for the OP-RMSC package is 752 °F (400 °C), which occurs in the stainless steel special form capsules. During the certification drop testing, the OP-RMSC package was exposed to a temperature greater than of 160 °F (71 °C) for several hours in an environmental chamber. There was no loss in operational capability or damage to the test units from the free and puncture drop tests performed at the hot test temperature. For the predicted higher temperatures with the 100 W (341 Btu/hr) decay heat load, there would also be no loss in operational capability or damage to the package.

2.6.2 Cold

For NCT cold condition, a -40 °F (-40 °C) steady state ambient condition is utilized per 10 CFR §71.71(c)(2), without insulation and any decay heat. This results in a uniform temperature of -40 °F (-40 °C) throughout the package. The OP-RMSC package was exposed to temperatures less than -22 °F (-30 °C) for several hours in an environmental chamber without negative effects.

2.6.3 Reduced External Pressure

The OP-RMSC package is a confinement boundary for a special form payload and does not have a pressure boundary. Therefore, the effect of reduced external pressure per 10 CFR §71.71(c)(3) is not applicable.

2.6.4 Increased External Pressure

The OP-RMSC package is a confinement boundary for special form payload and does not have a pressure boundary. Therefore, the effect of increased external pressure per 10 CFR §71.71(c)(4) is not applicable.

2.6.5 Vibration

The OP-RMSC package is a welded stainless steel package that surrounds the RMSC payload, which contains the gamma shields. The only components of the package that are bolted and removable are the outer and inner closure lids. The closure lids are secured to the body by eight (8) 1/2-13 UNC hex head bolts that are tightened to a minimum of 75 lb_f-ft torque, and fitted with a tamper indicating seal. The closure lid for the RMSC payload is secured by six (6) 3/8-16 UNC hex head cap screws that are tightened to a minimum of 35 lb_f-ft torque. As evidence by the certification drop testing, the package is essentially rigid, and hence, has a very high natural frequency. Based on the certification testing, the OP-RMSC package will not experience any damage or detrimental effects due to vibration normally incident to normal conditions of transport identified in 10 CFR §71.71(c)(5).

2.6.6 Water Spray

The stainless steel materials of construction utilized for the OP-RMSC package are such that the water spray test identified in 10 CFR §71.71(c)(6) will have a negligible effect on the package.

2.6.7 Free Drop

Since the gross weight of the OP-RMSC package is less than 11,000 pounds (5,000 kg), a 4-foot (1.2 meter) free drop is required per 10 CFR §71.71.(c)(7). As discussed in Appendix 2.12.1, *Certification Tests*, a NCT, 4-foot (1.2-meter) free drop with impact on the package closure lid was performed on a OP-RMSC certification test unit (CTU-1) as an initial condition for the subsequent hypothetical accident condition (HAC) tests. As noted in the appendix, there was no significant visible deformation to the OP-RMSC test unit. A radiation survey following all certification testing demonstrated the ability of the OP-RMSC packaging to maintain the shielding and confinement integrity of the RMSC payload. Therefore, the requirements of 10 CFR §71.71(c)(7) are satisfied.

2.6.8 Corner Drop

This test does not apply, since the materials of construction do not include wood or fiberboard, as delineated in 10 CFR §71.71(c)(8).

2.6.9 Compression

A 3,390-pound (1,538 kg) force, which is greater than five times the gross package weight, was applied to the OP-RMSC package while sitting in its normal upright position for a period of 24

hours (refer to Figure 2.6-4). No observable deformation and damage was detected. Therefore, the requirements of 10 CFR §71.71(c)(9) are satisfied.

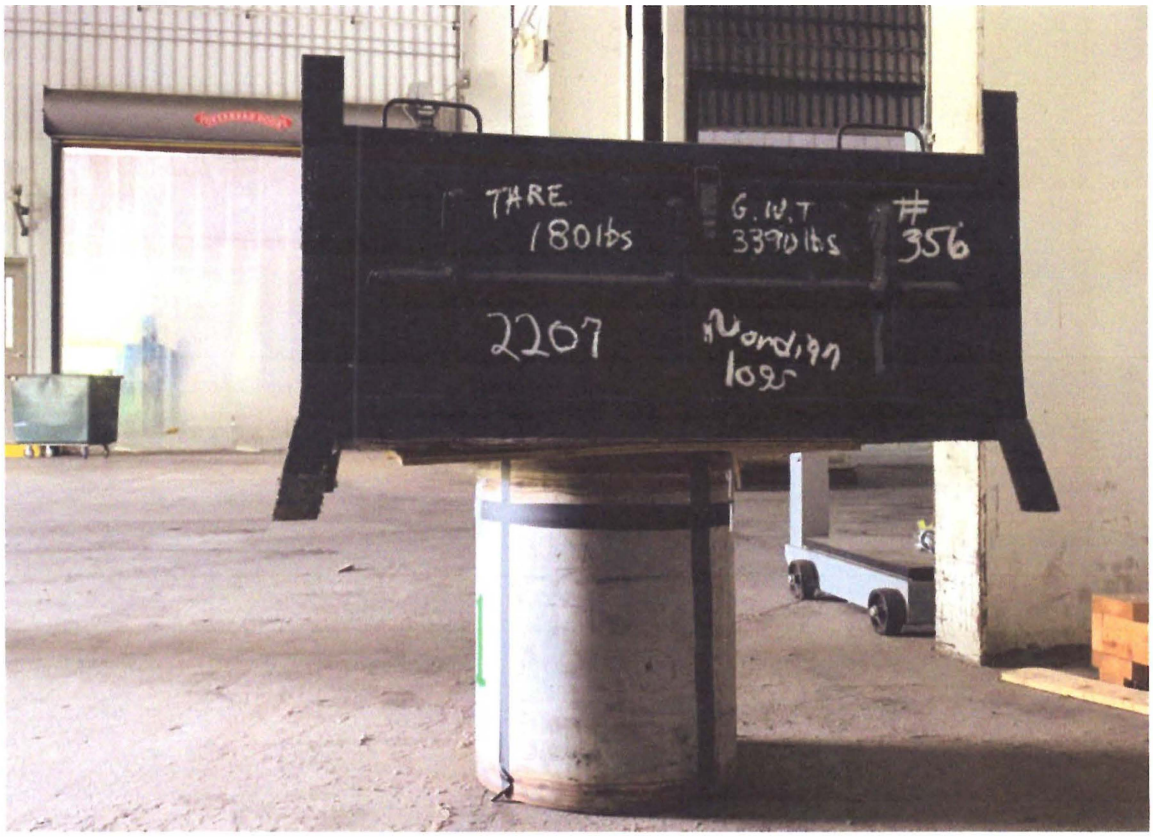

Figure 2.6-4 – View of OP-RMSC Package Compression Test After 24 Hours

2.6.10 Penetration

Per 10 CFR §71.71(c)(10), a 1¼ inch (3.2 cm) diameter, 13 pound (6 kg), hemispherical end steel rod is required to be dropped from a height of 40 inches (1 meter) onto the exposed surface of a package that is expected to be most vulnerable to puncture. The OP-RMSC package was puncture tested more severely in accordance with the hypothetical accident conditions (HAC) per §71.73(c)(3), which requires the heavier package to be dropped 40 inches (1 meter) onto a 6-inch (15 cm) diameter bar in the most vulnerable orientation. As noted in Appendix 2.12.1, *Certification Tests*, there was no visible significant damage from any of the puncture drops. Therefore, the requirements of 10 CFR §71.71(c)(10) are satisfied by the HAC puncture drop tests.

2.7 Hypothetical Accident Conditions

When subjected to the hypothetical accident conditions as specified in 10 CFR §71.73, the OP-RMSC package meets the performance requirements specified in Subpart E of 10 CFR 71. This conclusion is demonstrated in the following subsections, where each accident condition is addressed and the package is demonstrated to meet the applicable design criteria. The method of demonstration is primarily by test. The tests specified in 10 CFR §71.73 are applied sequentially, per Regulatory Guide 7.8.

Test results are summarized in Section 2.7.7, *Summary of Damage*, with details provided in Appendix 2.12.1, *Certification Tests*.

2.7.1 Free Drop

Subpart F of 10 CFR 71 requires performing a free drop test in accordance with the requirements of 10 CFR §71.73(c)(1). The free drop test involves performing a 30 foot (9 meter) free drop onto a flat, essentially unyielding, horizontal surface, with the package striking the surface in an orientation for which the maximum damage is expected. For the OP-RMSC, the free drop is addressed by test, in which several orientations are utilized. The free drop precedes both the puncture and thermal tests.

2.7.1.1 Technical Basis for the Free Drop Tests

The drop orientations selected for testing are intended to maximize the damage to the OP-RMSC package and cause a potential separation of the RMSC payload from the inner cavity. Once it separates from the OP-RMSC package, potential damage to the RMSC payload may occur from the subsequent puncture drop event, which could affect the tungsten gamma shielding. Should this condition occur, regulatory radiation limits might be exceeded. Therefore, the primary objective of the 30 foot (9 meter) HAC free drops is to damage the OP-RMSC package that results in the separation of the RMSC payload from the package body.

2.7.1.2 Test Sequence for the Selected Tests

Based on the above discussion, the OP-RMSC package was tested for three specific, HAC 30 foot (9 meter) free drop orientations: 1) an impact on the top, 2) an impact on the side, and 3) an impact with CG-over-the top corner. Although only a single "worst-case" 30 foot (9 meter) drop is required per 10 CFR §71.73(c)(1), multiple tests were performed on each test unit to ensure that the most vulnerable package features were subjected to "worst-case" impact forces and deformations. The specific conditions selected for the OP-RMSC Certification Test Units (CTUs) are summarized in Table 2.7-1.

2.7.1.3 Summary of Results from the Free Drop Tests

Successful HAC free drop testing of the CTUs indicates that the various OP-RMSC package features are adequately designed to withstand the HAC 30 foot (9 meter) free drop event. The most important result of the testing program was the demonstrated ability of the OP-RMSC package to retain the RMSC payload, which provides the shielding integrity and confinement of the raw material special form capsules, within the inner cavity. Significant results of the free drop testing are as follows:

- No significant damage to the OP-RMSC package structure from the free drop impacts.
- The RMSC payload did not separate from the OP-RMSC package.

Further details of the free drop test results are provided in Appendix 2.12.1, *Certification Tests*.

2.7.2 Crush

Subpart F of 10 CFR 71 requires performing a free drop test in accordance with the requirements of 10 CFR §71.73(c)(1). The free drop test involves performing a 30 foot (9 meter) free drop onto a flat, essentially unyielding, horizontal surface, with the package striking the surface in an

orientation for which the maximum damage is expected. The crush test is required only when the specimen has mass not greater than 1,100 lb_m (500 kg), an overall density not greater than 62.4 lb_m/ft^3 (1,000 kg/m^3), and radioactive contents greater than 1,000 A_2, not as special form. Since the density of the OP-RMSC package is greater than 62.4 lb_m/ft^3 (1,000 kg/m^3), and the radioactive payload is special form, the dynamic crush test is not applicable to the OP-RMSC package.

2.7.3 Puncture

Subpart F of 10 CFR 71 requires performing a puncture test in accordance with the requirements of 10 CFR §71.73(c)(3). The puncture test involves a 40 inch (1 meter) drop onto the upper end of a solid, vertical, cylindrical, mild steel bar mounting on an essentially unyielding, horizontal surface. The bar must be 6 inches (15 cm) in diameter, with the top surface horizontal and its edge rounded to a radius of not more than 1/4 inch (6 mm). The minimum length of the bar is to be 8 inches (20 cm). The ability of the OP-RMSC package to adequately withstand this specified drop condition is demonstrated via testing of two full-scale, OP-RMSC CTUs.

2.7.3.1 Technical Basis for the Puncture Drop Tests

The drop orientations selected for testing are intended to maximize the damage to the OP-RMSC package and cause potential separation of the RMSC payload from the inner cavity. Once it separates from the OP-RMSC package, potential damage to the RMSC payload may occur, which could affect the tungsten gamma shielding. Should this condition occur, the regulatory radiation limits might be exceeded. Therefore, the primary objective of the 40 inch (1 meter) HAC puncture drop is to cause further damage from the 30 foot (9 meter) free drop damage to the OP-RMSC package that could cause significant damage to or separation of the RMSC payload.

2.7.3.2 Test Sequence for the Selected Tests

Based on the above general discussion, the CTUs were specifically tested for three HAC puncture drop orientations that attempted to worsen the damage from the 30 foot (9 meter) free drop as part of the certification test program. Although only a single "worst-case" puncture drop is required by 10 CFR §71.73(c)(3), multiple puncture tests were performed to ensure that the most vulnerable package features were subjected to "worst-case" impact forces and deformations. The specific conditions selected for the OP-RMSC Certification Test Units (CTUs) are summarized in Table 2.7-1.

2.7.3.3 Summary of Results from the Puncture Drop Tests

Successful HAC puncture drop testing of the CTUs indicates that the OP-RMSC design features are adequately designed to withstand the HAC puncture drop event. The most important result of the testing program was the demonstrated ability of the OP-RMSC to contain its RMSC payload for shielding integrity. Significant results of the puncture drop testing are as follows:

- No evidence of any significant damage to the OP-RMSC body due to the impact with the puncture bar.
- The RMSC payload did not separate from the OP-RMSC package.

Further details of the free drop test results are provided in Appendix 2.12.1, *Certification Tests*.

2.7.4 Thermal

Subpart F of 10 CFR 71 requires performing a thermal test in accordance with the requirements of 10 CFR §71.73(c)(4), which requires a package to be exposed to a hydrocarbon fuel/air fire with a minimum temperature of 1,475 °F (800 °C) for 30 minutes. As discussed in Section 2.7.1, *Free Drop*, and Section 2.7.3, *Puncture*, there was no separation of the RMSC payload from the OP-RMSC package. Additionally, all of the structural and shielding materials, which are Type 304 stainless steel and tungsten for the OP-RMSC package and the RMSC payload have melting temperatures of 2,550 – 2,640 °F (1,400 – 1,450 °C) and 6,191 °F (3,422 °C), respectively. These melting temperatures are significantly higher than the specified fire temperature of 1,475 °F (800 °C). The only combustible materials in the OP-RMSC package are the non-structural polyurethane foam, which fills the annulus between the payload cavity and the outer pipe body, and the gasket between the inner closure lid and the payload cavity. The combustion of the foam or the gasket material has no effect on the structural or shielding materials of either the OP-RMSC package or the RMSC payload. Therefore, the OP-RMSC package satisfies the requirements of 10 CFR §71.73(c)(4).

2.7.5 Immersion – Fissile Material

The OP-RMSC package does not transport fissile material. Therefore, 10 CFR §71.73(c)(5) does not apply.

2.7.6 *Immersion – All Packages*

The OP-RMSC package is a confinement boundary for special form payload and does not have a pressure boundary. Therefore, the effect of pressure per 10 CFR §71.73(c)(6) is not applicable.

2.7.7 Deep Water Immersion Test (for Type B Packages Containing More than 10^5 A_2)

The OP-RMSC package contains a maximum of 2 Ci (0.07 TBq) of Co-60, 16,000 Ci (592 TBq) of Ir-192 or Se-75 isotopes, which have A_2 values of 11 Ci (.4 TBq), 16 Ci (0.6 TBq) [Ir-192] and 81 Ci (3.0 TBq), respectively. Since the OP-RMSC package does not contain more than 10^5 A_2 quantities of radioactive material, deep immersion per 10 CFR §71.61 is not applicable.

2.7.8 Summary of Damage

As discussed in the previous sections, the cumulative damaging effects of free drop and puncture drop tests were satisfactorily withstood by the full-scale OP-RMSC certification testing. Additionally, the thermal event has no effect on the metallic OP-RMSC package or the RMSC payload. Subsequent radiation post-test surveys of the RMSC CTU payloads confirmed that shielding integrity was maintained throughout the test series. Therefore, the requirements of 10 CFR §71.73 have been adequately demonstrated by the full-scale testing of the OP-RMSC package.

Table 2.7-1 - Summary of OP-RMSC Certification Test Unit (CTU) Tests and Results

Test No.	Test Description (Certification Test Unit No.)	Test Unit Angular Orientation		Test Results
		Longitudinal Axis (0° = upright)	Circumferential Axis (0° = as marked)	
1	4 foot, Top Down (CTU-1)	180°	N/A	No visible damage was observed.
2	30 foot, Top Down (CTU-1)	180°	N/A	Inner lid bolts failed, resulting in lid contacting the closure lid. RMSC remained within the OP-RMSC. No other damaged observed.
3	30 foot, Side Drop (CTU-2)	90°	0°	Impact created ~4 inch wide flat along the side. One closure lid bolt failed. No other damaged observed.
4	30 foot, CG-over-Top Corner (CTU-2)	132°	180°	Impact resulted in a ~1/2-inch fold on outer shell. Five (5) of the closure lid bolts were sheared, with two (2) bolts remaining on opposite side. Closure lid remain attached.
5	Puncture Drop, Top Down, (CTU-1)	180°	N/A	Puncture bar impacted center of closure lid with no observed additional damage.
6	Puncture Drop, Side Drop (CTU-2)	90°	0°	Puncture bar struck side of package, resulting in small deformation of outer shell. No other damaged observed.
7	Puncture Drop, Top Down, CG-over-Corner (CTU-2)	138°	180°	Puncture bar struck outer shell/closure lid interface, resulting in a small "half-moon" deformed area. No other damaged observed.

2.8 *Accident Conditions for Air Transport of Plutonium*

This section does not apply, since plutonium is not transported in the OP-RMSC package.

2.9 Accident Conditions for Fissile Material Packages for Air Transport

This section does not apply, since fissile material is not transported in the OP-RMSC package.

2.10 Special Form

The contents of the OP-RMSC package are a maximum of four (4) raw material special form source capsules. All four source capsules are limited to a maximum of 16,000 Ci (592 TBq) per shipment. One certification for an Ir-192 raw material special form capsule that would be transported in OP-RMSC is listed below. Other raw material capsules may be transported in the OP-RMSC provided the capsules are certified as special form.

Manufacture	Model Number	Certification Number
Industrial Nuclear Co., Inc.	INC-SFC-1	USA/0798/S-96

2.11 Fuel Rods

This section does not apply, since fuel rods are not transported in the OP-RMSC package.

2.12 Appendix

2.12.1 Certification Tests

2.12.1 Certification Tests

Presented herein are the results of normal conditions of transport (NCT) and hypothetical accident condition (HAC) tests that address free drop, puncture, and thermal test performance requirements of 10 CFR 71[7]. The certification tests are fully documented in the certification test report[8].

2.12.1.1 Introduction

The OP-RMSC, when subjected to the sequence of HAC tests specified in 10 CFR §71.73, subsequent to the NCT tests specified in 10 CFR §71.71, is demonstrated to satisfy the performance requirements specified in Subpart E of 10 CFR 71. As indicated in the introduction to Chapter 2.0, *Structural Evaluation*, the primary proof of performance for the HAC tests is via the use of full-scale testing. In particular, free drop and puncture testing of OP-RMSC CTUs confirms that the packaging will retain its shielding integrity following a worst-case HAC sequence.

2.12.1.2 Summary

As seen in the figures presented in Section 2.12.1.7, *Test Results*, successful testing of the CTUs indicates that the various OP-RMSC packaging design features are adequately designed to withstand the HAC tests specified in 10 CFR §71.73. The most important result of the testing program was the demonstrated ability of the OP-RMSC packaging to maintain its shielding integrity.

Significant results of the free drop tests are as follows:

- No significant damage to the OP-RMSC package structure from the free drop impacts.
- No separation of the RMSC payload from the OP-RMSC package.

Significant results of the puncture drop testing are as follows:

- No evidence of any significant damage to the OP-RMSC body due to the impact with the puncture bar.
- No separation of the RMSC payload from the OP-RMSC package.

2.12.1.3 Test Facilities

The free and puncture drop testing was performed utilizing a horizontal concrete slab, which is approximately 9-12 inches thick × 10 feet × 15 feet. The concrete slab is setting on a parking lot concrete slab that has an approximate thickness of 9½ inches. A 2 inch × 48 inch × 48 inch steel plate was placed on top of the concrete slab, grouted, and secured to the concrete slab by four (4) 5/8-inch anchor bolts. To increase the effective mass of the impact surface, a 5 inch thick steel plate was placed on top of the 2 inch thick plate and welded to the grouted plate. Considering only the concrete directly underneath the steel plates as being effective with a total thickness of 18½ inches for the concrete slabs, the mass of the drop pad (concrete and steel plates) is conservatively

[7] Title 10, Code of Federal Regulations, Part 71 (10 CFR 71) *Packaging and Transportation of Radioactive Material*, 1-1-20 Edition.

[8] Orano Federal Services LLC, Document TR-3023626-000, *Certification Test Report for the OP-RMSC Package*, Revision 0, August 17, 2020.

estimated to be 8,100 lb_m, which is more than 10 times the mass of the OP-RMSC CTUs. Based on these characteristics, the drop pad satisfied the requirement of 10 CFR §§71.71 and 71.73 for an essentially unyielding, horizontal surface.

The puncture bar assembly for the puncture tests was a 6-inch (15 cm) diameter × 25½ inch (65 cm) long bar that was welded to a 3/4-inch (19-mm) thick square steel plate. The top circumferential edge of the bar was rounded to a maximum of 1/4-inch (6-mm) radius. The free length of the bar was 25½ inches (65 cm) (i.e., height above the base plate), thus ensuring an adequate length to facilitate maximum damage to the CTU as required by 10 CFR §71.73(c)(3). Following the 30-foot (9-meter) free drop tests, the 3/4-inch (19 mm) thick plate of the puncture bar assembly was welded to the 5-inch (13 cm) thick steel plate on the drop pad. This configuration ensured that the puncture bar assembly was fully restrained for the puncture drop tests.

2.12.1.4 Certification Test Unit Description

The OP-RMSC package is a welded and bolted assembly that consists of an outer ∅18-inch × 22¾ inch high, Schedule 10S stainless steel pipe and an inner ∅10-inch × 12¼ inch high, Schedule 10S stainless steel pipe. The inner pipe forms the payload cavity for the RMSC payload. The annular space between the inner and outer pipes is filled with rigid polyurethane foam that provides limited impact protection of the RMSC payload. A 3/8-inch thick, 13¾ inch diameter stainless steel plate, which is secured with eight (8) 1/2-inch hex bolts, encloses the payload cavity. Above the inner lid, a 3/4-inch thick, 17½ inch diameter stainless steel closure lid is secured to the outer 18-inch diameter stainless steel pipe body with eight (8) 1/2-13 UNC hex head bolts. The outer lid is slotted to dissipate decay heat from the payload cavity via convective heat transfer. Within the payload cavity, there are four (4) 3/8-inch thick stainless steel vertical bars welded to the inner cavity wall. The bars are circumferentially located at 90-degrees to minimize the clearance between the RMSC payload and the cavity wall.

The RMSC payload consists of a welded stainless steel pipe assembly that is welded to a smaller pipe assembly, which forms the payload cavity. A fixed tungsten gamma shield is installed between the outer and inner pipe assemblies. A tungsten gamma shield is installed over the payload cavity to provide shielding of the payload cavity, and then a bolted closure lid is installed to retain the cavity tungsten gamma shield over the cavity.

Prior to free drop and puncture testing, the two RMSC CTUs were loaded with dummy raw material source capsules and a holder to simulate the special form capsules, and then loaded into the OP-RMSC CTUs. The actual pre-test weights of CTU-1 and CTU-2 were 646 pounds and 647 pounds, respectively. The CTUs differed slightly from the OP-RMSC packaging design depicted in Appendix 1.3.1, *General Arrangement Drawings* as follows:

- A neoprene gasket was utilized under the inner lid rather than the specified silicone gasket.
- The tampering indicating seal/safety wire between two of the closure lid bolts was not installed in the CTUs.

Neither of these minor differences had any effect on the response of the CTUs to the free drop and puncture drop tests.

2.12.1.5 Technical Basis for Tests

For the confinement system to fail, the OP-RMSC package would need to fail and allow the RMSC payload to separate from the package. This potential failure mode may only occur if either of the following conditions occurs:

1. Both the inner and outer lids of the OP-RMSC fail, resulting in the RMSC payload being ejected and sustain significant damage and,
2. The RMSC closure lid fails and the cavity tungsten gamma shield separates from the body.

For either of these potential conditions to occur, the OP-RMSC package would need to sustain significant damage due to the normal and hypothetical accident condition free drops, and then sustain further damage due to the 40-inch (1-meter) drop onto a 6 inch (15 cm) diameter vertical steel bar. Therefore, the primary objective of the 4 foot (1.2 meter) normal condition and the 30-foot (9-meter) hypothetical accident condition (HAC) free drops is to damage the OP-RMSC package that causes the RMSC payload to separate and possibly be damaged by the subsequent puncture drop. A secondary objective of the 9-meter (30-foot) HAC free drops is to attempt to damage the RMSC such that the tungsten gamma shields would become exposed, which could result in a loss of shielding.

The following sections provide the technical basis for the chosen test orientations and sequences for the OP-RMSC CTUs.

2.12.1.5.1 Temperature

Both cold and hot conditions for the free drops were utilized for the OP-RMSC certification testing. To maximize impact decelerations, a CTU was chilled to below -20 °F (-29 °C). To maximize deformations, a CTU was heated to over 160 °F (71 °C). The results of the package testing demonstrated that extreme temperatures had no effect on the shielding integrity of the OP-RMSC package. In addition, the austenitic stainless steel and tungsten materials are not susceptible to brittle fracture, as delineated in Section 2.1.2.2.1, *Brittle Fracture*.

For the puncture tests, ambient temperatures were utilized for the OP-RMSC certification testing.

2.12.1.5.2 Free Drop Tests

The OP-RMSC is qualified primarily by full-scale testing, with acceptance criterion being the ability to demonstrate shield integrity. Per 10 CFR §71.73(c)(1), the package is required to "strike an essentially unyielding surface *in a position for which maximum damage is expected.*" Therefore, for determining the drop orientations that satisfy the regulatory "maximum damage" requirement, attention is focused predominately on the issue of shield integrity of the RMSC payload.

To maximize the damage to the OP-RMSC package and potentially separating the RMSC payload, *three orientations have been selected for the free drop testing:*

1. Vertical, Top: This orientation targets the OP-RMSC closure lid and the inner closure lid. Should this impact be sufficiently severe, both of the OP-RMSC lids may fail and eject the RMSC payload from the cavity. The intent of this drop orientation is also to simulate a probable orientation that could occur in actual use in the field.

2. Side: This orientation again targets both the OP-RMSC closure lid and the inner closure lid. Should this impact be sufficiently severe, the OP-RMSC lid assemblies could become damaged and result in a possible ejection of the RMSC payload. Additionally, should the RMSC outer pipe and/or the closure lid fail, the tungsten gamma shielding would be exposed, which could possibly release or expose the special form radioactive sources.
3. CG-Over-Top Corner: This orientation targets the OP-RMSC closure lid and the inner closure lid. The intent of this orientation is to attempt to damage the tungsten gamma shields of the RMSC, and the closures of the payload packages. Should this impact be sufficiently severe, the OP-RMSC closure and inner cavity lids may fail and result in the ejection of the RMSC payload package. Additionally, should the RMSC closure lid fail, the special form radioactive sources could be released or exposed, which would result in unshielded radioactive sources.

2.12.1.5.3 Puncture Drop Tests

10 CFR §71.73(c)(3) requires a free drop of the specimen through a distance of 40 inches (1 meter) onto a puncture bar "in a position for which maximum damage is expected." As in Section 2.12.1.5.2, *Free Drop Tests*, the "maximum damage" criterion is evaluated primarily in terms of loss of shielding integrity. Loss of shielding integrity could occur should the RMSC payload be ejected from the OP-RMSC body, and subsequent damage of the tungsten gamma shields occurs.

The orientations selected for the puncture tests were the side and CG-over-top corner tests as discussed in Section 2.12.1.5.2, *Free Drop Tests*. The intent of these orientations is to accumulate puncture damage with the damage from the 30-foot free drops for the same orientations.

2.12.1.6 Test Sequence for Selected Free Drop and Puncture Drop Tests

The following sections establish the selected free drop, puncture drop, and thermal test sequence for the OP-RMSC CTUs based on the discussions provided in Section 2.12.1.5, *Technical Basis for Tests*. The tests sequences are summarized in Table 2.12.1-1 and illustrated in Figure 2.12.1-1 and Figure 2.12.1-2.

2.12.1.6.1 Certification Test Unit No. 1 (CTU-1)

Free Drop No. 1 is a NCT free drop from a height of four feet, impacting the top of the package. The 4 foot (1.2 meter) drop height is based on the requirements of 10 CFR §71.71(c)(7) for a package weighing less than 11,000 pounds. The purpose of this test was intended to cause maximum damage to the packaging in its most probable orientation to possibly eject the RMSC payload. This test was performed at a cold temperature.

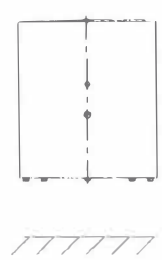

Free Drop No. 2 is a HAC free drop from a height of 30 feet (9 meter), impacting the top of the package, which is the same impact point as the NCT Free Drop No. 1. In this way, NCT and HAC free drop damage is cumulative. The 30 foot (9 meter) drop height is based on the requirements of 10 CFR §71.73(c)(1). The purpose of this test was intended to cause maximum damage to the packaging in its most probable orientation to possibly eject the RMSC payload. This test was performed at a cold temperature.

Puncture Drop No. 5 impacts directly onto the damage created by Free Drop Test 2, directly on the closure lid. The puncture drop height is based on the requirements of 10 CFR §71.73(c)(3). The purpose of Puncture Drop No. 5 is to cause maximum damage to the closure lid, and possibly result in the ejection of the RMSC payload from the OP-RMSC package.

2.12.1.6.2 Certification Test Unit No. 2 (CTU-2)

Free Drop No. 3 is a HAC free drop from a height of 30 feet, impacting the side. The 30 foot (9 meter) drop height is based on the requirements of 10 CFR §71.73(c)(1). The purpose of this test was intended to cause maximum damage to the closure lid, and possibly damage the RMSC payload. This test was performed at a hot temperature.

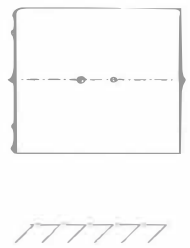

Free Drop No. 4 is a HAC free drop from a height of 30 feet, impacting the top corner, The 30 foot (9 meter) drop height is based on the requirements of 10 CFR §71.73(c)(1). The purpose of this test was intended to cause maximum damage to the closure lid and possibly separate the RMSC payload. This test was performed at a hot temperature.

Puncture Drop No. 6 impacts directly onto the damage created by Free Drop Test No. 3, directly on the side of the package. The puncture drop height is based on the requirements of 10 CFR §71.73(c)(3). The purpose of Puncture Drop No. 6 is to cause maximum damage to the closure lid, and possibly damage the RMSC payload.

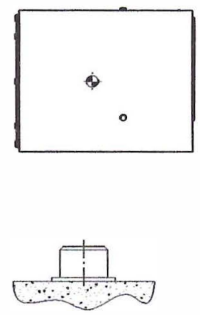

Puncture Drop No. 7 impacts directly onto the damage created by Free Drop Test No. 4, directly on the top corner. The puncture drop height is based on the requirements of 10 CFR §71.73(c)(3). The purpose of Puncture Drop No. 7 is to cause maximum damage to the closure lid, and possibly damage the RMSC payload.

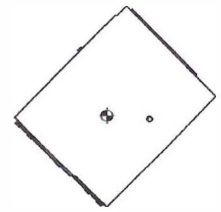

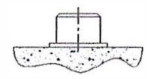

2.12.1.7 Test Results

The following sections report the results of free drop, puncture drop, and thermal tests following the sequence provided in Section 2.12.1.6, *Test Sequence for Selected Free Drop, Puncture Drop, and Thermal Tests*. Results are summarized in Table 2.12.1-2 (refer also to Figures 2.12.1-1 and 2.12.1-2).

Figures 2.12.1-3 through 2.12.1-23 sequentially photo-documents the certification testing process for the OP-RMSC CTUs.

2.12.1.7.1 Certification Test Unit No. 1 (CTU-1)

2.12.1.7.1.1 CTU-1 Free Drop Test No. 1

Free Drop No. 1 is a NCT free drop from a height of four feet, impacting the top of the package. As shown in Figure 2.12.1-3, the CTU was oriented vertically with respect to the horizontal impact surface (longitudinal angle 180°). The following list summarizes the test parameters:

- verified longitudinal angle as 180° ±1°
- verified drop height as 4 feet (1.2 meter), +2/-0 inches
- measured surface temperature of inner shell wall as -22 °F at time of test
- conducted test at 6:37 p.m. on Tuesday, 7/7/2020 time of test

The package rebounded (bounced) upon impact off the drop pad, and remained upright. No external damage was noted. The impact and post-test package are shown in Figures 2.12.1-4 and 2.12.1-5, respectively.

2.12.1.7.1.2 CTU-1 Free Drop Test No. 2

Free Drop No. 2 is a HAC free drop from a height of 30 feet, impacting the top of the package (closure lid). As shown in Figure 2.12.1-6, the CTU was oriented vertically with respect to the horizontal impact surface (longitudinal angle 180°). The following list summarizes the test parameters:

- verified longitudinal angle as 180° ±1°
- verified drop height as 30 feet (9 meter), +3/-0 inches
- measured surface temperature of inner shell wall as -22 °F at time of test

- conducted test at 6:48 p.m. on Tuesday, 7/7/2020

The package impacted the drop pad and did not rebound (bounce). The package remained upright on drop pad. No external damage was noted. The bolts securing the inner lid failed, allowing the inner lid to contact the closure lid. The RMSC payload remained within the OP-RMSC. The impact damage is shown in Figure 2.12.1-7 and Figure 2.12.1-8.

2.12.1.7.1.3 CTU-1 Puncture Drop Test No. 5

Puncture Drop No. 5 impacted directly onto the damage created by Free Drop Test 2, directly on the closure lid. As shown in Figure 2.12.1-9, the CTU was oriented vertically with the top down with respect to the impact pad so that the puncture bar would strike the damage from the 30-foot free drop. The following list summarizes the test parameters:

- verified longitudinal angle as 180° ±2°
- verified drop height as 40 inches (1 meter), +3/-0 inches
- measured surface temperature of outer shell of OP-RMSC as 92 - 94 °F at time of test
- conducted test at 10:55 a.m. on Wednesday, 7/8/2020

The package rebounded (bounced) off the puncture bar immediately following impact, and fell to its side. The impact struck the previous damage from the 30-foot free drop. No measureable damage was observed from the impact. The post-test condition is shown in Figure 2.12.1-10.

2.12.1.7.1.4 CTU-1 Post-Test Disassembly

Post-test disassembly of CTU-1 was performed on Wednesday, 7/22/20. After removing the OP-RMSC lid, all of the hex bolts securing the inner lid were found to have failed. However, there was no damage to the RMSC payload, as shown in Figures 2.12.1-11 and 2.12.1-12.

2.12.1.7.1.5 CTU-1 Post-Test Radiation Survey

Post-test radiation survey of RMSC CTU-1 was performed on Wednesday, 7/22/20. The post-test radiation survey was performed utilizing Ir-192 special form radioactive capsules. The total radioactive payload on the day of the survey for the post-test survey was 4,297 Curies (Ci) [159 TBq]. To account for the maximum design radioactive payload of 16,000 Ci (592 TBq), the measured values were adjusted upward by the ratio of 16,000/4,297 or 3.724 to determine the dose rate for the maximum radioactive content. The post-test measured dose rates for the maximum radioactive content of 16,000 Ci (592 TBq) are as follows:

Test Unit No.	Maximum Dose Rate [Top/Bottom/Side] (mrem/hr)								
	Surface			1-meter			2-meters		
CTU-1	15	19	123	4	0	4	0	0	0

As indicated above, the radiation dose levels were well below the requirements of 10 CFR §71.47(a) for NCT and 10 CFR §71.51(a)(2) for HAC for a non-exclusive use shipment.

2.12.1.7.2 Certification Test Unit No. 2 (CTU-2)

2.12.1.7.2.1 CTU-2 Free Drop Test No. 3

Free Drop No. 4 is a HAC free drop from a height of 30 feet, impacting the package side. As shown in Figure 2.12.1-13, the CTU was oriented parallel to the horizontal impact surface (longitudinal angle 90°, circumferential angle 0°). The following list summarizes the test parameters:

- verified longitudinal angle as 90° ±1°
- verified circumferential angle as 0° ±2°
- verified drop height as 30 feet (9 meter), +3/-0 inches
- measured surface temperature of inner shell wall as 169+ °F at time of test
- conducted test at 11:01 a.m. on Tuesday, 7/7/2020

The package rebounded (bounced) upon impact off the drop pad, and fell to its side. Impact created a ~4 inch wide flat along the side of the outer shell. One closure lid bolt on the impact side failed. No other external damage was noted. The impact damage is shown in Figure 2.12.1-14.

2.12.1.7.2.2 CTU-2 Free Drop Test No. 4

Free Drop No. 4 is a HAC free drop from a height of 30 feet, impacting the top corner of the package. As shown in Figure 2.12.1-15, the CTU was oriented 48° with respect to the horizontal impact surface (longitudinal angle 132°, circumferential angle 180°). The following list summarizes the test parameters:

- verified longitudinal angle as 132° ±1°
- verified circumferential angle as 180° ±2°
- verified drop height as 30 feet (9 meter), +3/-0 inches
- measured surface temperature of inner shell wall greater than 171 °F at time of test
- conducted test at 11:25 a.m. on Tuesday, 7/7/2020

The package rebounded (bounced) upon impact off the drop pad, and fell to its side. The impact produced a ~1/2 inch buckle/fold on the outer shell. Five (5) of the remaining seven (7) closure lid bolts failed. However, the closure lid did not separate from the body. No other damage was visible or noted. The impact damage is shown in Figure 2.12.1-16.

2.12.1.7.2.3 CTU-2 Puncture Drop Test No. 6

Puncture Drop No. 6 was intended to impact directly onto the damage created by Free Drop Test 3, directly impacting the side of the package. As shown in Figure 2.12.1-17, the CTU was oriented parallel to the horizontal impact surface (longitudinal angle 90°, circumferential angle 0°). The following list summarizes the test parameters:

- verified longitudinal angle as 90° ±1°
- verified circumferential angle as 0° ±2°

- verified drop height as 40 inches (1 meter), +2/-0 inches
- measured surface temperature of outer shell of OP-RMSC as 84 °F at time of test
- conducted test at 11:30 a.m. on Wednesday, 7/8/2020

The package rebounded (bounced) off the puncture bar immediately following impact. The impact struck the previous damage from the 30-foot free drop, resulting in a small deformed area of the outer shell. No other external damage was noted. The impact damage is shown in Figure 2.12.1-18.

2.12.1.7.2.4 CTU-2 Puncture Drop Test No. 7

Puncture Drop No. 7 was intended to impact directly onto the damage created by Free Drop Test 4, directly impacting the top corner of the package. As shown in Figure 2.12.1-19, the CTU was oriented 42° with respect to the horizontal impact surface (longitudinal angle 138°, circumferential angle 180°). The following list summarizes the test parameters:

- verified longitudinal angle as 138° ±1°
- verified circumferential angle as 180° ±2°
- verified drop height as 40 inches (1 meter), +2/-0 inches
- *measured surface temperature of outer shell of OP-RMSC as 100 - 103 °F at time of test*
- conducted test at 11:58 a.m. on Wednesday, 7/8/2020

The package rebounded (bounced) off the puncture bar immediately following impact. The impact struck the previous damage from the 30-foot free drop with no measureable deformation. No other external damage was noted. The impact damage is shown in Figure 2.12.1-20.

2.12.1.7.2.5 CTU-2 Post-Test Disassembly

Post-test disassembly of CTU-2 was performed on Wednesday, 7/22/20. After removing the OP-RMSC lid, and the hex bolt securing the inner lid, the 1/4-20 hex bolt that attaches the RMSC hoist ring to the lid was sheared. However, the RMSC payload was not damaged from any of the free drop and puncture drop tests. The post-test views of the RMSC payload are shown in Figures 2.12.1-21 thru 2.12.1-23.

2.12.1.7.2.6 CTU-2 Post-Test Radiation Survey

Post-test radiation survey of RMSC CTU-2 was performed on Wednesday, 7/22/20. The post-test radiation survey was performed utilizing Ir-192 special form radioactive capsules. The total radioactive payload on the day of the survey for the post-test survey was 4,297 Curies (Ci) [159 TBq]. To account for the maximum design radioactive payload of 16,000 Ci (592 TBq), the measured values were adjusted upward by the ratio of 16,000/4,297 or 3.724 to determine the dose rate for the maximum radioactive content. The post-test measured dose rates for the maximum radioactive content of 16,000 Ci (592 TBq) are as follows:

Test Unit No.	Maximum Dose Rate [Top/Bottom/Side/End] (mrem/hr)								
	Surface			1-meter			2-meters		
CTU-2	11	15	123	4	4	4	0	0	0

As indicated above, the radiation dose levels were below the requirements of 10 CFR §71.47(a) for NCT and 10 CFR §71.51(a)(2) for HAC for a non-exclusive use shipment.

Based on the test results, the OP-RMSC package design has been demonstrated to satisfy the requirements of Subpart F of 10 CFR 71 for the transportation of special form radioactive material.

Table 2.12.1-1 – Summary of OP-RMSC Certification Tests in Sequential Order[1]

Test No.	Test Description (Certification Test Unit No.)	Test Unit Angular Orientation		Test Unit Temperature (as measured)	Test Results
		Longitudinal Axis[2] (0° = horizontal)	Circumferential Axis[3] (0° = upright)		
1	4 foot, Top Down (CTU-1)	180°	N/A	-22 °F (inner shell)	No visible damage was observed.
2	30 foot, Top Down (CTU-1)	180°	N/A	-22 °F (inner shell)	Inner lid bolts failed, resulting in lid contacting the closure lid. RMSC remained within the OP-RMSC. No other damaged observed.
3	30 foot, Side (CTU-2)	90°	0°	>169 °F (inner shell)	Impact created ~4 inch wide flat along the side. One closure lid bolt failed. No other damaged observed.
4	30 foot, CG-over-Top Corner (CTU-2)	132°	180°	>171 °F (inner shell)	Impact resulted in a ~1/2-inch fold on other shell. Five (5) of the closure lid bolts were sheared, with two (2) bolts remaining on opposite side.
5	Puncture Drop, Top Down (CTU-1)	180°	N/A	92 – 94 °F (outer surface)	Puncture bar impacted center of closure lid with no observed additional damage.
6	Puncture Drop, Side (CTU-2)	90°	0°	84 °F (outer surface)	Puncture bar struck side of package, resulting in small deformation of outer shell. No other damaged observed.
7	Puncture Drop, CG-over-Top Corner (CTU-2)	138°	180°	100 – 103 °F (outer surface)	Puncture bar struck outer shell/closure lid interface, resulting in a small "half-moon" deformed area. No other damaged observed.

Notes:

1. Tested 7/7/2020 and 7/8/2020.
2. Longitudinal angle is relative to vertical axis of packaging (i.e., 0° is upright).
3. Circumferential angle is relative to rotation of package around vertical axis.

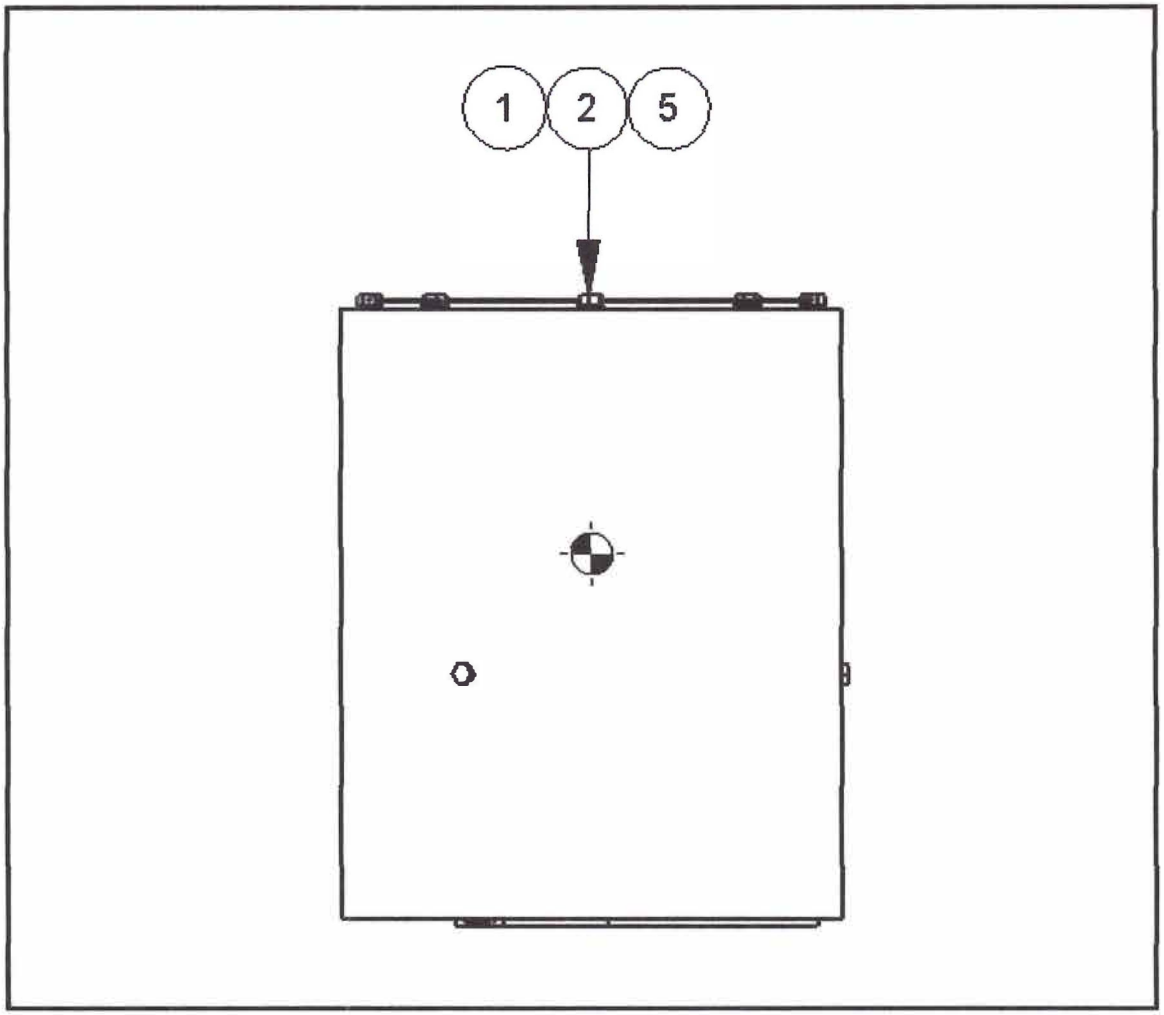

Figure 2.12.1-1 – Schematic Summary of CTU-1 Testing

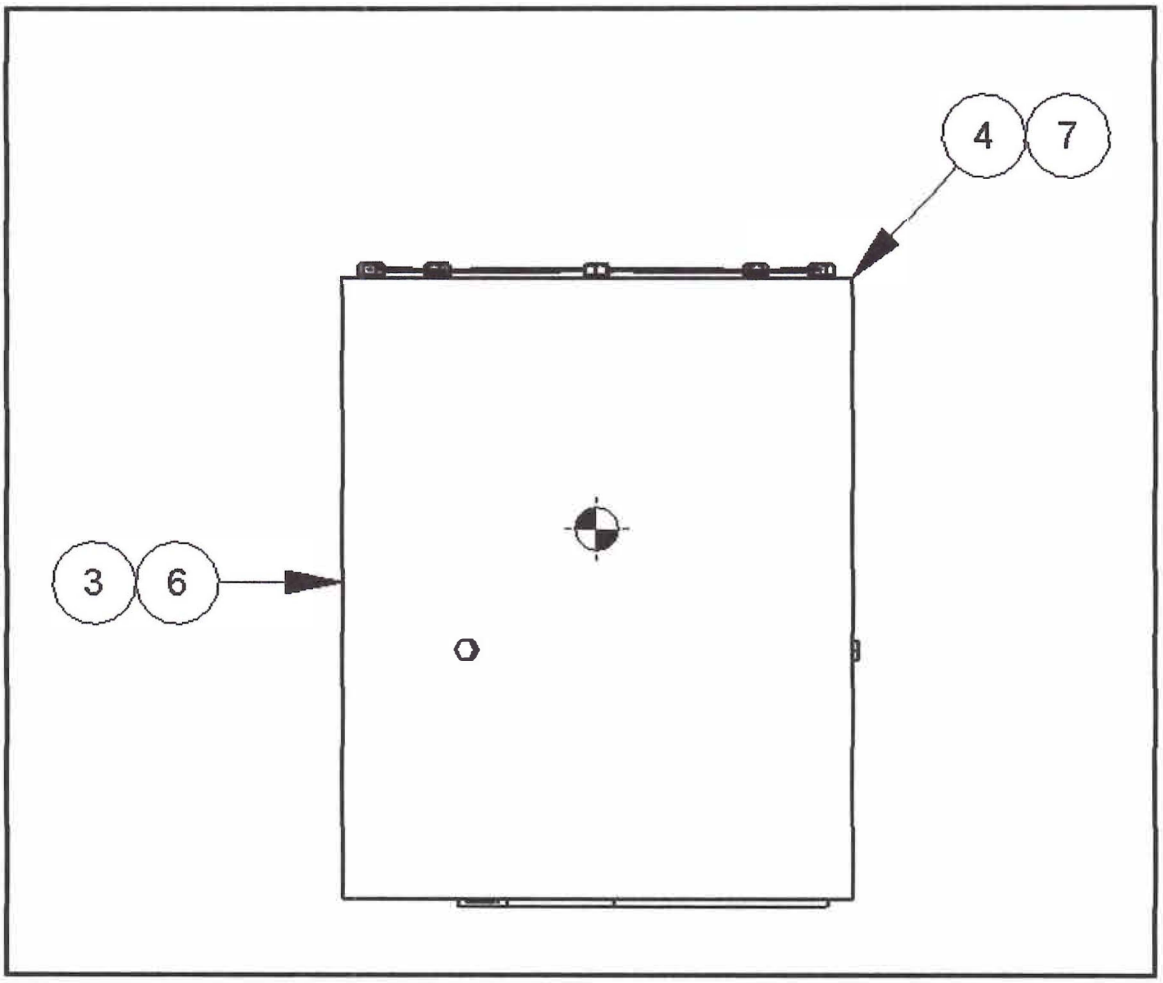

Figure 2.12.1-2 – Schematic Summary of CTU-2 Testing

Figure 2.12.1-3 – CTU-1 Free Drop Test No. 1: View of Test Setup

Figure 2.12.1-4 – CTU-1 Free Drop Test No. 1: View of Test Unit at Impact

Figure 2.12.1-5 – CTU-1 Free Drop Test No. 1: Close-up View of Lid Impact Area

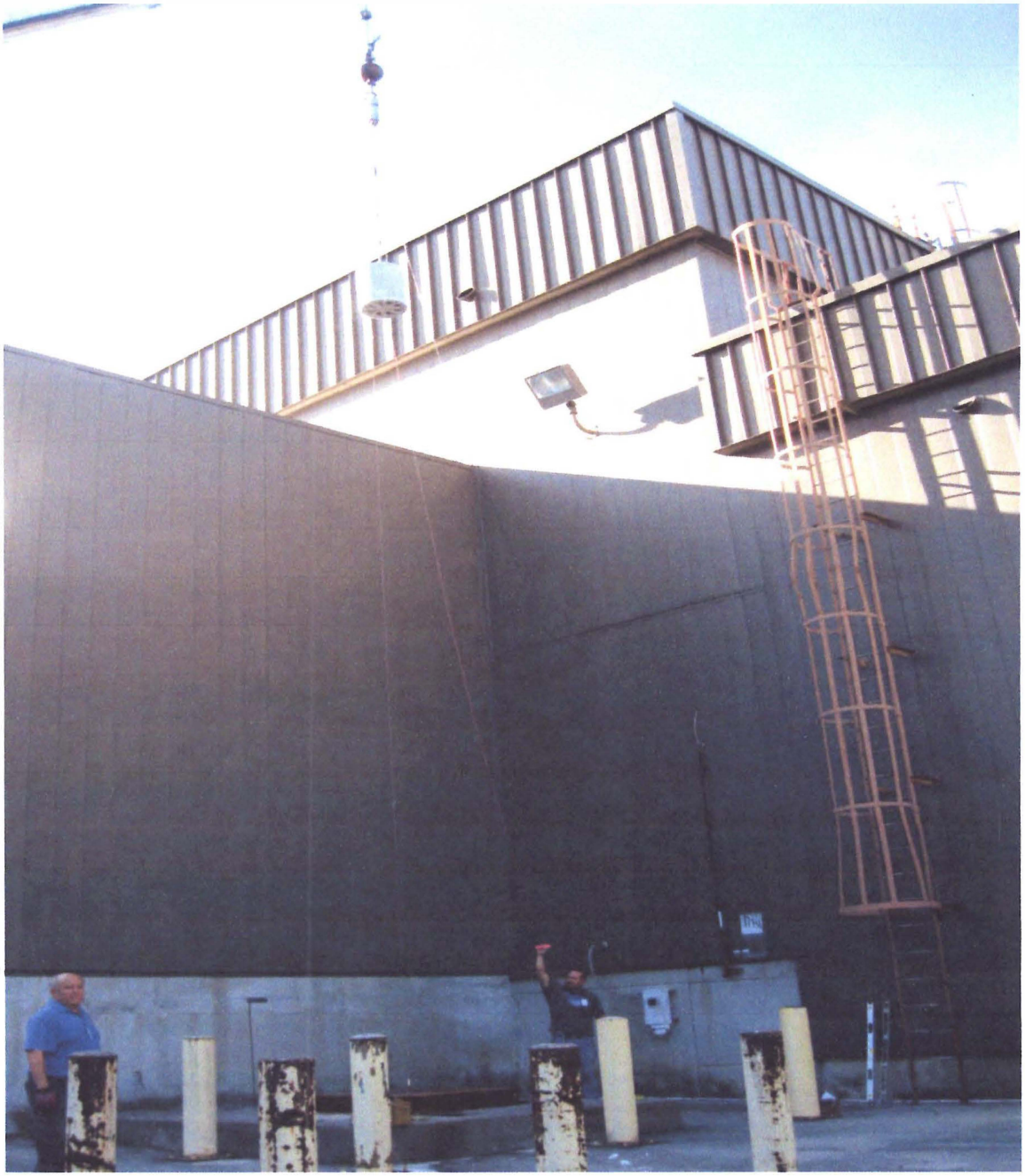

Figure 2.12.1-6 – CTU-1 Free Drop Test No. 2: View of Test Setup

Figure 2.12.1-7 – CTU-1 Free Drop Test No.2: View of Test Unit at Impact

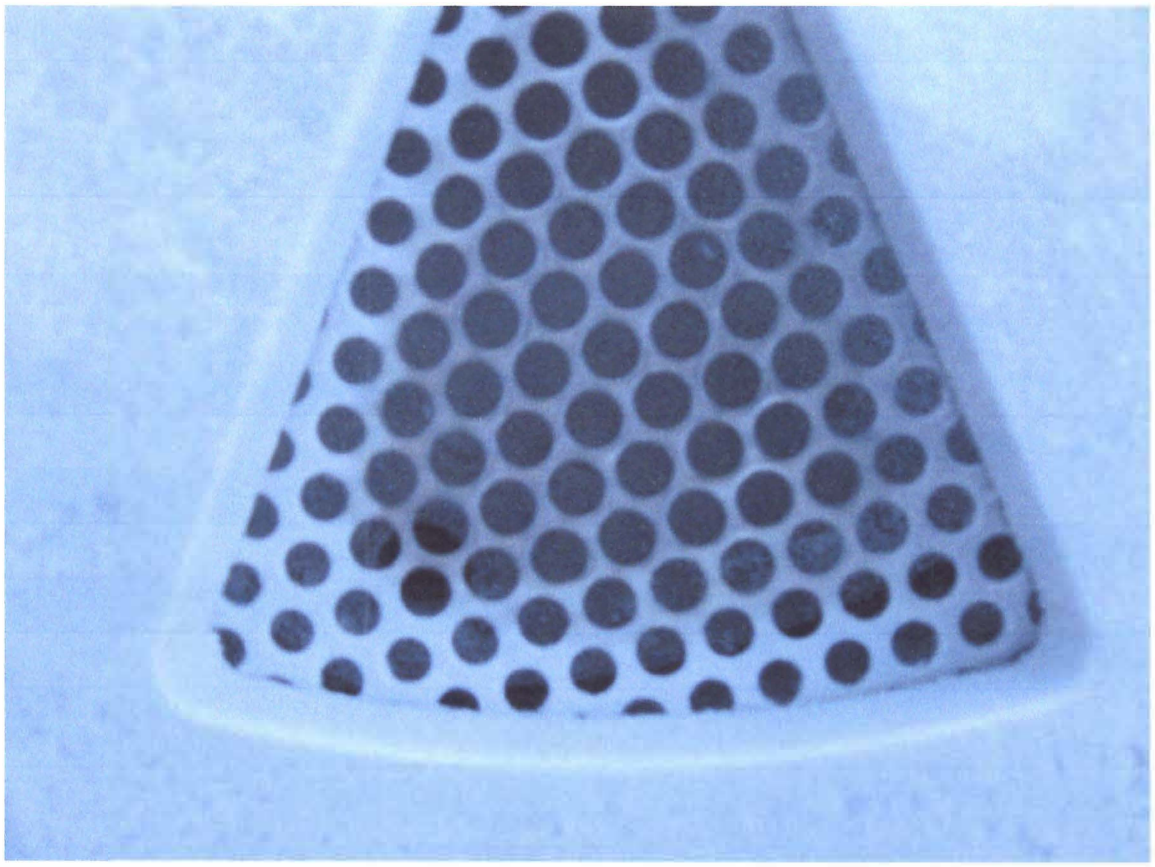

Figure 2.12.1-8 – CTU-1 Free Drop Test No. 2: Close-up View of Failed Inner Lid Bolt

Figure 2.12.1-9 – CTU-1 Puncture Drop Test No. 5: View of Test Setup

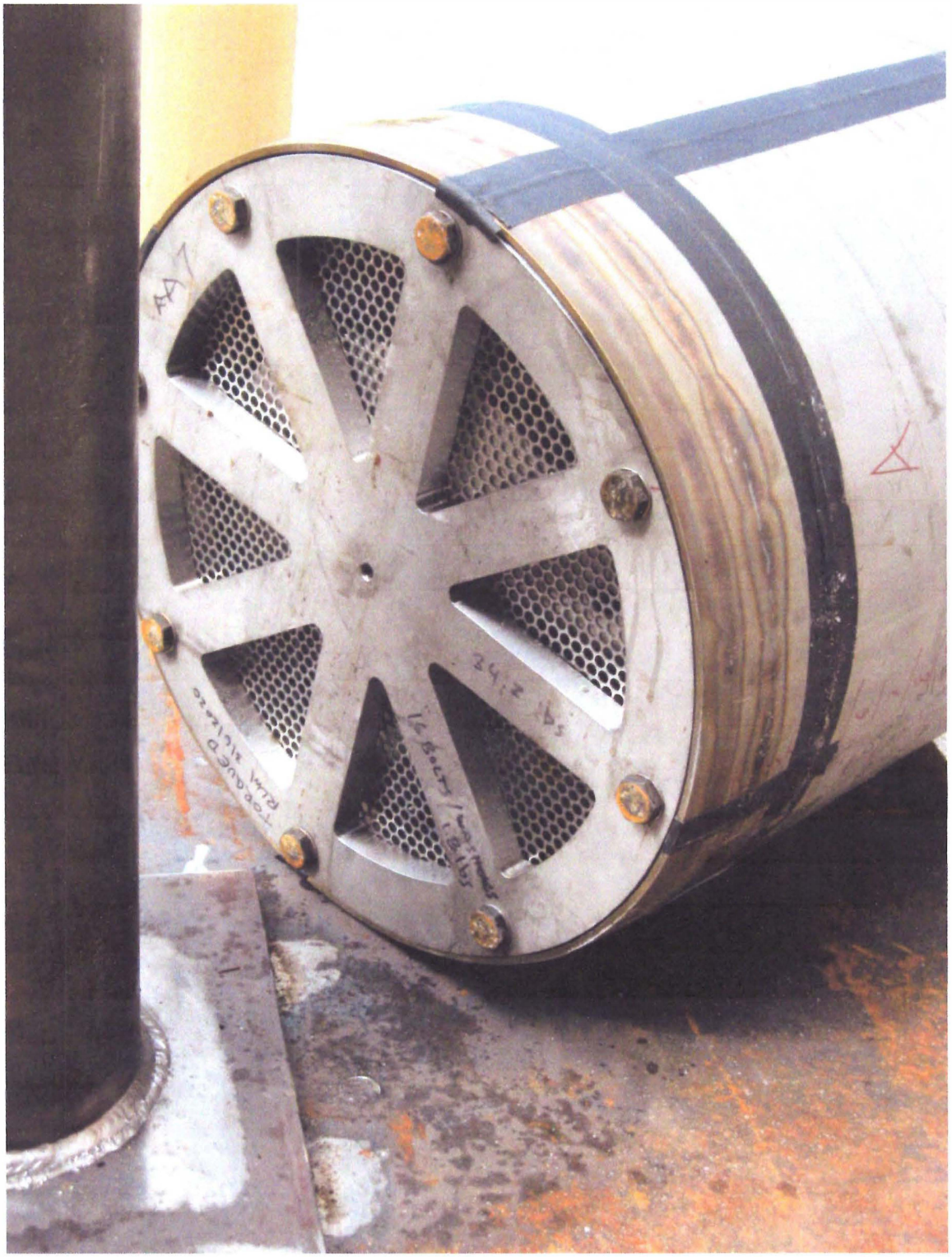

Figure 2.12.1-10 – CTU-1 Puncture Drop Test No. 5: Close-up View of Impact Closure Lid

Figure 2.12.1-11 – CTU-1 Post-Test Disassembly: Overall View of RMSC Payload

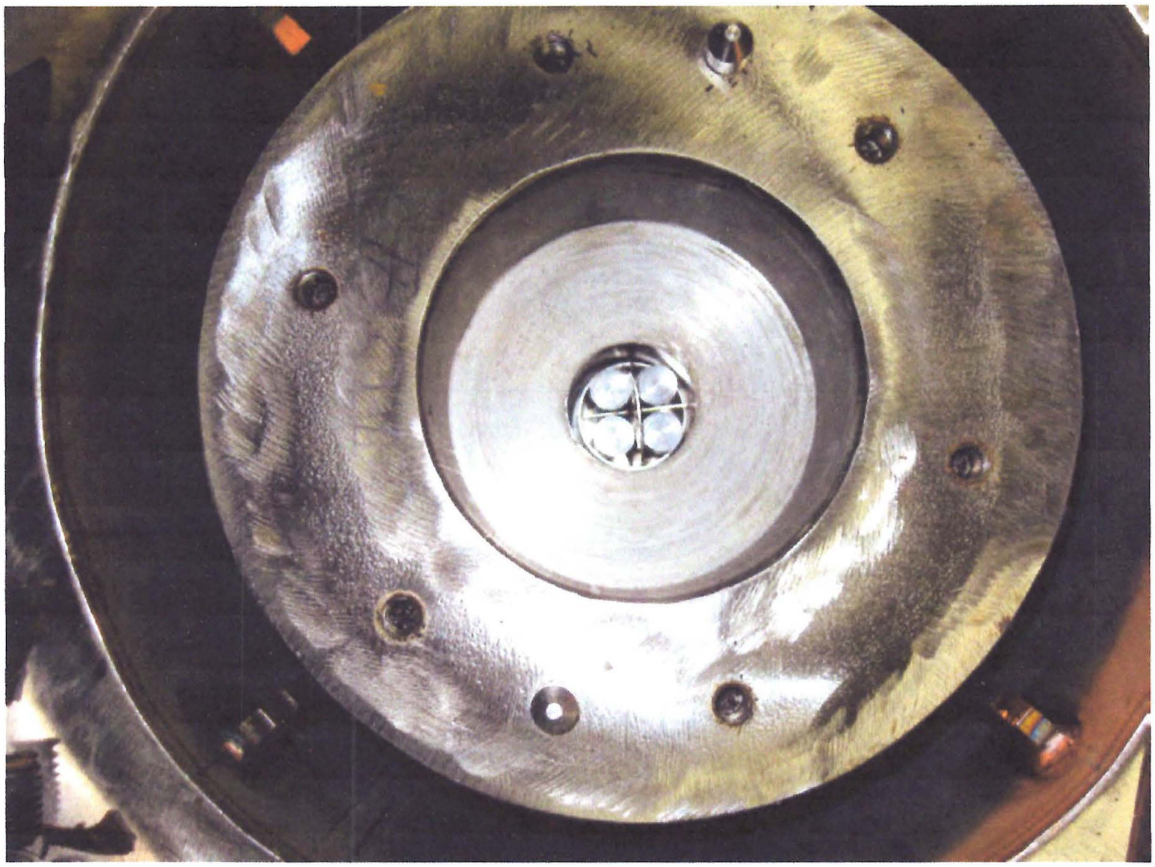

Figure 2.12.1-12 – *CTU-1 Post-Test Disassembly: View of Dummy Sources, RMSC Payload*

Figure 2.12.1-13– CTU-2 Free Drop Test No. 3: View of Test Setup

Figure 2.12.1-14 – CTU-2 Free Drop Test No. 3: Close-up View of Deformed Side Flat (~4 inch Width), Failed Closure Lid Bolt

Figure 2.12.1-15 – CTU-2 Free Drop Test No. 4: View of Test Setup

Figure 2.12.1-16 – CTU-2 Free Drop Test No. 4: View of Failed Closure Lid Bolts, Deformed Shell/Lid Interface

Figure 2.12.1-17 – CTU-2 Puncture Drop Test No. 6: View of Test Setup

Figure 2.12.1-16 – CTU-2 Puncture Drop Test No. 6: Close-up View of Impact Area

Figure 2.12.1-19 – CTU-2 Puncture Drop Test No. 7: View of Test Setup

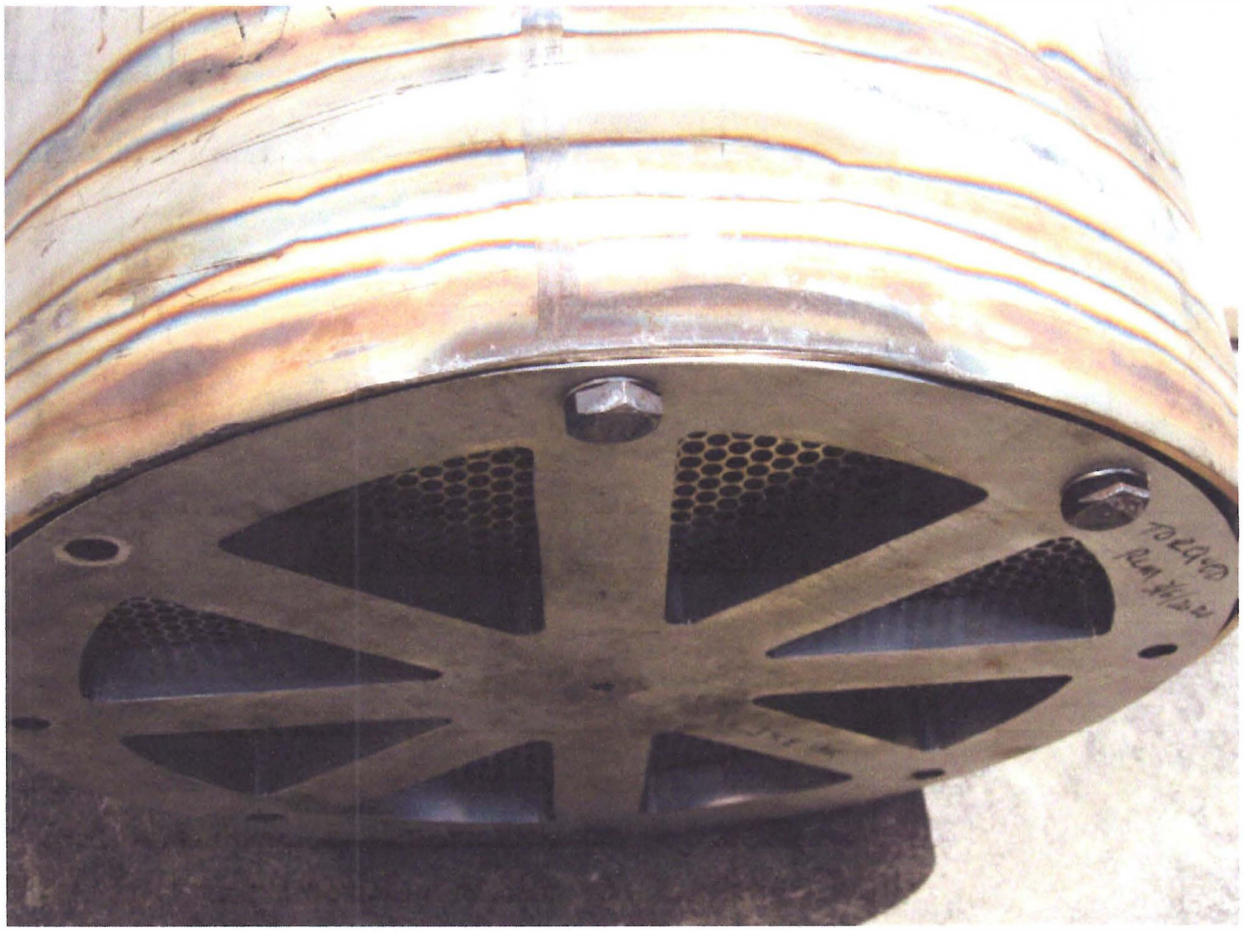

Figure 2.12.1-20 – CTU-2 Puncture Drop Test No. 7: Close-up View of Impact Area

Figure 2.12.1-21 – *CTU-2 Post-Test Disassembly: View of OP-RMSC Closure Lid w/ CG-Over-Top Corner Impact Damage*

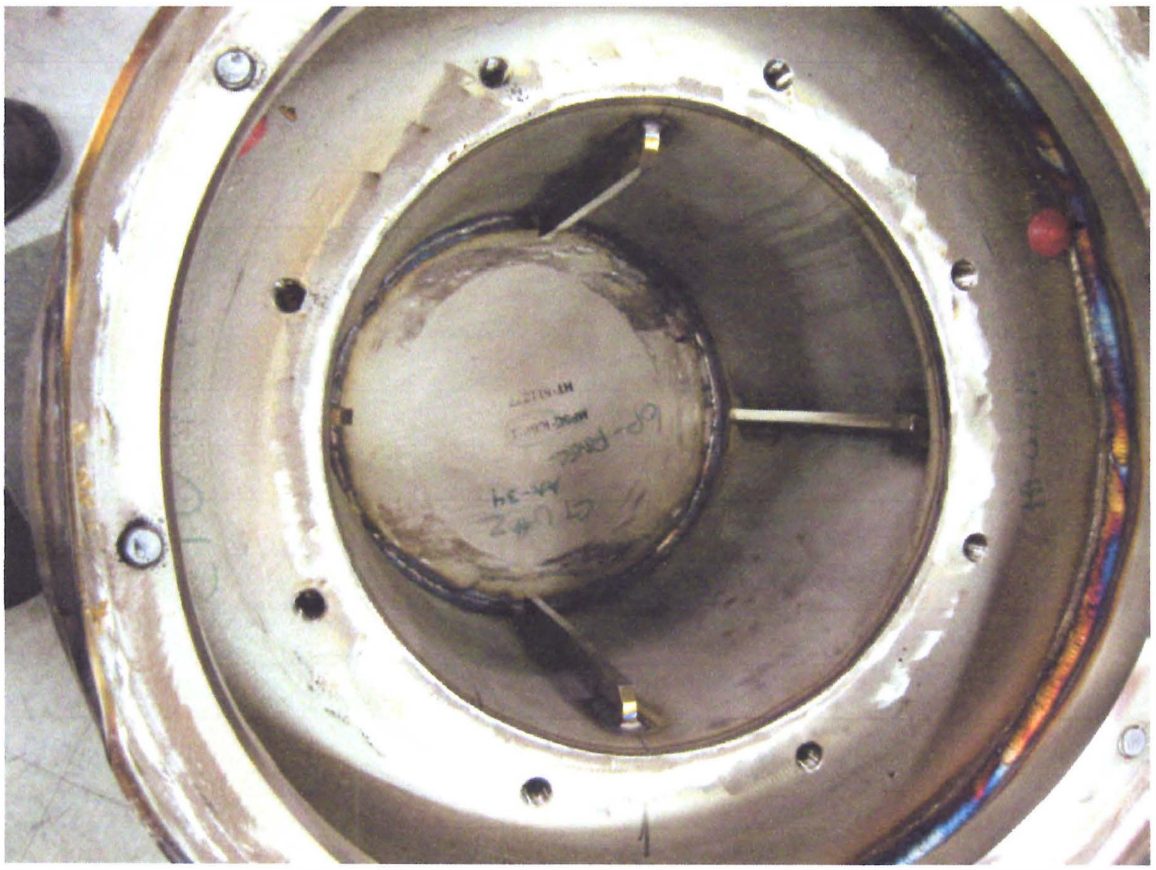

Figure 2.12.1-22 – CTU-2 Post-Test Disassembly: View of OP-RMSC Cavity w/ Side Impact Damage to Inner Wall (Left Side)

Figure 2.12.1-23 – CTU-2 Post-Test Disassembly: Overall View of RMSC Payload

3.0 THERMAL EVALUATION

This chapter establishes the compliance of the OP-RMSC transporting a payload of up to 16,000 Ci (592 TBq) of Ir-192 or Se-75, and 2 Ci (0.07 TBq) of Co-60 in special form with the thermal requirements of 10 CFR 71[9].

3.1 Description of Thermal Design

3.1.1 Design Features

The OP-RMSC package does not contain any specific thermal design features. The thermal performance of the package is demonstrated by test. Therefore, this section does not apply.

3.1.2 Content's Decay Heat

The OP-RMSC may contain up to 16,000 Ci (592 TBq) of Ir-192 or Se-75 in special form. The radiolytic decay heat of Ir-192 is 7.03×10^{-3} W/Ci [10]. The radiolytic decay heat of 2.41×10^{-3} W/Ci [9] for Se-75. Since the radiolytic decay heat of Ir-192 is greater than the radiolytic decay heat of Co-60 or Se-75, the heat load of Ir-192 payload bounds the two other payloads. For the limited Co-60 payload of 3 Ci (0.11 TBq), the maximum decay heat load is only 0.05 W (0.17 Btu/hr), which is negligible compared to the other two isotopes. Therefore, the maximum decay heat load for the OP-RMSC package is 100 W (341 Btu/hr) from the Ir-192 payload.

3.1.3 Summary Tables of Temperatures

The maximum surface temperature of the OP-RMSC is 374 °F (198 °C), as documented in Section 3.3, *Thermal Evaluation under Normal Conditions of Transport*, in full sunlight.

3.1.4 Summary Tables of Maximum Pressures

The containment of the OP-RMSC package is provided by the special form payload. Gas can freely move from the internal cavity to the environment during all phases of operation. Therefore, there are no internal pressures to be determined, since the OP-RMSC does not contain any pressure boundaries.

3.2 Material Properties and Component Specifications

3.2.1 Material Properties

The OP-RMSC package is constructed primarily of stainless steel pipe and plate welded assembly that surrounds a tungsten gamma shield. Since the structural integrity of the package is established by testing, the only pertinent temperature limits on the components is established by their melting temperatures for the fire based Hypothetical Accident Condition (HAC). The melting temperatures for tungsten and stainless steel are 6,192 °F (3,422 °C), and 2,800 °F (1,538 °C), respectively.

The payload was qualified per *Qualification of Special Form Radioactive Material,* in 10 CFR §71.75(b)(4).

---

[9] Title 10, Code of Federal Regulations, Part 71 (10 CFR 71), *Packaging and Transportation of Radioactive Material*, 1-1-20 Edition.

[10] *ORIGEN-S Decay Data Library and Half-Life Uncertainties*, O. W. Hermann, P. R. Daniel, and J. C. Ryman, Oak Ridge National Laboratory, ORNL/TM-13624, September 1998.

3.2.2 Component Specifications

The OP-RMSC package does not contain any component or material that is important to the thermal performance of the package. The two primary structural materials are austenitic stainless steel and the tungsten gamma shielding. As noted in Section 2.1.2.2.1, *Brittle Fracture*, both materials have been tested to temperatures below -20 °F (-29 °C) with no loss of structural or shielding capability. The limiting temperatures for the stainless steel structural and tungsten shielding materials are their respective melting temperatures, which are 2,800 °F (1,538 °C) and 6,191 °F (3,422 °C), respectively.

3.3 Thermal Evaluation under Normal Conditions of Transport

This section presents the thermal evaluation of the OP-RMSC package under the normal conditions of transport (NCT) per 10 CFR §71.71.

3.3.1 Heat and Cold

Since the total decay heat load of the OP-RMSC package is 100 W (341 Btu/hr), a detailed thermal analysis of the package with the RMSC payload was performed. The internal temperatures will very closely match those on the surface of the package. To determine the NCT maximum package temperatures with and without insolation, a 3-D, half-symmetry thermal model was created utilizing ANSYS® finite element analysis (FEA) program[11]. A plot of the ANSYS® thermal model is provided in Figure 3.3-1.

Per 10 CFR §71.71(c)(1), the worst-case high temperature condition for the package consists of an ambient temperature of 100 °F (38 °C) with maximum insolation. For this condition, the maximum surface temperature of the OP-RMSC is 374 °F (198 °C). The maximum surface temperature of the OP-RMSC in shade with an ambient temperature of 100 °F (38 °C) is 265 °F (123 °C). This temperature is greater than the maximum acceptable surface temperature of 122 °F (50 °C) for non-exclusive use shipments, as stipulated in 10 CFR §71.43(g). Therefore, an expanded metal personnel barrier with a minimum open area of 75% is installed over the OP-RMSC after the package is secured to the transport pallet. With the personnel barrier installed, the maximum accessible surface temperature is 115 °F (46 °C), which allows the package to be shipped as a non-exclusive use shipment. Figure 3.3-2 provides the configuration of the package with the personnel barrier.

The maximum temperature for any component in the OP-RMSC package with the 100 W (341 Btu/hr) in an ambient temperature of 100 °F (38 °C) with maximum insolation is 752 °F (400 °C), which occurs in the stainless steel special form capsules in the RMSC payload cavity. A summary of the maximum component temperatures for NCT is provided in Table 3.3.1-1.

The ANSYS® NCT thermal model results are illustrated in Figure 3.3-3 and Figure 3.3-4 with and without insolation, respectively.

For the cold condition with zero decay heat, the package surface temperature will be equal to the low temperature ambient conditions of -20 °F (-29 °C) and -40 °F (-40 °C). For the structural and shielding materials utilized in the OP-RMSC package, the sub-zero temperature has no effect on the ability of the package to maintain its confinement and shielding safety functions.

[11] *ANSYS® Finite Element Analysis Program*, Version 19.2, ANSYS Inc.

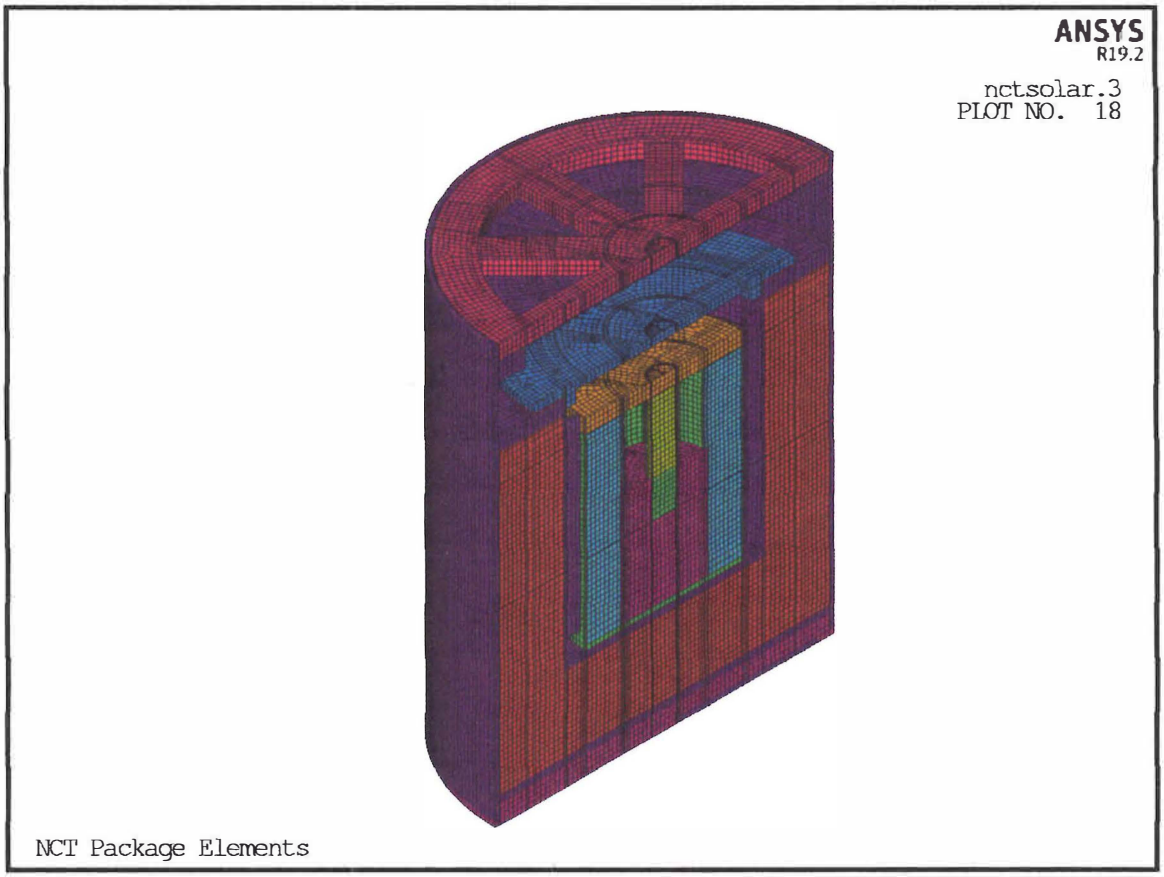

Figure 3.3-1 – ANSYS® Thermal Model of OP-RMSC Package

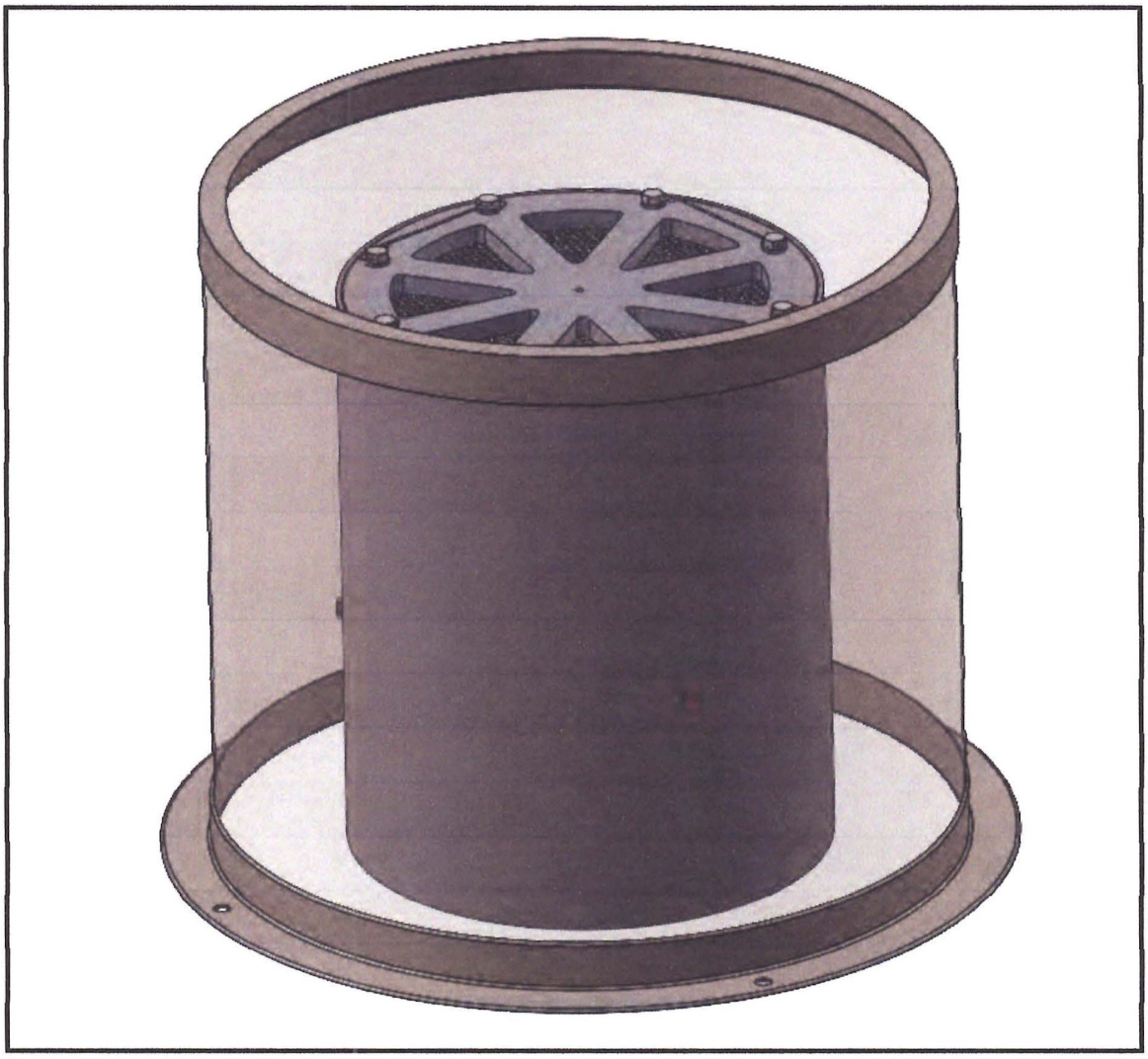

Figure 3.3-2 –OP-RMSC Package with Personnel Barrier

Table 3.3.1-1 – Summary of Maximum NCT Component Temperatures

Component	Temperature (°F)	
	NCT, 100 °F, Shade	NCT, 100 °F, Solar
Closure Lid	212	308
Outer Shell	265	374
Tungsten Shields	616	680
Special Form Capsules	680	752
Personnel Barrier	115	N/A

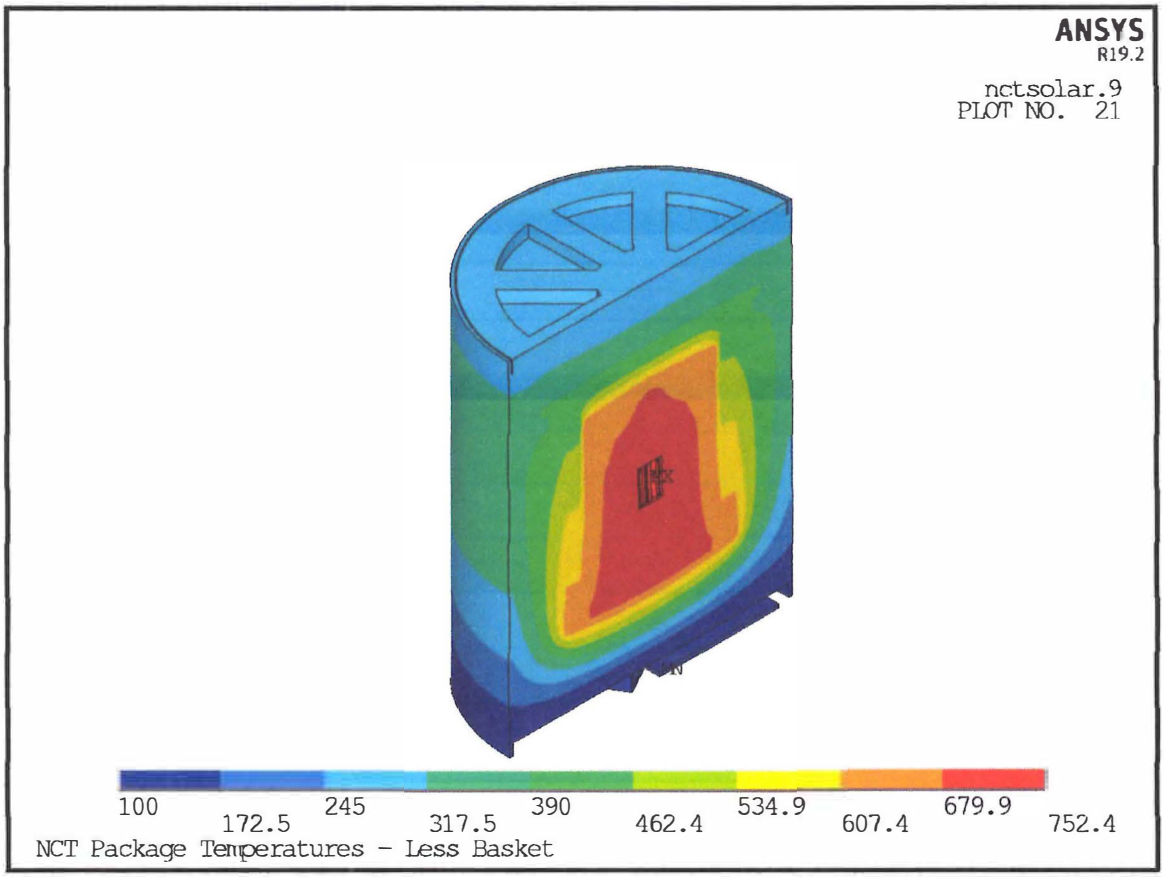

Figure 3.3-3 – OP-RMSC NCT Hot Temperature Profile with Insolation

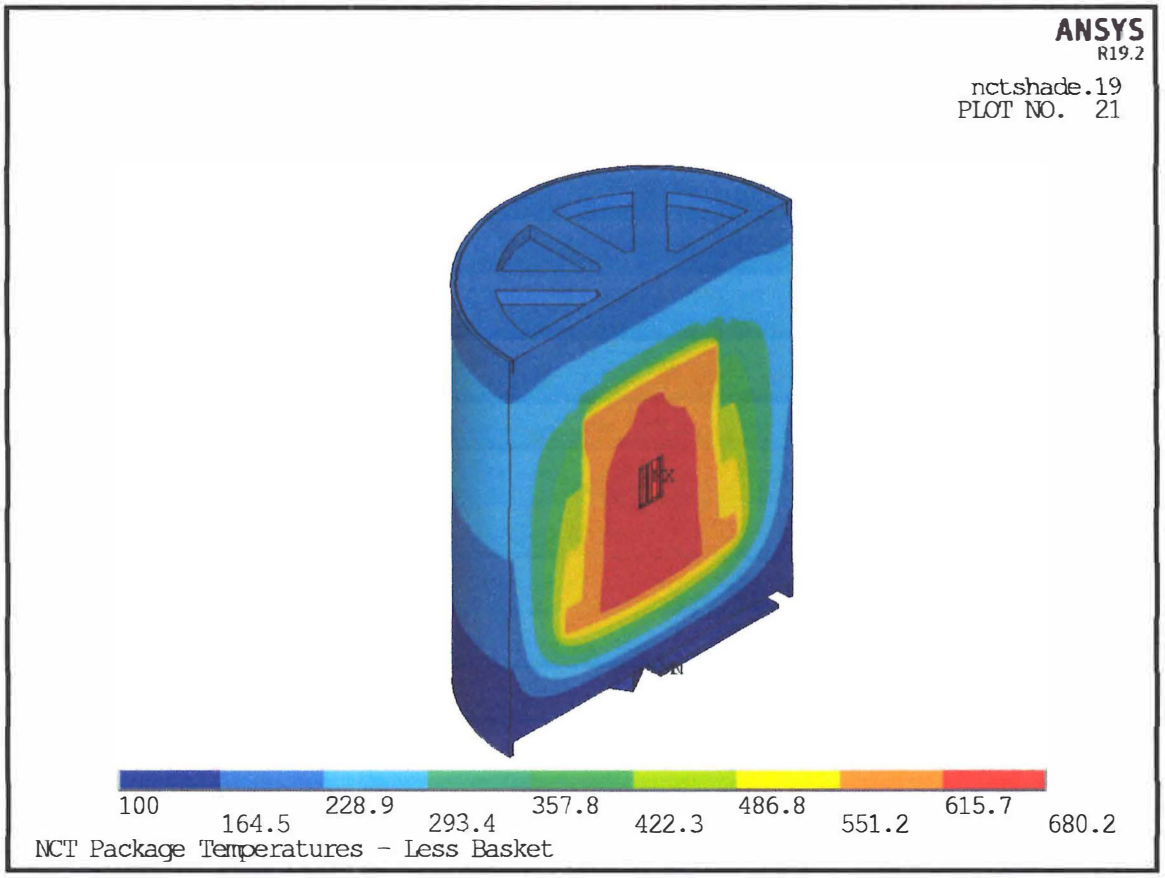

Figure 3.3-4 – OP-RMSC NCT Hot Temperature Profile without Insolation

3.3.2 Maximum Normal Operating Pressure

This section does not apply, since the OP-RMSC package does not contain any pressure boundaries. Therefore, there is no maximum normal operating pressure (MNOP) for the OP-RMSC package.

3.4 Thermal Evaluation under Hypothetical Accident Conditions

The thermal performance of the OP-RMSC package under Hypothetical Accident Conditions (HAC) in accordance with 10 CFR §71.73 requires that a test specimen must be exposed to a fully engulfing hydrocarbon fuel/air fire with an average flame temperature of 1,475 °F (800 °C) for a period of 30 minutes. The only combustible materials in the OP-RMSC packaging are the polyurethane foam and the silicone gasket, which are not a structural or shielding material. Since all of the structural and shielding materials (stainless steel and tungsten) have melting temperatures of 2,800 °F (1,538 °C) and 6,191 °F (3,422 °C), respectively, the OP-RMSC package is unaffected by the lower 1,475 °F (800 °C) temperature for the HAC fire event.

3.4.1 Initial Conditions

As noted in Appendix 2.12.1, *Certification Tests*, an OP-RMSC package certification test unit (CTUs) was uniformly heated above 160 °F (71 °C) as an initial condition for the 30-foot (9-meter) free drop. There was no rupturing of the stainless steel body to expose the tungsten

gamma shield. Therefore, the limiting temperature for the OP-RMSC package is the melting temperatures of the structural and shielding materials, which significantly exceeds the HAC fire event temperature.

3.4.2 Fire Test Conditions

As noted above, there was no failure of the OP-RMSC package structure that exposed the RMSC payload that contains the tungsten gamma shield shielding. Therefore, the peak package temperatures would not exceed the 1,475 °F (800 °C) fire temperature, which is well below the melting temperatures of either the stainless steel (2,800 °F) or the tungsten (6,191 °F).

The special form qualification of the payload certifies that it could withstand the fire test without degradation or rupture.

3.4.3 Maximum Temperatures and Pressures

Based on the certification tests performed on the OP-RMSC package, none of the components exceeds its temperature limit as described in Section 3.2.1, *Material Properties*. Specifically, the maximum package temperatures fall more than 500 °F (260 °C) below the lowest melting point of the stainless steel. Additionally, the special form payload does not exceed the temperature for the special form certification per 10 CFR §71.75(b)(4).

The containment of the OP-RMSC package is provided by the special form payload. Gas can freely move from the internal cavity to the environment during all phases of operation, so determination of internal pressures is not required.

Therefore, the OP-RMSC package satisfies the HAC thermal requirements set forth in 10 CFR §71.73(c).

3.4.4 Maximum Thermal Stresses

The effects of HAC thermal stresses on the OP-RMSC package are minimal for the single event of the HAC fire. The maximum fire temperature for the welded package would not exceed 1,475 °F (800 °C), which would not result in any metal fatigue or detrimental condition that affects the shielding and confinement safety functions of the package. In addition, the thermal expansion coefficient for stainless steel is over three times the thermal expansion coefficient for tungsten heavy metal. Since the tungsten shields are not rigidly attached to the RMSC stainless steel, no significant thermal stresses will develop within the RMSC payload due to the maximum 1,475 °F (800 °C) fire temperature.

3.4.5 Accident Conditions for Fissile Material Packages for Air Transport

This section does not apply, since the OP-RMSC does not contain fissile material.

3.5 Appendix

3.5.1 Sample of ANSYS® Input Files

```
!== DIMENSIONS
==========================================================================
/PREP7
! (All dimensions are nominal)
esize1  = 0.5            ! nominal element size
esize2  = 0.25           ! vertical element size
SELTOL,.0001
tol=0.0005               ! tolerance for merging the nodes
ndiv = 2                 ! multiplication factor on division
! Top Assembly (OP-RMSC-TA-1-2)
h0001 = 22.25            ! height of package from base to top of lid ((22.25) - OP_RMSC-OBA-1)
r0001 = 18.00/2          ! outer radius of package ((18.00) - OP-RMSC-OB-1)
h0002 = 0.125 - 0.013    ! neoprene gasket thickness minus 10% compression (OP-RMSC-TA-1-2, Item
4)
r0002 = 13.75/2          ! neoprene gasket outer radius (ILA-1 radius) (OP-RMSC-TA-1-2, Item 4)
r0003 = 10.75/2 - 0.165  ! neoprene gasket inner radius (BICA-1 Item #2 IR, Ø 10" sch 10S pipe)
!-- OP RMSC Dimensions ----------------------------------------------------------
! Outer Body Assembly
h0801 = 0.75             ! CR offset from OBW top edge
h0802 = 3.50             ! BIP offset from  top of CR
! Body inner cavity assembly (OP-RMSC-BICA-1)
h0901 = 12.63            ! height
h0902 =  1.13            ! RS offset from top of assembly
! Closure Ring (OP-RMSC-CR-1)
h1001 = 1.0              ! height (stock thickness)
r1001 = 17.59/2          ! outer radius
r1002 = 14.84/2          ! inner radius
! Outer Body (OP-RMSC-OB-1
h1101 = 22.00            ! height
r1101 = 18.00/2          ! outer radius, ([1]8" dia. Schedule 10S Pipe)
t1101 = 0.188            ! wall thickness, was .19
r1102 = r1101 - t1101    ! inner radius
! Closure Ring (OP-RMSC-BIP-1)
h1201 = 0.75             ! height (stock thickness)
r1201 = 17.46/2          ! outer radius
r1202 = 10.78/2          ! inner radius
! Inner Plate (OP-RMSC-IP-1)
h1301 = 0.38             ! height (stock thickness)
r1301 = 13.75/2          ! outer radius
! Inner Lid Ring (OP-RMSC-ILR-1)
```

```
h1401 = 0.50            ! height (stock thickness)
r1401 = 10.36/2         ! outer radius
r1402 = 9.36/2          ! inner radius
! Closure Lid (OP-RMSC-CL-1)
h1501 = 0.75            ! height (stock thickness)
r1501 = 17.5/2          ! outer radius
r1502 = 7.00            ! inner radius
! Perforated Sheet (OP-RMSC-PS-1)
r1601 = 14.5/2          ! radius of plate
h1601 = 0.06            ! stock thickness
pct1601 = 58            ! percentage of open area
! Bottom Plate Body (OP-RMSC-BBP-1)
h1701 = 0.38            ! plate stock thickness
r1701 = 17.59/2         ! outer radius
! Bottom Base Channel (OP-RMSC-BBC-3)
L1801 = 7.5             ! length
W1801 = 2.0             ! stock dimension
H1801 = 1.0             ! stock dimension
t1801 = 1/8             ! stock thickness
! Inner Cavity Bottom Plate (OP-RMSC-ICBP-1)
h1901 = 0.38            ! plate stock thickness
r1901 = 10.75/2         ! outer radius
! Inner Cavity Container Body (OP-RMSC-ICC-1)
h2001 = 12.25           ! height
r2001 = 10.75/2         ! outer radius, (10" dia. Schedule 10S Pipe)
t2001 = 0.165           ! wall thickness
r2002 = r2001 - t2001       ! inner radius
! Radial Spacer (OP-RMSC-RS-4)
h2101 = 10.00           ! height
w2101 = 0.75            ! width
t2101 = 0.25            ! stock thickness
ophtdim = 17
*dim,op_ht,,ophtdim
op_ht(15) = h0001                ! top surface
op_ht(14) = op_ht(15) - h1501        ! bottom of closure lid
op_ht(16) = op_ht(14) - h1601        ! bottom of perforated plate
op_ht(13) = op_ht(14) - h1001        ! bottom of closure ring
op_ht(11) = op_ht(14) - h0802        ! top of inner closure ring
op_ht(17) = op_ht(11) + h0002        ! top of neoprene gasket
op_ht(12) = op_ht(17) + h1301        ! top of inner closure plate
op_ht(10) = op_ht(11) - h1401        ! botom of inner lid ring
op_ht(9)  = op_ht(11) - h1201        ! bottom of inner closure ring
op_ht(8)  = op_ht(11) - h0902        ! top of radial spacer
```

```
op_ht(7) = op_ht(8) - h2101        ! bottom of radial spacer
op_ht(6) = op_ht(11) - h2001       ! bottom cavity plate top
op_ht(5) = op_ht(6) - h1901        ! bottom cavity plate bottom
op_ht(4) = h1801 + h1701           ! bottom plate top
op_ht(3) = h1801                   ! bottom plate bottom
op_ht(2) = h0001 - h1101           ! bottom of body tube
op_ht(1) = 0.00                    ! bottom of package
raddim1 = 13
*dim,rad_op,,raddim1
rad_op(1) = r2002 - w2101  ! inner edge of radial spacers
rad_op(2) = r1402          ! inner radius of inner lid ring
rad_op(3) = r1401          ! outer radius of inner lid ring
rad_op(4) = r2002          ! inner cavity container body inner radius
rad_op(5) = r2001          ! inner cavity outer radius
rad_op(6) = r1301          ! inner lid outer radius
rad_op(7) = r1002          ! outer lid bolt flange inner radius
rad_op(8) = r1501          ! outer lid outer radius
rad_op(9) = r1102          ! outer shell inner radius
rad_op(10)= r1101          ! outer shell outer radius
rad_op(11)= 7.000          ! outer radius of lid vents
rad_op(12)= 2.500          ! approximate inner radius of lid vents
rad_op(13)= r1601          ! radius of perforated plate
!-- RMSC Dimensions ------------------------------------------------------------
feltg = 0 !0.125           ! felt pad layer
! Stainless Steel Pipe Outer Shell (RMSC-BODY-1)
h0101 = 10.75              ! height
r0101 = 8.63/2             ! outer radius, (8" dia. Schedule 10S Pipe)
t0101 = 0.148              ! wall thickness
r0102 = r0101 - t0101      ! inner radius
! Body Upper Center Pipe (RMSC-BUCP-1)
h0201 = 3.55               ! height
r0201 = 4.50/2             ! outer radius, (4" dia. Schedule 10S Pipe)
t0201 = 0.120              ! wall thickness
r0202 = r0201 - t0201      ! inner radius
! Body Top Plate (RMSC-BTP-1)
h0301 = 0.75               ! height (stock thickness)
r0301 = 8.30/2             ! outer radius
r0302 = 4.50/2             ! inner radius
! Tungsten body shield (RMSC-TBS-1)
h0401 = 9.70               ! height
h0402 = 5.75               ! cavity depth
h0403 = 2.75               ! cavity shield hole depth
r0401 = 1.50/2             ! inner radius
```

```
r0402 = 4.60/2          ! cavity shield hole radius
r0403 = 8.20/2          ! outer radius
! Body Shell Bottom Plate (RMSC-BBP-1)
h0501 = 0.25            ! plate stock thickness
r0501 = 8.20/2          ! outer radius
! Lid Top Plate (RMSC-LTP-1)
h0601 = 0.63            ! height (stock thickness)
r0601 = 8.63/2          ! outer radius
! Tungsten cavity shield (plug) (RMSC-TNGS-1)
h0701 = 3.55            ! height
r0701 = 4.20/2          ! radius
! Special Form Capsule Basket (SPFC Basket)
h2201 = 2.000           ! height
r2201 = 1.375/2         ! outer radius
plgap = 0.010           ! contact from sfc to rmsc - replaced with t2201 - amr
t2201 = .035                    ! thickness of basket base and side = 2.035-2 - amr
! Payload
h3201 = h2201                   ! Height
r3201 = .5/2                    ! payload radius
rmschtdim = 11                  ! added basket bottom plate
*dim,rmsc_ht,,rmschtdim
rmsc_ht(1) = feltg              ! felt top/bottom plate bottom surface
rmsc_ht(2) = h0501 + rmsc_ht(1)     ! bottom plate top surface
rmsc_ht(3) = rmsc_ht(2) + h0401 - h0402 ! TS cavity bottom
rmsc_ht(4) = rmsc_ht(3) + plgap     ! bottom of payload basket
rmsc_ht(5) = rmsc_ht(4) + t2201             ! bottom of payload - amr
rmsc_ht(6) = rmsc_ ht(4) + h2201    ! top of payload
rmsc_ht(7) = rmsc_ht(2) + h0401 - h0403 ! TS plug bottom
rmsc_ht(8) = rmsc_ht(2) + h0401     ! TS top
rmsc_ht(9) = h0101 - h0301          ! rmsc body top plate bottom
rmsc_ht(10) = h0101                 ! rmsc body top plate top
rmsc_ht(11) = h0101 + h0601         ! rmsc lid top plate top
raddim2 = 10
*dim,rad_rmsc,,raddim2
rad_rmsc(1) = r2201 - t2201         ! payload basked inner radius - amr
rad_rmsc(2) = r2201                 ! payload basket outer radius - amr
rad_rmsc(3) = r0401                 ! TBS inner cavity radius
rad_rmsc(4) = r0701                 ! plug radius
rad_rmsc(5) = r0202                 ! BUCP inner radius
rad_rmsc(6) = r0201                 ! BUCP outer radius
rad_rmsc(7) = r0402                 ! TBS shield hole radius
rad_rmsc(8) = r0403                 ! TBS outer radius
rad_rmsc(9) = r0102                 ! Body inner radius
```

```
rad_rmsc(10) = r0101                ! BODY/lid outer radius
! offset rmsc to outer package bottom cavity plate top
*do,i,1,rmschtdim
 rmsc_ht(i) = rmsc_ht(i) + op_ht(6)
*enddo
!-- axial meshing array ----------------------------------------------------
heightdim = ophtdim + rmschtdim
*DIM,height,,heightdim
*do,i,1,ophtdim,
 height(i) = op_ht(i)
*enddo
*do,i,ophtdim+1,heightdim
 height(i) = rmsc_ht(i-ophtdim)
*enddo
! .. bubblesort ..............................................................
*do,i,(heightdim),1,-1
 *do,j,2,i,1
  *if,height(j-1),gt,height(j),then
   /COM,heights were out of order - Fixed!
   temp = height(j-1)
   height(j-1)=height(j)
   height(j)=temp
  *endif
 *enddo
*enddo
!-- radial meshing array ---------------------------------------------------
raddim = raddim1 + raddim2
*dim,radius,,raddim
*do,i,1,raddim1,
 radius(i) = rad_op(i)
*enddo
*do,i,raddim1+1,raddim
 radius(i) = rad_rmsc(i-raddim1)
*enddo
! .. bubblesort (error check/fix)..............................................
*do,i,(raddim),1,-1
 *do,j,2,i,1
  *if,radius(j-1),gt,radius(j),then
   /COM,radii out of order
   temp = radius(j-1)
   radius(j-1)=radius(j)
   radius(j)=temp
  *endif
```

```
 *enddo
*enddo
finish
!== MESHING ELEMENT SETTINGS
==========================================================
!        .1 - added insolation shell elements
/prep7
ET,1,PLANE55            ! 2-D thermal
ET,2,SOLID70            ! 3-D solid thermal
KEYOPT,2,2,1
KEYOPT,2,4,0
KEYOPT,2,7,0
KEYOPT,2,8,0
ET,3,SURF152
!KEYOPT,3,1,0
!KEYOPT,3,2,0
KEYOPT,3,3,2
KEYOPT,3,4,1
KEYOPT,3,5,0
!KEYOPT,3,6,0
KEYOPT,3,7,0
KEYOPT,3,8,3
KEYOPT,3,9,0
ET,4,SHELL131
KEYOPT,4,2,1
KEYOPT,4,3,2
ET,5,SHELL131
KEYOPT,5,3,2
ET,6,MATRIX50
KEYOPT,6,1,1
ET,7,SURF152 ! Shell for insolation horizontal flat surfaces
KEYOPT,7,1,0
KEYOPT,7,2,0
KEYOPT,7,3,0
KEYOPT,7,4,1
KEYOPT,7,5,0
KEYOPT,7,6,0
KEYOPT,7,7,0
KEYOPT,7,8,1
KEYOPT,7,9,0
ET,8,SURF152 ! Shell for insolation horizontal perf sheet
KEYOPT,8,1,0
KEYOPT,8,2,0
```

```
KEYOPT,8,3,0
KEYOPT,8,4,1
KEYOPT,8,5,0
KEYOPT,8,6,0
KEYOPT,8,7,0
KEYOPT,8,8,1
KEYOPT,8,9,0
ET,9,SURF152 ! Shell for insolation vertical surfaces (outer shell and lid vent surfaces)
KEYOPT,9,1,0
KEYOPT,9,2,0
KEYOPT,9,3,0
KEYOPT,9,4,1
KEYOPT,9,5,0
KEYOPT,9,6,0
KEYOPT,9,7,0
KEYOPT,9,8,1
KEYOPT,9,9,0
ET,10,SURF152          ! Shell for insolation inner lid vertical surfaces
KEYOPT,10,1,0
KEYOPT,10,2,0
KEYOPT,10,3,0
KEYOPT,10,4,1
KEYOPT,10,5,0
KEYOPT,10,6,0
KEYOPT,10,7,0
KEYOPT,10,8,1
KEYOPT,10,9,0
ET,11,SURF152          ! Shell for convection
KEYOPT,11,4,1
KEYOPT,11,5,0
KEYOPT,11,7,0
KEYOPT,11,8,3          ! evaluates heat flux at surface temp (TS)
KEYOPT,11,9,0
R,1,
R,5,,,,,,
RMORE,.001 ! dummy thickness for 152 surface elements
finish
==========================================================
/prep7
mptemp,,
mpdele,all,all,all
! - 1 - air ----------------------------------------------------------------
! Handbook of Applied Thermal Design, Eric C. Guyer, Part 5, Chapter 3, Table 3.1
```

```
! T = {F}, kxx = {BTU/(hr-in-F)}
mptemp,,
mptemp, 1,-40,  0,  50, 100, 200, 300
mptemp, 7, 400, 500, 600, 700, 800, 900
mpdata,kxx,1, 1, 1.009E-3, 1.093E-3, 1.195E-3, 1.294E-3, 1.482E-3, 1.661e-3
mpdata,kxx,1, 7, 1.833E-3, 2.000E-3, 2.162E-3, 2.320E-3, 2.474E-3, 2.625e-3
! - 2 - cask body (304 SST) ----------------------------------------
! kxx: ASME B&PV Code, Section II, Part D, Table TCD, Material Group J
! T = {F}, kxx = {BTU/(hr-in-F)}
mptemp,,
mptemp, 1,  70, 100, 200, 300, 400, 500
mptemp, 7, 600, 700, 800, 900,1000,1100
mptemp,13,1200,1300,1400,1500
mpdata,kxx,2, 1,0.717,0.725,0.775,0.817,0.867,0.908
mpdata,kxx,2, 7,0.942,0.983,1.025,1.058,1.092,1.133
mpdata,kxx,2,13,1.167,1.208,1.242,1.275
! - 3 - polyurethane foam (10 pcf) ----------------------------------------
! General Plastics, Design Guide for use of LAST_A_FOAM(R) FR-3700 for Crash &
! Fire Protection of Radioactive Material Shipping Containers, issue 5
! T = {F}, kxx = {BTU/(hr-in-F)}
mptemp,,
mp, kxx,3,2.424e-3     ! BTU/(h-in-F)
! - 4 - inner lid (304 SST) ----------------------------------------------
MPCOPY,,2,4
TBCOPY,all,2,4
! - 5 - outer lid (304 SST) ----------------------------------------------
MPCOPY,,2,5
TBCOPY,all,2,5
! - 6 - rmsc body tube (304 SST) ----------------------------------------
MPCOPY,,2,6
TBCOPY,all,2,6
! - 7 - rmsc lid (304 SST) ----------------------------------------------
MPCOPY,,2,7
TBCOPY,all,2,7
! - 8 - tungsten shield (Densimet 185) ----------------------------------
! https://www.plansee.com/en/materials/tungsten-heavy-metal.html
! Densimet 185 is a 97% Tungsten sintered alloy with the remainder consistsing
! of a binder of Iron and Nickel.  T = {F}, kxx = {BTU/(hr-in-F)}
mptemp,,
!mptemp, 1,  212, 392, 752, 1112, 1472                    ! °F
!mp, kxx,8,4.334      ! BTU/h/in/F (90 W/m-K) at 500 deg C
mp, kxx,8,4.141      ! BTU/h/in/F (86 W/m-K) at 500 deg C
!mpdata,kxx,8, 1, 5.296, 4.863, 4.333, 3.948, 3.659                    ! Btu/hr-in-F
```

```
! -  9 - tungsten plug ----------------------------------------------------
MPCOPY,,8,9
TBCOPY,all,8,9
! - 10 - payload ------------------------------------------------------------
MPCOPY,,2,10
TBCOPY,all,2,10
! - 11 - payload felt material----------------------------------------------
mp,dens, 11, 20.6/1728  ! lb/in^3
mp, kxx, 11, 0.03/12    ! BTU/h/in/F (90 W/m-K) at 500 deg C
! - 12 - radial/axial TS shield gaps (air) ----------------------------------
MPCOPY,,1,12
TBCOPY,all,1,12
! - 13 - Perforated Sheet ---------------------------------------------------
! kxx: ASME B&PV Code, Section II, Part D, Table TCD, Material Group J
! T = {F}, kxx = {BTU/(hr-in-F)}
! conductivity multiplied by 2 and density by 1/2 for 50% open area.
mptemp,,
mptemp, 1,  70, 100, 200, 300, 400, 500
mptemp, 7, 600, 700, 800, 900,1000,1100
mptemp,13,1200,1300,1400,1500
mpdata,kxx,13, 1,2*0.717,2*0.725,2*0.775,2*0.817,2*0.867,2*0.908
mpdata,kxx,13, 7,2*0.942,2*0.983,2*1.025,2*1.058,2*1.092,2*1.133
mpdata,kxx,13,13,2*1.167,2*1.208,2*1.242,2*1.275
! - 14 - upper cavity air ---------------------------------------------------
! See material 1 for references
! T = {F}, kxx = {BTU/(hr-in-F)}
MPCOPY,,1,14
TBCOPY,all,1,14
!mptemp, 1,-100,   0,  32,  68, 100, 200
!mptemp, 7, 300, 400, 500, 600, 800,1000
!mptemp,13,1200,1400,1600
!mptemp,,
! Conductivity scaled up by factor of 10 to account for convection
!mpdata,kxx,14, 1, 8.700E-3, 1.092E-2, 1.159E-2, 1.234E-2, 1.297E-2, 1.483E-2
!mpdata,kxx,14, 7, 1.661E-2, 1.833E-2, 2.001E-2, 2.163E-2, 2.469E-2, 2.769E-2
!mpdata,kxx,14,13, 3.060E-2, 3.331E-2, 3.631E-2
! - 15 - axial payload contactgap (air) -------------------------------------
MPCOPY,,1,15
TBCOPY,all,1,15
! -- Closure Lid Seal (Neoprene/Chloroprene Rubber) ---------------------------
! https://www.makeitfrom.com/material-properties/Chloroprene-Rubber-CR-Neoprene
mptemp,,
mp,c ,16,.27        ! lb/in^3
```

```
mp, kxx,16,0.0167    ! Btu/(h-in-F)
mp,dens,16,0.069     ! lb/in^3
! - 51, 52 - shells to be deleted ----------------------------------------
mpcopy,  ,2,51
tbcopy,all,2,51
mpcopy,  ,2,52
tbcopy,all,2,52
mpcopy,  ,2,53
tbcopy,all,2,53
mpcopy,  ,2,54
tbcopy,all,2,54
mpcopy,  ,2,55
tbcopy,all,2,55
mpcopy,  ,2,56
tbcopy,all,2,56
mpcopy,  ,2,57
tbcopy,all,2,57
! -- finish ------------------------------------------------------------
! ------------------------------------------------------------------------
```

4.0 CONTAINMENT

The OP-RMSC package is designed as a confinement boundary for raw material special form source capsules. Containment of radioactive material is provided by the special form construction of the payloads. The DOT-IAEA Certification Number for one raw material special form capsule that would be transported in OP-RMSC is as follows:

Manufacture	Model Number	Certification Number
Industrial Nuclear Co., Inc.	INC-SFC-1*	USA/0798/S-96

** Limited to 4,000 Ci (148 TBq) of Ir-192 per capsule.*

Other raw material special form capsules may be transported in the OP-RMSC provided the capsules comply with the radioactive content limits specified in 1.2.2, *Contents of Packaging*.

Since the OP-RMSC package does not provide containment, subsequent sections of this chapter are not applicable.

5.0 SHIELDING EVALUATION

This section demonstrates the shielding capability of the OP-RMSC package design for the authorized special form contents. For the Ir-192 and Se-75 payloads, the shielding evaluation is demonstrated via prototypic testing in lieu of an analytical evaluation. For the Co-60 payload, a MCNP shielding model was created to perform the shielding evaluation of a 1 Ci (0.04 TBq) source in order to determine the maximum Curie content for the RMSC payload.

5.1 Description of Shielding Design

5.1.1 Design Features

The OP-RMSC package is a welded stainless steel structure that contains the RMSC payload, which contains the tungsten gamma shields and the radioactive content. Four (4) stainless steel raw material special form capsules, which each contain a maximum of 4,000 Ci (148 TBq) of Ir-192 or Se-75 isotope, are placed in the cavity of the RMSC payload. For the Co-60 isotope payload, a maximum total of 2 Ci (0.07 TBq) in special form may be placed in the RMSC cavity. The RMSC payload cavity that is surrounded by the tungsten gamma shields provides the maximum attenuation of the gamma radiation.

5.1.2 Summary Table of Maximum Radiation Levels

Table 5.1-1 provides the maximum measured external radiation levels for the RMSC payload with the maximum payload content of Ir-192 (16,000 Ci [592 TBq]) for a non–exclusive use shipment. Table 5.1-2 provides the maximum calculated external radiation levels for the maximum payload content of Co-60 (2 Ci [0.07 TBq]) for a non-exclusive use shipment.

Table 5.1-1 – Maximum Measured External Radiation Levels for Ir-192 (Non–Exclusive Use)

Measurement Location	Normal Conditions of Transport		Hypothetical Accident Conditions	
	Measured* mrem/hr (mSv/hr)	10 CFR §71.47(a) Limit mrem/hr (mSv/hr)	Measured mrem/hr (mSv/hr)	10 CFR §71.51(a)(2) Limit mrem/hr (mSv/hr)
Surface	123 (1.2)	200 (2)	N/A	N/A
40 inches (1 Meter) from Surface	3 (0.0)	10 (0.1)	4 (0.0)	1000 (10)

* Note: Normal condition maximum measured values are for CTU-2 and are adjusted to account for the maximum 16,000 Ci (592 TBq) radioactive content. Measurements were performed post-test following the hypothetical accident conditions tests per 10 CFR §71.73.

Table 5.1-2 – Maximum Calculated External Radiation Levels for Co-60 (Non–Exclusive Use)

Package Location	Normal Conditions of Transport		Hypothetical Accident Conditions	
	Calculated mrem/hr (mSv/hr)	10 CFR §71.47(a) Limit mrem/hr (mSv/hr)	Calculated mrem/hr (mSv/hr)	10 CFR §71.51(a)(2) Limit mrem/hr (mSv/hr)
Surface	198 (2.0)	200 (2)	N/A	N/A
40 inches (1 Meter) from Surface	2 (0.0)	10 (0.1)	2 (0.0)	1000 (10)

5.2 Source Specification

5.2.1 Gamma Source

The radioactive content of the OP-RMSC package is limited to either 2 Ci (0.07 TBq) of Co-60, or 16,000 Ci (592 TBq) of Ir-192 or Se-75 isotopes. Since the photon energy of Ir-192 (0.380 MeV average) is greater than Se-75 (0.280 MeV average), Ir-192 results in a higher unit dose than Se-75 per curie of activity, as tabulated in Table 5.2-1. Therefore, the Ir-192 payload bounds Se-75 payload for the maximum 16,000 Ci (592 TBq) content. Because actual Ir-192 special form capsules are utilized to determine the acceptance of the tungsten gamma shields, the tabulation of gamma decay source strengths for the raw material special form capsules for Ir-192 or Se-75 is not required for the RMSC payload.

Table 5.2-1 – Specific Gamma Ray Constants for Raw Material Isotopes[12]

Radionuclide	Specific Gamma Ray Constant ($R\text{-}m^2/hr\text{-}Ci$)
Iridium-192	0.460
Selenium-75	0.203

The Co-60 gamma spectrum is presented in Table 5.2-1. The Co-60 gamma spectrum is extracted from ORIGEN discrete gamma data file *origen.rev04.mpdxgam*, which is included with SCALE 6.2.1[13]. *ORIGEN decay data is based on ENDF/B-VII.1 evaluations. The total* gamma source strength, S, is calculated as a function of the average gammas per decay, $\Sigma P(\gamma)$, and the isotopic activity, A. One Curie of Co-60 results in 7.3948 x 10^{10} gammas/sec, as shown:

$$S = \sum P(\gamma) \times A = \left(1.9986 \frac{\gamma}{decay}\right) \times \left(1\ Ci \times \frac{3.7 \times 10^{10} \frac{decay}{sec}}{Ci}\right) = 7.3948 \times 10^{10} \frac{\gamma}{sec}$$

5.2.1 Neutron Source

This section does not apply, since the OP-RMSC package does not contain neutron sources.

[12] "Exposure Rate Constants and Lead Shielding Values for Over 1,100 Radionuclides", David S. Smith and Michael G. Stabin, Department of Radiology and Radiological Sciences, Vanderbilt University, Nashville, TN, Health Physics Society Journal, March 2012 issue.

[13] "ORNL/TM-2005/39, *SCALE Code System*, Oak Ridge National Laboratory, Version 6.2.1, August 2016, RSICC Package ID C00834MNYCP02.

Table 5.2-2 – Co-60 Discrete Gamma Spectrum

Gamma Energy (MeV)	Probability of Gamma per Isotope Decay
7.5100E-04	1.6946E-06
8.5234E-04	8.0550E-07
8.7689E-04	1.3826E-08
8.8364E-04	5.6638E-07
7.4178E-03	3.1894E-05
7.4358E-03	6.2286E-05
8.2223E-03	3.9005E-06
8.2246E-03	7.6481E-06
8.2879E-03	3.3435E-09
8.2881E-03	4.8594E-09
3.4714E-01	7.5000E-05
8.2610E-01	7.6000E-05
1.1732E+00	9.9850E-01
1.3325E+00	9.9983E-01
2.1586E+00	1.2000E-05
2.5057E+00	2.0000E-08

5.3 Shielding Model

5.3.1 Configuration of Source and Shielding

The shielding capability of the RMSC payload for the OP-RMSC package design is primarily demonstrated by physical tests of prototypic packages for the maximum Curie content for the Ir-192 isotope. For the 2 Ci (0.07 TBq) of Co-60 isotope payload, a MCNP model was created, and utilized to demonstrate the shielding capability of the RMSC payload. All relevant design features of the RMSC payload were modeled in MCNP. The model for the RMSC payload is shown in Figures 5.3-1 and 5.3-2.

The Co-60 source is concentrated within a single special form capsule located against the payload cavity radial wall. The source is modeled as a homogenous cylinder filling the capsule, with no credit taken for the source material.

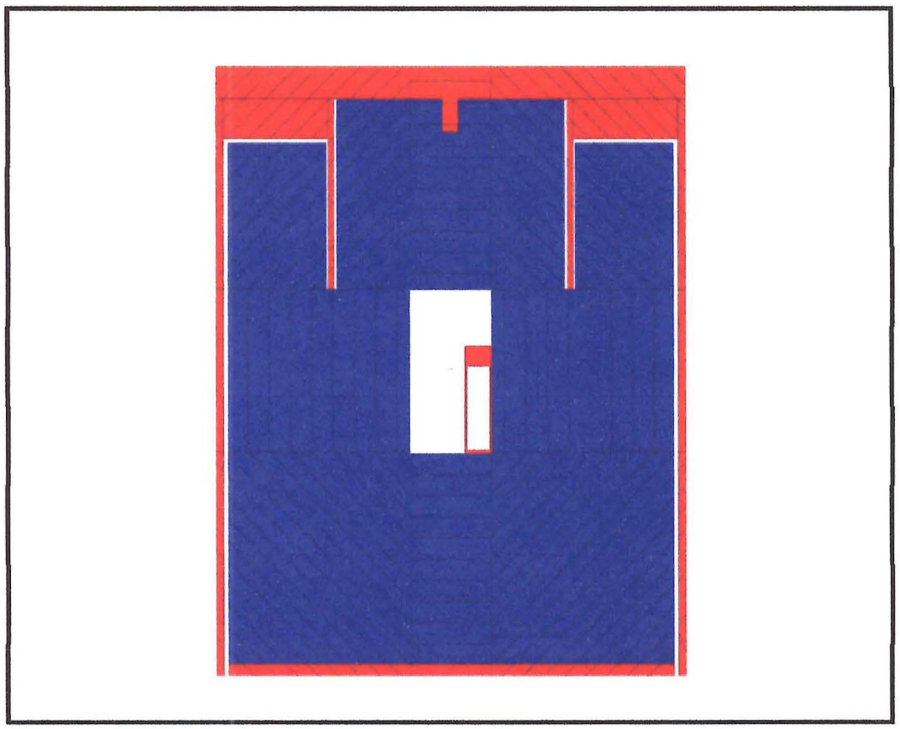

Figure 5.3-1 – RMSC Payload, MCNP Model Axial Cross-Section

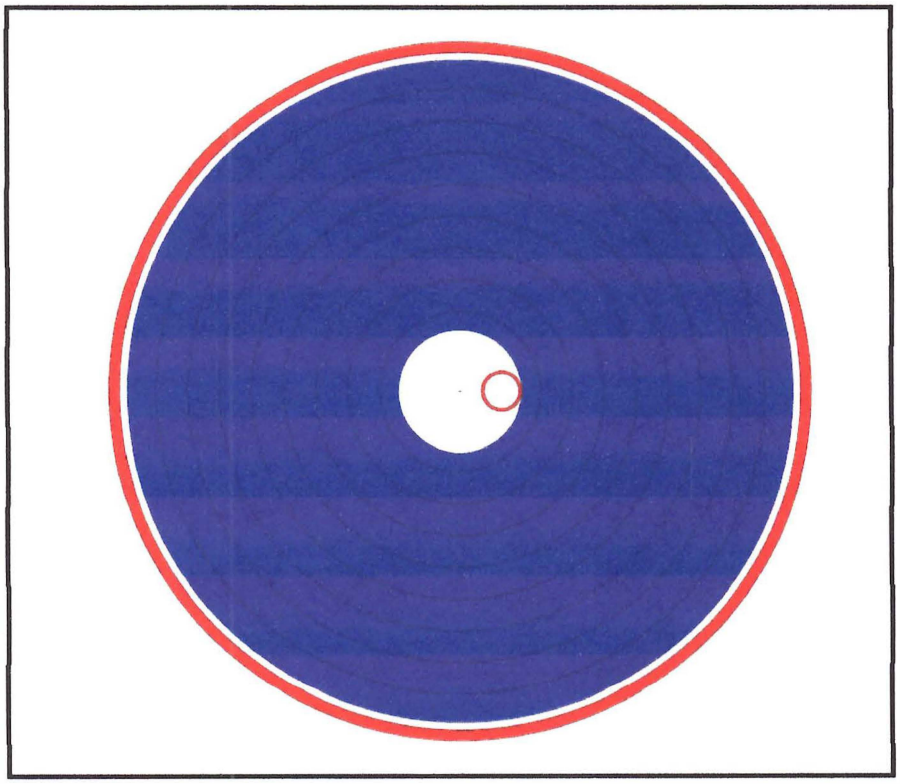

Figure 5.3-2 – RMSC Payload, MCNP Model Radial Cross-Section

5.3.2 Material Properties

The RMSC payload is constructed of stainless steel and tungsten alloy. The stainless steel composition utilized in the MCNP models is tabulated in Table 5.4-1. The tungsten alloy is Densimet® 176 (tungsten cavity shield) and Densimet® 185 (tungsten body shield), with the product numbers corresponding to densities of 17.6 g/cm³ and 18.5 g/cm³, respectively. The Densimet® alloys[14] are predominantly tungsten with trace amounts of nickel and iron (3-7%). The alloy is modeled as 93 wt.% tungsten with equal parts nickel and iron (3.5 wt.% each). The tungsten alloy composition is tabulated in Table 5.3-2.

Table 5.3-1 – Type 304 Stainless Steel Composition (Density = 8.00 g/cm³)[15]

Element	ZAID	Weight Fraction
C	6000	0.000400
Si	14000	0.005000
P	15000	0.000230
S	16000	0.000150
Cr	24000	0.190000
Mn	25000	0.010000
Fe	26000	0.701730
Ni	28000	0.092500

Table 5.3-2 – Densimet® Composition (Density = 17.6 g/cm³ or 18.5 g/cm³)

Element	ZAID	Weight Fraction
Fe	26000	0.035
Ni	28000	0.035
W	74000	0.035

5.4 Shielding Evaluation

5.4.1 Methods

The method utilized to demonstrate the shielding performance of the OP-RMSC package for the Ir-192 and Se-75 isotopes is primarily via prototypic testing utilizing special form capsules containing radioactive Ir-192 material, which bounds the Se-75 isotope.

For the Co-60 isotope, a shielding model utilized MCNP6.2 and ENDF/B-V1.8 photon cross-section was developed in order to determine the maximum regulatory dose rates. The model was analyzed in two separate runs, with the special form capsule shifted up or down to determine the maximum dose rates. The NCT and HAC cases were evaluated in the same model

[14] "Plansee Product Data, *Tungsten heavy alloys*, https://www.plansee.com/en/materials/tungsten-heavy-metal.html.

[15] "PNNL-15870, *Compendium of Material Composition Data for Radiation Transport Modeling*, Pacific Northwest National Laboratory, Revision 1, March 2011.

since there was no damage or change in configuration to the RMSC payload from the HAC free and puncture drop tests, as noted in Section 2.7.8, *Summary of Damage*.

5.4.2 Input and Output Data

For the MCNP model, the key dimensions relevant to the modeled container and a typical special form capsule are summarized in Table 5.4-1 and Table 5.4-2, respectively. Drawing tolerances are applied to all dimensions such that the tungsten shielding material is minimized. Pipe tolerances were extracted from the ASTM specification identified on the drawings in Appendix 1.3.1, *General Arrangement Drawings*.

A sample of the MCNP input file is provided Appendix 5.5.1, *Sample MCNP Input File (RMSC_Co60_up.i)*.

Table 5.4-1 – RMSC Key Model Dimensions

Item	Dimension (in)
Payload Cavity Diameter	1.52
Side Tungsten Outer Diameter	8.18
Body Shell Pipe Outer Diameter	8.63
Body Shell Pipe Wall Thickness	0.13
Bottom Tungsten Thickness	3.91
Bottom Plate Thickness	0.22
Cavity Shield Tungsten Thickness	3.53
Lid Top Plate Thickness	0.60

Table 5.4-2 – Special Form Capsule Key Model Dimensions

Item	Dimension (in)
Inner Diameter	0.429
Outer Diameter	0.495
Cap Thickness	0.370
Bottom Thickness	0.060
Source Height	1.565

5.4.3 Flux-to-Dose-Rate Conversions

ANSI/ANS-6.1.1-1977[16] photon flux-to-dose rate conversion factors were utilized in this analysis for the Co-60 payload. The conversion factors in the ANIS/ANS reference have been multiplied by a factor of 1000 to generate dose rates in units of mrem/hr rather than rem/hr. The conversion factors are provided in Table 5.4-1.

[16] "ANSI/ANS-6.1.1-1977, *American National Standard Neutron and Gamma-Ray Flux-to-Dose-Rate Factors*, March 1977.

Table 5.4-1 – ANSI/ANS-6.1.1-1977 Photon Flux-to-Dose Rate Conversion Factors

Energy, E (MeV)	DF(E) (mrem/hr)/(γ/cm^2-s)
0.01	3.96E-03
0.03	5.82E-04
0.05	2.90E-04
0.07	2.58E-04
0.10	2.83E-04
0.15	3.79E-04
0.20	5.01E-04
0.25	6.31E-04
0.30	7.59E-04
0.35	8.78E-04
0.40	9.85E-04
0.45	1.08E-03
0.50	1.17E-03
0.55	1.27E-03
0.60	1.36E-03
0.65	1.44E-03
0.70	1.52E-03
0.80	1.68E-03
1.00	1.98E-03

Energy, E (MeV)	DF(E) (mrem/hr)/(γ/cm2-s)
1.40	2.51E-03
1.80	2.99E-03
2.20	3.42E-03
2.60	3.82E-03
2.80	4.01E-03
3.25	4.41E-03
3.75	4.83E-03
4.25	5.23E-03
4.75	5.60E-03
5.00	5.80E-03
5.25	6.01E-03
5.75	6.37E-03
6.25	6.74E-03
6.75	7.11E-03
7.50	7.66E-03
9.00	8.77E-03
11.00	1.03E-02
13.00	1.18E-02
15.00	1.33E-02

5.4.4 External Radiation Levels

Following the specified tests of a prototypic package with 16,000 Ci (592 TBq) of Ir-192 payload per 2.6, *Normal Conditions of Transport*, and 2.7, *Hypothetical Accident Conditions*, the adjusted maximum measured radiation level on the surface and at 1-meter of the RMSC payloads is 123 mrem/hr (1.23 mSv/hr) and 2 mrem/hr (0.0 mSv/hr), respectively. As noted in Table 5.1-1, these levels are below the regulatory limits of 10 CFR §71.47(a) and 10 CFR §71.51(a)(2).

For the Co-60 payload, the MCNP tallies were subdivided into sub-tallies to ensure all local maximum dose rates are properly captured. All side tallies were vertically segmented into ~0.4 inch (~1 cm) subdivisions. Similarly, top and bottom tallies were radially segmented into ~0.4 inch (~1 cm) subdivisions. At 1 meter, for mesh locations away from the expected maximum dose rate locations (i.e., along package diagonals), larger subdivisions (~4 inch/~10 cm, either axially or radially) were utilized. All mesh tallies were rotationally segmented into four 90° subdivisions.

For NCT, surface dose rates were captured using three mesh tallies at the following locations: top surface, side surface, and bottom surface. For NCT and HAC, the 1-meter dose rates were captured using the same three mesh tallies at similar locations: 1 meter from top surface, 1 meter from side surface, and 1 meter from bottom surface.

The maximum dose rates for each location resulting from a 1 Ci Co-60 source are tabulated in Table 5.4-2. *Based on the resulting dose rates, the maximum possible Co-60 source strength that* can be shipped in the RMSC is 2.1 Ci. However, the maximum allowable source strength is set at 2 Ci for the OP-RMSC package for operational reasons.

Table 5.4-2 – Tally Maximum Dose Rates, 1 Ci Co-60

Location	Capsule Position	Dose Rate (mrem/hr)	Relative Error	Max Curies until Limit
NCT, Top Surface	Up	38.3	0.2%	5.2
NCT, Side Surface	Up	**99.0**	0.2%	**2.0**
NCT, Bottom Surface, Bottom	Down	16.5	0.1%	12.1
NCT/HAC, Top at 1 meter	Up	0.4	5.7%	23.9
NCT/HAC, Side at 1 meter	Up	0.8	0.8%	13.2
NCT/HAC, Bottom at 1 meter	Down	0.1	4.7%	71.1

5.5 Appendix

5.5.1 Sample MCNP Input File (RMSC_Co60_up.i)

```
INC RMSC, Co-60 Source
c *** Cell Cards ***
c ===== RMSC
 1   2 -8.00   1 -2 -3                      imp:p=1 fill=12
 2   1 -18.5   2 -5 -3 (-6:9) (-7:8)        imp:p=1 fill=11
 3   1 -17.6   6 -11 -12 (-13:14)           imp:p=1 fill=13
 4   2 -8.00   6 -11 17 -16                 imp:p=1 fill=12
 5   2 -8.00   1 -11 19 -18                 imp:p=1 fill=12
 6   2 -8.00   21 -11 16 -19                imp:p=1 fill=12
 7   2 -8.00  (11 -23 -18):(13 -11 -14)     imp:p=1 fill=12
 8   0        (1 -21 3 -19):
              (5 -21 16 -3):
              (6 -5 16 -9):
              (6 -11 12 -17)                imp:p=1
 9   0         7 -6 -8                      imp:p=1 fill=1 (1.3 0 2.54)
c
c ===== Source Capsule
11   2 -8.00   25 -26 -29 (-27:31:28)       imp:p=1 u=1
12   0         27 -31 -28                   imp:p=1 u=1
13   0         -25:26:29                    imp:p=1 u=1
c
c ===== Problem Boundary
98   0        (-1:23:18) -33                imp:p=1
99   0         33                           imp:p=0
c
c ===== Importance Splitting
c Down
101  1 -18.5   -80 101 -70          u=11 imp:p=1.00e+00
102  1 -18.5   -80 102 -101         u=11 imp:p=4.65e+00
103  1 -18.5   -80 103 -102         u=11 imp:p=1.62e+01
104  1 -18.5   -80 104 -103         u=11 imp:p=5.29e+01
105  1 -18.5   -80 105 -104         u=11 imp:p=1.69e+02
106  1 -18.5   -80 106 -105         u=11 imp:p=5.27e+02
107  1 -18.5   -80 107 -106         u=11 imp:p=1.60e+03
108  1 -18.5   -80 108 -107         u=11 imp:p=4.56e+03
109  1 -18.5   -80 109 -108         u=11 imp:p=1.35e+04
110  1 -18.5   -80     -109         u=11 imp:p=4.51e+04
c
111  2 -8.00   -80     -109         u=12 imp:p=1.90e+05
c
c Side
201  1 -18.5   70 -60 -201          u=11 imp:p=1.00e+00
202  1 -18.5   70 -60 -202 201      u=11 imp:p=1.66e+00
203  1 -18.5   70 -60 -203 202      u=11 imp:p=4.46e+00
204  1 -18.5   70 -60 -204 203      u=11 imp:p=1.19e+01
205  1 -18.5   70 -60 -205 204      u=11 imp:p=3.15e+01
206  1 -18.5   70 -60 -206 205      u=11 imp:p=8.45e+01
207  1 -18.5   70 -60 -207 206      u=11 imp:p=2.28e+02
208  1 -18.5   70 -60 -208 207      u=11 imp:p=5.99e+02
209  1 -18.5   70 -60      208      u=11 imp:p=1.63e+03
c
210  2 -8.00   70 -60               u=12 imp:p=3.92e+03
c
c Down Diagonal
301  1 -18.5   80 -70 -301          u=11 imp:p=1.00e+00
302  1 -18.5   80 -70 -302 301      u=11 imp:p=1.00e+00
303  1 -18.5   80 -70 -303 302      u=11 imp:p=1.43e+00
304  1 -18.5   80 -70 -304 303      u=11 imp:p=2.36e+00
305  1 -18.5   80 -70 -305 304      u=11 imp:p=4.16e+00
306  1 -18.5   80 -70 -306 305      u=11 imp:p=7.63e+00
```

```
307  1 -18.5   80 -70 -307 306     u=11 imp:p=1.43e+01
308  1 -18.5   80 -70 -308 307     u=11 imp:p=2.70e+01
309  1 -18.5   80 -70 -309 308     u=11 imp:p=5.23e+01
310  1 -18.5   80 -70 -310 309     u=11 imp:p=1.00e+02
311  1 -18.5   80 -70 -311 310     u=11 imp:p=2.01e+02
312  1 -18.5   80 -70 -312 311     u=11 imp:p=4.07e+02
313  1 -18.5   80 -70 -313 312     u=11 imp:p=8.62e+02
314  1 -18.5   80 -70 -314 313     u=11 imp:p=1.77e+03
315  1 -18.5   80 -70 -315 314     u=11 imp:p=4.03e+03
316  1 -18.5   80 -70 -316 315     u=11 imp:p=8.06e+03
317  1 -18.5   80 -70 -317 316     u=11 imp:p=1.93e+04
318  1 -18.5   80 -70 -318 317     u=11 imp:p=5.46e+04
319  1 -18.5   80 -70      318     u=11 imp:p=1.64e+05
c
410  2 -8.00   80 -70 -310 309     u=12 imp:p=1.00e+02
411  2 -8.00   80 -70 -311 310     u=12 imp:p=2.01e+02
412  2 -8.00   80 -70 -312 311     u=12 imp:p=4.07e+02
413  2 -8.00   80 -70 -313 312     u=12 imp:p=8.62e+02
414  2 -8.00   80 -70 -314 313     u=12 imp:p=1.77e+03
415  2 -8.00   80 -70 -315 314     u=12 imp:p=4.03e+03
416  2 -8.00   80 -70 -316 315     u=12 imp:p=8.06e+03
417  2 -8.00   80 -70 -317 316     u=12 imp:p=1.93e+04
418  2 -8.00   80 -70 -318 317     u=12 imp:p=5.46e+04
419  2 -8.00   80 -70      318     u=12 imp:p=1.64e+05
c
c Up
501  1 -17.6   -80 -501            u=13 imp:p=1.00e+00
502  1 -17.6   -80 -502 501        u=13 imp:p=2.21e+00
503  1 -17.6   -80 -503 502        u=13 imp:p=6.32e+00
504  1 -17.6   -80 -504 503        u=13 imp:p=1.79e+01
505  1 -17.6   -80 -505 504        u=13 imp:p=5.02e+01
506  1 -17.6   -80 -506 505        u=13 imp:p=1.40e+02
507  1 -17.6   -80 -507 506        u=13 imp:p=3.90e+02
508  1 -17.6   -80 -508 507        u=13 imp:p=1.13e+03
509  1 -17.6   -80 -509 508        u=13 imp:p=2.91e+03
510  1 -17.6   -80      509        u=13 imp:p=8.73e+03
c
511  2 -8.00   -80 -510 509        u=12 imp:p=1.15e+04
512  2 -8.00   -80      510        u=12 imp:p=1.42e+04
c
609  2 -8.00   -80 -508 109        u=12 imp:p=2.91e+03
610  2 -8.00   -80 -509 508        u=12 imp:p=8.73e+03
c
c Up Diagonal
701  1 -17.6   80 -701             u=13 imp:p=1.00e+00
702  1 -17.6   80 -702 701         u=13 imp:p=1.00e+00
703  1 -17.6   80 -703 702         u=13 imp:p=1.28e+00
704  1 -17.6   80 -704 703         u=13 imp:p=1.95e+00
705  1 -17.6   80 -705 704         u=13 imp:p=3.00e+00
706  1 -17.6   80 -706 705         u=13 imp:p=4.77e+00
707  1 -17.6   80 -707 706         u=13 imp:p=8.18e+00
708  1 -17.6   80 -708 707         u=13 imp:p=1.40e+01
709  1 -17.6   80 -709 708         u=13 imp:p=2.47e+01
710  1 -17.6   80 -710 709         u=13 imp:p=4.35e+01
711  1 -17.6   80 -711 710         u=13 imp:p=8.00e+01
712  1 -17.6   80 -712 711         u=13 imp:p=1.48e+02
713  1 -17.6   80 -713 712         u=13 imp:p=2.99e+02
c
714  2 -8.00   80 -714 713         u=12 imp:p=4.96e+02
715  2 -8.00   80 -715 714         u=12 imp:p=7.98e+02
716  2 -8.00   80 -716 715         u=12 imp:p=1.22e+03
717  2 -8.00   80 -717 716         u=12 imp:p=1.92e+03
718  2 -8.00   80 -718 717         u=12 imp:p=3.17e+03
719  2 -8.00   80 -719 718         u=12 imp:p=6.60e+03
720  2 -8.00   80      719         u=12 imp:p=2.11e+04
c
```

```
805  2 -8.00   80 60 -705          u=12 imp:p=3.00e+00
806  2 -8.00   80 60 -706 705      u=12 imp:p=4.77e+00
807  2 -8.00   80 60 -707 706      u=12 imp:p=8.18e+00
808  2 -8.00   80 60 -708 707      u=12 imp:p=1.40e+01
809  2 -8.00   80 60 -709 708      u=12 imp:p=2.47e+01
810  2 -8.00   80 60 -710 709      u=12 imp:p=4.35e+01
811  2 -8.00   80 60 -711 710      u=12 imp:p=8.00e+01
812  2 -8.00   80 60 -712 711      u=12 imp:p=1.48e+02
813  2 -8.00   80 60 -713 712      u=12 imp:p=2.99e+02
c
905  1 -18.5   80 60 -705          u=11 imp:p=3.00e+00
906  1 -18.5   80 60 -706 705      u=11 imp:p=4.77e+00
907  1 -18.5   80 60 -707 706      u=11 imp:p=8.18e+00
908  1 -18.5   80 60 -708 707      u=11 imp:p=1.40e+01
909  1 -18.5   80 60 -709 708      u=11 imp:p=2.47e+01
910  1 -18.5   80 60 -710 709      u=11 imp:p=4.35e+01
911  1 -18.5   80 60 -711 710      u=11 imp:p=8.00e+01
912  1 -18.5   80 60 -712 711      u=11 imp:p=1.48e+02
913  1 -18.5   80 60 -713 712      u=11 imp:p=2.99e+02
914  1 -18.5   80 60 -714 713      u=11 imp:p=4.96e+02
915  1 -18.5   80 60 -715 714      u=11 imp:p=7.98e+02
916  1 -18.5   80 60      715      u=11 imp:p=1.22e+03

c *** Surface Cards ***
c ===== RMSC
c Body Shell Bottom Plate
 1 pz  0
 2 pz  0.5588        $ 0.25" (-0.03") height
 3 cz 10.3886        $ 8.20" (-0.02") diameter, match tungsten diameter for simplicity
c
c Tungsten Body Shield
 5 pz 25.146         $ 9.70" (-0.02") height
 6 pz 18.2118        $ 2.75" (-0.02") shield plug height
 7 pz 10.4902        $ 5.75" (+0.02") shield plug and cavity height
 8 cz  1.9304        $ 1.50" (+0.02") cavity diameter
 9 cz  5.8166        $ 4.60" (-0.02") shield plug diameter
c
c Tungsten Cavity Shield Plug
11 pz 27.178         $ 3.55" (-0.02") height
12 cz  5.3086        $ 4.20" (-0.02") diameter
13 pz 25.654         $ 0.6" depth screw hole
14 cz  0.396875      $ 0.3125" diameter (5/16-18 UNC major diameter)
c
c Body Upper Center and Outer Shell Pipes
16 cz  5.715         $ 4.5" outer diameter, 4" Schedule 10S
17 cz  5.4483        $ 0.120" (-12.5%) wall thickness
18 cz 10.95375       $ 8.625" outer diameter, 8" Schedule 10S
19 cz 10.62482       $ 0.148" (-12.5%) wall thickness
c
c Body Top Plate
21 pz 25.3492        $ 0.75" (-0.03") thick
c
c Lid Top Plate
23 pz 28.702         $ 0.63" (-0.03") thick
c
c ===== Source Capsule
c Special Form Capsule
25 pz 10.6
26 pz 15.6673        $ 2.000" (-0.005") height
27 pz 10.7524        $ 1.930" (+0.005") from top
28 cz  0.54483       $ 0.429" (+0.000") inner diameter
29 cz  0.62865       $ 0.500" (-0.005") outer diameter
c
c Special Form Capsule Plug
31 pz 14.7275        $ 0.375" (-0.005") height
c
```

```
c ===== Problem Boundary
33 so 1000
c
c ===== Importance Splitting
c Offset surfaces to avoid chaining
60 pz 18.2119
70 pz 10.5919
80 cz  1.8797
c
c Down
101 pz 9.5
102 pz 8.5
103 pz 7.5
104 pz 6.5
105 pz 5.5
106 pz 4.5
107 pz 3.5
108 pz 2.5
109 pz 1.5
c
c Side
201 cz 2.5
202 cz 3.5
203 cz 4.5
204 cz 5.5
205 cz 6.5
206 cz 7.5
207 cz 8.5
208 cz 9.5
c
c Down Diagonal
301 z  9.5 1.8796 10.5918  2.5
302 z  8.5 1.8796 10.5918  3.5
303 z  7.5 1.8796 10.5918  4.5
304 z  6.5 1.8796 10.5918  5.5
305 z  5.5 1.8796 10.5918  6.5
306 z  4.5 1.8796 10.5918  7.5
307 z  3.5 1.8796 10.5918  8.5
308 z  2.5 1.8796 10.5918  9.5
309 z  1.5 1.8796 10.5918 10.5
310 z  0.5 1.8796 10.5918 11.5
311 z -0.5 1.8796 10.5918 12.5
312 z -1.5 1.8796 10.5918 13.5
313 z -2.5 1.8796 10.5918 14.5
314 z -3.5 1.8796 10.5918 15.5
315 z -4.5 1.8796 10.5918 16.5
316 z -5.5 1.8796 10.5918 17.5
317 z -6.5 1.8796 10.5918 18.5
318 z -7.5 1.8796 10.5918 19.5
c
c Up
501 pz 19
502 pz 20
503 pz 21
504 pz 22
505 pz 23
506 pz 24
507 pz 25
508 pz 26
509 pz 27
510 pz 28
c
c Up Diagonal
701 z 19 1.8796 18.2118  2.5
702 z 20 1.8796 18.2118  3.5
703 z 21 1.8796 18.2118  4.5
```

```
704 z 22 1.8796 18.2118  5.5
705 z 23 1.8796 18.2118  6.5
706 z 24 1.8796 18.2118  7.5
707 z 25 1.8796 18.2118  8.5
708 z 26 1.8796 18.2118  9.5
709 z 27 1.8796 18.2118 10.5
710 z 28 1.8796 18.2118 11.5
711 z 29 1.8796 18.2118 12.5
712 z 30 1.8796 18.2118 13.5
713 z 31 1.8796 18.2118 14.5
714 z 32 1.8796 18.2118 15.5
715 z 33 1.8796 18.2118 16.5
716 z 34 1.8796 18.2118 17.5
717 z 35 1.8796 18.2118 18.5
718 z 36 1.8796 18.2118 19.5
719 z 37 1.8796 18.2118 20.5

c *** Data Cards ***
c ===== Materials
c ================================================
c Densimet Tungsten Alloy
c Density = 17.6 or 18.5 g/cm^3
c Reference: Supplier product sheet
c ================================================
m1      26000   -0.035
        28000   -0.035
        74000   -0.930
c ================================================
c Stainless Steel 304
c Density = 8.00 g/cm^3
c Reference: PNNL-15870 Rev. 1
c ================================================
m2       6000   -0.000400
        14000   -0.005000
        15000   -0.000230
        16000   -0.000150
        24000   -0.190000
        25000   -0.010000
        26000   -0.701730
        28000   -0.092500
c
c ===== Source Definition
sdef par=p  cel=d1 pos=0 0 10.7524
     rad=d2 ext=d3 axs=0 0 1
     erg=d4 wgt=7.3948e10
     dir=d5 vec=0 0 1
c
si1 L (12<9)
sp1 D 1
c
si2 H 0 0.54483
sp2 D -21 1
c
si3 H 0 3.9751
sp3 D 0 1
c
c Energy distribution taken from SCALE 6.2.1. discrete gamma data
#       si4             sp4
         L               D
      7.5100e-04     1.6946e-06
      8.5234e-04     8.055e-07
      8.7689e-04     1.3826e-08
      8.8364e-04     5.6638e-07
      7.4178e-03     3.1894e-05
      7.4358e-03     6.2286e-05
      8.2223e-03     3.9005e-06
```

```
      8.2246e-03    7.6481e-06
      8.2879e-03    3.3435e-09
      8.2881e-03    4.8594e-09
      3.4714e-01    7.5e-05
      8.2610e-01    7.6e-05
      1.1732e+00    0.9985
      1.3325e+00    0.99983
      2.1586e+00    1.2e-05
      2.5057e+00    2e-08
c
c Source directionality (biasing only), 10 deg increments
#        si5            sp5            sb5
          A              D              D
       -1.000            1              100
       -0.985            1              50
       -0.940            1              25
       -0.866            1              12
       -0.766            1              1
       -0.643            1              1
       -0.500            1              1
       -0.342            1              1
       -0.174            1              1
        0.000            1              1
        0.174            1              1
        0.342            1              1
        0.500            1              1
        0.643            1              1
        0.766            1              1
        0.866            1              12
        0.940            1              25
        0.985            1              50
        1.000            1              100
c
c ===== Dose Tallies
c ANSI/ANS-6.1.1-1977 Flux-to-Dose Rate, Photons, (mrem/hr)/(p/cm**2/s)
de0         0.01   0.03   0.05   0.07   0.10   0.15   0.20   0.25   0.30
            0.35   0.40   0.45   0.50   0.55   0.60   0.65   0.70   0.80
            1.00   1.40   1.80   2.20   2.60   2.80   3.25   3.75   4.25
            4.75   5.00   5.25   5.75   6.25   6.75   7.50   9.00   11.0
            13.0   15.0
df0         3.96-3 5.82-4 2.90-4 2.58-4 2.83-4 3.79-4 5.01-4 6.31-4 7.59-4
            8.78-4 9.85-4 1.08-3 1.17-3 1.27-3 1.36-3 1.44-3 1.52-3 1.68-3
            1.98-3 2.51-3 2.99-3 3.42-3 3.82-3 4.01-3 4.41-3 4.83-3 5.23-3
            5.60-3 5.80-3 6.01-3 6.37-3 6.74-3 7.11-3 7.66-3 8.77-3 1.03-2
            1.18-2 1.33-2
c
fc104 Top Surface Tally
fmesh104:p geom=cyl origin=0 0 28.702 axs=0 0 1 vec=-1 1 0
     imesh=10.95375 iints=11
     jmesh=1        jints=1
     kmesh=1        kints=4
c
fc114 Side Surface Tally
fmesh114:p geom=cyl origin=0 0 0 axs=0 0 1 vec=-1 1 0
     imesh=10.95375 11.95375 iints=1 1
     jmesh=28.702   jints=29
     kmesh=1        kints=4
c
fc124 Bottom Surface Tally
fmesh124:p geom=cyl origin=0 0 -1 axs=0 0 1 vec=-1 1 0
     imesh=10.95375 iints=11
     jmesh=1        jints=1
     kmesh=1        kints=4
c
fc204 Top 1m Tally
fmesh204:p geom=cyl origin=0 0 128.702 axs=0 0 1 vec=-1 1 0
```

```
     imesh=10.95375 110.95375 iints=11 10
     jmesh=1        jints=1
     kmesh=1        kints=4
c
fc214 Side 1m Tally
fmesh214:p geom=cyl origin=0 0 -100 axs=0 0 1 vec=-1 1 0
     imesh=110.95375 111.95375 iints=1 1
     jmesh=100 128.702 228.702 jints=10 29 10
     kmesh=1        kints=4
c
fc224 Bottom 1m Tally
fmesh224:p geom=cyl origin=0 0 -101 axs=0 0 1 vec=-1 1 0
     imesh=10.95375 110.95375 iints=11 10
     jmesh=1        jints=1
     kmesh=1        kints=4
c
c fc444 DEBUG MESH
c fmesh444:p geom=xyz origin=-11 -11 0
c      imesh=11 iints=44
c      jmesh=11 jints=44
c      kmesh=29 kints=58
c
c ===== Run Options
mode p
prdmp 4e8 4e7 0 2 4e8
nps 4e8
rand gen=2 stride=152917123  $ Use larger period and stride
```

6.0 CRITICALITY EVALUATION

The OP-RMSC package does not transport fissile material; therefore, this section does not apply.

7.0 PACKAGE OPERATIONS

7.1 Package Loading

This section delineates the procedures for loading the RMSC payload into the OP-RMSC package. Hereafter, reference to specific OP-RMSC components may be found in Appendix 1.3.1, *General Arrangement Drawings*.

7.1.1 Preparation of the OP-RMSC for Loading

1) Visually inspect the OP-RMSC package for damage and/or missing parts.
2) Remove the eight (8) hex bolts/washers and the closure lid from the OP-RMSC package body.
3) Remove the eight (8) hex bolts/washers and the inner closure lid.
4) Attach appropriate rigging to the hoist ring and remove the RMSC from the OP-RMSC cavity.
5) Visually inspect the RMSC for damage and/or missing parts.

7.1.2 Loading the Special Form Contents into the RMSC

1) Loosen the six (6) hex bolts/washers so that they may be easily removed in a remote handling operation.
2) Place the RMSC in an appropriate hot cell or shielded cell.
3) Remove the six (6) hex bolts/washers. Using an appropriate lifting device, remove the closure lid from the RMSC body, and place it in a secure location in the cell.
4) Thread an appropriate lift device into the threaded hole in the cavity tungsten shield and remove it from the payload cavity. Store the tungsten shield in a secure location in the cell.
5) Insert up to four (4) raw material source capsules and holder into the RMSC cavity.
6) Re-install the cavity tungsten shield over the payload cavity. Remove the lifting device from the shield and place it in a secure location.
7) Install the closure lid and the hex bolts/washers. Tighten the hex bolts to a hand tight condition.
8) Remove the RMSC from the hot cell or shielded cell.
9) Survey the RMSC to ensure that the dose rate is within acceptable limits.
10) Tighten the six (6) closure lid hex bolts to 40 ±5 lb_f-ft torque.

7.1.3 Preparation for Transport

1) Attach appropriate rigging to the hoist ring, lift the RMSC payload and insert it into the OP-RMSC payload cavity. Remove the rigging from the hoist ring.
2) Install the inner lid and the eight (8) hex bolts/washers. Tighten the hex bolts to 80 ±5 lb_f-ft torque.
3) Install the closure lid and the eight (8) hex bolts/washers to the OP-RMSC package body. Tighten the closure lid bolts to 80 ±5 lb_f-ft torque.

4) Install a tamper-indicating seal (security wire/lead seals) to a pair of the closure lid bolts.
5) Install an appropriate lifting device into the 3/8-16 UNC threaded hole, lift and place the OP-RMSC package onto the transport skid. Secure the package utilizing nylon straps or other securement system.
6) Remove the lifting device from the threaded hole, and install a threaded fastener to prevent the hole from being utilized as a tie-down. Tighten the fastener to a snug-tight condition.
7) Monitor external radiation per the guidelines of 49 CFR §173.441[17].
8) Determine the shielding transport index for the loaded OP-RMSC package per the guidelines of 49 CFR §173.403.
9) Install the personnel barrier over the OP-RMSC package, and secure it to the transport skid with the fasteners.
10) Complete all necessary shipping papers in accordance with Subpart C of 49 CFR 172[18].
11) OP-RMSC package marking shall be in accordance with 10 CFR §71.85(c) and Subpart D of 49 CFR 172. Package labeling shall be in accordance with Subpart E of 49 CFR 172. Packaging placarding shall be in accordance with Subpart F of 49 CFR 172.

7.2 Package Unloading

This section delineates the procedures for unloading the RMSC payload from the OP-RMSC package. Hereafter, reference to specific OP-RMSC components may be found in Appendix 1.3.1, *General Arrangement Drawings*.

7.2.1 Receipt of OP-RMSC Package from Carrier

1) Remove the fasteners that secure the personnel barrier to the skid, and remove the barrier from the conveyance.
2) Remove the straps or system that secures the OP-RMSC package to the transport conveyance.
3) Monitor the external radiation to ensure that the OP-RMSC package was not damaged during shipment.
4) Remove the fastener from the 3/8-16 threaded hole, and install an appropriate lifting device.
5) Utilizing appropriate rigging equipment, lift the OP-RMSC package from the transport conveyance, and place in a secure position for unloading the RMSC payload.

7.2.2 Removal of Special Form Contents from the RMSC

1) Remove the tamper-indicating seals from the closure lid bolts.
2) Remove the closure lid bolts/washers and the closure lid.
3) Remove the inner closure lid bolts/washers and the inner closure lid.

[17] Title 49, Code of Federal Regulations, Part 173 (49 CFR 173), *Shippers-General Requirements for Shipments and Packagings*, 10-1-20 Edition.

[18] Title 49, Code of Federal Regulations, Part 172 (49 CFR 172), *Hazardous Materials Tables and Hazardous Communications Regulations*, 10-1-20 Edition.

4) Attach appropriate rigging to the hoist ring, lift the RMSC payload from the OP-RMSC cavity.
5) Perform a radiation survey and smear test of the RMSC payload to ensure the package is acceptable for unloading in a hot cell.
6) Loosen the six (6) hex bolts/washers so that they may be easily removed in a remote handling operation.
7) Place the RMSC payload in an appropriate hot cell or shielded cell.
8) Remove the six (6) hex bolts/washers. Using an appropriate lifting device, remove the closure lid from the RMSC body, and place it in a secure location in the cell.
9) Thread an appropriate lift device into the threaded hole in the cavity tungsten shield and remove it from the payload cavity. Store the tungsten shield in a secure location in the cell.
10) Utilizing appropriate remote handling tools, remove the raw material special form capsules and holder from the RMSC cavity, and place the capsules/holder in a secure location.
11) Install the closure lid and the hex bolts/washers. Tighten the hex bolts to a hand tight condition.
12) Remove the RMSC from the hot cell or shielded cell. Tighten the hex bolts to a snug-tight condition.
13) Perform a radiation survey and smear test of the RMSC payload to ensure the package is acceptable for loading into the OP-RMSC.
14) Attach appropriate rigging to the hoist ring, lift the RMSC payload and insert it into the OP-RMSC payload cavity. Remove the rigging from the hoist ring.
15) Install the inner closure lid and the eight (8) hex bolts/washers. Tighten the hex bolts to a snug-tight condition.
16) Install the closure lid and the eight (8) hex bolts/washers to the OP-RMSC package body. Tighten the closure lid bolts to a snug-tight condition.

7.3 Preparation of Empty OP-RMSC Package for Transport

Previously used and empty OP-RMSC packages shall be prepared and transported per the requirements of 49 CFR §173.428.

8.0 ACCEPTANCE TESTS AND MAINTENANCE PROGRAM

8.1 Acceptance Tests

Per the requirements of 10 CFR §71.85(c), this section discusses the inspections and tests to be performed prior to first use of the OP-RMSC package.

8.1.1 Visual Inspections and Measurements

All materials of construction for the OP-RMSC package shall be examined in accordance with the requirements delineated on the drawings in Appendix 1.3.1, *General Arrangement Drawings*, per the requirements of 10 CFR §71.85(a).

8.1.2 Weld Examinations

All OP-RMSC package welds shall be examined in accordance with the requirements delineated on the drawings in Appendix 1.3.1, *General Arrangement Drawings*, per the requirements of 10 CFR §71.85(a).

8.1.3 Structural and Pressure Tests

The OP-RMSC package does not contain any lifting/tie-down devices or pressure boundaries that require testing. Therefore, this section does not apply.

8.1.4 Leakage Tests

The OP-RMSC package does not contain any seals or containment boundaries that require leakage testing. Therefore, this section does not apply.

8.1.5 Component and Material Tests

The OP-RMSC package does not contain any additional components or materials that require acceptance testing. Therefore, this section does not apply.

8.1.6 Shielding Tests

A radiation profile shall be performed on each tungsten gamma shield assembly prior to being utilized in the fabrication of a RMSC payload. These measured survey results are ratioed to determine the expected radiation levels for the maximum authorize source strength of 16,000 Ci (592 TBq) for the Ir-192 isotope. Any radiation profile of a tungsten gamma shield that results in a dose rate that exceeds the requirements of 49 CFR §173.441 with the maximum authorized payload shall not be utilized in the manufacture of a RMSC payload.

8.1.7 Thermal Tests

The OP-RMSC package does not contain any thermal features or systems that require testing. Therefore, this section does not apply.

8.1.8 Miscellaneous Tests

There are no additional tests required to utilize the OP-RMSC package. Therefore, this section does not apply.

8.2 Maintenance Program

This section describes the maintenance program used to ensure continued performance of the OP-RMSC package.

8.2.1 Structural and Pressure Tests

The OP-RMSC package does not contain any lifting/tie-down devices or pressure boundaries that require load testing. Therefore, this section does not apply.

8.2.2 Leakage Tests

The OP-RMSC package does not contain any seals or containment boundaries that require testing. Therefore, this section does not apply.

8.2.3 Component and Material Tests

All threaded components shall be inspected quarterly for deformed or stripped threads. Damaged components shall be repaired or replaced prior to further use.

The silicone gasket on the inner closure lid shall be inspected quarterly for damage and/or excessive wear. A damaged gasket shall be replacement prior to further use.

8.2.4 Thermal Tests

No thermal tests are necessary to ensure continued performance of the OP-RMSC package.

8.2.5 Miscellaneous Tests – Shielding

Prior to each shipment, a radiation survey of the RMSC payload is performed to ensure that the radiation dose levels do not exceed the requirements of 49 CFR §173.441. This survey confirms that the tungsten gamma shields have maintained their shielding function.